SEDIMENT SAMPLING

CONTENTS

1.0 SCOPE AND APPLICATION*

2.0 METHOD SUMMARY*

3.0 SAMPLE PRESERVATION, CONTAINERS, HANDLING, AND STORAGE*

4.0 INTERFERENCES AND POTENTIAL PROBLEMS*

5.0 EQUIPMENT/APPARATUS*

6.0 REAGENTS

7.0 PROCEDURES

7.1 Preparation*
7.2 Sample Collection*

7.2.1 Sampling Surface Sediment with a Trowel or Scoop from Beneath a Shallow Aqueous Layer*
7.2.2 Sampling Surface Sediment with a Bucket Auger or Tube Auger from Beneath a Shallow Aqueous Layer*
7.2.3 Sampling Deep Sediment with a Bucket Auger or Tube Auger from Beneath a Shallow Aqueous Layer*
7.2.4 Sampling Surface Sediment with an Ekman or Ponar Dredge from Beneath a Shallow Aqueous Layer or in Deep Water*
7.2.5 Sampling Subsurface Sediment with a Coring Device from Beneath a Shallow Aqueous Layer*
7.2.6 VibraCore*

7.2.6.1 Intrusion
7.2.6.2 Extraction
7.2.6.3 Core Sampling
7.2.6.4 Packaging

7.2.7 Diver-Assisted Core Sampling (using S.C.U.B.A. or surface-supplied air)*

8.0 CALCULATIONS

9.0 QUALITY ASSURANCE/QUALITY CONTROL*

CONTENTS (cont)

10.0 DATA VALIDATION

11.0 HEALTH AND SAFETY*

12.0 REFERENCES

13.0 APPENDICES

A - Figures*

* These sections are affected by Revision 0.0.

SUPERSEDES: SOP #2016; Revision 0.0; 11/17/94; U.S. EPA Contract EP-W-09-031.

1.0 SCOPE AND APPLICATION

This Standard Operating Procedure (SOP) is applicable to the collection of representative sediment samples. Analysis of sediment may be biological, chemical, or physical in nature and may be used to determine the following:

- toxicity;
- biological availability and effects of contaminants;
- benthic biota;
- extent and magnitude of contamination;
- contaminant migration pathways and source;
- fate of contaminants;
- grain size distribution;
- deposition environment;
- sediment type.

For the purpose of this procedure, sediment is the mineral and/or organic material situated beneath an aqueous layer. The aqueous layer may be either static, as in lakes, ponds, and impoundments or flowing, as in rivers and streams. The methodologies discussed in this SOP are applicable to the sampling of sediment in both flowing and standing water.

These are standard (i.e. typically applicable) operating procedures which may be varied or changed as required, dependent upon site conditions, equipment limitations or limitations imposed by the procedure. In all instances, the ultimate procedures employed should be documented and associated with the final report.

Mention of trade names or commercial products does not constitute United States Environmental Protection Agency (U.S. EPA) endorsement or recommendation for use.

2.0 METHOD SUMMARY

Sediment samples may be collected using a variety of methods and equipment, depending on the depth of the aqueous layer, the portion of the sediment profile required (surface vs. subsurface), the type of sample required (disturbed vs. undisturbed), contaminants present, sediment type, and analyses required.

Sediment is collected from beneath an aqueous layer either directly, using a hand-held device such as a shovel, trowel, or auger, or indirectly, using a remotely activated device such as an Ekman or Ponar dredge. Following collection, sediment is transferred from the sampling device to a sample containers of appropriate size and construction for the analysis (es) requested. If composite sampling techniques are employed, multiple grabs are placed into a container constructed of an inert material (e.g. stainless steel), homogenized, and transferred to the sample container(s) appropriate for the analysis (es) requested. The homogenization procedure should not be used if the sample analysis includes volatile organic compounds (VOCs). In this case,

sediment, or multiple grabs of sediment, should be transferred directly from the sample collection device or homogenization container to the sample container. Cores may also be collected directly into an acetate sleeve that serves as the sample container for undisturbed samples.

3.0 SAMPLE PRESERVATION, CONTAINERS, HANDLING, AND STORAGE

1. Chemical preservation of solids is generally not recommended. Cooling to 4 degrees Celsius (^{O}C) is usually the best approach, supplemented by the appropriate holding time for the analyses requested.

2. Wide-mouth glass containers with Teflon lined caps are utilized for sediment samples. The sample volume is a function of the analytical requirements and will be specified in the Work Plan or Sampling and Analysis Plan.

3. If analysis of sediment from a discrete depth or location is desired, sediment is transferred directly from the sampling device to a labeled sample container(s) of appropriate size and construction for the analysis (es) requested. Transfer is accomplished with a stainless steel or plastic lab spoon or equivalent.

4. If composite sampling techniques or multiple grabs are employed, equal portions of sediment from each location or collocation are deposited into a decontaminated stainless steel, plastic, or other appropriate container (e.g., Teflon). The sediment is homogenized thoroughly to obtain a mixture representative of the area sampled. The composite sediment sample is transferred to a labeled container(s) of appropriate size and construction for the analysis(es) requested. Transfer of sediment is accomplished with a stainless steel or plastic lab spoon or equivalent. Samples for VOC analysis must be transferred directly from the sample collection device or pooled from multiple areas in the homogenization container prior to mixing. This is done to minimize the loss of contaminant due to volatilization during homogenization.

5. All sampling devices should be decontaminated, then wrapped in aluminum foil. The sampling device should remain wrapped until needed. Dedicated sampling devices should be used for each sample. Disposable sampling devices for sediment are generally impractical due to cost and the large number of sediment samples which may be required. Sampling devices should be cleaned in the field using the decontamination procedure described in Environmental Response Team/Scientific, Engineering Response and Analytical Services (ERT/SERAS) SOP #2006, *Sampling Equipment Decontamination*.

4.0 INTERFERENCES AND POTENTIAL PROBLEMS

Substrate particle size and organic matter content are a direct consequence of the physical characteristics of a water body and the watershed. Contaminants are more likely to be concentrated in sediment typified by fine particle size and high organic matter. This type of sediment is most likely to be collected from depositional zones. In contrast, coarse sediment with low organic matter does not typically concentrate contaminants and are generally found in

erosional zones. The selection of a sampling location can, therefore, greatly influence the analytical results and should be justified and discussed in the Work Plan or Sampling and Analysis Plan.

5.0 EQUIPMENT/APPARATUS

Equipment needed for collection of sediment samples may include:

- Maps/plot plan
- Safety equipment
- Compass
- Global positioning system (GPS)
- Tape measure
- Survey stakes, flags, or buoys and anchors
- Camera and film
- Stainless steel, plastic, or other appropriate composition bucket
- 4-oz., 8-oz., and one-quart wide mouth jars w/Teflon lined lids
- Ziploc plastic bags
- Logbook
- Sample jar labels
- Chain of Custody records, field data sheets
- Cooler(s)
- Ice
- Decontamination supplies/equipment
- Spade or shovel
- Spatula
- Scoop
- Trowel (plastic or stainless steel)
- Bucket auger
- Tube auger
- Extension rods and pipe wrenches
- "T" handle
- Sediment coring device (tube, drive head, eggshell check value, nosecone, acetate tube, extension rods)
- Ponar dredge
- Ekman dredge
- Nylon rope or steel cable
- Messenger device
- VibraCore
- Power drill
- S.C.U.B.A. and/or other appropriate dive gear

6.0 REAGENTS

Reagents are not used for preservation of sediment samples. Decontamination solutions are specified in ERT/REAC SOP #2006, *Sampling Equipment Decontamination* .

7.0 PROCEDURES

7.1 Preparation

1. Determine the objective(s) and extent of the sampling effort. The sampling methods to be employed, and the types and amounts of equipment and supplies required will be a function of site characteristics and objectives of the study.

2. Obtain the necessary sampling and monitoring equipment.

3. Prepare schedules, and coordinate with staff, client, and regulatory agencies , if appropriate.

4. Decontaminate or preclean equipment, and ensure that it is in working order.

5. Perform a general site survey prior to site entry in accordance with the site specific Health and Safety Plan (HASP).

6. Use stakes, flags, or buoys to identify and mark all sampling locations. Site specific factors including flow regime, basin morphology, sediment characteristics, depth of overlying aqueous layer, contaminant source, and extent and nature of contamination should be considered when selecting sample locations. If required, the proposed locations may be adjusted based on site access, property boundaries, and surface obstructions.

7.2 Sample Collection

Selection of a sampling device is most often contingent upon: (1) the depth of water at the sampling location, (2) the physical characteristics of the sediment to be sampled, (3) the type of sample required and (4) the parameters being analyzed.

7.2.1 Sampling Surface Sediment with a Trowel or Scoop from Beneath a Shallow Aqueous Layer

For the purpose of this procedure, surface sediment is considered to range from 0 to 6 inches in depth and a shallow aqueous layer is considered to range from 0 to 12 inches in depth. Collection of surface sediment from beneath a shallow aqueous layer can be accomplished with tools such as spades, shovels, trowels, and scoops. Although this method can be used to collect both unconsolidated and/or consolidated sediment, it is limited somewhat by the depth and movement of the aqueous layer. Deep and rapidly flowing water render this method less

accurate than others discussed below. However, representative samples can be collected with this procedure in shallow sluggish water provided care is demonstrated by the sampler. A stainless steel or plasti c sampling implement will suffice in most applications. Care should be exercised to avoid the use of devices plated with chrome or other materials; plating is particularly common with garden trowels.

The following procedure will be used to collect sedime nt with a scoop, shovel, or trowel:

1. Using a decontaminated sampling implement, remove the desired thickness and volume of sediment from the sampling area carefully to minimize movement between sample sediment and water.

2. Transfer the sample into an appropriate sample or homogenization container. Ensure that non-dedicated containers have been adequately decontaminated.

3. Surface water should be decanted from the sample or homogenization container prior to sealing or transfer; care should b e taken to retain the fine sediment fraction during this procedure.

7.2.2 Sampling Surface Sediment with a Bucket Auger or Tube Auger from Beneath a Shallow Aqueous Layer

For the purpose of this procedure, surface sediment is considered to range from 0 to 6 inches in depth and a shallow aqueous layer from 0 to 24 inches in depth. Collection of surface sediment from beneath a shallow aqueous layer can be accomplished with a system consisting of a bucket or tube auger, a series of extensions, and a "T" handle (Figure 1, Appendix A). The use of additional extensions in conjunction with a bucket auger can increase the depth of water from which sediment can be collected from 24 inches to 10 feet or more. However, sample handling and manipulation increases in difficulty with increasing depth of water. The bucket or tube auger is driven into the sediment and used to extract a core. The various depths represented by the core are homogenized or a subsample of the core is taken from the appropriate depth.

The following procedure will be used to collect sediment samples with a bucket or tube auger:

1. If the study objectives and characteristics of the sediment or water body warrant, an acetate core may be inserted into the bucket or tube auger prior to sampling, By using this technique, an intact core can be extracted.

2. Attach the auger head to the required length of extensions, then attach the "T" handle to the upper extension.

3. If possible, clear the area to be sampled of any rocks or surfac e debris.

4. Insert the bucket or tube auger into the sediment at a 0 degrees (°) to 20° angle from vertical. This orientation minimizes spillage of the sample from the sampler upon extraction from the sediment and water.

5. Rotate the auger to cut a core of sediment.

6. Slowly withdraw the auger; if using a tube auger, make sure that the open slot is facing upward.

7. Transfer the sediment into an appropriate sample or homogenization container. Ensure that non-dedicated containers have been adequately decontaminated.

7.2.3 Sampling Deep Sediment with a Bucket Auger or Tube Auger from Beneath a Shallow Aqueous Layer

For the purpose of this procedure, deep sediment is considered to range from 6 to greater than 18 inches in depth and a shallow aqueous layer from 0 to 24 inches. Collection of deep sediment from beneath a shallow aqueous layer can be accomplished with a system consisting of a bucket auger, a tube auger, a series of extensions and a "T" handle (Figure 1, Appendix A). The use of additional extensions can increase the depth from which sediment can be collected from 24 inches to 5 feet or more. However, water clarity must be high enough to permit the sampler to directly observe the sampling operation. In addition, sample handling and manipulation increases in difficulty with increasing depth of water. The bucket auger is used to bore a hole to the upper range of the desired sampling depth and then withdrawn. The tube auger is then lowered down the borehole, and driven into the sediment to the lower range of the desired sampling depth. The tube is then withdrawn and the sample recovered from the tube. This method can be used to collect firmly consolidated sediments, but is somewhat limited by the depth of the aqueous layer, and the integrity of the initial borehole.

The following procedure will be used to collect deep sediment samples with a bucket auger and a tube auger:

1. Attach the bucket auger to the required lengths of extensions, then attach the "T" handle to the upper extension.

2. If possible, clear the area to be sampled of any rocks or surface debris.

3. Begin augering, periodically removing any accumulated sediment (i.e., cuttings) from the auger bucket. Cuttings should be disposed of far enough from the sampling area to minimize cross contamination of various depths.

4. After reaching the upper range of the desired depth, slowly and carefully remove bucket auger from the boring.

5. Attach the tube auger to the required lengths of extensions, then attach the "T" handle to the upper extension.

6. Carefully lower the tube auger down the borehole using care to avoid making contact with the borehole sides, and cross-contaminating the sample. Gradually force the tube auger into the sediment, to the desired sampling depth. Hammering of the tube auger to facilitate coring should be avoided as the vibrations may cause the boring walls to collapse.

7. Remove the tube auger from the borehole, again taking care to avoid making contact with the borehole sides and cross contaminating the sample.

8. Discard the top of core (approximately 1 inch); this represents material collected by the tube auger before penetration to the layer of concern.

9. Transfer the sediment into an appropriate sample or homogenization container. Ensure that non-dedicated containers have been properly decontaminated.

7.2.4 Sampling Surface Sediment with an Ekman or Ponar Dredge from Beneath a Shallow Aqueous Layer or in Deep Water

For the purpose of this procedure, surface sediment is considered to range from 0 to 6 inches in depth. Collection of surface sediment can be accomplished with a system consisting of a remotely activated device (dredge) and a deployment system. This technique consists of lowering a samp ling device (dredge) to the surface of the sediment by use of a rope, cable, or extended handle. The mechanism is activated, and the device entraps sediment in spring loaded or lever operated jaws.

An Ekman dredge is a lightweight sediment sampling device with spring activated jaws. It is used to collect moderately consolidated, fine textured sediment. The following procedure will be used for collecting sediment with an Ekman dredge (Figure 2, Appendix A):

1. Attach a sturdy nylon rope or stainless steel cable through the hole on the

top of the bracket, or secure the extension handle to the bracket with machine bolts.

2. Fix the jaws so that they are in the open position by placing trip cables over the release studs. Ensure that the hinged doors on the dredge top are free to open.

3. Lower the sampler to a point 4 to 6 inches above the sediment surface.

4. Drop the sampler to the sediment.

5. Trigger the jaw release mechanism by lowering the messenger weight down the line, or by depressing the button on the upper end of the extension handle.

6. Raise the sampler and slowly decant any free liquid through the top of the sampler. Care should be taken to retain the fine sediment fraction during this procedure.

7. Open the dredge jaws and transfer the sediment into an appropriate container. Ensure that non-dedicated containers have been properly decontaminated.

A Ponar dredge is a heavyweight sediment sampling device with weighted jaws that are lever activated. It is used to co llect consolidated fine to coarse textured sediment. The following procedure will be used for collecting sediment with a Ponar dredge (Figure 3, Appendix A):

1. Attach a sturdy nylon rope or steel cable to the ring provided on top of the dredge.

2. Arrange the Ponar dredge with the jaws in the open position, setting the trip bar so the sampler remains open when lifted from the top. If the dredge is so equipped, place the spring loaded pin into the aligned holes in the trip bar.

3. Slowly lower the sampler to a point approximately 2 inches above the sediment.

4. Drop the sampler to the sediment. Slack on the line will release the trip bar or spring loaded pin; pull up sharply on the line closing the dredge.

5. Raise the dredge to the surface and slowly decant any free liquid through the screens on top of the dredge. Care should be taken to retain the fine sediment fraction during this operation.

6. Open the dredge and transfer the sediment to an appropriate container. Ensure that non-dedicated containers have been properly decontaminated.

7.2.5 Sampling Subsurface Sediment with a Coring Device from Beneath a Shallow Aqueous Layer

For purposes of this procedure, subsurface sediment is considered to range from 6 to 18 inches in depth and a shallow aqueous layer is considered to range from 0 to 24 inches in depth. Collection of subsurface sediment from beneath a shallow aqueous layer can be accomplished with a system consisting of a tube sampler, acetate sleeve, eggshell check valve, nosecone, extensions, and "T" handle or drivehead. The use of additional extensions can increase the depth of water from which sediment can be collected from 24 inches to 10 feet or more. This sampler may be used with either a drive hammer for firm sediment, or a "T" handle for soft sediment. However, sample handling and manipulation increases in difficulty with increasing depth of water.

The following procedure describes the use of a sample coring device (Figure 4, Appendix A) used to collect subsurface sediments.

1. Assemble the coring device by inserting the acetate sleeve into the sampling tube.

2. Insert the "egg-shell" check valve into the lower end of the sampling tube with the convex surface positioned inside the acetate sleeve.

3. Screw the nosecone onto the lower end of the sampling tube, securing the acetate sleeve and egg-shell check valve. Screw the bracket to the top of the sampling tube.

4. Attach the sampling device to the required length of extensions; then attach the “T” handle or the drive hammer onto the upper extension.

5. Place the sampler in a perpendicular position on the sediment to be sampled.

6. If the "T" handle is used, place downward pressure on the device until the desired depth is reached. After the desired depth is reached, slowly withdraw the sampler from the sediment and proceed to Step 10.

7. If the drive hammer is selected, drive the sampler into the sediment to the desired depth.

8. Record the length of the tube that penetrated the sediment, and the number of blows required to obtain this depth.

9. Sharply pull the drive hammer upwards and dislodge the sampler from the sediment. Slowly withdraw the sampler from the sediment.

10. Carefully remove the coring device from the water.

11. Unscrew the nosecone and remove the eggshell check valve.

12. Slide the acetate sleeve out of the sampler tube. Decant surface water, using care to retain the fine sediment fraction. The sample may be used in this fashion, or the contents transferred to a sample or homogenization container.

13. If head space is present in the upper end, a hacksaw may be used to shear the acetate tube off at the sediment surface. The acetate core may then be capped at both ends. Indicate on the acetate tube the appropriate orientation of the sediment core using a waterproof marker.

14. The sediment may be extracted from the acetate sleeve and manipulated in the typical fashion. Extrude the sample from or open the acetate tube and transfer the sediment to an appropriate homogenization or sample container. Ensure that non-dedicated containers have been adequately decontaminated.

7.2.6 VibraCore

Sampling with a vibratory corer is divided into four steps: intrusion, extraction, core sampling, and packaging. The following procedure describes the use of a VibraCore to collect subsurface sediments.

7.2.6.1 Intrusion

The vibrator head should be attached near the top of the unsharpened end of the core barrel prior to initiating the coring procedure. After a coring location has been determined, the core pipe will be vertically positioned. The core barrel will initially sink into the sediment by its own weight, giving the barrel stability. Once the vibrator head engine is started, the pipe will rapidly penetrate into the sediment. Tying a teather line (rope) to the core barrel and pulling down by adding weight will aid in getting the pipe through resistant subsurfaces.

7.2.6.2 Extraction

After removing the vibrator head, the remaining pipe is cut off with a hacksaw approximately 2 feet above the ground surface. The distance to the sediment surface inside and outside of the pipe is measured to determine the amount of compaction. The pipe is then filled with water and a gas -main sealer plug is inserted and tightened to prevent loss of sediment from the core pipe when it is removed.

A tripod is assembled and placed over the intruded pipe. Two come-alongs are fastened to the eyeballs on the tripod head and to a rope securely fastened to the core pipe. The core is guided through the core pipe slot in the tripod head and then rested against the tripod head to prevent falling over during extraction. When the core is completely out of the sediment, the come-alongs are removed and the core pipe slot is opened by pulling on the cord that moves the spring-loaded slot gate. The core barrel is gently placed horizontally, to prevent disturbance of the core, and examined.

7.2.6.3 Core Sampling

Sediment samples can be removed from the core either by splitting the core lengthwise and removing the sample or by drilling holes in the core liner. Splitting the core lengthwise is preferred since it allows direct observation of the sediment structure, bedding, lithologies and other features. Samples can be collected from one half of the core and the other half can be preserved for future studies or sampling. Alternatively, a power drill fitted with a 1.5- to 2-inch saw can be used to make holes in the liner. Samples can then be removed with a spoon and the hole closed by replacing the cutout disk and sealing with duct or plastic electrical tape. Spacing of approximately 1 foot is recommended to ensure that the samples are representative of the lithologies in the cores.

7.2.6.4 Packaging

If the core is to be homogenized at the laboratory, the extracted core is cut in the field using a hacksaw. Aluminum foil, plastic caps, or wooden plugs held securely with duct tape may be used to cap the core liner. Each core section must be carefully labeled, indicating the top and bottom, with a waterproof marker.

7.2.7 Diver-Assisted Core Sampling (using S.C.U.B.A. or surface-supplied air)

For the purposes of this procedure, surface sediment is considered to range from 6 to 72 inches in depth and the overhead water column is between 4 and 120 feet. Collection can be accomplished by the diver using an acetate sleeve cut to the desired sampling depth, two plastic end

caps, and a metal cap and hammer. The diver may either push the core to the desired depth in soft sediment or use the metal cap and hammer to drive the core into firmer sediment. This method can be applicable in chemically and biologically hazardous environments, if the divers are properly trained, equipped, and following appropriate precautions.

The following procedure describes the use of a diver-assisted core sampling device to collect subsurface sediments.

1. The diver is supplied with one acetate sampling tube, two plastic end caps, duct tape, a hammer, and metal hammering cap that fits over one end of the tube to receive the hammer blows. The hammering should not damage the acetate sleeve.

2. Once the sampling location is reached, the diver notes the time, depth, and any other conditions to be transferred into the appropriate logbook or sample data sheet. If on surface-supplied air, the diver communicates this information directly to the surface control.

3. The sleeve is inserted vertically into the soft sediment until the desired depth is reached. If the desired depth cannot be achieved, a metal hammer cap is assembled on top of the vertical sleeve. The diver delivers blows to the cap with a hammer until the sleeve reaches the desired depth.

4. The hammer cap is removed without disturbing the sleeve that remains at the desired depth. One plastic end cap is placed over the exposed end of the sleeve, and when possible, duct taped to secure the cap to the sleeve.

5. With the single end cap firmly in place, the sleeve is slowly removed from the sediment. In firmer sediments, a twisting or rotating motion is used to extract the sleeve.

6. While maintaining the tube vertically, a second end cap will be placed over the other end of the core to minimize any loss of material from the sleeve. Again, when possible, the cap is duct taped to secure the cap to the sleeve.

7. With both caps in place, the core is transported vertically to the surface. The diver will place their hands over the “bottom” end of the core to secure the sleeve.

8. The core will be transferred to surface personnel to maintain

custody.

9. The acetate sleeve may be cut with a hacksaw at the sediment surface if headspace is present in the core. It is then recapped for shipping and storage. The sample location must be marked on each tube. The sample may be used as is, or the contents homogenized and transferred to another container.

8.0 CALCULATIONS

This section is not applicable to this SOP.

9.0 QUALITY ASSURANCE/QUALITY CONTROL

There are no specific quality assurance (QA) activities which apply to the implementation of these procedures. However, the following QA procedures apply:

1. All data must be documented on field data sheets or in site logbooks.

2. All instrumentation and equipment must be operated in accordance with the operating instructions supplied by the manufacturer, unless otherwise specified in the work plan. Equipment checkout activities must occur prior to sampling/operation, and must be documented.

10.0 DATA VALIDATION

This section is not applicable to this SOP.

11.0 HEALTH AND SAFETY

When working with potentially hazardous materials, follow U.S. EPA, Occupational Safety and Health Act (OSHA), and Corporate health and safety procedures.

More specifically, when sampling sediment from water bodies, physical hazards must be identified and adequate precautions must be taken to ensure the safety of the sampling team. The team member collecting the sample should not get too close to the edge of the water body, where bank failure may cause loss of balance. As a preventive measure, the person performing the sampling should be on a lifeline, and be wearing adequate protective equipment. This may include a personal flotation device (PFD), if necessary. If sampling from a vessel, appropriate protective measures including a PFD must be implemented.

12.0 REFERENCES

Mason, B.J. 1983. *Preparation of Soil Sampling Protocol: Technique and Strategies*. EPA-600/4-83-020.

Barth, D.S. and B.J. Mason. 1984. *Soil Sampling Quality Assurance User's Guide*. EPA-600/4-84-043.

U.S. Environmental Protection Agency. 1984. *Characterization of Hazardous Waste Sites - A Methods Manual, Available Sampling Methods*. 2nd Ed. Vol. II. EPA-600/4-84-076.

de Vera, E.R., B.P. Simmons, R.D. Stephen, and D.L. Storm. 1980. *Samplers and Sampling Procedures for Hazardous Waste Streams.* EPA-600/2-80-018.

13.0 APPENDICES

A - Figures

APPENDIX A
Figures
SOP #2016
November 2001

FIGURE 1. Sampling Auger

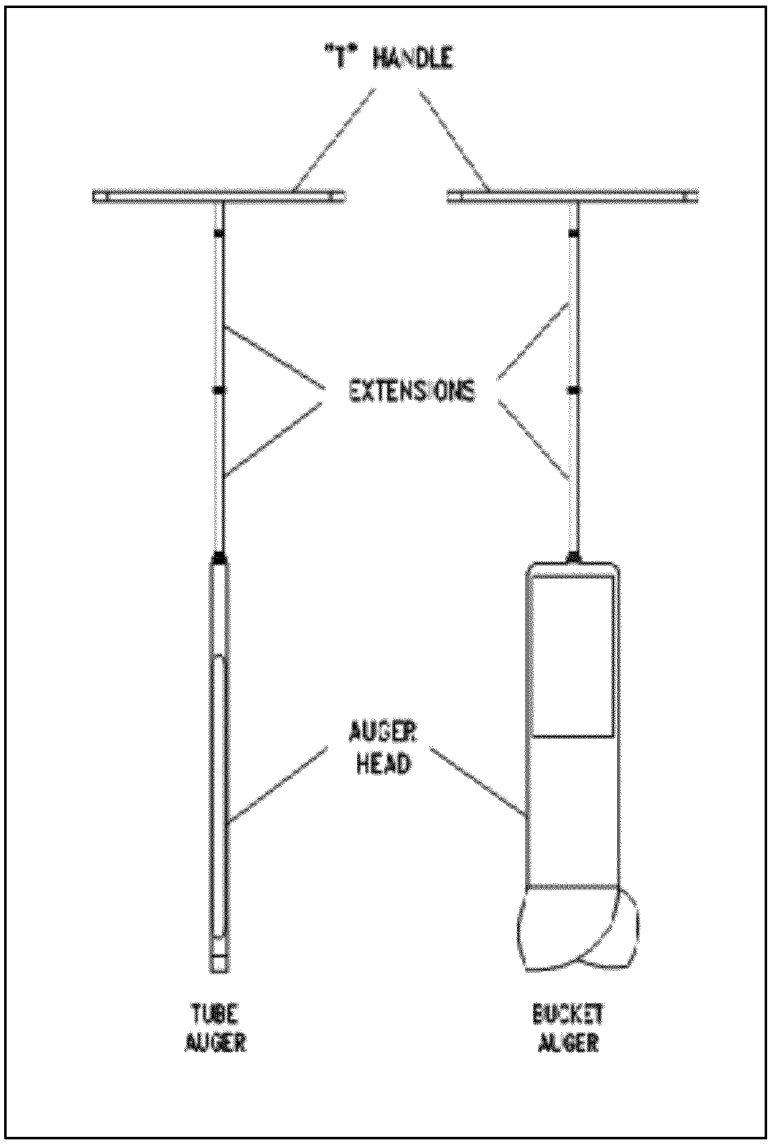

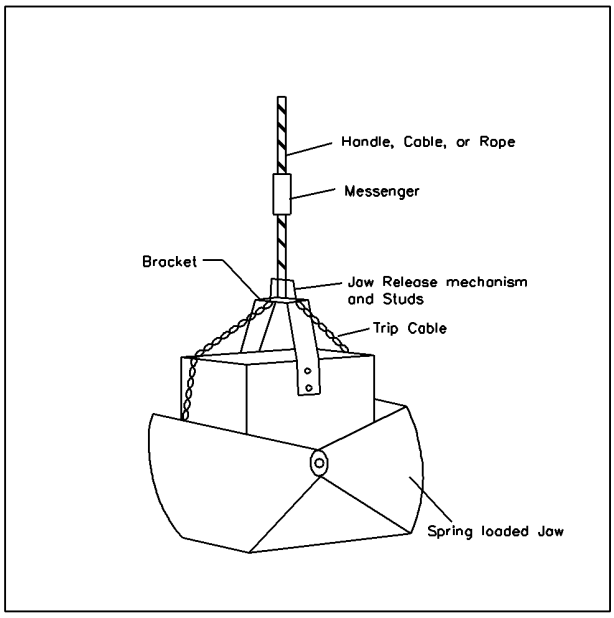
Handle, Cable, or Rope
Messenger
Bracket
Jaw Release mechanism and Studs
Trip Cable
Spring loaded Jaw

FIGURE 3. Ponar Dredge

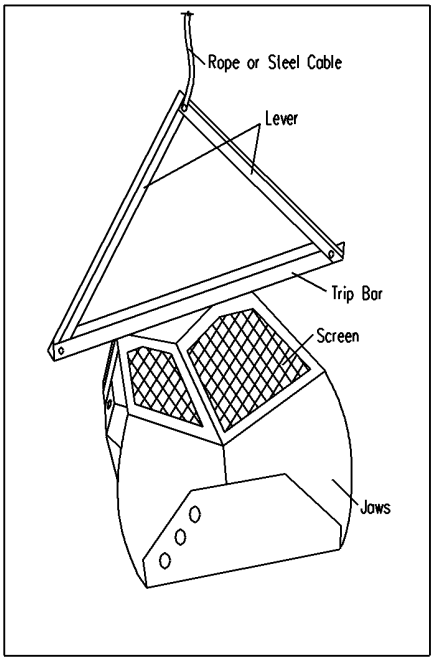
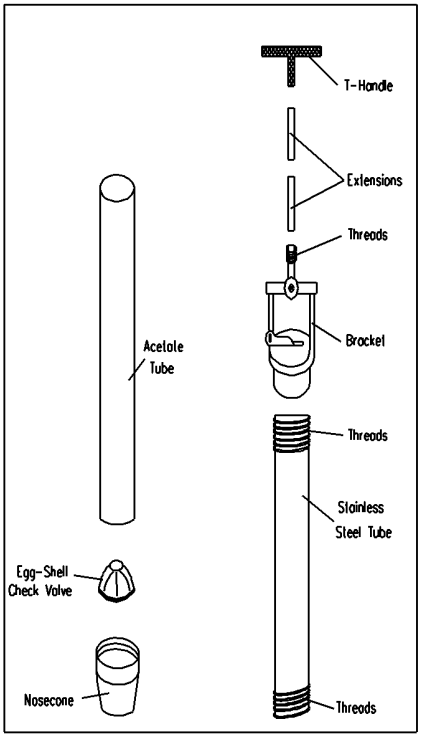
FIGURE 4. Sampling Coring Device