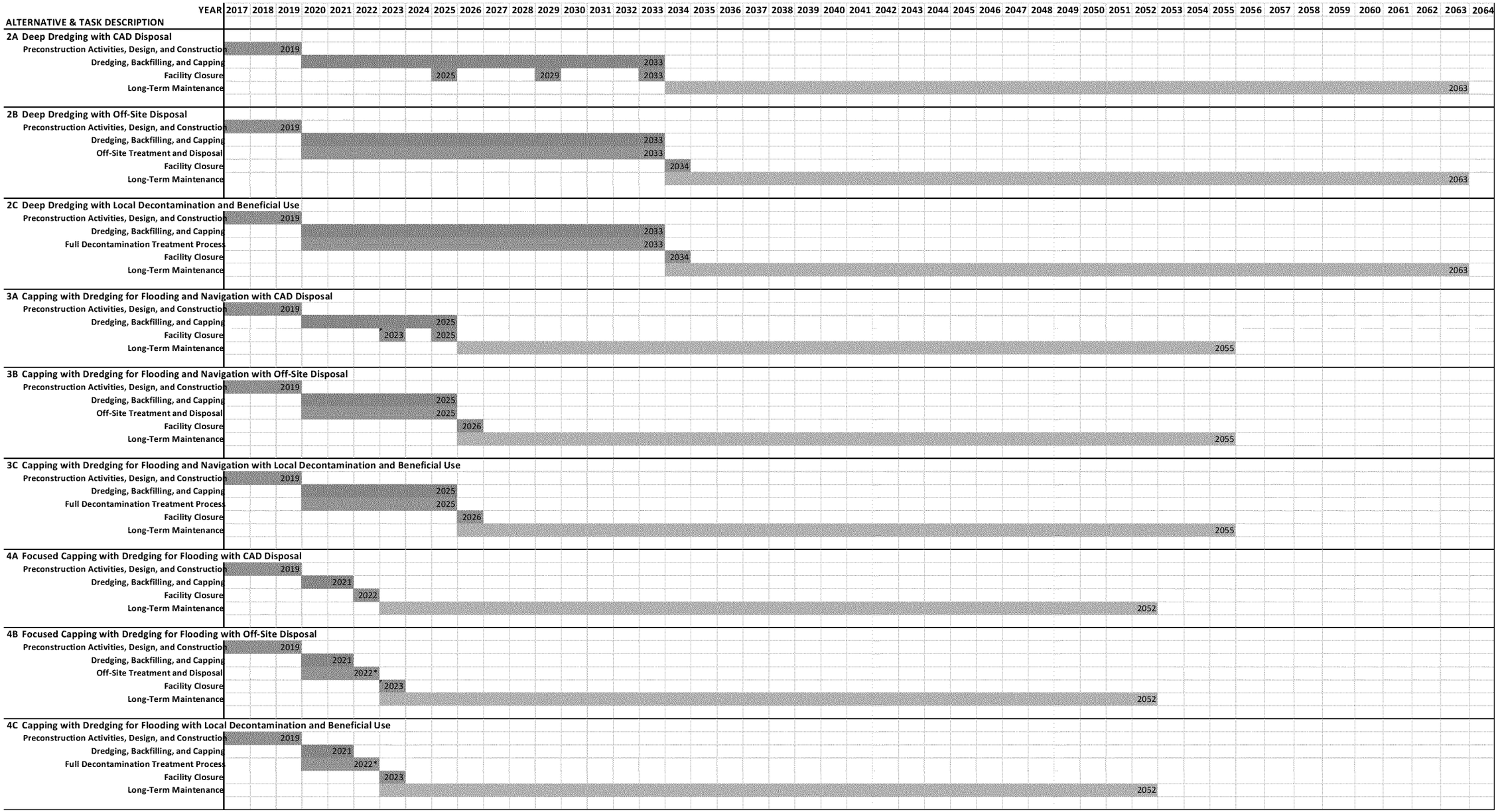

Note: Variations in estimated construction start and end dates associated with the modeling may deviate slightly from estimated dates used in the cost estimates. In general the differences were minor and resulted in completion dates for the model and cost estimates that were within six months of each other. This difference should have no impact on the relative Present Value costs of the different alternatives

Anticipated Project Schedule

Lower 8.3 Miles of the Lower Passaic River

Figure 1-1

2016

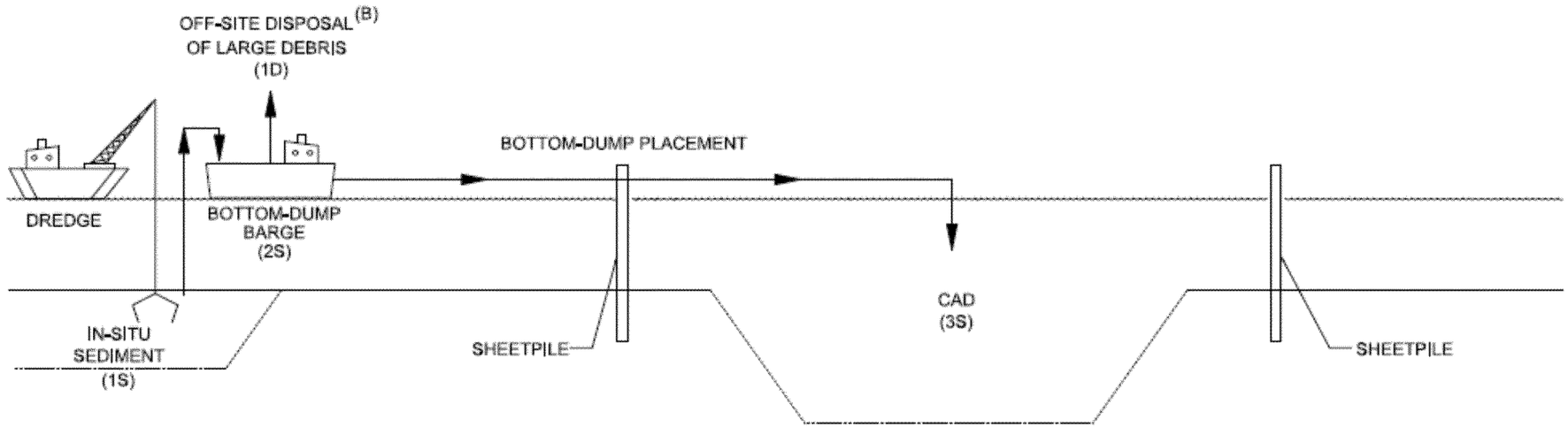

DMM Scenario A: CAD Disposal (A)					
Step	Description	Units	Alternative 2	Alternative 3	Alternative 4
Sediment Process Flow					
1S	In-Situ Sediment	Cubic Yards	9,700,000	3,500,000	1,000,000
2S	Scow	Cubic Yards	15,700,000	5,500,000	1,600,000
4S	Bottom-Dump Placement	Cubic Yards	15,700,000	5,500,000	1,600,000
5S	CAD (in-situ)	Cubic Yards	9,700,000	3,500,000	1,000,000
Debris Process Flow					
1D	Off-Site Disposal of Large Debris	Tons	8,000	6,000	2,000

Legend
Alternative 2: Deep Dredging With Backfill
Alternative 3: Capping With Dredging for Flooding and Navigation
Alternative 4: Focused Capping with Dredging for Flooding
CAD - Confined Aquatic Disposal
(A) Totals may not add due to rounding.
(B) Large debris collected during CAD construction (e.g., cars) will be cleaned and disposed under applicable regulations; medium and small size debris will be disposed in CAD. During dredging operations, debris will be disposed in CAD.

Process Flow Diagram
DMM Scenario A: CAD Disposal
NOT TO SCALE
Lower 8.3 Miles of the Lower Passaic River

Figure 1-2
2016

Legend
Alternative 2: Deep Dredging With Backfill
Alternative 3: Capping With Dredging for Flooding and Navigation
Alternative 4: Focused Capping with Dredging for Flooding

Notes:
(A) Volume of runoff resulting from one 10 -yr 24-hr storm event over the area of the site's exclusion zone.
(B) Stormwater in the retention basin is bled into the water treatment system over a period of 3 weeks.
(C) Debris collected during dredging operations and material processing will be disposed under applicable regulations.
(D) Totals may not add due to rounding.
(E) Non-contact stormwater will be routed to retention basins and discharged to the river under an NPDES permit.

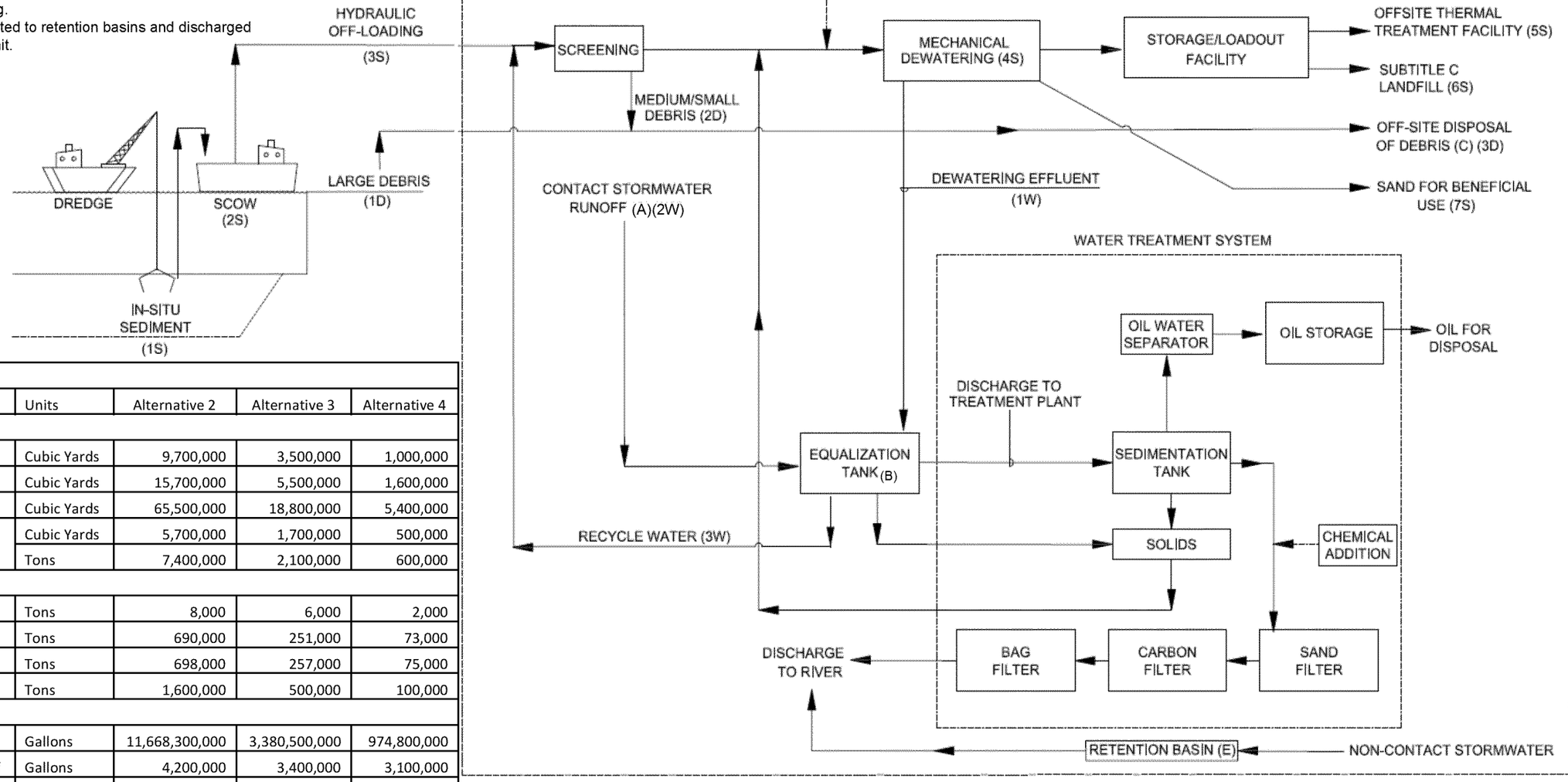

DMM Scenario B: Off-Site Disposal (D)					
Step	Description	Units	Alternative 2	Alternative 3	Alternative 4
*Sediment Process Flow**					
1S	In-Situ Sediment	Cubic Yards	9,700,000	3,500,000	1,000,000
2S	Scow	Cubic Yards	15,700,000	5,500,000	1,600,000
3S	Hydraulic Off-loading	Cubic Yards	65,500,000	18,800,000	5,400,000
4S	Dewatered Material	Cubic Yards	5,700,000	1,700,000	500,000
		Tons	7,400,000	2,100,000	600,000
Debris Process Flow					
1D	Large Debris	Tons	8,000	6,000	2,000
2D	Medium/Small Debris	Tons	690,000	251,000	73,000
3D	Off-Site Disposal of Debris	Tons	698,000	257,000	75,000
4D	Sand for Beneficial Use	Tons	1,600,000	500,000	100,000
Water Process Flow					
1W	Dewatering Water	Gallons	11,668,300,000	3,380,500,000	974,800,000
2W	Contact Stormwater Runoff	Gallons	4,200,000	3,400,000	3,100,000
3W	Recycle Water	Gallons	9,451,600,000	2,520,800,000	726,900,000

* Except as noted, volumes based on ex-situ cubic yards

Process Flow Diagram
DMM Scenario B: Off-site Disposal
NOT TO SCALE
Lower 8.3 Miles of the Lower Passaic River

Figure 1-3

2016

Legend
Alternative 2: Deep Dredging With Backfill
Alternative 3: Capping With Dredging for Flooding and Navigation
Alternative 4: Focused Capping with Dredging for Flooding

Notes:
(A) Volume of runoff resulting from one 10 -yr 24-hr storm event over the area of the site's exclusion zone (Excluding dewatering cell area).
(B) Stormwater in the retention basin is bled into the water treatment system over a period of 3 weeks.
(C) Debris collected during dredging operations and generated during dewatering operations will be cleaned disposed under applicable regulations.
(D) SCR used only for the dredge alternative.
(E) Totals may not add due to rounding.
(F) Non-contact stormwater will be routed to retention basins and discharged to the river under an NPDES permit.

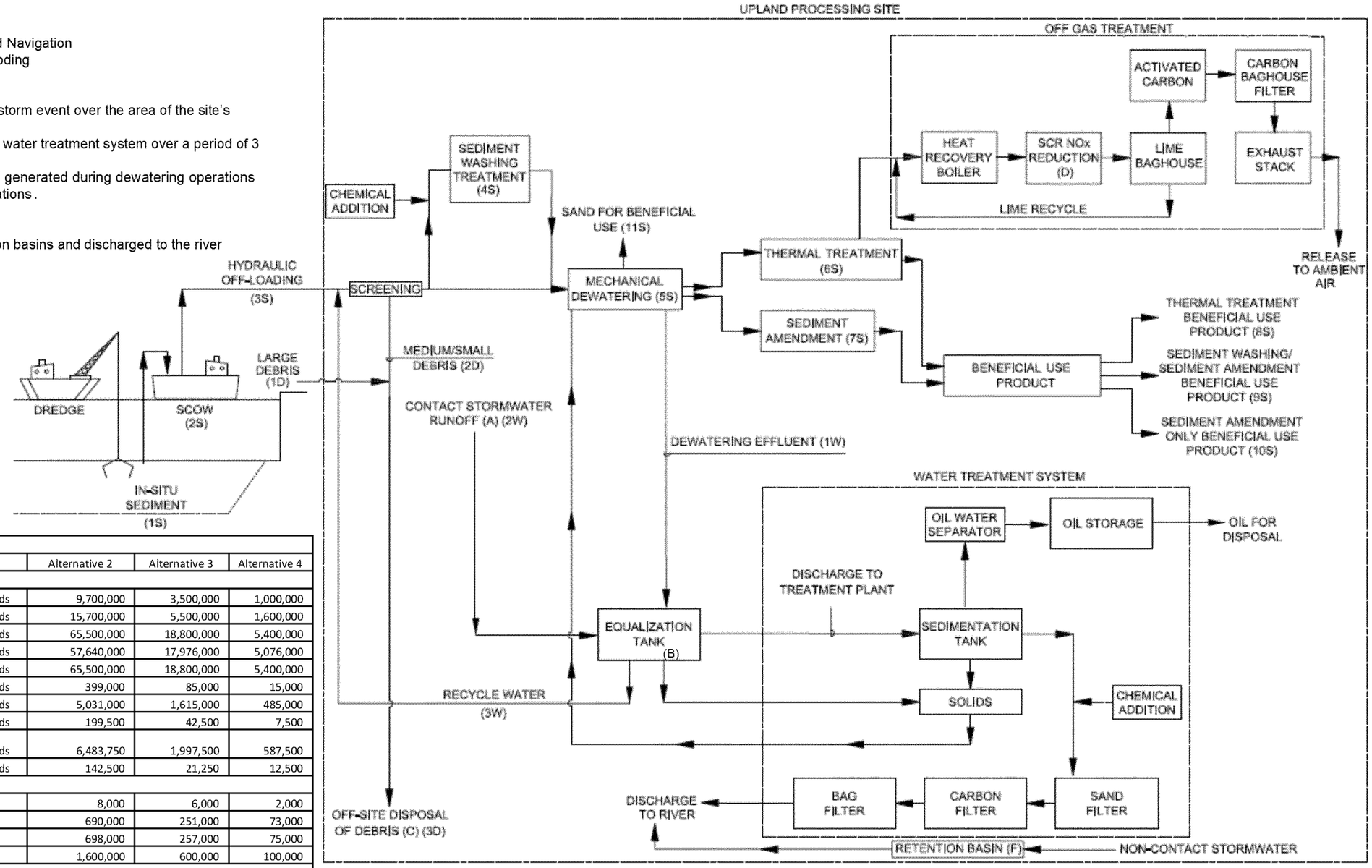

DMM Scenario C: Local Treatment and Beneficial Use (E)					
Step	Description	Units	Alternative 2	Alternative 3	Alternative 4
Sediment Process Flow					
1S	In-Situ Sediment	Cubic Yards	9,700,000	3,500,000	1,000,000
2S	Scow	Cubic Yards	15,700,000	5,500,000	1,600,000
3S	Hydraulic Off-loading	Cubic Yards	65,500,000	18,800,000	5,400,000
4S	Sediment Washing	Cubic Yards	57,640,000	17,976,000	5,076,000
5S	Mechanical Dewatering	Cubic Yards	65,500,000	18,800,000	5,400,000
6S	Thermal Treatment	Cubic Yards	399,000	85,000	15,000
7S	Sediment Amendment	Cubic Yards	5,031,000	1,615,000	485,000
8S	Thermal Treatment Beneficial Use Product	Cubic Yards	199,500	42,500	7,500
9S	Sed. Washing/Amendment Beneficial Use	Cubic Yards	6,483,750	1,997,500	587,500
10S	Sed. Amendment Only Beneficial Use	Cubic Yards	142,500	21,250	12,500
*Debris Process Flow**					
1D	Large Debris	Tons	8,000	6,000	2,000
2D	Medium/Small Debris	Tons	690,000	251,000	73,000
3D	Off-Site Disposal of Debris	Tons	698,000	257,000	75,000
4D	Sand for Beneficial Use	Tons	1,600,000	600,000	100,000
Water Process Flow					
1W	Dewatering Water	Gallons	11,668,300,000	3,380,500,000	974,800,000
2W	Contact Stormwater Runoff	Gallons	3,900,000	3,300,000	3,100,000
3W	Recycle Water	Gallons	9,451,600,000	2,520,800,000	726,900,000

* Except as noted, volumes based on ex-situ cubic yards

Process Flow Diagram
DMM Scenario C: Local Decontamination and Beneficial Use
NOT TO SCALE
Lower 8.3 Miles of the Lower Passaic River

Figure 1-4
2016