**LENAPE RESOURCES, INC.**

9489 ALEXANDER ROAD, ALEXANDER, NY 14005 www.lenaperesources.com 585.344.1200 Fax: 585.344.3283

November 17, 2009

Nicole Foley Kraft, Chief
Ground Water Compliance Section
U.S. Environmental Protection Agency
290 Broadway, 20th Floor
New York, NY 10007
Attn: Frank Brock

Re: L.C. Ranous #1 Renewal Underground Injection Control Permit Application
Administrative and Technical Review
Permit NYU 119702

Dear Mr. Brock:

Please find enclosed a copy of the final sonar survey report submitted to Lenape Resources from Sonarwire, Inc.

Should you have any questions or comments, please contact me at your convenience.

Sincerely,

John C. Holko, President
Lenape Resources, Inc.

attachments

U.S. ENVIRONMENTAL PROTECTION
2009 NOV 18 PM 2:54
DEC-WATER COMPLIANCE

# SONARWIRE, INC.

P.O. BOX 576
ABITA SPRINGS, LA 70420
Office: 985-893-9221
Toll Free: 888-211-6037
Fax: 985-893-4798
Email: sean@sonarwire.com

Survey conducted by: Sean McCool


---

LENAPE RESOURCES
CALEDONIA, NY
LC RANOUS #1, WELL #73
OCTOBER 20, 2009

Survey from 631 ft. to 666 ft.
Sonar T.D. at 666 ft.
6.625 inch casing at 631 ft.
Zero sonar tool at ground level
Site personnel: Mr. Jack Crooks

Note: Graphics were printed of depth 631 and depth 660 through 666. The data collected from depths 632 to 659 are all identical to 631 and 660. The data between depths 632 and 659 are represented in the "Wall Ranges vs Depth" table.

SONARWIRE INC.
Depth versus Volume

LENAPE RESOURCES
LC RANOUS #1, WELL #73

CALEDONIA, NY
Tue, Oct 20, 2009

| Depth | Cubic ft. per ft. | Cubic ft. total | Barrels per ft. | Barrels total |
|---|---|---|---|---|
| 632 | 0.6 | 0.6 | 0.1 | 0.1 |
| 633 | 0.6 | 1.1 | 0.1 | 0.2 |
| 634 | 0.6 | 1.7 | 0.1 | 0.3 |
| 635 | 0.6 | 2.2 | 0.1 | 0.4 |
| 636 | 0.6 | 2.8 | 0.1 | 0.5 |
| 637 | 0.6 | 3.3 | 0.1 | 0.6 |
| 638 | 0.6 | 3.9 | 0.1 | 0.7 |
| 639 | 0.6 | 4.4 | 0.1 | 0.8 |
| 640 | 0.6 | 5.0 | 0.1 | 0.9 |
| 641 | 0.6 | 5.5 | 0.1 | 1.0 |
| 642 | 0.6 | 6.1 | 0.1 | 1.1 |
| 643 | 0.6 | 6.6 | 0.1 | 1.2 |
| 644 | 0.6 | 7.2 | 0.1 | 1.3 |
| 645 | 0.6 | 7.7 | 0.1 | 1.4 |
| 646 | 0.6 | 8.3 | 0.1 | 1.5 |
| 647 | 0.6 | 8.9 | 0.1 | 1.6 |
| 648 | 0.6 | 9.4 | 0.1 | 1.7 |
| 649 | 0.6 | 10.0 | 0.1 | 1.8 |
| 650 | 0.6 | 10.5 | 0.1 | 1.9 |
| 651 | 0.6 | 11.1 | 0.1 | 2.0 |
| 652 | 0.6 | 11.6 | 0.1 | 2.1 |
| 653 | 0.6 | 12.2 | 0.1 | 2.2 |
| 654 | 0.6 | 12.7 | 0.1 | 2.3 |
| 655 | 0.6 | 13.3 | 0.1 | 2.4 |
| 656 | 0.6 | 13.8 | 0.1 | 2.5 |
| 657 | 0.6 | 14.4 | 0.1 | 2.6 |
| 658 | 0.6 | 14.9 | 0.1 | 2.7 |
| 659 | 0.6 | 15.5 | 0.1 | 2.8 |
| 660 | 0.6 | 16.1 | 0.1 | 2.9 |
| 661 | 0.6 | 16.6 | 0.1 | 3.0 |
| 662 | 0.6 | 17.2 | 0.1 | 3.1 |
| 663 | 0.6 | 17.7 | 0.1 | 3.2 |
| 664 | 1.4 | 19.1 | 0.3 | 3.4 |
| 665 | 14.6 | 33.8 | 2.6 | 6.0 |
| 666 | 7.7 | 41.5 | 1.4 | 7.4 |

SONARWIRE INC.
Max Radius & Depth vs Bearing

LENAPE RESOURCES
LC RANOUS #1, WELL #73

CALEDONIA, NY
Tue, Oct 20, 2009

This table lists the maximum radius (in feet) found at each of the 128 bearings at which soundings were taken. Also listed after each radius, (separated by ':'), is the depth (in feet) at which that maximum radius was found. Bearings are shown, (in degrees), for each row of four 'radius : depth' pairs.

| Bearing | +0.0 | | +2.8 | | +5.6 | | +8.4 | |
|---|---|---|---|---|---|---|---|---|
| 0.0 | 2.5: | 664 | 3.4: | 664 | 3.6: | 664 | 7.6: | 664 |
| 11.3 | 7.6: | 664 | 7.5: | 664 | 3.7: | 664 | 2.9: | 664 |
| 22.5 | 2.9: | 664 | 2.7: | 664 | 2.7: | 664 | 2.7: | 664 |
| 33.8 | 2.7: | 664 | 2.7: | 664 | 2.5: | 664 | 2.4: | 664 |
| 45.0 | 2.4: | 664 | 2.3: | 664 | 2.2: | 664 | 2.1: | 664 |
| 56.3 | 2.0: | 664 | 2.0: | 664 | 2.0: | 664 | 1.9: | 664 |
| 67.5 | 1.9: | 664 | 1.9: | 664 | 1.9: | 664 | 1.8: | 664 |
| 78.8 | 1.8: | 664 | 1.6: | 664 | 1.6: | 664 | 1.5: | 664 |
| 90.0 | 1.4: | 664 | 1.4: | 664 | 1.4: | 664 | 1.5: | 665 |
| 101.3 | 1.5: | 665 | 1.5: | 665 | 1.5: | 665 | 1.5: | 665 |
| 112.5 | 1.5: | 665 | 1.5: | 665 | 1.5: | 665 | 1.5: | 665 |
| 123.8 | 1.5: | 665 | 1.5: | 665 | 1.5: | 665 | 1.5: | 665 |
| 135.0 | 1.5: | 665 | 1.5: | 665 | 1.5: | 665 | 1.5: | 665 |
| 146.3 | 1.5: | 665 | 1.5: | 665 | 1.5: | 665 | 1.5: | 665 |
| 157.5 | 1.5: | 665 | 1.5: | 665 | 1.5: | 665 | 1.6: | 665 |
| 168.8 | 1.6: | 665 | 1.6: | 665 | 1.6: | 665 | 1.7: | 665 |
| 180.0 | 1.7: | 665 | 1.7: | 665 | 1.7: | 665 | 1.8: | 665 |
| 191.3 | 1.8: | 665 | 1.8: | 665 | 1.8: | 665 | 1.8: | 665 |
| 202.5 | 1.8: | 665 | 1.8: | 665 | 1.8: | 665 | 1.8: | 665 |
| 213.8 | 1.8: | 665 | 1.8: | 665 | 1.8: | 665 | 1.8: | 665 |
| 225.0 | 1.8: | 665 | 1.8: | 665 | 1.8: | 665 | 1.8: | 665 |
| 236.3 | 1.8: | 665 | 1.8: | 665 | 1.8: | 665 | 1.8: | 665 |
| 247.5 | 1.8: | 665 | 1.8: | 665 | 1.8: | 665 | 1.8: | 665 |
| 258.8 | 1.8: | 665 | 1.8: | 665 | 1.8: | 664 | 1.8: | 664 |
| 270.0 | 1.8: | 664 | 1.9: | 664 | 2.0: | 664 | 2.0: | 664 |
| 281.3 | 2.0: | 664 | 2.0: | 664 | 2.1: | 664 | 2.1: | 664 |
| 292.5 | 2.1: | 664 | 2.1: | 664 | 2.2: | 664 | 2.3: | 664 |
| 303.8 | 2.4: | 664 | 2.4: | 664 | 2.4: | 664 | 2.4: | 664 |
| 315.0 | 2.4: | 664 | 2.4: | 664 | 2.4: | 664 | 2.9: | 664 |
| 326.3 | 2.9: | 664 | 2.9: | 664 | 2.9: | 664 | 2.9: | 664 |
| 337.5 | 2.8: | 664 | 2.6: | 664 | 2.5: | 664 | 2.5: | 664 |
| 348.8 | 2.4: | 664 | 2.5: | 664 | 2.5: | 664 | 2.5: | 664 |

Between 631 and 666 foot depths, maximum radius
was 7.6 feet at bearing 11.3 at 664.0 foot depth

LENAPE RESOURCES
CALEDONIA, NY
LC RANOUS #1, WELL #73

# SONARWIRE, INC

**Max Range vs Bearing**

Max Radius= 7.6 ft @ 11.2 deg
Depth= 664 ft. Tue, Oct 20, 2009

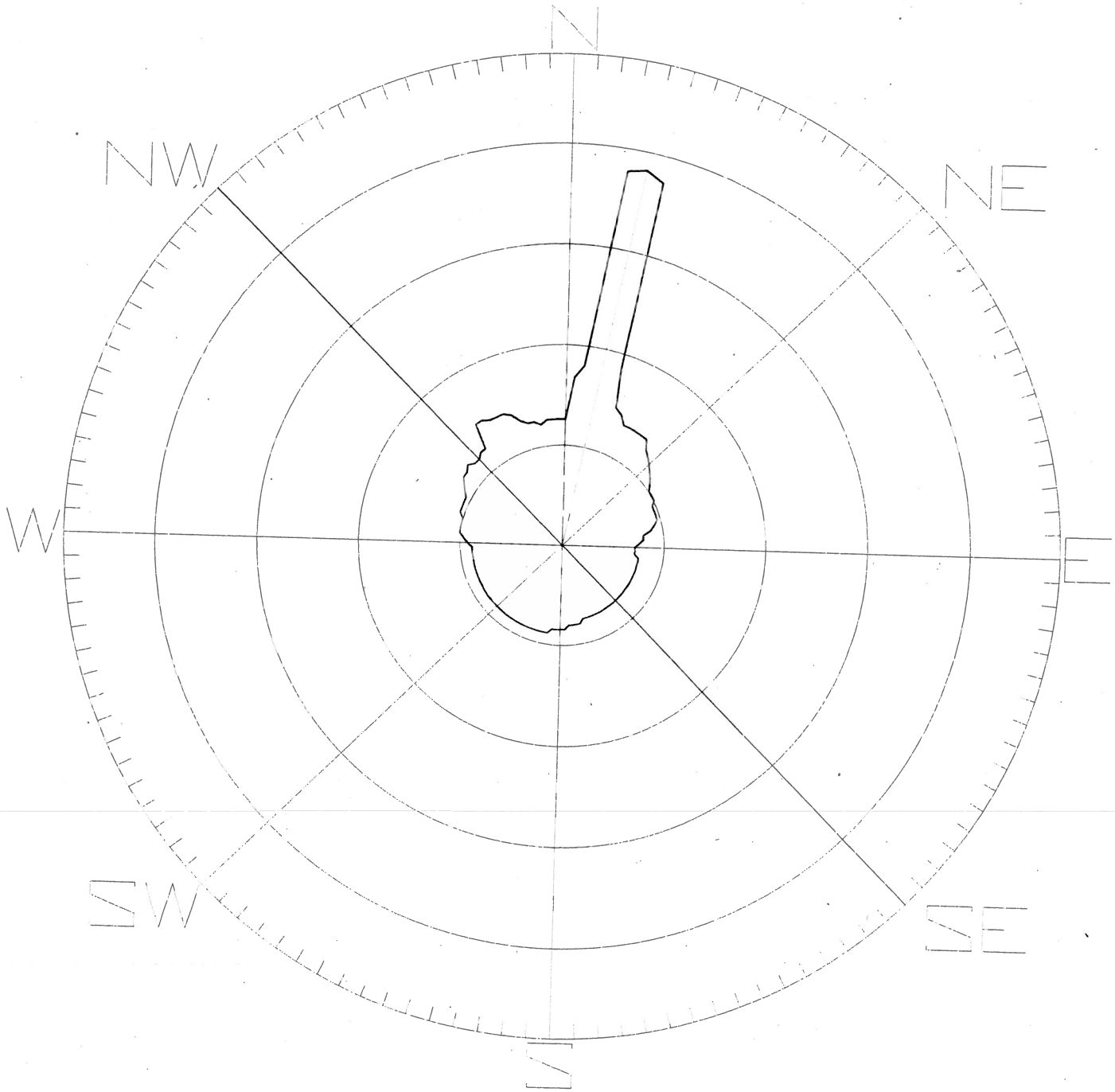


1 inch = 3.0 ft.

9 8 7 6 5 4 3 2 1 0 1 2 3 4 5 6 7 8 9

SONARWIRE INC.
Average Wall Range versus Depth (ft.)

LENAPE RESOURCES
LC RANOUS #1, WELL #73

CALEDONIA, NY
Tue, Oct 20, 2009

| Depth | Avg Rad ft. | Min Rad ft @ Az | Max Rad ft @ Az | Min Dia ft @ Az | Max Dia ft @ Az |
|---|---|---|---|---|---|
| 631 | 1 | 1 @ 180.1 | 1 @ 0.1 | 1 @ 0.1-180.1 | 1 @ 0.1-180.1 |
| 632 | 1 | 1 @ 180.1 | 1 @ 0.1 | 1 @ 0.1-180.1 | 1 @ 0.1-180.1 |
| 633 | 1 | 1 @ 180.1 | 1 @ 0.1 | 1 @ 0.1-180.1 | 1 @ 0.1-180.1 |
| 634 | 1 | 1 @ 180.1 | 1 @ 0.1 | 1 @ 0.1-180.1 | 1 @ 0.1-180.1 |
| 635 | 1 | 1 @ 180.1 | 1 @ 0.1 | 1 @ 0.1-180.1 | 1 @ 0.1-180.1 |
| 636 | 1 | 1 @ 180.1 | 1 @ 0.1 | 1 @ 0.1-180.1 | 1 @ 0.1-180.1 |
| 637 | 1 | 1 @ 180.1 | 1 @ 0.1 | 1 @ 0.1-180.1 | 1 @ 0.1-180.1 |
| 638 | 1 | 1 @ 180.1 | 1 @ 0.1 | 1 @ 0.1-180.1 | 1 @ 0.1-180.1 |
| 639 | 1 | 1 @ 180.1 | 1 @ 0.1 | 1 @ 0.1-180.1 | 1 @ 0.1-180.1 |
| 640 | 1 | 1 @ 180.1 | 1 @ 0.1 | 1 @ 0.1-180.1 | 1 @ 0.1-180.1 |
| 641 | 1 | 1 @ 180.1 | 1 @ 0.1 | 1 @ 0.1-180.1 | 1 @ 0.1-180.1 |
| 642 | 1 | 1 @ 180.1 | 1 @ 0.1 | 1 @ 0.1-180.1 | 1 @ 0.1-180.1 |
| 643 | 1 | 1 @ 180.1 | 1 @ 0.1 | 1 @ 0.1-180.1 | 1 @ 0.1-180.1 |
| 644 | 1 | 1 @ 180.1 | 1 @ 0.1 | 1 @ 0.1-180.1 | 1 @ 0.1-180.1 |
| 645 | 1 | 1 @ 180.1 | 1 @ 0.1 | 1 @ 0.1-180.1 | 1 @ 0.1-180.1 |
| 646 | 1 | 1 @ 180.1 | 1 @ 0.1 | 1 @ 0.1-180.1 | 1 @ 0.1-180.1 |
| 647 | 1 | 1 @ 180.1 | 1 @ 0.1 | 1 @ 0.1-180.1 | 1 @ 0.1-180.1 |
| 648 | 1 | 1 @ 180.1 | 1 @ 0.1 | 1 @ 0.1-180.1 | 1 @ 0.1-180.1 |
| 649 | 1 | 1 @ 180.1 | 1 @ 0.1 | 1 @ 0.1-180.1 | 1 @ 0.1-180.1 |
| 650 | 1 | 1 @ 180.1 | 1 @ 0.1 | 1 @ 0.1-180.1 | 1 @ 0.1-180.1 |
| 651 | 1 | 1 @ 180.1 | 1 @ 0.1 | 1 @ 0.1-180.1 | 1 @ 0.1-180.1 |
| 652 | 1 | 1 @ 180.1 | 1 @ 0.1 | 1 @ 0.1-180.1 | 1 @ 0.1-180.1 |
| 653 | 1 | 1 @ 180.1 | 1 @ 0.1 | 1 @ 0.1-180.1 | 1 @ 0.1-180.1 |
| 654 | 1 | 1 @ 180.1 | 1 @ 0.1 | 1 @ 0.1-180.1 | 1 @ 0.1-180.1 |
| 655 | 1 | 1 @ 180.1 | 1 @ 0.1 | 1 @ 0.1-180.1 | 1 @ 0.1-180.1 |
| 656 | 1 | 1 @ 180.1 | 1 @ 0.1 | 1 @ 0.1-180.1 | 1 @ 0.1-180.1 |
| 657 | 1 | 1 @ 180.1 | 1 @ 0.1 | 1 @ 0.1-180.1 | 1 @ 0.1-180.1 |
| 658 | 1 | 1 @ 180.1 | 1 @ 0.1 | 1 @ 0.1-180.1 | 1 @ 0.1-180.1 |
| 659 | 1 | 1 @ 180.1 | 1 @ 0.1 | 1 @ 0.1-180.1 | 1 @ 0.1-180.1 |
| 660 | 1 | 1 @ 180.1 | 1 @ 0.1 | 1 @ 0.1-180.1 | 1 @ 0.1-180.1 |
| 661 | 1 | 1 @ 180.1 | 1 @ 0.1 | 1 @ 0.1-180.1 | 1 @ 0.1-180.1 |
| 662 | 1 | 1 @ 180.1 | 1 @ 0.1 | 1 @ 0.1-180.1 | 1 @ 0.1-180.1 |
| 663 | 1 | 1 @ 0.1 | 2 @ 180.1 | 2 @ 67.5-247.6 | 2 @ 0.1-180.1 |
| 664 | 2 | 1 @ 129.4 | 8 @ 11.3 | 3 @ 64.7-244.7 | 9 @ 11.3-191.3 |
| 665 | 2 | 2 @ 59.1 | 2 @ 188.5 | 3 @ 59.1-239.1 | 4 @ 8.5-188.5 |
| 666 | 1 | 1 @ 0.1 | 2 @ 180.1 | 2 @ 90.0-270.1 | 2 @ 59.1-239.1 |

SONARWIRE INC.
Wall Ranges versus Depth (ft.)

LENAPE RESOURCES
LC RANOUS #1, WELL #73

CALEDONIA, NY
Tue, Oct 20, 2009

| Depth | Tilt | N | NE | E | SE | S | SW | W | NW |
|---|---|---|---|---|---|---|---|---|---|
| 631 | 0 | 0.4 | 0.4 | 0.4 | 0.4 | 0.4 | 0.4 | 0.4 | 0.4 |
| 632 | 0 | 0.4 | 0.4 | 0.4 | 0.4 | 0.4 | 0.4 | 0.4 | 0.4 |
| 633 | 0 | 0.4 | 0.4 | 0.4 | 0.4 | 0.4 | 0.4 | 0.4 | 0.4 |
| 634 | 0 | 0.4 | 0.4 | 0.4 | 0.4 | 0.4 | 0.4 | 0.4 | 0.4 |
| 635 | 0 | 0.4 | 0.4 | 0.4 | 0.4 | 0.4 | 0.4 | 0.4 | 0.4 |
| 636 | 0 | 0.4 | 0.4 | 0.4 | 0.4 | 0.4 | 0.4 | 0.4 | 0.4 |
| 637 | 0 | 0.4 | 0.4 | 0.4 | 0.4 | 0.4 | 0.4 | 0.4 | 0.4 |
| 638 | 0 | 0.4 | 0.4 | 0.4 | 0.4 | 0.4 | 0.4 | 0.4 | 0.4 |
| 639 | 0 | 0.4 | 0.4 | 0.4 | 0.4 | 0.4 | 0.4 | 0.4 | 0.4 |
| 640 | 0 | 0.4 | 0.4 | 0.4 | 0.4 | 0.4 | 0.4 | 0.4 | 0.4 |
| 641 | 0 | 0.4 | 0.4 | 0.4 | 0.4 | 0.4 | 0.4 | 0.4 | 0.4 |
| 642 | 0 | 0.4 | 0.4 | 0.4 | 0.4 | 0.4 | 0.4 | 0.4 | 0.4 |
| 643 | 0 | 0.4 | 0.4 | 0.4 | 0.4 | 0.4 | 0.4 | 0.4 | 0.4 |
| 644 | 0 | 0.4 | 0.4 | 0.4 | 0.4 | 0.4 | 0.4 | 0.4 | 0.4 |
| 645 | 0 | 0.4 | 0.4 | 0.4 | 0.4 | 0.4 | 0.4 | 0.4 | 0.4 |
| 646 | 0 | 0.4 | 0.4 | 0.4 | 0.4 | 0.4 | 0.4 | 0.4 | 0.4 |
| 647 | 0 | 0.4 | 0.4 | 0.4 | 0.4 | 0.4 | 0.4 | 0.4 | 0.4 |
| 648 | 0 | 0.4 | 0.4 | 0.4 | 0.4 | 0.4 | 0.4 | 0.4 | 0.4 |
| 649 | 0 | 0.4 | 0.4 | 0.4 | 0.4 | 0.4 | 0.4 | 0.4 | 0.4 |
| 650 | 0 | 0.4 | 0.4 | 0.4 | 0.4 | 0.4 | 0.4 | 0.4 | 0.4 |
| 651 | 0 | 0.4 | 0.4 | 0.4 | 0.4 | 0.4 | 0.4 | 0.4 | 0.4 |
| 652 | 0 | 0.4 | 0.4 | 0.4 | 0.4 | 0.4 | 0.4 | 0.4 | 0.4 |
| 653 | 0 | 0.4 | 0.4 | 0.4 | 0.4 | 0.4 | 0.4 | 0.4 | 0.4 |
| 654 | 0 | 0.4 | 0.4 | 0.4 | 0.4 | 0.4 | 0.4 | 0.4 | 0.4 |
| 655 | 0 | 0.4 | 0.4 | 0.4 | 0.4 | 0.4 | 0.4 | 0.4 | 0.4 |
| 656 | 0 | 0.4 | 0.4 | 0.4 | 0.4 | 0.4 | 0.4 | 0.4 | 0.4 |
| 657 | 0 | 0.4 | 0.4 | 0.4 | 0.4 | 0.4 | 0.4 | 0.4 | 0.4 |
| 658 | 0 | 0.4 | 0.4 | 0.4 | 0.4 | 0.4 | 0.4 | 0.4 | 0.4 |
| 659 | 0 | 0.4 | 0.4 | 0.4 | 0.4 | 0.4 | 0.4 | 0.4 | 0.4 |
| 660 | 0 | 0.4 | 0.4 | 0.4 | 0.4 | 0.4 | 0.4 | 0.4 | 0.4 |
| 661 | 0 | 0.4 | 0.4 | 0.4 | 0.4 | 0.4 | 0.4 | 0.4 | 0.4 |
| 662 | 0 | 0.4 | 0.4 | 0.4 | 0.4 | 0.4 | 0.4 | 0.4 | 0.4 |
| 663 | 0 | 0.5 | 0.5 | 0.5 | 0.6 | 1.2 | 0.8 | 0.5 | 0.5 |
| 664 | 0 | 2.5 | 2.4 | 1.4 | 0.8 | 0.8 | 1.1 | 1.8 | 2.4 |
| 665 | 0 | 1.7 | 1.4 | 1.4 | 1.5 | 1.7 | 1.8 | 1.7 | 1.5 |
| 666 | 0 | 0.7 | 0.7 | 0.8 | 0.9 | 1.0 | 1.0 | 0.8 | 0.7 |

LENAPE RESOURCES
CALEDONIA, NY
LC RANOUS #1, WELL #73
Depth= 631.0 ft Tilt=0degs

# SONARWIRE, INC

**Range vs Bearing**

Max Radius 0.4 ft @ 30.9 deg
Tue. Oct 20, 2009

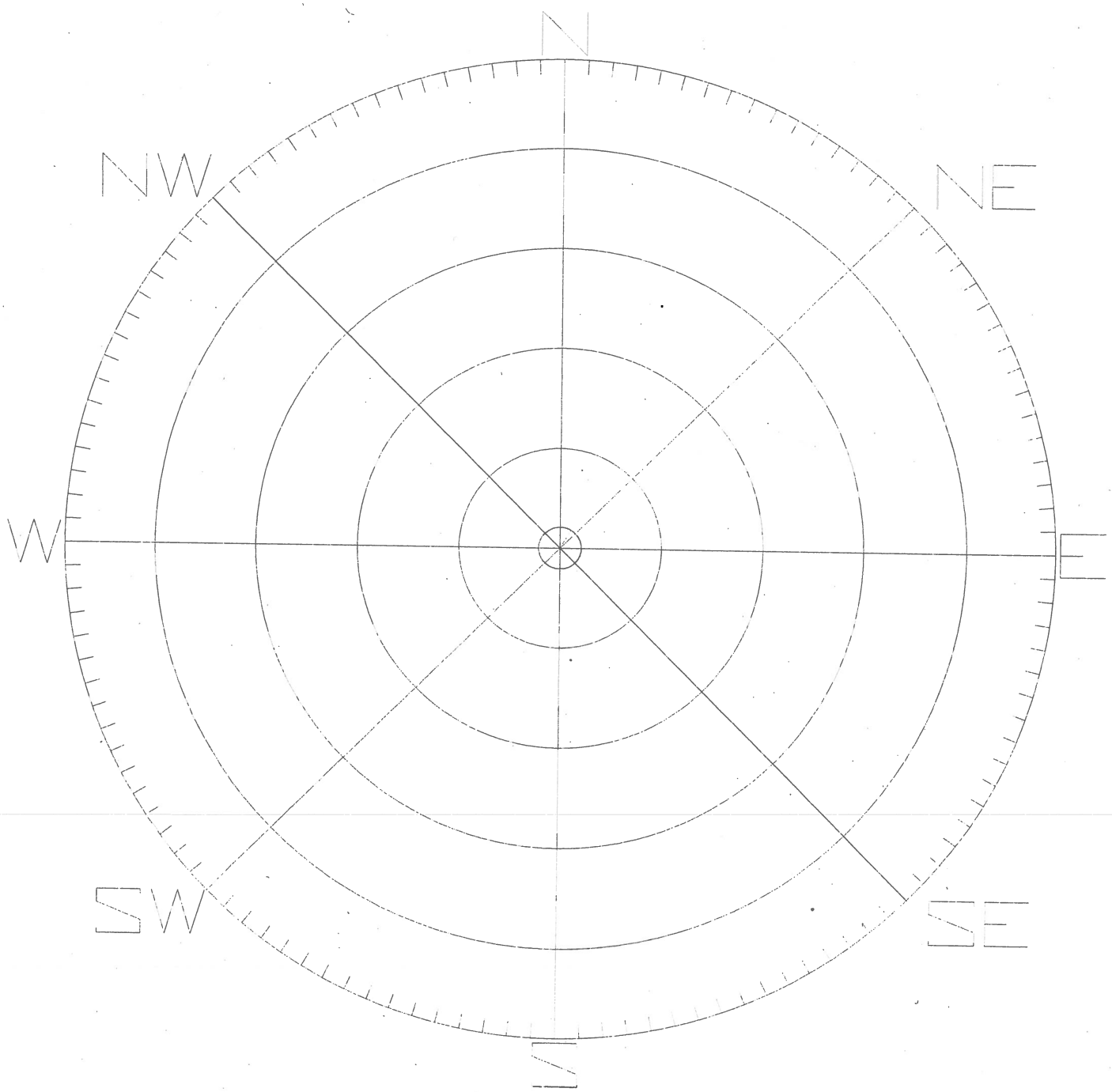


1 inch = 3.0 ft.

9 8 7 6 5 4 3 2 1 0 1 2 3 4 5 6 7 8 9

LENAPE RESOURCES
CALEDONIA, NY
LC RANOUS #1, WELL #73
Depth= 660.0 ft Tilt=0degs

# SONARWIRE, INC

## Range vs Bearing

Max Radius 0.4 ft @ 16.9 deg
Tue. Oct 20, 2009

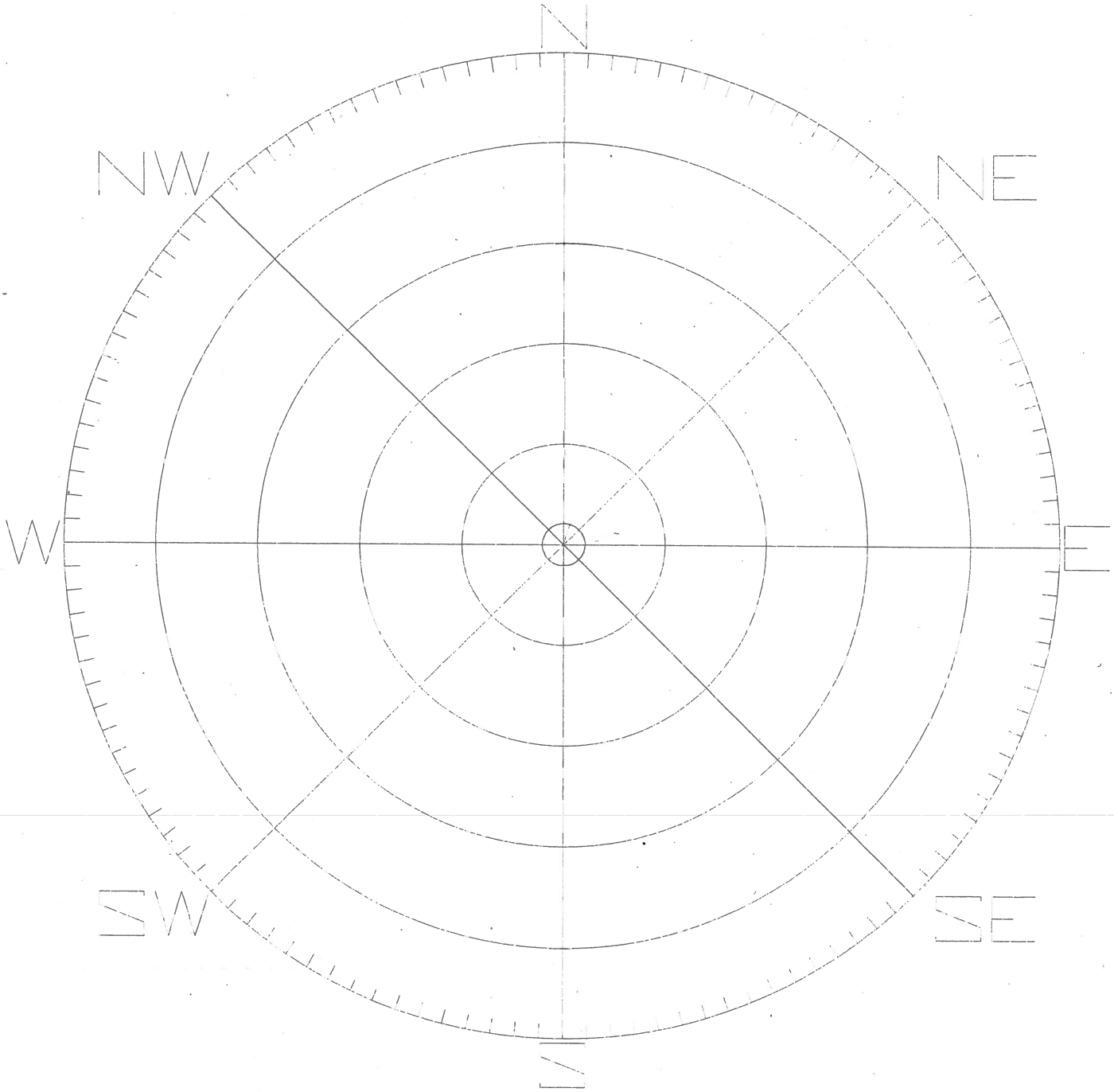


1 inch = 3.0 ft.

9 8 7 6 5 4 3 2 1 0 1 2 3 4 5 6 7 8 9

LENAPE RESOURCES
CALEDONIA, NY
LC RANOUS #1, WELL #73
Depth= 661.0 ft Tilt=0degs

# SONARWIRE, INC
## Range vs Bearing

Max Radius 0.4 ft @ 16.9 deg
Tue, Oct 20, 2009

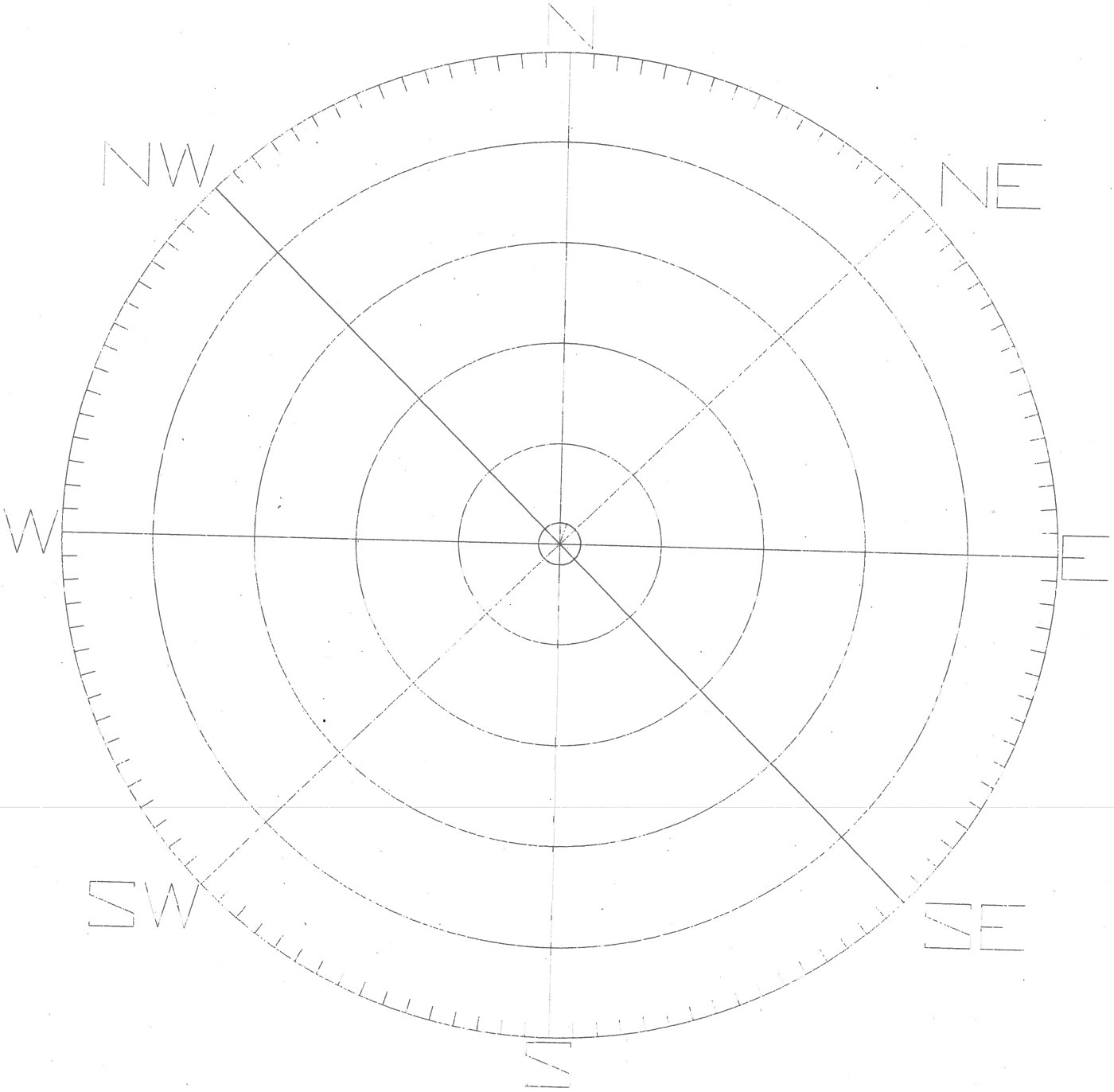


1 inch = 3.0 ft.

9 8 7 6 5 4 3 2 1 0 1 2 3 4 5 6 7 8 9

LENAPE RESOURCES
CALEDONIA, NY
LC RANOUS #1, WELL #73
Depth= 662.0 ft Tilt=0degs

# SONARWIRE, INC
## Range vs Bearing

Max Radius 0.4 ft @ 16.9 deg
Tue. Oct 20, 2009

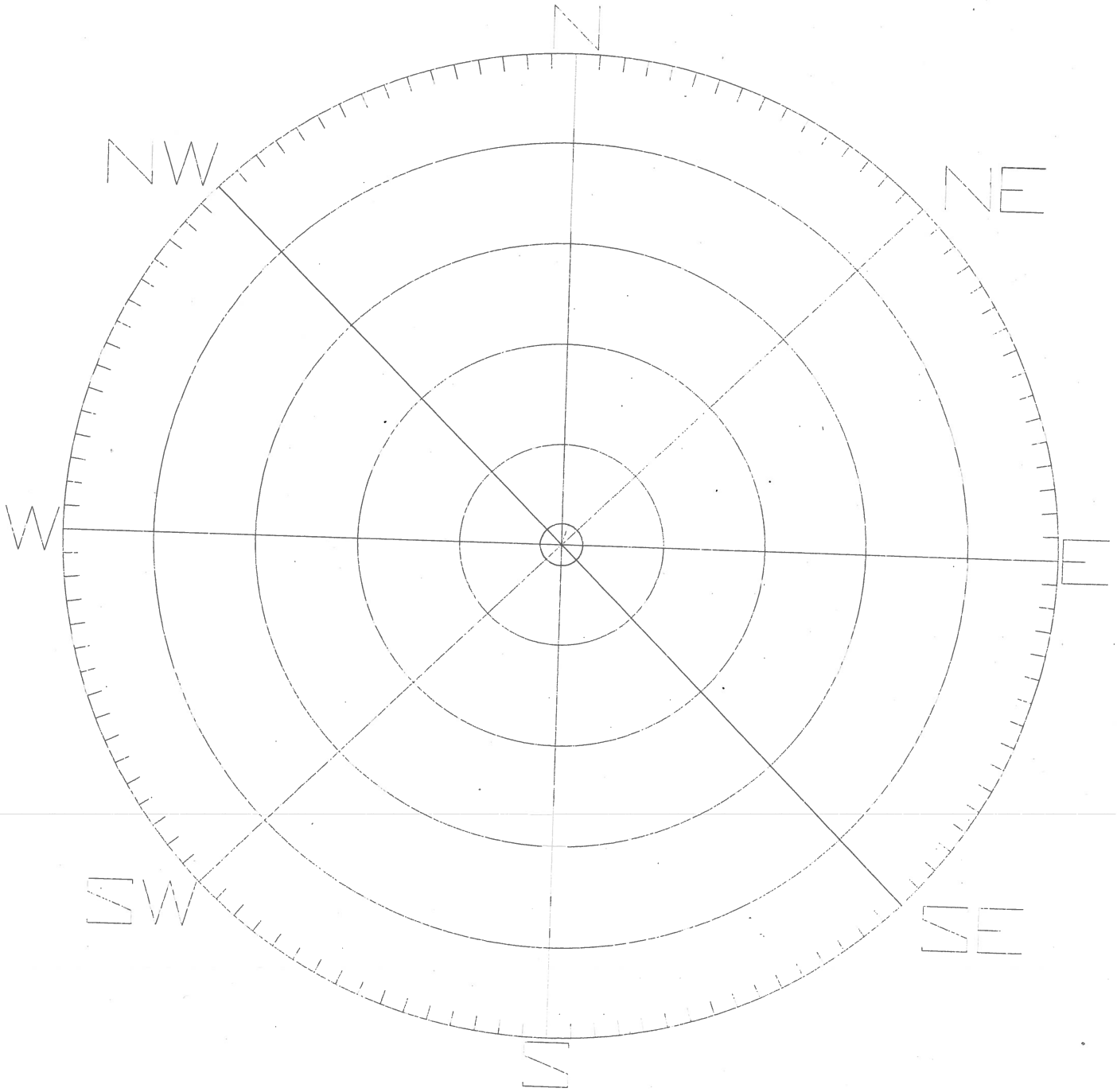


1 inch = 3.0 ft.

9 8 7 6 5 4 3 2 1 0 1 2 3 4 5 6 7 8 9

LENAPE RESOURCES
CALEDONIA, NY
LC RANOUS #1, WELL #73
Depth= 663.0 ft Tilt=0degs

# SONARWIRE, INC

**Range vs Bearing**

Max Radius 1.2 ft @ 174.4 deg
Tue, Oct 20, 2009

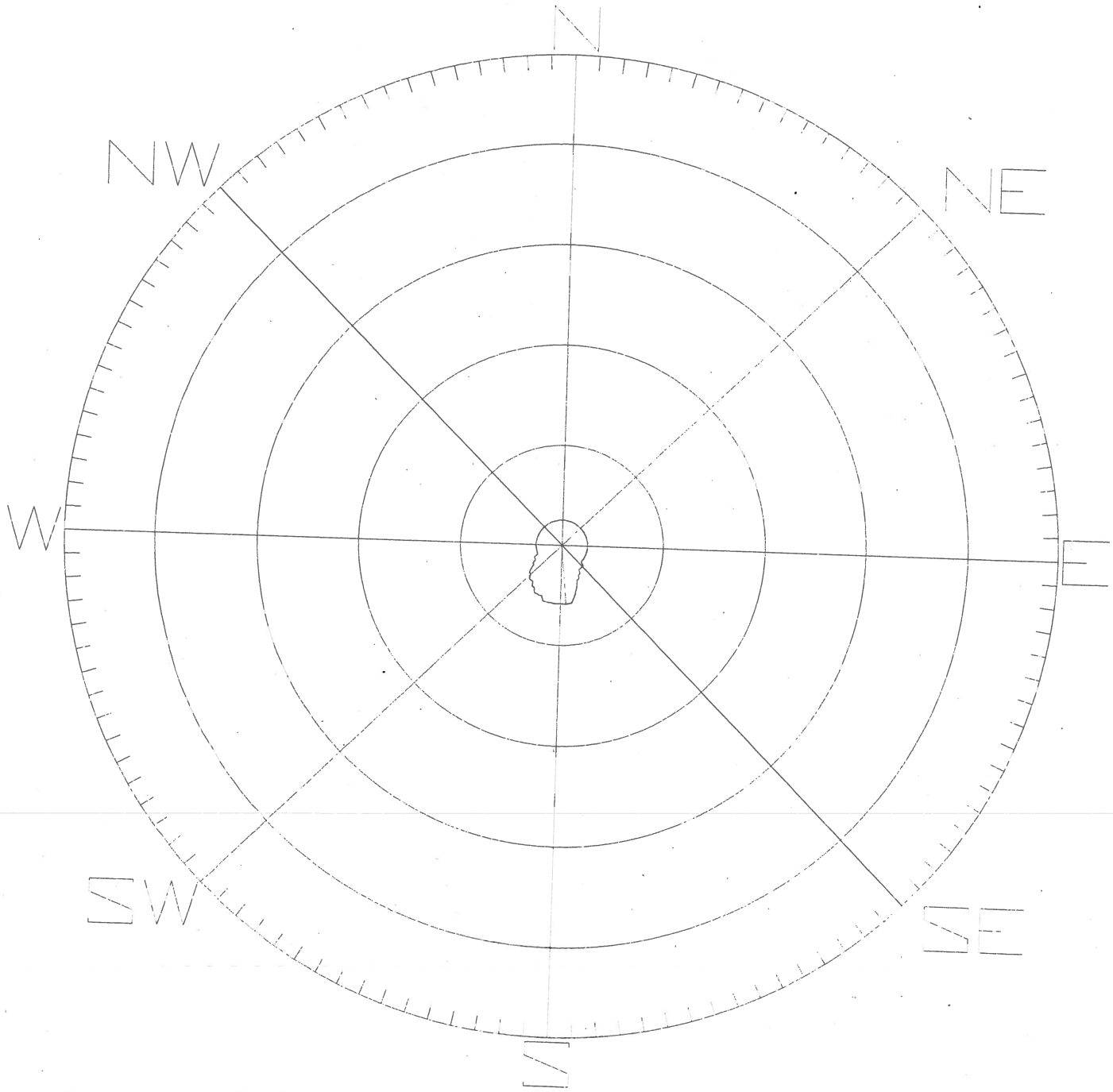


1 inch = 3.0 ft.

9 8 7 6 5 4 3 2 1 0 1 2 3 4 5 6 7 8 9

LENAPE RESOURCES
CALEDONIA, NY
LC RANOUS #1, WELL #73
Depth= 664.0 ft Tilt=0degs

# SONARWIRE, INC

**Range vs Bearing**

Max Radius 7.6 ft @ 11.2 deg
Tue, Oct 20, 2009

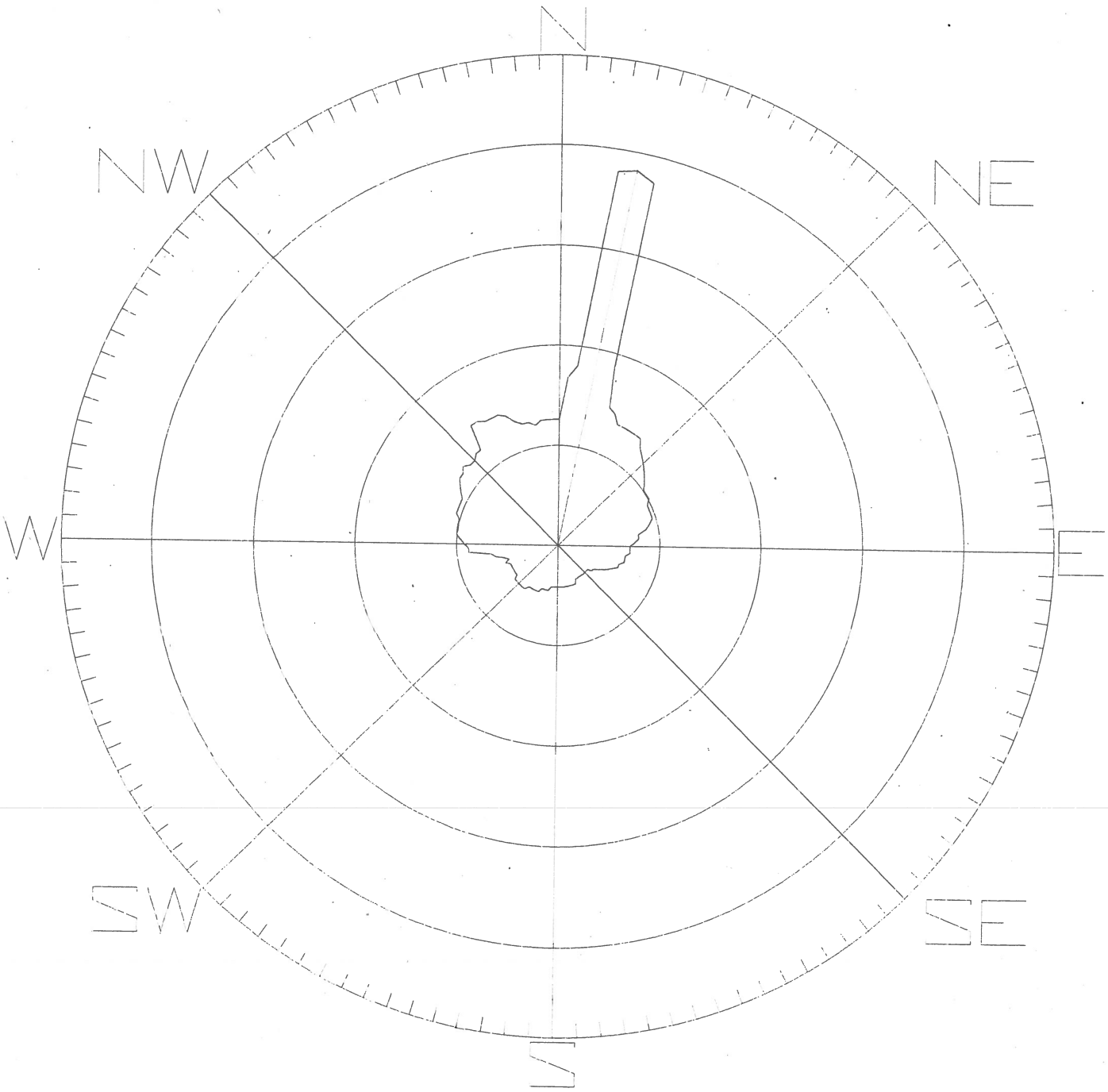


1 inch = 3.0 ft.

9 8 7 6 5 4 3 2 1 0 1 2 3 4 5 6 7 8 9

LENAPE RESOURCES
CALEDONIA, NY
LC RANOUS #1, WELL #73
Depth= 665.0 ft Tilt=0degs

# SONARWIRE, INC

**Range vs Bearing**

Max Radius 1.8 ft @ 225.0 deg
Tue, Oct 20, 2009

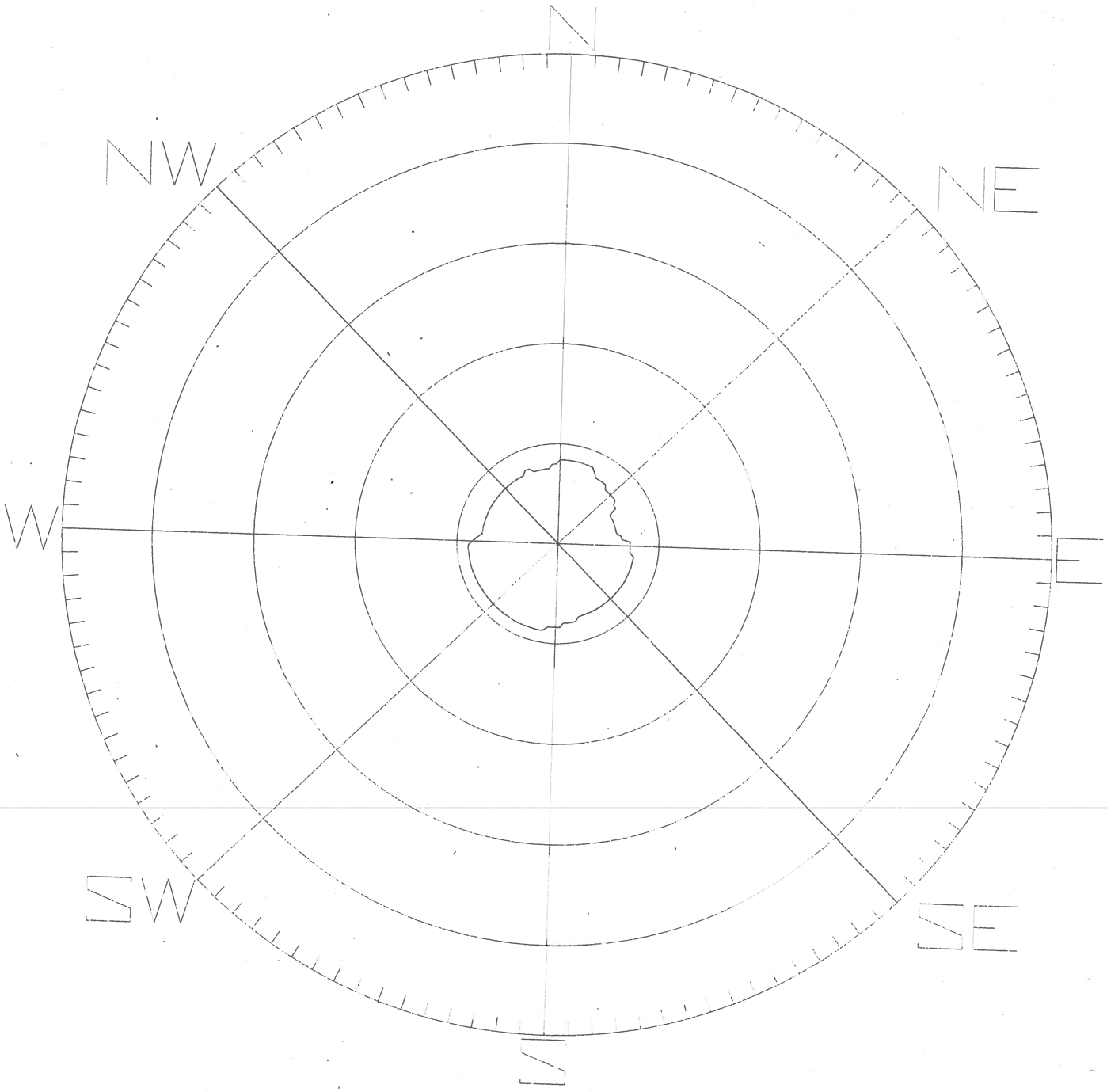


1 inch = 3.0 ft.

9 8 7 6 5 4 3 2 1 0 1 2 3 4 5 6 7 8 9

LENAPE RESOURCES
CALEDONIA, NY
LC RANOUS #1, WELL #73
Depth= 666.0 ft Tilt=0degs

# SONARWIRE, INC

**Range vs Bearing**

Max Radius 1.0 ft @ 222.2 deg
Tue, Oct 20, 2009

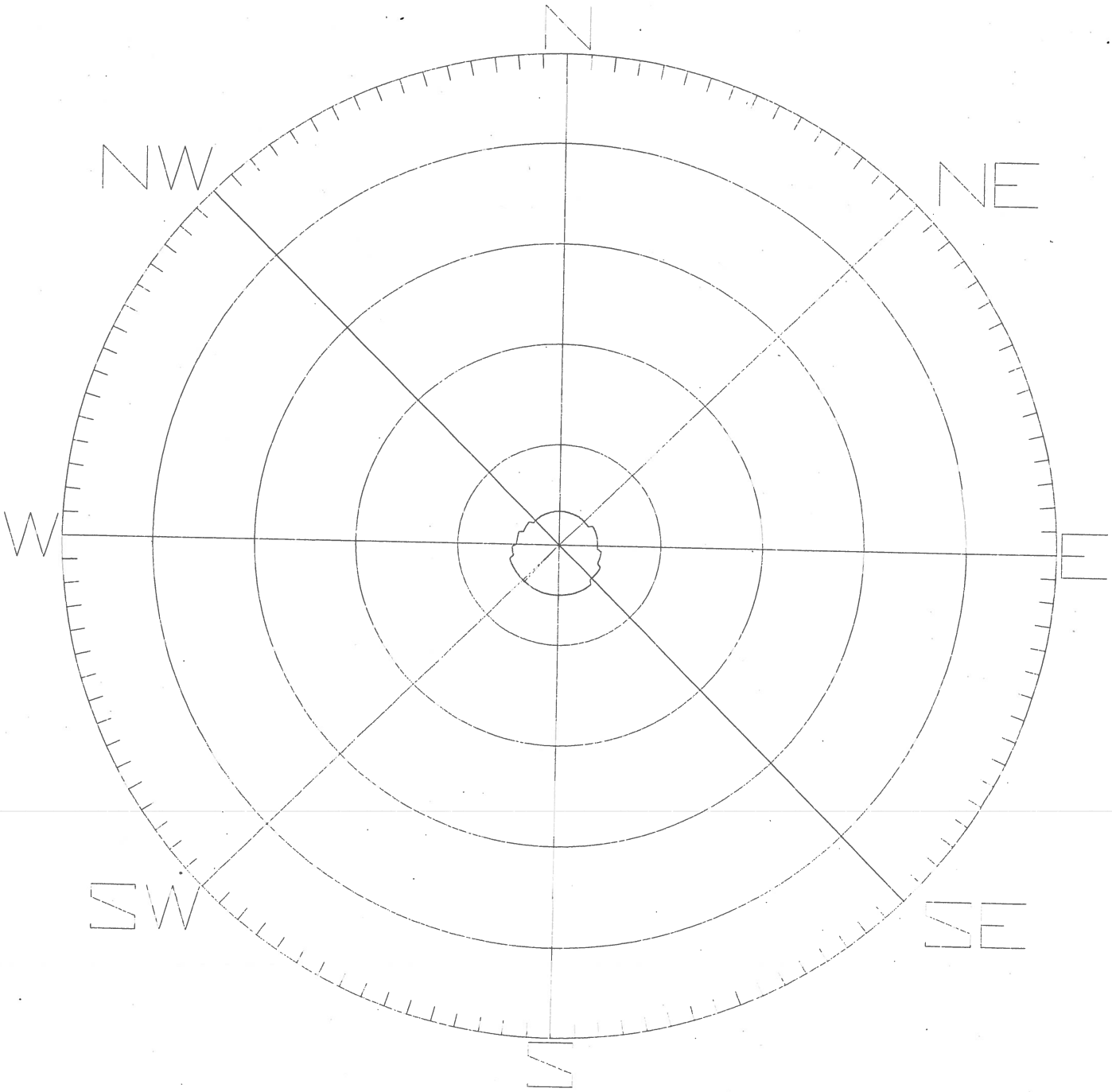


1 inch = 3.0 ft.

9 8 7 6 5 4 3 2 1 0 1 2 3 4 5 6 7 8 9

LENAPE RESOURCES
LC RANOUS #1, WELL #73

# SONARWIRE, INC
## Vertical Cross Section

CALEDONIA, NY
Tue, Oct 20, 2009

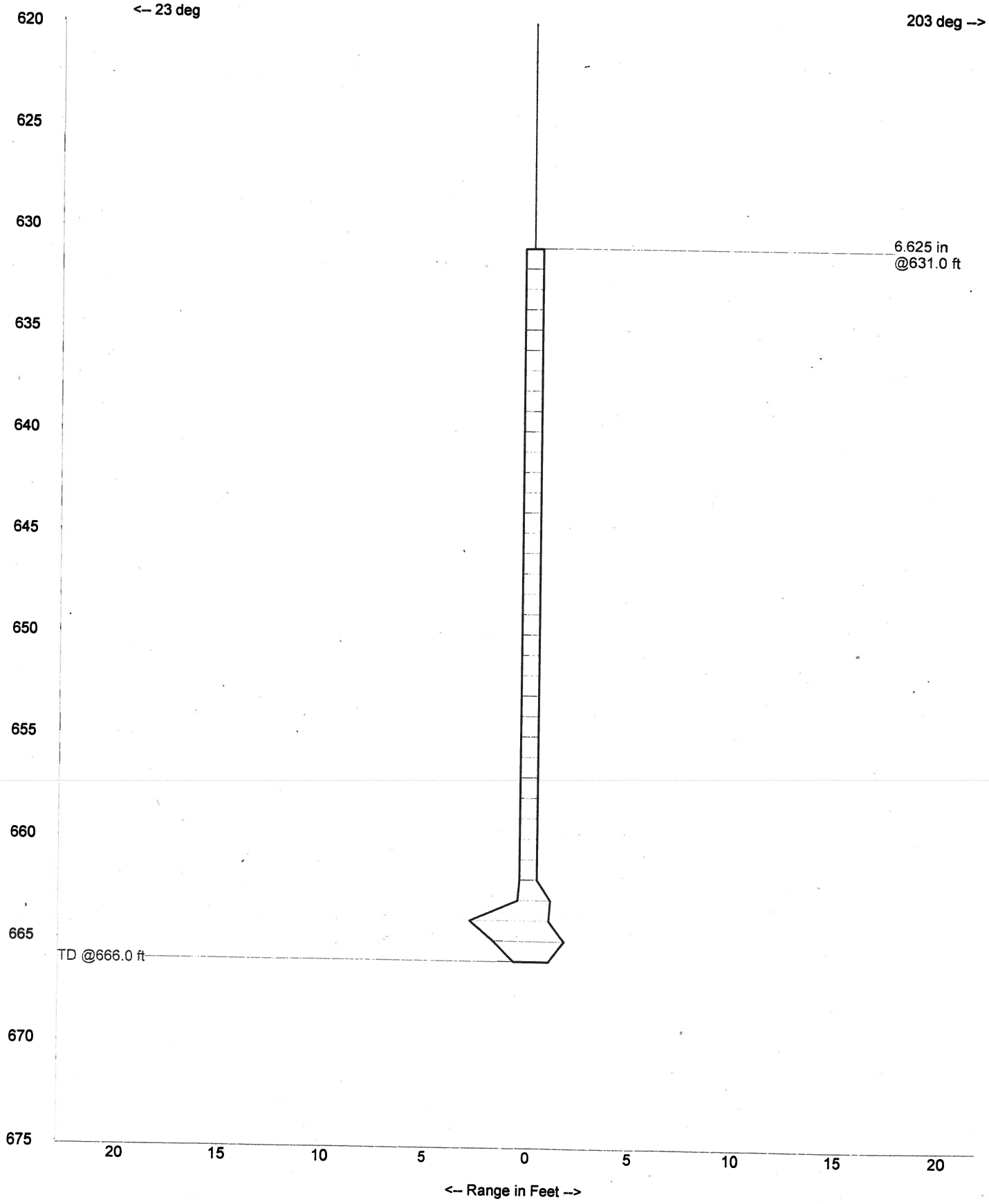

LENAPE RESOURCES
LC RANOUS #1, WELL #73

# SONARWIRE, INC
## Vertical Cross Section

CALEDONIA, NY
Tue, Oct 20, 2009

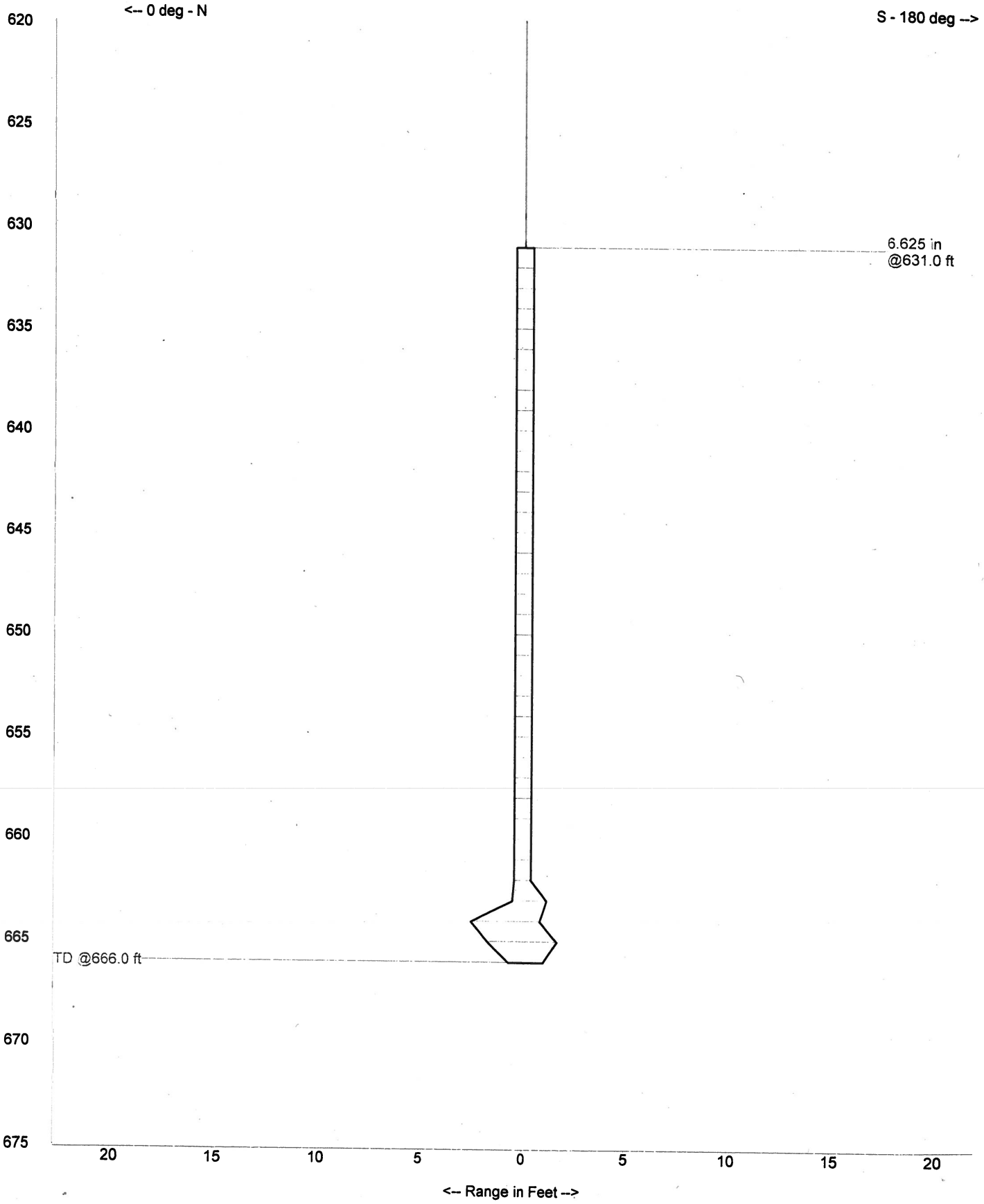

LENAPE RESOURCES
LC RANOUS #1, WELL #73

# SONARWIRE, INC
## Vertical Cross Section

CALEDONIA, NY
Tue. Oct 20, 2009

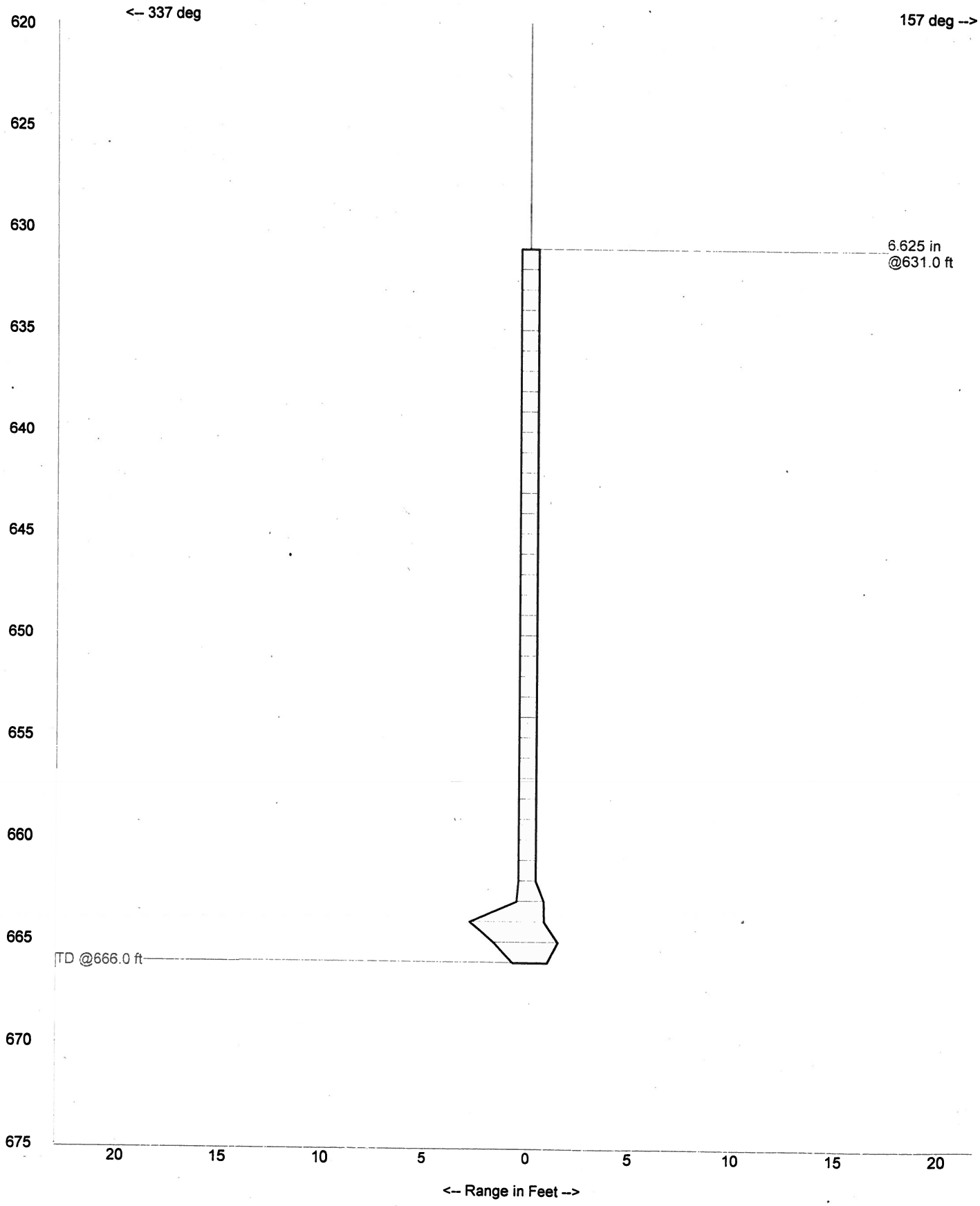

LENAPE RESOURCES
LC RANOUS #1, WELL #73

# SONARWIRE, INC
## Vertical Cross Section

CALEDONIA, NY
Tue, Oct 20, 2009

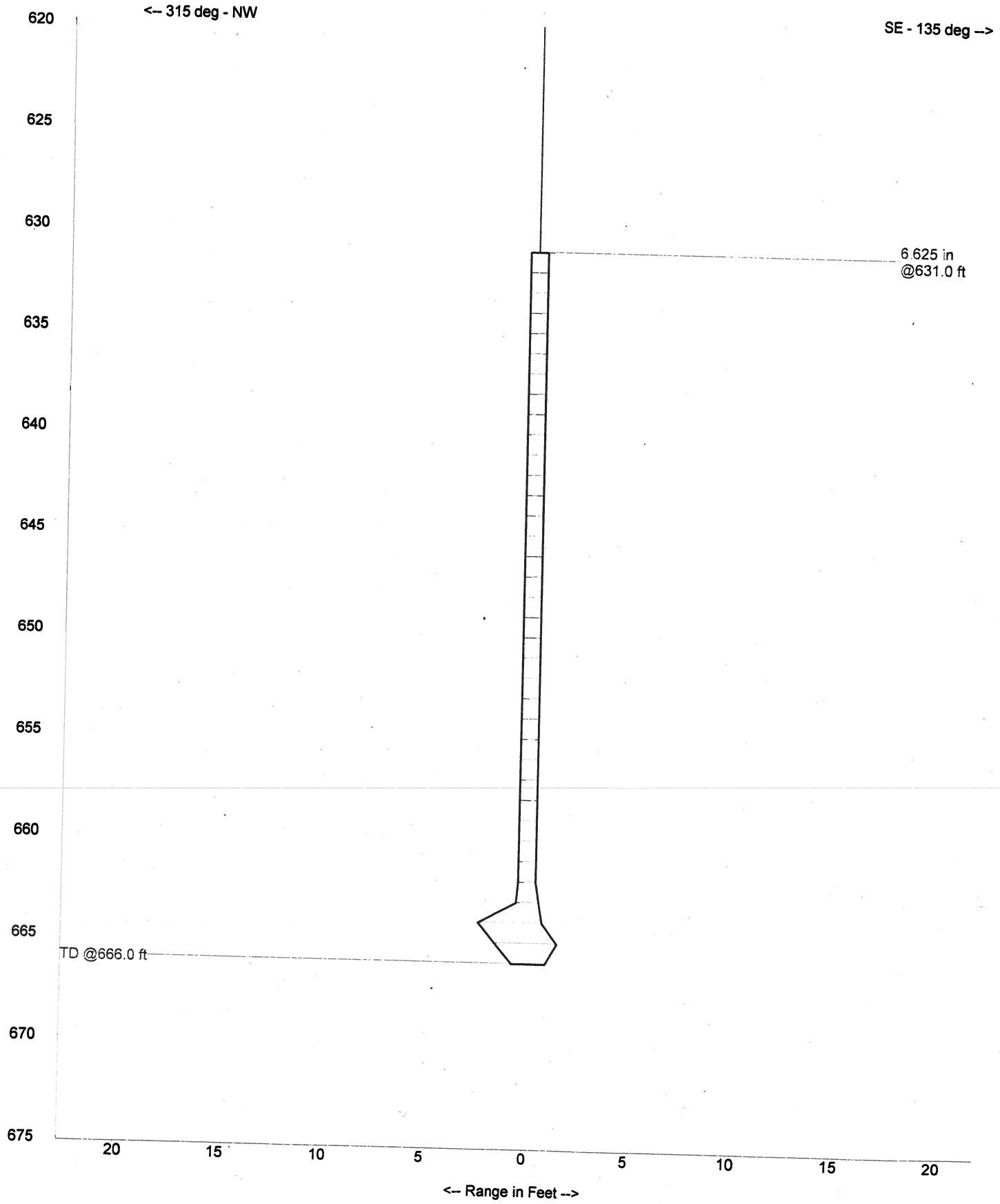

LENAPE RESOURCES
LC RANOUS #1, WELL #73

# SONARWIRE, INC
## Vertical Cross Section

CALEDONIA, NY
Tue, Oct 20, 2009

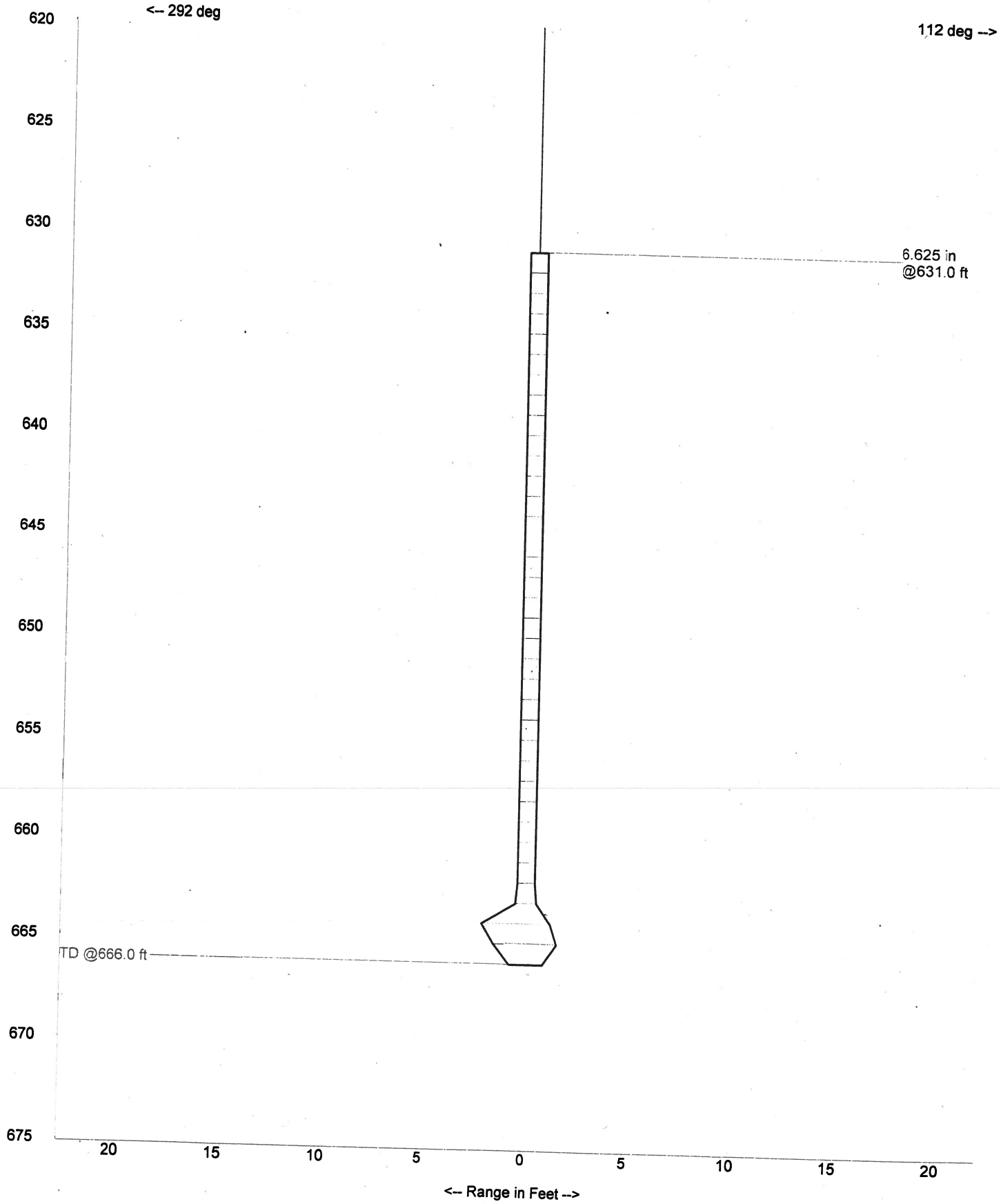

LENAPE RESOURCES
LC RANOUS #1, WELL #73

# SONARWIRE, INC
## Vertical Cross Section

CALEDONIA, NY
Tue, Oct 20, 2009

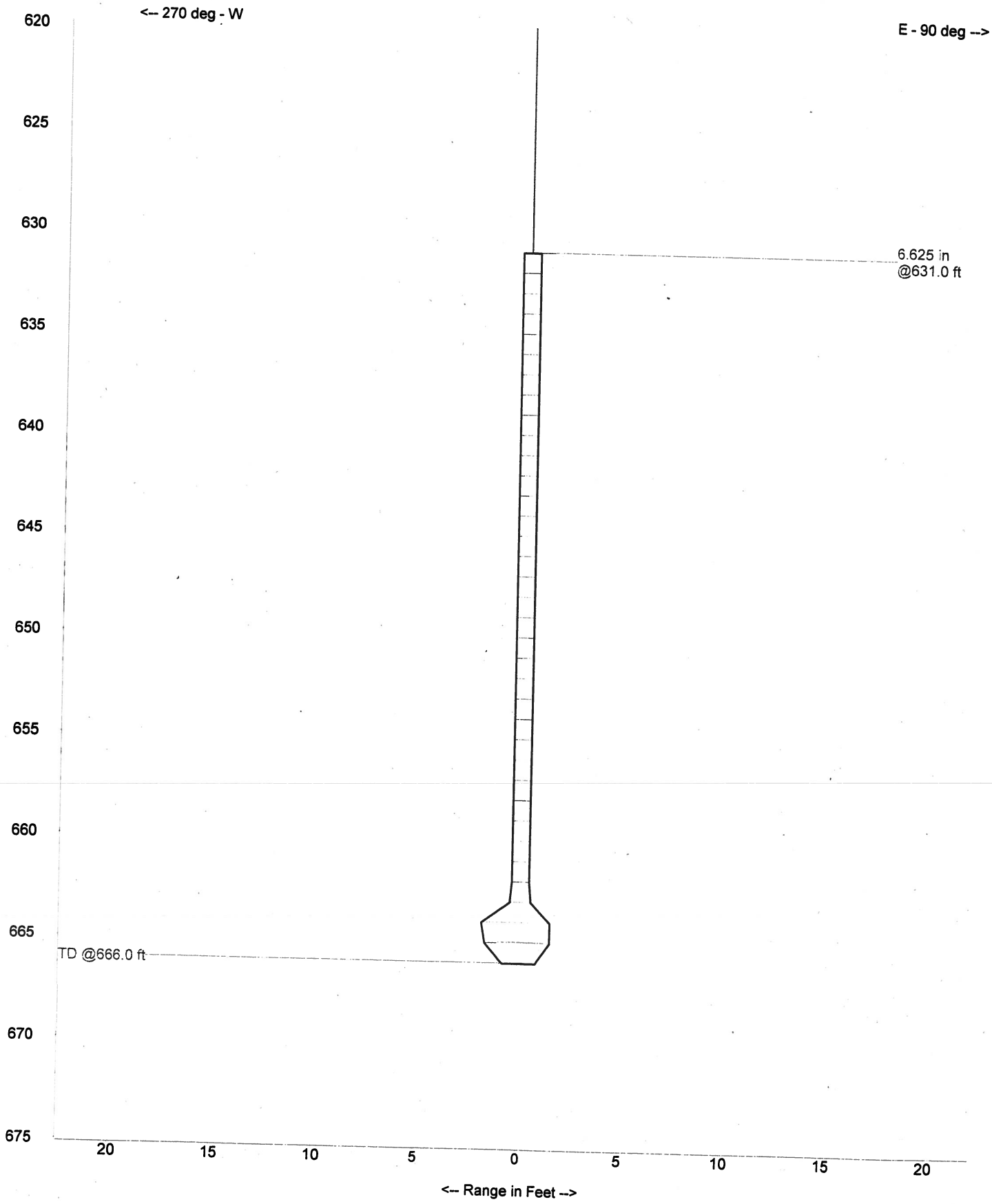

LENAPE RESOURCES
LC RANOUS #1, WELL #73

# SONARWIRE, INC
## Vertical Cross Section

CALEDONIA, NY
Tue. Oct 20, 2009

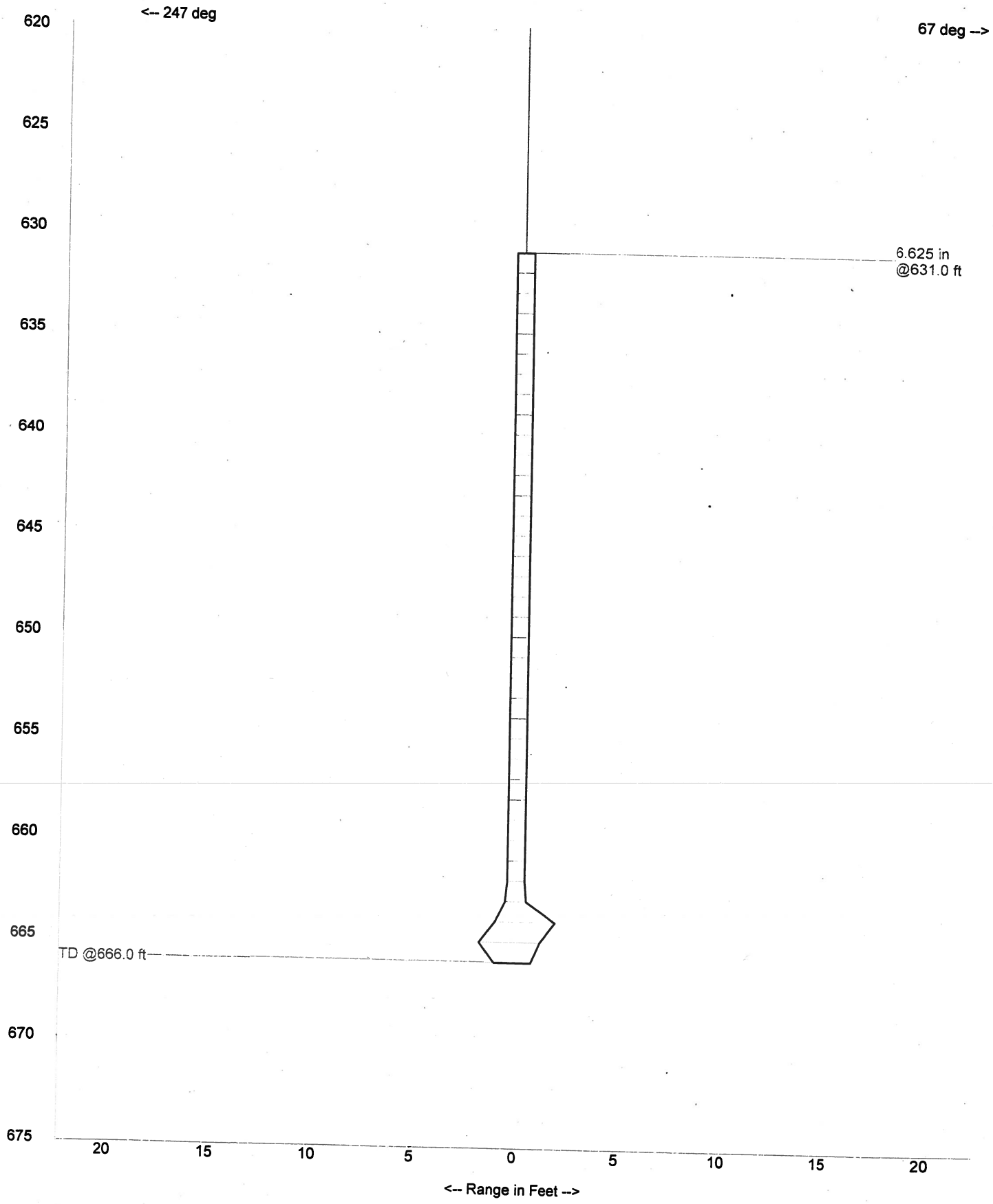

LENAPE RESOURCES
LC RANOUS #1, WELL #73

# SONARWIRE, INC
## Vertical Cross Section

CALEDONIA, NY
Tue. Oct 20, 2009

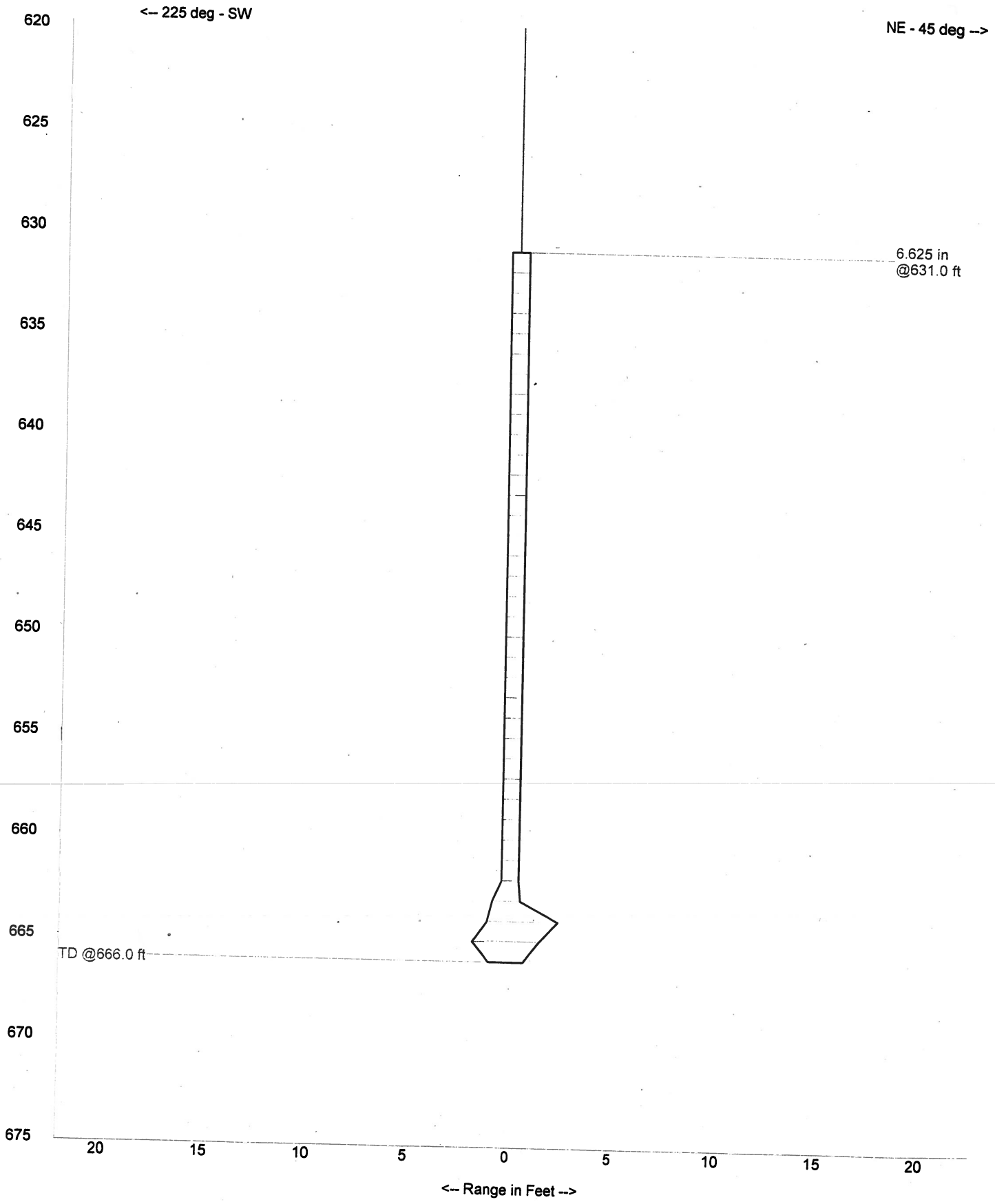

SONARWIRE INC.
Wall Ranges versus Depth (ft.)

LENAPE RESOURCES
LC RANOUS #1, WELL #73

CALEDONIA, NY
Tue, Oct 20, 2009

DEPTH: 631 TILT: 0 RANGE: 19.9 VOS: 5636

| Bearing | + 0.0 | + 2.8 | + 5.6 | + 8.4 | +11.3 | +14.1 | +16.9 | +19.7 |
|---|---|---|---|---|---|---|---|---|
| 0.0 | 0.4 | 0.4 | 0.4 | 0.4 | 0.4 | 0.4 | 0.4 | 0.4 |
| 22.5 | 0.4 | 0.4 | 0.4 | 0.4 | 0.4 | 0.4 | 0.4 | 0.4 |
| 45.0 | 0.4 | 0.4 | 0.4 | 0.4 | 0.4 | 0.4 | 0.4 | 0.4 |
| 67.5 | 0.4 | 0.4 | 0.4 | 0.4 | 0.4 | 0.4 | 0.4 | 0.4 |
| 90.0 | 0.4 | 0.4 | 0.4 | 0.4 | 0.4 | 0.4 | 0.4 | 0.4 |
| 112.5 | 0.4 | 0.4 | 0.4 | 0.4 | 0.4 | 0.4 | 0.4 | 0.4 |
| 135.0 | 0.4 | 0.4 | 0.4 | 0.4 | 0.4 | 0.4 | 0.4 | 0.4 |
| 157.5 | 0.4 | 0.4 | 0.4 | 0.4 | 0.4 | 0.4 | 0.4 | 0.4 |
| 180.0 | 0.4 | 0.4 | 0.4 | 0.4 | 0.4 | 0.4 | 0.4 | 0.4 |
| 202.5 | 0.4 | 0.4 | 0.4 | 0.4 | 0.4 | 0.4 | 0.4 | 0.4 |
| 225.0 | 0.4 | 0.4 | 0.4 | 0.4 | 0.4 | 0.4 | 0.4 | 0.4 |
| 247.5 | 0.4 | 0.4 | 0.4 | 0.4 | 0.4 | 0.4 | 0.4 | 0.4 |
| 270.0 | 0.4 | 0.4 | 0.4 | 0.4 | 0.4 | 0.4 | 0.4 | 0.4 |
| 292.5 | 0.4 | 0.4 | 0.4 | 0.4 | 0.4 | 0.4 | 0.4 | 0.4 |
| 315.0 | 0.4 | 0.4 | 0.4 | 0.4 | 0.4 | 0.4 | 0.4 | 0.4 |
| 337.5 | 0.4 | 0.4 | 0.4 | 0.4 | 0.4 | 0.4 | 0.4 | 0.4 |

DEPTH: 632 TILT: 0 RANGE: 19.9 VOS: 5639

| Bearing | + 0.0 | + 2.8 | + 5.6 | + 8.4 | +11.3 | +14.1 | +16.9 | +19.7 |
|---|---|---|---|---|---|---|---|---|
| 0.0 | 0.4 | 0.4 | 0.4 | 0.4 | 0.4 | 0.4 | 0.4 | 0.4 |
| 22.5 | 0.4 | 0.4 | 0.4 | 0.4 | 0.4 | 0.4 | 0.4 | 0.4 |
| 45.0 | 0.4 | 0.4 | 0.4 | 0.4 | 0.4 | 0.4 | 0.4 | 0.4 |
| 67.5 | 0.4 | 0.4 | 0.4 | 0.4 | 0.4 | 0.4 | 0.4 | 0.4 |
| 90.0 | 0.4 | 0.4 | 0.4 | 0.4 | 0.4 | 0.4 | 0.4 | 0.4 |
| 112.5 | 0.4 | 0.4 | 0.4 | 0.4 | 0.4 | 0.4 | 0.4 | 0.4 |
| 135.0 | 0.4 | 0.4 | 0.4 | 0.4 | 0.4 | 0.4 | 0.4 | 0.4 |
| 157.5 | 0.4 | 0.4 | 0.4 | 0.4 | 0.4 | 0.4 | 0.4 | 0.4 |
| 180.0 | 0.4 | 0.4 | 0.4 | 0.4 | 0.4 | 0.4 | 0.4 | 0.4 |
| 202.5 | 0.4 | 0.4 | 0.4 | 0.4 | 0.4 | 0.4 | 0.4 | 0.4 |
| 225.0 | 0.4 | 0.4 | 0.4 | 0.4 | 0.4 | 0.4 | 0.4 | 0.4 |
| 247.5 | 0.4 | 0.4 | 0.4 | 0.4 | 0.4 | 0.4 | 0.4 | 0.4 |
| 270.0 | 0.4 | 0.4 | 0.4 | 0.4 | 0.4 | 0.4 | 0.4 | 0.4 |
| 292.5 | 0.4 | 0.4 | 0.4 | 0.4 | 0.4 | 0.4 | 0.4 | 0.4 |
| 315.0 | 0.4 | 0.4 | 0.4 | 0.4 | 0.4 | 0.4 | 0.4 | 0.4 |
| 337.5 | 0.4 | 0.4 | 0.4 | 0.4 | 0.4 | 0.4 | 0.4 | 0.4 |

DEPTH: 633 TILT: 0 RANGE: 19.9 VOS: 5686

| Bearing | + 0.0 | + 2.8 | + 5.6 | + 8.4 | +11.3 | +14.1 | +16.9 | +19.7 |
|---|---|---|---|---|---|---|---|---|
| 0.0 | 0.4 | 0.4 | 0.4 | 0.4 | 0.4 | 0.4 | 0.4 | 0.4 |
| 22.5 | 0.4 | 0.4 | 0.4 | 0.4 | 0.4 | 0.4 | 0.4 | 0.4 |
| 45.0 | 0.4 | 0.4 | 0.4 | 0.4 | 0.4 | 0.4 | 0.4 | 0.4 |
| 67.5 | 0.4 | 0.4 | 0.4 | 0.4 | 0.4 | 0.4 | 0.4 | 0.4 |
| 90.0 | 0.4 | 0.4 | 0.4 | 0.4 | 0.4 | 0.4 | 0.4 | 0.4 |
| 112.5 | 0.4 | 0.4 | 0.4 | 0.4 | 0.4 | 0.4 | 0.4 | 0.4 |
| 135.0 | 0.4 | 0.4 | 0.4 | 0.4 | 0.4 | 0.4 | 0.4 | 0.4 |
| 157.5 | 0.4 | 0.4 | 0.4 | 0.4 | 0.4 | 0.4 | 0.4 | 0.4 |
| 180.0 | 0.4 | 0.4 | 0.4 | 0.4 | 0.4 | 0.4 | 0.4 | 0.4 |
| 202.5 | 0.4 | 0.4 | 0.4 | 0.4 | 0.4 | 0.4 | 0.4 | 0.4 |
| 225.0 | 0.4 | 0.4 | 0.4 | 0.4 | 0.4 | 0.4 | 0.4 | 0.4 |
| 247.5 | 0.4 | 0.4 | 0.4 | 0.4 | 0.4 | 0.4 | 0.4 | 0.4 |
| 270.0 | 0.4 | 0.4 | 0.4 | 0.4 | 0.4 | 0.4 | 0.4 | 0.4 |
| 292.5 | 0.4 | 0.4 | 0.4 | 0.4 | 0.4 | 0.4 | 0.4 | 0.4 |
| 315.0 | 0.4 | 0.4 | 0.4 | 0.4 | 0.4 | 0.4 | 0.4 | 0.4 |
| 337.5 | 0.4 | 0.4 | 0.4 | 0.4 | 0.4 | 0.4 | 0.4 | 0.4 |

DEPTH: 634 TILT: 0 RANGE: 19.9 VOS: 5686

| Bearing | + 0.0 | + 2.8 | + 5.6 | + 8.4 | +11.3 | +14.1 | +16.9 | +19.7 |
|---|---|---|---|---|---|---|---|---|
| 0.0 | 0.4 | 0.4 | 0.4 | 0.4 | 0.4 | 0.4 | 0.4 | 0.4 |
| 22.5 | 0.4 | 0.4 | 0.4 | 0.4 | 0.4 | 0.4 | 0.4 | 0.4 |
| 45.0 | 0.4 | 0.4 | 0.4 | 0.4 | 0.4 | 0.4 | 0.4 | 0.4 |
| 67.5 | 0.4 | 0.4 | 0.4 | 0.4 | 0.4 | 0.4 | 0.4 | 0.4 |
| 90.0 | 0.4 | 0.4 | 0.4 | 0.4 | 0.4 | 0.4 | 0.4 | 0.4 |
| 112.5 | 0.4 | 0.4 | 0.4 | 0.4 | 0.4 | 0.4 | 0.4 | 0.4 |
| 135.0 | 0.4 | 0.4 | 0.4 | 0.4 | 0.4 | 0.4 | 0.4 | 0.4 |
| 157.5 | 0.4 | 0.4 | 0.4 | 0.4 | 0.4 | 0.4 | 0.4 | 0.4 |
| 180.0 | 0.4 | 0.4 | 0.4 | 0.4 | 0.4 | 0.4 | 0.4 | 0.4 |
| 202.5 | 0.4 | 0.4 | 0.4 | 0.4 | 0.4 | 0.4 | 0.4 | 0.4 |
| 225.0 | 0.4 | 0.4 | 0.4 | 0.4 | 0.4 | 0.4 | 0.4 | 0.4 |
| 247.5 | 0.4 | 0.4 | 0.4 | 0.4 | 0.4 | 0.4 | 0.4 | 0.4 |
| 270.0 | 0.4 | 0.4 | 0.4 | 0.4 | 0.4 | 0.4 | 0.4 | 0.4 |
| 292.5 | 0.4 | 0.4 | 0.4 | 0.4 | 0.4 | 0.4 | 0.4 | 0.4 |
| 315.0 | 0.4 | 0.4 | 0.4 | 0.4 | 0.4 | 0.4 | 0.4 | 0.4 |
| 337.5 | 0.4 | 0.4 | 0.4 | 0.4 | 0.4 | 0.4 | 0.4 | 0.4 |

DEPTH: 635 TILT: 0 RANGE: 19.9 VOS: 5686

| Bearing | + 0.0 | + 2.8 | + 5.6 | + 8.4 | +11.3 | +14.1 | +16.9 | +19.7 |
|---|---|---|---|---|---|---|---|---|
| 0.0 | 0.4 | 0.4 | 0.4 | 0.4 | 0.4 | 0.4 | 0.4 | 0.4 |
| 22.5 | 0.4 | 0.4 | 0.4 | 0.4 | 0.4 | 0.4 | 0.4 | 0.4 |
| 45.0 | 0.4 | 0.4 | 0.4 | 0.4 | 0.4 | 0.4 | 0.4 | 0.4 |
| 67.5 | 0.4 | 0.4 | 0.4 | 0.4 | 0.4 | 0.4 | 0.4 | 0.4 |
| 90.0 | 0.4 | 0.4 | 0.4 | 0.4 | 0.4 | 0.4 | 0.4 | 0.4 |
| 112.5 | 0.4 | 0.4 | 0.4 | 0.4 | 0.4 | 0.4 | 0.4 | 0.4 |
| 135.0 | 0.4 | 0.4 | 0.4 | 0.4 | 0.4 | 0.4 | 0.4 | 0.4 |
| 157.5 | 0.4 | 0.4 | 0.4 | 0.4 | 0.4 | 0.4 | 0.4 | 0.4 |
| 180.0 | 0.4 | 0.4 | 0.4 | 0.4 | 0.4 | 0.4 | 0.4 | 0.4 |
| 202.5 | 0.4 | 0.4 | 0.4 | 0.4 | 0.4 | 0.4 | 0.4 | 0.4 |
| 225.0 | 0.4 | 0.4 | 0.4 | 0.4 | 0.4 | 0.4 | 0.4 | 0.4 |
| 247.5 | 0.4 | 0.4 | 0.4 | 0.4 | 0.4 | 0.4 | 0.4 | 0.4 |
| 270.0 | 0.4 | 0.4 | 0.4 | 0.4 | 0.4 | 0.4 | 0.4 | 0.4 |
| 292.5 | 0.4 | 0.4 | 0.4 | 0.4 | 0.4 | 0.4 | 0.4 | 0.4 |
| 315.0 | 0.4 | 0.4 | 0.4 | 0.4 | 0.4 | 0.4 | 0.4 | 0.4 |
| 337.5 | 0.4 | 0.4 | 0.4 | 0.4 | 0.4 | 0.4 | 0.4 | 0.4 |

DEPTH: 636 TILT: 0 RANGE: 19.9 VOS: 5686

| Bearing | + 0.0 | + 2.8 | + 5.6 | + 8.4 | +11.3 | +14.1 | +16.9 | +19.7 |
|---|---|---|---|---|---|---|---|---|
| 0.0 | 0.4 | 0.4 | 0.4 | 0.4 | 0.4 | 0.4 | 0.4 | 0.4 |
| 22.5 | 0.4 | 0.4 | 0.4 | 0.4 | 0.4 | 0.4 | 0.4 | 0.4 |
| 45.0 | 0.4 | 0.4 | 0.4 | 0.4 | 0.4 | 0.4 | 0.4 | 0.4 |
| 67.5 | 0.4 | 0.4 | 0.4 | 0.4 | 0.4 | 0.4 | 0.4 | 0.4 |
| 90.0 | 0.4 | 0.4 | 0.4 | 0.4 | 0.4 | 0.4 | 0.4 | 0.4 |
| 112.5 | 0.4 | 0.4 | 0.4 | 0.4 | 0.4 | 0.4 | 0.4 | 0.4 |
| 135.0 | 0.4 | 0.4 | 0.4 | 0.4 | 0.4 | 0.4 | 0.4 | 0.4 |
| 157.5 | 0.4 | 0.4 | 0.4 | 0.4 | 0.4 | 0.4 | 0.4 | 0.4 |
| 180.0 | 0.4 | 0.4 | 0.4 | 0.4 | 0.4 | 0.4 | 0.4 | 0.4 |
| 202.5 | 0.4 | 0.4 | 0.4 | 0.4 | 0.4 | 0.4 | 0.4 | 0.4 |
| 225.0 | 0.4 | 0.4 | 0.4 | 0.4 | 0.4 | 0.4 | 0.4 | 0.4 |
| 247.5 | 0.4 | 0.4 | 0.4 | 0.4 | 0.4 | 0.4 | 0.4 | 0.4 |
| 270.0 | 0.4 | 0.4 | 0.4 | 0.4 | 0.4 | 0.4 | 0.4 | 0.4 |
| 292.5 | 0.4 | 0.4 | 0.4 | 0.4 | 0.4 | 0.4 | 0.4 | 0.4 |
| 315.0 | 0.4 | 0.4 | 0.4 | 0.4 | 0.4 | 0.4 | 0.4 | 0.4 |
| 337.5 | 0.4 | 0.4 | 0.4 | 0.4 | 0.4 | 0.4 | 0.4 | 0.4 |

DEPTH: 637 TILT: 0 RANGE: 19.9 VOS: 5686

| Bearing | + 0.0 | + 2.8 | + 5.6 | + 8.4 | +11.3 | +14.1 | +16.9 | +19.7 |
|---|---|---|---|---|---|---|---|---|
| 0.0 | 0.4 | 0.4 | 0.4 | 0.4 | 0.4 | 0.4 | 0.4 | 0.4 |
| 22.5 | 0.4 | 0.4 | 0.4 | 0.4 | 0.4 | 0.4 | 0.4 | 0.4 |
| 45.0 | 0.4 | 0.4 | 0.4 | 0.4 | 0.4 | 0.4 | 0.4 | 0.4 |
| 67.5 | 0.4 | 0.4 | 0.4 | 0.4 | 0.4 | 0.4 | 0.4 | 0.4 |
| 90.0 | 0.4 | 0.4 | 0.4 | 0.4 | 0.4 | 0.4 | 0.4 | 0.4 |
| 112.5 | 0.4 | 0.4 | 0.4 | 0.4 | 0.4 | 0.4 | 0.4 | 0.4 |
| 135.0 | 0.4 | 0.4 | 0.4 | 0.4 | 0.4 | 0.4 | 0.4 | 0.4 |
| 157.5 | 0.4 | 0.4 | 0.4 | 0.4 | 0.4 | 0.4 | 0.4 | 0.4 |
| 180.0 | 0.4 | 0.4 | 0.4 | 0.4 | 0.4 | 0.4 | 0.4 | 0.4 |
| 202.5 | 0.4 | 0.4 | 0.4 | 0.4 | 0.4 | 0.4 | 0.4 | 0.4 |
| 225.0 | 0.4 | 0.4 | 0.4 | 0.4 | 0.4 | 0.4 | 0.4 | 0.4 |
| 247.5 | 0.4 | 0.4 | 0.4 | 0.4 | 0.4 | 0.4 | 0.4 | 0.4 |
| 270.0 | 0.4 | 0.4 | 0.4 | 0.4 | 0.4 | 0.4 | 0.4 | 0.4 |
| 292.5 | 0.4 | 0.4 | 0.4 | 0.4 | 0.4 | 0.4 | 0.4 | 0.4 |
| 315.0 | 0.4 | 0.4 | 0.4 | 0.4 | 0.4 | 0.4 | 0.4 | 0.4 |
| 337.5 | 0.4 | 0.4 | 0.4 | 0.4 | 0.4 | 0.4 | 0.4 | 0.4 |

DEPTH: 638 TILT: 0 RANGE: 19.9 VOS: 5634

| Bearing | + 0.0 | + 2.8 | + 5.6 | + 8.4 | +11.3 | +14.1 | +16.9 | +19.7 |
|---|---|---|---|---|---|---|---|---|
| 0.0 | 0.4 | 0.4 | 0.4 | 0.4 | 0.4 | 0.4 | 0.4 | 0.4 |
| 22.5 | 0.4 | 0.4 | 0.4 | 0.4 | 0.4 | 0.4 | 0.4 | 0.4 |
| 45.0 | 0.4 | 0.4 | 0.4 | 0.4 | 0.4 | 0.4 | 0.4 | 0.4 |
| 67.5 | 0.4 | 0.4 | 0.4 | 0.4 | 0.4 | 0.4 | 0.4 | 0.4 |
| 90.0 | 0.4 | 0.4 | 0.4 | 0.4 | 0.4 | 0.4 | 0.4 | 0.4 |
| 112.5 | 0.4 | 0.4 | 0.4 | 0.4 | 0.4 | 0.4 | 0.4 | 0.4 |
| 135.0 | 0.4 | 0.4 | 0.4 | 0.4 | 0.4 | 0.4 | 0.4 | 0.4 |
| 157.5 | 0.4 | 0.4 | 0.4 | 0.4 | 0.4 | 0.4 | 0.4 | 0.4 |
| 180.0 | 0.4 | 0.4 | 0.4 | 0.4 | 0.4 | 0.4 | 0.4 | 0.4 |
| 202.5 | 0.4 | 0.4 | 0.4 | 0.4 | 0.4 | 0.4 | 0.4 | 0.4 |
| 225.0 | 0.4 | 0.4 | 0.4 | 0.4 | 0.4 | 0.4 | 0.4 | 0.4 |
| 247.5 | 0.4 | 0.4 | 0.4 | 0.4 | 0.4 | 0.4 | 0.4 | 0.4 |
| 270.0 | 0.4 | 0.4 | 0.4 | 0.4 | 0.4 | 0.4 | 0.4 | 0.4 |
| 292.5 | 0.4 | 0.4 | 0.4 | 0.4 | 0.4 | 0.4 | 0.4 | 0.4 |
| 315.0 | 0.4 | 0.4 | 0.4 | 0.4 | 0.4 | 0.4 | 0.4 | 0.4 |
| 337.5 | 0.4 | 0.4 | 0.4 | 0.4 | 0.4 | 0.4 | 0.4 | 0.4 |

DEPTH: 639 TILT: 0 RANGE: 19.9 VOS: 5634

| Bearing | + 0.0 | + 2.8 | + 5.6 | + 8.4 | +11.3 | +14.1 | +16.9 | +19.7 |
|---|---|---|---|---|---|---|---|---|
| 0.0 | 0.4 | 0.4 | 0.4 | 0.4 | 0.4 | 0.4 | 0.4 | 0.4 |
| 22.5 | 0.4 | 0.4 | 0.4 | 0.4 | 0.4 | 0.4 | 0.4 | 0.4 |
| 45.0 | 0.4 | 0.4 | 0.4 | 0.4 | 0.4 | 0.4 | 0.4 | 0.4 |
| 67.5 | 0.4 | 0.4 | 0.4 | 0.4 | 0.4 | 0.4 | 0.4 | 0.4 |
| 90.0 | 0.4 | 0.4 | 0.4 | 0.4 | 0.4 | 0.4 | 0.4 | 0.4 |
| 112.5 | 0.4 | 0.4 | 0.4 | 0.4 | 0.4 | 0.4 | 0.4 | 0.4 |
| 135.0 | 0.4 | 0.4 | 0.4 | 0.4 | 0.4 | 0.4 | 0.4 | 0.4 |
| 157.5 | 0.4 | 0.4 | 0.4 | 0.4 | 0.4 | 0.4 | 0.4 | 0.4 |
| 180.0 | 0.4 | 0.4 | 0.4 | 0.4 | 0.4 | 0.4 | 0.4 | 0.4 |
| 202.5 | 0.4 | 0.4 | 0.4 | 0.4 | 0.4 | 0.4 | 0.4 | 0.4 |
| 225.0 | 0.4 | 0.4 | 0.4 | 0.4 | 0.4 | 0.4 | 0.4 | 0.4 |
| 247.5 | 0.4 | 0.4 | 0.4 | 0.4 | 0.4 | 0.4 | 0.4 | 0.4 |
| 270.0 | 0.4 | 0.4 | 0.4 | 0.4 | 0.4 | 0.4 | 0.4 | 0.4 |
| 292.5 | 0.4 | 0.4 | 0.4 | 0.4 | 0.4 | 0.4 | 0.4 | 0.4 |
| 315.0 | 0.4 | 0.4 | 0.4 | 0.4 | 0.4 | 0.4 | 0.4 | 0.4 |
| 337.5 | 0.4 | 0.4 | 0.4 | 0.4 | 0.4 | 0.4 | 0.4 | 0.4 |

DEPTH: 640 TILT: 0 RANGE: 19.9 VOS: 5634

| Bearing | + 0.0 | + 2.8 | + 5.6 | + 8.4 | +11.3 | +14.1 | +16.9 | +19.7 |
|---|---|---|---|---|---|---|---|---|
| 0.0 | 0.4 | 0.4 | 0.4 | 0.4 | 0.4 | 0.4 | 0.4 | 0.4 |
| 22.5 | 0.4 | 0.4 | 0.4 | 0.4 | 0.4 | 0.4 | 0.4 | 0.4 |
| 45.0 | 0.4 | 0.4 | 0.4 | 0.4 | 0.4 | 0.4 | 0.4 | 0.4 |
| 67.5 | 0.4 | 0.4 | 0.4 | 0.4 | 0.4 | 0.4 | 0.4 | 0.4 |
| 90.0 | 0.4 | 0.4 | 0.4 | 0.4 | 0.4 | 0.4 | 0.4 | 0.4 |
| 112.5 | 0.4 | 0.4 | 0.4 | 0.4 | 0.4 | 0.4 | 0.4 | 0.4 |
| 135.0 | 0.4 | 0.4 | 0.4 | 0.4 | 0.4 | 0.4 | 0.4 | 0.4 |
| 157.5 | 0.4 | 0.4 | 0.4 | 0.4 | 0.4 | 0.4 | 0.4 | 0.4 |
| 180.0 | 0.4 | 0.4 | 0.4 | 0.4 | 0.4 | 0.4 | 0.4 | 0.4 |
| 202.5 | 0.4 | 0.4 | 0.4 | 0.4 | 0.4 | 0.4 | 0.4 | 0.4 |
| 225.0 | 0.4 | 0.4 | 0.4 | 0.4 | 0.4 | 0.4 | 0.4 | 0.4 |
| 247.5 | 0.4 | 0.4 | 0.4 | 0.4 | 0.4 | 0.4 | 0.4 | 0.4 |
| 270.0 | 0.4 | 0.4 | 0.4 | 0.4 | 0.4 | 0.4 | 0.4 | 0.4 |
| 292.5 | 0.4 | 0.4 | 0.4 | 0.4 | 0.4 | 0.4 | 0.4 | 0.4 |
| 315.0 | 0.4 | 0.4 | 0.4 | 0.4 | 0.4 | 0.4 | 0.4 | 0.4 |
| 337.5 | 0.4 | 0.4 | 0.4 | 0.4 | 0.4 | 0.4 | 0.4 | 0.4 |

DEPTH: 641 TILT: 0 RANGE: 19.9 VOS: 5634

| Bearing | + 0.0 | + 2.8 | + 5.6 | + 8.4 | +11.3 | +14.1 | +16.9 | +19.7 |
|---|---|---|---|---|---|---|---|---|
| 0.0 | 0.4 | 0.4 | 0.4 | 0.4 | 0.4 | 0.4 | 0.4 | 0.4 |
| 22.5 | 0.4 | 0.4 | 0.4 | 0.4 | 0.4 | 0.4 | 0.4 | 0.4 |
| 45.0 | 0.4 | 0.4 | 0.4 | 0.4 | 0.4 | 0.4 | 0.4 | 0.4 |
| 67.5 | 0.4 | 0.4 | 0.4 | 0.4 | 0.4 | 0.4 | 0.4 | 0.4 |
| 90.0 | 0.4 | 0.4 | 0.4 | 0.4 | 0.4 | 0.4 | 0.4 | 0.4 |
| 112.5 | 0.4 | 0.4 | 0.4 | 0.4 | 0.4 | 0.4 | 0.4 | 0.4 |
| 135.0 | 0.4 | 0.4 | 0.4 | 0.4 | 0.4 | 0.4 | 0.4 | 0.4 |
| 157.5 | 0.4 | 0.4 | 0.4 | 0.4 | 0.4 | 0.4 | 0.4 | 0.4 |
| 180.0 | 0.4 | 0.4 | 0.4 | 0.4 | 0.4 | 0.4 | 0.4 | 0.4 |
| 202.5 | 0.4 | 0.4 | 0.4 | 0.4 | 0.4 | 0.4 | 0.4 | 0.4 |
| 225.0 | 0.4 | 0.4 | 0.4 | 0.4 | 0.4 | 0.4 | 0.4 | 0.4 |
| 247.5 | 0.4 | 0.4 | 0.4 | 0.4 | 0.4 | 0.4 | 0.4 | 0.4 |
| 270.0 | 0.4 | 0.4 | 0.4 | 0.4 | 0.4 | 0.4 | 0.4 | 0.4 |
| 292.5 | 0.4 | 0.4 | 0.4 | 0.4 | 0.4 | 0.4 | 0.4 | 0.4 |
| 315.0 | 0.4 | 0.4 | 0.4 | 0.4 | 0.4 | 0.4 | 0.4 | 0.4 |
| 337.5 | 0.4 | 0.4 | 0.4 | 0.4 | 0.4 | 0.4 | 0.4 | 0.4 |

DEPTH: 642 TILT: 0 RANGE: 19.9 VOS: 5634

| Bearing | + 0.0 | + 2.8 | + 5.6 | + 8.4 | +11.3 | +14.1 | +16.9 | +19.7 |
|---|---|---|---|---|---|---|---|---|
| 0.0 | 0.4 | 0.4 | 0.4 | 0.4 | 0.4 | 0.4 | 0.4 | 0.4 |
| 22.5 | 0.4 | 0.4 | 0.4 | 0.4 | 0.4 | 0.4 | 0.4 | 0.4 |
| 45.0 | 0.4 | 0.4 | 0.4 | 0.4 | 0.4 | 0.4 | 0.4 | 0.4 |
| 67.5 | 0.4 | 0.4 | 0.4 | 0.4 | 0.4 | 0.4 | 0.4 | 0.4 |
| 90.0 | 0.4 | 0.4 | 0.4 | 0.4 | 0.4 | 0.4 | 0.4 | 0.4 |
| 112.5 | 0.4 | 0.4 | 0.4 | 0.4 | 0.4 | 0.4 | 0.4 | 0.4 |
| 135.0 | 0.4 | 0.4 | 0.4 | 0.4 | 0.4 | 0.4 | 0.4 | 0.4 |
| 157.5 | 0.4 | 0.4 | 0.4 | 0.4 | 0.4 | 0.4 | 0.4 | 0.4 |
| 180.0 | 0.4 | 0.4 | 0.4 | 0.4 | 0.4 | 0.4 | 0.4 | 0.4 |
| 202.5 | 0.4 | 0.4 | 0.4 | 0.4 | 0.4 | 0.4 | 0.4 | 0.4 |
| 225.0 | 0.4 | 0.4 | 0.4 | 0.4 | 0.4 | 0.4 | 0.4 | 0.4 |
| 247.5 | 0.4 | 0.4 | 0.4 | 0.4 | 0.4 | 0.4 | 0.4 | 0.4 |
| 270.0 | 0.4 | 0.4 | 0.4 | 0.4 | 0.4 | 0.4 | 0.4 | 0.4 |
| 292.5 | 0.4 | 0.4 | 0.4 | 0.4 | 0.4 | 0.4 | 0.4 | 0.4 |
| 315.0 | 0.4 | 0.4 | 0.4 | 0.4 | 0.4 | 0.4 | 0.4 | 0.4 |
| 337.5 | 0.4 | 0.4 | 0.4 | 0.4 | 0.4 | 0.4 | 0.4 | 0.4 |

DEPTH: 643 TILT: 0 RANGE: 19.9 VOS: 5634

| Bearing | + 0.0 | + 2.8 | + 5.6 | + 8.4 | +11.3 | +14.1 | +16.9 | +19.7 |
|---|---|---|---|---|---|---|---|---|
| 0.0 | 0.4 | 0.4 | 0.4 | 0.4 | 0.4 | 0.4 | 0.4 | 0.4 |
| 22.5 | 0.4 | 0.4 | 0.4 | 0.4 | 0.4 | 0.4 | 0.4 | 0.4 |
| 45.0 | 0.4 | 0.4 | 0.4 | 0.4 | 0.4 | 0.4 | 0.4 | 0.4 |
| 67.5 | 0.4 | 0.4 | 0.4 | 0.4 | 0.4 | 0.4 | 0.4 | 0.4 |
| 90.0 | 0.4 | 0.4 | 0.4 | 0.4 | 0.4 | 0.4 | 0.4 | 0.4 |
| 112.5 | 0.4 | 0.4 | 0.4 | 0.4 | 0.4 | 0.4 | 0.4 | 0.4 |
| 135.0 | 0.4 | 0.4 | 0.4 | 0.4 | 0.4 | 0.4 | 0.4 | 0.4 |
| 157.5 | 0.4 | 0.4 | 0.4 | 0.4 | 0.4 | 0.4 | 0.4 | 0.4 |
| 180.0 | 0.4 | 0.4 | 0.4 | 0.4 | 0.4 | 0.4 | 0.4 | 0.4 |
| 202.5 | 0.4 | 0.4 | 0.4 | 0.4 | 0.4 | 0.4 | 0.4 | 0.4 |
| 225.0 | 0.4 | 0.4 | 0.4 | 0.4 | 0.4 | 0.4 | 0.4 | 0.4 |
| 247.5 | 0.4 | 0.4 | 0.4 | 0.4 | 0.4 | 0.4 | 0.4 | 0.4 |
| 270.0 | 0.4 | 0.4 | 0.4 | 0.4 | 0.4 | 0.4 | 0.4 | 0.4 |
| 292.5 | 0.4 | 0.4 | 0.4 | 0.4 | 0.4 | 0.4 | 0.4 | 0.4 |
| 315.0 | 0.4 | 0.4 | 0.4 | 0.4 | 0.4 | 0.4 | 0.4 | 0.4 |
| 337.5 | 0.4 | 0.4 | 0.4 | 0.4 | 0.4 | 0.4 | 0.4 | 0.4 |

DEPTH: 644 TILT: 0 RANGE: 19.9 VOS: 5634

| Bearing | + 0.0 | + 2.8 | + 5.6 | + 8.4 | +11.3 | +14.1 | +16.9 | +19.7 |
|---|---|---|---|---|---|---|---|---|
| 0.0 | 0.4 | 0.4 | 0.4 | 0.4 | 0.4 | 0.4 | 0.4 | 0.4 |
| 22.5 | 0.4 | 0.4 | 0.4 | 0.4 | 0.4 | 0.4 | 0.4 | 0.4 |
| 45.0 | 0.4 | 0.4 | 0.4 | 0.4 | 0.4 | 0.4 | 0.4 | 0.4 |
| 67.5 | 0.4 | 0.4 | 0.4 | 0.4 | 0.4 | 0.4 | 0.4 | 0.4 |
| 90.0 | 0.4 | 0.4 | 0.4 | 0.4 | 0.4 | 0.4 | 0.4 | 0.4 |
| 112.5 | 0.4 | 0.4 | 0.4 | 0.4 | 0.4 | 0.4 | 0.4 | 0.4 |
| 135.0 | 0.4 | 0.4 | 0.4 | 0.4 | 0.4 | 0.4 | 0.4 | 0.4 |
| 157.5 | 0.4 | 0.4 | 0.4 | 0.4 | 0.4 | 0.4 | 0.4 | 0.4 |
| 180.0 | 0.4 | 0.4 | 0.4 | 0.4 | 0.4 | 0.4 | 0.4 | 0.4 |
| 202.5 | 0.4 | 0.4 | 0.4 | 0.4 | 0.4 | 0.4 | 0.4 | 0.4 |
| 225.0 | 0.4 | 0.4 | 0.4 | 0.4 | 0.4 | 0.4 | 0.4 | 0.4 |
| 247.5 | 0.4 | 0.4 | 0.4 | 0.4 | 0.4 | 0.4 | 0.4 | 0.4 |
| 270.0 | 0.4 | 0.4 | 0.4 | 0.4 | 0.4 | 0.4 | 0.4 | 0.4 |
| 292.5 | 0.4 | 0.4 | 0.4 | 0.4 | 0.4 | 0.4 | 0.4 | 0.4 |
| 315.0 | 0.4 | 0.4 | 0.4 | 0.4 | 0.4 | 0.4 | 0.4 | 0.4 |
| 337.5 | 0.4 | 0.4 | 0.4 | 0.4 | 0.4 | 0.4 | 0.4 | 0.4 |

DEPTH: 645 TILT: 0 RANGE: 19.9 VOS: 5634

| Bearing | + 0.0 | + 2.8 | + 5.6 | + 8.4 | +11.3 | +14.1 | +16.9 | +19.7 |
|---|---|---|---|---|---|---|---|---|
| 0.0 | 0.4 | 0.4 | 0.4 | 0.4 | 0.4 | 0.4 | 0.4 | 0.4 |
| 22.5 | 0.4 | 0.4 | 0.4 | 0.4 | 0.4 | 0.4 | 0.4 | 0.4 |
| 45.0 | 0.4 | 0.4 | 0.4 | 0.4 | 0.4 | 0.4 | 0.4 | 0.4 |
| 67.5 | 0.4 | 0.4 | 0.4 | 0.4 | 0.4 | 0.4 | 0.4 | 0.4 |
| 90.0 | 0.4 | 0.4 | 0.4 | 0.4 | 0.4 | 0.4 | 0.4 | 0.4 |
| 112.5 | 0.4 | 0.4 | 0.4 | 0.4 | 0.4 | 0.4 | 0.4 | 0.4 |
| 135.0 | 0.4 | 0.4 | 0.4 | 0.4 | 0.4 | 0.4 | 0.4 | 0.4 |
| 157.5 | 0.4 | 0.4 | 0.4 | 0.4 | 0.4 | 0.4 | 0.4 | 0.4 |
| 180.0 | 0.4 | 0.4 | 0.4 | 0.4 | 0.4 | 0.4 | 0.4 | 0.4 |
| 202.5 | 0.4 | 0.4 | 0.4 | 0.4 | 0.4 | 0.4 | 0.4 | 0.4 |
| 225.0 | 0.4 | 0.4 | 0.4 | 0.4 | 0.4 | 0.4 | 0.4 | 0.4 |
| 247.5 | 0.4 | 0.4 | 0.4 | 0.4 | 0.4 | 0.4 | 0.4 | 0.4 |
| 270.0 | 0.4 | 0.4 | 0.4 | 0.4 | 0.4 | 0.4 | 0.4 | 0.4 |
| 292.5 | 0.4 | 0.4 | 0.4 | 0.4 | 0.4 | 0.4 | 0.4 | 0.4 |
| 315.0 | 0.4 | 0.4 | 0.4 | 0.4 | 0.4 | 0.4 | 0.4 | 0.4 |
| 337.5 | 0.4 | 0.4 | 0.4 | 0.4 | 0.4 | 0.4 | 0.4 | 0.4 |

DEPTH: 646 TILT: 0 RANGE: 19.9 VOS: 5634

| Bearing | + 0.0 | + 2.8 | + 5.6 | + 8.4 | +11.3 | +14.1 | +16.9 | +19.7 |
|---|---|---|---|---|---|---|---|---|
| 0.0 | 0.4 | 0.4 | 0.4 | 0.4 | 0.4 | 0.4 | 0.4 | 0.4 |
| 22.5 | 0.4 | 0.4 | 0.4 | 0.4 | 0.4 | 0.4 | 0.4 | 0.4 |
| 45.0 | 0.4 | 0.4 | 0.4 | 0.4 | 0.4 | 0.4 | 0.4 | 0.4 |
| 67.5 | 0.4 | 0.4 | 0.4 | 0.4 | 0.4 | 0.4 | 0.4 | 0.4 |
| 90.0 | 0.4 | 0.4 | 0.4 | 0.4 | 0.4 | 0.4 | 0.4 | 0.4 |
| 112.5 | 0.4 | 0.4 | 0.4 | 0.4 | 0.4 | 0.4 | 0.4 | 0.4 |
| 135.0 | 0.4 | 0.4 | 0.4 | 0.4 | 0.4 | 0.4 | 0.4 | 0.4 |
| 157.5 | 0.4 | 0.4 | 0.4 | 0.4 | 0.4 | 0.4 | 0.4 | 0.4 |
| 180.0 | 0.4 | 0.4 | 0.4 | 0.4 | 0.4 | 0.4 | 0.4 | 0.4 |
| 202.5 | 0.4 | 0.4 | 0.4 | 0.4 | 0.4 | 0.4 | 0.4 | 0.4 |
| 225.0 | 0.4 | 0.4 | 0.4 | 0.4 | 0.4 | 0.4 | 0.4 | 0.4 |
| 247.5 | 0.4 | 0.4 | 0.4 | 0.4 | 0.4 | 0.4 | 0.4 | 0.4 |
| 270.0 | 0.4 | 0.4 | 0.4 | 0.4 | 0.4 | 0.4 | 0.4 | 0.4 |
| 292.5 | 0.4 | 0.4 | 0.4 | 0.4 | 0.4 | 0.4 | 0.4 | 0.4 |
| 315.0 | 0.4 | 0.4 | 0.4 | 0.4 | 0.4 | 0.4 | 0.4 | 0.4 |
| 337.5 | 0.4 | 0.4 | 0.4 | 0.4 | 0.4 | 0.4 | 0.4 | 0.4 |

DEPTH: 647 TILT: 0 RANGE: 19.9 VOS: 5634

| Bearing | + 0.0 | + 2.8 | + 5.6 | + 8.4 | +11.3 | +14.1 | +16.9 | +19.7 |
|---|---|---|---|---|---|---|---|---|
| 0.0 | 0.4 | 0.4 | 0.4 | 0.4 | 0.4 | 0.4 | 0.4 | 0.4 |
| 22.5 | 0.4 | 0.4 | 0.4 | 0.4 | 0.4 | 0.4 | 0.4 | 0.4 |
| 45.0 | 0.4 | 0.4 | 0.4 | 0.4 | 0.4 | 0.4 | 0.4 | 0.4 |
| 67.5 | 0.4 | 0.4 | 0.4 | 0.4 | 0.4 | 0.4 | 0.4 | 0.4 |
| 90.0 | 0.4 | 0.4 | 0.4 | 0.4 | 0.4 | 0.4 | 0.4 | 0.4 |
| 112.5 | 0.4 | 0.4 | 0.4 | 0.4 | 0.4 | 0.4 | 0.4 | 0.4 |
| 135.0 | 0.4 | 0.4 | 0.4 | 0.4 | 0.4 | 0.4 | 0.4 | 0.4 |
| 157.5 | 0.4 | 0.4 | 0.4 | 0.4 | 0.4 | 0.4 | 0.4 | 0.4 |
| 180.0 | 0.4 | 0.4 | 0.4 | 0.4 | 0.4 | 0.4 | 0.4 | 0.4 |
| 202.5 | 0.4 | 0.4 | 0.4 | 0.4 | 0.4 | 0.4 | 0.4 | 0.4 |
| 225.0 | 0.4 | 0.4 | 0.4 | 0.4 | 0.4 | 0.4 | 0.4 | 0.4 |
| 247.5 | 0.4 | 0.4 | 0.4 | 0.4 | 0.4 | 0.4 | 0.4 | 0.4 |
| 270.0 | 0.4 | 0.4 | 0.4 | 0.4 | 0.4 | 0.4 | 0.4 | 0.4 |
| 292.5 | 0.4 | 0.4 | 0.4 | 0.4 | 0.4 | 0.4 | 0.4 | 0.4 |
| 315.0 | 0.4 | 0.4 | 0.4 | 0.4 | 0.4 | 0.4 | 0.4 | 0.4 |
| 337.5 | 0.4 | 0.4 | 0.4 | 0.4 | 0.4 | 0.4 | 0.4 | 0.4 |

DEPTH: 648 TILT: 0 RANGE: 19.9 VOS: 5634

| Bearing | + 0.0 | + 2.8 | + 5.6 | + 8.4 | +11.3 | +14.1 | +16.9 | +19.7 |
|---|---|---|---|---|---|---|---|---|
| 0.0 | 0.4 | 0.4 | 0.4 | 0.4 | 0.4 | 0.4 | 0.4 | 0.4 |
| 22.5 | 0.4 | 0.4 | 0.4 | 0.4 | 0.4 | 0.4 | 0.4 | 0.4 |
| 45.0 | 0.4 | 0.4 | 0.4 | 0.4 | 0.4 | 0.4 | 0.4 | 0.4 |
| 67.5 | 0.4 | 0.4 | 0.4 | 0.4 | 0.4 | 0.4 | 0.4 | 0.4 |
| 90.0 | 0.4 | 0.4 | 0.4 | 0.4 | 0.4 | 0.4 | 0.4 | 0.4 |
| 112.5 | 0.4 | 0.4 | 0.4 | 0.4 | 0.4 | 0.4 | 0.4 | 0.4 |
| 135.0 | 0.4 | 0.4 | 0.4 | 0.4 | 0.4 | 0.4 | 0.4 | 0.4 |
| 157.5 | 0.4 | 0.4 | 0.4 | 0.4 | 0.4 | 0.4 | 0.4 | 0.4 |
| 180.0 | 0.4 | 0.4 | 0.4 | 0.4 | 0.4 | 0.4 | 0.4 | 0.4 |
| 202.5 | 0.4 | 0.4 | 0.4 | 0.4 | 0.4 | 0.4 | 0.4 | 0.4 |
| 225.0 | 0.4 | 0.4 | 0.4 | 0.4 | 0.4 | 0.4 | 0.4 | 0.4 |
| 247.5 | 0.4 | 0.4 | 0.4 | 0.4 | 0.4 | 0.4 | 0.4 | 0.4 |
| 270.0 | 0.4 | 0.4 | 0.4 | 0.4 | 0.4 | 0.4 | 0.4 | 0.4 |
| 292.5 | 0.4 | 0.4 | 0.4 | 0.4 | 0.4 | 0.4 | 0.4 | 0.4 |
| 315.0 | 0.4 | 0.4 | 0.4 | 0.4 | 0.4 | 0.4 | 0.4 | 0.4 |
| 337.5 | 0.4 | 0.4 | 0.4 | 0.4 | 0.4 | 0.4 | 0.4 | 0.4 |

DEPTH: 649 TILT: 0 RANGE: 19.9 VOS: 5634

| Bearing | + 0.0 | + 2.8 | + 5.6 | + 8.4 | +11.3 | +14.1 | +16.9 | +19.7 |
|---|---|---|---|---|---|---|---|---|
| 0.0 | 0.4 | 0.4 | 0.4 | 0.4 | 0.4 | 0.4 | 0.4 | 0.4 |
| 22.5 | 0.4 | 0.4 | 0.4 | 0.4 | 0.4 | 0.4 | 0.4 | 0.4 |
| 45.0 | 0.4 | 0.4 | 0.4 | 0.4 | 0.4 | 0.4 | 0.4 | 0.4 |
| 67.5 | 0.4 | 0.4 | 0.4 | 0.4 | 0.4 | 0.4 | 0.4 | 0.4 |
| 90.0 | 0.4 | 0.4 | 0.4 | 0.4 | 0.4 | 0.4 | 0.4 | 0.4 |
| 112.5 | 0.4 | 0.4 | 0.4 | 0.4 | 0.4 | 0.4 | 0.4 | 0.4 |
| 135.0 | 0.4 | 0.4 | 0.4 | 0.4 | 0.4 | 0.4 | 0.4 | 0.4 |
| 157.5 | 0.4 | 0.4 | 0.4 | 0.4 | 0.4 | 0.4 | 0.4 | 0.4 |
| 180.0 | 0.4 | 0.4 | 0.4 | 0.4 | 0.4 | 0.4 | 0.4 | 0.4 |
| 202.5 | 0.4 | 0.4 | 0.4 | 0.4 | 0.4 | 0.4 | 0.4 | 0.4 |
| 225.0 | 0.4 | 0.4 | 0.4 | 0.4 | 0.4 | 0.4 | 0.4 | 0.4 |
| 247.5 | 0.4 | 0.4 | 0.4 | 0.4 | 0.4 | 0.4 | 0.4 | 0.4 |
| 270.0 | 0.4 | 0.4 | 0.4 | 0.4 | 0.4 | 0.4 | 0.4 | 0.4 |
| 292.5 | 0.4 | 0.4 | 0.4 | 0.4 | 0.4 | 0.4 | 0.4 | 0.4 |
| 315.0 | 0.4 | 0.4 | 0.4 | 0.4 | 0.4 | 0.4 | 0.4 | 0.4 |
| 337.5 | 0.4 | 0.4 | 0.4 | 0.4 | 0.4 | 0.4 | 0.4 | 0.4 |

DEPTH: 650 TILT: 0 RANGE: 19.9 VOS: 5634

| Bearing | + 0.0 | + 2.8 | + 5.6 | + 8.4 | +11.3 | +14.1 | +16.9 | +19.7 |
|---|---|---|---|---|---|---|---|---|
| 0.0 | 0.4 | 0.4 | 0.4 | 0.4 | 0.4 | 0.4 | 0.4 | 0.4 |
| 22.5 | 0.4 | 0.4 | 0.4 | 0.4 | 0.4 | 0.4 | 0.4 | 0.4 |
| 45.0 | 0.4 | 0.4 | 0.4 | 0.4 | 0.4 | 0.4 | 0.4 | 0.4 |
| 67.5 | 0.4 | 0.4 | 0.4 | 0.4 | 0.4 | 0.4 | 0.4 | 0.4 |
| 90.0 | 0.4 | 0.4 | 0.4 | 0.4 | 0.4 | 0.4 | 0.4 | 0.4 |
| 112.5 | 0.4 | 0.4 | 0.4 | 0.4 | 0.4 | 0.4 | 0.4 | 0.4 |
| 135.0 | 0.4 | 0.4 | 0.4 | 0.4 | 0.4 | 0.4 | 0.4 | 0.4 |
| 157.5 | 0.4 | 0.4 | 0.4 | 0.4 | 0.4 | 0.4 | 0.4 | 0.4 |
| 180.0 | 0.4 | 0.4 | 0.4 | 0.4 | 0.4 | 0.4 | 0.4 | 0.4 |
| 202.5 | 0.4 | 0.4 | 0.4 | 0.4 | 0.4 | 0.4 | 0.4 | 0.4 |
| 225.0 | 0.4 | 0.4 | 0.4 | 0.4 | 0.4 | 0.4 | 0.4 | 0.4 |
| 247.5 | 0.4 | 0.4 | 0.4 | 0.4 | 0.4 | 0.4 | 0.4 | 0.4 |
| 270.0 | 0.4 | 0.4 | 0.4 | 0.4 | 0.4 | 0.4 | 0.4 | 0.4 |
| 292.5 | 0.4 | 0.4 | 0.4 | 0.4 | 0.4 | 0.4 | 0.4 | 0.4 |
| 315.0 | 0.4 | 0.4 | 0.4 | 0.4 | 0.4 | 0.4 | 0.4 | 0.4 |
| 337.5 | 0.4 | 0.4 | 0.4 | 0.4 | 0.4 | 0.4 | 0.4 | 0.4 |

DEPTH: 651 TILT: 0 RANGE: 19.9 VOS: 5634

| Bearing | + 0.0 | + 2.8 | + 5.6 | + 8.4 | +11.3 | +14.1 | +16.9 | +19.7 |
|---|---|---|---|---|---|---|---|---|
| 0.0 | 0.4 | 0.4 | 0.4 | 0.4 | 0.4 | 0.4 | 0.4 | 0.4 |
| 22.5 | 0.4 | 0.4 | 0.4 | 0.4 | 0.4 | 0.4 | 0.4 | 0.4 |
| 45.0 | 0.4 | 0.4 | 0.4 | 0.4 | 0.4 | 0.4 | 0.4 | 0.4 |
| 67.5 | 0.4 | 0.4 | 0.4 | 0.4 | 0.4 | 0.4 | 0.4 | 0.4 |
| 90.0 | 0.4 | 0.4 | 0.4 | 0.4 | 0.4 | 0.4 | 0.4 | 0.4 |
| 112.5 | 0.4 | 0.4 | 0.4 | 0.4 | 0.4 | 0.4 | 0.4 | 0.4 |
| 135.0 | 0.4 | 0.4 | 0.4 | 0.4 | 0.4 | 0.4 | 0.4 | 0.4 |
| 157.5 | 0.4 | 0.4 | 0.4 | 0.4 | 0.4 | 0.4 | 0.4 | 0.4 |
| 180.0 | 0.4 | 0.4 | 0.4 | 0.4 | 0.4 | 0.4 | 0.4 | 0.4 |
| 202.5 | 0.4 | 0.4 | 0.4 | 0.4 | 0.4 | 0.4 | 0.4 | 0.4 |
| 225.0 | 0.4 | 0.4 | 0.4 | 0.4 | 0.4 | 0.4 | 0.4 | 0.4 |
| 247.5 | 0.4 | 0.4 | 0.4 | 0.4 | 0.4 | 0.4 | 0.4 | 0.4 |
| 270.0 | 0.4 | 0.4 | 0.4 | 0.4 | 0.4 | 0.4 | 0.4 | 0.4 |
| 292.5 | 0.4 | 0.4 | 0.4 | 0.4 | 0.4 | 0.4 | 0.4 | 0.4 |
| 315.0 | 0.4 | 0.4 | 0.4 | 0.4 | 0.4 | 0.4 | 0.4 | 0.4 |
| 337.5 | 0.4 | 0.4 | 0.4 | 0.4 | 0.4 | 0.4 | 0.4 | 0.4 |

DEPTH: 652 TILT: 0 RANGE: 19.9 VOS: 5634

| Bearing | + 0.0 | + 2.8 | + 5.6 | + 8.4 | +11.3 | +14.1 | +16.9 | +19.7 |
|---|---|---|---|---|---|---|---|---|
| 0.0 | 0.4 | 0.4 | 0.4 | 0.4 | 0.4 | 0.4 | 0.4 | 0.4 |
| 22.5 | 0.4 | 0.4 | 0.4 | 0.4 | 0.4 | 0.4 | 0.4 | 0.4 |
| 45.0 | 0.4 | 0.4 | 0.4 | 0.4 | 0.4 | 0.4 | 0.4 | 0.4 |
| 67.5 | 0.4 | 0.4 | 0.4 | 0.4 | 0.4 | 0.4 | 0.4 | 0.4 |
| 90.0 | 0.4 | 0.4 | 0.4 | 0.4 | 0.4 | 0.4 | 0.4 | 0.4 |
| 112.5 | 0.4 | 0.4 | 0.4 | 0.4 | 0.4 | 0.4 | 0.4 | 0.4 |
| 135.0 | 0.4 | 0.4 | 0.4 | 0.4 | 0.4 | 0.4 | 0.4 | 0.4 |
| 157.5 | 0.4 | 0.4 | 0.4 | 0.4 | 0.4 | 0.4 | 0.4 | 0.4 |
| 180.0 | 0.4 | 0.4 | 0.4 | 0.4 | 0.4 | 0.4 | 0.4 | 0.4 |
| 202.5 | 0.4 | 0.4 | 0.4 | 0.4 | 0.4 | 0.4 | 0.4 | 0.4 |
| 225.0 | 0.4 | 0.4 | 0.4 | 0.4 | 0.4 | 0.4 | 0.4 | 0.4 |
| 247.5 | 0.4 | 0.4 | 0.4 | 0.4 | 0.4 | 0.4 | 0.4 | 0.4 |
| 270.0 | 0.4 | 0.4 | 0.4 | 0.4 | 0.4 | 0.4 | 0.4 | 0.4 |
| 292.5 | 0.4 | 0.4 | 0.4 | 0.4 | 0.4 | 0.4 | 0.4 | 0.4 |
| 315.0 | 0.4 | 0.4 | 0.4 | 0.4 | 0.4 | 0.4 | 0.4 | 0.4 |
| 337.5 | 0.4 | 0.4 | 0.4 | 0.4 | 0.4 | 0.4 | 0.4 | 0.4 |

DEPTH: 653 TILT: 0 RANGE: 19.9 VOS: 5634

| Bearing | + 0.0 | + 2.8 | + 5.6 | + 8.4 | +11.3 | +14.1 | +16.9 | +19.7 |
|---|---|---|---|---|---|---|---|---|
| 0.0 | 0.4 | 0.4 | 0.4 | 0.4 | 0.4 | 0.4 | 0.4 | 0.4 |
| 22.5 | 0.4 | 0.4 | 0.4 | 0.4 | 0.4 | 0.4 | 0.4 | 0.4 |
| 45.0 | 0.4 | 0.4 | 0.4 | 0.4 | 0.4 | 0.4 | 0.4 | 0.4 |
| 67.5 | 0.4 | 0.4 | 0.4 | 0.4 | 0.4 | 0.4 | 0.4 | 0.4 |
| 90.0 | 0.4 | 0.4 | 0.4 | 0.4 | 0.4 | 0.4 | 0.4 | 0.4 |
| 112.5 | 0.4 | 0.4 | 0.4 | 0.4 | 0.4 | 0.4 | 0.4 | 0.4 |
| 135.0 | 0.4 | 0.4 | 0.4 | 0.4 | 0.4 | 0.4 | 0.4 | 0.4 |
| 157.5 | 0.4 | 0.4 | 0.4 | 0.4 | 0.4 | 0.4 | 0.4 | 0.4 |
| 180.0 | 0.4 | 0.4 | 0.4 | 0.4 | 0.4 | 0.4 | 0.4 | 0.4 |
| 202.5 | 0.4 | 0.4 | 0.4 | 0.4 | 0.4 | 0.4 | 0.4 | 0.4 |
| 225.0 | 0.4 | 0.4 | 0.4 | 0.4 | 0.4 | 0.4 | 0.4 | 0.4 |
| 247.5 | 0.4 | 0.4 | 0.4 | 0.4 | 0.4 | 0.4 | 0.4 | 0.4 |
| 270.0 | 0.4 | 0.4 | 0.4 | 0.4 | 0.4 | 0.4 | 0.4 | 0.4 |
| 292.5 | 0.4 | 0.4 | 0.4 | 0.4 | 0.4 | 0.4 | 0.4 | 0.4 |
| 315.0 | 0.4 | 0.4 | 0.4 | 0.4 | 0.4 | 0.4 | 0.4 | 0.4 |
| 337.5 | 0.4 | 0.4 | 0.4 | 0.4 | 0.4 | 0.4 | 0.4 | 0.4 |

DEPTH: 654 TILT: 0 RANGE: 19.9 VOS: 5634

| Bearing | + 0.0 | + 2.8 | + 5.6 | + 8.4 | +11.3 | +14.1 | +16.9 | +19.7 |
|---|---|---|---|---|---|---|---|---|
| 0.0 | 0.4 | 0.4 | 0.4 | 0.4 | 0.4 | 0.4 | 0.4 | 0.4 |
| 22.5 | 0.4 | 0.4 | 0.4 | 0.4 | 0.4 | 0.4 | 0.4 | 0.4 |
| 45.0 | 0.4 | 0.4 | 0.4 | 0.4 | 0.4 | 0.4 | 0.4 | 0.4 |
| 67.5 | 0.4 | 0.4 | 0.4 | 0.4 | 0.4 | 0.4 | 0.4 | 0.4 |
| 90.0 | 0.4 | 0.4 | 0.4 | 0.4 | 0.4 | 0.4 | 0.4 | 0.4 |
| 112.5 | 0.4 | 0.4 | 0.4 | 0.4 | 0.4 | 0.4 | 0.4 | 0.4 |
| 135.0 | 0.4 | 0.4 | 0.4 | 0.4 | 0.4 | 0.4 | 0.4 | 0.4 |
| 157.5 | 0.4 | 0.4 | 0.4 | 0.4 | 0.4 | 0.4 | 0.4 | 0.4 |
| 180.0 | 0.4 | 0.4 | 0.4 | 0.4 | 0.4 | 0.4 | 0.4 | 0.4 |
| 202.5 | 0.4 | 0.4 | 0.4 | 0.4 | 0.4 | 0.4 | 0.4 | 0.4 |
| 225.0 | 0.4 | 0.4 | 0.4 | 0.4 | 0.4 | 0.4 | 0.4 | 0.4 |
| 247.5 | 0.4 | 0.4 | 0.4 | 0.4 | 0.4 | 0.4 | 0.4 | 0.4 |
| 270.0 | 0.4 | 0.4 | 0.4 | 0.4 | 0.4 | 0.4 | 0.4 | 0.4 |
| 292.5 | 0.4 | 0.4 | 0.4 | 0.4 | 0.4 | 0.4 | 0.4 | 0.4 |
| 315.0 | 0.4 | 0.4 | 0.4 | 0.4 | 0.4 | 0.4 | 0.4 | 0.4 |
| 337.5 | 0.4 | 0.4 | 0.4 | 0.4 | 0.4 | 0.4 | 0.4 | 0.4 |

DEPTH: 655 TILT: 0 RANGE: 19.9 VOS: 5634

| Bearing | + 0.0 | + 2.8 | + 5.6 | + 8.4 | +11.3 | +14.1 | +16.9 | +19.7 |
|---|---|---|---|---|---|---|---|---|
| 0.0 | 0.4 | 0.4 | 0.4 | 0.4 | 0.4 | 0.4 | 0.4 | 0.4 |
| 22.5 | 0.4 | 0.4 | 0.4 | 0.4 | 0.4 | 0.4 | 0.4 | 0.4 |
| 45.0 | 0.4 | 0.4 | 0.4 | 0.4 | 0.4 | 0.4 | 0.4 | 0.4 |
| 67.5 | 0.4 | 0.4 | 0.4 | 0.4 | 0.4 | 0.4 | 0.4 | 0.4 |
| 90.0 | 0.4 | 0.4 | 0.4 | 0.4 | 0.4 | 0.4 | 0.4 | 0.4 |
| 112.5 | 0.4 | 0.4 | 0.4 | 0.4 | 0.4 | 0.4 | 0.4 | 0.4 |
| 135.0 | 0.4 | 0.4 | 0.4 | 0.4 | 0.4 | 0.4 | 0.4 | 0.4 |
| 157.5 | 0.4 | 0.4 | 0.4 | 0.4 | 0.4 | 0.4 | 0.4 | 0.4 |
| 180.0 | 0.4 | 0.4 | 0.4 | 0.4 | 0.4 | 0.4 | 0.4 | 0.4 |
| 202.5 | 0.4 | 0.4 | 0.4 | 0.4 | 0.4 | 0.4 | 0.4 | 0.4 |
| 225.0 | 0.4 | 0.4 | 0.4 | 0.4 | 0.4 | 0.4 | 0.4 | 0.4 |
| 247.5 | 0.4 | 0.4 | 0.4 | 0.4 | 0.4 | 0.4 | 0.4 | 0.4 |
| 270.0 | 0.4 | 0.4 | 0.4 | 0.4 | 0.4 | 0.4 | 0.4 | 0.4 |
| 292.5 | 0.4 | 0.4 | 0.4 | 0.4 | 0.4 | 0.4 | 0.4 | 0.4 |
| 315.0 | 0.4 | 0.4 | 0.4 | 0.4 | 0.4 | 0.4 | 0.4 | 0.4 |
| 337.5 | 0.4 | 0.4 | 0.4 | 0.4 | 0.4 | 0.4 | 0.4 | 0.4 |

DEPTH: 656 TILT: 0 RANGE: 19.9 VOS: 5634

| Bearing | + 0.0 | + 2.8 | + 5.6 | + 8.4 | +11.3 | +14.1 | +16.9 | +19.7 |
|---|---|---|---|---|---|---|---|---|
| 0.0 | 0.4 | 0.4 | 0.4 | 0.4 | 0.4 | 0.4 | 0.4 | 0.4 |
| 22.5 | 0.4 | 0.4 | 0.4 | 0.4 | 0.4 | 0.4 | 0.4 | 0.4 |
| 45.0 | 0.4 | 0.4 | 0.4 | 0.4 | 0.4 | 0.4 | 0.4 | 0.4 |
| 67.5 | 0.4 | 0.4 | 0.4 | 0.4 | 0.4 | 0.4 | 0.4 | 0.4 |
| 90.0 | 0.4 | 0.4 | 0.4 | 0.4 | 0.4 | 0.4 | 0.4 | 0.4 |
| 112.5 | 0.4 | 0.4 | 0.4 | 0.4 | 0.4 | 0.4 | 0.4 | 0.4 |
| 135.0 | 0.4 | 0.4 | 0.4 | 0.4 | 0.4 | 0.4 | 0.4 | 0.4 |
| 157.5 | 0.4 | 0.4 | 0.4 | 0.4 | 0.4 | 0.4 | 0.4 | 0.4 |
| 180.0 | 0.4 | 0.4 | 0.4 | 0.4 | 0.4 | 0.4 | 0.4 | 0.4 |
| 202.5 | 0.4 | 0.4 | 0.4 | 0.4 | 0.4 | 0.4 | 0.4 | 0.4 |
| 225.0 | 0.4 | 0.4 | 0.4 | 0.4 | 0.4 | 0.4 | 0.4 | 0.4 |
| 247.5 | 0.4 | 0.4 | 0.4 | 0.4 | 0.4 | 0.4 | 0.4 | 0.4 |
| 270.0 | 0.4 | 0.4 | 0.4 | 0.4 | 0.4 | 0.4 | 0.4 | 0.4 |
| 292.5 | 0.4 | 0.4 | 0.4 | 0.4 | 0.4 | 0.4 | 0.4 | 0.4 |
| 315.0 | 0.4 | 0.4 | 0.4 | 0.4 | 0.4 | 0.4 | 0.4 | 0.4 |
| 337.5 | 0.4 | 0.4 | 0.4 | 0.4 | 0.4 | 0.4 | 0.4 | 0.4 |

DEPTH: 657 TILT: 0 RANGE: 19.9 VOS: 5634

| Bearing | + 0.0 | + 2.8 | + 5.6 | + 8.4 | +11.3 | +14.1 | +16.9 | +19.7 |
|---|---|---|---|---|---|---|---|---|
| 0.0 | 0.4 | 0.4 | 0.4 | 0.4 | 0.4 | 0.4 | 0.4 | 0.4 |
| 22.5 | 0.4 | 0.4 | 0.4 | 0.4 | 0.4 | 0.4 | 0.4 | 0.4 |
| 45.0 | 0.4 | 0.4 | 0.4 | 0.4 | 0.4 | 0.4 | 0.4 | 0.4 |
| 67.5 | 0.4 | 0.4 | 0.4 | 0.4 | 0.4 | 0.4 | 0.4 | 0.4 |
| 90.0 | 0.4 | 0.4 | 0.4 | 0.4 | 0.4 | 0.4 | 0.4 | 0.4 |
| 112.5 | 0.4 | 0.4 | 0.4 | 0.4 | 0.4 | 0.4 | 0.4 | 0.4 |
| 135.0 | 0.4 | 0.4 | 0.4 | 0.4 | 0.4 | 0.4 | 0.4 | 0.4 |
| 157.5 | 0.4 | 0.4 | 0.4 | 0.4 | 0.4 | 0.4 | 0.4 | 0.4 |
| 180.0 | 0.4 | 0.4 | 0.4 | 0.4 | 0.4 | 0.4 | 0.4 | 0.4 |
| 202.5 | 0.4 | 0.4 | 0.4 | 0.4 | 0.4 | 0.4 | 0.4 | 0.4 |
| 225.0 | 0.4 | 0.4 | 0.4 | 0.4 | 0.4 | 0.4 | 0.4 | 0.4 |
| 247.5 | 0.4 | 0.4 | 0.4 | 0.4 | 0.4 | 0.4 | 0.4 | 0.4 |
| 270.0 | 0.4 | 0.4 | 0.4 | 0.4 | 0.4 | 0.4 | 0.4 | 0.4 |
| 292.5 | 0.4 | 0.4 | 0.4 | 0.4 | 0.4 | 0.4 | 0.4 | 0.4 |
| 315.0 | 0.4 | 0.4 | 0.4 | 0.4 | 0.4 | 0.4 | 0.4 | 0.4 |
| 337.5 | 0.4 | 0.4 | 0.4 | 0.4 | 0.4 | 0.4 | 0.4 | 0.4 |

DEPTH: 658 TILT: 0 RANGE: 19.9 VOS: 5634

| Bearing | + 0.0 | + 2.8 | + 5.6 | + 8.4 | +11.3 | +14.1 | +16.9 | +19.7 |
|---|---|---|---|---|---|---|---|---|
| 0.0 | 0.4 | 0.4 | 0.4 | 0.4 | 0.4 | 0.4 | 0.4 | 0.4 |
| 22.5 | 0.4 | 0.4 | 0.4 | 0.4 | 0.4 | 0.4 | 0.4 | 0.4 |
| 45.0 | 0.4 | 0.4 | 0.4 | 0.4 | 0.4 | 0.4 | 0.4 | 0.4 |
| 67.5 | 0.4 | 0.4 | 0.4 | 0.4 | 0.4 | 0.4 | 0.4 | 0.4 |
| 90.0 | 0.4 | 0.4 | 0.4 | 0.4 | 0.4 | 0.4 | 0.4 | 0.4 |
| 112.5 | 0.4 | 0.4 | 0.4 | 0.4 | 0.4 | 0.4 | 0.4 | 0.4 |
| 135.0 | 0.4 | 0.4 | 0.4 | 0.4 | 0.4 | 0.4 | 0.4 | 0.4 |
| 157.5 | 0.4 | 0.4 | 0.4 | 0.4 | 0.4 | 0.4 | 0.4 | 0.4 |
| 180.0 | 0.4 | 0.4 | 0.4 | 0.4 | 0.4 | 0.4 | 0.4 | 0.4 |
| 202.5 | 0.4 | 0.4 | 0.4 | 0.4 | 0.4 | 0.4 | 0.4 | 0.4 |
| 225.0 | 0.4 | 0.4 | 0.4 | 0.4 | 0.4 | 0.4 | 0.4 | 0.4 |
| 247.5 | 0.4 | 0.4 | 0.4 | 0.4 | 0.4 | 0.4 | 0.4 | 0.4 |
| 270.0 | 0.4 | 0.4 | 0.4 | 0.4 | 0.4 | 0.4 | 0.4 | 0.4 |
| 292.5 | 0.4 | 0.4 | 0.4 | 0.4 | 0.4 | 0.4 | 0.4 | 0.4 |
| 315.0 | 0.4 | 0.4 | 0.4 | 0.4 | 0.4 | 0.4 | 0.4 | 0.4 |
| 337.5 | 0.4 | 0.4 | 0.4 | 0.4 | 0.4 | 0.4 | 0.4 | 0.4 |

DEPTH: 659 TILT: 0 RANGE: 19.9 VOS: 5634

| Bearing | + 0.0 | + 2.8 | + 5.6 | + 8.4 | +11.3 | +14.1 | +16.9 | +19.7 |
|---|---|---|---|---|---|---|---|---|
| 0.0 | 0.4 | 0.4 | 0.4 | 0.4 | 0.4 | 0.4 | 0.4 | 0.4 |
| 22.5 | 0.4 | 0.4 | 0.4 | 0.4 | 0.4 | 0.4 | 0.4 | 0.4 |
| 45.0 | 0.4 | 0.4 | 0.4 | 0.4 | 0.4 | 0.4 | 0.4 | 0.4 |
| 67.5 | 0.4 | 0.4 | 0.4 | 0.4 | 0.4 | 0.4 | 0.4 | 0.4 |
| 90.0 | 0.4 | 0.4 | 0.4 | 0.4 | 0.4 | 0.4 | 0.4 | 0.4 |
| 112.5 | 0.4 | 0.4 | 0.4 | 0.4 | 0.4 | 0.4 | 0.4 | 0.4 |
| 135.0 | 0.4 | 0.4 | 0.4 | 0.4 | 0.4 | 0.4 | 0.4 | 0.4 |
| 157.5 | 0.4 | 0.4 | 0.4 | 0.4 | 0.4 | 0.4 | 0.4 | 0.4 |
| 180.0 | 0.4 | 0.4 | 0.4 | 0.4 | 0.4 | 0.4 | 0.4 | 0.4 |
| 202.5 | 0.4 | 0.4 | 0.4 | 0.4 | 0.4 | 0.4 | 0.4 | 0.4 |
| 225.0 | 0.4 | 0.4 | 0.4 | 0.4 | 0.4 | 0.4 | 0.4 | 0.4 |
| 247.5 | 0.4 | 0.4 | 0.4 | 0.4 | 0.4 | 0.4 | 0.4 | 0.4 |
| 270.0 | 0.4 | 0.4 | 0.4 | 0.4 | 0.4 | 0.4 | 0.4 | 0.4 |
| 292.5 | 0.4 | 0.4 | 0.4 | 0.4 | 0.4 | 0.4 | 0.4 | 0.4 |
| 315.0 | 0.4 | 0.4 | 0.4 | 0.4 | 0.4 | 0.4 | 0.4 | 0.4 |
| 337.5 | 0.4 | 0.4 | 0.4 | 0.4 | 0.4 | 0.4 | 0.4 | 0.4 |

DEPTH: 660 TILT: 0 RANGE: 19.9 VOS: 5634

| Bearing | + 0.0 | + 2.8 | + 5.6 | + 8.4 | +11.3 | +14.1 | +16.9 | +19.7 |
|---|---|---|---|---|---|---|---|---|
| 0.0 | 0.4 | 0.4 | 0.4 | 0.4 | 0.4 | 0.4 | 0.4 | 0.4 |
| 22.5 | 0.4 | 0.4 | 0.4 | 0.4 | 0.4 | 0.4 | 0.4 | 0.4 |
| 45.0 | 0.4 | 0.4 | 0.4 | 0.4 | 0.4 | 0.4 | 0.4 | 0.4 |
| 67.5 | 0.4 | 0.4 | 0.4 | 0.4 | 0.4 | 0.4 | 0.4 | 0.4 |
| 90.0 | 0.4 | 0.4 | 0.4 | 0.4 | 0.4 | 0.4 | 0.4 | 0.4 |
| 112.5 | 0.4 | 0.4 | 0.4 | 0.4 | 0.4 | 0.4 | 0.4 | 0.4 |
| 135.0 | 0.4 | 0.4 | 0.4 | 0.4 | 0.4 | 0.4 | 0.4 | 0.4 |
| 157.5 | 0.4 | 0.4 | 0.4 | 0.4 | 0.4 | 0.4 | 0.4 | 0.4 |
| 180.0 | 0.4 | 0.4 | 0.4 | 0.4 | 0.4 | 0.4 | 0.4 | 0.4 |
| 202.5 | 0.4 | 0.4 | 0.4 | 0.4 | 0.4 | 0.4 | 0.4 | 0.4 |
| 225.0 | 0.4 | 0.4 | 0.4 | 0.4 | 0.4 | 0.4 | 0.4 | 0.4 |
| 247.5 | 0.4 | 0.4 | 0.4 | 0.4 | 0.4 | 0.4 | 0.4 | 0.4 |
| 270.0 | 0.4 | 0.4 | 0.4 | 0.4 | 0.4 | 0.4 | 0.4 | 0.4 |
| 292.5 | 0.4 | 0.4 | 0.4 | 0.4 | 0.4 | 0.4 | 0.4 | 0.4 |
| 315.0 | 0.4 | 0.4 | 0.4 | 0.4 | 0.4 | 0.4 | 0.4 | 0.4 |
| 337.5 | 0.4 | 0.4 | 0.4 | 0.4 | 0.4 | 0.4 | 0.4 | 0.4 |

DEPTH: 661 TILT: 0 RANGE: 19.9 VOS: 5634

| Bearing | + 0.0 | + 2.8 | + 5.6 | + 8.4 | +11.3 | +14.1 | +16.9 | +19.7 |
|---|---|---|---|---|---|---|---|---|
| 0.0 | 0.4 | 0.4 | 0.4 | 0.4 | 0.4 | 0.4 | 0.4 | 0.4 |
| 22.5 | 0.4 | 0.4 | 0.4 | 0.4 | 0.4 | 0.4 | 0.4 | 0.4 |
| 45.0 | 0.4 | 0.4 | 0.4 | 0.4 | 0.4 | 0.4 | 0.4 | 0.4 |
| 67.5 | 0.4 | 0.4 | 0.4 | 0.4 | 0.4 | 0.4 | 0.4 | 0.4 |
| 90.0 | 0.4 | 0.4 | 0.4 | 0.4 | 0.4 | 0.4 | 0.4 | 0.4 |
| 112.5 | 0.4 | 0.4 | 0.4 | 0.4 | 0.4 | 0.4 | 0.4 | 0.4 |
| 135.0 | 0.4 | 0.4 | 0.4 | 0.4 | 0.4 | 0.4 | 0.4 | 0.4 |
| 157.5 | 0.4 | 0.4 | 0.4 | 0.4 | 0.4 | 0.4 | 0.4 | 0.4 |
| 180.0 | 0.4 | 0.4 | 0.4 | 0.4 | 0.4 | 0.4 | 0.4 | 0.4 |
| 202.5 | 0.4 | 0.4 | 0.4 | 0.4 | 0.4 | 0.4 | 0.4 | 0.4 |
| 225.0 | 0.4 | 0.4 | 0.4 | 0.4 | 0.4 | 0.4 | 0.4 | 0.4 |
| 247.5 | 0.4 | 0.4 | 0.4 | 0.4 | 0.4 | 0.4 | 0.4 | 0.4 |
| 270.0 | 0.4 | 0.4 | 0.4 | 0.4 | 0.4 | 0.4 | 0.4 | 0.4 |
| 292.5 | 0.4 | 0.4 | 0.4 | 0.4 | 0.4 | 0.4 | 0.4 | 0.4 |
| 315.0 | 0.4 | 0.4 | 0.4 | 0.4 | 0.4 | 0.4 | 0.4 | 0.4 |
| 337.5 | 0.4 | 0.4 | 0.4 | 0.4 | 0.4 | 0.4 | 0.4 | 0.4 |

DEPTH: 662 TILT: 0 RANGE: 19.9 VOS: 5634

| Bearing | + 0.0 | + 2.8 | + 5.6 | + 8.4 | +11.3 | +14.1 | +16.9 | +19.7 |
|---|---|---|---|---|---|---|---|---|
| 0.0 | 0.4 | 0.4 | 0.4 | 0.4 | 0.4 | 0.4 | 0.4 | 0.4 |
| 22.5 | 0.4 | 0.4 | 0.4 | 0.4 | 0.4 | 0.4 | 0.4 | 0.4 |
| 45.0 | 0.4 | 0.4 | 0.4 | 0.4 | 0.4 | 0.4 | 0.4 | 0.4 |
| 67.5 | 0.4 | 0.4 | 0.4 | 0.4 | 0.4 | 0.4 | 0.4 | 0.4 |
| 90.0 | 0.4 | 0.4 | 0.4 | 0.4 | 0.4 | 0.4 | 0.4 | 0.4 |
| 112.5 | 0.4 | 0.4 | 0.4 | 0.4 | 0.4 | 0.4 | 0.4 | 0.4 |
| 135.0 | 0.4 | 0.4 | 0.4 | 0.4 | 0.4 | 0.4 | 0.4 | 0.4 |
| 157.5 | 0.4 | 0.4 | 0.4 | 0.4 | 0.4 | 0.4 | 0.4 | 0.4 |
| 180.0 | 0.4 | 0.4 | 0.4 | 0.4 | 0.4 | 0.4 | 0.4 | 0.4 |
| 202.5 | 0.4 | 0.4 | 0.4 | 0.4 | 0.4 | 0.4 | 0.4 | 0.4 |
| 225.0 | 0.4 | 0.4 | 0.4 | 0.4 | 0.4 | 0.4 | 0.4 | 0.4 |
| 247.5 | 0.4 | 0.4 | 0.4 | 0.4 | 0.4 | 0.4 | 0.4 | 0.4 |
| 270.0 | 0.4 | 0.4 | 0.4 | 0.4 | 0.4 | 0.4 | 0.4 | 0.4 |
| 292.5 | 0.4 | 0.4 | 0.4 | 0.4 | 0.4 | 0.4 | 0.4 | 0.4 |
| 315.0 | 0.4 | 0.4 | 0.4 | 0.4 | 0.4 | 0.4 | 0.4 | 0.4 |
| 337.5 | 0.4 | 0.4 | 0.4 | 0.4 | 0.4 | 0.4 | 0.4 | 0.4 |

DEPTH: 663 TILT: 0 RANGE: 19.9 VOS: 5634

| Bearing | + 0.0 | + 2.8 | + 5.6 | + 8.4 | +11.3 | +14.1 | +16.9 | +19.7 |
|---|---|---|---|---|---|---|---|---|
| 0.0 | 0.5 | 0.5 | 0.5 | 0.5 | 0.5 | 0.5 | 0.5 | 0.5 |
| 22.5 | 0.5 | 0.5 | 0.5 | 0.5 | 0.5 | 0.5 | 0.5 | 0.5 |
| 45.0 | 0.5 | 0.5 | 0.5 | 0.5 | 0.5 | 0.5 | 0.5 | 0.5 |
| 67.5 | 0.5 | 0.5 | 0.5 | 0.5 | 0.5 | 0.5 | 0.5 | 0.5 |
| 90.0 | 0.5 | 0.5 | 0.5 | 0.5 | 0.5 | 0.5 | 0.5 | 0.5 |
| 112.5 | 0.5 | 0.5 | 0.5 | 0.5 | 0.5 | 0.5 | 0.5 | 0.5 |
| 135.0 | 0.6 | 0.6 | 0.6 | 0.6 | 0.5 | 0.5 | 0.5 | 0.6 |
| 157.5 | 0.8 | 0.9 | 1.0 | 1.1 | 0.7 | 0.7 | 0.8 | 0.8 |
| 180.0 | 1.2 | 1.2 | 1.2 | 1.2 | 1.2 | 1.2 | 1.2 | 1.2 |
| 202.5 | 1.1 | 1.1 | 1.1 | 1.0 | 1.2 | 1.2 | 1.2 | 1.1 |
| 225.0 | 0.8 | 0.8 | 0.8 | 0.7 | 1.0 | 0.9 | 0.9 | 0.9 |
| 247.5 | 0.5 | 0.5 | 0.5 | 0.5 | 0.7 | 0.6 | 0.6 | 0.6 |
| 270.0 | 0.5 | 0.5 | 0.5 | 0.5 | 0.5 | 0.5 | 0.5 | 0.5 |
| 292.5 | 0.5 | 0.5 | 0.5 | 0.5 | 0.5 | 0.5 | 0.5 | 0.5 |
| 315.0 | 0.5 | 0.5 | 0.5 | 0.5 | 0.5 | 0.5 | 0.5 | 0.5 |
| 337.5 | 0.5 | 0.5 | 0.5 | 0.5 | 0.5 | 0.5 | 0.5 | 0.5 |

DEPTH: 664 TILT: 0 RANGE: 19.9 VOS: 5634

| Bearing | + 0.0 | + 2.8 | + 5.6 | + 8.4 | +11.3 | +14.1 | +16.9 | +19.7 |
|---|---|---|---|---|---|---|---|---|
| 0.0 | 2.5 | 3.4 | 3.6 | 7.6 | 7.6 | 7.5 | 3.7 | 2.9 |
| 22.5 | 2.9 | 2.7 | 2.7 | 2.7 | 2.7 | 2.7 | 2.5 | 2.4 |
| 45.0 | 2.4 | 2.3 | 2.2 | 2.1 | 2.0 | 2.0 | 2.0 | 1.9 |
| 67.5 | 1.9 | 1.9 | 1.9 | 1.8 | 1.8 | 1.6 | 1.6 | 1.5 |
| 90.0 | 1.4 | 1.4 | 1.4 | 1.3 | 1.3 | 1.3 | 1.3 | 1.3 |
| 112.5 | 1.2 | 1.1 | 1.0 | 0.9 | 0.8 | 0.8 | 0.8 | 0.8 |
| 135.0 | 0.8 | 0.8 | 0.8 | 0.8 | 0.8 | 0.8 | 0.8 | 0.8 |
| 157.5 | 0.8 | 0.8 | 0.8 | 0.8 | 0.8 | 0.8 | 0.8 | 0.8 |
| 180.0 | 0.8 | 0.8 | 0.8 | 0.8 | 0.8 | 0.8 | 0.8 | 0.8 |
| 202.5 | 1.0 | 1.0 | 1.0 | 1.0 | 0.9 | 0.9 | 0.9 | 0.9 |
| 225.0 | 1.1 | 1.1 | 1.1 | 1.0 | 1.0 | 1.1 | 1.1 | 1.1 |
| 247.5 | 1.0 | 1.1 | 1.0 | 1.1 | 1.0 | 1.0 | 1.0 | 1.0 |
| 270.0 | 1.8 | 1.9 | 2.0 | 2.0 | 1.3 | 1.3 | 1.8 | 1.8 |
| 292.5 | 2.1 | 2.1 | 2.2 | 2.3 | 2.0 | 2.0 | 2.1 | 2.1 |
| 315.0 | 2.4 | 2.4 | 2.4 | 2.9 | 2.4 | 2.4 | 2.4 | 2.4 |
| 337.5 | 2.8 | 2.6 | 2.5 | 2.5 | 2.4 | 2.9 | 2.9 | 2.9 |
| | | | | | | 2.5 | 2.5 | 2.5 |

DEPTH: 665 TILT: 0 RANGE: 19.9 VOS: 5634

| Bearing | + 0.0 | + 2.8 | + 5.6 | + 8.4 | +11.3 | +14.1 | +16.9 | +19.7 |
|---|---|---|---|---|---|---|---|---|
| 0.0 | 1.7 | 1.7 | 1.7 | 1.7 | 1.7 | 1.7 | 1.7 | 1.7 |
| 22.5 | 1.7 | 1.6 | 1.5 | 1.5 | 1.5 | 1.5 | 1.4 | 1.4 |
| 45.0 | 1.4 | 1.4 | 1.4 | 1.3 | 1.3 | 1.2 | 1.2 | 1.2 |
| 67.5 | 1.2 | 1.2 | 1.2 | 1.2 | 1.2 | 1.3 | 1.3 | 1.4 |
| 90.0 | 1.4 | 1.4 | 1.4 | 1.5 | 1.5 | 1.5 | 1.5 | 1.5 |
| 112.5 | 1.5 | 1.5 | 1.5 | 1.5 | 1.5 | 1.5 | 1.5 | 1.5 |
| 135.0 | 1.5 | 1.5 | 1.5 | 1.5 | 1.5 | 1.5 | 1.5 | 1.5 |
| 157.5 | 1.5 | 1.5 | 1.5 | 1.5 | 1.5 | 1.5 | 1.5 | 1.5 |
| 180.0 | 1.7 | 1.7 | 1.7 | 1.6 | 1.6 | 1.6 | 1.6 | 1.7 |
| 202.5 | 1.8 | 1.8 | 1.8 | 1.8 | 1.8 | 1.8 | 1.8 | 1.8 |
| 225.0 | 1.8 | 1.8 | 1.8 | 1.8 | 1.8 | 1.8 | 1.8 | 1.8 |
| 247.5 | 1.8 | 1.8 | 1.8 | 1.8 | 1.8 | 1.8 | 1.8 | 1.8 |
| 270.0 | 1.7 | 1.6 | 1.5 | 1.8 | 1.8 | 1.8 | 1.8 | 1.8 |
| 292.5 | 1.5 | 1.5 | 1.5 | 1.5 | 1.5 | 1.5 | 1.5 | 1.5 |
| 315.0 | 1.5 | 1.5 | 1.5 | 1.5 | 1.5 | 1.5 | 1.5 | 1.5 |
| 337.5 | 1.6 | 1.5 | 1.5 | 1.5 | 1.5 | 1.5 | 1.5 | 1.6 |
| | | | | 1.5 | 1.5 | 1.5 | 1.6 | 1.6 |

DEPTH: 666 TILT: 0 RANGE: 19.9 VOS: 5634

| Bearing | + 0.0 | + 2.8 | + 5.6 | + 8.4 | +11.3 | +14.1 | +16.9 | +19.7 |
|---|---|---|---|---|---|---|---|---|
| 0.0 | 0.7 | 0.7 | 0.7 | 0.7 | 0.7 | 0.7 | 0.7 | 0.7 |
| 22.5 | 0.7 | 0.7 | 0.7 | 0.7 | 0.7 | 0.7 | 0.7 | 0.7 |
| 45.0 | 0.7 | 0.7 | 0.7 | 0.7 | 0.7 | 0.8 | 0.8 | 0.8 |
| 67.5 | 0.8 | 0.8 | 0.8 | 0.8 | 0.8 | 0.8 | 0.8 | 0.8 |
| 90.0 | 0.8 | 0.8 | 0.8 | 0.8 | 0.8 | 0.8 | 0.8 | 0.8 |
| 112.5 | 0.8 | 0.8 | 0.9 | 0.9 | 0.9 | 0.9 | 0.9 | 0.9 |
| 135.0 | 0.9 | 0.9 | 1.0 | 1.0 | 1.0 | 1.0 | 1.0 | 1.0 |
| 157.5 | 1.0 | 1.0 | 1.0 | 1.0 | 1.0 | 1.0 | 1.0 | 1.0 |
| 180.0 | 1.0 | 1.0 | 1.0 | 1.0 | 1.0 | 1.0 | 1.0 | 1.0 |
| 202.5 | 1.0 | 1.0 | 1.0 | 1.0 | 1.0 | 1.0 | 1.0 | 1.0 |
| 225.0 | 1.0 | 1.0 | 1.0 | 1.0 | 1.0 | 1.0 | 1.0 | 1.0 |
| 247.5 | 1.0 | 1.0 | 1.0 | 0.9 | 0.9 | 0.9 | 0.9 | 0.9 |
| 270.0 | 0.8 | 0.8 | 0.8 | 0.8 | 0.8 | 0.8 | 0.8 | 0.8 |
| 292.5 | 0.8 | 0.8 | 0.8 | 0.8 | 0.8 | 0.8 | 0.7 | 0.7 |
| 315.0 | 0.7 | 0.7 | 0.7 | 0.7 | 0.7 | 0.7 | 0.7 | 0.7 |
| 337.5 | 0.7 | 0.7 | 0.7 | 0.7 | 0.7 | 0.7 | 0.7 | 0.7 |