REPORT

March 2023

Project Id: ENBR2023-6

Weymouth Compressor Station
Solar Taurus Turbine Emissions Testing

Prepared for

Algonquin Gas Transmission, LLC
Weymouth Compressor Station
890 Winter Street, Suite 320
Waltham, MA 02451

Prepared by

Canomara LLC
PO Box 941
Simsbury, CT 06070

Canomara LLC operated in conformance with all applicable test methods and quality assurance procedures during the test program.

James Canora
Technical Director

March 15, 2023
Date

I certify that to the best of my knowledge:

- Testing data and all corresponding information have been checked for accuracy and completeness.
- Sampling and analysis have been conducted in accordance with the approved protocol and appropriate reference methods (as applicable).
- Any deviations, method modifications, or sampling and analytical anomalies are summarized in the report narrative.

Evan Bali
Project Manager

March 15, 2023
Date

Section **Page**

1 INTRODUCTION 1
1.1 OVERVIEW 1
1.2 CONTACT INFORMATION 1
2 SCOPE OF WORK AND TEST RESULTS 2
3 PROCESS DESCRIPTION 4
4 SAMPLING & ANALYTICAL PROCEDURES 5
4.1 SAMPLING LOCATIONS 6
4.2 NON-METHANE VOC MEASUREMENT DISCUSSION 6
5 QUALITY ASSURANCE 7

Appendix

A Emissions Data
B Process Data
C Laboratory Data
D Example Calculations
E Calibration Data
F Sampling Methods

1 INTRODUCTION

1.1 Overview

Canomara LLC (CM) was contracted by Algonquin Gas Transmission, LLC (AGT), a business unit of Enbridge, Inc. (Enbridge), to conduct compliance emissions testing on one Solar Taurus 60-7802 natural gas fired turbine located at the Weymouth Compressor Station at 54 Bridge Street in North Weymouth, MA. The purpose of the testing was to demonstrate compliance with the testing requirements of Massachusetts Department of Environmental Protection (MassDEP) Plan Approval Application Number SE-15-027 and 40 CFR 60 Subpart KKKK, *Standards of Performance for Stationary Combustion Turbines*. Testing occurred on February 15 and 16, 2023.

1.2 Contact Information

Mr. Evan Bali of CM was the project manager for the test program. Ms. Kathryn Brown of AGT/Enbridge coordinated testing with plant operations and Mr. Benjamin Wankum of AGT/Enbridge was the station supervisor. Mr. Seth Pickering of MassDEP observed the testing. Contact information is summarized below.

Kathryn Brown
Enbridge, Inc.
890 Winter St. Suite 320
Waltham, MA 02451
207.415.5137
kate.brown@enbridge.com

Evan Bali, QSTI
Canomara LLC
PO Box 941
Simsbury, CT 06070
860.865.1166 x802
evan@canomara.com

Seth Pickering
MassDEP BAW
Southeast Region
20 Riverside Drive
Lakeville, MA, 02347
857.202-0116
seth.pickering@state.ma.us

Benjamin Wankum
Enbridge, Inc.
54 Bridge Street
Weymouth, MA
781.277.6060
benjamin.wankum@enbridge.com

2 SCOPE OF WORK AND TEST RESULTS

CM conducted emissions testing on the Solar Taurus 60 in accordance with US EPA test methods. Table 2-1 contains the test matrix.

Table 2-1
Solar Turbine Test Matrix
Weymouth Compressor Station

Parameter	Methods	Tests and Duration	MassDEP Limits [2,3]
Oxygen (O_2) Carbon Dioxide (CO_2)	EPA 3a	3, 60-minute	N/A
Oxides of Nitrogen (NO_x)	EPA 7e	3, 60-minute	9 ppmvd @ 15% O_2
Carbon Monoxide (CO)	EPA 10	3, 60-minute	1.25 ppmvd @ 15% O_2
Volatile Organic Compounds (VOC)	EPA 25a	3, 60-minute	2.4 ppmvd @ 15% O_2
Particulate Matter (PM2.5) [1]	EPA 1-5/202	3, 250-minute	0.0066 lb/MMbtu

1. PM2.5 was conducted in accordance with EPA Method 5 and 202 where total particulate matter is reported as PM2.5 by combining filterable and condensable particulate matter.
2. The subpart KKKK limit is 25 ppmvd @15% O_2.
3. Limits apply to the turbine at ambient temperatures greater than 0 degrees Fahrenheit.

Emissions testing on the Taurus 60 demonstrated compliance with all applicable permit limits. The turbine was operated at an average of 97.1% of the manufacturer's maximum design capacity at ISO conditions, which met the Plan Approval and Subpart KKKK required load conditions. Test summaries are presented in the following tables and complete data sets are located in the appendices.

Table 2-2
NOx, CO and VOC Emissions Summary
February 15, 2023

Parameter	Run 1	Run 2	Run 3	Average	Permit Limit
Fuel Flow (mscfh)	65.7	65.7	65.7	65.7	N/A
Heat Input Rate (mmBtu/hr)(1)	67.0	67.0	67.0	67.0	N/A
Heat Input Capacity (mmBtu/hr)	67.14	67.14	67.14	67.14	N/A
Turbine Load (%)	99.9	99.9	99.9	99.9	75
O_2 (%)	15.23	15.26	15.24	15.24	N/A
NOx (ppm)	6.03	6.14	6.29	6.15	N/A
NOx (ppm @15% O_2)	6.29	6.29	6.45	6.34	9(2)
CO (ppm)	0.40	0.34	0.29	0.34	N/A
CO (ppm @15% O_2)	0.42	0.35	0.30	0.35	1.25
VOC (ppm)	0.30	0.22	0.32	0.28	N/A
VOC (ppm @15% O_2)	0.31	0.23	0.33	0.29	2.4

1. The EPA AP-42 approximate natural gas HHV of 1020 Btu/scf was used to calculate heat input.
2. The subpart KKKK limit is 25 ppm @15%O_2.

Table 2-3
Particulate Matter Emissions Summary
February 15 and 16, 2023

Parameter	Run 1	Run 2	Run 3	Average	Permit Limit
Fuel Flow (mscfh)	65.7	63.1	62.9	63.9	N/A
Heat Input Rate (mmBtu/hr)(1)	67.0	64.3	64.2	65.2	N/A
Heat Input Capacity (mmBtu/hr)	67.14	67.14	67.14	67.14	N/A
Turbine Load (%)	99.9	95.8	95.6	97.1	75
PMPM2.5 - Filterable and Condensable (lb/mmBtu)	0.0002	0.0004	0.00003	0.0002	0.0066

1. The EPA AP-42 approximate natural gas HHV of 1020 Btu/scf was used to calculate heat input.

3 PROCESS DESCRIPTION

The Weymouth Compressor Station is located at 54 Bridge Street in North Weymouth, MA and is one of several compressor stations operated along AGT's interstate natural gas pipeline system.

The Solar Taurus 60-7802 is a natural gas fired simple cycle compressor turbine with a maximum rated capacity of 73.30 MMBtu/hr on a high heating value basis and a maximum fuel firing rate of 71,863 scf/hr at ambient temperatures above 0°F. Testing occurred while the turbine was operating within plus or minus 25% of the manufacturer's maximum design capacity at ISO conditions (67.14 MMBtu/hr) to satisfy the requirements of the Plan Approval and Subpart KKKK. Solar's proprietary "So-Lo-NOx" staged combustion system is utilized for the control of NO_x emissions and the turbine is equipped with an oxidation catalyst for the control of CO and VOC.

Operating parameters were recorded by the facility at minimum of 15-minute intervals during the turbine emissions testing. The following parameters were recorded.

Compressor Data:

- Station gas flow rate (MMSCFD)
- Compressor suction and discharge pressures (PSIG)
- Compressor suction and discharge temperatures (°F)

Turbine Engine Data:

- Fuel flow rate (MSCFH)
- Heat Input (MMBtu/hr, calculated)
- Gas producer speed (NGP %)
- Power turbine speed (NPT %)
- Power turbine inlet and outlet air temperatures (°F)
- Power turbine discharge pressure (PCD PSIG)
- Oxidation catalyst inlet temperature (°F)
- Oxidation catalyst pressure drop (inches H_2O)

4 SAMPLING & ANALYTICAL PROCEDURES

Table 4-1 lists the reference methods which were followed to conduct emissions testing. Appendix F contains detailed descriptions of the methods used during this test program. Table 4-2 contains information about the instrumental reference method analyzers.

Table 4-1
Reference Methods

Method	Description
EPA 1	Sample and Velocity Traverses for Stationary Sources
EPA 2	Determination of Stack Gas Velocity and Volumetric Flow Rate (Type S Pitot Tube)
EPA 3a	Determination of Oxygen and Carbon Dioxide Concentrations In Emissions from Stationary Sources (Instrumental Analyzer Procedure)
EPA 4	Determination of Moisture Content in Stack Gases
EPA 5	Determination of Particulate Matter from Stationary Sources
EPA 7e	Determination of Nitrogen Oxide Emissions from Stationary Sources (Instrumental Analyzer Procedure)
EPA 10	Determination of Carbon Monoxide Emissions from Stationary Sources (Instrumental Analyzer Procedure)
EPA 25a	Determination of Total Gaseous Organic Concentration Using a Flame Ionization Analyzer
EPA 202	Method for Determining Condensable Particulate Emissions from Stationary Sources

Table 4-2
Instrumental Reference Method Analyzers

Constituent	Analyzer	Detector	Span
O_2	TAPI T200H	Paramagnetic	22 %
CO_2	TAPI T300M	Non-Dispersive Infrared	18 %
NO_x	TAPI 200H	Chemiluminescent	12 ppm
CO	TAPI T300M	Non-Dispersive Infrared	12 ppm
VOC	Vig 20	Flame Ionization	10 ppm

4.1 Sampling Locations

Turbine sampling was conducted using five ports on the 96 x 96-inch horizontal exhaust duct prior to the vertical stack. A 3-point stratification test was conducted in accordance with Method 7E at 16.7%, 50.0% and 83.3% of the measurement line. Measurements demonstrated that the turbine is not stratified. A 25-point traverse was used for the particulate testing and the points are presented in Figure 4-1.

Figure 4-1
Turbine Traverse Points

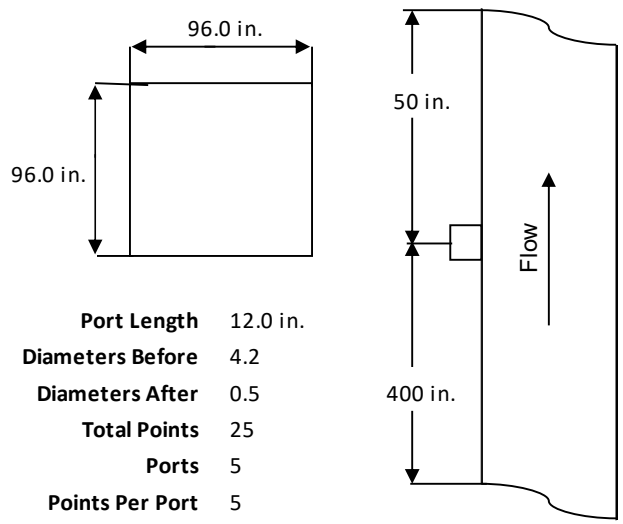

Port Length	12.0 in.
Diameters Before	4.2
Diameters After	0.5
Total Points	25
Ports	5
Points Per Port	5

Traverse Point	Duct Depth	Probe Measurement
1	9.6	21.6
2	28.8	40.8
3	48.0	60.0
4	67.2	79.2
5	86.4	98.4

4.2 Non-Methane VOC Measurement Discussion

Methane concentrations were not subtracted from total hydrocarbons using Method 18 to determine non-methane VOC since total hydrocarbon concentrations were well below the permit limit.

5 QUALITY ASSURANCE

CM's quality assurance program is designed so that work is performed by competent, experienced individuals using properly calibrated equipment, approved procedures for sample collection, recovery, and analysis and proper documentation. This ensures the integrity of data collected, processed, and reported on each project.

All final project deliverables were reviewed by an independent peer reviewer. Additional project specific quality assurance requirements are based on client contracts, local, state, or regional environmental regulations, and quality requirements and guidelines included in published sampling and analytical methods. Specific quality assurance procedures and acceptance criteria for the test methods used can be found in Appendix F.

Appendix A

Emissions Data

Enbridge - Weymouth
Taurus 60 (Stack)

Emissions
Summary Table

Canomara
Source Testing Services

Item	Description	Run 1	Run 2	Run 3	Average	Compliance
Date	*Test Date*	2/15/2023	2/15/2023	2/16/2023		
Start	*Run Start Time*	7:45	12:45	7:15		
Finish	*Run Finish Time*	12:15	17:05	11:35		
θ	*Net Run Time, minutes*	250.0	250.0	250.0	250.0	
N_{tp}	*Net Traversing Points*	25	25	25	25	
D_N	*Nozzle Diameter, inches*	0.435	0.435	0.435	0.435	
C_p	*Pitot Tube Coeficient*	0.840	0.840	0.840	0.840	
Y	*Dry Gas Meter Calibration Factor*	0.983	0.983	0.983	0.983	
$\Delta H_@$	*Dry Gas Meter Orifice Constant*	2.048	2.048	2.048	2.048	
P_{Br}	*Barometric Pressure, inches of Mercury*	29.61	30.05	29.96	29.87	
ΔH	*Average orifice meter Differential, inches H_2O*	2.30	2.18	2.51	2.33	
V_m	*Dry Gas Meter Volume Sampled, cubic feet*	203.543	201.901	216.417	207.287	
t_m	*Average Dry Gas Meter Temperature, °F*	54.0	63.0	67.5	61.5	
V_{mstd}	*Dry Gas Meter Volume Sampled, dscf*	204.559	202.308	214.545	207.137	
V_{lc}	*Total Moisture Liquid collected, ml*	292	292	289	291	
V_{wstd}	*Volume of Water Vapor, standard cubic feet*	13.74	13.74	13.60	13.69	
% H_2O_{sat}	*Moisture Saturation at Stack Gas Temperature, %*	100.0	100.0	100.0	100.0	
% H_2O_{calc}	*Calculated Moisture Content of Stack Gas, %*	6.3	6.4	6.0	6.2	
M_{fd}	*Dry Mole Fraction*	0.937	0.936	0.940	0.938	
%CO_2	*Carbon Dioxide, %*	3.20	3.15	3.20	3.18	
%O_2	*Oxygen, %*	15.24	15.14	15.15	15.18	
% CO + N_2	*Carbon Monoxide & Nitrogen, %*	81.6	81.7	81.7	81.6	
% EA	*Percent Excess Air, %*	241.5	234.7	235.9	237.4	
M_d	*Dry Molecular Weight, lb/lb-Mole*	29.12	29.11	29.12	29.12	
M_s	*Wet Molecular Weight, lb/lb-Mole*	28.42	28.40	28.46	28.43	
P_g	*Flue Gas Static Pressure, inches of H_2O*	1.60	1.60	1.60	1.60	
P_s	*Absolute Flue Gas Pressure, inches of Mercury*	29.73	30.17	30.08	29.99	
T_s	*Average Stack Gas Temperature, °F*	942.4	937.2	956.3	945.3	
Avg √ΔP	*Average Square Root Velocity Head, inches of H_2O*	0.401	0.388	0.417	0.402	
A_s	*Stack Crossectional Area, square feet*	64.0	64.0	64.0	64.0	
%I	*Percent Isokinetic of Sampling Rate, %*	101.6	102.9	102.1	102.2	**90% - 110%**
FLOW						
v_s	*Average Stack Gas Velocity, fps*	37.1	35.6	38.5	37.1	
Q_{aw}	*Actual Wet Volumetric Flue Gas Flow Rate, acfm*	142,502	136,733	147,934	142,390	
Q_{sw}	*Standard Wet Volumetric Flue Gas Flow Rate, scfm*	53,307	52,097	55,441	53,615	
$Q_{sw\ (scfh)}$	*Standard Wet Volumetric Flue Gas Flow Rate, scfh*	3,198,411	3,125,835	3,326,488	3,216,911	
Q_{sd}	*Standard Dry Volumetric Flow Rate, dscfm*	49,951	48,784	52,136	50,290	
$Q_{sd\ (dscfh)}$	*Standard Dry Volumetric Flow Rate, dscfh*	2,997,078	2,927,021	3,128,187	3,017,429	
FUEL						
Fuel	*Fuel Type*	Natural Gas	Natural Gas	Natural Gas		
F_d	*F-Factor, dscf/mmBtu @ %O_2*	8710	8710	8710	8710	
LOAD DATA						
F_{mcf}	*Fuel Flow, mcf*	65.7	63.1	62.9	63.9	
R_{mmBtu}	*Heat Input Rate, mmBtu/hr*	67.0	64.3	64.2	65.2	
C_{mmBtu}	*Heat Input Capacity, mmBtu/hr*	67.1	67.1	67.1	67.1	
$L_{\%}$	*Load, %*	99.9	95.8	95.6	97.1	**75**
PARTICULATE						
M_{TSP}	*TSP filter weight gain, mg*	0.3	0.3	0.3	0.3	
$m_{a\ TSP}$	*Mass of TSP recovery acetone after evaporation, mg*	0.5	0.5	0.5	0.5	
$V_{aw\ TSP}$	*Volume of acetone used for TSP sample recovery, ml*	45	38	50	44.3	
W_a	*Mass of acetone blank residue, mg*	0.8	0.8	0.8	0.8	
V_a	*Volume of acetone blank, ml*	56	56	56	56.0	
W_{TSP}	*Blank Corrected filterable TSP catch weight, mg*	0.2	0.3	0.1	0.2	
$E_{TSP\ (lb/hr)}$	*Filterable TSP Emission Rate, pounds/hr*	0.005	0.008	0.003	0.005	
$E_{TSP\ (lb/mmBtu)}$	*Filterable TSP Emission Rate, pounds/mmBtu*	0.0001	0.0001	0.00003	0.0001	**0.0066**
m_o	*Mass of organic CPM, mg*	1.2	1.3	1.0	1.2	
m_i	*Mass of inorganic CPM, mg*	1.2	1.5	1.0	1.2	
m_{ob}	*Mass of organic CPM in field train revovery blank, mg*	1.0	1.0	1.0	1.0	
m_{ib}	*Mass of inorganic CPM in field train revovery blank, mg*	1.0	1.0	1.0	1.0	
m_{fb}	*Mass of total CPM in field train recovery blank, mg*	2.0	2.0	2.0	2.0	
m_{cpm}	*Mass of blank corrected total CPM, mg*	0.4	0.8	0.0	0.4	
$E_{CPM\ (lb/hr)}$	*CPM Emission Rate, pounds/hr*	0.013	0.025	0.000	0.013	
$E_{CPM\ (lb/mmBtu)}$	*CPM Emission Rate, pounds/mmBtu*	0.0001	0.0003	0.0000	0.0001	
$W_{t\ TSP}$	*Total TSP Catch Weight, mg*	0.6	1.1	0.1	0.6	
$E_{t\ TSP\ (lb/hr)}$	*Total TSP Emission Rate, pounds/hr*	0.018	0.034	0.003	0.018	
$E_{t\ TSP\ (lb/mmBtu)}$	*Total TSP Emission Rate, pounds/mmBtu*	0.0002	0.0004	0.00003	0.00020	**0.0066**

Enbridge - Weymouth
Taurus 60 (Stack)

Emissions
Summary Table

Canomara
Source Testing Services

Item	Description	Run 1	Run 2	Run 3	Average	Compliance
INSTRUMENTAL REFERENCE METHODS						
Date	*Test Date*	2/15/2023	2/15/2023	2/15/2023		
Time	*Run Time*	7:50-8:50	9:00-10:00	10:10-11:10		
$O_{2\ \%}$	*Oxygen, %*	15.23	15.26	15.24	15.24	
$CO_{2\ \%}$	*Carbon Dioxide, %*	3.16	3.19	3.19	3.18	
$NO_{x\ ppm}$	*Oxides of Nitrogen Concentration, ppmd*	6.03	6.14	6.29	6.15	
$NO_{x\ ppm@15\%O2}$	*Oxides of Nitrogen Concentration, ppmd@15%O2*	6.29	6.29	6.45	6.34	**9**
CO_{ppm}	*Carbon Monoxide Concentration, ppmd*	0.40	0.34	0.29	0.34	
$CO_{ppmd@15\%O2}$	*Carbon Monoxide Concentration, ppm-dry@15%O2*	0.42	0.35	0.30	0.35	**1.25**
THC_{ppmw}	*Total Hydrocarbon Concentration as Methane, ppm-wet*	0.28	0.21	0.30	0.26	
$VOC_{ppmd\ as\ C1}$	*VOC as Methane, ppm-dry*	0.30	0.22	0.32	0.28	
$VOC_{ppmd\ as\ C1@15\%O2}$	*VOC as Methane, ppm-dry@15%O2*	0.31	0.23	0.33	0.29	**2.4**

Cylinder Gas	O2 (%)	CO2 (%)	NOx (ppm)	CO (ppm)	THC (ppm)
	Stack	Stack	Stack	Stack	Stack
Zero ID					
Zero Expiration					
Low ID					XC011774B
Low Expiration					1/24/2025
Low Concentration					2.99
Mid ID	CC338233	CC338233	EB0106462	EB0106462	CC29207
Mid Expiration	5/18/2030	5/18/2030	11/28/2025	11/28/2025	11/23/2029
Mid Concentration	9.98	10.02	5.94	6.06	5.04
High ID	CC428437	CC428437	CC427947	CC427947	ALM040608
High Expiration	3/5/2027	3/5/2027	7/7/2024	7/7/2024	3/29/2029
High Concentration	22.13	18.34	12	12.1	8.55

Calibration Error	O2 (%)	CO2 (%)	NOx (ppm)	CO (ppm)	THC (ppm)
15Feb2023 - 07:21:57	Stack	Stack	Stack	Stack	Stack
Zero Response	0.05	0.06	0.09	0.08	0.07
Zero Error (%)	0.23	0.35	0.79	0.7	0.81
Low Response	0	0	0	0	2.95
Low Error (%)	0	0	0	0	-1.3
Mid Response	10.05	10.07	5.99	6.02	5.01
Mid Error (%)	0.35	0.3	0.41	-0.3	-0.62
High Response	22.12	18.23	12.01	12.05	8.48
High Error (%)	-0.04	-0.59	0.1	-0.41	-0.87

Initial Bias	O2 (%)	CO2 (%)	NOx (ppm)	CO (ppm)	THC (ppm)
15Feb2023 - 07:28:40	Stack	Stack	Stack	Stack	Stack
Zero Response	0.05	0.04	0.09	0.14	0.07
Zero Bias (%)	0.01	-0.13	-0.01	0.5	0
Span Concentration	9.98	10.02	5.94	6.06	5.04
Span Response	10.01	10.18	6.02	5.99	5.01
Span Bias (%)	-0.2	0.59	0.26	-0.26	0

Final Bias & Drift	O2 (%)	CO2 (%)	NOx (ppm)	CO (ppm)	THC (ppm)
15Feb2023 - 08:55:40	Stack	Stack	Stack	Stack	Stack
Zero Response	0.09	0.03	0.2	0.14	0.1
Zero Bias (%)	0.17	-0.18	0.87	0.45	0.38
Zero Drift (%)	0.16	-0.05	0.88	-0.05	0.38
Span Concentration	9.98	10.02	5.94	6.06	5.04
Span Response	9.92	10.1	6.06	6.04	5.07
Span Bias (%)	-0.6	0.16	0.6	0.11	0.73
Span Drift (%)	-0.4	-0.43	0.34	0.37	0.73

Results	O2 (%)	CO2 (%)	NOx (ppm)	CO (ppm)	THC (ppm)
	Stack	Stack	Stack	Stack	Stack
Corrected Averages	15.23	3.16	6.03	0.4	0.28

Log Averages	O2 (%)	CO2 (%)	NOx (ppm)	CO (ppm)	THC (ppm)
	Stack	Stack	Stack	Stack	Stack
15Feb2023 - 07:51:10	15.18	3.23	5.99	0.53	0.29
15Feb2023 - 07:52:10	15.18	3.2	5.99	0.55	1.46
15Feb2023 - 07:53:10	15.18	3.21	6.05	0.58	1.6
15Feb2023 - 07:54:10	15.18	3.23	6.19	0.56	0.97
15Feb2023 - 07:55:10	15.18	3.2	6.24	0.64	0.66
15Feb2023 - 07:56:10	15.18	3.24	6.16	0.78	0.55
15Feb2023 - 07:57:10	15.18	3.23	6.09	0.76	0.51
15Feb2023 - 07:58:10	15.18	3.21	6.12	0.7	0.4
15Feb2023 - 07:59:10	15.18	3.22	6.12	0.61	0.24
15Feb2023 - 08:00:10	15.18	3.24	6.11	0.53	0.15
15Feb2023 - 08:01:10	15.19	3.23	6.1	0.55	0.13
15Feb2023 - 08:02:10	15.19	3.22	6.09	0.52	0.09
15Feb2023 - 08:03:10	15.18	3.21	6.15	0.51	0.2
15Feb2023 - 08:04:10	15.19	3.24	6.15	0.44	0.14
15Feb2023 - 08:05:10	15.18	3.21	6.12	0.42	0.16
15Feb2023 - 08:06:10	15.19	3.22	6.16	0.52	0.19
15Feb2023 - 08:07:10	15.18	3.21	6.13	0.6	0.22
15Feb2023 - 08:08:10	15.18	3.22	6.13	0.58	0.27
15Feb2023 - 08:09:10	15.18	3.24	6.16	0.57	0.22
15Feb2023 - 08:10:10	15.19	3.21	6.18	0.55	0.25
15Feb2023 - 08:11:10	15.19	3.23	6.17	0.53	0.27
15Feb2023 - 08:12:10	15.19	3.21	6.2	0.49	0.24
15Feb2023 - 08:13:10	15.18	3.23	6.17	0.47	0.16
15Feb2023 - 08:14:10	15.19	3.22	6.15	0.49	0.14
15Feb2023 - 08:15:10	15.19	3.23	6.18	0.51	0.09
15Feb2023 - 08:16:10	15.19	3.23	6.17	0.47	0.17
15Feb2023 - 08:17:10	15.19	3.22	6.12	0.51	0.22
15Feb2023 - 08:18:10	15.19	3.22	6.08	0.56	0.19
15Feb2023 - 08:19:10	15.19	3.22	6.15	0.55	0.17
15Feb2023 - 08:20:10	15.18	3.22	6.16	0.52	0.31
15Feb2023 - 08:21:10	15.18	3.23	6.09	0.56	0.32
15Feb2023 - 08:22:10	15.18	3.21	6.06	0.54	0.34
15Feb2023 - 08:23:10	15.18	3.2	6.07	0.51	0.31
15Feb2023 - 08:24:10	15.18	3.22	6.09	0.53	0.29
15Feb2023 - 08:25:10	15.18	3.21	6.07	0.57	0.3
15Feb2023 - 08:26:10	15.18	3.2	6.07	0.55	0.32
15Feb2023 - 08:27:10	15.18	3.21	6.1	0.56	0.32
15Feb2023 - 08:28:10	15.17	3.22	6.13	0.51	0.24
15Feb2023 - 08:29:10	15.17	3.23	6.1	0.57	0.22
15Feb2023 - 08:30:10	15.17	3.23	6.04	0.52	0.25
15Feb2023 - 08:31:10	15.17	3.22	6.03	0.46	0.22
15Feb2023 - 08:32:10	15.17	3.22	6.08	0.53	0.15
15Feb2023 - 08:33:10	15.17	3.21	6.1	0.48	0.12
15Feb2023 - 08:34:10	15.18	3.24	6.15	0.5	0.15
15Feb2023 - 08:35:10	15.17	3.24	6.15	0.49	0.21
15Feb2023 - 08:36:10	15.17	3.23	6.13	0.56	0.21
15Feb2023 - 08:37:10	15.17	3.23	6.12	0.49	0.19
15Feb2023 - 08:38:10	15.17	3.23	6.14	0.45	0.18
15Feb2023 - 08:39:10	15.18	3.22	6.2	0.47	0.18
15Feb2023 - 08:40:10	15.17	3.24	6.19	0.46	0.17
15Feb2023 - 08:41:10	15.17	3.24	6.13	0.46	0.15
15Feb2023 - 08:42:10	15.17	3.23	6.09	0.43	0.15
15Feb2023 - 08:43:10	15.17	3.23	6.11	0.59	0.1
15Feb2023 - 08:44:10	15.17	3.22	6.12	0.47	0.17
15Feb2023 - 08:45:10	15.17	3.22	6.15	0.44	0.25
15Feb2023 - 08:46:10	15.17	3.22	6.19	0.45	0.18
15Feb2023 - 08:47:10	15.17	3.24	6.2	0.44	0.18
15Feb2023 - 08:48:10	15.17	3.24	6.19	0.39	0.23
15Feb2023 - 08:49:10	15.17	3.22	6.19	0.42	0.16
15Feb2023 - 08:50:10	15.17	3.24	6.26	0.42	0.15
Average	15.18	3.22	6.13	0.52	0.28

Cylinder Gas	O2 (%)	CO2 (%)	NOx (ppm)	CO (ppm)	THC (ppm)
	Stack	Stack	Stack	Stack	Stack
Zero ID					
Zero Expiration					
Low ID					XC011774B
Low Expiration					1/24/2025
Low Concentration					2.99
Mid ID	CC338233	CC338233	EB0106462	EB0106462	CC29207
Mid Expiration	5/18/2030	5/18/2030	11/28/2025	11/28/2025	11/23/2029
Mid Concentration	9.98	10.02	5.94	6.06	5.04
High ID	CC428437	CC428437	CC427947	CC427947	ALM040608
High Expiration	3/5/2027	3/5/2027	7/7/2024	7/7/2024	3/29/2029
High Concentration	22.13	18.34	12	12.1	8.55

Calibration Error	O2 (%)	CO2 (%)	NOx (ppm)	CO (ppm)	THC (ppm)
15Feb2023 - 07:21:57	Stack	Stack	Stack	Stack	Stack
Zero Response	0.05	0.06	0.09	0.08	0.07
Zero Error (%)	0.23	0.35	0.79	0.7	0.81
Low Response	0	0	0	0	2.95
Low Error (%)	0	0	0	0	-1.3
Mid Response	10.05	10.07	5.99	6.02	5.01
Mid Error (%)	0.35	0.3	0.41	-0.3	-0.62
High Response	22.12	18.23	12.01	12.05	8.48
High Error (%)	-0.04	-0.59	0.1	-0.41	-0.87

Initial Bias	O2 (%)	CO2 (%)	NOx (ppm)	CO (ppm)	THC (ppm)
15Feb2023 - 08:55:40	Stack	Stack	Stack	Stack	Stack
Zero Response	0.09	0.03	0.2	0.14	0.1
Zero Bias (%)	0.17	-0.18	0.87	0.45	0.38
Span Concentration	9.98	10.02	5.94	6.06	5.04
Span Response	9.92	10.1	6.06	6.04	5.07
Span Bias (%)	-0.6	0.16	0.6	0.11	0.73

Final Bias & Drift	O2 (%)	CO2 (%)	NOx (ppm)	CO (ppm)	THC (ppm)
15Feb2023 - 10:07:51	Stack	Stack	Stack	Stack	Stack
Zero Response	0.05	0.04	0.15	0.11	0.12
Zero Bias (%)	-0.01	-0.11	0.46	0.21	0.61
Zero Drift (%)	-0.18	0.07	-0.41	-0.24	0.23
Span Concentration	9.98	10.02	5.94	6.06	5.04
Span Response	9.95	10.06	6.08	6.04	5.09
Span Bias (%)	-0.46	-0.09	0.76	0.18	0.97
Span Drift (%)	0.14	-0.25	0.16	0.07	0.24

Results	O2 (%)	CO2 (%)	NOx (ppm)	CO (ppm)	THC (ppm)
	Stack	Stack	Stack	Stack	Stack
Corrected Averages	15.26	3.19	6.14	0.34	0.21

Log Averages	O2 (%)	CO2 (%)	NOx (ppm)	CO (ppm)	THC (ppm)
	Stack	Stack	Stack	Stack	Stack
15Feb2023 - 09:01:05	15.16	3.22	6.12	0.54	0.21
15Feb2023 - 09:02:05	15.17	3.21	6.14	0.55	0.19
15Feb2023 - 09:03:05	15.17	3.24	6.15	0.58	0.22
15Feb2023 - 09:04:05	15.17	3.23	6.15	0.5	0.21
15Feb2023 - 09:05:05	15.16	3.23	6.18	0.51	0.22
15Feb2023 - 09:06:05	15.17	3.23	6.19	0.53	0.2
15Feb2023 - 09:07:05	15.17	3.26	6.17	0.56	0.23
15Feb2023 - 09:08:05	15.17	3.25	6.18	0.56	0.23
15Feb2023 - 09:09:05	15.17	3.24	6.2	0.48	0.2
15Feb2023 - 09:10:05	15.16	3.23	6.2	0.47	0.14
15Feb2023 - 09:11:05	15.16	3.24	6.18	0.48	0.17
15Feb2023 - 09:12:05	15.16	3.23	6.2	0.53	0.18
15Feb2023 - 09:13:05	15.16	3.23	6.22	0.5	0.13
15Feb2023 - 09:14:05	15.16	3.24	6.21	0.46	0.14
15Feb2023 - 09:15:05	15.16	3.23	6.22	0.47	0.14
15Feb2023 - 09:16:05	15.16	3.21	6.26	0.46	0.12
15Feb2023 - 09:17:05	15.16	3.23	6.25	0.5	0.14
15Feb2023 - 09:18:05	15.15	3.24	6.29	0.54	0.12
15Feb2023 - 09:19:05	15.16	3.25	6.28	0.49	0.06
15Feb2023 - 09:20:05	15.16	3.23	6.27	0.49	0.1
15Feb2023 - 09:21:05	15.16	3.24	6.31	0.47	0.12
15Feb2023 - 09:22:05	15.16	3.23	6.31	0.51	0.15
15Feb2023 - 09:23:05	15.16	3.24	6.29	0.51	0.19
15Feb2023 - 09:24:05	15.15	3.22	6.29	0.49	0.18
15Feb2023 - 09:25:05	15.16	3.23	6.31	0.49	0.19
15Feb2023 - 09:26:05	15.16	3.23	6.31	0.49	0.18
15Feb2023 - 09:27:05	15.16	3.22	6.23	0.47	0.18
15Feb2023 - 09:28:05	15.16	3.25	6.26	0.48	0.17
15Feb2023 - 09:29:05	15.16	3.22	6.28	0.41	0.13
15Feb2023 - 09:30:05	15.16	3.25	6.28	0.48	0.18
15Feb2023 - 09:31:05	15.16	3.23	6.27	0.43	0.17
15Feb2023 - 09:32:05	15.16	3.24	6.27	0.42	0.12
15Feb2023 - 09:33:05	15.16	3.24	6.25	0.45	0.16
15Feb2023 - 09:34:05	15.16	3.22	6.26	0.46	0.15
15Feb2023 - 09:35:05	15.15	3.24	6.28	0.43	0.12
15Feb2023 - 09:36:05	15.15	3.24	6.26	0.45	0.11
15Feb2023 - 09:37:05	15.15	3.24	6.29	0.35	0.11
15Feb2023 - 09:38:05	15.15	3.25	6.33	0.43	0.24
15Feb2023 - 09:39:05	15.16	3.24	6.32	0.44	0.32
15Feb2023 - 09:40:05	15.15	3.24	6.27	0.43	0.35
15Feb2023 - 09:41:05	15.15	3.25	6.25	0.46	0.34
15Feb2023 - 09:42:05	15.15	3.22	6.3	0.43	0.35
15Feb2023 - 09:43:05	15.15	3.23	6.33	0.46	0.37
15Feb2023 - 09:44:05	15.15	3.24	6.26	0.41	0.31
15Feb2023 - 09:45:05	15.14	3.25	6.28	0.4	0.26
15Feb2023 - 09:46:05	15.15	3.24	6.3	0.41	0.18
15Feb2023 - 09:47:05	15.15	3.26	6.28	0.43	0.24
15Feb2023 - 09:48:05	15.15	3.25	6.31	0.4	0.26
15Feb2023 - 09:49:05	15.16	3.23	6.31	0.38	0.19
15Feb2023 - 09:50:05	15.16	3.24	6.29	0.39	0.21
15Feb2023 - 09:51:05	15.16	3.23	6.33	0.41	0.28
15Feb2023 - 09:52:05	15.16	3.23	6.33	0.42	0.31
15Feb2023 - 09:53:05	15.16	3.24	6.35	0.38	0.27
15Feb2023 - 09:54:05	15.15	3.24	6.36	0.4	0.29
15Feb2023 - 09:55:05	15.16	3.25	6.35	0.44	0.29
15Feb2023 - 09:56:05	15.15	3.25	6.35	0.47	0.26
15Feb2023 - 09:57:05	15.16	3.24	6.37	0.39	0.23
15Feb2023 - 09:58:05	15.15	3.25	6.41	0.42	0.26
15Feb2023 - 09:59:05	15.15	3.25	6.4	0.44	0.28
15Feb2023 - 10:00:05	15.15	3.24	6.38	0.4	0.27
Average	15.16	3.24	6.27	0.46	0.21

Cylinder Gas	O2 (%)	CO2 (%)	NOx (ppm)	CO (ppm)	THC (ppm)
	Stack	Stack	Stack	Stack	Stack
Zero ID					
Zero Expiration					
Low ID					XC011774B
Low Expiration					1/24/2025
Low Concentration					2.99
Mid ID	CC338233	CC338233	EB0106462	EB0106462	CC29207
Mid Expiration	5/18/2030	5/18/2030	11/28/2025	11/28/2025	11/23/2029
Mid Concentration	9.98	10.02	5.94	6.06	5.04
High ID	CC428437	CC428437	CC427947	CC427947	ALM040608
High Expiration	3/5/2027	3/5/2027	7/7/2024	7/7/2024	3/29/2029
High Concentration	22.13	18.34	12	12.1	8.55

Calibration Error	O2 (%)	CO2 (%)	NOx (ppm)	CO (ppm)	THC (ppm)
15Feb2023 - 07:21:57	Stack	Stack	Stack	Stack	Stack
Zero Response	0.05	0.06	0.09	0.08	0.07
Zero Error (%)	0.23	0.35	0.79	0.7	0.81
Low Response	0	0	0	0	2.95
Low Error (%)	0	0	0	0	-1.3
Mid Response	10.05	10.07	5.99	6.02	5.01
Mid Error (%)	0.35	0.3	0.41	-0.3	-0.62
High Response	22.12	18.23	12.01	12.05	8.48
High Error (%)	-0.04	-0.59	0.1	-0.41	-0.87

Initial Bias	O2 (%)	CO2 (%)	NOx (ppm)	CO (ppm)	THC (ppm)
15Feb2023 - 10:07:51	Stack	Stack	Stack	Stack	Stack
Zero Response	0.05	0.04	0.15	0.11	0.12
Zero Bias (%)	-0.01	-0.11	0.46	0.21	0.61
Span Concentration	9.98	10.02	5.94	6.06	5.04
Span Response	9.95	10.06	6.08	6.04	5.09
Span Bias (%)	-0.46	-0.09	0.76	0.18	0.97

Final Bias & Drift	O2 (%)	CO2 (%)	NOx (ppm)	CO (ppm)	THC (ppm)
15Feb2023 - 11:17:08	Stack	Stack	Stack	Stack	Stack
Zero Response	0.03	0.06	0.05	0.16	0.14
Zero Bias (%)	-0.1	-0.02	-0.38	0.65	0.81
Zero Drift (%)	-0.09	0.09	-0.84	0.44	0.2
Span Concentration	9.98	10.02	5.94	6.06	5.04
Span Response	9.9	10.12	6.05	6.06	5.11
Span Bias (%)	-0.71	0.24	0.47	0.32	1.17
Span Drift (%)	-0.25	0.33	-0.29	0.14	0.2

Results	O2 (%)	CO2 (%)	NOx (ppm)	CO (ppm)	THC (ppm)
	Stack	Stack	Stack	Stack	Stack
Corrected Averages	15.24	3.19	6.29	0.29	0.3

Log Averages	O2 (%)	CO2 (%)	NOx (ppm)	CO (ppm)	THC (ppm)
	Stack	Stack	Stack	Stack	Stack
15Feb2023 - 10:11:22	15.14	3.25	6.34	0.34	0.34
15Feb2023 - 10:12:22	15.14	3.25	6.37	0.46	0.32
15Feb2023 - 10:13:22	15.14	3.23	6.39	0.37	0.28
15Feb2023 - 10:14:22	15.14	3.23	6.4	0.42	0.23
15Feb2023 - 10:15:22	15.14	3.22	6.42	0.46	0.24
15Feb2023 - 10:16:22	15.13	3.22	6.46	0.45	0.26
15Feb2023 - 10:17:22	15.13	3.26	6.48	0.4	0.29
15Feb2023 - 10:18:22	15.13	3.25	6.53	0.42	0.3
15Feb2023 - 10:19:22	15.14	3.24	6.55	0.41	0.26
15Feb2023 - 10:20:22	15.14	3.24	6.55	0.4	0.27
15Feb2023 - 10:21:22	15.13	3.22	6.52	0.46	0.29
15Feb2023 - 10:22:22	15.13	3.26	6.49	0.39	0.29
15Feb2023 - 10:23:22	15.13	3.26	6.47	0.43	0.32
15Feb2023 - 10:24:22	15.13	3.25	6.48	0.41	0.37
15Feb2023 - 10:25:22	15.13	3.24	6.47	0.38	0.36
15Feb2023 - 10:26:22	15.13	3.26	6.47	0.44	0.38
15Feb2023 - 10:27:22	15.13	3.23	6.51	0.46	0.37
15Feb2023 - 10:28:22	15.13	3.24	6.49	0.42	0.34
15Feb2023 - 10:29:22	15.13	3.25	6.45	0.43	0.35
15Feb2023 - 10:30:22	15.13	3.24	6.45	0.4	0.34
15Feb2023 - 10:31:22	15.13	3.24	6.44	0.5	0.34
15Feb2023 - 10:32:22	15.13	3.25	6.48	0.43	0.29
15Feb2023 - 10:33:22	15.13	3.24	6.52	0.37	0.29
15Feb2023 - 10:34:22	15.13	3.25	6.53	0.41	0.28
15Feb2023 - 10:35:22	15.13	3.26	6.55	0.45	0.27
15Feb2023 - 10:36:22	15.14	3.24	6.55	0.41	0.29
15Feb2023 - 10:37:22	15.13	3.25	6.51	0.37	0.32
15Feb2023 - 10:38:22	15.14	3.25	6.5	0.29	0.31
15Feb2023 - 10:39:22	15.14	3.26	6.48	0.41	0.31
15Feb2023 - 10:40:22	15.13	3.25	6.45	0.38	0.3
15Feb2023 - 10:41:22	15.14	3.25	6.5	0.37	0.33
15Feb2023 - 10:42:22	15.14	3.25	6.54	0.39	0.39
15Feb2023 - 10:43:22	15.13	3.26	6.55	0.44	0.37
15Feb2023 - 10:44:22	15.13	3.24	6.52	0.39	0.33
15Feb2023 - 10:45:22	15.14	3.23	6.52	0.41	0.31
15Feb2023 - 10:46:22	15.14	3.25	6.53	0.48	0.33
15Feb2023 - 10:47:22	15.14	3.25	6.46	0.45	0.31
15Feb2023 - 10:48:22	15.13	3.25	6.34	0.45	0.3
15Feb2023 - 10:49:22	15.14	3.27	6.27	0.41	0.23
15Feb2023 - 10:50:22	15.14	3.26	6.27	0.4	0.26
15Feb2023 - 10:51:22	15.14	3.24	6.28	0.43	0.24
15Feb2023 - 10:52:22	15.13	3.23	6.28	0.41	0.22
15Feb2023 - 10:53:22	15.14	3.22	6.26	0.36	0.24
15Feb2023 - 10:54:22	15.14	3.25	6.3	0.34	0.27
15Feb2023 - 10:55:22	15.15	3.24	6.29	0.43	0.27
15Feb2023 - 10:56:22	15.14	3.23	6.32	0.4	0.29
15Feb2023 - 10:57:22	15.14	3.25	6.32	0.42	0.34
15Feb2023 - 10:58:22	15.14	3.24	6.34	0.44	0.32
15Feb2023 - 10:59:22	15.14	3.22	6.33	0.41	0.28
15Feb2023 - 11:00:22	15.14	3.22	6.35	0.37	0.29
15Feb2023 - 11:01:22	15.14	3.23	6.31	0.43	0.27
15Feb2023 - 11:02:22	15.14	3.26	6.26	0.4	0.31
15Feb2023 - 11:03:22	15.15	3.25	6.28	0.47	0.33
15Feb2023 - 11:04:22	15.13	3.26	6.27	0.36	0.34
15Feb2023 - 11:05:22	15.15	3.21	6.28	0.39	0.3
15Feb2023 - 11:06:22	15.15	3.24	6.3	0.4	0.31
15Feb2023 - 11:07:22	15.14	3.23	6.32	0.4	0.27
15Feb2023 - 11:08:22	15.14	3.22	6.28	0.36	0.24
15Feb2023 - 11:09:22	15.14	3.24	6.26	0.65	0.26
15Feb2023 - 11:10:22	15.15	3.26	6.26	0.62	0.3
Average	15.14	3.24	6.41	0.42	0.3

Cylinder Gas	O2 (%)	CO2 (%)
	Stack	Stack
Zero ID		
Zero Expiration		
Low ID		
Low Expiration		
Low Concentration		
Mid ID	CC338233	CC338233
Mid Expiration	5/18/2030	5/18/2030
Mid Concentration	9.98	10.02
High ID	CC428437	CC428437
High Expiration	3/5/2027	3/5/2027
High Concentration	22.13	18.34

Calibration Error	O2 (%)	CO2 (%)
15Feb2023 - 11:31:20	Stack	Stack
Zero Response	0.05	0.06
Zero Error (%)	0.23	0.35
Low Response	0	0
Low Error (%)	0	0
Mid Response	10.05	10.07
Mid Error (%)	0.35	0.3
High Response	22.12	18.23
High Error (%)	-0.04	-0.59

Initial Bias	O2 (%)	CO2 (%)
15Feb2023 - 12:22:21	Stack	Stack
Zero Response	0.05	0.08
Zero Bias (%)	0.01	0.11
Span Concentration	9.98	10.02
Span Response	10.02	10.06
Span Bias (%)	-0.15	-0.1

Final Bias & Drift	O2 (%)	CO2 (%)
15Feb2023 - 17:09:37	Stack	Stack
Zero Response	0.06	0.11
Zero Bias (%)	0.06	0.26
Zero Drift (%)	0.05	0.15
Span Concentration	9.98	10.02
Span Response	10.1	10.01
Span Bias (%)	0.2	-0.33
Span Drift (%)	0.35	-0.23

Results	O2 (%)	CO2 (%)
	Stack	Stack
Corrected Averages	15.04	3.15

Log Averages	O2 (%) Stack	CO2 (%) Stack
15Feb2023 - 12:46:12	15.14	3.23
15Feb2023 - 12:47:12	15.14	3.23
15Feb2023 - 12:48:12	15.14	3.22
15Feb2023 - 12:49:12	15.14	3.2
15Feb2023 - 12:50:12	15.14	3.21
15Feb2023 - 12:51:12	15.14	3.22
15Feb2023 - 12:52:12	15.14	3.23
15Feb2023 - 12:53:12	15.14	3.22
15Feb2023 - 12:54:12	15.13	3.21
15Feb2023 - 12:55:12	15.14	3.21
15Feb2023 - 12:56:12	15.14	3.19
15Feb2023 - 12:57:12	15.14	3.22
15Feb2023 - 12:58:12	15.14	3.22
15Feb2023 - 12:59:12	15.13	3.2
15Feb2023 - 13:00:12	15.13	3.2
15Feb2023 - 13:01:12	15.13	3.21
15Feb2023 - 13:02:12	15.13	3.19
15Feb2023 - 13:03:12	15.13	3.2
15Feb2023 - 13:04:12	15.12	3.19
15Feb2023 - 13:05:12	15.13	3.2
15Feb2023 - 13:06:12	15.13	3.22
15Feb2023 - 13:07:12	15.13	3.22
15Feb2023 - 13:08:12	15.13	3.23
15Feb2023 - 13:09:12	15.13	3.22
15Feb2023 - 13:10:12	15.13	3.2
15Feb2023 - 13:11:12	15.13	3.2
15Feb2023 - 13:12:12	15.13	3.21
15Feb2023 - 13:13:12	15.13	3.19
15Feb2023 - 13:14:12	15.13	3.22
15Feb2023 - 13:15:12	15.13	3.21
15Feb2023 - 13:16:12	15.14	3.21
15Feb2023 - 13:17:12	15.14	3.2
15Feb2023 - 13:18:12	15.14	3.2
15Feb2023 - 13:19:12	15.13	3.21
15Feb2023 - 13:20:12	15.13	3.21
15Feb2023 - 13:21:12	15.14	3.21
15Feb2023 - 13:22:12	15.14	3.19
15Feb2023 - 13:23:12	15.14	3.2
15Feb2023 - 13:24:12	15.14	3.2
15Feb2023 - 13:25:12	15.13	3.2
15Feb2023 - 13:26:12	15.14	3.2
15Feb2023 - 13:27:12	15.14	3.2
15Feb2023 - 13:28:12	15.14	3.21
15Feb2023 - 13:29:12	15.14	3.22
15Feb2023 - 13:30:12	15.15	3.22
15Feb2023 - 13:31:12	15.14	3.21
15Feb2023 - 13:32:12	15.14	3.22
15Feb2023 - 13:33:12	15.13	3.21
15Feb2023 - 13:34:12	15.13	3.21
15Feb2023 - 13:35:12	15.14	3.21
15Feb2023 - 13:36:12	15.14	3.2
15Feb2023 - 13:37:12	15.14	3.19
15Feb2023 - 13:38:12	15.13	3.21
15Feb2023 - 13:39:12	15.13	3.2
15Feb2023 - 13:40:12	15.13	3.21
15Feb2023 - 13:41:12	15.14	3.2
15Feb2023 - 13:42:12	15.14	3.2
15Feb2023 - 13:43:12	15.14	3.2
15Feb2023 - 13:44:12	15.13	3.21
15Feb2023 - 13:45:12	15.14	3.2
15Feb2023 - 13:46:12	15.14	3.2
15Feb2023 - 13:47:12	15.14	3.22
15Feb2023 - 13:48:12	15.13	3.21
15Feb2023 - 13:49:12	15.14	3.2
15Feb2023 - 13:50:12	15.14	3.21
15Feb2023 - 13:51:12	15.14	3.2
15Feb2023 - 13:52:12	15.14	3.2
15Feb2023 - 13:53:12	15.13	3.2
15Feb2023 - 13:54:12	15.14	3.21
15Feb2023 - 13:55:12	15.14	3.22
15Feb2023 - 13:56:12	15.14	3.22
15Feb2023 - 13:57:12	15.14	3.21
15Feb2023 - 13:58:12	15.13	3.21
15Feb2023 - 13:59:12	15.14	3.21
15Feb2023 - 14:00:12	15.14	3.2
15Feb2023 - 14:01:12	15.14	3.2
15Feb2023 - 14:02:12	15.14	3.19
15Feb2023 - 14:03:12	15.14	3.21
15Feb2023 - 14:04:12	15.14	3.2
15Feb2023 - 14:05:12	15.14	3.19
15Feb2023 - 14:06:12	15.14	3.2
15Feb2023 - 14:07:12	15.13	3.19
15Feb2023 - 14:08:12	15.13	3.21
15Feb2023 - 14:09:12	15.13	3.19
15Feb2023 - 14:10:12	15.13	3.22
15Feb2023 - 14:11:12	15.12	3.21

Log Averages	O2 (%) Stack	CO2 (%) Stack
15Feb2023 - 14:12:12	15.14	3.21
15Feb2023 - 14:13:12	15.14	3.2
15Feb2023 - 14:14:12	15.14	3.2
15Feb2023 - 14:15:12	15.13	3.19
15Feb2023 - 14:16:12	15.14	3.19
15Feb2023 - 14:17:12	15.13	3.19
15Feb2023 - 14:18:12	15.13	3.2
15Feb2023 - 14:19:12	15.13	3.19
15Feb2023 - 14:20:12	15.13	3.18
15Feb2023 - 14:21:12	15.13	3.21
15Feb2023 - 14:22:12	15.13	3.2
15Feb2023 - 14:23:12	15.12	3.22
15Feb2023 - 14:24:12	15.13	3.21
15Feb2023 - 14:25:12	15.13	3.22
15Feb2023 - 14:26:12	15.13	3.21
15Feb2023 - 14:27:12	15.13	3.19
15Feb2023 - 14:28:12	15.13	3.22
15Feb2023 - 14:29:12	15.13	3.2
15Feb2023 - 14:30:12	15.13	3.21
15Feb2023 - 14:31:12	15.13	3.18
15Feb2023 - 14:32:12	15.13	3.21
15Feb2023 - 14:33:12	15.13	3.21
15Feb2023 - 14:34:12	15.13	3.22
15Feb2023 - 14:35:12	15.12	3.2
15Feb2023 - 14:36:12	15.13	3.2
15Feb2023 - 14:37:12	15.12	3.2
15Feb2023 - 14:38:12	15.13	3.21
15Feb2023 - 14:39:12	15.13	3.2
15Feb2023 - 14:40:12	15.12	3.22
15Feb2023 - 14:41:12	15.13	3.21
15Feb2023 - 14:42:12	15.13	3.22
15Feb2023 - 14:43:12	15.13	3.24
15Feb2023 - 14:44:12	15.13	3.22
15Feb2023 - 14:45:12	15.13	3.2
15Feb2023 - 14:46:12	15.12	3.22
15Feb2023 - 14:47:12	15.13	3.22
15Feb2023 - 14:48:12	15.13	3.22
15Feb2023 - 14:49:12	15.13	3.22
15Feb2023 - 14:50:12	15.14	3.22
15Feb2023 - 14:51:12	15.13	3.22
15Feb2023 - 14:52:12	15.13	3.2
15Feb2023 - 14:53:12	15.14	3.21
15Feb2023 - 14:54:12	15.13	3.23
15Feb2023 - 14:55:12	15.13	3.22
15Feb2023 - 14:56:12	15.13	3.21
15Feb2023 - 14:57:12	15.14	3.21
15Feb2023 - 14:58:12	15.14	3.2
15Feb2023 - 14:59:12	15.14	3.22
15Feb2023 - 15:00:12	15.13	3.2
15Feb2023 - 15:01:12	15.13	3.21
15Feb2023 - 15:02:12	15.13	3.22
15Feb2023 - 15:03:12	15.13	3.24
15Feb2023 - 15:04:12	15.13	3.23
15Feb2023 - 15:05:12	15.13	3.22
15Feb2023 - 15:06:12	15.13	3.2
15Feb2023 - 15:07:12	15.13	3.22
15Feb2023 - 15:08:12	15.14	3.21
15Feb2023 - 15:09:12	15.13	3.2
15Feb2023 - 15:10:12	15.12	3.21
15Feb2023 - 15:11:12	15.13	3.22
15Feb2023 - 15:12:12	15.13	3.21
15Feb2023 - 15:13:12	15.12	3.19
15Feb2023 - 15:14:12	15.13	3.22
15Feb2023 - 15:15:12	15.13	3.22
15Feb2023 - 15:16:12	15.13	3.22
15Feb2023 - 15:17:12	15.13	3.2
15Feb2023 - 15:18:12	15.12	3.2
15Feb2023 - 15:19:12	15.13	3.22
15Feb2023 - 15:20:12	15.13	3.21
15Feb2023 - 15:21:12	15.12	3.21
15Feb2023 - 15:22:12	15.12	3.22
15Feb2023 - 15:23:12	15.12	3.21
15Feb2023 - 15:24:12	15.12	3.22
15Feb2023 - 15:25:12	15.12	3.23
15Feb2023 - 15:26:12	15.13	3.22
15Feb2023 - 15:27:12	15.13	3.2
15Feb2023 - 15:28:12	15.13	3.21
15Feb2023 - 15:29:12	15.13	3.21
15Feb2023 - 15:30:12	15.12	3.18
15Feb2023 - 15:31:12	15.13	3.23
15Feb2023 - 15:32:12	15.09	3.2
15Feb2023 - 15:33:12	15.05	3.2
15Feb2023 - 15:34:12	15.15	3.23
15Feb2023 - 15:35:12	15.16	3.24
15Feb2023 - 15:36:12	15.16	3.22
15Feb2023 - 15:37:12	15.15	3.22

Log Averages	O2 (%) Stack	CO2 (%) Stack
15Feb2023 - 15:38:12	15.16	3.26
15Feb2023 - 15:39:12	15.16	3.23
15Feb2023 - 15:40:12	15.16	3.22
15Feb2023 - 15:41:12	15.15	3.22
15Feb2023 - 15:42:12	15.15	3.25
15Feb2023 - 15:43:12	15.15	3.24
15Feb2023 - 15:44:12	15.16	3.25
15Feb2023 - 15:45:12	15.15	3.23
15Feb2023 - 15:46:12	15.15	3.25
15Feb2023 - 15:47:12	15.16	3.25
15Feb2023 - 15:48:12	15.15	3.24
15Feb2023 - 15:49:12	15.15	3.24
15Feb2023 - 15:50:12	15.15	3.25
15Feb2023 - 15:51:12	15.15	3.25
15Feb2023 - 15:52:12	15.15	3.23
15Feb2023 - 15:53:12	15.15	3.23
15Feb2023 - 15:54:12	15.16	3.25
15Feb2023 - 15:55:12	15.15	3.26
15Feb2023 - 15:56:12	15.15	3.25
15Feb2023 - 15:57:12	15.15	3.26
15Feb2023 - 15:58:12	15.15	3.24
15Feb2023 - 15:59:12	15.15	3.24
15Feb2023 - 16:00:12	15.15	3.23
15Feb2023 - 16:01:12	15.15	3.23
15Feb2023 - 16:02:12	15.15	3.23
15Feb2023 - 16:03:12	15.15	3.26
15Feb2023 - 16:04:12	15.15	3.25
15Feb2023 - 16:05:12	15.15	3.22
15Feb2023 - 16:06:12	15.14	3.24
15Feb2023 - 16:07:12	15.15	3.22
15Feb2023 - 16:08:12	15.15	3.24
15Feb2023 - 16:09:12	15.14	3.25
15Feb2023 - 16:10:12	15.14	3.23
15Feb2023 - 16:11:12	15.14	3.26
15Feb2023 - 16:12:12	15.14	3.23
15Feb2023 - 16:13:12	15.14	3.23
15Feb2023 - 16:14:12	15.15	3.23
15Feb2023 - 16:15:12	15.15	3.26
15Feb2023 - 16:16:12	15.14	3.25
15Feb2023 - 16:17:12	15.14	3.24
15Feb2023 - 16:18:12	15.14	3.24
15Feb2023 - 16:19:12	15.14	3.24
15Feb2023 - 16:20:12	15.14	3.23
15Feb2023 - 16:21:12	15.15	3.24
15Feb2023 - 16:22:12	15.14	3.25
15Feb2023 - 16:23:12	15.14	3.22
15Feb2023 - 16:24:12	15.14	3.26
15Feb2023 - 16:25:12	15.14	3.25
15Feb2023 - 16:26:12	15.14	3.23
15Feb2023 - 16:27:12	15.14	3.24
15Feb2023 - 16:28:12	15.14	3.24
15Feb2023 - 16:29:12	15.14	3.24
15Feb2023 - 16:30:12	15.14	3.25
15Feb2023 - 16:31:12	15.14	3.25
15Feb2023 - 16:32:12	15.14	3.23
15Feb2023 - 16:33:12	15.14	3.24
15Feb2023 - 16:34:12	15.15	3.23
15Feb2023 - 16:35:12	15.15	3.22
15Feb2023 - 16:36:12	15.14	3.23
15Feb2023 - 16:37:12	15.14	3.24
15Feb2023 - 16:38:12	15.14	3.24
15Feb2023 - 16:39:12	15.15	3.24
15Feb2023 - 16:40:12	15.14	3.24
15Feb2023 - 16:41:12	15.14	3.24
15Feb2023 - 16:42:12	15.15	3.25
15Feb2023 - 16:43:12	15.14	3.27
15Feb2023 - 16:44:12	15.14	3.21
15Feb2023 - 16:45:12	15.15	3.24
15Feb2023 - 16:46:12	15.16	3.23
15Feb2023 - 16:47:12	15.15	3.23
15Feb2023 - 16:48:12	15.14	3.23
15Feb2023 - 16:49:12	15.15	3.25
15Feb2023 - 16:50:12	15.14	3.25
15Feb2023 - 16:51:12	15.14	3.25
15Feb2023 - 16:52:12	15.14	3.24
15Feb2023 - 16:53:12	15.14	3.25
15Feb2023 - 16:54:12	15.15	3.25
15Feb2023 - 16:55:12	15.15	3.25
15Feb2023 - 16:56:12	15.14	3.25
15Feb2023 - 16:57:12	15.14	3.25
15Feb2023 - 16:58:12	15.14	3.25
15Feb2023 - 16:59:12	15.14	3.26
15Feb2023 - 17:00:12	15.14	3.23
15Feb2023 - 17:01:12	15.15	3.25
15Feb2023 - 17:02:12	15.14	3.28
15Feb2023 - 17:03:12	15.14	3.25

Log Averages	O2 (%)	CO2 (%)
	Stack	Stack
15Feb2023 - 17:04:12	15.14	3.24
15Feb2023 - 17:05:12	15.13	3.25
15Feb2023 - 17:05:18	15.14	3.27
Average	15.14	3.22

Cylinder Gas	O2 (%)	CO2 (%)
	Stack	Stack
Zero ID		
Zero Expiration		
Low ID		
Low Expiration		
Low Concentration		
Mid ID	CC338233	CC338233
Mid Expiration	5/18/2030	5/18/2030
Mid Concentration	9.98	10.02
High ID	CC428437	CC428437
High Expiration	3/5/2027	3/5/2027
High Concentration	22.13	18.34

Calibration Error	O2 (%)	CO2 (%)
16Feb2023 - 06:50:25	Stack	Stack
Zero Response	0.06	0.07
Zero Error (%)	0.25	0.41
Low Response	0	0
Low Error (%)	0	0
Mid Response	10.01	9.99
Mid Error (%)	0.15	-0.14
High Response	22.16	18.35
High Error (%)	0.16	0.03

Initial Bias	O2 (%)	CO2 (%)
16Feb2023 - 06:55:49	Stack	Stack
Zero Response	0.05	0.07
Zero Bias (%)	-0.04	-0.02
Span Concentration	9.98	10.02
Span Response	9.97	9.95
Span Bias (%)	-0.18	-0.27

Final Bias & Drift	O2 (%)	CO2 (%)
16Feb2023 - 11:42:57	Stack	Stack
Zero Response	0.09	0.08
Zero Bias (%)	0.15	0.05
Zero Drift (%)	0.19	0.07
Span Concentration	9.98	10.02
Span Response	10.05	9.92
Span Bias (%)	0.2	-0.38
Span Drift (%)	0.38	-0.11

Results	O2 (%)	CO2 (%)
	Stack	Stack
Corrected Averages	15.15	3.2

Log Averages	O2 (%) Stack	CO2 (%) Stack
16Feb2023 - 07:16:08	15.15	3.25
16Feb2023 - 07:17:08	15.15	3.26
16Feb2023 - 07:18:08	15.16	3.25
16Feb2023 - 07:19:08	15.16	3.23
16Feb2023 - 07:20:08	15.15	3.26
16Feb2023 - 07:21:08	15.15	3.24
16Feb2023 - 07:22:08	15.16	3.24
16Feb2023 - 07:23:08	15.16	3.21
16Feb2023 - 07:24:08	15.15	3.25
16Feb2023 - 07:25:08	15.15	3.22
16Feb2023 - 07:26:08	15.15	3.25
16Feb2023 - 07:27:08	15.15	3.24
16Feb2023 - 07:28:08	15.16	3.23
16Feb2023 - 07:29:08	15.15	3.23
16Feb2023 - 07:30:08	15.15	3.23
16Feb2023 - 07:31:08	15.16	3.23
16Feb2023 - 07:32:08	15.16	3.24
16Feb2023 - 07:33:08	15.16	3.23
16Feb2023 - 07:34:08	15.16	3.24
16Feb2023 - 07:35:08	15.16	3.24
16Feb2023 - 07:36:08	15.15	3.23
16Feb2023 - 07:37:08	15.15	3.22
16Feb2023 - 07:38:08	15.15	3.23
16Feb2023 - 07:39:08	15.16	3.24
16Feb2023 - 07:40:08	15.15	3.22
16Feb2023 - 07:41:08	15.15	3.22
16Feb2023 - 07:42:08	15.15	3.22
16Feb2023 - 07:43:08	15.16	3.24
16Feb2023 - 07:44:08	15.17	3.25
16Feb2023 - 07:45:08	15.16	3.25
16Feb2023 - 07:46:08	15.16	3.24
16Feb2023 - 07:47:08	15.16	3.24
16Feb2023 - 07:48:08	15.16	3.24
16Feb2023 - 07:49:08	15.15	3.22
16Feb2023 - 07:50:08	15.16	3.22
16Feb2023 - 07:51:08	15.16	3.23
16Feb2023 - 07:52:08	15.16	3.25
16Feb2023 - 07:53:08	15.16	3.24
16Feb2023 - 07:54:08	15.16	3.23
16Feb2023 - 07:55:08	15.17	3.24
16Feb2023 - 07:56:08	15.16	3.24
16Feb2023 - 07:57:08	15.16	3.23
16Feb2023 - 07:58:08	15.17	3.23
16Feb2023 - 07:59:08	15.16	3.24
16Feb2023 - 08:00:08	15.16	3.22
16Feb2023 - 08:01:08	15.17	3.25
16Feb2023 - 08:02:08	15.17	3.24
16Feb2023 - 08:03:08	15.16	3.23
16Feb2023 - 08:04:08	15.16	3.25
16Feb2023 - 08:05:08	15.17	3.22
16Feb2023 - 08:06:08	15.17	3.23
16Feb2023 - 08:07:08	15.17	3.2
16Feb2023 - 08:08:08	15.17	3.24
16Feb2023 - 08:09:08	15.17	3.22
16Feb2023 - 08:10:08	15.17	3.24
16Feb2023 - 08:11:08	15.17	3.24
16Feb2023 - 08:12:08	15.17	3.23
16Feb2023 - 08:13:08	15.17	3.23
16Feb2023 - 08:14:08	15.17	3.23
16Feb2023 - 08:15:08	15.17	3.23
16Feb2023 - 08:16:08	15.17	3.24
16Feb2023 - 08:17:08	15.17	3.23
16Feb2023 - 08:18:08	15.17	3.21
16Feb2023 - 08:19:08	15.17	3.24
16Feb2023 - 08:20:08	15.17	3.23
16Feb2023 - 08:21:08	15.17	3.23
16Feb2023 - 08:22:08	15.18	3.23
16Feb2023 - 08:23:08	15.17	3.23
16Feb2023 - 08:24:08	15.17	3.22
16Feb2023 - 08:25:08	15.17	3.24
16Feb2023 - 08:26:08	15.18	3.21
16Feb2023 - 08:27:08	15.17	3.23
16Feb2023 - 08:28:08	15.18	3.22
16Feb2023 - 08:29:08	15.17	3.22
16Feb2023 - 08:30:08	15.17	3.22
16Feb2023 - 08:31:08	15.17	3.25
16Feb2023 - 08:32:08	15.17	3.24
16Feb2023 - 08:33:08	15.18	3.21
16Feb2023 - 08:34:08	15.18	3.23
16Feb2023 - 08:35:08	15.18	3.22
16Feb2023 - 08:36:08	15.18	3.22
16Feb2023 - 08:37:08	15.18	3.22
16Feb2023 - 08:38:08	15.17	3.22
16Feb2023 - 08:39:08	15.18	3.23
16Feb2023 - 08:40:08	15.17	3.22
16Feb2023 - 08:41:08	15.17	3.22

Log Averages	O2 (%) Stack	CO2 (%) Stack
16Feb2023 - 08:42:08	15.17	3.22
16Feb2023 - 08:43:08	15.17	3.24
16Feb2023 - 08:44:08	15.17	3.23
16Feb2023 - 08:45:08	15.17	3.22
16Feb2023 - 08:46:08	15.17	3.2
16Feb2023 - 08:47:08	15.17	3.23
16Feb2023 - 08:48:08	15.17	3.23
16Feb2023 - 08:49:08	15.17	3.23
16Feb2023 - 08:50:08	15.16	3.22
16Feb2023 - 08:51:08	15.16	3.24
16Feb2023 - 08:52:08	15.16	3.22
16Feb2023 - 08:53:08	15.17	3.22
16Feb2023 - 08:54:08	15.17	3.23
16Feb2023 - 08:55:08	15.17	3.25
16Feb2023 - 08:56:08	15.17	3.22
16Feb2023 - 08:57:08	15.17	3.23
16Feb2023 - 08:58:08	15.17	3.22
16Feb2023 - 08:59:08	15.17	3.22
16Feb2023 - 09:00:08	15.18	3.24
16Feb2023 - 09:01:08	15.17	3.22
16Feb2023 - 09:02:08	15.17	3.23
16Feb2023 - 09:03:08	15.17	3.23
16Feb2023 - 09:04:08	15.17	3.23
16Feb2023 - 09:05:08	15.17	3.22
16Feb2023 - 09:06:08	15.17	3.22
16Feb2023 - 09:07:08	15.17	3.24
16Feb2023 - 09:08:08	15.17	3.23
16Feb2023 - 09:09:08	15.18	3.22
16Feb2023 - 09:10:08	15.18	3.24
16Feb2023 - 09:11:08	15.17	3.22
16Feb2023 - 09:12:08	15.17	3.23
16Feb2023 - 09:13:08	15.17	3.21
16Feb2023 - 09:14:08	15.17	3.23
16Feb2023 - 09:15:08	15.17	3.23
16Feb2023 - 09:16:08	15.17	3.2
16Feb2023 - 09:17:08	15.18	3.22
16Feb2023 - 09:18:08	15.18	3.2
16Feb2023 - 09:19:08	15.18	3.24
16Feb2023 - 09:20:08	15.18	3.23
16Feb2023 - 09:21:08	15.18	3.22
16Feb2023 - 09:22:08	15.18	3.22
16Feb2023 - 09:23:08	15.18	3.23
16Feb2023 - 09:24:08	15.18	3.21
16Feb2023 - 09:25:08	15.18	3.22
16Feb2023 - 09:26:08	15.17	3.21
16Feb2023 - 09:27:08	15.18	3.23
16Feb2023 - 09:28:08	15.18	3.24
16Feb2023 - 09:29:08	15.18	3.24
16Feb2023 - 09:30:08	15.19	3.21
16Feb2023 - 09:31:08	15.19	3.24
16Feb2023 - 09:32:08	15.18	3.21
16Feb2023 - 09:33:08	15.19	3.21
16Feb2023 - 09:34:08	15.18	3.23
16Feb2023 - 09:35:08	15.18	3.23
16Feb2023 - 09:36:08	15.18	3.2
16Feb2023 - 09:37:08	15.18	3.22
16Feb2023 - 09:38:08	15.17	3.21
16Feb2023 - 09:39:08	15.17	3.22
16Feb2023 - 09:40:08	15.18	3.22
16Feb2023 - 09:41:08	15.18	3.22
16Feb2023 - 09:42:08	15.17	3.22
16Feb2023 - 09:43:08	15.17	3.23
16Feb2023 - 09:44:08	15.18	3.21
16Feb2023 - 09:45:08	15.18	3.23
16Feb2023 - 09:46:08	15.18	3.21
16Feb2023 - 09:47:08	15.19	3.21
16Feb2023 - 09:48:08	15.19	3.21
16Feb2023 - 09:49:08	15.18	3.21
16Feb2023 - 09:50:08	15.17	3.2
16Feb2023 - 09:51:08	15.17	3.22
16Feb2023 - 09:52:08	15.18	3.19
16Feb2023 - 09:53:08	15.18	3.21
16Feb2023 - 09:54:08	15.18	3.21
16Feb2023 - 09:55:08	15.18	3.22
16Feb2023 - 09:56:08	15.17	3.22
16Feb2023 - 09:57:08	15.18	3.22
16Feb2023 - 09:58:08	15.17	3.21
16Feb2023 - 09:59:08	15.17	3.19
16Feb2023 - 10:00:08	15.16	3.21
16Feb2023 - 10:01:08	15.16	3.21
16Feb2023 - 10:02:08	15.17	3.22
16Feb2023 - 10:03:08	15.17	3.21
16Feb2023 - 10:04:08	15.17	3.22
16Feb2023 - 10:05:08	15.17	3.21
16Feb2023 - 10:06:08	15.17	3.21
16Feb2023 - 10:07:08	15.16	3.22

Log Averages	O2 (%) Stack	CO2 (%) Stack
16Feb2023 - 10:08:08	15.17	3.19
16Feb2023 - 10:09:08	15.18	3.22
16Feb2023 - 10:10:08	15.17	3.21
16Feb2023 - 10:11:08	15.17	3.19
16Feb2023 - 10:12:08	15.17	3.21
16Feb2023 - 10:13:08	15.17	3.2
16Feb2023 - 10:14:08	15.17	3.21
16Feb2023 - 10:15:08	15.17	3.23
16Feb2023 - 10:16:08	15.17	3.19
16Feb2023 - 10:17:08	15.17	3.21
16Feb2023 - 10:18:08	15.17	3.21
16Feb2023 - 10:19:08	15.17	3.22
16Feb2023 - 10:20:08	15.17	3.22
16Feb2023 - 10:21:08	15.17	3.2
16Feb2023 - 10:22:08	15.17	3.23
16Feb2023 - 10:23:08	15.17	3.23
16Feb2023 - 10:24:08	15.17	3.21
16Feb2023 - 10:25:08	15.17	3.21
16Feb2023 - 10:26:08	15.17	3.21
16Feb2023 - 10:27:08	15.17	3.23
16Feb2023 - 10:28:08	15.17	3.2
16Feb2023 - 10:29:08	15.17	3.2
16Feb2023 - 10:30:08	15.17	3.22
16Feb2023 - 10:31:08	15.17	3.22
16Feb2023 - 10:32:08	15.17	3.23
16Feb2023 - 10:33:08	15.17	3.21
16Feb2023 - 10:34:08	15.17	3.23
16Feb2023 - 10:35:08	15.17	3.21
16Feb2023 - 10:36:08	15.17	3.2
16Feb2023 - 10:37:08	15.18	3.22
16Feb2023 - 10:38:08	15.18	3.19
16Feb2023 - 10:39:08	15.17	3.22
16Feb2023 - 10:40:08	15.17	3.22
16Feb2023 - 10:41:08	15.18	3.22
16Feb2023 - 10:42:08	15.18	3.21
16Feb2023 - 10:43:08	15.17	3.2
16Feb2023 - 10:44:08	15.17	3.21
16Feb2023 - 10:45:08	15.18	3.23
16Feb2023 - 10:46:08	15.17	3.21
16Feb2023 - 10:47:08	15.17	3.21
16Feb2023 - 10:48:08	15.18	3.22
16Feb2023 - 10:49:08	15.17	3.22
16Feb2023 - 10:50:08	15.18	3.22
16Feb2023 - 10:51:08	15.18	3.21
16Feb2023 - 10:52:08	15.18	3.22
16Feb2023 - 10:53:08	15.18	3.21
16Feb2023 - 10:54:08	15.17	3.21
16Feb2023 - 10:55:08	15.18	3.22
16Feb2023 - 10:56:08	15.17	3.21
16Feb2023 - 10:57:08	15.17	3.23
16Feb2023 - 10:58:08	15.17	3.2
16Feb2023 - 10:59:08	15.17	3.2
16Feb2023 - 11:00:08	15.17	3.2
16Feb2023 - 11:01:08	15.17	3.21
16Feb2023 - 11:02:08	15.17	3.22
16Feb2023 - 11:03:08	15.17	3.22
16Feb2023 - 11:04:08	15.17	3.2
16Feb2023 - 11:05:08	15.17	3.21
16Feb2023 - 11:06:08	15.17	3.22
16Feb2023 - 11:07:08	15.16	3.2
16Feb2023 - 11:08:08	15.17	3.2
16Feb2023 - 11:09:08	15.17	3.22
16Feb2023 - 11:10:08	15.17	3.21
16Feb2023 - 11:11:08	15.17	3.21
16Feb2023 - 11:12:08	15.17	3.22
16Feb2023 - 11:13:08	15.16	3.2
16Feb2023 - 11:14:08	15.17	3.21
16Feb2023 - 11:15:08	15.17	3.22
16Feb2023 - 11:16:08	15.17	3.21
16Feb2023 - 11:17:08	15.17	3.19
16Feb2023 - 11:18:08	15.17	3.21
16Feb2023 - 11:19:08	15.17	3.2
16Feb2023 - 11:20:08	15.17	3.2
16Feb2023 - 11:21:08	15.17	3.2
16Feb2023 - 11:22:08	15.18	3.22
16Feb2023 - 11:23:08	15.17	3.19
16Feb2023 - 11:24:08	15.17	3.22
16Feb2023 - 11:25:08	15.17	3.21
16Feb2023 - 11:26:08	15.17	3.22
16Feb2023 - 11:27:08	15.17	3.21
16Feb2023 - 11:28:08	15.17	3.22
16Feb2023 - 11:29:08	15.18	3.22
16Feb2023 - 11:30:08	15.18	3.2
16Feb2023 - 11:31:08	15.18	3.22
16Feb2023 - 11:32:08	15.17	3.2
16Feb2023 - 11:33:08	15.17	3.19

Log Averages	O2 (%)	CO2 (%)
	Stack	Stack
16Feb2023 - 11:34:08	15.18	3.22
16Feb2023 - 11:35:08	15.17	3.22
16Feb2023 - 11:35:33	15.18	3.22
Average	15.17	3.22

Log Averages	O2 (%)	CO2 (%)	NOx (ppm)	
	Stack	Stack	Stack	
15Feb2023 - 07:42:07	15.2	3.22	6.16	Point 1
15Feb2023 - 07:43:07	15.19	3.21	6.11	
15Feb2023 - 07:44:07	15.19	3.21	6.03	
15Feb2023 - 07:45:07	15.18	3.22	5.98	Point 2
15Feb2023 - 07:46:07	15.18	3.21	5.96	
15Feb2023 - 07:47:07	15.18	3.2	6.03	
15Feb2023 - 07:48:07	15.18	3.21	6.04	Point 3
15Feb2023 - 07:48:53	15.18	3.19	5.98	

Log Averages	O2 (%)	CO2 (%)	NOx (ppm)
	Stack	Stack	Stack
15Feb2023 - 11:25:50	21.03	-0.01	8.75

Sampling Data

Project			Source		Method	Run
Id	Client	Facility	Id	Location		
	Enbridge	Weymouth MA	Turbine	Duct	M5/202	1

Date	Operator(s)	Ambient Temp (°F)	H_2O (%)	O_2 (%)	CO_2 (%)	Barometric Pressure (in Hg)	Sample Train Leak Checks				K Factor
							in Hg	cfm	in Hg	cfm	
2/15/23	EG, AC	33				29.61	10"	0.001	6"	0.001	14

Stack		Nozzle		Pitot Tube			Probe			Filter		Dry Gas Meter		
Pressure (in H_2O)	Diameter (in)	Id	Diameter (in)	Leak Check	Id	Cp	Id	Liner Material	Length (ft)	Id	Type	Id	ΔH @	Y
+1.6		WE4-1	.435	✓	10-1	0.84	10-1	Glass	10'		PM	2170	2.048	0.983

Traverse Point	Time Clock (24h)	Time Elapsed (min)	DGM Volume (ft^3)	Pitot ΔP (in H_2O)	Orifice ΔH (in H_2O)	Temperature (°F) Stack	Probe	Filter	Impinger	Aux (cpn Filter)	DGM In	DGM Out	Vacuum (in Hg)
A 1	7:45	0	729.714	0.10	1.4	933	249	255	57	68	44	42	3
2		10	735.9	0.15	2.1	933	251	256	58	69	49	44	4
3		20	743.3	0.12	1.7	933	251	256	60	70	52	44	4
4		30	750.9	0.10	1.4	933	251	255	61	70	52	46	4
5		40	757.6	0.09	1.3	933	250	255	61	71	53	45	4
B 1		50	764.156	0.12	1.7	934	250	255	62	72	52	46	4
2		60	771.2	0.19	2.7	938	250	255	61	76	49	47	4
3		70	780.4	0.15	2.1	939	250	255	62	81	54	48	4
4		80	787.6	0.16	2.2	939	251	255	62	80	55	48	4
5		90	796.1	0.10	1.4	938	250	255	63	80	56	51	4
C 1		100	802.805	0.20	2.8	940	250	255	61	81	53	52	4
2		110	810.6	0.23	3.2	941	250	255	60	80	56	51	4
3		120	820.3	0.20	2.8	945	251	255	56	81	58	51	5
4		130	830.1	0.19	2.7	942	251	255	60	82	59	51	5
5		140	839.2	0.23	3.2	942	251	255	59	81	62	53	5
D 1		150	847.919	0.16	2.2	943	251	255	61	80	58	53	4
2		160	856.5	0.18	2.5	948	250	255	59	80	60	55	4
3		170	865.2	0.20	2.8	951	251	255	59	79	61	55	4
4		180	873.2	0.23	3.2	949	250	255	60	79	62	55	4
5		190	883.3	0.22	3.1	950	251	255	60	78	66	56	5
E 1		200	892.713	0.20	2.8	949	251	255	60	78	61	56	5
2		210	901.8	0.22	3.1	948	251	255	61	79	63	56	5
3		220	911.4	0.15	2.1	948	251	255	61	78	63	56	4
4		230	919.8	0.12	1.7	948	251	255	61	79	65	58	4
5		240	926.8	0.10	1.4	948	251	255	59	81	62	57	4
END	12:15	250	933.257										

Notes:

	I	F	
Knockout	486	589	= 103
#2	663	742	= 79
#3-4	1670	1780	= 110

292

Sampling Data

Project			Source		Method	Run
Id	Client	Facility	Id	Location		
	Enbridge	Weymouth, MA	Turbine	Duct	M5/202	2

Date	Operator(s)	Ambient Temp (°F)	H_2O (%)	O_2 (%)	CO_2 (%)	Barometric Pressure (in Hg)	Sample Train Leak Checks				K Factor
							in Hg	cfm	in Hg	cfm	
2/15/23	EG, AC	51				30.05	10"	0.000	6"	0.000	14

Stack		Nozzle		Pitot Tube			Probe			Filter		Dry Gas Meter		
Pressure (in H_2O)	Diameter (in)	Id	Diameter (in)	Leak Check	Id	Cp	Id	Liner Material	Length (ft)	Id	Type	Id	ΔH @	Y
+1.6		WEY-1	.435	✓	10-1	0.84	10-1	Glass	10'		PM	2170	2048	0.983

Traverse Point	Time Clock (24h)	Time Elapsed (min)	DGM Volume (ft³)	Pitot ΔP (in H_2O)	Orifice ΔH (in H_2O)	Temperature (°F) Stack	Probe	Filter	Impinger	cfm filter Aux	DGM In	DGM Out	Vacuum (in Hg)
A 1	1245	0	933.524	0.10	1.4	949	251	255	56	75	57	57	4
2		10	940.1	0.10	1.4	950	249	255	57	76	59	57	4
3		20	946.1	0.09	1.3	951	250	256	58	77	64	58	4
4		30	952.6	0.12	1.7	951	251	256	59	78	64	59	4
5		40	959.3	0.09	1.3	952	252	256	60	78	66	60	4
B 1		50	966.231	0.12	1.7	952	251	255	61	79	64	60	4
2		60	973.9	0.15	2.1	952	251	255	60	78	65	63	4
3		70	981.3	0.15	2.1	952	250	254	59	77	68	61	4
4		80	989.4	0.16	2.2	952	250	254	59	75	67	61	4
5		90	997.4	0.12	1.7	953	250	255	61	76	69	62	4
C 1		100	1004.838	0.15	2.1	952	248	254	61	74	63	62	4
2		110	1013.0	0.23	3.2	953	249	254	60	75	66	61	5
3		120	1022.1	0.25	3.5	955	250	255	60	76	70	62	5
4		130	1032.4	0.22	3.1	954	251	256	61	77	69	62	5
5		140	1042.7	0.20	2.8	954	251	256	59	78	69	64	5
D 1		150	1051.638	0.16	2.2	954	251	255	60	77	67	62	5
2		160	1060.1	0.15	2.1	954	251	255	61	77	67	63	4
3		170	1068.1	0.18	2.5	955	251	255	62	78	68	63	4
4		180	1077.3	0.22	3.1	956	251	255	62	79	70	64	4
5		190	1086.2	0.18	2.5	956	251	255	63	79	69	62	4
E 1		200	1094.847	0.19	2.7	955	251	255	60	78	71	64	4
2		210	1104.1	0.18	2.5	955	251	255	59	77	70	64	4
3		220	1113.3	0.15	2.1	954	251	255	57	78	69	62	4
4		230	1121.7	0.12	1.7	955	251	255	58	79	69	62	4
5		240	1129.2	0.10	1.4	955	251	255	59	80	70	62	4
END	1705	250	1135.425										

Notes:

Knockout - 504 619

#2 - 666 736 292

#3-4 - 1690 1797

Sampling Data

Project			Source		Method	Run
Id	Client	Facility	Id	Location		
	Enbridge	Weymouth, MA	Turbine	Duct	MS/202	3

Date	Operator(s)	Ambient Temp (°F)	H_2O (%)	O_2 (%)	CO_2 (%)	Barometric Pressure (in Hg)	Sample Train Leak Checks				K Factor
							in Hg	cfm	in Hg	cfm	
2/16/23	EG, AC	48				29.96	10"	0.000	7"	0.000	14

Stack		Nozzle		Pitot Tube			Probe			Filter		Dry Gas Meter		
Pressure (in H_2O)	Diameter (in)	Id	Diameter (in)	Leak Check	Id	Cp	Id	Liner Material	Length (ft)	Id	Type	Id	ΔH @	Y
+1.6		WEY-1	.435	✓	10-1	0.84	10-1	Glass	10'		PM	2170	2.048	0.983

Traverse Point	Time		DGM Volume (m^3)	Pitot ΔP (in H_2O)	Orifice ΔH (in H_2O)	Temperature (°F)							Vacuum (in Hg)
	Clock (24h)	Elapsed (min)				Stack	Probe	Filter	Impinger	Aux	DGM In	DGM Out	
A 1	7:15	0	138.336	0.10	1.4	954	250	255	58	72	59	59	4
2		10	145.1	0.12	1.7	953	250	255	57	73	61	59	4
3		20	151.3	0.15	2.1	954	251	255	57	74	66	59	4
4		30	159.7	0.12	2.1	954	251	255	58	75	66	59	4
5		40	168.0	0.12	1.7	955	251	255	59	77	69	62	4
B 1		50	174.432	0.17	2.4	956	251	255	60	73	70	62	5
2		60	183.6	0.19	2.7	955	251	255	61	74	71	63	5
3		70	192.3	0.20	2.8	956	251	255	60	74	74	64	5
4		80	202.1	0.19	2.7	955	251	255	60	73	74	65	5
5		90	212.0	0.17	2.4	955	251	255	61	74	75	66	5
C 1		100	219.582	0.24	3.4	956	251	255	61	75	74	67	6
2		110	230.3	0.22	3.1	957	251	255	61	76	75	69	6
3		120	239.9	0.24	3.4	958	251	255	61	77	78	68	6
4		130	249.3	0.24	3.4	958	251	255	62	74	76	67	6
5		140	259.3	0.20	2.8	959	251	255	58	77	76	67	6
D 1		150	269.248	0.19	2.7	959	251	255	58	78	74	67	5
2		160	277.7	0.22	3.1	960	251	255	59	78	74	67	5
3		170	286.8	0.20	2.8	957	251	255	60	77	71	65	5
4		180	296.7	0.23	3.2	957	251	255	61	77	71	65	5
5		190	305.7	0.20	2.8	957	251	255	60	76	70	66	5
E 1		200	315.112	0.15	2.1	956	251	255	61	78	66	65	5
2		210	322.1	0.17	2.4	956	251	255	61	78	67	65	5
3		220	332.1	0.17	2.4	956	251	255	60	77	68	64	5
4		230	340.3	0.12	1.7	957	251	255	61	76	71	65	5
5		240	347.6	0.10	1.4	957	251	255	62	77	68	64	4
END	11:35	250	354.753										

Notes:
Knockout - 488 599
#2 - 664 736
#3-4 - 1682 1788
289

Appendix B

Process Data

Enbridge Turbine Operational Data Sheet

AGT Unit Run # 1

Test Run No.	225 min	240 min		End Run 1	
Time:	1130	1145	1200	1215	
Date:	2/15/23	2/15/23	2/15/23	2/15/23	
Engine/Compressor Operation					
Power Turbine Speed (NPT %)	96.0	95.7	95.3	94.8	
Gas Producer Speed (NGP %)	99.7	99.6	99.6	99.6	
Gas Compressor Suction Press. (psig)	505	511	518	524	
Gas Compressor Discharge Press. (psig)	1130	1132	1132	1132	
Gas Compressor Suction Temp (°F)	46	46	46	46	
Gas Compressor Discharge Temp (°F)	109	107	111	112	
Gas Compressor Flow (MMSCF/Day)	121.7	124.5	123.5	130.2	
Power Turbine Inlet Temperature (T1)	52	51	52	53	
Power Turbine Outlet Temperature (T5)	1398	1399	1399	1398	
Power Turbine Discharge Pressure, PCD (PSIG)	157	157	157	157	
Fuel Flow (Mscf/hr)	64.9	64.9	64.7	64.6	
Oxidation Catalyst Inlet Temp (°F)	966	966	966	967	
Oxidation Catalyst Pressure Drop ("H2O)	3.4	3.4	3.4	3.4	
Ambient Conditions					
Atmospheric Pressure ("Hg)					
% RH					
Ambient Temp	51	51	52	54	

AGT Unit Run #

Test Run No.	150 min	165 min	180 min	195 min	210 min
Time:	1015	1030	1045	1100	1115
Date: 2/15/23	2/15/23				
Engine/Compressor Operation					
Power Turbine Speed (NPT %)	97.9	97.4	97.0	99.8	99.8
Gas Producer Speed (NGP %)	100.0	99.9	99.8	96.7	96.5
Gas Compressor Suction Press. (psig)	480	486	493	497	499
Gas Compressor Discharge Press. (psig)	1130	1131	1131	1131	1131
Gas Compressor Suction Temp (°F)	45	45	45	45	45
Gas Compressor Discharge Temp (°F)	106	107	108	108	108
Gas Compressor Flow (MMSCF/Day)	116.1	119.7	124.4	121.1	124.4
Power Turbine Inlet Temperature (T1)	47	48	48	50	51
Power Turbine Outlet Temperature (T5)	1397	1399	1400	1400	1400
Power Turbine Discharge Pressure, PCD (PSIG)	157	157	157	157	157
Fuel Flow (Mscf/hr)	65.9	65.6	65.5	65.5	65.2
Oxidation Catalyst Inlet Temp (°F)	961	963	963	965	963
Oxidation Catalyst Pressure Drop ("H2O)	3.4	3.4	3.4	3.4	3.4
Ambient Conditions					
Atmospheric Pressure ("Hg)					
% RH					
Ambient Temp	47	48	48		50

Enbridge Turbine Operational Data Sheet

AGT Unit Run #

Test Run No.	75 min	90 min	105 min	120 min	135 min
Time:	9:00	915	930	945	1000
Date: 12 2/15/23					
Engine/Compressor Operation					
Power Turbine Speed (NPT %)	98.5	98.5	98.4	98.3	98.1
Gas Producer Speed (NGP %)	100	100	100	100.0	100.0
Gas Compressor Suction Press. (psig)	470	470	470	472	475
Gas Compressor Discharge Press. (psig)	1130	1130	1130	1130	1131
Gas Compressor Suction Temp (°F)	45	45	45	45	45
Gas Compressor Discharge Temp (°F)	104	105	104	105	105
Gas Compressor Flow (MMSCF/Day)	115.6	115.6	113.9	119.1	114.7
Power Turbine Inlet Temperature (T1)	43	44	45	45	46
Power Turbine Outlet Temperature (T5)	1390	1392	1393	1394	1395
Power Turbine Discharge Pressure, PCD (PSIG)	157	157	157	157	157
Fuel Flow (Mscf/hr)	66.2	66.1	66.1	66.0	65.9
Oxidation Catalyst Inlet Temp (°F)	955	951	955	956	959
Oxidation Catalyst Pressure Drop ("H2O)	3.4	3.4	3.4	3.4	3.4
Ambient Conditions					
Atmospheric Pressure ("Hg)			30.17		
% RH			75		
Ambient Temp	42°F	42°	44°	45°	46°

AGT Unit Run # 1

Test Run No.	Start	15 min	30 min	45 min	60 min
Time:	745	800	815	830	845
Date:	2/15/23				
Engine/Compressor Operation					
Power Turbine Speed (NPT %)	98.2	98.0	98.4	98.4	98.4
Gas Producer Speed (NGP %)	100	100.0	100.0	100.0	100
Gas Compressor Suction Press. (psig)	480	477	476	475	472
Gas Compressor Discharge Press. (psig)	1131	1131	1131	1131	1130
Gas Compressor Suction Temp (°F)	44	44	44	45	44
Gas Compressor Discharge Temp (°F)	100°F	100	100	101	104
Gas Compressor Flow (MMSCF/Day)	~~66.1~~ 118.2	120.9	120.0	119	114.8
Power Turbine Inlet Temperature (T1)	40	40	40	40	40
Power Turbine Outlet Temperature (T5)	1385	1386	1387	1386	1390
Power Turbine Discharge Pressure, PCD (PSIG)	157	157	157	157	157
Fuel Flow (Mscf/hr) 66.1	~~66.5~~ ~~118.2~~	66.5	66.5	66.4	66.2
Oxidation Catalyst Inlet Temp (°F)	948	949	946	949	949
Oxidation Catalyst Pressure Drop ("H2O)	3.4	3.4	3.4	3.4	3.4
Ambient Conditions					
Atmospheric Pressure ("Hg)	30.20				
% RH	75%				
Ambient Temp	39°F				

TEST # 2

AGT Unit Run # 2

Test Run No.	Start	15 min	30 min	45 min	60 min
Time:					
Date: 12/15/23	1245	1300	1315	1330	1345
Engine/Compressor Operation					
Power Turbine Speed (NPT %)	93.6	92.7	92.1	91.5	90.9
Gas Producer Speed (NGP %)	99.4	99.3	99.3	99.3	99.2
Gas Compressor Suction Press. (psig)	543	558	570	582	593
Gas Compressor Discharge Press. (psig)	1132	1133	1134	1137	1143
Gas Compressor Suction Temp (°F)	46	46	46	46	47
Gas Compressor Discharge Temp (°F)	112	110	111	109	111
Gas Compressor Flow (MMSCF/Day)	132.3	128.2	133.7	136.1	138.9
Power Turbine Inlet Temperature (T1)	55	56	57	57	58
Power Turbine Outlet Temperature (T5)	1398	1400	1399	1399	1399
Power Turbine Discharge Pressure, PCD (PSIG)	157	157	157	157	157
Fuel Flow (Mscf/hr)	64.0	63.7	63.5	63.4	63.3
Oxidation Catalyst Inlet Temp (°F)	969	970	970	970	971
Oxidation Catalyst Pressure Drop ("H2O)	3.4	3.4	3.4	3.4	3.4
Ambient Conditions					
Atmospheric Pressure ("Hg)					
% RH					
Ambient Temp	56	~~45~~ 56	58	57	60

Enbridge Turbine Operational Data Sheet

AGT Unit Run # 2

Test Run No.	75 min	90 min	105 min	120 min	135 min
Time:	1480	1415	1430	1445	1500
Date: 2/15/23					
Engine/Compressor Operation					
Power Turbine Speed (NPT %)	90.2	90.0	89.6	89.3	89.0
Gas Producer Speed (NGP %)	99.1	99.1	99.1	99.1	99.1
Gas Compressor Suction Press. (psig)	604	610	616	623	628
Gas Compressor Discharge Press. (psig)	1146	1152	1157	1162	1167
Gas Compressor Suction Temp (°F)	47	47	46	46	46
Gas Compressor Discharge Temp (°F)	110	110	109	109	110
Gas Compressor Flow (MMSCF/Day)	140.8	143.1	145.5	148.0	147.8
Power Turbine Inlet Temperature (T1)	58	58	58	59°F	59
Power Turbine Outlet Temperature (T5)	1400	1399	1399	1400	1399
Power Turbine Discharge Pressure, PCD (PSIG)	157	157	157	157	157
Fuel Flow (Mscf/hr)	63.2	63.1	63.0	62.8	62.8
Oxidation Catalyst Inlet Temp (°F)	973	973	973	974	975
Oxidation Catalyst Pressure Drop ("H2O)	3.4	3.4	3.4	3.4	3.4
Ambient Conditions					
Atmospheric Pressure ("Hg)					
% RH					
Ambient Temp	59	58	57.0		60

AGT Unit Run # 2

Test Run No.	150 min	165 min	180 min	195 min	210 min
Time:	1515	1530	1545	1600	1615
Date:	2/15/23				
Engine/Compressor Operation					
Power Turbine Speed (NPT %)	88.9	88.9	88.8	89.0	89.3
Gas Producer Speed (NGP %)	99.1	99.1	99.1	99.1	99.1
Gas Compressor Suction Press. (psig)	632	632	629	622	613
Gas Compressor Discharge Press. (psig)	1173	1177	1180	1182	1186
Gas Compressor Suction Temp (°F)	46	46	46	46	46
Gas Compressor Discharge Temp (°F)	108	107	108	108	108
Gas Compressor Flow (MMSCF/Day)	153.4	150.5	148.0	140.1	141.3
Power Turbine Inlet Temperature (T1)	57	59	59	59	59
Power Turbine Outlet Temperature (T5)	1399	1399	1398	1399	1400
Power Turbine Discharge Pressure, PCD (PSIG)	157	157	157	157	157
Fuel Flow (Mscf/hr)	62.9	62.9	62.8	62.7	62.7
Oxidation Catalyst Inlet Temp (°F)	975	975	975	974	974
Oxidation Catalyst Pressure Drop ("H2O)	3.4	3.4	3.4	3.4	3.4
Ambient Conditions					
Atmospheric Pressure ("Hg)					
% RH					
Ambient Temp	58	57	57	58	57

Enbridge Turbine Operational Data Sheet

AGT Unit Run #

Test Run No. 2	225 min	240 min	255 min	270 min	
Time:	16:30	16:45	17:00	17:05 END	
Date:	2/15/23	2/15/23	2/15/23	2/15/23	
Engine/Compressor Operation					
Power Turbine Speed (NPT %)	89.6	90.0	90.3	90.5	
Gas Producer Speed (NGP %)	99.1	99.2	99.2	99.2	
Gas Compressor Suction Press. (psig)	604	597	588	585	
Gas Compressor Discharge Press. (psig)	1189	1192	1194	1196	
Gas Compressor Suction Temp (°F)	45	45	45	45	
Gas Compressor Discharge Temp (°F)	110	108	108	108	
Gas Compressor Flow (MMSCF/Day)	137.1	139.3	129.4	133.2	
Power Turbine Inlet Temperature (T1)	57	58	58	58	
Power Turbine Outlet Temperature (T5)	1399	1399	1399	1398	
Power Turbine Discharge Pressure, PCD (PSIG)	157	157	157	157	
Fuel Flow (Mscf/hr)	62.6	62.8	62.9	63.1	
Oxidation Catalyst Inlet Temp (°F)	975	973	972	972	
Oxidation Catalyst Pressure Drop ("H2O)	3.4	3.4	3.4	3.4	
Ambient Conditions					
Atmospheric Pressure ("Hg)					
% RH					
Ambient Temp	57	57	56	56	

Enbridge Turbine Operational Data Sheet

AGT Unit Run #

Test Run No.	Start	15 min	30 min	45 min	60 min
Time:	7:15	730	745	8:00	815
Date:					
Engine/Compressor Operation					
Power Turbine Speed (NPT %)	90.4	90.4	90.2	90.1	90.0
Gas Producer Speed (NGP %)	99.4	99.3	99.3	99.2	99.2
Gas Compressor Suction Press. (psig)	593	593	597	597	598
Gas Compressor Discharge Press. (psig)	1283	1281	1280	1279	1278
Gas Compressor Suction Temp (°F)	45	46	46	46	46
Gas Compressor Discharge Temp (°F)	107	108	108	108	109
Gas Compressor Flow (MMSCF/Day)	130.5	129.3	132.1	129	128.9
Power Turbine Inlet Temperature (T1)	55	56	56	57	57
Power Turbine Outlet Temperature (T5)	1399	1358	1398	1399	1400
Power Turbine Discharge Pressure, PCD (PSIG)	153	157	157	157	157
Fuel Flow (Mscf/hr)	63.4	63.7	63.6	63.5	63.5
Oxidation Catalyst Inlet Temp (°F)	971	971	972	972	973
Oxidation Catalyst Pressure Drop ("H2O)	3.4	3.4	3.4	3.4	3.4
Ambient Conditions					
Atmospheric Pressure ("Hg)					
% RH					
Ambient Temp	53	53	54	55	55

Enbridge Turbine Operational Data Sheet

AGT Unit Run #

Test Run No.	75 min	90 min	105 min	120 min	135 min
Time:	830	845	900	915	930
Date:					
Engine/Compressor Operation					
Power Turbine Speed (NPT %)	90.0	89.5	~~99.1~~ 89.5	89.2	89.0
Gas Producer Speed (NGP %)	99.2	99.1	99.1	99.0	99.0
Gas Compressor Suction Press. (psig)	600	606	606	607	614
Gas Compressor Discharge Press. (psig)	1279	1278	1278	1279	1277
Gas Compressor Suction Temp (°F)	46	46	46	46	46
Gas Compressor Discharge Temp (°F)	109	109	109	109	110
Gas Compressor Flow (MMSCF/Day)	125.8	128.8	130.7	128.7	134.2
Power Turbine Inlet Temperature (T1)	58	59	59	60	60
Power Turbine Outlet Temperature (T5)	1399	1400	1399	1398	1398
Power Turbine Discharge Pressure, PCD (PSIG)	157	157	157	157	157
Fuel Flow (Mscf/hr)	63.2	63.1	63.0	62.8	62.6
Oxidation Catalyst Inlet Temp (°F)	973	974	973	974	975
Oxidation Catalyst Pressure Drop ("H2O)	3.4	3.4	3.4	3.4	3.4
Ambient Conditions					
Atmospheric Pressure ("Hg)					
% RH					
Ambient Temp	58	58	58	60	60

Enbridge Turbine Operational Data Sheet

AGT Unit Run #

Test Run No.	150 min	165 min	180 min	195 min	210 min
Time:	945	1000	1015	1030	1045
Date:					
Engine/Compressor Operation					
Power Turbine Speed (NPT %)	88.7	88.6	88.3	88.2	88.1
Gas Producer Speed (NGP %)	99.0	99.0	98.9	98.9	98.9
Gas Compressor Suction Press. (psig)	619	623	627	628	631
Gas Compressor Discharge Press. (psig)	1278	1278	1278	1279	1280
Gas Compressor Suction Temp (°F)	46	46	46	46	46
Gas Compressor Discharge Temp (°F)	110	110	111	111	111
Gas Compressor Flow (MMSCF/Day)	136	136.2	139.1	137.4	137.3
Power Turbine Inlet Temperature (T1)	61	61	61	62	62
Power Turbine Outlet Temperature (T5)	1398	1396	1400	1400	1396
Power Turbine Discharge Pressure, PCD (PSIG)	157	157	157	157	157
Fuel Flow (Mscf/hr)	62.6	62.7	62.5	62.4	62.4
Oxidation Catalyst Inlet Temp (°F)	976	976	976	978	977
Oxidation Catalyst Pressure Drop ("H2O)	3.3	3.4	3.4	3.4	3.4
Ambient Conditions					
Atmospheric Pressure ("Hg)					
% RH					
Ambient Temp	61	61	62	62	62

Enbridge Turbine Operational Data Sheet

AGT Unit Run #

Test Run No.	225 min	240 min			
Time:	1100	1115	1130	1135	
Date:					
Engine/Compressor Operation					
Power Turbine Speed (NPT %)	87.9	87.9	87.8	87.7	
Gas Producer Speed (NGP %)	98.8	98.9	98.8	98.8	
Gas Compressor Suction Press. (psig)	633	634	636	636	
Gas Compressor Discharge Press. (psig)	1281	1282	1282	1282	
Gas Compressor Suction Temp (°F)	46	46	46	46	
Gas Compressor Discharge Temp (°F)	111	111	110	110	
Gas Compressor Flow (MMSCF/Day)	137	133.5	135.6	139.5	
Power Turbine Inlet Temperature (T1)	~~1334~~ 62	62	62	62	
Power Turbine Outlet Temperature (T5)	1399	1396	1398	1398	
Power Turbine Discharge Pressure, PCD (PSIG)	157	157	157	157	
Fuel Flow (Mscf/hr)	624	62.5	62.8	62.7	
Oxidation Catalyst Inlet Temp (°F)	978	978	978	978	
Oxidation Catalyst Pressure Drop ("H2O)	3.4	3.4	3.3	3.4	
Ambient Conditions					
Atmospheric Pressure ("Hg)					
% RH					
Ambient Temp	62	63	63	63	

Appendix C

Laboratory Data

Your Project #: ENBR2023-6
Site Location: ENBRIDGE

Attention: Jim Canora

Canomara, LLC
6 Herman Drive
Suite E
East Granby, CT
USA 06026

Report Date: 2023/03/09
Report #: R7540359
Version: 1 - Final

CERTIFICATE OF ANALYSIS

BUREAU VERITAS JOB #: C353741
Received: 2023/02/23, 19:30

Sample Matrix: Stack Sampling Train
Samples Received: 9

Analyses	Quantity	Date Extracted	Date Analyzed	Laboratory Method	Analytical Method
Extractable Condensables (M202)	5	2023/03/01	2023/03/06	BRL SOP-00118	EPA 202 m
Non Extractable Condensibles (M202)	5	2023/03/01	2023/03/06	BRL SOP-00118 / BRL SOP-00109	EPA 202 m
Particulates/Acetone Rinse (M5/315/M201)	4	2023/03/09	2023/03/07	BRL SOP-00109	EPA 5/315 m
Particulates/Filter (M5/315/NJATM1/M201)	4	N/A	2023/03/01	BRL SOP-00109	EPA 5/315/NJATM1 m
Final Volume of Acetone Probe Rinse	4	N/A	2023/03/02	BRL SOP-00109	
Weight of Solvent from Impingers	5	N/A	2023/03/01		
Weight of Water from Impingers	5	N/A	2023/03/01		

Remarks:

Bureau Veritas is accredited to ISO/IEC 17025 for specific parameters on scopes of accreditation. Unless otherwise noted, procedures used by Bureau Veritas are based upon recognized Provincial, Federal or US method compendia such as CCME, MELCC, EPA, APHA.

All work recorded herein has been done in accordance with procedures and practices ordinarily exercised by professionals in Bureau Veritas' profession using accepted testing methodologies, quality assurance and quality control procedures (except where otherwise agreed by the client and Bureau Veritas in writing). All data is in statistical control and has met quality control and method performance criteria unless otherwise noted. All method blanks are reported; unless indicated otherwise, associated sample data are not blank corrected. Where applicable, unless otherwise noted, Measurement Uncertainty has not been accounted for when stating conformity to the referenced standard.

Bureau Veritas liability is limited to the actual cost of the requested analyses, unless otherwise agreed in writing. There is no other warranty expressed or implied. Bureau Veritas has been retained to provide analysis of samples provided by the Client using the testing methodology referenced in this report. Interpretation and use of test results are the sole responsibility of the Client and are not within the scope of services provided by Bureau Veritas, unless otherwise agreed in writing. Bureau Veritas is not responsible for the accuracy or any data impacts, that result from the information provided by the customer or their agent.

Solid sample results, except biota, are based on dry weight unless otherwise indicated. Organic analyses are not recovery corrected except for isotope dilution methods.
Results relate to samples tested. When sampling is not conducted by Bureau Veritas, results relate to the supplied samples tested.
This Certificate shall not be reproduced except in full, without the written approval of the laboratory.
Reference Method suffix “m” indicates test methods incorporate validated modifications from specific reference methods to improve performance.
* RPDs calculated using raw data. The rounding of final results may result in the apparent difference.

Bureau Veritas 6740 Campobello Road, Mississauga, Ontario, L5N 2L8 Tel: (905) 817-5700 Toll-Free: 800-563-6266 Fax: (905) 817-5777 www.bvna.com

Microbiology testing is conducted at 6660 Campobello Rd. Chemistry testing is conducted at 6740 Campobello Rd.

Your Project #: ENBR2023-6
Site Location: ENBRIDGE

Attention: Jim Canora

Canomara, LLC
6 Herman Drive
Suite E
East Granby, CT
USA 06026

Report Date: 2023/03/09
Report #: R7540359
Version: 1 - Final

CERTIFICATE OF ANALYSIS

BUREAU VERITAS JOB #: C353741
Received: 2023/02/23, 19:30

Encryption Key

AUTHORIZED REPORT
RAPPORT AUTORISÉ

Bureau Veritas
09 Mar 2023 17:43:14

Please direct all questions regarding this Certificate of Analysis to:
Marinela Sim, Project Manager
Email: Marinela.Sim@bureauveritas.com
Phone# (905)817-5828
==========
This report has been generated and distributed using a secure automated process.
Bureau Veritas has procedures in place to guard against improper use of the electronic signature and have the required "signatories", as per ISO/IEC 17025, signing the reports. For Service Group specific validation, please refer to the Validation Signatures page if included, otherwise available by request. For Department specific Analyst/Supervisor validation names, please refer to the Test Summary section if included, otherwise available by request. This report is authorized by Rodney Major, General Manager responsible for Ontario Environmental laboratory operations.

Bureau Veritas 6740 Campobello Road, Mississauga, Ontario, L5N 2L8 Tel: (905) 817-5700 Toll-Free: 800-563-6266 Fax: (905) 817-5777 www.bvna.com

Microbiology testing is conducted at 6660 Campobello Rd. Chemistry testing is conducted at 6740 Campobello Rd.

Bureau Veritas Job #: C353741
Report Date: 2023/03/09

Canomara, LLC
Client Project #: ENBR2023-6
Site Location: ENBRIDGE

EPA M202 CONDENSIBLE PM (STACK SAMPLING TRAIN)

Bureau Veritas ID		VDG782	VDG783	VDH231	VDH232	VDH233		
Sampling Date		2023/02/15	2023/02/15	2023/02/15	2023/02/15	2023/02/16		
	UNITS	**M202- RECOVERY BLNK**	**M202- PROOF BLNK**	**M202- 1**	**M202- 2**	**M202- 3**	**RDL**	**QC Batch**
Weight	g	68	72	250	250	230	0.1	8528266
Weight of Solvent	g	53	34	47	54	67	0.1	8528258
Miscellaneous Parameters								
Inorganic Condensibles	mg	1.0	0.7	1.2	1.5	0.9	0.5	8528270
Organic Condensibles	mg	<1.0	<1.0	1.2	1.3	<1.0	1.0	8528246

RDL = Reportable Detection Limit
QC Batch = Quality Control Batch

Bureau Veritas 6740 Campobello Road, Mississauga, Ontario, L5N 2L8 Tel: (905) 817-5700 Toll-Free: 800-563-6266 Fax: (905) 817-5777 www.bvna.com

Microbiology testing is conducted at 6660 Campobello Rd. Chemistry testing is conducted at 6740 Campobello Rd.

Bureau Veritas Job #: C353741
Report Date: 2023/03/09

Canomara, LLC
Client Project #: ENBR2023-6
Site Location: ENBRIDGE

EPA M5 PARTICULATE MATTER (PM)

Bureau Veritas ID		VDG772	VDG773	VDG774	VDG775		
Sampling Date		2023/02/15	2023/02/15	2023/02/15	2023/02/16		
	UNITS	**M5 BLNK**	**M5- 1**	**M5- 2**	**M5- 3**	**RDL**	**QC Batch**
Acetone Rinse Particulate Weight in Acetone Rins	mg	0.8	0.5	<0.5	<0.5	0.5	8543493
Front Half Particulate Weight on Filter	mg	<0.30	<0.30	<0.30	<0.30	0.30	8543492
Acetone Rinse Volume	ml	56	45	38	50	1	8543497

RDL = Reportable Detection Limit
QC Batch = Quality Control Batch

Bureau Veritas 6740 Campobello Road, Mississauga, Ontario, L5N 2L8 Tel: (905) 817-5700 Toll-Free: 800-563-6266 Fax: (905) 817-5777 www.bvna.com

Microbiology testing is conducted at 6660 Campobello Rd. Chemistry testing is conducted at 6740 Campobello Rd.

Bureau Veritas Job #: C353741
Report Date: 2023/03/09

Canomara, LLC
Client Project #: ENBR2023-6
Site Location: ENBRIDGE

TEST SUMMARY

Bureau Veritas ID: VDG772
Sample ID: M5 BLNK
Matrix: Stack Sampling Train

Collected: 2023/02/15
Shipped:
Received: 2023/02/23

Test Description	Instrumentation	Batch	Extracted	Date Analyzed	Analyst
Particulates/Acetone Rinse (M5/315/M201)	BAL	8543493	2023/03/09	2023/03/07	Andrea Contreras Arenas
Particulates/Filter (M5/315/NJATM1/M201)	BAL	8543492	N/A	2023/03/01	Andrea Contreras Arenas
Final Volume of Acetone Probe Rinse		8543497	N/A	2023/03/02	Andrea Contreras Arenas

Bureau Veritas ID: VDG773
Sample ID: M5- 1
Matrix: Stack Sampling Train

Collected: 2023/02/15
Shipped:
Received: 2023/02/23

Test Description	Instrumentation	Batch	Extracted	Date Analyzed	Analyst
Particulates/Acetone Rinse (M5/315/M201)	BAL	8543493	2023/03/09	2023/03/07	Andrea Contreras Arenas
Particulates/Filter (M5/315/NJATM1/M201)	BAL	8543492	N/A	2023/03/01	Andrea Contreras Arenas
Final Volume of Acetone Probe Rinse		8543497	N/A	2023/03/02	Andrea Contreras Arenas

Bureau Veritas ID: VDG774
Sample ID: M5- 2
Matrix: Stack Sampling Train

Collected: 2023/02/15
Shipped:
Received: 2023/02/23

Test Description	Instrumentation	Batch	Extracted	Date Analyzed	Analyst
Particulates/Acetone Rinse (M5/315/M201)	BAL	8543493	2023/03/09	2023/03/07	Andrea Contreras Arenas
Particulates/Filter (M5/315/NJATM1/M201)	BAL	8543492	N/A	2023/03/01	Andrea Contreras Arenas
Final Volume of Acetone Probe Rinse		8543497	N/A	2023/03/02	Andrea Contreras Arenas

Bureau Veritas ID: VDG775
Sample ID: M5- 3
Matrix: Stack Sampling Train

Collected: 2023/02/16
Shipped:
Received: 2023/02/23

Test Description	Instrumentation	Batch	Extracted	Date Analyzed	Analyst
Particulates/Acetone Rinse (M5/315/M201)	BAL	8543493	2023/03/09	2023/03/07	Andrea Contreras Arenas
Particulates/Filter (M5/315/NJATM1/M201)	BAL	8543492	N/A	2023/03/01	Andrea Contreras Arenas
Final Volume of Acetone Probe Rinse		8543497	N/A	2023/03/02	Andrea Contreras Arenas

Bureau Veritas ID: VDG782
Sample ID: M202- RECOVERY BLNK
Matrix: Stack Sampling Train

Collected: 2023/02/15
Shipped:
Received: 2023/02/23

Test Description	Instrumentation	Batch	Extracted	Date Analyzed	Analyst
Extractable Condensables (M202)	BAL	8528246	2023/03/01	2023/03/06	Muhammad M Rahman
Non Extractable Condensibles (M202)	BAL	8528270	2023/03/01	2023/03/06	Muhammad M Rahman
Weight of Solvent from Impingers		8528258	N/A	2023/03/01	Muhammad M Rahman
Weight of Water from Impingers		8528266	N/A	2023/03/01	Muhammad M Rahman

Bureau Veritas 6740 Campobello Road, Mississauga, Ontario, L5N 2L8 Tel: (905) 817-5700 Toll-Free: 800-563-6266 Fax: (905) 817-5777 www.bvna.com

Microbiology testing is conducted at 6660 Campobello Rd. Chemistry testing is conducted at 6740 Campobello Rd.

Bureau Veritas Job #: C353741
Report Date: 2023/03/09

Canomara, LLC
Client Project #: ENBR2023-6
Site Location: ENBRIDGE

TEST SUMMARY

Bureau Veritas ID: VDG783
Sample ID: M202- PROOF BLNK
Matrix: Stack Sampling Train

Collected: 2023/02/15
Shipped:
Received: 2023/02/23

Test Description	Instrumentation	Batch	Extracted	Date Analyzed	Analyst
Extractable Condensables (M202)	BAL	8528246	2023/03/01	2023/03/06	Muhammad M Rahman
Non Extractable Condensibles (M202)	BAL	8528270	2023/03/01	2023/03/06	Muhammad M Rahman
Weight of Solvent from Impingers		8528258	N/A	2023/03/01	Muhammad M Rahman
Weight of Water from Impingers		8528266	N/A	2023/03/01	Muhammad M Rahman

Bureau Veritas ID: VDH231
Sample ID: M202- 1
Matrix: Stack Sampling Train

Collected: 2023/02/15
Shipped:
Received: 2023/02/23

Test Description	Instrumentation	Batch	Extracted	Date Analyzed	Analyst
Extractable Condensables (M202)	BAL	8528246	2023/03/01	2023/03/06	Muhammad M Rahman
Non Extractable Condensibles (M202)	BAL	8528270	2023/03/01	2023/03/06	Muhammad M Rahman
Weight of Solvent from Impingers		8528258	N/A	2023/03/01	Muhammad M Rahman
Weight of Water from Impingers		8528266	N/A	2023/03/01	Muhammad M Rahman

Bureau Veritas ID: VDH232
Sample ID: M202- 2
Matrix: Stack Sampling Train

Collected: 2023/02/15
Shipped:
Received: 2023/02/23

Test Description	Instrumentation	Batch	Extracted	Date Analyzed	Analyst
Extractable Condensables (M202)	BAL	8528246	2023/03/01	2023/03/06	Muhammad M Rahman
Non Extractable Condensibles (M202)	BAL	8528270	2023/03/01	2023/03/06	Muhammad M Rahman
Weight of Solvent from Impingers		8528258	N/A	2023/03/01	Muhammad M Rahman
Weight of Water from Impingers		8528266	N/A	2023/03/01	Muhammad M Rahman

Bureau Veritas ID: VDH233
Sample ID: M202- 3
Matrix: Stack Sampling Train

Collected: 2023/02/16
Shipped:
Received: 2023/02/23

Test Description	Instrumentation	Batch	Extracted	Date Analyzed	Analyst
Extractable Condensables (M202)	BAL	8528246	2023/03/01	2023/03/06	Muhammad M Rahman
Non Extractable Condensibles (M202)	BAL	8528270	2023/03/01	2023/03/06	Muhammad M Rahman
Weight of Solvent from Impingers		8528258	N/A	2023/03/01	Muhammad M Rahman
Weight of Water from Impingers		8528266	N/A	2023/03/01	Muhammad M Rahman

Bureau Veritas 6740 Campobello Road, Mississauga, Ontario, L5N 2L8 Tel: (905) 817-5700 Toll-Free: 800-563-6266 Fax: (905) 817-5777 www.bvna.com

Microbiology testing is conducted at 6660 Campobello Rd. Chemistry testing is conducted at 6740 Campobello Rd.

GENERAL COMMENTS

Sample VDG782 [M202- RECOVERY BLNK] : ORGANIC EXTRACTION: Oily material found in vial.
INORGANIC EXTRACTION: Whitish material found in teflon dish.

Sample VDG783 [M202- PROOF BLNK] : ORGANIC EXTRACTION: Oily material found in vial.
INORGANIC EXTRACTION: Whitish material found in teflon dish.

Sample VDH231 [M202- 1] : ORGANIC EXTRACTION: Blackish oily material found in vial.
INORGANIC EXTRACTION: Whitish material found in teflon dish.

Sample VDH232 [M202- 2] : ORGANIC EXTRACTION: Oily material found in vial.
INORGANIC EXTRACTION: Whitish material found in teflon dish.

Sample VDH233 [M202- 3] : ORGANIC EXTRACTION: Oily material found in vial.
INORGANIC EXTRACTION: Whitish material found in teflon dish.

Results relate only to the items tested.

Bureau Veritas 6740 Campobello Road, Mississauga, Ontario, L5N 2L8 Tel: (905) 817-5700 Toll-Free: 800-563-6266 Fax: (905) 817-5777 www.bvna.com

Microbiology testing is conducted at 6660 Campobello Rd. Chemistry testing is conducted at 6740 Campobello Rd.

Bureau Veritas Job #: C353741
Report Date: 2023/03/09

Canomara, LLC
Client Project #: ENBR2023-6
Site Location: ENBRIDGE

QUALITY ASSURANCE REPORT

QA/QC Batch	Init	QC Type	Parameter	Date Analyzed	Value	Recovery	UNITS	QC Limits
8528246	MOR	Spiked Blank	Organic Condensibles	2023/03/06		99	%	70 - 130
8528246	MOR	Method Blank	Organic Condensibles	2023/03/06	<1.0		mg	
8528270	MOR	Spiked Blank	Inorganic Condensibles	2023/03/06		100	%	80 - 120
8528270	MOR	Method Blank	Inorganic Condensibles	2023/03/06	<0.5		mg	
8543493	ANC	Method Blank	Acetone Rinse Particulate Weight in Acetone Ri	2023/03/07	<0.5		mg	

Spiked Blank: A blank matrix sample to which a known amount of the analyte, usually from a second source, has been added. Used to evaluate method accuracy.

Method Blank: A blank matrix containing all reagents used in the analytical procedure. Used to identify laboratory contamination.

Bureau Veritas 6740 Campobello Road, Mississauga, Ontario, L5N 2L8 Tel: (905) 817-5700 Toll-Free: 800-563-6266 Fax: (905) 817-5777 www.bvna.com

Microbiology testing is conducted at 6660 Campobello Rd. Chemistry testing is conducted at 6740 Campobello Rd.

Bureau Veritas Job #: C353741
Report Date: 2023/03/09

Canomara, LLC
Client Project #: ENBR2023-6
Site Location: ENBRIDGE

VALIDATION SIGNATURE PAGE

The analytical data and all QC contained in this report were reviewed and validated by:

Cristina Carriere

Cristina Carriere, Senior Scientific Specialist

Bureau Veritas has procedures in place to guard against improper use of the electronic signature and have the required "signatories", as per ISO/IEC 17025, signing the reports. For Service Group specific validation, please refer to the Validation Signatures page if included, otherwise available by request. For Department specific Analyst/Supervisor validation names, please refer to the Test Summary section if included, otherwise available by request. This report is authorized by {0}, {1} responsible for {2} {3} laboratory operations.

Bureau Veritas 6740 Campobello Road, Mississauga, Ontario, L5N 2L8 Tel: (905) 817-5700 Toll-Free: 800-563-6266 Fax: (905) 817-5777 www.bvna.com

Microbiology testing is conducted at 6660 Campobello Rd. Chemistry testing is conducted at 6740 Campobello Rd.

Appendix D

Example Calculations

Volume of Dry Gas Sampled at Standard Conditions, dscf

$$V_{mstd} = \gamma\, V_m \frac{\left(P_{Br} + \frac{\Delta H}{13.6}\right) T_{std}}{P_{std}\, T_m}$$

= 204.559

γ	=	0.983	T_{std} (°R)	=	528
V_m	=	203.543	P_{std}	=	29.92
P_{Br}	=	29.61	T_m (°R)	=	514.02
ΔH	=	2.304			

Volume of Water Vapor at Standard Conditions, scf

$$V_{wstd} = 0.04706\, V_{lc}$$

= 13.74

V_{lc}	=	292

Percent Moisture, By Volume, as measured in Flue Gas, %

$$\%\, H_2O = 100 \text{ x } \frac{V_{wstd}}{V_{wstd} + V_{mstd}}$$

= 6.29

V_{wstd}	=	13.74
V_{mstd}	=	204.559

Absolute Flue Gas Pressure, Inches of Mercury

$$P_s = P_{Br} + \frac{P_g}{13.6}$$

= 29.73

P_{Br}	=	29.61
P_g	=	1.60

Percent Moisture Saturation at Flue Gas Conditions, %

$$\%\, H_2O_{sat} = 10^{\left(6.6911 - \frac{3144}{T_s + 390.86}\right)} \frac{100}{P_s}$$

= 100.00

T_s	=	942.40
P_s	=	29.73

Dry Mole Fraction of Flue Gas

$$M_{fd} = 1 - B_{ws}$$

= 0.937

B_{ws}	=	0.0629

Dry Molecular Weight of Flue Gas, lb/lb-mole

$$M_d = (0.44\,\%CO_2) + (0.32\,\%O_2) + [0.28\,(\%N_2 + \%CO)]$$

= 29.12

% CO_2	=	3.20
% O_2	=	15.24
%N_2 + %CO	=	81.56

Wet Molecular Weight of the Flue Gas, lb/lb-mole

$$M_s = M_d\,M_{fd} + (18\,B_{ws})$$

= 28.42

M_d	=	29.12
M_{fd}	=	0.937
B_{ws}	=	0.0629

Average Flue Gas Velocity, ft/sec

$$v_s = 85.49\,C_p\,avg\sqrt{\Delta P}\sqrt{\frac{T_s}{P_s\,M_s}}$$

= 37.11

C_p	=	0.84
avg√ΔP	=	0.40
T_s (°R)	=	1402.40
P_s	=	29.73
M_s	=	28.42

Dry Volumetric Flue Gas Flow Rate at Standard Conditions, dscfm

$$Q_{sd} = \frac{60\,M_{fd}\,t_{std}\,P_s\,v_s\,A_s}{T_s\,P_{std}}$$

= 49,951

M_{fd}	=	0.94
t_{std} (°R)	=	528
P_s	=	29.73
v_s	=	37.11

A_s	=	64.00
T_s (°R)	=	1402.40
P_{std}	=	29.92

Actual Wet Volumetric Flue Gas Flow Rate at Actual Conditions, acfm

$$Q_{aw} = 60\,v_s\,A_s$$

= 142,502

v_s	=	37.11
A_s	=	64.00

Percent Excess Air

$$\% EA = 100 \frac{\%O_2 - (0.5\,\%CO)}{(0.26422\,\%N_2) - \%O_2 + (0.5\,\%CO)}$$

% CO_2	=	3.20
% O_2	=	15.24
% CO	=	0.00
% N_2	=	81.56

= 241.5

Fuel Factor

$$F_o = \frac{21 - \%O_2}{\%CO_2}$$

% CO_2	=	3.20
% O_2	=	15.24

= 1.800

If F_o is between 1.016 and 1.130 the fuel could be anthracite or lignite
If F_o is between 1.083 and 1.230 the fuel could be bituminous coal
If F_o is between 1.210 and 1.413 the fuel could be oil
If F_o is between 1.600 and 1.836 the fuel could be natural gas

Percent Isokinetic of Sampling Rate, %

$$I = \frac{100\,T_s\left[0.002669\,V_{lc} + \frac{V_m\,\gamma}{T_m}\left(P_{bar} + \frac{\Delta H}{13.6}\right)\right]}{60\,\theta\,v_s\,P_s\,A_n}$$

T_s (°R)	=	1402.40	ΔH	=	2.304
V_{lc}	=	292	θ	=	250
V_m	=	203.543	v_s	=	37.11
γ	=	0.983	P_s	=	29.73
T_m (°R)	=	514.02	A_n	=	0.001032
P_{bar}	=	29.61			

= 101.6

Filterable Particulate Concentration, gr/dscf

$$C_{s\,TSP} = \frac{0.0154\,W_{TSP}}{V_{m(std)}}$$

W_{TSP}	=	0.380
$V_{m(std)}$	=	204.559

= 0.00003

Filterbale Particulate Concentration Corrected to 7% O_2

$$C_{s\,TSP}\,@7\%O_2 = C_{s\,TSP}\,\frac{20.9 - 7}{20.9 - \%O_2}$$

$C_{s\,TSP}$	=	0.00003
$\%O_2$	=	15.24

= 0.0001

Filterable Particulate Emission Rate, lb/hr

$$E_{TSP\ lb/hr} = \frac{60\ Q_{sd}\ C_s}{7000}$$

= 0.012

Q_{sd}	=	49,951
C_s	=	0.00003

Filterable Particulate Emission Rate, lb/mmBtu

$$E_{TSP\ lb/mmBtu} = \frac{W_{TSP}}{453592\ V_{mstd}}\ F_d\ \frac{20.9}{20.9\ - \%O_2}$$

= 0.0001

W_{TSP}	=	0.380
V_{mstd}	=	204.559
F_d	=	8624
$\%O_2$	=	15.24

Condensable Particulate Matter Concentration, gr/dscf

$$C_{s\ CPM} = \frac{0.0154\ m_{cpm}}{V_{m(std)}}$$

= 0.00001

m_{cpm}	=	0.100
$V_{m(std)}$	=	204.559

Condensable Particulate Matter Emission Rate, lb/hr

$$E_{CPM\ lb/hr} = \frac{60\ Q_{sd}\ C_{s\ CPM}}{7000}$$

= 0.003

Q_{sd}	=	49,951
$C_{s\ CPM}$	=	0.00001

Condensable Particulate Matter Emission Rate, lb/mmBtu

$$E_{CPM\ lb/mmBtu} = \frac{m_{cpm}}{453592\ V_{m(std)}}\ F_d\ \frac{20.9}{20.9\ - \%O_2}$$

= 0.0000

m_{cpm}	=	0.100
$V_{m\ (std)}$	=	204.559
F_d	=	8624
$\%O_2$	=	15.24

Total Particulate Matter Concentration, gr/dscf

$$C_{t\ PM_{2.5}} = \frac{0.0154\ W_{t\ PM_{2.5}}}{V_{m(std)}}$$

= 0.0000

$W_{t\ PM2.5}$	=	0.557
$V_{m(std)}$	=	204.559

Total Particulate Matter Emission Rate, lb/hr

$$E_{PM_{2.5}\ lb/hr} = \frac{60\ Q_{sd}\ C_{s\ PM_{2.5}}}{7000}$$

= 0.018

Q_{sd}	=	49,951
$C_{t\ PM2.5}$	=	0.0000

Total Particulate Matter Emission Rate, lb/mmBtu

$$E_{PM_{2.5}\ lb/mmBtu} = \frac{W_{PM_{2.5}}}{453592\ V_{m(std)}}\ F_d\ \frac{20.9}{20.9\ - \%O_2}$$

= 0.00019

$W_{PM2.5}$	=	0.557
$V_{m\ (std)}$	=	204.559
F_d	=	8710
$\%O_2$	=	15.24

Nitrogen Oxides (NO_x) Concentration Corrected to 15% O_2

$$C_{s\ NOx}\ @15\%\ O_2 = C_{s\ NOx}\ \frac{20.9\ - 15}{20.9\ - \%O_2}$$

= 6.29

$C_{s\ NOx}$	=	6.03
$\%O_2$	=	15.24

Nitrogen Oxides (NO_x as NO_2) Emission Rate, lb/hr

$$E_{NOx\ lb/hr} = 60\ Q_{sd}\ \frac{FW_t}{385.3\ x\ 10^6}\ C_{s\ NOx}$$

= 2.16

Q_{sd}	=	49,951
FW_t	=	46.01
$C_{s\ NOx}$	=	6.03

Nitrogen Oxides (NO_x as NO_2) Emission Rate, lb/mmBtu

$$E_{NOx\ lb/mmBtu} = C_{s\ NOx}\ \frac{FW_t}{385.3\ x\ 10^6}\ F_d\ \frac{20.9}{20.9\ -\ \%O_2}$$

= 0.0232

$C_{s\ NOx}$	=	6.03
FW_t	=	46.01
F_d	=	8710
$\%O_2$	=	15.24

Carbon Monoxide (CO) Concentration Corrected to 15% O_2

$$C_{s\ CO}\ @7\%\ O_2 = C_{s\ CO}\ \frac{20.9\ - 15}{20.9\ - \%O_2}$$

= 0.42

$C_{s\ CO}$	=	0.40
$\%O_2$	=	15.24

Carbon Monoxide (CO) Emission Rate, lb/hr

$$E_{CO\ lb/hr} = 60\ Q_{sd}\ \frac{FW_t}{385.3\ x\ 10^6}\ C_{s\ CO}$$

= 0.087

Q_{sd}	=	49,951
FW_t	=	28.01
$C_{s\ CO}$	=	0.4

Total Hydrocarbon (THC as C1) Concentration, ppmd

$$C_{s\,THC} = \frac{THC}{M_{fd}}$$

= 0.30

THC	=	0.28
M_{fd}	=	0.937

Total Hydrocarbon (THC as C1) Concentration Corrected to 15% O_2

$$C_{s\,THC}\ @15\%\ O_2 = C_{s\,THC}\ \frac{20.9\ - 15}{20.9\ - \%O_2}$$

= 0.31

$C_{s\,THC}$	=	0.30
$\%O_2$	=	15.24

Total Hydrocarbon (THC as C1) Emission Rate, lb/hr

$$E_{THC\ lb/hr} = 60\ Q_{sd}\ \frac{FW_t}{385.3\ x\ 10^6}\ C_{s\,THC}$$

= 0.04

Q_{sd}	=	49,951
FW_t	=	16.042
$C_{s\,THC}$	=	0.30

Total Hydrocarbon (THC as C1) Emission Rate, lb/mmBtu

$$E_{THC\ lb/mmBtu} = C_{s\,THC}\ \frac{FW_t}{385.3\ x\ 10^6}\ F_d\ \frac{20.9}{20.9\ -\ \%O_2}$$

= 0.0004

$C_{s\,THC}$	=	0.30
FW_t	=	16.042
F_d	=	8710
$\%O_2$	=	15.24

Volatile Organic Compound (VOC as C1) Concentration, ppm

$$C_{s\,VOC\ (C1)} = C_{s\,THC}\ - CH_{4\,ppmd}\ - 2\left(C_2H_{6\,ppmd}\right)$$

= 0.30

$C_{s\,THC}$	=	0.30
$CH_{4\,ppmd}$	=	0.00
$C_2H_{6\,ppmd}$	=	0.00

Volatile Organic Compound (VOC as C3) Concentration, ppm

$$C_{s\,VOC\ (C3)} = \frac{C_{s\,VOC\ (C1)}}{3}$$

= 0.10

$C_{s\,VOC\ (C1)}$	=	0.30

Volatile Organic Compound (VOC as C1) Concentration Corrected to 15% O_2

$$C_{s\,VOC\,(C1)}\ @15\%\ O_2 = C_{s\,VOC\,(C1)}\ \frac{20.9\ - 15}{20.9\ - \%O_2}$$

= 0.31

$C_{s\,VOC\,(C1)}$	=	0.30
$\%O_2$	=	15.24

Volatile Organic Compound (VOC as C3) Concentration Corrected to 15% O_2

$$C_{s\,VOC\,(C3)}\ @15\%\ O_2 = C_{s\,VOC\,(C3)}\ \frac{20.9\ - 15}{20.9\ - \%O_2}$$

= 0.10

$C_{s\,VOC\,(C3)}$	=	0.10
$\%O_2$	=	15.24

Volatile Organic Compound (VOC as C1) Emission Rate, lb/hr

$$E_{VOC\,(C1)\,lb/hr} = 60\ Q_{sd}\ \frac{FW_t}{385.3\ x\ 10^6}\ C_{s\,VOC\,(C1)}$$

= 0.04

Q_{sd}	=	49,951
FW_t	=	16.042
$C_{s\,VOC\,(C1)}$	=	0.30

Volatile Organic Compound (VOC as C3) Emission Rate, lb/hr

$$E_{VOC\,(C3)\,lb/hr} = 60\ Q_{sd}\ \frac{FW_t}{385.3\ x\ 10^6}\ C_{s\,VOC\,(C3)}$$

= 0.03

Q_{sd}	=	49,951
FW_t	=	44.0956
$C_{s\,VOC\,(C3)}$	=	0.10

Volatile Organic Compound (VOC as C1) Emission Rate, lb/mmBtu

$$E_{VOC\,(C1)\,lb/mmBtu} = C_{s\,VOC\,(C1)}\ \frac{FW_t}{385.3\ x\ 10^6}\ F_d\ \frac{20.9}{20.9\ -\ \%O_2}$$

= 0.00040

$C_{s\,VOC\,(C1)}$	=	0.30
FW_t	=	16.042
F_d	=	8710
$\%O_2$	=	15.24

Appendix E

Calibration Data

Airgas
an Air Liquide company

Airgas Specialty Gases
Airgas USA, LLC
6141 Easton Road
Bldg 1
Plumsteadville, PA 18949
Airgas.com

CERTIFICATE OF ANALYSIS

Grade of Product: EPA Protocol

Part Number:	E03NI60E15A1069	Reference Number:	160-401438826-1
Cylinder Number:	CC428437	Cylinder Volume:	158.2 CF
Laboratory:	124 - Plumsteadville - PA	Cylinder Pressure:	2015 PSIG
PGVP Number:	A12019	Valve Outlet:	590
Gas Code:	CO2,O2,BALN	Certification Date:	Mar 05, 2019

Expiration Date: Mar 05, 2027

Certification performed in accordance with "EPA Traceability Protocol for Assay and Certification of Gaseous Calibration Standards (May 2012)" document EPA 600/R-12/531, using the assay procedures listed. Analytical Methodology does not require correction for analytical interference. This cylinder has a total analytical uncertainty as stated below with a confidence level of 95%. There are no significant impurities which affect the use of this calibration mixture. All concentrations are on a mole/mole basis unless otherwise noted.

Do Not Use This Cylinder below 100 psig, i.e. 0.7 megapascals.

ANALYTICAL RESULTS

Component	Requested Concentration	Actual Concentration	Protocol Method	Total Relative Uncertainty	Assay Dates
CARBON DIOXIDE	18.00 %	18.34 %	G1	+/- 1% NIST Traceable	03/05/2019
OXYGEN	22.00 %	22.13 %	G1	+/- 1% NIST Traceable	03/05/2019
NITROGEN	Balance			-	

CALIBRATION STANDARDS

Type	Lot ID	Cylinder No	Concentration	Uncertainty	Expiration Date
NTRM	06011807	K008272	23.04 % CARBON DIOXIDE/NITROGEN	0.5%	Jun 27, 2022
NTRM	16060507	CC401541	23.204 % OXYGEN/NITROGEN	0.2%	Dec 24, 2021

ANALYTICAL EQUIPMENT

Instrument/Make/Model	Analytical Principle	Last Multipoint Calibration
HORIBA VA5011 T5V6VU9P NDIR CO2	NDIR	Feb 12, 2019
SIEMENS OXYMAT 6 - W5951 - O2	PARAMAGNETIC	Feb 05, 2019

Triad Data Available Upon Request

Signature on file

Approved for Release

Airgas
an Air Liquide company

Airgas Specialty Gases
Airgas USA LLC
6141 Easton Road
Plumsteadville, PA 18949
Airgas.com

CERTIFICATE OF ANALYSIS

Grade of Product: EPA PROTOCOL STANDARD

Part Number:	E03NI80E15A0138	Reference Number:	160-402444782-1
Cylinder Number:	CC338233	Cylinder Volume:	141.0 CF
Laboratory:	124 - Plumsteadville - PA	Cylinder Pressure:	2015 PSIG
PGVP Number:	A12022	Valve Outlet:	590
Gas Code:	CO2,O2,BALN	Certification Date:	May 18, 2022

Expiration Date: May 18, 2030

Certification performed in accordance with "EPA Traceability Protocol for Assay and Certification of Gaseous Calibration Standards (May 2012)" document EPA 600/R-12/531, using the assay procedures listed. Analytical Methodology does not require correction for analytical interference. This cylinder has a total analytical uncertainty as stated below with a confidence level of 95%. There are no significant impurities which affect the use of this calibration mixture. All concentrations are on a mole/mole basis unless otherwise noted. The results relate only to the items tested. The report shall not be reproduced except in full without approval of the laboratory. Do Not Use This Cylinder below 100 psig, i.e. 0.7 megapascals.

ANALYTICAL RESULTS

Component	Requested Concentration	Actual Concentration	Protocol Method	Total Relative Uncertainty	Assay Dates
CARBON DIOXIDE	10.00 %	10.02 %	G1	+/- 0.6% NIST Traceable	05/18/2022
OXYGEN	10.00 %	9.977 %	G1	+/- 0.3% NIST Traceable	05/18/2022
NITROGEN	Balance				

CALIBRATION STANDARDS

Type	Lot ID	Cylinder No	Concentration	Uncertainty	Expiration Date
NTRM	06010615	K008685	7.016 % CARBON DIOXIDE/NITROGEN	+/- 0.5%	Nov 19, 2027
NTRM	09060233	CC263101	9.961 % OXYGEN/NITROGEN	+/- 0.3%	Nov 05, 2024

ANALYTICAL EQUIPMENT

Instrument/Make/Model	Analytical Principle	Last Multipoint Calibration
HORIBA VA5011 T5V6VU9P NDIR CO2	NDIR	May 11, 2022
SIEMENS OXYMAT 6 - N1-W5-951 - O2	PARAMAGNETIC	May 11, 2022

Triad Data Available Upon Request

Signature on file

Approved for Release

Airgas
an Air Liquide company

Airgas Specialty Gases
Airgas USA LLC
630 United Drive
Durham, NC 27713
Airgas.com

CERTIFICATE OF ANALYSIS

Grade of Product: EPA PROTOCOL STANDARD

Part Number:	E03NI99E15A1035	Reference Number:	122-402143090-1
Cylinder Number:	CC427947	Cylinder Volume:	144.3 CF
Laboratory:	124 - Durham (SAP) - NC	Cylinder Pressure:	2015 PSIG
PGVP Number:	B22021	Valve Outlet:	660
Gas Code:	CO,NO,NOX,BALN	Certification Date:	Jul 07, 2021

Expiration Date: Jul 07, 2024

Certification performed in accordance with "EPA Traceability Protocol for Assay and Certification of Gaseous Calibration Standards (May 2012)" document EPA 600/R-12/531, using the assay procedures listed. Analytical Methodology does not require correction for analytical interference. This cylinder has a total analytical uncertainty as stated below with a confidence level of 95%. There are no significant impurities which affect the use of this calibration mixture. All concentrations are on a mole/mole basis unless otherwise noted. The results relate only to the items tested. The report shall not be reproduced except in full without approval of the laboratory. Do Not Use This Cylinder below 100 psig, i.e. 0.7 megapascals.

ANALYTICAL RESULTS

Component	Requested Concentration	Actual Concentration	Protocol Method	Total Relative Uncertainty	Assay Dates
NOX	12.00 PPM	12.00 PPM	G1	+/- 0.7% NIST Traceable	06/30/2021, 07/07/2021
CARBON MONOXIDE	12.00 PPM	12.01 PPM	G1	+/- 0.8% NIST Traceable	06/30/2021
NITRIC OXIDE	12.00 PPM	11.99 PPM	G1	+/- 1.0% NIST Traceable	06/30/2021, 07/07/2021
NITROGEN	Balance				

CALIBRATION STANDARDS

Type	Lot ID	Cylinder No	Concentration	Uncertainty	Expiration Date
NTRM	19060809	CC714855	26.69 PPM CARBON MONOXIDE/NITROGEN	+/- 0.7%	Jun 04, 2025
PRM	C1948110.02	APEX1324263 NOx	10.01 PPM NOx/NITROGEN	+/- 0.5%	Dec 23, 2022
NTRM	16010109	KAL004228	9.95 PPM NITRIC OXIDE/NITROGEN	+/- 1.0%	Oct 16, 2022
GMIS	16010109	KAL004228 NOX	9.95 PPM NOx/NITROGEN	+/- 0.6%	Oct 16, 2022

The SRM, NTRM, PRM, or RGM noted above is only in reference to the GMIS used in the assay and not part of the analysis.

ANALYTICAL EQUIPMENT

Instrument/Make/Model	Analytical Principle	Last Multipoint Calibration
SIEMENS ULTRAMAT 6 N1M6726	Nondispersive Infrared (NDIR)	Jun 02, 2021
THERMO NO 42I-1202839462	Chemiluminescence	Jun 30, 2021
THERMO NOX 42I-1202839462	Chemiluminescence	Jun 30, 2021

Triad Data Available Upon Request

Signature on file

Approved for Release

Airgas
an Air Liquide company

Airgas Specialty Gases
Airgas USA LLC
630 United Drive
Durham, NC 27713
Airgas.com

CERTIFICATE OF ANALYSIS

Grade of Product: EPA PROTOCOL STANDARD

Part Number:	E03NI99E15A0863	Reference Number:	122-402599032-1
Cylinder Number:	EB0106462	Cylinder Volume:	144.3 CF
Laboratory:	124 - Durham (SAP) - NC	Cylinder Pressure:	2015 PSIG
PGVP Number:	B22022	Valve Outlet:	660
Gas Code:	CO,NO,NOX,BALN	Certification Date:	Nov 28, 2022

Expiration Date: Nov 28, 2025

Certification performed in accordance with "EPA Traceability Protocol for Assay and Certification of Gaseous Calibration Standards (May 2012)" document EPA 600/R-12/531, using the assay procedures listed. Analytical Methodology does not require correction for analytical interference. This cylinder has a total analytical uncertainty as stated below with a confidence level of 95%. There are no significant impurities which affect the use of this calibration mixture. All concentrations are on a mole/mole basis unless otherwise noted. The results relate only to the items tested. The report shall not be reproduced except in full without approval of the laboratory. Do Not Use This Cylinder below 100 psig, i.e. 0.7 megapascals.

ANALYTICAL RESULTS

Component	Requested Concentration	Actual Concentration	Protocol Method	Total Relative Uncertainty	Assay Dates
NOX	6.000 PPM	5.935 PPM	G1	+/- 0.7% NIST Traceable	11/21/2022, 11/28/2022
CARBON MONOXIDE	6.000 PPM	6.059 PPM	G1	+/- 1.0% NIST Traceable	11/21/2022
NITRIC OXIDE	6.000 PPM	5.884 PPM	G1	+/- 1.0% NIST Traceable	11/21/2022, 11/28/2022
NITROGEN	Balance				

CALIBRATION STANDARDS

Type	Lot ID	Cylinder No	Concentration	Uncertainty	Expiration Date
NTRM	21060423	CC365332	9.942 PPM CARBON MONOXIDE/NITROGEN	+/- 0.8%	Jul 23, 2027
PRM	C1948110.02	APEX1324263 NOx	10.01 PPM NOx/NITROGEN	+/- 0.5%	Dec 23, 2022
NTRM	16010104	KAL004087	9.95 PPM NITRIC OXIDE/NITROGEN	+/- 1.0%	Jun 07, 2026
GMIS	16010104	KAL004087 NOX	9.95 PPM NOx/NITROGEN	+/- 0.6%	May 14, 2024

The SRM, NTRM, PRM, or RGM noted above is only in reference to the GMIS used in the assay and not part of the analysis.

ANALYTICAL EQUIPMENT

Instrument/Make/Model	Analytical Principle	Last Multipoint Calibration
SIEMENS ULTRAMAT 6 N1M6726	Nondispersive Infrared (NDIR)	Nov 09, 2022
THERMO NO 42I-1202839462	Chemiluminescence	Nov 09, 2022
THERMO NOX 42I-1202839462	Chemiluminescence	Nov 09, 2022

Triad Data Available Upon Request

Signature on file

Approved for Release

Airgas
an Air Liquide company

Airgas Specialty Gases
Airgas USA, LLC
630 United Drive
Durham, NC 27713
Airgas.com

CERTIFICATE OF ANALYSIS

Grade of Product: EPA Protocol

Part Number:	E02AI99E15W0059	Reference Number:	122-401936871-1A
Cylinder Number:	CC504746	Cylinder Volume:	130.6 CF
Laboratory:	124 - Durham (SAP) - NC	Cylinder Pressure:	1800 PSIG
PGVP Number:	B22020	Valve Outlet:	660
Gas Code:	O2,NO2,BALN	Certification Date:	Nov 17, 2020

Expiration Date: Nov 17, 2023

Certification performed in accordance with "EPA Traceability Protocol for Assay and Certification of Gaseous Calibration Standards (May 2012)" document EPA 600/R-12/531, using the assay procedures listed. Analytical Methodology does not require correction for analytical interference. This cylinder has a total analytical uncertainty as stated below with a confidence level of 95%. There are no significant impurities which affect the use of this calibration mixture. All concentrations are on a mole/mole basis unless otherwise noted.

Do Not Use This Cylinder below 100 psig, i.e. 0.7 megapascals.

ANALYTICAL RESULTS

Component	Requested Concentration	Actual Concentration	Protocol Method	Total Relative Uncertainty	Assay Dates
NITROGEN DIOXIDE	9.000 PPM	9.291 PPM	G1	+/- 2.3% NIST Traceable	11/10/2020, 11/17/2020
AIR	Balance				

CALIBRATION STANDARDS

Type	Lot ID	Cylinder No	Concentration	Uncertainty	Expiration Date
GMIS	401085385102	CC511259	14.46 PPM NITROGEN DIOXIDE/NITROGEN	+/- 2.1	Oct 31, 2022
PRM	12386	D685025	9.91 PPM NITROGEN DIOXIDE/AIR	+/- 2.0%	Feb 20, 2020

The SRM, PRM or RGM noted above is only in reference to the GMIS used in the assay and not part of the analysis.

ANALYTICAL EQUIPMENT

Instrument/Make/Model	Analytical Principle	Last Multipoint Calibration
MKS FTIR NO2 018176583	FTIR	Nov 11, 2020

Triad Data Available Upon Request

PERMANENT NOTES:-NA-

Signature on file

Approved for Release

Airgas
an Air Liquide company

Airgas Specialty Gases
Airgas USA, LLC
630 United Drive
Durham, NC 27713
Airgas.com

CERTIFICATE OF ANALYSIS

Grade of Product: EPA Protocol

Part Number:	E02AI99E15AC431	Reference Number:	122-402071950-1
Cylinder Number:	ALM-040608	Cylinder Volume:	146.0 CF
Laboratory:	124 - Durham (SAP) - NC	Cylinder Pressure:	2015 PSIG
PGVP Number:	B22021	Valve Outlet:	590
Gas Code:	CH4,BALA	Certification Date:	Mar 29, 2021

Expiration Date: Mar 29, 2029

Certification performed in accordance with "EPA Traceability Protocol for Assay and Certification of Gaseous Calibration Standards (May 2012)" document EPA 600/R-12/531, using the assay procedures listed. Analytical Methodology does not require correction for analytical interference. This cylinder has a total analytical uncertainty as stated below with a confidence level of 95%. There are no significant impurities which affect the use of this calibration mixture. All concentrations are on a mole/mole basis unless otherwise noted.

Do Not Use This Cylinder below 100 psig, i.e. 0.7 megapascals.

ANALYTICAL RESULTS

Component	Requested Concentration	Actual Concentration	Protocol Method	Total Relative Uncertainty	Assay Dates
METHANE	8.500 PPM	8.554 PPM	G1	+/- 1.2% NIST Traceable	03/29/2021
AIR	Balance				

CALIBRATION STANDARDS

Type	Lot ID	Cylinder No	Concentration	Uncertainty	Expiration Date
NTRM	17060617	CC492269	4.986 PPM METHANE/AIR	+/- 0.8%	Jul 27, 2023

ANALYTICAL EQUIPMENT

Instrument/Make/Model	Analytical Principle	Last Multipoint Calibration
Nicolet 6700 AHR0801549 CH4	FTIR	Mar 03, 2021

Triad Data Available Upon Request

Signature on file

Approved for Release

Airgas Specialty Gases
Airgas USA LLC
6141 Easton Road
Plumsteadville, PA 18949
Airgas.com

CERTIFICATE OF ANALYSIS

Grade of Product: EPA PROTOCOL STANDARD

Part Number:	E02AI99E15A0448	Reference Number:	160-402289937-1
Cylinder Number:	CC29207	Cylinder Volume:	146.0 CF
Laboratory:	124 - Plumsteadville - PA	Cylinder Pressure:	2015 PSIG
PGVP Number:	A12021	Valve Outlet:	590
Gas Code:	CH4,BALA	Certification Date:	Nov 23, 2021

Expiration Date: Nov 23, 2029

Certification performed in accordance with "EPA Traceability Protocol for Assay and Certification of Gaseous Calibration Standards (May 2012)" document EPA 600/R-12/531, using the assay procedures listed. Analytical Methodology does not require correction for analytical interference. This cylinder has a total analytical uncertainty as stated below with a confidence level of 95%. There are no significant impurities which affect the use of this calibration mixture. All concentrations are on a mole/mole basis unless otherwise noted.

Do Not Use This Cylinder below 100 psig, i.e. 0.7 megapascals.

ANALYTICAL RESULTS

Component	Requested Concentration	Actual Concentration	Protocol Method	Total Relative Uncertainty	Assay Dates
METHANE	5.000 PPM	5.043 PPM	G1	+/- 0.9% NIST Traceable	11/23/2021
AIR	Balance				

CALIBRATION STANDARDS

Type	Lot ID	Cylinder No	Concentration	Uncertainty	Expiration Date
NTRM	17060615	CC490604	4.986 PPM METHANE/NITROGEN	+/- 0.8%	Jul 27, 2023

ANALYTICAL EQUIPMENT

Instrument/Make/Model	Analytical Principle	Last Multipoint Calibration
Nicolet iS50 FTIR AUP2110295 CH4	FTIR	Nov 01, 2021

Triad Data Available Upon Request

Signature on file

Approved for Release

Airgas
an Air Liquide company

Airgas Specialty Gases
Airgas USA, LLC
600 Union Landing Road
Cinnaminson, NJ 08077-0000
Airgas.com

CERTIFICATE OF ANALYSIS

Grade of Product: EPA Protocol

Part Number:	E02AI99E15A0444	Reference Number:	82-124598941-1
Cylinder Number:	XC011774B	Cylinder Volume:	146.2 CF
Laboratory:	124 - Riverton (SAP) - NJ	Cylinder Pressure:	2015 PSIG
PGVP Number:	B52017	Valve Outlet:	590
Gas Code:	CH4,BALA	Certification Date:	Jan 24, 2017

Expiration Date: Jan 24, 2025

Certification performed in accordance with "EPA Traceability Protocol for Assay and Certification of Gaseous Calibration Standards (May 2012)" document EPA 600/R-12/531, using the assay procedures listed. Analytical Methodology does not require correction for analytical interference. This cylinder has a total analytical uncertainty as stated below with a confidence level of 95%. There are no significant impurities which affect the use of this calibration mixture. All concentrations are on a volume/volume basis unless otherwise noted.

Do Not Use This Cylinder below 100 psig, i.e. 0.7 megapascals.

ANALYTICAL RESULTS

Component	Requested Concentration	Actual Concentration	Protocol Method	Total Relative Uncertainty	Assay Dates
METHANE	3.000 PPM	2.985 PPM	G1	+/- 1.0% NIST Traceable	01/24/2017
AIR	Balance			-	

CALIBRATION STANDARDS

Type	Lot ID	Cylinder No	Concentration	Uncertainty	Expiration Date

ANALYTICAL EQUIPMENT

Instrument/Make/Model	Analytical Principle	Last Multipoint Calibration
MKS 2031	FTIR	Jan 24, 2017

Triad Data Available Upon Request

Signature on file

Approved for Release

Canomara LLC
Critical Orifice Calibration

Date: 11/7/2022
DGM ID: 2170
Technician: E. Gutfran

Critical Orifice Id No.:	1500S-16		1500S-19		1500S-24	
Critical Vacuum	15		15		15	
K' factor	0.4444		0.5281		0.6614	
Run Number	1	2	1	2	1	2
DGM Final Reading (ft^3)	1001.349	7.299	14.346	21.424	30.218	39.043
DGM Initial Reading (ft^3)	995.415	1.349	7.301	14.346	21.424	30.218
Difference, Vm (ft^3)	5.934	5.950	7.045	7.078	8.794	8.825
Volume Criteria Met (>5ft^3)	**Yes**	**Yes**	**Yes**	**Yes**	**Yes**	**Yes**
DGM Initial (^oF)	74	74	75	77	79	81
DGM Final (^oF)	74	74	77	79	81	85
Average Temp., Tm	74	74	76	78	80	83
Time (min)	10	10	10	10	10	10
Delta H (in. H_2O)	1.2	1.2	1.7	1.7	2.6	2.6
Pbar (in. Hg)	29.87	29.87	29.87	29.87	29.87	29.87
Ambient Temp (^oF)	74	74	74	74	74	74
Pump Vacuum (in. Hg)	20	20	19	19	17	17
Vm(std) (ft^3)	5.872	5.888	6.954	6.961	8.636	8.618
Vcr(std) (ft^3)	5.744	5.744	6.826	6.826	8.549	8.549
DGM Cal. Factor, Y	0.978	0.976	0.982	0.981	0.990	0.992
Y Average	0.977		0.981		0.991	
Y Dev. from avg.[1]	0.13%		0.05%		0.10%	
Y Dev. from other[2]	Max Y:	0.991	Min Y:	0.977	Y deviation:	1.45% **good**
Delta H@	2.074	2.074	2.073	2.065	2.006	1.995
Delta H@ Average	2.074		2.069		2.001	
Delta H Dev. from avg.[3]	0.00%		0.19%		0.28%	

Average Y =	0.983
Average Delta H =	2.048

1. Y at each of the flow rates should not differ by more than +/- 2.0% from the average
2. If any critical orifice yields a DGM Y factor differing by more than 2% from others, recalibrate orifices
3. Average Delta H@ must be within 0.15 of the average

Vm(std) = 17.64 Vm (Pbar + deltaH/13.6) / (Tm + 460)

Vcr(std) = K' Pbar Time / SQRT(Tamb + 460)

Y = Vcr(std) / Vm(std)

Pitot Tube Inspection Form

40 CFR 60, Appendix A, Method 2

Pitot Number:	P-10-1	Inspected By:	Ed Gutfran
Inspection Date:	09/01/2022	Reviewed By:	Jim Canora

Pitot Type:	Detachable Tip	X	Fixed		PM10		
Wind Tunnel Calibration?	No	X	Yes		→	Coefficient: A side	
						B side	

Diagram 1

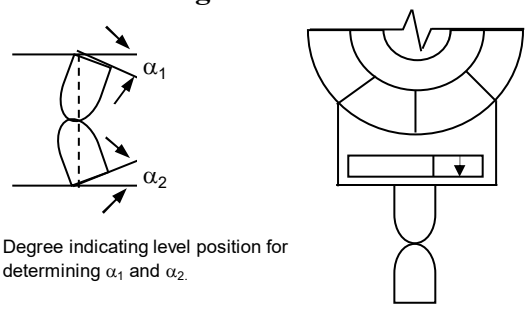

Degree indicating level position for determining α_1 and α_2.

Diagram 2

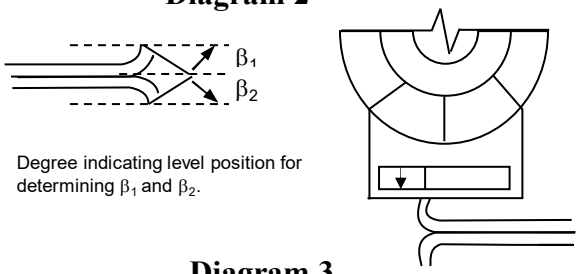

Degree indicating level position for determining β_1 and β_2.

Diagram 3

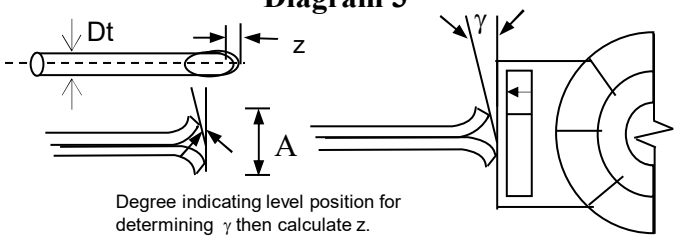

Degree indicating level position for determining γ then calculate z.

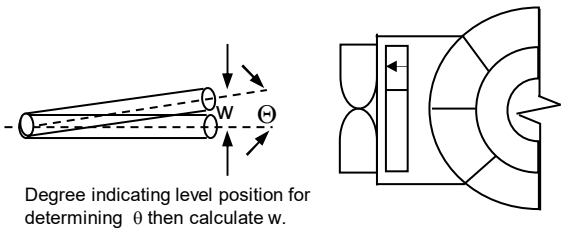

Degree indicating level position for determining θ then calculate w.

Level?	Yes
Obstructions?	No
Damaged?	No
Diagram 1	
$-10^o < \alpha_1 < +10^o =$	-1
$-10^o < \alpha_2 < +10^o =$	1
Diagram 2	
$-5^o < \beta_1 < +5^o =$	2
$-5^o < \beta_2 < +5^o =$	-1
Diagram 3	
$\gamma =$	0
$\Theta =$	1
A =	0.593
$P_a = P_b = A/2 =$	0.297
$0.188" \leq D_t \leq 0.375" =$	0.247
$1.05\ D_t < A/2 < 1.5\ D_t =$	YES
$z = A \tan \gamma < 0.125" =$	0.000
$w = A \tan \Theta < 0.03125" =$	0.010
w and z meet specs?	YES

Comments: S-type w/ 1/4" tubing
10-foot length

NOTES:

1. For Method 5 configurations verify the 3/4 inch separation between the pitot tube and the nozzle.
2. For Method 5 configurations verifiy that the thermocouple is either set back 2 inches from the pitot tube opening or has a 3/4 inch separation
3. As per Method 2, a pitot tube/probe that meets all criteria and design features is assigned a 0.84 coefficient.

Appendix F

Sampling Methods

EPA Method 1

Sample and Velocity Traverses for Stationary Sources

SUMMARY

A measurement site where the effluent stream is flowing in a known direction is selected, and the cross-section of the stack is divided into a number of equal areas. Traverse points are then located within each of these equal areas.

SITE SELECTION

- Sampling or velocity measurements must be taken at a position at least 2 stack diameters downstream and a half diameter upstream from any flow disturbance.
- The minimum allowed number of traverse points can be used when there is at least 8 stack diameters downstream and 2 stack diameters upstream.
- For particulate traverses refer to table 1 to determine the required number of traverse points
- For velocity traverses refer to table 2 to determine the required number of traverse points
- For circular stacks, locate the traverse points on two perpendicular diameters according to the diameter percentages listed in table 3.
- For rectangular stacks, divide the stack into as many equal areas as traverse points and locate each traverse point in the center of each area.
- Verify the absence of cyclonic flow using a Type S pitot tube and the manometer nulling technique.

Table 1

Particulate Traverses

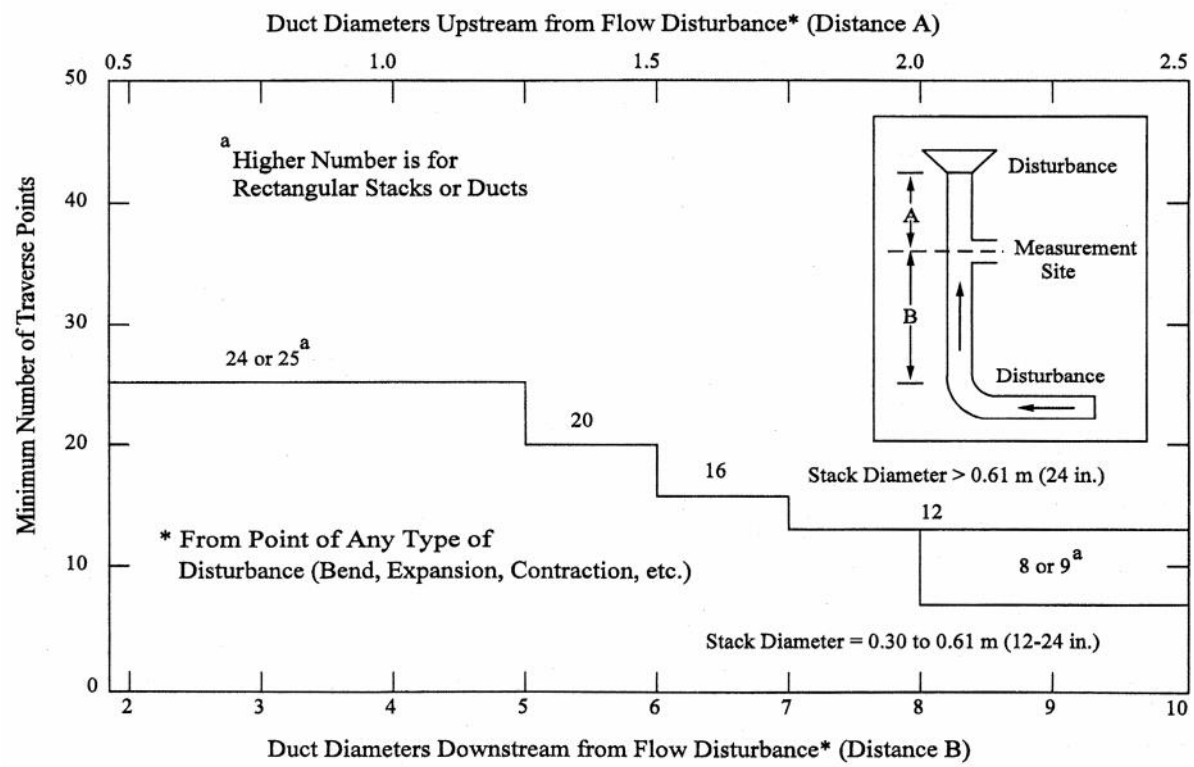

EPA Method 1

Sample and Velocity Traverses for Stationary Sources

Table 2

Velocity Traverses

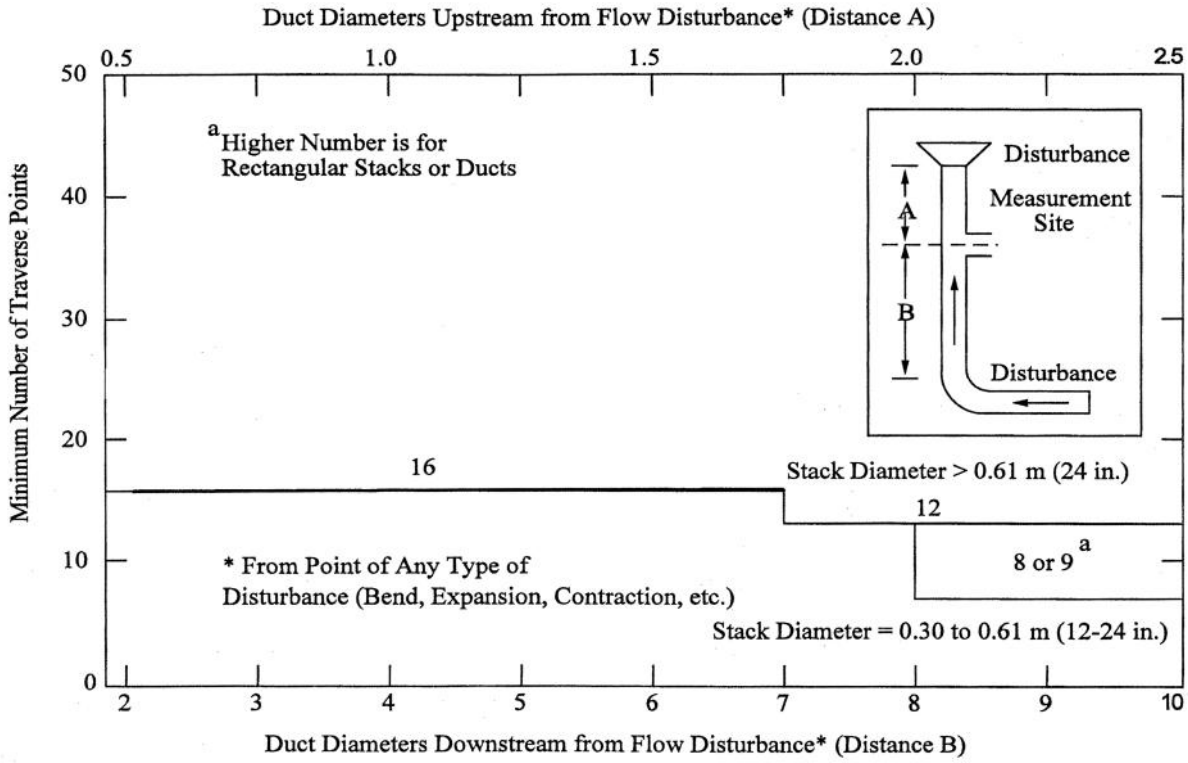

Table 3

Location of Traverse Points in Circular Stacks

Traverse Point	Number of Traverse Points on a Diameter				
	4	**6**	**8**	**10**	**12**
1	6.7	4.4	3.2	2.6	2.1
2	25.0	14.6	10.5	8.2	6.7
3	75.0	29.6	19.4	14.6	11.8
4	93.3	70.4	32.3	22.6	17.7
5		85.4	67.7	34.2	25.0
6		95.6	80.6	65.8	35.6
7			89.5	77.4	64.4
8			96.8	85.4	75.0
9				91.8	82.3
10				97.4	88.2
11					93.3
12					97.9

EPA Method 2

Determination of Stack Gas Velocity and Volumetric Flow Rate
(Type S Pitot Tube)

SUMMARY

The average gas velocity in a stack is determined from the gas density and from measurement of the average velocity head with a Type S (Stausscheibe or reverse type) pitot tube.

MEASUREMENT EQUIPMENT

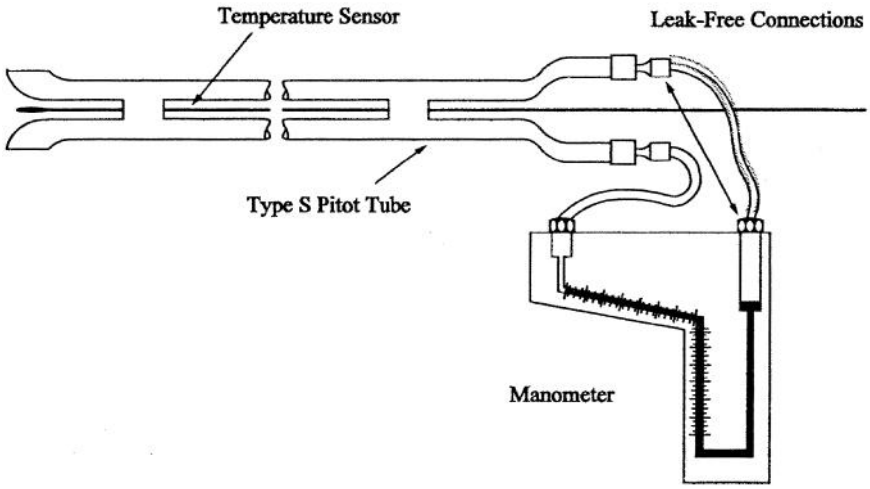

- Type S pitot tube constructed of stainless steel or other appropriate metal with a known coefficient.
- Leak free flexible tubing
- Differential pressure gauge such as in inclined manometer with a 10-inch water column with gradations of 0.01 - 0.1 inH_2O for Δp readings greater than 0.05 inH_2O.
- Temperature sensor such as a K-Type thermocouple attached to the pitot tube.

SAMPLING PROCEDURE

- It is recommended that a pre-test leak check be conducted by blowing into the positive side of the pitot tube until at least 3.0 inH_2O is registered on the manometer. Block off the opening and observe that the reading remains stable for at least 15 seconds. Follow the same procedure on the negative side of the pitot tube using suction.
- Measure velocity head and temperature and the traverse points determined by EPA Method 1.
- Measure the static pressure in the stack.
- Determine the atmospheric pressure.
- Determine the stack gas dry molecular weight using EPA Method 3 or 3a.
- Determine moisture content using EPA Method 4, wet-bulb/dry-bulb, or saturation.

QUALITY ASSURANCE

- Pitot tube calibration by either geometric or wind tunnel measurements.
- Thermocouple calibration using an ice bath and boiling water.
- Pitot tube leak checks conducted before and after each velocity traverse.
- Maintain a properly leveled and zeroed manometer.

EPA Method 3a

Determination of Oxygen and Carbon Dioxide Concentrations
In Emissions from Stationary Sources (Instrumental Analyzer Procedure)

SUMMARY

Effluent gas is continuously conveyed to an analyzer for measuring the concentration of O_2 or CO_2.

SAMPLING TRAIN

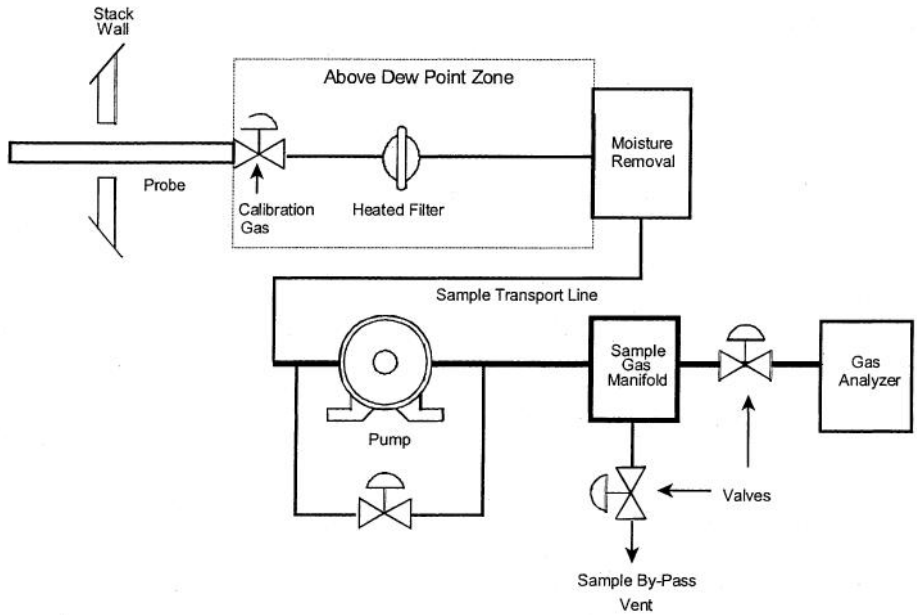

Components:

- Glass or stainless steel probe of sufficient length to traverse required sample points.
- An in-stack or out-of-stack filter made of material which is non-reactive to the sample gas. The filter is not required where no significant particulate matter is present.
- Sample line made of Teflon or other material that does not absorb or alter the sample gas.
- Condenser or dryer to remove moisture from the sample gas if measuring on a dry basis.
- Leak-free pump constructed of non-reactive material to pull sample through the system at a sufficient rate to minimize the response time.
- Manifold constructed of non-reactive material to allow the introduction of calibration gases either directly to the analyzer or into the measurement system at the probe and to direct a portion of the sample to the analyzer while diverting the rest of the sample to a by-pass discharge vent.
- Analyzer capable of meeting all performance requirements that continuously measures O_2 or CO_2.
- Computer based data acquisition system for recording measurements.

EPA Method 3a

Determination of Oxygen and Carbon Dioxide Concentrations
In Emissions from Stationary Sources (Instrumental Analyzer Procedure)

SAMPLING PROCEDURES

- Assemble the sampling system and conduct a leak check.
- Confirm that all calibration gas certifications are complete and not expired.
- Conduct an analyzer calibration error test.
- Conduct an initial system bias check and response time test.
- Perform a stratification test to determine the number of sample traverse points unless the measurement is only being used to determine the stack gas molecular weight in which case a single measurement point may be used.
- Position the probe at the first sampling point and purge the system for at least two times the response time. Traverse all required points sampling for equal time at each.
- Conduct a post-run system bias and drift assessment check.

QUALITY ASSURANCE

Measurement System:

- Calibration error is verified to be within ±2% of the calibration span or ±0.5 % difference
- System bias is verified to be within ±5% of the calibration span or ±0.5 % difference
- Drift is verified to be within ±3% of the calibration span or ±0.5 % difference

O_2 or CO_2 Analyzer:

- Analyzer used for testing has undergone manufacturer interference checks
- Analyzer resolution is < 2.0% full-scale range

Calibration Gas:

- Calibration uncertainty of ≤ 2% certified value
- Low-level gas < 20% of calibration span
- Mid-level gas 40-60% of calibration span
- High-level gas sets the calibration span with test measurements 20-100% of this value

Data:

- Data collection and calculations are conducted on a reviewed computer based system
- Data resolution ≤ 0.5% full-scale range
- Data recording frequency of ≤ 1-minute average
- Minute averages ≤ calibration span
- Run average ≤ calibration span

EPA Method 3a

Determination of Oxygen and Carbon Dioxide Concentrations
In Emissions from Stationary Sources (Instrumental Analyzer Procedure)

CALCULATIONS

Analyzer Calibration Error:

$$ACE = \frac{C_{DIR} - C_V}{C} x\ 100$$

ACE Analyzer calibration error, percent of calibration span
C_v Manufacturer certified concentration of a calibration gas (low, mid, high), ppmv
C_{DIR} Measured concentration of a calibration gas when introduced in direct calibration mode, ppmv
CS Calibration span, ppmv

System Bias:

$$SB = \frac{C_S - C_{DIR}}{C} x\ 100$$

SB System bias, percent of calibration span
C_S Measured concentration of a calibration gas when introduced in system calibration mode, ppmv
CS Calibration span, ppmv

Drift Assessment:

$$D = |SB_{final} - SB_i|$$

D Drift assessment, percent of calibration span
SB_{final} Post-run system bias, percent of calibration span
SB_i Pre-run system bias, percent of calibration span

Effluent Gas Concentration:

$$C_{Gas} = (C_{Avg} - C_O)\ x\ \frac{C_{MA}}{C_M - C_O}$$

C_{Gas} Average effluent gas concentration adjusted for bias, ppmv
C_{Avg} Average unadjusted gas concentration indicated by data recorder for the test run, ppmv
C_O Average of initial and final system bias responses from the low-level (or zero) calibration gas, ppmv
C_{MA} Actual concentration of the upscale calibration gas, ppmv
C_M Average of initial and final system bias responses for the upscale calibration gas, ppmv.

EPA Method 4

Determination of Moisture Content in Stack Gases

SUMMARY

A gas sample is extracted from the source at a constant rate. Moisture is removed from the sample stream by condensation and moisture is determined either gravimetrically or volumetrically.

SAMPLING TRAIN

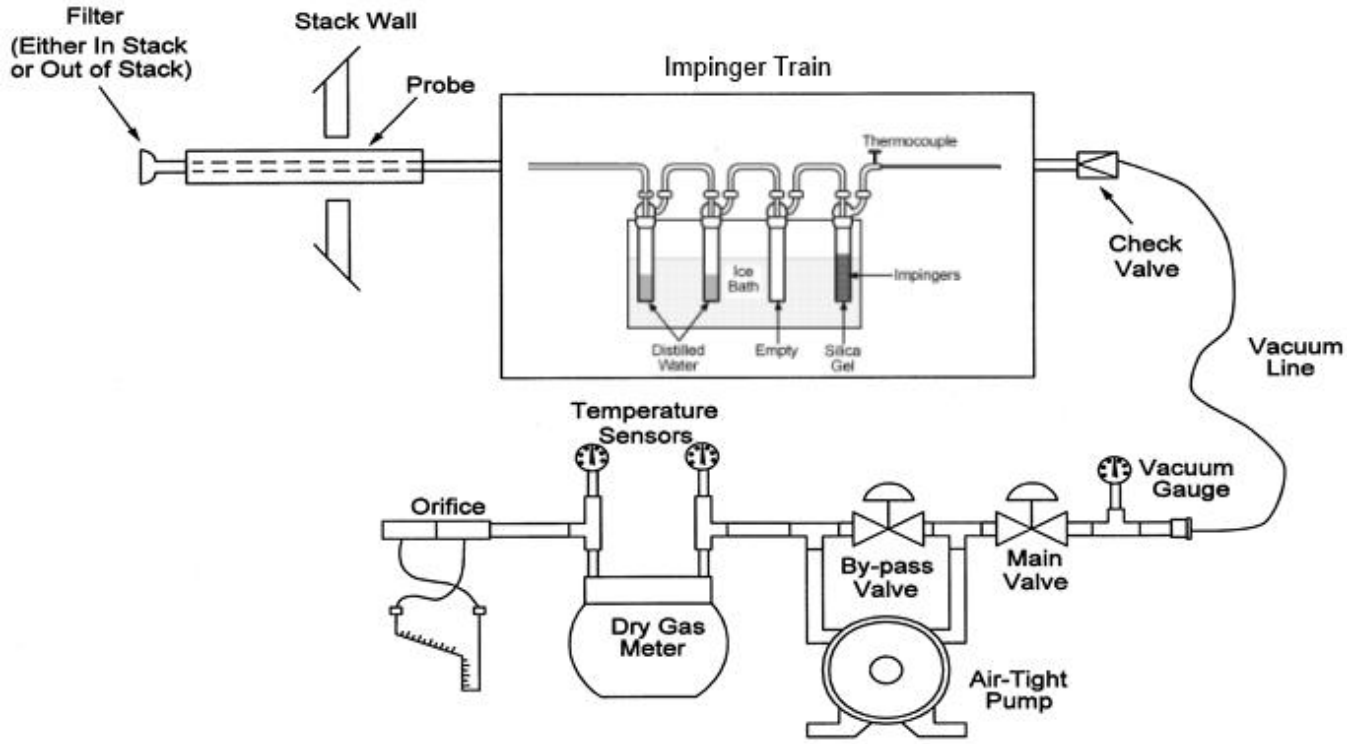

Components:

- Stainless steel or glass probe sufficiently heated to prevent condensation.
- In-stack or heated out-of-stack filter
- Teflon sample line
- 4 impingers connected in series placed in an ice bath (impinger exit < 68 °F)
    1. Modified Greenburg-Smith, ~100 ml water
    2. Greenburg-Smith, ~100 ml water
    3. Modified Greenburg-Smith, empty
    4. Modified Greenburg-Smith, indicating silica gel
- Umbilical with leak-free vacuum line
- Vacuum gauge, leak-free pump, temperature sensors and a calibrated dry gas meter
- Inclined manometer or equivalent for measuring orifice values

EPA Method 4

Determination of Moisture Content in Stack Gases

SAMPLING PROCEDURES

- Weigh the impinger train.
- Conduct a leak check from the tip of the probe at a vacuum of ≥ 15 inHg. Ensure that the leak rate is ≤ 0.020 cfm before starting a test run.
- Place the probe at the first sampling point.
- Begin sampling at a rate of approximately 0.75 cubic feet per minute. Collect sample data every 10 minutes including delta H, impinger outlet temperature, and dry gas meter inlet and outlet temperature.
- Conduct a post-test leak check from the tip of the probe or first impinger at a vacuum higher than the highest vacuum observed during sampling.

RECOVERY PROCEDURES

- Weigh the impinger train.
- Record the difference between the Post and Pre impinger train weights.
- Calculate the moisture content.

QUALITY ASSURANCE

Equipment:

- Dry gas meters are calibrated annually and after each field program.
- All glassware is cleaned prior to field use.
- Impinger exit temperature is monitored during testing to verify compliance with method specification.
- A leak checked is conducted post run at a vacuum equal to or greater than the maximum value reached during the test run.
- The dry gas meter calibration factor is verified after field use to be within 5% of the annual value.
- Temperature meters are calibrated annually and after each field use.

Data:

- Field data are recorded on prepared forms.
- Only reviewed spreadsheets are used to conduct data reduction calculations.
- All data and deliverables undergo peer review with a signoff form.

EPA Method 4

Determination of Moisture Content in Stack Gases

CALCULATIONS

Dry Gas Volume:

$$V_{m(std)} = V_m Y \frac{T_{std}\left(P_{bar} + \frac{\Delta H}{13.6}\right)}{T_m P_{std}}$$

$V_{m(std)}$ Volume of gas sample measured by the dry gas meter, corrected to standard conditions, dscf
V_m Volume of gas sample as measured by dry gas meter, dcf
Y Dry gas meter calibration factor
T_{std} Standard absolute temperature, 528 °R
P_{bar} Barometric pressure at the sampling site, inHg
ΔH Average pressure differential across the orifice meter, inH2O
T_m Absolute average DGM temperature, °R
P_{std} Standard absolute pressure, 29.92 inHg

Volume of Water Vapor Condensed:

$$V_{w(std)} = K_2 V_{lc}$$

$V_{w(std)}$ Volume of water vapor in the gas sample, corrected to standard conditions, scf
K_2 0.04706 ft/ml for English units
V_{lc} Total volume of liquid collected in impingers and silica gel

Moisture Content:

$$B_{ws} = \frac{V_{w(std)}}{V_{m(std)} + V_{w(std)}}$$

B_{ws} Water vapor in the gas stream, proportion by volume
$V_{w(std)}$ Volume of water vapor in the gas sample, corrected to standard conditions, scf

EPA Method 5

Determination of Particulate Matter from Stationary Sources

SUMMARY

Particulate matter (PM) is withdrawn isokinetically from the source and collected on a glass fiber filter maintained at a temperature of 248 ± 25 °F. The PM mass, including any material that condenses at or above the filtration temperature, is determined gravimetrically after the removal of uncombined water.

SAMPLING TRAIN

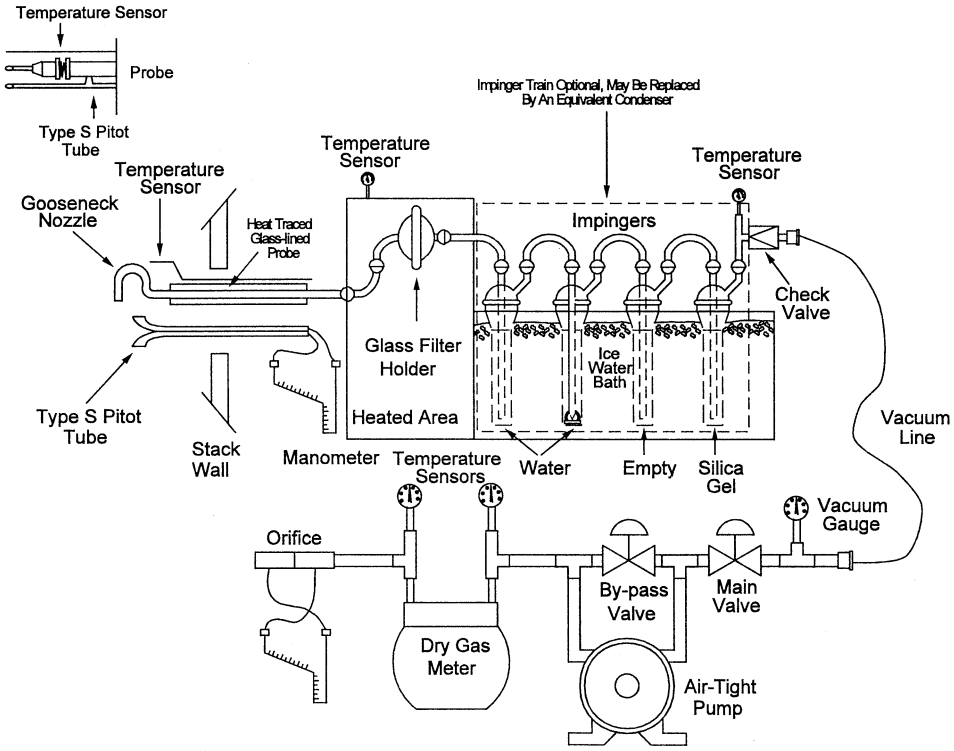

Components:

- Stainless steel or glass button-hook nozzle with a sharp, tapered leading edge appropriately sized for isokinetic sampling
- Heated quartz or borosilicate glass lined probe (248 ± 25 °F) with attached Type S pitot tube and Type K thermocouple
- Heated 3-inch glass fiber filter in glass holder with Teflon frit (248 ± 25 °F)
- 4 impingers connect in series placed in an ice bath (impinger exit ≤ 68 °F)
    1. Modified Greenburg-Smith, ~100 ml water
    2. Greenburg-Smith, ~100 ml water
    3. Modified Greenburg-Smith, empty
    4. Modified Greenburg-Smith, indicating silica gel
- Umbilical with leak-free vacuum line
- Vacuum gauge, leak-free pump, temperature sensors and a calibrated dry gas meter
- Dual inclined manometer or equivalent for measuring velocity head and orifice values

EPA Method 5

Sampling Procedures

- Select sampling site and minimum number of sampling points according to EPA Method 1. Mark an appropriately sized sampling probe with the points calculated for the location. Determine the sampling time per point ≥ 2 minutes.
- Determine appropriate nozzle size necessary to maintain isokinetic sampling conditions based on stack pressure, temperature, and velocity head range according EPA Method 2, stack molecular weight according to EPA Method 3/3a, and stack moisture content according to EPA Method 4.
- Calculate a k-factor based off the selected nozzle size and stack conditions. Assemble the sampling train as described above, weigh the impingers and place crushed ice around them.
- Conduct a leak check from the tip of the nozzle at a vacuum of ≥ 15 inHg. Ensure that the leak rate is ≤ 0.020 cfm before starting a test run.
- Place the probe at the first sampling point once all temperatures are within the required range.
- Begin sampling, making adjustments as necessary to maintain isokinetic sampling rate within ±10%.
- Traverse the stack using the predetermined sampling points.
- Conduct a post-test leak check at a vacuum higher than the highest vacuum observed during sampling.
- Calculate % isokinetic for the run to validate the test.

Recovery Procedures

- Weigh the impingers to determine moisture gain.
- Container 1 - Carefully remove the filter from its holder and place it in a labeled glass or polyethylene petri dish.
- Container 2 – Rinse and brush the nozzle, probe liner, and front half of the filter holder with reagent grade acetone (≤ 0.001 % residue) into a labeled glass or polyethylene sample container with a Teflon or other chemically resistant screw cap liner.
- Blank – Collect 200 ml of acetone from the wash bottle used to conduct recoveries into a labeled sample jar.

EPA Method 5

QUALITY ASSURANCE

Equipment:

- Pitot tubes, thermocouples, nozzles, and dry gas meters are calibrated annually.
- All glassware is cleaned prior to field use.
- Probe, filter, and impinger exit temperatures are carefully monitored during testing to ensure the values are maintained within the appropriate range.
- The entire sampling train is leak checked post run from the tip of the nozzle at a vacuum equal to or greater than the maximum value reached during the test run.
- Sampling rate is verified to be within 10% isokinetic variation (90%-110%).
- The dry gas meter calibration factor is verified after field use to be within 5% of the annual value.

Samples:

- New containers are used to collect samples.
- Each sample container is clearly labeled.
- A chain of custody is generated for all samples.
- Samples are transported upright in protective packaging.

Data:

- Field data are recorded on prepared forms.
- Only reviewed spreadsheets are used to conduct data reduction calculations.
- All data and deliverables undergo peer review with a signoff form.

EPA Method 5

CALCULATIONS

Dry Gas Volume:

$$V_{m(std)} = V_m Y \frac{T_{std}\left(P_{bar} + \frac{\Delta H}{13.6}\right)}{T_m P_{std}}$$

$V_{m(std)}$ Volume of gas sample measured by the dry gas meter, corrected to standard conditions, dscf
V_m Volume of gas sample as measured by dry gas meter, dcf
Y Dry gas meter calibration factor
T_{std} Standard absolute temperature, 528 °R
P_{bar} Barometric pressure at the sampling site, inHg
ΔH Average pressure differential across the orifice meter, inH2O
T_m Absolute average DGM temperature, °R
P_{std} Standard absolute pressure, 29.92 inHg

Volume of Water Vapor Condensed:

$$V_{w(std)} = K_2 V_{lc}$$

$V_{w(std)}$ Volume of water vapor in the gas sample, corrected to standard conditions, scf
K_2 0.04706 ft/ml for English units
V_{lc} Total volume of liquid collected in impingers and silica gel

Moisture Content:

$$B_{ws} = \frac{V_{w(std)}}{V_{m(std)} + V_{w(std)}}$$

B_{ws} Water vapor in the gas stream, proportion by volume
$V_{w(std)}$ Volume of water vapor in the gas sample, corrected to standard conditions, scf

Particulate Concentration:

$$C_s = \frac{K_3 m_n}{V_{m(std)}}$$

C_s Concentration of particulate matter in stack gas, dry basis, corrected to standard conditions, gr/dscf
K_3 0.0154 gr/mg for English units
M_n Total amount of particulate matter collected, mg

EPA Method 5

CALCULATIONS (CONTINUED)

Isokinetic Variation:

$$I = \frac{100T_s\left[K_4V_{lc} + \frac{(V_mY)}{T_m}\left(P_{\text{bar}} + \frac{\Delta H}{13.6}\right)\right]}{60\Theta v_s P_s A_n}$$

T_s	Absolute average stack gas temperature, °R
K_4	0.002669 ((inHg)(ft))/((ml)(°R)) for English units
V_{lc}	Total volume of liquid collected in impingers & silica gel, ml
Θ	Total sampling time, min
V_s	Stack gas velocity, ft/sec
P_s	Absolute stack gas pressure, inHg
A_n	Cross-sectional area of nozzle, ft^2

Alternative Post-Test Dry Gas Meter Calibration (EPA Method 5, Section 16.3)

$$Y_{qa} = \frac{q}{V_m}\left(\frac{0.0319\,(Tm + 460) \times 29}{DH_@\,[P_b + (DH_{avg}/13.6)]\,M_d}\right)^{\wedge 0.5}\ (DH^{\wedge 0.5})_{avg}$$

Y_{qa} =	Dry gas meter calibration check value, dimensionless
q =	Total run time, min
V_m =	Total sample volume measured by dry gas meter, dcf
T_m =	Average dry gas meter temperature, ^oF
P_b =	Barometric pressure, in. Hg
0.0319 =	$(29.92/528)(0.75)^2$ (in. Hg/^{o}R) cfm^2
DH_{avg} =	Average orifice meter differential, in H_20
$DH_@$ =	Orifice meter calibration coefficient, in H_20
M_d =	Dry molecular weight of stack gas, lb/lb-mole
29 =	Dry molecular weight of air, lb/lb-mole
13.6 =	Specific gravity of mercury

$$\text{Difference} = \frac{(Y_{qa} - Y)}{Y} \text{ within } \pm 5\%$$

EPA Method 7e

Determination of Nitrogen Oxides Emissions from Stationary Sources
(Instrumental Analyzer Procedure)

SUMMARY

A sample of the effluent gas is continuously conveyed to the analyzer for measuring the concentration of NO_X as NO_2. NO and NO_2 may be measured separately or simultaneously, but for the purposes of this method NO_X is the sum of NO and NO_2.

SAMPLING TRAIN

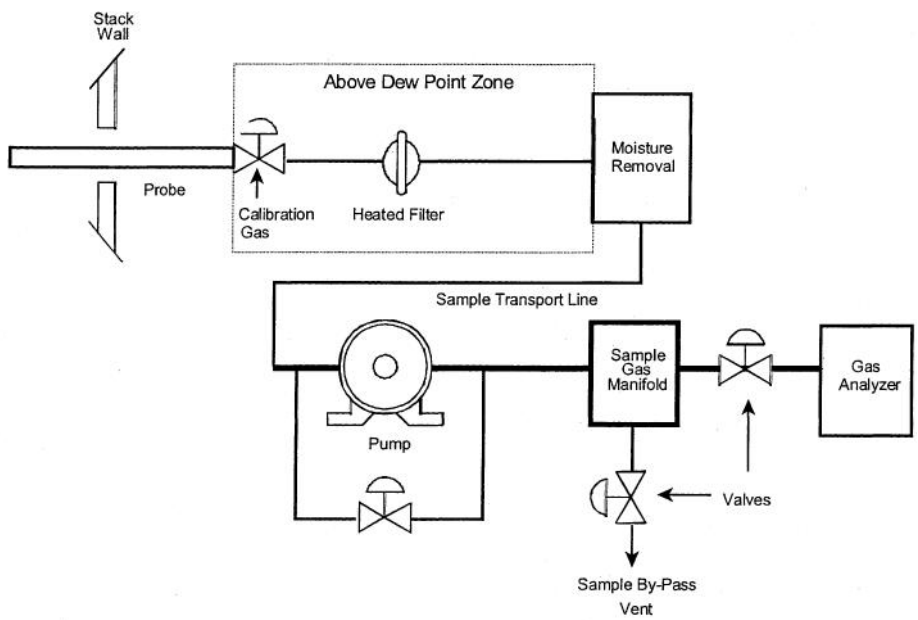

Components:

- Glass or stainless steel probe of sufficient length to traverse required sample points.
- An in-stack or out-of-stack filter made of material which is non-reactive to the sample gas. The filter is not required where no significant particulate matter is present.
- Heated sample line (250°F) made of Teflon or other material that does not absorb or alter the sample gas.
- Condenser or dryer to remove moisture from the sample gas if measuring on a dry basis.
- Leak-free pump constructed of non-reactive material to pull sample through the system at a sufficient rate to minimize the response time.
- Manifold constructed of non-reactive material to allow the introduction of calibration gases either directly to the analyzer or into the measurement system at the probe and to direct a portion of the sample to the analyzer while diverting the rest of the sample to a by-pass discharge vent.
- An analyzer capable of meeting all performance requirements that continuously measures NO_X.
- Computer based data acquisition system for recording measurements.

EPA Method 7e

Determination of Nitrogen Oxides Emissions from Stationary Sources
(Instrumental Analyzer Procedure)

SAMPLING PROCEDURES

- Assemble the sampling system and conduct a leak check.
- Confirm that all calibration gas certifications are complete and not expired.
- Conduct an analyzer calibration error test.
- Conduct an initial system bias check and response time test.
- Conduct an NO_2 to NO conversion efficiency test if the analyzer being used performs this conversion to measure NO_x.
- Perform a stratification test to determine the number of sample traverse points.
- Position the probe at the first sampling point and purge the system for at least two times the response time. Traverse all required points sampling for equal time at each.
- Conduct a post-run system bias and drift assessment check.

QUALITY ASSURANCE

Measurement System:

- Calibration error is verified to be within ±2% of the calibration span or ±0.5 ppmv difference
- System bias is verified to be within ±5% of the calibration span or ±0.5 ppmv difference
- Drift is verified to be within ±3% of the calibration span or ±0.5 ppmv difference

NO_X Analyzer:

- Analyzer used for testing has undergone manufacturer interference checks
- Analyzer resolution is < 2.0% full-scale range
- Converter efficiency is verified to be ≥90% or demonstrate a decrease from NO_{XPeak} of ≤ 2%

Calibration Gas:

- Calibration uncertainty of ≤ 2% certified value
- Low-level gas < 20% of calibration span
- Mid-level gas 40-60% of calibration span
- High-level gas sets the calibration span with test measurements 20-100% of this value
- Converter efficiency gas concentration is 40-60 ppm NO_2

Data:

- Data collection and calculations are conducted on a reviewed computer based system
- Data resolution ≤ 0.5% full-scale range
- Data recording frequency of ≤ 1-minute average
- Minute averages ≤ calibration span
- Run average ≤ calibration span

EPA Method 7e

Determination of Nitrogen Oxides Emissions from Stationary Sources
(Instrumental Analyzer Procedure)

CALCULATIONS

Analyzer Calibration Error:

$$ACE = \frac{C_{DIR} - C_V}{C} x\ 100$$

ACE Analyzer calibration error, percent of calibration span
C_v Manufacturer certified concentration of a calibration gas (low, mid, high), ppmv
C_{DIR} Measured concentration of a calibration gas when introduced in direct calibration mode, ppmv
CS Calibration span, ppmv

System Bias:

$$SB = \frac{C_S - C_{DIR}}{C} x\ 100$$

SB System bias, percent of calibration span
C_S Measured concentration of a calibration gas when introduced in system calibration mode, ppmv
CS Calibration span, ppmv

Drift Assessment:

$$D = |SB_{final} - SB_i|$$

D Drift assessment, percent of calibration span
SB_{final} Post-run system bias, percent of calibration span
SB_i Pre-run system bias, percent of calibration span

Effluent Gas Concentration:

$$C_{Gas} = (C_{Avg} - C_O)\ x\ \frac{C_{MA}}{C_M - C_O}$$

C_{Gas} Average effluent gas concentration adjusted for bias, ppmv
C_{Avg} Average unadjusted gas concentration indicated by data recorder for the test run, ppmv
C_O Average of initial and final system bias responses from the low-level (or zero) calibration gas, ppmv
C_{MA} Actual concentration of the upscale calibration gas, ppmv
C_M Average of initial and final system bias responses for the upscale calibration gas, ppmv.

EPA Method 10

Determination of Carbon Monoxide Emissions from Stationary Sources
(Instrumental Analyzer Procedure)

SUMMARY

Effluent gas is continuously conveyed to an analyzer for measuring the concentration of CO. Alternatively, sample gas may be collected in a Tedlar bag followed by analysis with a calibrated analyzer.

SAMPLING TRAIN

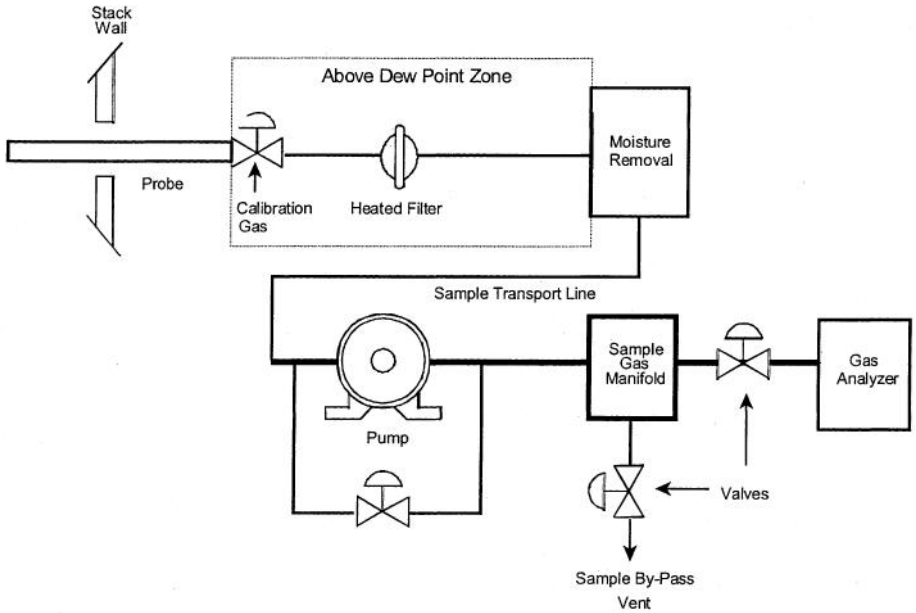

Components:

- Glass or stainless steel probe of sufficient length to traverse required sample points.
- An in-stack or out-of-stack filter made of material which is non-reactive to the sample gas. The filter is not required where no significant particulate matter is present.
- Heated Sample line (250ºF) made of Teflon or other material that does not absorb or alter the sample gas.
- Condenser or dryer to remove moisture from the sample gas if measuring on a dry basis.
- Leak-free pump constructed of non-reactive material to pull sample through the system at a sufficient rate to minimize the response time.
- Manifold constructed of non-reactive material to allow the introduction of calibration gases either directly to the analyzer or into the measurement system at the probe and to direct a portion of the sample to the analyzer while diverting the rest of the sample to a by-pass discharge vent.
- An analyzer capable of meeting all performance requirements that continuously measures CO.
- Computer based data acquisition system for recording measurements.

EPA Method 10

Determination of Carbon Monoxide Emissions from Stationary Sources
(Instrumental Analyzer Procedure)

SAMPLING PROCEDURES

- Assemble the sampling system and conduct a leak check.
- Confirm that all calibration gas certifications are complete and not expired.
- Conduct an analyzer calibration error test.
- Conduct an initial system bias check and response time test.
- Perform a stratification test to determine the number of sample traverse points.
- Position the probe at the first sampling point and purge the system for at least two times the response time. Traverse all required points sampling for equal time at each.
- Conduct a post-run system bias and drift assessment check.

QUALITY ASSURANCE

Measurement System:

- Calibration error is verified to be within ±2% of the calibration span or ±0.5 ppmv difference
- System bias is verified to be within ±5% of the calibration span or ±0.5 ppmv difference
- Drift is verified to be within ±3% of the calibration span or ±0.5 ppmv difference

CO Analyzer:

- Analyzer used for testing has undergone manufacturer interference checks
- Analyzer resolution is < 2.0% full-scale range

Calibration Gas:

- Calibration uncertainty of ≤ 2% certified value
- Low-level gas < 20% of calibration span
- Mid-level gas 40-60% of calibration span
- High-level gas sets the calibration span with test measurements 20-100% of this value

Data:

- Data collection and calculations are conducted on a reviewed computer based system
- Data resolution ≤ 0.5% full-scale range
- Data recording frequency of ≤ 1-minute average
- Minute averages ≤ calibration span
- Run average ≤ calibration span

EPA Method 10

Determination of Carbon Monoxide Emissions from Stationary Sources
(Instrumental Analyzer Procedure)

CALCULATIONS

Analyzer Calibration Error:

$$ACE = \frac{C_{DIR} - C_V}{C} x\ 100$$

ACE Analyzer calibration error, percent of calibration span
C_v Manufacturer certified concentration of a calibration gas (low, mid, high), ppmv
C_{DIR} Measured concentration of a calibration gas when introduced in direct calibration mode, ppmv
CS Calibration span, ppmv

System Bias:

$$SB = \frac{C_S - C_{DIR}}{C} x\ 100$$

SB System bias, percent of calibration span
C_S Measured concentration of a calibration gas when introduced in system calibration mode, ppmv
CS Calibration span, ppmv

Drift Assessment:

$$D = |SB_{final} - SB_i|$$

D Drift assessment, percent of calibration span
SB_{final} Post-run system bias, percent of calibration span
SB_i Pre-run system bias, percent of calibration span

Effluent Gas Concentration:

$$C_{Gas} = (C_{Avg} - C_O)\ x\ \frac{C_{MA}}{C_M - C_O}$$

C_{Gas} Average effluent gas concentration adjusted for bias, ppmv
C_{Avg} Average unadjusted gas concentration indicated by data recorder for the test run, ppmv
C_O Average of initial and final system bias responses from the low-level (or zero) calibration gas, ppmv
C_{MA} Actual concentration of the upscale calibration gas, ppmv
C_M Average of initial and final system bias responses for the upscale calibration gas, ppmv.

EPA Method 25a

Determination of Total Gaseous Organic Concentration
Using a Flame Ionization Analyzer

SUMMARY

A gas sample is extracted from the source through a heated sample line and glass fiber filter to a flame ionization analyzer.

SAMPLING TRAIN

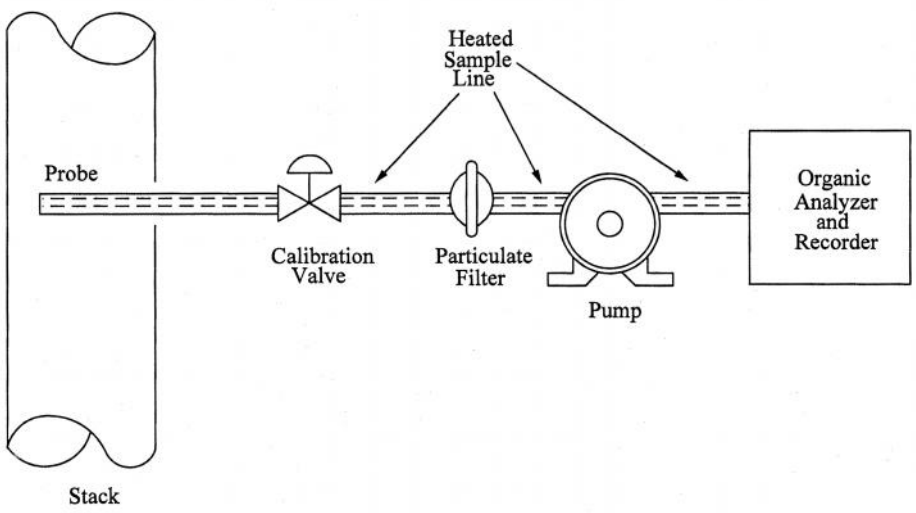

Components:

- Stainless steel probe heated to ≥ 220 °F.
- A glass fiber in-stack filter or a glass fiber out-of-stack filter heated to ≥ 220 °F. The filter is not required where no significant particulate matter is present.
- Teflon or stainless steel sample line heated to ≥ 220 °F.
- Leak-free pump constructed of non-reactive material to pull sample through the system at a sufficient rate to minimize the response time.
- Manifold constructed of non-reactive material to allow the introduction of calibration gases into the measurement system at the probe.
- Flame ionization analyzer capable of meeting all performance requirements.
- Computer based data acquisition system for recording measurements.

EPA Method 25a

Determination of Total Gaseous Organic Concentration
Using a Flame Ionization Analyzer

SAMPLING PROCEDURES

- Assemble the sampling system and conduct a leak check.
- Confirm that all calibration gas certifications are complete and not expired.
- Conduct an analyzer calibration error test sending gas through the entire measurement system.
- Conduct a response time test.
- Position the probe so that sample is collected from the centrally located 10% area of the stack.
- Begin sampling after ≥ 2 times the sampling response time has passed.
- Conduct a post-run drift assessment check.

QUALITY ASSURANCE

Measurement System:

- Calibration error is verified to be within ±5% of the calibration gas value
- Drift is verified to be within ±3% of the span value

Analyzer:

- Analyzer used for testing has undergone manufacturer interference checks
- Analyzer resolution is < 2.0% full-scale range

Calibration and Support Gas:

- Calibration uncertainty of ≤ 2% certified value
- High purity air zero gas < 0.1 ppmv organic material
- Low-level calibration gas 25-35% of the applicable span value
- Mid-level gas 45-55% of the applicable span value
- High-level gas 80-90% of the applicable span value
- Fuel consisting of 100% H_2

Data:

- Data collection and calculations are conducted on a reviewed computer based system
- Data resolution ≤ 0.5% full-scale range
- Data recording frequency of ≤ 1-minute average
- Minute averages ≤ calibration span
- Run average ≤ calibration span

EPA Method 25a

Determination of Total Gaseous Organic Concentration
Using a Flame Ionization Analyzer

CALCULATIONS

Analyzer Calibration Error:

$$\mathrm{ACE} = \frac{C_S\text{-}C_V}{C_V}\ x\ 100$$

ACE Analyzer calibration error, percent of calibration gas value
C_S Measured concentration of a calibration gas through the sampling system, ppmv
C_v Manufacturer certified concentration of a calibration gas (low, mid, high), ppmv

Drift Assessment:

$$\mathrm{D} = \frac{C_S\text{-}C_i}{C}\ x\ 100$$

D Drift assessment, percent of span
C_S Measured concentration of a calibration gas through the sampling system, ppmv
C_i Initial analyzer response, ppmv
CS Calibration span, ppmv

EPA Method 202

Method for Determining Condensable Particulate Emissions from Stationary Sources.

SUMMARY

Particulate matter (PM) is withdrawn isokinetically from the source in accordance with EPA Methods 5, 17 or 201A. The Method 5, 17 and 201A front half sampling train components remove filterable particulate matter before the sample gas is drawn through the Method 202 components to collect condensable particulate matter (CPM). The Method 202 sampling train components begin with a glass coil condenser, followed by two dry impingers, and a Teflon filter. Condensate collected in the dry impingers and on the Teflon filter is recovered. The condensate and filter are extracted and organic and aqueous fractions are dessicated and weighed to determine the mass of total CPM.

SAMPLING TRAIN

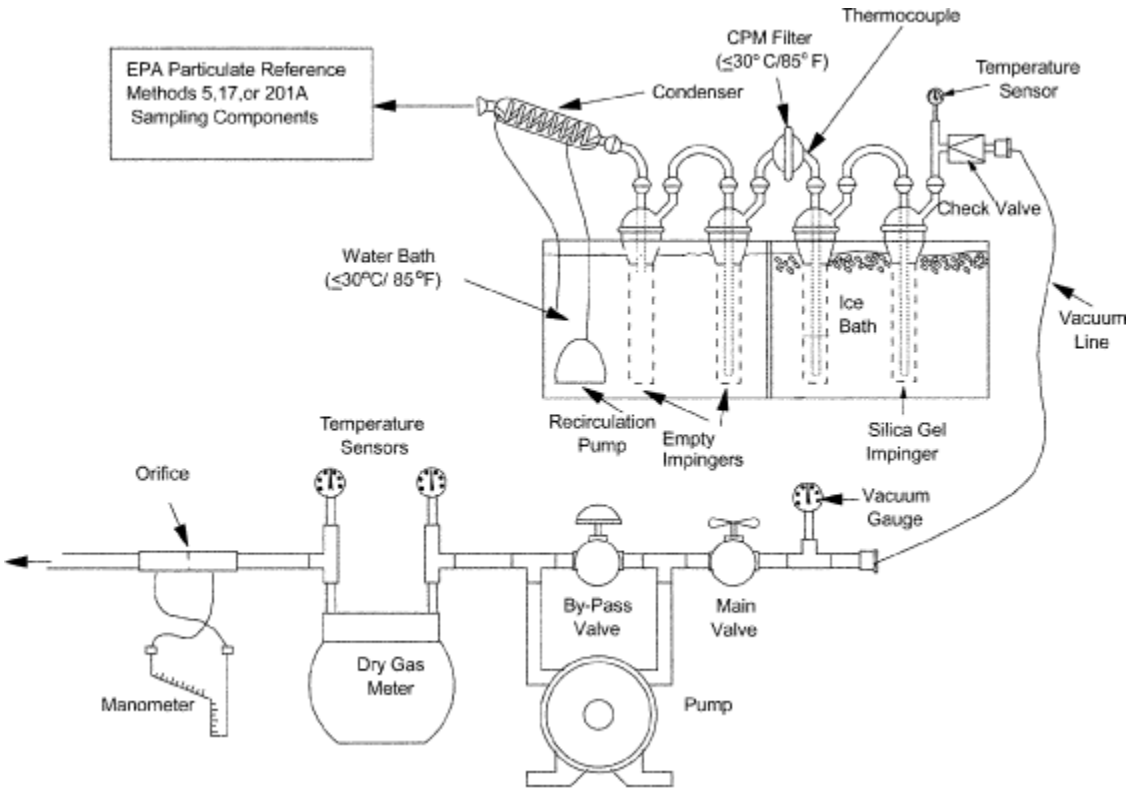

Components:

- Glass spiral condenser
- 2 impingers connected in series (≤ 85 °F)
    1. dropout impinger, empty
    2. modified Greenburg-Smith impinge, empty
- Glass or stainless steel filter holder and Teflon filter with thermocouple (≥65 °F and ≤ 85 °F)
- 2 impingers connect in series placed in an ice bath (impinger exit ≤ 68 °F)
    1. Modified Greenburg-Smith, 100 ml H_2O
    2. Modified Greenburg-Smith, indicating silica gel
- Umbilical with leak-free vacuum line
- Vacuum gauge, leak-free pump, temperature sensors and a calibrated dry gas meter
- Dual inclined manometer or equivalent for measuring velocity head and orifice values

EPA Method 202

Method for Determining Condensable Particulate Emissions from Stationary Sources.

SAMPLING PROCEDURES

- Select sampling site and minimum number of sampling points according to EPA Method 1. Refer to Method 4, 17 or 201A for sampling specifications
- Assemble the Method 202 sampling train components as shown above, weigh the impingers, place water around the first two impingers, activate the condenser recirculation pump, and place crushed ice around the third and fourth impingers.
- Conduct a leak check from the tip of the nozzle at a vacuum equal to or greater than the highest anticipated during testing. Ensure that the leak rate is ≤ 0.020 cfm before starting a test run.
- Place the probe at the first sampling point.
- Begin sampling at the isokinetic rate in accordance with EPA Methods 5, 17 or 201A.
- Traverse the stack using the predetermined sampling points.
- Conduct a post-test leak check at a vacuum higher than the highest vacuum observed during sampling.

RECOVERY PROCEDURES

- Weigh the impingers to determine moisture gain.
- Conduct a pressurized purge of the CPM train by transferring water collected in the condenser and dropout impinge into the backup impinger. If the tip of the backup impinge does not extend below the water level, add a measured amount of degassed, deionized ultra-filtered water. Purge at a minimum of 14 liters per minute using filtered ultra-high purity nitrogen.
- Container 1 (Aqueous liquid impinger contents) – Quantitatively transfer liquid from the dropout and the impinger prior to the CPM filter into a clean sample bottle (glass or plastic). Rinse the probe extension, condenser, each impinger and the connecting glassware, and the front half of the CPM filter twice with water. Recover the rinse water and add it to the same sample bottle. Mark the liquid level on the bottle.
- Container 2 (Organic rinses) – Rinse the probe extension, condenser, each impinger and the connecting glassware, and the front half of the CPM filter twice with acetone. Then repeat the entire rinse procedure with two rinses of hexane, and save the hexane rinses in the same container as the acetone rinse. Mark the liquid level on the bottle.
- Container 3 (CPM filter) – Place the filter in a labeled petri dish.
- Acetone Field Reagent Blank – Take 200 ml of acetone directly from the wash bottle and place it in a clean, leak-proof container. Mark the liquid level on the bottle.
- Water Field Reagent Blank – Take 200 ml of water directly from the wash bottle and place it in a clean, leak-proof container. Mark the liquid level on the bottle.
- Hexane Field Reagent Blank – Take 200 ml of water directly from the wash bottle and place it in a clean, leak-proof container. Mark the liquid level on the bottle.
- Field Train Recover Blank – After the first or second run, add 100 ml of water to the first impinger, purge and recover the assembled train as above. This blank weight will be subtracted from the field sample weights (max of 2.0 mg).

EPA Method 202

Method for Determining Condensable Particulate Emissions from Stationary Sources.

Analytical Procedures

- Container 3 – Conduct triplicate extractions of the inorganic fraction of the CPM filter using deionized, ultra-filtered water and combine with container 1. Conduct triplicate extractions of the organic fraction of the CPM filter using hexane and combine with container 2.
- Container 1 – Use hexane to extract the organic fraction and add it to container 2. Transfer the remaining aqueous fraction to a tarred beaker, evaporate to dryness, desiccate for 24 hours, and weigh to a constant weight to the nearest 0.1 mg.
- Container 2 – Transfer the organic fraction to a tarred beaker, evaporate to dryness, desiccate for 24 hours, and weigh to a constant weight to the nearest 0.1 mg.
- Acetone Field Reagent Blank - Transfer 150 ml of the acetone to a tarred beaker, evaporate to dryness at room temperature and pressure in a laboratory hood, desiccate for 24 hours, and weigh to a constant weight to the nearest 0.1 mg.
- Water Field Reagent Blank - Transfer 150 ml of the water to a tarred beaker, evaporate to dryness, desiccate for 24 hours, and weigh to a constant weight to the nearest 0.1 mg.
- Hexane Field Reagent Blank - Transfer 150 ml of the hexane to a tarred beaker, evaporate to dryness at room temperature and pressure in a laboratory hood, desiccate for 24 hours, and weigh to a constant weight to the nearest 0.1 mg.
- Field Train Recover Blank – Analyze following the same procedures as above.

Quality Assurance

Equipment

- Pitot tubes, thermocouples, nozzles, and dry gas meters are calibrated annually.
- All glassware is cleaned and baked (6 hours at 300 °C) prior to field use.
- Probe, filter, and impinger exit temperatures are carefully monitored during testing to ensure the values are maintained within the appropriate range.
- The entire sampling train is leak checked post run from the tip of the nozzle at a vacuum equal to or greater than the maximum value reached during the test run.
- Sampling rate is verified to be within 10% isokinetic variation (90%-110%).
- The dry gas meter calibration factor is verified after field use to be within 5% of the annual value.

Samples

- New containers are used to collect samples.
- Each sample container is clearly labeled.
- A chain of custody is generated for all samples.
- Samples are transported upright in protective packaging.

Data

- Field data are recorded on prepared forms.
- Only reviewed spreadsheets are used to conduct data reduction calculations.
- All data and deliverables undergo peer review with a signoff form.

EPA Method 202

Method for Determining Condensable Particulate Emissions from Stationary Sources.

CALCULATIONS

Dry Gas Volume:

$$V_{m(std)} = V_m Y \frac{T_{std}\left(P_{bar} + \frac{\Delta H}{13.6}\right)}{T_m P_{std}}$$

$V_{m(std)}$ Volume of gas sample measured by the dry gas meter, corrected to standard conditions, dscf
V_m Volume of gas sample as measured by dry gas meter, dcf
Y Dry gas meter calibration factor
T_{std} Standard absolute temperature, 528 °R
P_{bar} Barometric pressure at the sampling site, inHg
ΔH Average pressure differential across the orifice meter, inH2O
T_m Absolute average DGM temperature, °R
P_{std} Standard absolute pressure, 29.92 inHg

Volume of Water Vapor Condensed:

$$V_{w(std)} = K_2 V_{lc}$$

$V_{w(std)}$ Volume of water vapor in the gas sample, corrected to standard conditions, scf
K_2 0.04706 ft/ml for English units
V_{lc} Total volume of liquid collected in impingers and silica gel

Moisture Content:

$$B_{ws} = \frac{V_{w(std)}}{V_{m(std)} + V_{w(std)}}$$

B_{ws} Water vapor in the gas stream, proportion by volume
$V_{w(std)}$ Volume of water vapor in the gas sample, corrected to standard conditions, scf

Condensable Particulate Matter (CPM) Concentration:

$$C_{cpm} = \frac{m_{cpm}}{V_{m(std)}}$$

C_{cpm} Concentration of condensable particulate matter in stack gas, dry basis, corrected to standard conditions, mg/dscf
M_{cpm} Total amount of condensable particulate matter collected, mg

EPA Method 202

Method for Determining Condensable Particulate Emissions from Stationary Sources.

CALCULATIONS (CONTINUED)

Isokinetic Variation:

$$I = \frac{100T_s\left[K_4V_{lc} + \frac{(V_mY)}{T_m}\left(P_{\text{bar}} + \frac{\Delta H}{13.6}\right)\right]}{60\Theta v_sP_sA_n}$$

T_s	Absolute average stack gas temperature, °R
K_4	0.002669 ((inHg)(ft))/((ml)(°R)) for English units
V_{lc}	Total volume of liquid collected in impingers & silica gel, ml
Θ	Total sampling time, min
V_s	Stack gas velocity, ft/sec
P_s	Absolute stack gas pressure, inHg
A_n	Cross-sectional area of nozzle, ft^2