Federal Highway Administration
Florida Division

ADMINISTRATIVE ACTION

FINDING OF NO SIGNIFICANT IMPACT (FONSI)/SECTION 4(f) *DE MINIMIS*

U.S. Department of Transportation

Federal Highway Administration and

Florida Department of Transportation, District Four

Financial Project Number: 229664-2-22-01
Federal Project Number: 4752-030-P
Efficient Transportation Decision Making (ETDM) No. 8127

SR 7 from SR 704 (Okeechobee Boulevard) to CR 809A (Northlake Boulevard)
Palm Beach County, Florida

The proposed action is: Extend SR 7 to CR 809A (Northlake Boulevard). Includes the widening of SR 7 from two to four lanes from SR 704 (Okeechobee Boulevard) to 60th Street, construction of a four lane divided facility from 60th Street to the east entrance of the Ibis Golf and Country Club, and widening of an existing County roadway from two to four lanes from the east entrance of the Ibis Golf and Country Club to Northlake Boulevard; a bridge crossing of the M-Canal; roundabouts at 60th Street and the entrance to the Ibis Golf and Country Club Community. Project length is 8.5 miles.

Submitted pursuant to 42 U.S.C. 4332 (2)(c)

2-19-15
Date

for Buddy Cunill
Division Administrator
Federal Highway Administration

The proposed action will not have a significant effect on the human environment. Proposed improvements are generally located within existing right of way reserved for transportation purposes and will not result in any relocations. Based on a Biological Opinion dated November 13, 2014, the US Fish and Wildlife Service determined that the construction and operation of the proposed action is not likely to jeopardize the continued existence of the Everglade snail kite. Unavoidable impacts to the wetlands and habitats will be mitigated for in accordance with local, state, and federal permitting agencies.

Finding of No Significant Impact

SR 7 Extension Project Development and Environment (PD&E) Study
From SR 704 (Okeechobee Boulevard) to CR 809A (Northlake Boulevard)
MP 0.000 to MP 8.536
Palm Beach County, Florida
Financial Project ID No. 229664-2-22-01
Federal Aid Project No. 4752-030-P
ETDM No. 8127

Florida Department of Transportation
District 4
December 2014

Federal Highway Administration
Florida Division

ADMINISTRATIVE ACTION

FINDING OF NO SIGNIFICANT IMPACT (FONSI)/SECTION 4(f) *DE MINIMIS*

U.S. Department of Transportation

Federal Highway Administration and

Florida Department of Transportation, District Four

Financial Project Number: 229664-2-22-01
Federal Project Number: 4752-030-P
Efficient Transportation Decision Making (ETDM) No. 8127

SR 7 from SR 704 (Okeechobee Boulevard) to CR 809A (Northlake Boulevard)
Palm Beach County, Florida

The proposed action is: Extend SR 7 to CR 809A (Northlake Boulevard). Includes the widening of SR 7 from two to four lanes from SR 704 (Okeechobee Boulevard) to 60th Street, construction of a four lane divided facility from 60th Street to the east entrance of the Ibis Golf and Country Club, and widening of an existing County roadway from two to four lanes from the east entrance of the Ibis Golf and Country Club to Northlake Boulevard; a bridge crossing of the M-Canal; roundabouts at 60th Street and the entrance to the Ibis Golf and Country Club Community. Project length is 8.5 miles.

Submitted pursuant to 42 U.S.C. 4332 (2)(c)

Date	Division Administrator Federal Highway Administration

The proposed action will not have a significant effect on the human environment. Proposed improvements are generally located within existing right of way reserved for transportation purposes and will not result in any relocations. Based on a Biological Opinion dated November 13, 2014, the US Fish and Wildlife Service determined that the construction and operation of the proposed action is not likely to jeopardize the continued existence of the Everglade snail kite. Unavoidable impacts to the wetlands and habitats will be mitigated for in accordance with local, state, and federal permitting agencies.

STATEMENT ON FINDING OF NO SIGNIFICANT IMPACT

The Federal Highway Administration (FHWA) has determined that this project will not have any significant impact on the human environment. The Finding of No Significant Impact is based on the attached Environmental Assessment which has been independently evaluated by FHWA and determined to adequately and accurately discuss the environmental issues and impacts of the proposed project. It provides sufficient evidence and analysis for determining that an Environmental Impact Statement is not required. The FHWA takes full responsibility for the accuracy, scope, and contents of the attached Environmental Assessment.

PROJECT LOCATION

The location of the proposed action is in Palm Beach County, Florida as shown in Figure 1. In general, the west side of the project corridor consists of residential areas defined by the Village of Royal Palm Beach, Acreage, and Ibis Golf and Country Club. The east side of the project corridor consists of natural areas and preserves identified as the Pond Cypress Natural Area and Grassy Waters Preserve. The Pond Cypress Natural Area is owned by Palm Beach County. The Grassy Waters Preserve is owned by the City of West Palm Beach and serves as the City's drinking water supply.

PURPOSE AND NEED

The purpose of the project is to extend SR 7 to the Northlake Boulevard. Currently, the north-south travel network between Okeechobee Boulevard and Northlake Boulevard is limited. The Turnpike is located four miles to the east of SR 7 and Seminole Pratt Whitney Road is located six miles to the west. For residents of the Village of Royal Palm Beach and the Acreage, the primary travel route from Okeechobee Boulevard to Northlake Boulevard includes a combination of Royal Palm Beach Boulevard, Orange Boulevard, and Coconut Boulevard. This route is approximately eight miles long and includes six miles through a two lane undivided facility fronted by residential properties. Widening along this local route would result in significant impacts to the community including potential right of way and relocation impacts. The benefit of the proposed alignment is that it is located along the edge of existing developments within an existing corridor reserved for transportation purposes.

From a regional perspective, SR 7 is one of four major facilities connecting Miami-Dade, Broward, and Palm Beach Counties (Figure 2). Other north-south facilities, listed in order from west to east, include the Florida's Turnpike, Interstate 95 (I-95), and US 1. Travel demands within the project area will continue to grow and connecting SR 7 with Northlake Boulevard is vital to satisfying capacity and mobility needs. The proposed improvement would be usable and beneficial to the surrounding network and could function independently without the need for additional network improvement. The connection up to Northlake Boulevard is expected to operate acceptably, meeting the requirements for independent utility.

The proposed extension of SR 7 would also facilitate the hurricane evacuation process by providing additional capacity and connectivity in this area. There are no designated evacuation routes or evacuation shelters within the study area. The extension of SR 7 would facilitate the evacuation process by improving the linkage between Northlake Boulevard and Southern Boulevard. Southern Boulevard (SR 80) is an east-west facility that traverses from the coast towards the interior part of the State.

Figure 1: Project Location Map

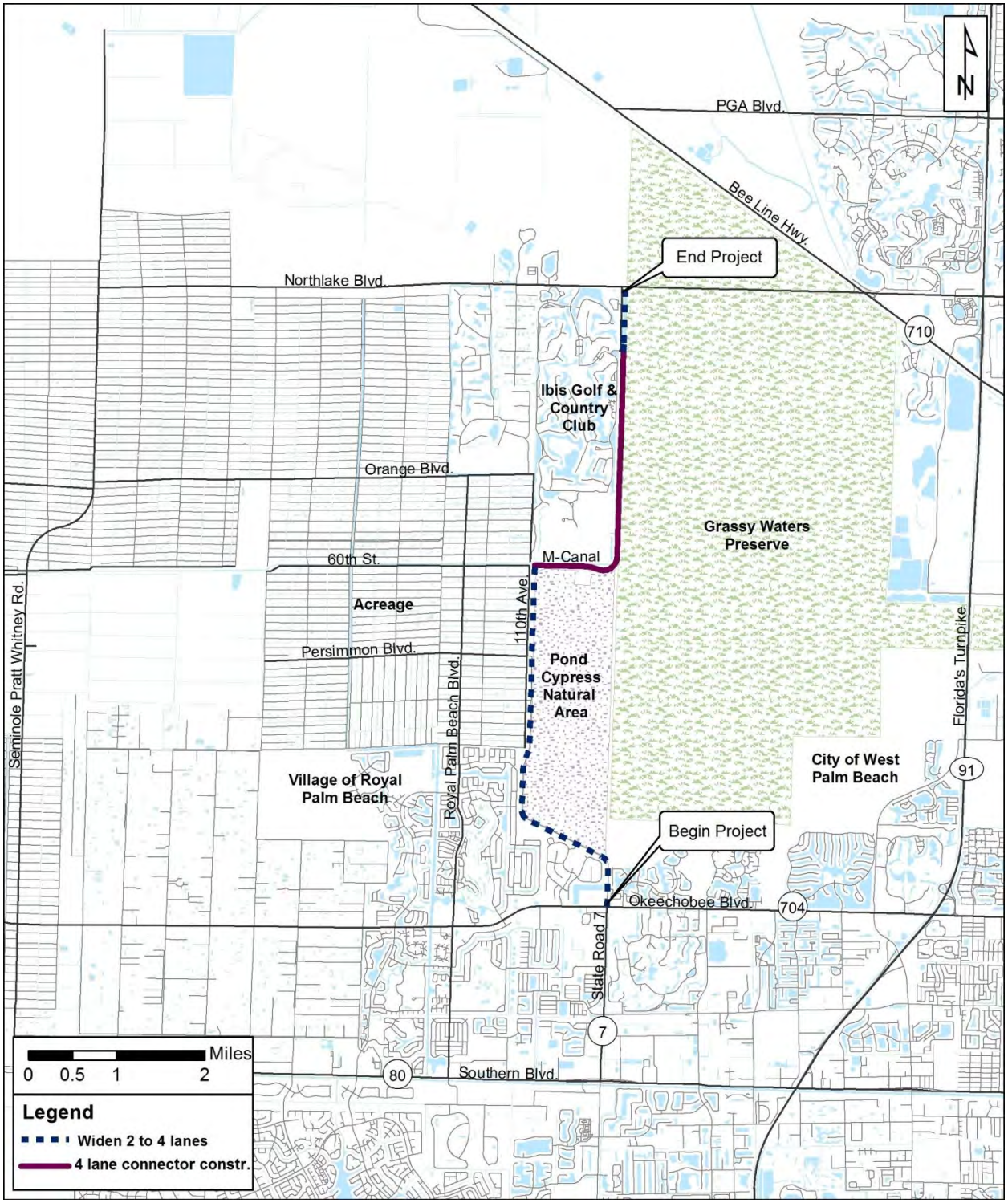

Figure 2: Tri-County Regional Network

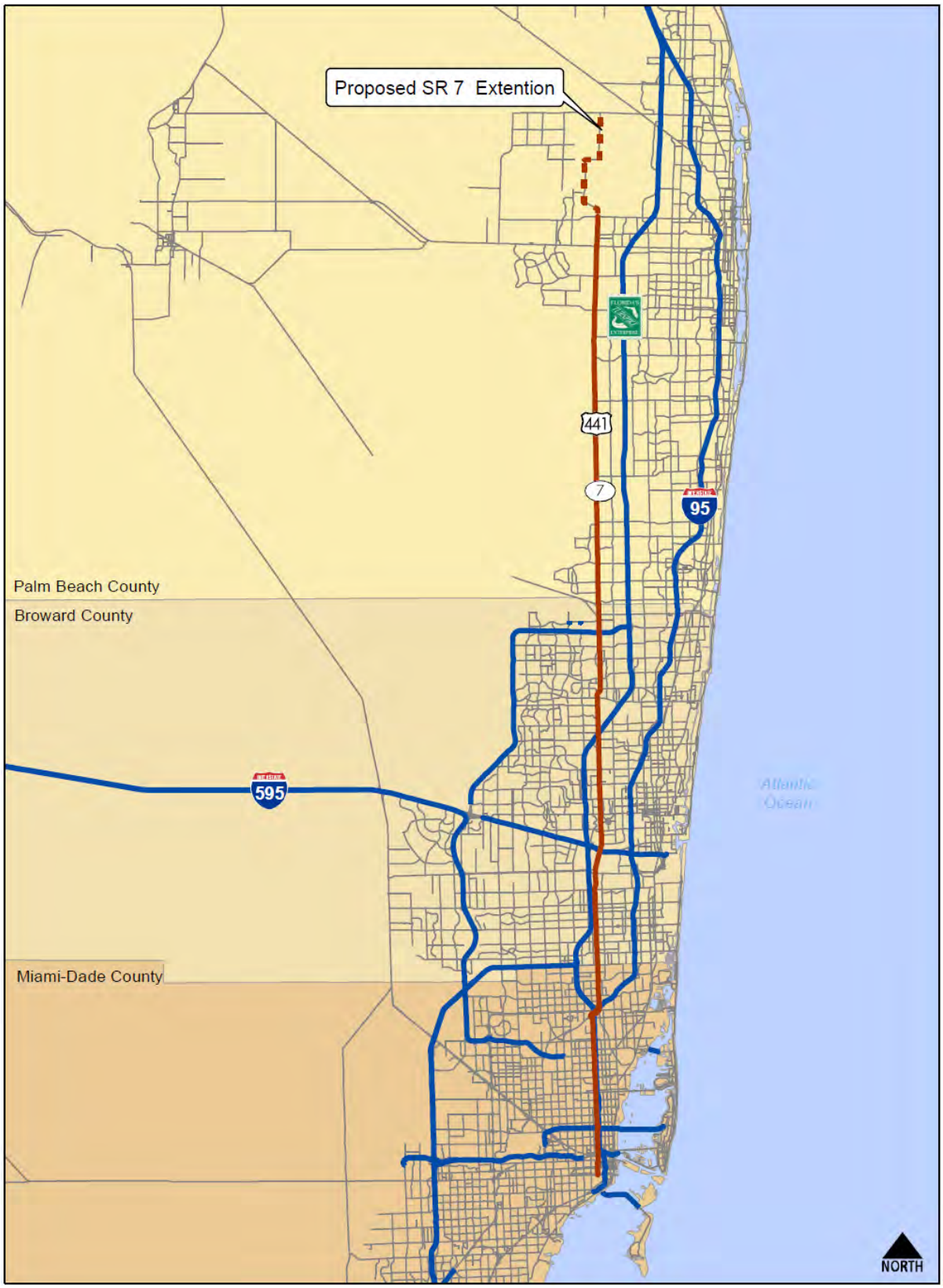

RECOMMENDED ALTERNATIVE

The proposed action includes the widening of the existing County roadway from two to four lanes between Okeechobee Boulevard and 60th Street, construction of a four lane divided facility between 60th Street and the east entrance of the Ibis Golf and Country Club using the West Alignment Alternative, and the widening of the existing County roadway from two to four lanes between the east entrance of the Ibis Golf and Country Club and Northlake Boulevard using the West Alignment Alternative. Under the West Alignment Alternative, the roadway would be located adjacent to the Ibis Golf and Country Club, and the drainage treatment swales would be located between the roadway and the western boundary of the Grassy Waters Preserve. Through extensive coordination with the environmental agencies, Corridor 3 was selected and the West Alignment Alternative was modified after the Public Hearing. It was reduced to minimize impacts to wetlands and natural habitats and increase the buffer between the proposed roadway and Grassy Waters Preserve.

The typical section includes four, 12 foot wide lanes separated by a raised median. A four foot wide bicycle lane and six foot wide sidewalk is proposed along each side. Through extensive coordination with the permitting agencies, the West Alignment Alternative was modified after the Public Hearing to reduce potential impacts to wetlands and natural habitats (see figure below). The median width was reduced from 42 feet to 22 feet, and the drainage treatment swales were re-sized to meet South Florida Water Management District standards plus capacity for 50 percent additional treatment. The combination of this minimization effort reduced the overall typical section from 320 feet wide to 150 feet wide. This leaves approximately 170 feet of right of way between the roadway and the Grassy Waters Preserve untouched; an area equal to approximately 56 acres in size. Impacts to higher quality wetlands adjacent to the Grassy Waters Preserve would be reduced by 90 percent and impacts to existing snail kite habitat would be reduced by 93 percent. Typical sections for the Preferred Alternative are provided within Appendix J of the attached Environmental Assessment.

The crossing over the M-Canal within FDOT right of way was modified after the Public Hearing to reduce the amount of encroachment into the Pond Cypress Natural Area. The design speed for the curve across the bridge was reduced from 45 MPH to 40 MPH. This results in 1.23 acres of encroachment as opposed to 7.3 acres for the straight bridge crossing. This option also avoids the portion of the M-Canal owned by the City of West Palm Beach. The section of the M-Canal owned by the City of West Palm Beach is protected under a Special Act by the Florida Legislature (Chapter 67-2169). The design speed for the segments north and south of the M-Canal crossing would remain at 45 MPH.

Original Typical Section – Adjacent to Grassy Waters Preserve

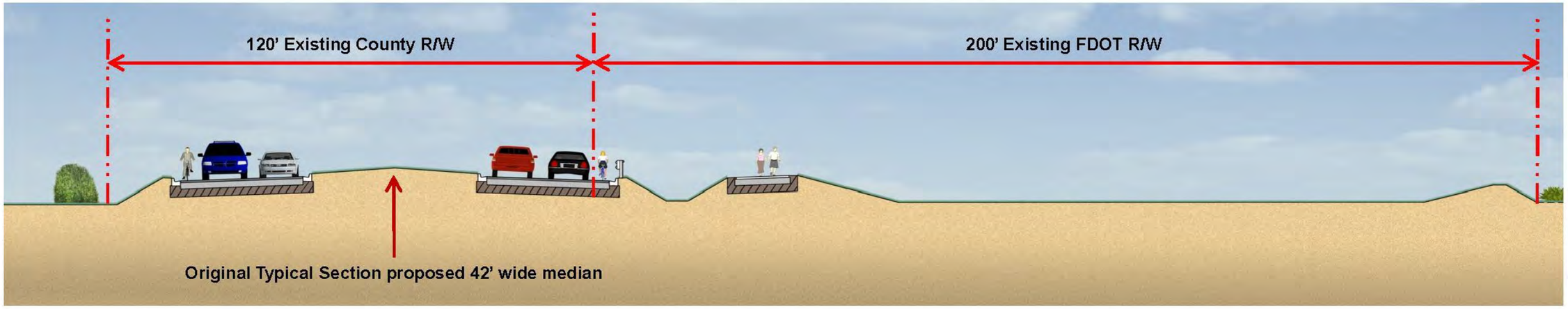

Reduced Typical Section – Adjacent to Grassy Waters Preserve

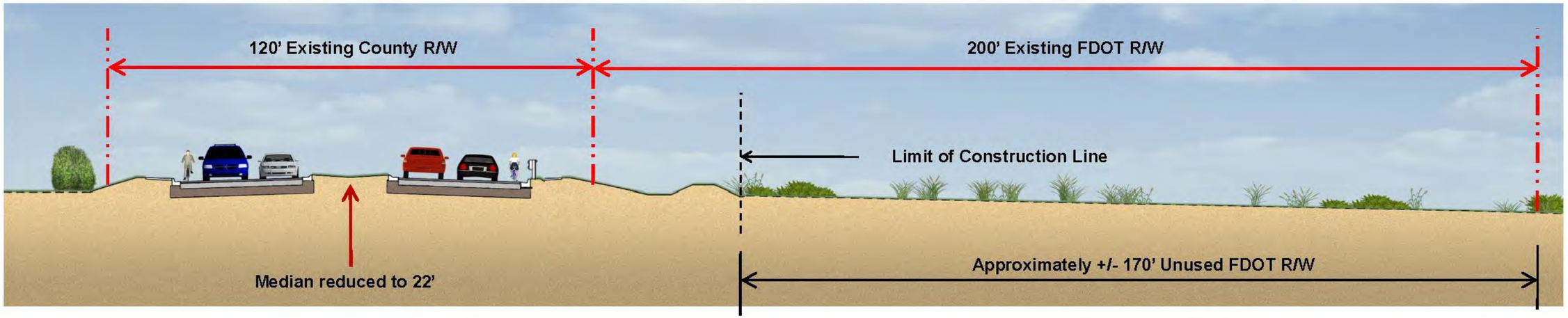

The proposed action includes the at-grade intersection option for the intersection at Okeechobee Boulevard. The findings of the traffic study indicate that the intersection will reach capacity by 2030 regardless if the extension is constructed or not. This implies that the performance at the intersection is not directly related to the proposed extension, but rather due to heavy demands along Okeechobee Boulevard. A grade separated interchange would result in additional impacts to the surrounding community and should be studied as a separate project. This approach was discussed with FHWA during a meeting on December 16, 2010. A grade separated interchange at SR 7 and Okeechobee Boulevard is already identified by the Palm Beach MPO in its Long Range Transportation Plan (LRTP). A roundabout is preferred for the intersections at 60th Street and the entrance to the Ibis Golf and Country Club. The Ibis Golf and Country Club passed a resolution on December 11, 2009 in favor of the roundabout option if the project was approved.

Coordination will continue during the design and construction phases of this project with the public in general, state and federal permitting agencies, and adjacent cities and local jurisdictions who have expressed interest in this project such as Palm Beach County, City of West Palm Beach, Village of Royal Palm Beach, and the Indian Trail Improvement District to address any other issues that may arise.

RELOCATION AND RIGHT OF WAY

Proposed improvements are generally located within existing right of way reserved for transportation purposes. No displacements or relocations are proposed. However, two property impacts would result and they include 1.35 acres to an AM tower site located along the M-Canal and 1.23 acres to the northeast corner of the Pond Cypress Natural Area.

The AM tower site is owned and maintained by the American Tower Corporation and impacts to this property are estimated at $983,095. There are five AM towers within the property. Radiating from each tower are underground wires that are critical for the operation of the AM signal. The Preferred Alternative would encroach within this radial field. Through coordination with American Tower Corporation, these underground wires would be monitored and adjusted during construction to avoid impacts to the tower operation. Further coordination would be needed during the design phase of the project.

The Pond Cypress Natural Area is owned and maintained by Palm Beach County. Minimal encroachment is necessary to provide a safe crossing over the M-Canal and extensive coordination has been on-going with the County. The Palm Beach County Board of County Commissioners passed a resolution on October 16, 2012 in favor of the project and stating that they have no objection to the proposed encroachment provided that the Conservation Lands Protection Ordinance is satisfied. Through coordination with County staff, the proposed mitigation option includes the donation of the FDOT's Rangeline property north of PGA Blvd. Preserving all or part of this right of

way for conservation purposes is the preferred option for the County given that the property bifurcates the Loxahatchee Slough.

In addition to Palm Beach County, coordination with the US Army Corps of Engineers (USACE) was required with regard to the Pond Cypress Natural Area. The Pond Cypress Natural Area is considered a compensatory mitigation site by USACE as part of the County's two lane extension of SR 7. The USACE stated in letters dated May 27, 2010 and April 2, 2012 that there would be a high potential that USACE would not authorize any impacts to an existing compensatory mitigation site unless it was in the public's interest. In response to USACE's statement that this project will need to be in the public's interest, the benefits of extending SR 7, in conjunction with the proposed mitigation plan, would more than offset the impacts as follows:

- The extension of SR 7 would benefit the quality of life for area residents as it would enhance regional connectivity and reduce travel times. An efficient roadway network also improves air quality as vehicles spend less time idling at intersections.

- FDOT is committed to transferring ownership of the Rangeline right of way between Okeechobee Boulevard and the M-Canal, an area approximately 82 acres in size. Preserving this section of right of way is in the public's interest as it would maintain the wildlife connectivity between the Pond Cypress Natural Area and Grassy Waters Preserve.

- FDOT is committed to preserving an approximate 170 foot wide buffer between the limit of construction line and western boundary of the Grassy Waters Preserve, an area approximately 56 acres in size. Preserving this area of right of way is in the public's interest as it would create a buffer for the Grassy Waters Preserve. This, in combination with the reduced median width, would prohibit any widening in the future.

- FDOT is committed to transferring ownership of the Rangeline right of way between Northlake Boulevard and SR 710, an area approximately 44 acres in size, to Palm Beach County for conservation. Preserving this area of right of way is in the public's interest as this section of right of way is located between the Loxahatchee Slough and Grassy Waters Preserve and would protect it from future development while maintaining the hydrologic connection.

- FDOT is committed to transferring ownership of the Rangeline right of way between SR 710 to Jupiter Farms, an area approximately 90 acres in size, to Palm Beach County for conservation. This section of right of way bifurcates the Loxahatchee Slough. Preserving this section of right of way for conservation purposes is in the public's interest as it would protect the Loxahatchee Slough from any future extension north of SR 710 and maintain its hydrologic connection.

- The donation of the Rangeline properties listed above is in the public's interest as it would increase the amount of public lands in the area available for

conservation and other purposes consistent with the management plans of the adjacent preserves.

Follow-up coordination meetings with the USACE were held in August 13, 2013 and in November 25, 2014 (minutes are provided in the Appendix E of the EA). During these meetings, USACE stated that the permit application would need to include additional documentation supporting why the corridors to the west were eliminated. Since then, FDOT prepared a Corridor Addendum that analyzed these corridors. The addendum concludes that these corridors would result in significant impacts involving numerous property and residential impacts and that none of the western corridors are acceptable alternatives to Corridor 3. During the meeting held on November 24, 2014, USACE acknowledged the mitigation plan prepared for this project, including mitigation for the Pond Cypress Natural Area. In addition, they explained that final comments and acceptance to the proposed impacts and mitigation plan will be provided during the permit application process. FDOT agreed that additional coordination will occur as the project moves closer to permitting.

CULTURAL RESOURCES

FHWA, in compliance with Section 106 of the National Historical Preservation Act and in consultation with the State Historic Preservation Officer, has determined the proposed action will have no effect upon any properties protected under Section 106.

SECTION 4(f) RESOURCES

The proposed action would result in the minor encroachment of the Pond Cypress Natural Area. The Pond Cypress Natural Area, a 1,736 acre preserve, is owned and maintained by Palm Beach County. The encroachment area is 1.23 acres of land located in the northeast corner of the property. The encroachment is necessary to avoid a portion of the M-Canal which is protected under a Special Act by the Florida Legislature (Chapter 67-2169). Section 2 of the act states that "It shall be mandatory that the City of West Palm Beach retain in perpetuity full ownership and control, without lease entailment of any nature, the water catchment area primarily for a public water supply area and for other uses by the public not inconsistent with water supply." A later amendment (Chapter 2006-359) provided the same protection to the portion of the M-Canal owned by the City of West Palm Beach, but allows the City to grant a license permitting the construction of a crossing over the canal provided that the crossing is not inconsistent with the act or applicable laws and regulations governing Class I potable water supplies and the water catchment area. In addition, transferring ownership of the City's section of the M-Canal would require a modification to the State law because the original State law and subsequent amendment specifically excludes the FDOT's right-of-way over the M-Canal. Lastly, the City's opposition to the project is on record and they have indicated that any crossing over the City's portion of the M-Canal would require an eminent domain proceeding.

There are no prudent and feasible alternatives to the use of the Pond Cypress Natural Area, and all efforts to minimize this impact have been made by lowering the design

speed from 45 MPH to 40 MPH through this area and reducing the median width from 42 feet to 22 feet. Through this effort, impacts were reduced by 83% from 7.3 acres to 1.23 acres.

Coordination with Palm Beach County occurred to ensure that the proposed project would not jeopardize the function, characteristics, or attributes of the Pond Cypress Natural Area. As a result, the Palm Beach County Board of County Commissioners approved a resolution on October 16, 2012 stating its support for the project and that they have no objection to the proposed 1.23 acre encroachment of the Pond Cypress Natural Area provided that the Conservation Lands Protection Ordinance is satisfied. In order to compensate for impacts within the Pond Cypress Natural Area and satisfy the County's Conservation Lands Protection Ordinance, an estimated 23-acre area of the FDOT-owned Rangeline property between PGA Boulevard and Jupiter Farms will be transferred to County ownership.

Public comments with regard to the effects on the protected activities, features, or attributes of the Pond Cypress Natural Area were solicited during the Public Hearing on March 21, 2012. Information with regard to this issue was provided on a display board and discussed during the formal presentation. A Copy of the display board is provided within Appendix K of the Environmental Assessment. Additional information is provided within Section 4.9.1 of the Environmental Assessment. No comments from the public were received.

Based on that no other practicable alternative exists, the effort to reduce the encroachment area, the minor amount of land being taken, and the support received from the Palm Beach County Board of County Commissioners and Palm Beach County Department of Environmental Resources Management, the proposed encroachment into the Pond Cypress Natural Area is considered a *de minimis* use. By signing this FONSI, FHWA concurs with the *de minimis* finding.

AIR QUALITY

The project corridor is located in an area which is designated as attainment for all of the National Ambient Air Quality Standards under the criteria provided in the Clean Air Act. Therefore, the Clean Air Act conformity requirements do not apply to the project.

The project alternatives were subjected to a Carbon Monoxide (CO) screening model that considers various conservative worst-case assumptions related to site conditions, meteorology, and traffic. The FDOT's screening model, CO Florida 2012 (released January 9, 2012) uses the latest US Environmental Protection Agency approved software (MOVES and CAL3QHC) to produce estimates of one-hour and eight-hour Carbon Monoxide at default air quality receptor locations. Based on the results from the screening model, the highest project-related Carbon Monoxide one-hour and eight-hour levels are not predicted to meet or exceed the one-hour or eight-hour National Ambient Air Quality Standards for this pollutant with either the No-Build or Build Alternatives. Therefore, the project passes the screening model.

This assessment does not incorporate an analysis of the Green House Gasses (GHG) emissions or climate change effects of each of the alternatives because the potential change in GHG emissions is very small in the context of the affected environment. Because of the insignificance of the GHG impacts, those local impacts will not be meaningful to a decision on the environmentally preferable alternative or to a choice among alternatives. For these reasons, no alternatives-level GHG analysis has been performed for this project.

NOISE

The 66 dBA threshold for noise abatement under Noise Abatement Criteria (NAC) category B (residential) will be exceeded for 17 receptors within the Baywinds community, located just north of Okeechobee Boulevard, and for 24 receptors within the Amli Apartments, located south of Northlake Boulevard.

A noise barrier wall was analyzed to determine if it could effectively reduce the traffic noise level at the impacted receptors within Baywinds and the Amli Apartments and if the cost of doing so was reasonable given the number of residences predicted for the noise barrier to protect.

For the Baywinds community, the noise barrier analysis shows that a barrier of 16 feet in height would be reasonable and would achieve the greatest number of receptors receiving a noise reduction of at least 5 dBA. The proposed barrier is approximately 1,539 feet in length and 16 feet in height. The number of benefited receptors receiving an insertion loss of 5 dBA or more is 57, resulting in an average cost per receptor of $12,960. Since this cost is well below the upper limit of $42,000, the barrier would be cost feasible.

For the Amli Apartments, the noise barrier analysis shows that a barrier of 20 feet in height would be reasonable and would achieve the greatest number of receptors receiving a noise reduction of at least 5 dBA. The proposed barrier is approximately 851 feet in length and 20 feet in height. The number of benefited receptors receiving an insertion loss of 5 dBA or more is 19, resulting in an average cost per receptor of $26,863. Since this cost is well below the upper limit of $42,000, the barrier would be cost feasible.

Community input during the design phase would be required to determine their desire for the construction of the noise barrier. In addition, a detailed noise analysis may be required during the final design process to further analyze the need for a noise barrier—as well as the specific height and length that should be constructed—based upon the ultimate design of the roadway.

FLOODPLAIN FINDING

Pursuant to Executive Order 11988 "Floodplain Management," the proposed action was determined to be outside of the floodplain and therefore have no floodplain encroachments. The project does not involve any regulatory floodways.

WETLANDS FINDING

In accordance with EO 11990 (Protection of Wetlands), wetlands were given special consideration during the development and evaluation of alternatives. At the time of the Public Hearing, all of the Build Alternatives involved full use of the available right of way resulting in approximately 114.5 acres of wetland impact. After the Public Hearing and through coordination with the permitting agencies, the West Alignment Alternative was selected and modified to minimize impacts to wetlands and natural habitats. Avoidance and minimization measures include reduction of the median width from 42 to 22 feet, reduction in the size of drainage treatment areas (through coordination with the South Florida Water Management District), the use of retained earth walls where feasible, removal of the shared used path on the east side of the roadway (replaced by sidewalk), and modifications to the crossing of the M-Canal to reduce encroachment into the Pond Cypress Natural Area. The combination of this minimization effort reduced the overall typical section from 320 feet wide to 150 feet wide. This leaves approximately 170 feet of right of way between the roadway and the Grassy Waters Preserve untouched, an area equal to approximately 56 acres in size. Although potential wetland impacts were reduced by 54 percent, the Preferred Alternative would unavoidably impact 52.9 acres.

Of the 52.9 acres of wetlands impacted, 19.6 acres are classified as native freshwater marshes and hydric pine, 28.6 acres are considered to be exotic dominated, and 5.0 acres are classified as vegetated ditches and channelized canals. Compared to the original typical section presented at the time of the Public Hearing, the proposed action provides for the greatest reduction in wetland impact with regard to native-dominated higher quality marshes (87% reduction north of the M-Canal) and hydric pine (92% reduction north of the M-Canal).

Secondary wetland impacts were calculated in 50 foot increments within the 300 foot buffer of direct wetland impacts. Approximately 27.8 acres of secondary wetland impact is associated with the 0-50 foot increment and approximately 127.3 acres of secondary wetland impact is associated with the 50-300 foot increment.

The Uniform Mitigation Assessment Method (UMAM) functional loss per acre for individual wetland classification types ranged from 0.47 units (for palustrine scrub-shrub wetlands dominated by exotic/nuisance vegetation located north of the M-Canal) to 0.83 units (for native-dominated palustrine, forested pine wetlands located south of the M-Canal). The Preferred Alternative would amount to 34.1 units of direct functional loss and 21.7 units of secondary functional loss. Additional details related to wetland impacts are provided within the Wetland Evaluation Report provided under separate cover.

FDOT is committed to providing mitigation to compensate for unavoidable wetland impacts and has evaluated various on- and off-site mitigation options that will provide the best solution in terms of the complex wetland habitat assemblages. Part of FDOT's mitigation plan is to enhance, restore, and preserve the remaining Rangeline right of way adjacent to the Grassy Waters Preserve and apply a conservation easement for

the unused portion of the right of way. This would prevent any future roadway widening to the outside and provide additional habitat for listed species in the area. Key elements of the Conceptual Mitigation Plan, provided within Appendix I of the Environmental Assessment, include off-site mitigation via the Pine Glades North Permittee Responsible Offsite Mitigation Area (PROMA) and on-site mitigation via wetland restoration, enhancement, and preservation within the un-used portion of the FDOT right of way between the M-Canal and Northlake Boulevard. Coordination with the permitting agencies is on-going and will continue into the design phase.

Below are key elements of the wetland mitigation plan:

- The estimated 10.1 acres of direct herbaceous wetland impacts and 25.6 acres of direct forested wetland impact located within the portion of the County-owned right of way will be mitigated at the Pine Glades North PROMA.

- The estimated 14.5 units of functional loss resulting from secondary impacts attributed to proposed construction within the County-owned right of way will be mitigated at the Pine Glades North PROMA.

- The estimated 5.8 acres of direct herbaceous wetland impacts and 10.8 acres of direct forested wetland impact located within the FDOT right of way will be mitigated through on-site mitigation via wetland restoration, enhancement, and preservation within the easternmost 56 acres of un-used FDOT right of way between the M-Canal and Northlake Boulevard. The restoration of the un-used right of way adjacent to the Grassy Waters Preserve would create additional habitat for the listed species common to the project area. These restored wetlands would be monitored for listed species usage

- The estimated 3.4 units of functional loss resulting from secondary herbaceous marsh impacts attributed to proposed construction within the FDOT right of way will be mitigated through the Dupuis Reserve PROMA.

- The estimated 2.7 units of functional loss resulting from secondary forested wetland impacts attributed to proposed construction within the FDOT right of way will be mitigated through on-site mitigation via wetland restoration, enhancement, and preservation within the easternmost 56 acres of un-used FDOT right of way between the M-Canal and Northlake Boulevard. The restoration of the un-used right of way adjacent to the Grassy Waters Preserve would create additional habitat for the listed species common to the project area.

- The estimated 0.16 acres of direct herbaceous marsh impacts and 0.43 acres of direct forested wetland impact located within the Section 1 Mitigation Area will be mitigated through on-site mitigation via wetland restoration, enhancement, and preservation within the un-used FDOT right of way between the M-Canal and Northlake Boulevard.

Based upon the above considerations, it is determined that there are no practicable alternatives to the proposed construction in wetlands and that the proposed action includes all practicable measures to minimize harm to the wetlands, which may result from such use.

WATER QUALITY

The project lies within the designated boundaries of the Biscayne Aquifer. A Sole Source Aquifer Review was conducted by the US Environmental Protection Agency to determine if the project poses potential adverse health or environmental impacts. The US Environmental Protection Agency determined that the project is not expected to cause significant impact to the aquifer system.

The proposed storm water facility design would include, at a minimum, the water quality design requirements for water quality impacts as required by the South Florida Water Management District in Rules 40E-4, 40E-40, and 40E-400. No impacts to water quality are anticipated.

Both the M-Canal and Grassy Waters Preserve are designated Class 1 Waters. A bridge over the M-Canal would be required as part of this project. This bridge will be constructed within existing FDOT right of way. The M-Canal conveys water from the Grassy Waters Preserve to Lake Mangonia and Clear Lake. Both lakes are bounded by Interstate 95 (I-95) to the west and Australian Avenue to the east and spanned by Okeechobee Boulevard and Palm Beach Lakes Boulevard. The City's water treatment plant is located off of Clear Lake.

Over the course of the PD&E Study, the public has raised concerns regarding the potential contamination of the Grassy Waters Preserve due to an accident involving a truck carrying petroleum products or hazardous materials. The primary concern is that the 12,800 acre Preserve provides fresh drinking water to over 130,000 people in West Palm Beach and surrounding areas. In response, the proposed action includes several features to moderate such an emergency. These include a curb and gutter system with an urban drainage collection system, guardrail along the eastern edge of the roadway, and a swale between the roadway and the boundary of the Grassy Waters Preserve.

The guardrail, in combination with the curb and gutter, would help contain vehicles within the roadway in the event of an accident. Any material spilled on the roadway, if large enough, may enter the nearest drainage inlet where it may collect or outfall into the drainage swale. The contaminated material and soil from the swale would then be removed from the site in accordance with local, state, and federal response procedures. No direct outfall between the drainage system and the Grassy Waters Preserve is proposed.

For the bridge crossing over the M-Canal, the FDOT proposes a 54-inch high concrete barrier wall. Most barrier walls for this type of application are only 32 inches high. In addition, the joints on the bridge would be sealed using a poured joint with backer rod

expansion system. This would help retain any contaminated materials on the bridge deck and away from the M-Canal.

WILDLIFE AND HABITAT

The proposed wetland creation and enhancement activities in the un-used portion of the FDOT right of way between the M-Canal and Northlake Boulevard will enhance wildlife utilization by increasing foraging habitat for wading birds, potentially increasing the amount of deep water refugia, and enhancing foraging/nesting habitat by reducing the coverage of thick exotic vegetation currently occurring on the berms which offer limited utilization for wildlife. Removal of the existing berms and creating wetlands in their place will improve connectivity for aquatic wildlife. In addition, wildlife crossings at the M-Canal and at the Ibis Mitigation Area outfall structure are part of the proposed action to increase wildlife connectivity between the surrounding natural areas.

Based upon the assessment detailed in the Endangered Species Biological Assessment prepared for this project, ongoing agency coordination, and commitments made by FDOT, the proposed project would have *no effect* on the Florida panther, crested caracara, Florida scrub jay, red-cockaded woodpecker, least tern, bald eagle, other wetland dependent birds, gopher tortoise, Florida pine snake, Florida mouse, and state listed plant species.

The proposed project *may affect, but is not likely to adversely affect* the eastern indigo snake and wood stork. The US Fish and Wildlife Service (USFWS) concurred with the effect determination for the eastern indigo snake in a letter dated February 29, 2012. Concurrence for the wood stork was provided through a Biological Opinion dated November 13, 2014.

An endangered species, the Everglade snail kite, has been observed in the vicinity of the proposed action. The snail kite is a medium-sized hawk listed as endangered by both USFWS and the Florida Fish and Wildlife Conservation Commission. Snail kites have been previously documented over several years within natural areas located to the east of the proposed project. The USFWS Snail Kite Management Guidelines (2006) outline Priority Management Areas for the snail kite. These areas are located to the east of the project right of way, with the closest area being approximately 4,605 feet to the east of the eastern FDOT right of way boundary. These management areas coincide with long-term nesting locations. Priority Management Areas are determined based upon the current nesting season combined with ten prior years of continual nesting data being collected for a given locality.

The USFWS conducts annual snail kite nest surveys throughout Grassy Waters Preserve. In 2010, USFWS surveys identified one nest within 530 feet from the eastern right of way line. In 2011, three snail kite nests were documented in an area of open marshes located between 162 feet and 574 feet from the eastern right of way line. The closest nest observed in 2012 and 2013 was over a mile away from the project corridor. In addition, the FDOT conducted its own snail kite surveys during the nesting season in 2012, 2013,

and 2014. In 2012, the nearest snail kite observed was approximately 500 feet from the right of way. In 2013, no snail kites were observed in the project area. In 2014, the nearest snail kite observed was approximately 350 feet from the right of way. No nests were observed within or near the eastern right of way line. No nests have been documented within the FDOT right of way or within the proposed limits of construction. The FDOT commits to continue annual monitoring for snail kite during the design and construction phases of the project.

Based on a Biological Opinion dated November 13, 2014, the USFWS finds that the construction and operation of the proposed action is not likely to jeopardize the continued existence of the snail kite. The proposed project is located outside of critical habitat designated for the snail kite. A copy of the Biological Opinion is provided within the Endangered Species Biological Assessment report.

In the Biological Opinion referenced above, the USFWS expressed concern that the operation of the roadway increases the likelihood of injuries and mortalities to snail kites resulting from collisions with motor vehicles. As part of the restoration, enhancement, and preservation within the easternmost 56 acres of un-used FDOT right of way between the M-Canal and Northlake Boulevard, mature trees will be planted along the edge of right of way so that snail kites or any other birds will be forced to fly over the roadway and not into oncoming traffic. This would decrease the likelihood of injuries and mortalities to snail kites.

Extensive coordination and correspondence has occurred between the FDOT and USFWS throughout the study. Through these coordination efforts with USFWS and other permitting agencies, the West Alignment Alternative was modified and identified as the Preferred Alternative to minimize impacts to wetlands and natural habitats. This includes a 93% reduction of potential impacts to snail kite habitat.

Wetlands impacted by the proposed construction may be used as foraging habitat by wood storks and other listed wading birds. For potential wetland impacts greater than five acres within the core foraging area of a wood stork colony, the USFWS South Florida Ecological Service requires the calculation of wood stork prey biomass lost for impacted wetlands and also prey biomass gained for wetlands utilized as compensation. The wood stork prey biomass within the impacted footprint is approximately 136.5 kilograms. The wetlands utilized for compensation should be within the core foraging area of the affected wood stork colony and should be of similar hydroperiod. While mitigation for wetland impacts also mitigates for foraging habitat loss for wood storks and other listed wading birds, there are times when additional mitigation is needed to ensure that hydroperiods and biomass are fully replaced.

For unavoidable impacts, The FDOT has prepared a Conceptual Mitigation Plan (Appendix I) that outlines a detailed strategy to offset any direct and indirect impacts to the snail kite and other listed species. Wetland impacts to habitats potentially utilized by the wood stork will be mitigated for at the Pine Glades North PROMA. The Pine Glades North site currently has 540.4 kg of Class 6 and 7 long hydroperiod wood stork biomass credits available. Therefore, the Pine Glades site has more than enough wood

stork foraging biomass credits to meet the needs of this project. In addition, the site contains many deep water features with shallow-sloped banks, which is the wood stork's preferred foraging habitat. County biologists commonly report sightings of wood storks utilizing the Pine Glades North site.

Prior to construction, a management and protection plan will be implemented in accordance with the Snail Kite Management Guidelines published by the US Fish and Wildlife Service. Other elements of this plan include a commitment to transfer ownership of the Rangeline properties from Okeechobee Boulevard to the M-Canal and Northlake Boulevard to Jupiter Farms to Palm Beach County's Environmental Resource Management for conservation. This amounts to approximately 216 acres that would be set aside for conservation and preservation. Construction of the project will not begin until the ownership of these parcels has been transferred and are protected in perpetuity by conservation easement(s) with USFWS listed as having third party rights to enforce the easement(s) and enjoin activities that are not related to conservation. A copy of the signed conservation easement(s) will be provided to USFWS prior to construction. Construction will not begin until USFWS has acknowledged receipt of the signed conservation easement with third party rights.

In addition, an endowment fund of at least $255,617.40 for the long-term maintenance and management of the Rangeline properties will be established. The endowment fund will be placed into an account created by the Palm Beach County Board of County Commissioners that specifically mandates that the funds will be used only for activities related to maintenance and management of the donated Rangeline properties, and the account will be managed by Palm Beach County's Environmental Resources Management. A letter showing proof of the endowment fund will be provided to USFWS. Construction will not begin until USFWS has acknowledged receipt of the letter showing proof of the endowment fund. Additional details are provided within the Conceptual Mitigation Plan.

ESSENTIAL FISH HABITAT

This project is not located within, and/or will not adversely affect areas identified as Essential Fish Habitat; therefore, an Essential Fish Habitat consultation is not required.

FARMLANDS

No farmlands are located within the study area. It is expected that the project area which is located in the urbanized area of Palm Beach County does not meet the definition of farmland as defined in 7 CFR 658. Therefore, the provisions of the Farmland Protection Policy Act of 1984 do not apply to this project.

COASTAL ZONE CONSISTENCY

The Department of Environmental Protection has determined that this project is consistent with the Florida Coastal Management Program.

PUBLIC INVOLVEMENT

A public involvement program was conducted during the course of the study. The Environmental Assessment was approved for public availability on January 25, 2012 and the Public Hearing was held on March 21, 2012.

The Public Hearing was held to give the public an opportunity to express their views regarding the specific location, design, socio-economic effects, and environmental impacts associated with the alternatives considered. Several methods were used to notify the public about the Hearing. Approximately 2,915 invitations were mailed to residents, business owners, and elected and agency officials. In addition, advertisements were placed in the Florida Administrative Weekly and Palm Beach Post.

Seven hundred fifty-nine people attended the Hearing. Prior to the formal proceedings, members of the project team, including FDOT representatives and its consultants, were available to informally discuss the project and answer any questions. Various stations with display boards were setup and made available for viewing. One station provided an illustration of the alternatives considered. Others discussed noise, wetland, wildlife, and Section 4(f) impacts. Another station discussed contamination avoidance of the Grassy Waters Preserve and a member of the Palm Beach County hazmat response team was available to discuss the County's response procedures for hazardous material spills. Informational handouts and comment forms were also offered to attendees. The informal, "open house" portion of the Hearing began at 5:30 PM and formal proceedings began at 6:30 PM.

During the formal presentation, a voiced-over PowerPoint presentation of the project and the resulting analyses was shown. This presentation included a summary of the need for the facility and the advantages and disadvantages of the viable alternatives, including the No-Build Alternative. Socio-economic and environmental impacts were also presented. The next portion of the Public Hearing was devoted to the public comment period. Sixty-one individuals spoke for the public record at the Hearing. Of the 61 public statements made, 33 were supportive of the project, 18 were opposed, and 10 were neutral or did not express a view. Two court reporters were present at the Hearing to obtain comments before, during, and after the Public Hearing presentation. The Public Hearing concluded at shortly after 9 PM.

During the Public Hearing comment period, 5,093 written comments were received. The majority of the comments (61 %) showed support for the project and demonstrates that most in the community have a desire for improved access and system linkage. Other reasons for showing support include safety, hurricane evacuation, and relieving traffic within the Acreage and Village of Royal Palm Beach. Palm Beach County, Village of Royal Palm Beach, Indian Trails Improvement District (representing the Acreage community), Western Communities Council, and the Central Palm Beach County Chamber of Commerce are all on record for supporting the project. The City of West Palm Beach and the Ibis Golf Country Club do not support the project. Those in opposition cited concern for the drinking water supply, environmental issues (wildlife and habitat), project cost, and lack of project need.

Following the Public Hearing, comments were received from the City of West Palm Beach and US Army Corps of Engineers to evaluate additional corridors to the west. In response, the FDOT conducted an evaluation of five alternative alignments within two corridors; three alternative alignments along 130th Avenue North and two alternative alignments along 140th Avenue North. The results of this study are documented within a Corridor Report Addendum prepared under separate cover and conclude that these corridors would result in significant impacts involving numerous property and residential impacts. None of the five alternatives are acceptable replacements for the Preferred Alternative as described in the sections above.

STATEMENT OF PUBLIC AVAILABILITY

The approved Environmental Assessment addresses all of the viable alternatives that were studied during project development. The environmental effects of all alternatives under consideration were evaluated when preparing the assessment. Even though the document was made available to the public before the Public Hearing, the Finding of No Significant Impact was made after consideration of all comments received as a result of public availability and the Public Hearing.

Environmental Assessment

SR 7 Extension Project Development and Environment (PD&E) Study
From SR 704 (Okeechobee Boulevard) to CR 809A (Northlake Boulevard)
MP 0.000 to MP 8.536
Palm Beach County, Florida
Financial Project ID No. 229664-2-22-01
Federal Aid Project No. 4752-030-P
ETDM No. 8127

Florida Department of Transportation
District 4
December 2014

Federal Highway Administration
Florida Division

ADMINISTRATIVE ACTION

ENVIRONMENTAL ASSESSMENT/SECTION 4(f) *DE MINIMIS*

U.S. Department of Transportation

Federal Highway Administration

and

Florida Department of Transportation

Financial Project Number: 229664-2-22-01
Federal Project Number: 4752-030-P
Efficient Transportation Decision Making (ETDM) No. 8127

SR 7 from SR 704 (Okeechobee Boulevard) to CR 809A (Northlake Boulevard)
Milepost (MP) 0.000 to MP 8.536
Palm Beach County, Florida

Extend SR 7 to CR 809A (Northlake Boulevard). Includes the widening of SR 7 from two to four lanes from SR 704 (Okeechobee Boulevard) to 60th Street, construction of a four lane divided facility from 60th Street to the east entrance of the Ibis Golf and Country Club, and widening of an existing County roadway from two to four lanes from the east entrance of the Ibis Golf and Country Club to Northlake Boulevard; a bridge crossing of the M-Canal; roundabouts at 60th Street and the entrance to the Ibis Golf and Country Club Community. Project length is 8.5 miles.

Submitted pursuant to 42 U.S.C. 4332 (2)(c)

Approved For Public Availability

_____
Date

Division Administrator
Federal Highway Administration

TABLE OF CONTENTS

List Of Figures vi
List Of Tables V iii
List Of Acronyms ix
EXECUTIVE SUMMARY XI
CHAPTER 1: DESCRIPTION OF PROPOSED ACTION 1
CHAPTER 2: NEED 3
2.1 SYSTEM LINKAGE 3
2.2 TRANSPORTATION DEMAND 3
2.3 FEDERAL, STATE OR LOCAL GOVERNMENT AUTHORITY 3
2.4 SOCIAL DEMANDS OR ECONOMIC DEVELOPMENT 4
2.5 MULTIMODAL INTERRELATIONSHIPS 4
2.6 SAFETY 4
CHAPTER 3: ALTERNATIVES CONSIDERED 5
3.1 CORRIDOR EVALUATION 5
3.1.1 Corridor 1 5
3.1.2 Corridor 2 6
3.1.3 Corridor 3 6
3.1.4 Corridor 4 6
3.1.5 No-Build Alternative 6
3.1.6 Corridor Selection Process 8
3.1.7 Corridor Addendum 12
3.2 ALTERNATIVES EVALUATION 12
3.2.1 No-Build Alternative 12
3.2.2 Transportation Systems Management 13
3.2.3 Alternatives Evaluations 13
3.2.3.1 Segment 1 19
3.2.3.2 Segment 2 24

3.2.3.3 Shared-Use Path Option 40
3.2.3.4 Intersection Options at Okeechobee Boulevard 43
3.2.3.5 Intersection Options at 60th Street 48
3.2.3.6 Intersection Options at the Entrance to Ibis 52
3.2.3.7 M-Canal Crossing Options 55
3.2.3.8 Evaluation Matrix 58
CHAPTER 4: IMPACTS 64
4.1 LAND USE 64
4.1.1 Existing Land Use 64
4.1.2 Future Land Use 67
4.1.3 Land Use Impacts 67
4.2 COMMUNITY COHESION 70
4.2.1 Neighborhoods 70
4.2.2 Commercial Centers 70
4.3 COMMUNITY FACILITIES AND SERVICES 74
4.3.1 Churches and Religious Institutions 74
4.3.2 Schools 74
4.3.3 Daycare Facilities 76
4.3.4 Municipal Facilities 76
4.3.5 Emergency Services 77
4.3.6 Modal Choices 79
4.4 ECONOMIC IMPACTS 83
4.5 ENVIRONMENTAL JUSTICE 83
4.6 LAND ACQUISITION, RELOCATION AND DISPLACEMENT IMPACTS 84
4.7 UTILITIES AND RAILROADS 84
4.8 ARCHAEOLOGICAL AND HISTORICAL 88
4.9 RECREATIONAL/PARKLAND 88
4.9.1 Pond Cypress Natural Area 90
4.9.2 Grassy Waters Preserve 92

4.9.3 Ibis Preserve 94
4.9.4 Loxahatchee Slough Natural Area 94
4.10 VISUAL/AESTHETIC 94
4.11 AIR 95
4.12 NOISE 96
4.13 WETLANDS 101
4.14 WATER QUALITY 104
4.15 CONTAMINATION 105
4.15.1 Existing Identified Contamination 105
4.15.2 Avoiding Possible Contamination of Grassy Water Preserve 107
4.16 WILD AND SCENIC RIVERS 108
4.17 FLOODPLAINS 108
4.18 COASTAL ZONE CONSISTENCY 109
4.19 WILDLIFE AND HABITAT 109
4.20 ESSENTIAL FISH HABITAT 118
4.21 FARMLANDS 118
4.22 CONSTRUCTION 118
CHAPTER 5: COMMENTS AND COORDINATION 120
5.1 COORDINATION WITH AGENCIES AND LOCAL GOVERNMENTS 120
5.1.1 Advance Notification 120
5.1.2 Efficient Transportation Decision Making 121
5.1.3 Elected Officials/Agency Kickoff Meeting 122
5.1.4 Agency Workshop 122
5.1.5 Palm Beach County Delegation Meeting 123
5.1.6 Palm Beach County Board of County Commissioners Workshop 123
5.1.7 Agency Meetings 123
5.2 COMMUNITY OUTREACH 125
5.2.1 Public Kickoff Meeting 125
5.2.2 Corridor Alternatives Workshop 126

5.2.3 Corridor Announcement Meeting 127
5.2.4 Alternatives Workshop 1 128
5.2.5 Alternatives Workshop 2 128
5.2.6 Community Association and Group Meetings 128
5.2.7 Public Hearing 129
5.2.8 Project Newsletters 133
5.2.9 Project Website 133
CHAPTER 6: COMMITMENTS AND RECOMMENDATIONS 134
6.1 COMMITMENTS 134
6.2 RECOMMENDATIONS 137

APPENDICES

Appendix A: Planning Consistency Checklist
Appendix B: Advance Notification Package and Responses
Appendix C: Efficient Transportation Decision Making Summary Report
Appendix D: Correspondence
Appendix E: Coordination Meetings
Appendix F: Alternative Concept Plans
Appendix G: Analysis of Intersection Needs at Okeechobee Boulevard
Appendix H: Existing Right of Way Ownership
Appendix I: Conceptual Mitigation Plan
Appendix J: Typical Section Package for the Preferred Alternative
Appendix K: Materials Supporting a Section 4(f) de minimis Finding
Appendix L: Ibis Golf and Country Club Zoning Resolution
Appendix M: Sociocultural Data Report

LIST OF FIGURES

Figure 1-1: Project Location Map 2
Figure 3-1: Corridors Evaluated 7
Figure 3-2: Existing Intersections and Roadway Facilities 14
Figure 3-3: Existing Two Lane County Facility (Looking North) from Okeechobee Boulevard to Persimmon Boulevard 15
Figure 3-4: Existing Two Lane County Facility (Looking North) from Ibis Entrance to Northlake Boulevard 15
Figure 3-5: Existing Right of Way 17
Figure 3-6: Alternatives Overview 18
Figure 3-7: Existing Typical Section-Okeechobee Boulevard to Madrid Street 21
Figure 3-8: Proposed Typical Section-Okeechobee Boulevard to Madrid Street 21
Figure 3-9: Existing Typical Section - Madrid Street to 40th Street 22
Figure 3-10: Proposed Typical Section – Madrid Street to 40th Street 22
Figure 3-11: Existing Typical Section-Parallel to the Acreage 23
Figure 3-12: Proposed Typical Section-Parallel to the Acreage 23
Figure 3-13: Proposed Typical Section-West Alignment, Parallel to the M-Canal 25
Figure 3-14: Proposed Typical Section-West Alignment, Bridge over M-Canal 25
Figure 3-15: Proposed Typical Section-West Alignment, Parallel to the Ibis Preserve 26
Figure 3-16: Proposed Typical Section-West Alignment, Parallel to Ibis 26
Figure 3-17: AM Tower Site 28
Figure 3-18: T-Intersection at Northlake Boulevard 29
Figure 3-19: Proposed Typical Section-Modified West Alignment, Parallel to Ibis 31
Figure 3-20: Proposed Typical Section-Center Alignment, Parallel to the M-Canal 34
Figure 3-21: Proposed Typical Section-Center Alignment, Bridge over M-Canal 34
Figure 3-22: Proposed Typical Section-Center Alignment, Parallel to the Ibis Preserve ... 35
Figure 3-23: Proposed Typical Section-Center Alignment, Parallel to Ibis 35
Figure 3-24: Proposed Typical Section-East Alignment, Parallel to the M-Canal 38
Figure 3-25: Proposed Typical Section-East Alignment, Bridge over M-Canal 38
Figure 3-26: Proposed Typical Section-East Alignment, Parallel to the Ibis Preserve 39
Figure 3-27: Proposed Typical Section-East Alignment, Parallel to Ibis 39
Figure 3-28: Sidewalk and Shared-Use Path Configuration 41
Figure 3-29: Proposed Roadway with a Shared-Use Path 42

Figure 3-30: Typical Section of Bridge Crossing with a Separate Pedestrian Bridge 42
Figure 3-31: Okeechobee Boulevard with At-Grade Intersection..... 44
Figure 3-32: Okeechobee Boulevard Intersection with Grade Separated Interchange. 46
Figure 3-33: 60th Street Intersection with Roundabout..... 49
Figure 3-34: 60th Street Intersection with Signalized T-Intersection..... 51
Figure 3-35: Ibis Golf and Country Club Entrance with Roundabout..... 53
Figure 3-36: Ibis Golf and Country Club Entrance with Signalized T-Intersection 54
Figure 3-37: M-Canal Skewed Bridge Crossing..... 55
Figure 3-38: M-Canal Straight Bridge Crossing 57
Figure 3-39: M-Canal Straight Bridge Crossing - Modified 58
Figure 4-1: Existing Land Use..... 66
Figure 4-2: Future Land Use 69
Figure 4-3: Neighborhoods..... 71
Figure 4-4: Commercial Centers..... 72
Figure 4-5: Right of Way Needs for the Intersection at Okeechobee Boulevard..... 73
Figure 4-6: Community Facilities 75
Figure 4-7: Fire Rescue and Emergency Medical Services 78
Figure 4-8: Existing Transit Routes 80
Figure 4-9: Existing Pedestrian Facilities..... 81
Figure 4-10: Existing Bicycle Facilities..... 82
Figure 4-11: Existing Conservation and Parkland Sites..... 89
Figure 4-12: Potential Noise Wall along Baywinds Community (All Build Alternatives) 99
Figure 4-13: Potential Noise Wall along the Amli Apartments (West Alignment Alternative - Modified) 100

LIST OF TABLES

Table 3-1: Future 2040 Level of Service at Okeechobee Boulevard 43
Table 3-2: Future 2040 Level of Service at 60th Street 48
Table 3-3: Future 2040 Level of Service at the Entrance to Ibis 52
Table 3-4: Summary Matrix for the Alignment Alternatives 59
Table 3-5: Summary Matrix for the Intersection Options at Okeechobee Boulevard..... 60
Table 3-6: Summary Matrix for the Intersection Options at 60th Street 61
Table 3-7: Summary Matrix for the Intersection Options at the Ibis Entrance 62
Table 3-8: Summary Matrix for the M-Canal Crossing Options 63
Table 4-1: Existing Land Use within Half Mile of the Project Corridor 65
Table 4-2: Future Land Use within Half Mile of the Project Corridor 68
Table 4-3: Environmental Justice Analysis 83
Table 4-4: Existing Utilities within the Project Corridor 86
Table 4-5: Identification of Wetlands from 60th Street to Northlake Boulevard within Existing Right of Way 102
Table 4-6: Potential Contamination Site Ranking 106
Table 5-1: List of Agency Meetings 124
Table 5-2: Public Corridor Ranking Results 127
Table 5-3: List of Community and Group Meetings 129
Table 5-4: Oral and Written Comments Received at SR 7 Extension Public Hearing..... 130

LIST OF ACRONYMS

AN	Advanced Notification
CEQ	Council of Environmental Quality
CFR	Code of Federal Regulations
CRAS	Cultural Resource Assessment Survey
CSER	Contamination Screening Evaluation Report
dBA	Weighted Decibel Scale
DOA	Determination of Applicability
DOS	Department of State
EA	Environmental Assessment
EFH	Essential Fish Habitat
ERM	Environmental Resource Management
ESBA	Endangered Species Biological Assessment
ESF	Emergency Support Functions
EST	Environmental Screening Tool
ETDM	Efficient Transportation Decision Making
FDEP	Florida Department of Environmental Protection
FDHR	Florida Division of Historical Resources
FDOT	Florida Department of Transportation
FEMA	Federal Emergency Management Agency
FFWCC	Florida Fish and Wildlife Conservation Commission
FHWA	Federal Highway Administration
FIRM	Flood Insurance Rate Map
FLUCFCS	Florida Land Use Cover Forms Classification System
FMSF	Florida Master Site File
FS	Florida Statute
FY	Fiscal Year
GIS	Geographic Information System
ITID	Indian Trail Improvement District
LRTP	Long Range Transportation Plan
MOT	Maintenance of Traffic

MPO	Metropolitan Planning Organization
LDCA	Location and Design Concept Acceptance
NEPA	National Environmental Policy Act
NHPA	National Historic Preservation Act
NMFS	National Marine Fisheries Service
NOAA	National Oceanic and Atmospheric Administration
NSA	Noise Study Area
PD&E	Project Development and Environment
SFWMD	South Florida Water Management District
SHPO	State Historic Preservation Officer
SR	State Road
TSM	Transportation Systems Management
UMAM	Uniform Mitigation Assessment Method
USACE	US Army Corps of Engineers
USC	United States Code
USFWS	US Fish and Wildlife Service
WER	Wetlands Evaluation Report

EXECUTIVE SUMMARY

The Florida Department of Transportation (FDOT) is conducting a Project Development and Environment (PD&E) Study for the extension of State Road (SR) 7 north to CR 809A (Northlake Boulevard) in Palm Beach County, Florida. The project includes the widening of an existing County roadway from two to four lanes from SR 704 (Okeechobee Boulevard) to 60th Street, construction of a four lane divided facility from 60th Street to the east entrance of the Ibis Golf and Country Club, and the widening of an existing County roadway from two to four lanes from the east entrance of the Ibis Golf and Country Club to Northlake Boulevard. See **Figure 1-1** for a project location map. The objective of this PD&E Study is to satisfy National Environmental Policy Act (NEPA) procedures in order to receive Location and Design Concept Acceptance (LDCA) from the Federal Highway Administration (FHWA). This report is prepared in accordance with the FDOT PD&E Manual, Part 1, Chapter 6.

The project was first identified in 1969 within the West Palm Beach Urban Transportation Study and the FDOT has been actively working on the extension of SR 7 since the late 1970s through multiple planning and feasibility studies. At the start of the project, the Palm Beach 2030 Long Range Transportation Plan identified the need for six lanes from Okeechobee Boulevard to Madrid Street and four lanes from Madrid Street up to Northlake Boulevard. The current Palm Beach 2035 Long Range Transportation Plan now shows the need for only four lanes throughout the project limits. The project is now consistent with the Palm Beach 2035 Long Range Transportation Plan.

The purpose of the project is to extend SR 7 to the Northlake Boulevard. Currently, the north-south travel network between Okeechobee Boulevard and Northlake Boulevard is limited. The Turnpike is located four miles to the east of SR 7 and Seminole Pratt Whitney Road is located six miles to the west. For residents of the Village of Royal Palm Beach and the Acreage, the primary travel route from Okeechobee Boulevard to Northlake Boulevard includes a combination of Royal Palm Beach Boulevard, Orange Boulevard, and Coconut Boulevard. This route is approximately eight miles long and includes six miles through a two lane undivided facility fronted by residential properties.

Within the project corridor, there are two existing roadway facilities. See **Figure 3-2** for a location map of these facilities. The first facility is a two lane undivided Palm Beach County roadway, designated as SR 7 Extension, from Okeechobee Boulevard to Persimmon Boulevard (3.5 miles). Construction is underway by the County for extending this two lane facility from Persimmon Boulevard to 60th Street. The second facility is a two lane undivided Palm Beach County roadway from the east entrance of the Ibis Golf and Country Club to Northlake Boulevard (0.7 miles). This facility primarily serves as an access road for the Ibis community.

The west side of the project corridor consists of residential areas defined by the Village of Royal Palm Beach, Acreage, and Ibis Golf and Country Club. The east side of the project corridor consists of natural areas and preserves identified as the Pond Cypress Natural Area and Grassy Waters Preserve. The Pond Cypress Natural Area is owned by

Palm Beach County. The Grassy Waters Preserve is owned by the City of West Palm Beach and serves as the City's drinking water supply. There is one existing canal, designated as the M-Canal, which traverses the study area in an east-west direction. A bridge over the M-Canal would be required as part of this project. Both the M-Canal and Grassy Waters Preserve are designated Class 1 Waters. The M-Canal conveys water from the Grassy Waters Preserve to Lake Mangonia and Clear Lake. Both lakes are located east of Interstate 95 (I-95) and just west of Downtown West Palm Beach. The City's water treatment plant is located off of Clear Lake.

Most of the project would be located within an existing transportation corridor preserved for the purpose of extending SR 7. The available right of way within the project corridor includes a 200 foot wide section owned by the FDOT that extends from the intersection of Okeechobee Boulevard and SR 7 and continues directly north to Northlake Boulevard. This section of right of way, commonly referred to as the Rangeline right of way, is adjacent to the western boundary of the Grassy Waters Preserve and has been under FDOT's ownership since the late 1940s. The available right of way along the County's existing two lane roadway varies between 185 and 360 feet. In addition, the County owns a section of right of way along the south bank of the M-Canal that varies between 78 and 367 feet and a 120 foot wide parcel that is located along the east side of the Ibis Golf and Country Club and adjacent to the FDOT's right of way. Existing right of way ownership records are provided within **Appendix H**.

The County's 120 foot wide section of right of way along the east side of the Ibis community was a requirement as part of the Ibis development agreement (**Appendix L**). During the permitting and approval process for Ibis in the late 1980s, the Ibis developer agreed to donate a 120 foot wide section of right of way to the County for the purpose of constructing SR 7. This agreement also included provisions for allowing 46.8 acres of roadway runoff to be treated within the Ibis lake system.

Proposed Action

The proposed action includes the widening of the existing County roadway from two to four lanes between Okeechobee Boulevard and 60th Street, construction of a four lane divided facility between 60th Street and the east entrance of the Ibis Golf and Country Club using the West Alignment Alternative, and the widening of the existing County roadway from two to four lanes between the east entrance of the Ibis Golf and Country Club and Northlake Boulevard using the West Alignment Alternative. Under the West Alignment Alternative, the roadway would be located adjacent to the Ibis Golf and Country Club, and the drainage treatment swales would be located between the roadway and the western boundary of the Grassy Waters Preserve. Through extensive coordination with the environmental agencies, the West Alignment Alternative was modified after the Public Hearing and the footprint was reduced to minimize impacts to wetlands and natural habitats and increase the buffer between the proposed roadway and Grassy Waters Preserve as shown in the following graphic.

Original Typical Section – Adjacent to Grassy Waters Preserve

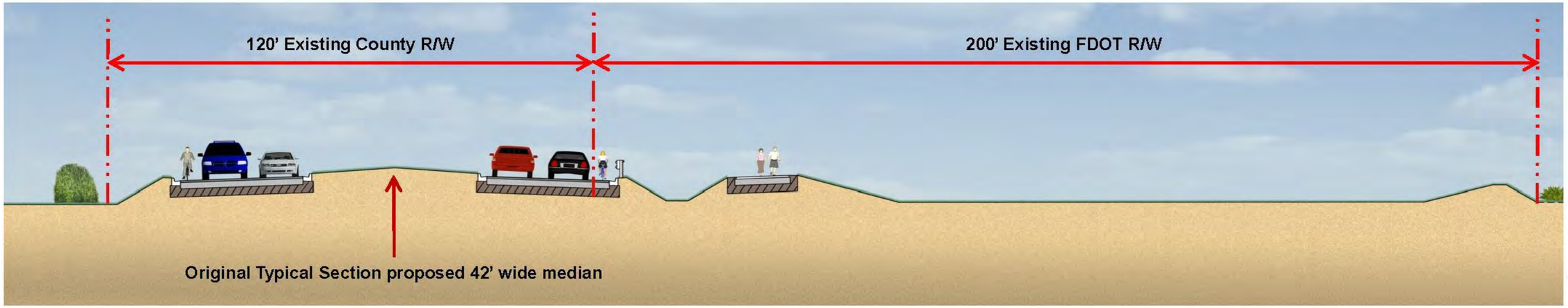

Reduced Typical Section – Adjacent to Grassy Waters Preserve

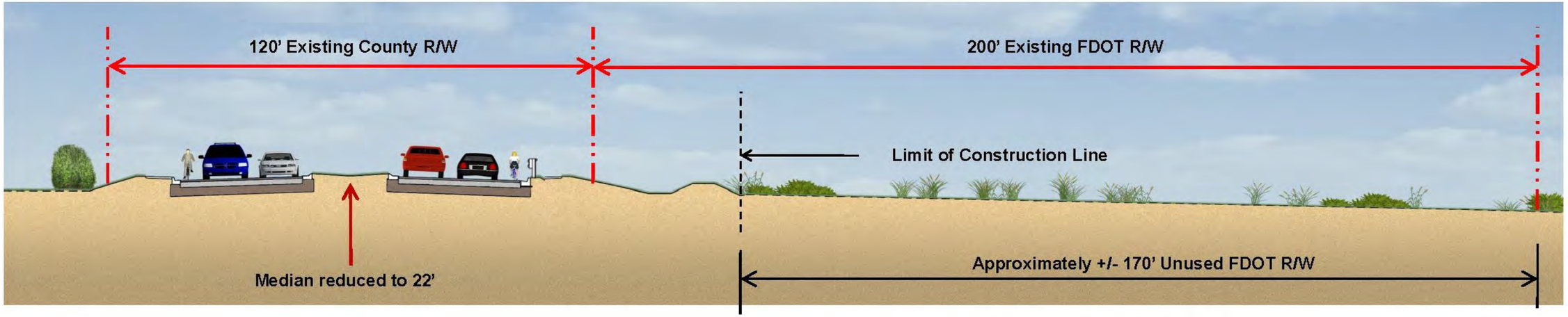

The typical section includes four, 12 foot wide lanes separated by a raised median. A four foot wide bicycle lane and six foot wide sidewalk is proposed along each side. Through extensive coordination with the permitting agencies, the West Alignment Alternative was modified after the Public Hearing to reduce potential impacts to wetlands and natural habitats. The median width was reduced from 42 feet to 22 feet, and the drainage treatment swales were re-sized to meet South Florida Water Management District standards plus capacity for 50 percent additional treatment. The combination of this minimization effort reduced the overall typical section from 320 feet wide to 150 feet wide. This leaves approximately 170 feet of right of way between the roadway and the Grassy Waters Preserve untouched; an area equal to approximately 56 acres in size. Impacts to higher quality wetlands adjacent to the Grassy Waters Preserve would be reduced by 90 percent and impacts to existing snail kite habitat would be reduced by 93 percent. Typical sections for the Preferred Alternative are provided within **Appendix J**.

The Straight Bridge Crossing Option over the M-Canal was modified after the Public Hearing to reduce the amount of encroachment into the Pond Cypress Natural Area. The design speed for the curve across the bridge was reduced from 45 MPH to 40 MPH. This results in 1.23 acres of encroachment as opposed to 7.3 acres for the straight bridge crossing. This option also avoids the portion of the M-Canal owned by the City of West Palm Beach. The section of the M-Canal owned by the City of West Palm Beach is protected under a Special Act by the Florida Legislature (Chapter 67-2169). The design speed for the segments north and south of the M-Canal crossing would remain at 45 MPH.

The proposed action includes the at-grade intersection option for the intersection at Okeechobee Boulevard. The findings of the traffic study indicate that the intersection will reach capacity by 2030 regardless if the extension is constructed or not. This implies that the performance at the intersection is not directly related to the proposed extension, but rather due to heavy demands along Okeechobee Boulevard. A grade separated interchange would result in additional impacts to the surrounding community and should be studied as a separate project. A grade separated interchange at SR 7 and Okeechobee Boulevard is already identified by the Palm Beach MPO in its Long Range Transportation Plan (LRTP). A roundabout is recommended for the intersections at 60th Street and the entrance to the Ibis Golf and Country Club. The Ibis Golf and Country Club passed a resolution on December 11, 2009 in favor of the roundabout option if the project was approved.

Other Major Government Actions

Palm Beach County is extending the existing two lane section of SR 7 from Persimmon Boulevard to 60th Street, a distance of one mile. Construction is currently underway. For the purpose of this study, it is assumed that construction of the two lane facility from Persimmon Boulevard to 60th Street would have already been completed prior to the

implementation of this project. The County has received permits and completed the mitigation for impacts associated with this one mile extension.

Corridors and Alternatives Considered

At the start of the study, a corridor evaluation was conducted to select the most reasonable corridor, in addition to the No-Build Alternative, for further evaluation during the remainder of the PD&E Study. This analysis included the evaluation of four corridors as defined in **Section 3.1** and illustrated below.

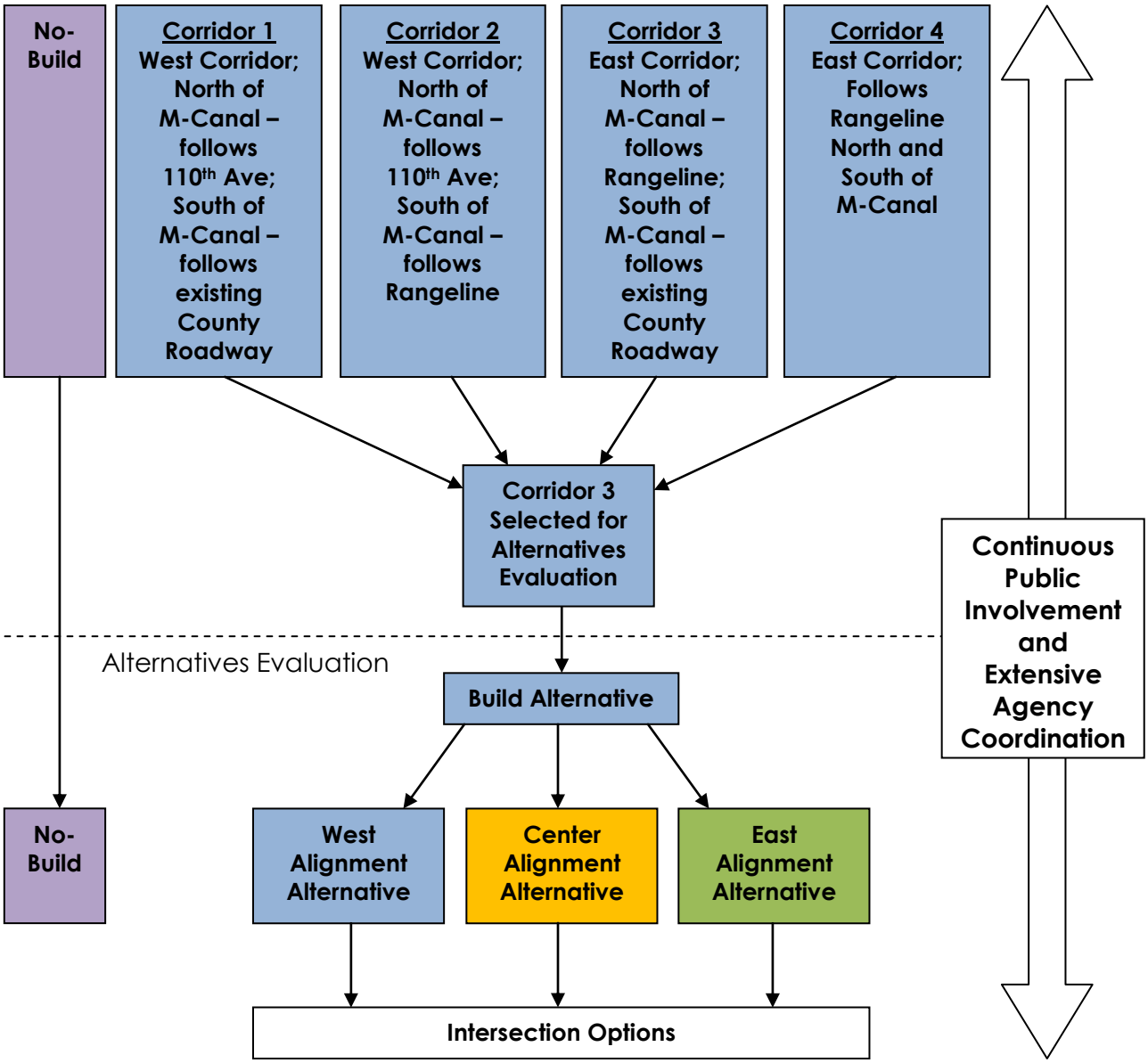

Agency and public participation were an integral component of the corridor selection process. Extensive coordination with federal, state, and local agencies was maintained to ensure an effective evaluation of all impacts. Agency participation was also solicited through the Efficient Transportation Decision Making (ETDM) process. The ETDM process facilitates the interaction among transportation planners and regulatory and resource agencies to review and provide input on transportation projects.

During the corridor evaluation phase, the permitting agencies expressed strong opposition to Corridor 4 as expressed through the ETDM process and during various coordination meetings. The agencies' primary concern with Corridor 4 was the bifurcation of the Pond Cypress Natural Area and Grassy Waters Preserve. During an Agency Corridor Workshop on March 29, 2006, the agencies could not endorse a corridor but it was clear that Corridor 4 was the least favorable. At the same time, the public was overwhelmingly opposed to Corridor 1 due to the high number of potential residential property impacts. For this reason, it was determined that Corridor 3 balanced the concerns and desires of the public and permitting agencies and the FDOT recommended continuing with Corridor 3 and carrying forward this corridor and the No-Build Alternative through the Public Hearing. The selection of Corridor 3 also showed an effort to minimize or reduce the number of wetlands impacted. By selecting Corridor 3, no roadway would be constructed within the FDOT's existing Rangeline right of way between Okeechobee Boulevard and the M-Canal. This section of right of way is equal to 82 acres of undisturbed area. Instead, Corridor 3 positions the proposed extension of SR 7 adjacent to existing developed areas formed by the Village of Royal Palm Beach, Acreage, and Ibis Golf and Country Club. The selection of Corridor 3 also maintains the connectivity between the Pond Cypress Natural Area and Grassy Waters Preserve.

On June 5, 2007, a Corridor Announcement Meeting was held to inform participants of the recommendation to continue with Corridor 3 and the No-Build Alternative through the remainder of the PD&E Study. Additional information related to the corridor selection process is provided within **Section 3.1.6**.

After the corridor phase was completed, various Build Alternatives, in addition to the No-Build Alternative, were developed within Corridor 3 for further refinement and analysis. An overview map is provided within **Figure 3-6**. For the purpose of describing the Build Alternatives, the project is divided into two segments. The first segment extends from Okeechobee Boulevard to the intersection at 60th Street and the second segment continues from the intersection at 60th Street to Northlake Boulevard. Within the first segment, the project includes the widening of the County's existing facility from two to four lanes. A new four lane divided facility is proposed within the second segment. Specific details and typical sections related to the Alternatives are provided within **Section 3.2**.

Three alignment variations were initially proposed within the second segment, these include the West, Center, and East Alignment Alternatives. The West Alignment Alternative was modified after the Public Hearing after extensive coordination with the permitting agencies to minimize impacts to wetlands and natural habitats. Various intersection options were proposed throughout the project. At Okeechobee Boulevard,

both an at-grade intersection and grade separated interchange were considered (**Section 3.2.3.4**). In addition, a roundabout or T-intersection option was considered for both intersections at 60th Street (**Section 3.2.3.5**) and the entrance to the Ibis Golf and Country Club (**Section 3.2.3.6**). Two options for the crossing over the M-Canal were initially proposed (**Section 3.2.3.7**). One option included a skewed bridge crossing and the second option proposed a straight bridge crossing, perpendicular to the M-Canal. The Straight Bridge Crossing Option was modified after the Public Hearing to minimize impacts to the Pond Cypress Natural Area without encroaching on the portion of the M-Canal owned by the City of West Palm Beach. This modification to the M-Canal crossing option was developed in response to concerns raised by the US Army Corps of Engineers (USACE).

Environmental Impacts/Mitigation/Commitments

The proposed project would involve impacts to wetlands, some of which are considered suitable habitat for the Everglades snail kite and wood stork. The West, Center, and East Alignment Alternatives would result in approximately 114.5 acres of wetland impacts which includes 10 acres of habitat suitable for snail kites. Through coordination efforts with the US Fish and Wildlife Service (USFWS), USACE, and other permitting agencies, the West Alignment Alternative was modified after the Public Hearing to minimize impacts to wetlands and natural habitats. These modifications would result in 52.9 acres of wetland impacts and 0.7 acres of impact to snail kite habitat along with the following reductions in impact:

- Approximately 54% reduction in impacts to total wetland impact acres.
- Provides for the greatest reduction in wetland impact to occur within the native-dominated higher quality marshes (approximately 87% impact reduction north of M-Canal) and hydric pine (approximately 92% impact reduction north of M-Canal).
- Reduces impact to snail kite habitat from nearly 10 acres to approximately 0.7 acres (93% reduction).
- Reduces secondary impact acreage in Grassy Waters Preserve wetlands by approximately 58% as a result of incorporating on-site mitigation (through wetland restoration, enhancement, and preservation) on the remaining 56 acres between the M-Canal and Northlake Boulevard.

For unavoidable impacts, FDOT is committed to providing mitigation to compensate for remaining wetland and habitat impacts and has evaluated various on- and off-site mitigation options that will provide the best solution. The mitigation strategies have been extensively coordinated with and requested by the permitting agencies and are outlined in a Conceptual Mitigation Plan provided within **Appendix I**. It includes the donation of FDOT Rangeline property previously identified for transportation purposes. This includes the segments from north of Okeechobee Boulevard to the M-Canal, Northlake Boulevard to SR 710, and SR 710 to Jupiter Farms. The combination of these

properties is approximately 216 acres in size. In addition, FDOT will restore, enhance, and apply a conservation easement over the unused portion of the Rangeline property between the M-Canal and Northlake Boulevard. This 56-acre portion is approximately 170 feet wide and is located between the proposed limits of construction and the western boundaries of the Grassy Waters Preserve. Exotic vegetation will be removed and this section will be restored and enhanced to improve natural conditions. Some off-site mitigation will be required and will be addressed through the Pine Glades North mitigation site. Additional details are provided in Chapter 6 of this Environmental Assessment and in the Conceptual Mitigation Plan.

Coordination with Palm Beach County also led to a *de minimis* finding for Section 4(f) impacts to the Pond Cypress Natural Area. A discussion of the *de minimis* finding is provided within **Section 4.9.1**. The proposed project would involve impacts to the Pond Cypress Natural Area, a preserve owned by Palm Beach County. During the study, it was determined that any encroachment into the Pond Cypress Natural Area would constitute a Section 4(f) use of the property. In addition, the Pond Cypress Natural Area is considered a compensatory mitigation site by USACE as part of the County's two lane extension of SR 7. The USACE stated in letters dated May 27, 2010 and April 2, 2012 that there would be a high potential that USACE would not authorize any impacts to an existing compensatory mitigation site unless it was in the public's interest. Initially, two options for crossing over the M-Canal were under consideration. The Skewed Bridge Crossing Option would not result in any impacts to the Pond Cypress Natural Area but it would encroach within the portion of the M-Canal owned by the City of West Palm Beach. The section of the M-Canal owned by the City of West Palm Beach is protected under a Special Act by the Florida Legislature (Chapter 67-2169). The Straight Bridge Crossing Option would result in 7.3 acres of impact to the Pond Cypress Natural Area. After the Public Hearing and in response to concerns from USACE, the Straight Bridge Crossing Option over the M-Canal was modified so that it reduces the amount of encroachment into the Pond Cypress Natural Area from 7.3 acres to 1.23 acres. Additional details related to the M-Canal crossing options are provided in **Section 3.2.3.7**.

In response to USACE's statement that this project will need to be in the public's interest, the benefits of extending SR 7, in conjunction with the proposed mitigation plan, would more than offset the impacts as follows:

- The extension of SR 7 would benefit the quality of life for area residents as it would enhance regional connectivity and reduce travel times. An efficient roadway network also improves air quality as vehicles spend less time idling at intersections.

- FDOT is committed to transferring ownership of the Rangeline right of way between Okeechobee Boulevard and the M-Canal, an area approximately 82 acres in size. Preserving this section of right of way is in the public's interest as it would maintain the wildlife connectivity between the Pond Cypress Natural Area and Grassy Waters Preserve.

- FDOT is committed to preserving an approximate 170 foot wide buffer between the limit of construction line and western boundary of the Grassy Waters Preserve, an area approximately 56 acres in size. Preserving this area of right of way is in the public's interest as it would create a buffer for the Grassy Waters Preserve. This, in combination with the reduced median width, would prohibit any widening in the future.

- FDOT is committed to transferring ownership of the Rangeline right of way between Northlake Boulevard and SR 710, an area approximately 44 acres in size, to Palm Beach County for conservation. Preserving this area of right of way is in the public's interest as this section of right of way is located between the Loxahatchee Slough and Grassy Waters Preserve and would protect it from future development while maintaining the hydrologic connection.

- FDOT is committed to transferring ownership of the Rangeline right of way between SR 710 to Jupiter Farms, an area approximately 90 acres in size, to Palm Beach County for conservation. This section of right of way bifurcates the Loxahatchee Slough. Preserving this section of right of way for conservation purposes is in the public's interest as it would protect the Loxahatchee Slough from any future extension north of SR 710 and maintain its hydrologic connection.

- The donation of the Rangeline properties listed above is in the public's interest as it would increase the amount of public lands in the area available for conservation and other purposes consistent with the management plans of the adjacent preserves.

Follow-up coordination meetings with the USACE were held in August 13, 2013 and in November 25, 2014 (minutes are provided in the Appendix E of the EA). During these meetings, USACE stated that the permit application would need to include additional documentation supporting why the corridors to the west were eliminated. Since then, FDOT prepared a Corridor Addendum that analyzed these corridors. The addendum concludes that these corridors would result in significant impacts involving numerous property and residential impacts and that none of the western corridors are acceptable alternatives to Corridor 3. During the meeting held on November 24, 2014, USACE acknowledged the mitigation plan prepared for this project, including mitigation for the Pond Cypress Natural Area. In addition, they explained that final comments and acceptance to the proposed impacts and mitigation plan will be provided during the permit application process. FDOT agreed that additional coordination will occur as the project moves closer to permitting.

Noise will increase along the corridor and noise walls were determined to be reasonable and feasible for the Baywinds community, located north of Okeechobee Boulevard, and Amli Apartments, located south of Northlake Boulevard. These communities will be surveyed during the design phase to determine their desire for a noise wall. Additional information is provided within **Section 4.12**.

Areas of Controversy

At the beginning of the study, support for the project was mixed. Residents within the Acreage (represented by the Indian Trail Improvement District) and the Rustic Lakes community were in support of Corridor 4. Residents from the Ibis Golf and Country Club were in favor of the No-Build Alternative. Corridor 3 and the No-Build Alternative were ultimately selected for advancement through the Public Hearing as a compromise between the public and permitting agencies. Specific details related to the corridor selection process are provided within **Section 3.1**. Since then, residents from the Acreage have expressed their support for the project and Corridor 3 while Ibis continues to support the No-Build Alternative. Although the Ibis community is opposed to the project, the FDOT has maintained a working relationship with the community. Various meetings and presentations have been held (**Section 5.2.6**) and productive feedback from Ibis has been received, such as the preference for a roundabout at their entrance.

Coordination with various government agencies, property owners, and local groups has identified three main areas of potential controversy. These include the proximity of the project to the Grassy Waters Preserve, the possibility of a hazardous material spill near the Grassy Waters Preserve in the event of a truck accident, and the proximity of the project to known snail kite habitats.

The City of West Palm Beach owns the Grassy Waters Preserve and has raised concern about the project. The Grassy Waters Preserve is designated by the Florida Legislature as a Water Catchment Area and supplies drinking water to over 130,000 people in West Palm Beach and surrounding areas. It is approximately 12,800 acres in size and also functions as a wildlife refuge attracting numerous wading birds and water fowl. Water from the Preserve is transported through the M-Canal. Both the M-Canal and the Grassy Waters Preserve are designated Class 1 water bodies.

None of the Build Alternatives show the need for right of way from the Grassy Waters Preserve. However, the City of West Palm Beach and residents from the Ibis Golf and Country Club have raised concern regarding the possible contamination of the Preserve due to an accident involving a truck carrying hazardous materials.

In response, several design features have been identified to help protect the Grassy Waters Preserve and M-Canal. These proactive design features include a curb and gutter system, guardrail, and the use of a truck-rated traffic railing for the bridge over the M-Canal. Further discussion regarding these strategies for protecting the Grassy Water Preserve is provided within **Section 4.15.2**. In addition, modifications made to the West Alignment Alternative would increase the buffer between the limit of construction line and western boundary of the Grassy Waters Preserve.

The City of West Palm Beach and residents from the Ibis Golf and Country Club have also raised concern about the potential loss of wetlands and wildlife habitat. Specific concern has been raised about the snail kite, a medium sized hawk listed as endangered by both USFWS and the Florida Fish and Wildlife Conservation Commission

(FFWCC). Nests have been documented near the project corridor but no nests have been documented within the FDOT right of way or within the proposed limits of construction.

Each time an active nest is discovered, restrictions are established limiting the activity around the nest. These restrictions are only in effect during nesting season, generally from December 1 through July 31. Snail kites do not return to a specific nest site from year to year, therefore all of the restrictions are lifted once breeding activity has ceased. Since nest locations could change each year, a monitoring program would be conducted to ensure that construction activities are restricted or limited within identified buffer zones. Additional information related to Wildlife and Habitat is provided within **Section 4.19**.

List of Other Government Actions Required

An Environmental Resource Permit would be required from the South Florida Water Management District for approval of the project's Surface Water Management Plan and associated wetland impacts. A USACE Section 404 Dredge and Fill Permit would be required for filling in wetlands, and a National Pollutant Discharge Elimination System (NPDES) Permit would be required from the Florida Department of Environmental Protection (FDEP).

CHAPTER 1: DESCRIPTION OF PROPOSED ACTION

The Florida Department of Transportation (FDOT) is conducting a Project Development and Environment (PD&E) Study for the extension of State Road (SR) 7 to CR 809A (Northlake Boulevard) in Palm Beach County, Florida. The project includes the widening of an existing County roadway from two to four lanes from SR 704 (Okeechobee Boulevard) to 60th Street and construction of a new four lane divided facility from 60th Street to Northlake Boulevard. A project location map is provided in **Figure 1-1**. The objective of this PD&E Study is to satisfy National Environmental Policy Act (NEPA) procedures in order to receive Location and Design Concept Acceptance (LDCA) from the Federal Highway Administration (FHWA).

This report is prepared in accordance with the FDOT PD&E Manual, Part 1, Chapter 6. The purpose of this report is to document the analysis in support of the environmental study, consistent with federal, state and local objectives.

The purpose of the project is to provide an efficient connection between Okeechobee Boulevard and Northlake Boulevard for the western areas of Palm Beach County. Currently, the north-south options between the two facilities are limited for the areas west of the Florida's Turnpike. The Turnpike is located four miles to the east of SR 7 and Seminole Pratt Whitney Road is located six miles to the west. For residents of the Village of Royal Palm Beach and the Acreage, the primary travel route from Okeechobee Boulevard to Northlake Boulevard includes a combination of Royal Palm Beach Boulevard, Orange Boulevard, and Coconut Boulevard. This route is approximately eight miles long and includes six miles through a two lane undivided facility fronted by residential properties.

Various alternatives, including the No-Build Alternative, are being considered as part of this PD&E Study. For the purpose of describing the Build alternatives, the project is divided into two segments. The first segment extends from Okeechobee Boulevard to the intersection at 60th Street and the second segment continues from the intersection at 60th Street to Northlake Boulevard. Within the first segment, the project includes the widening of the County's existing facility from two to four lanes. A new four lane divided facility is proposed within the second segment with a bicycle lane and sidewalk along each side.

Various intersection options are proposed throughout the project. At Okeechobee Boulevard, both an at-grade intersection and grade separated interchange are being considered. In addition, a roundabout or T-intersection option is being considered for both intersections at 60th Street and the entrance to the Ibis Golf and Country Club. Two options for the crossing over the M-Canal are also proposed.

Figure 1-1: Project Location Map

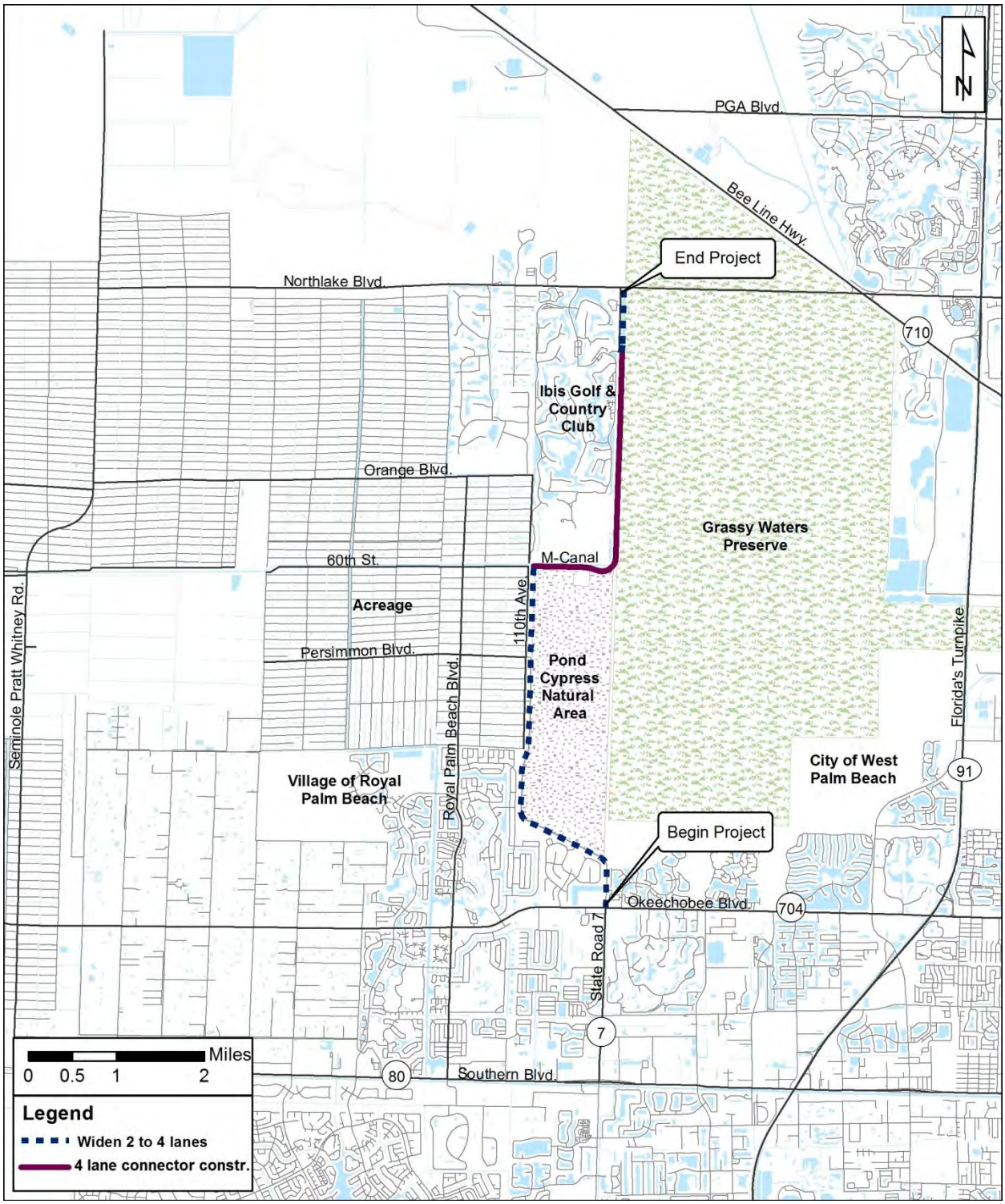

CHAPTER 2: NEED

The purpose of the project is to extend SR 7 to the Northlake Boulevard. Currently, the north-south travel network between Okeechobee Boulevard and Northlake Boulevard is limited. The need for the project is summarized as follows: (1) there is a clear necessity to improve system linkage between Okeechobee Boulevard and Northlake Boulevard; (2) travel demands within western Palm Beach County will continue to grow; and (3) the Palm Beach Metropolitan Planning Organization (MPO) has identified this project as a critical priority.

2.1 SYSTEM LINKAGE

As one of four major arterial facilities connecting Miami-Dade, Broward, and Palm Beach Counties, SR 7 is a critical inter-regional component of south Florida's transportation network. Other north-south facilities, listed in order from west to east, include the Florida's Turnpike, Interstate 95 (I-95), and US 1. Travel demands within the project area will continue to grow and connecting SR 7 with Northlake Boulevard is vital to satisfying capacity and mobility needs. The proposed improvement would be usable and beneficial to the surrounding network and could function independently without the need for additional network improvement. The connection up to Northlake Boulevard is expected to operate acceptably, meeting the requirements for independent utility.

2.2 TRANSPORTATION DEMAND

The proposed extension of SR 7 is consistent with the following transportation plans listed below. A copy of the Planning Consistency Checklist is provided within **Appendix A**.

- Palm Beach County Comprehensive Plan (Transportation Element, Policy 1.4-m)
- Palm Beach MPO Year 2035 Long Range Transportation Plan (LRTP) Cost Feasible Plan
- Palm Beach MPO Fiscal Year (FY) 2011-2015 Transportation Improvement Program (TIP)

2.3 FEDERAL, STATE OR LOCAL GOVERNMENT AUTHORITY

On June 17, 2004, the Palm Beach MPO filed a motion to direct FDOT to begin a PD&E Study for extending SR 7. The motion was carried unanimously. Traffic demands associated with future growth within the area indicated a need for extending SR 7 to relieve congestion within the western portions of the County. The limits of the project, from Okeechobee Boulevard to Northlake Boulevard, were established during the next meeting on July 15, 2004.

The project was added to the Tentative FY 2006-10 Transportation System Priorities list and presented to the MPO Board on October 21, 2004 for approval. The project list was then transmitted to the FDOT, District Four, for inclusion in its Work Program. Every year since, the project has been included in the Work Program. Most recently, on October 20, 2011, the MPO Board approved the Tentative FY 2013-2017 FDOT Work Program that includes the design and construction phases.

2.4 SOCIAL DEMANDS OR ECONOMIC DEVELOPMENT

At one time, over 14,000 residential units were proposed within areas surrounding the project corridor. Those proposed developments have been canceled since the start of the study due to recent economic conditions. However, the traffic analysis prepared for this study maintains the need for a four lane divided facility even with lower growth and population estimates.

2.5 MULTIMODAL INTERRELATIONSHIPS

Existing bus services provided by Palm Tran near the project area is limited to Route 52, the Royal Palm Beach Crosstown route. This route loops between Okeechobee Boulevard, SR 7, Southern Boulevard, and Royal Palm Beach Boulevard. The Palm Beach County MPO has identified in the 2035 LRTP the need for bicycle and pedestrian facilities within the future extension of SR 7. These features would also be provided per FDOT policies.

2.6 SAFETY

The proposed extension of SR 7 would facilitate the hurricane evacuation process by providing additional capacity and connectivity in this area. There are no designated evacuation routes or evacuation shelters within the study area. The closest designated evacuation routes include Southern Boulevard (running east to west), the Florida's Turnpike (running south to north), and Beeline Highway (SR 710) (running southeast to northwest). Okeechobee Boulevard (running east to west) is also considered an evacuation route, but for the segment east of the Florida's Turnpike; approximately 3.8 miles east of the study area. The extension of SR 7 would facilitate the evacuation process by improving the linkage between Northlake Boulevard and Southern Boulevard.

CHAPTER 3: ALTERNATIVES CONSIDERED

At the start of the study, a corridor evaluation was conducted to select the most reasonable Build Corridor, in addition to the No-Build Alternative, for further evaluation during the remainder of the PD&E Study. Following the corridor selection process, the alternatives evaluation process began within the selected corridor. Corridor 3 was the common preferred corridor among the public and environmental agencies in addition to the No-Build Alternative. This chapter documents the corridor evaluation phase and the alternatives considered within the preferred corridor. Ultimately, a preferred alternative, which could include the No-Build Alternative, will be selected after the Public Hearing and presented to the FHWA for Location and Design Concept Acceptance.

3.1 CORRIDOR EVALUATION

A corridor evaluation was conducted to identify and evaluate viable corridors acceptable to the community and permitting agencies while satisfying the project need. The analysis and effort conducted during this phase is documented in the Corridor Report available under separate cover. During the corridor analysis phase, four corridors (**Figure 3-1**) and the No-Build Alternative were evaluated for potential effects within the project vicinity. Each corridor was developed with consideration to existing environmental features, adjacent roadway projects within the area, and available right of way resources.

An extensive public involvement and agency coordination program was conducted during the corridor evaluation process. This included a Public Kickoff Meeting, Corridor Alternatives Workshop, and a Corridor Announcement Meeting. Additional information regarding these meetings is presented within **Chapter 5** of this document. Other coordination meetings were held with various permitting agencies, Palm Beach County, the City of West Palm Beach, and the local communities (meeting minutes are available within **Appendix E**). The corridors were also evaluated through the Efficient Transportation Decision Making (ETDM) process. A copy of the ETDM Summary Report is provided within **Appendix C**. The combination of public comments received, agency input, and potential environmental impacts has led the FDOT to recommend Corridor 3 and the No-Build Alternative for further evaluation. A description of the four corridors studied, as well as the selection process, is provided in the following sections.

3.1.1 CORRIDOR 1

Beginning at the intersection of Okeechobee Boulevard and SR 7, Corridor 1 follows the County's existing two lane roadway from Okeechobee Boulevard to Persimmon Boulevard and continues north, parallel to 110th Avenue. The proposed alignment then crosses over the M-Canal and continues north, just west of the Ibis Golf and Country Club, before terminating at Northlake Boulevard.

3.1.2 CORRIDOR 2

Beginning at the intersection of Okeechobee Boulevard and SR 7, Corridor 2 proceeds north within the FDOT's existing right of way. Within one mile of the M-Canal, the alignment turns northwest, continues through the Pond Cypress Natural Area, and then turns north parallel to 110th Avenue. After crossing the M-Canal, Corridor 2 continues along the west side of the Ibis Golf and Country Club before terminating at Northlake Boulevard.

3.1.3 CORRIDOR 3

Beginning at the intersection of Okeechobee Boulevard and SR 7, Corridor 3 follows the County's existing two lane roadway from Okeechobee Boulevard to Persimmon Boulevard and continues north, parallel to 110th Avenue. At 60th Street, the alignment turns east, parallel to the M-Canal, and then turns north while crossing the M-Canal to tie into the FDOT's existing right of way. Once within the FDOT right of way, the alignment continues north along the east side of the Ibis Golf and Country Club before terminating at Northlake Boulevard.

3.1.4 CORRIDOR 4

Beginning at the intersection of Okeechobee Boulevard and SR 7, Corridor 4 proceeds north within the FDOT's existing right of way and crosses the M-Canal before terminating at Northlake Boulevard. This alignment is commonly referred to as the "Rangeline" alignment since the corridor runs adjacent to the line separating Range 41 and Range 42.

3.1.5 NO-BUILD ALTERNATIVE

Under the No-Build Alternative, future traffic conditions for the surrounding roadway network are analyzed with the assumption that the proposed improvement is not in place. These traffic projections provide a benchmark for comparative purposes with the other Build Alternatives. The No-Build Alternative is always identified as a viable option throughout the PD&E process.

Figure 3-1: Corridors Evaluated

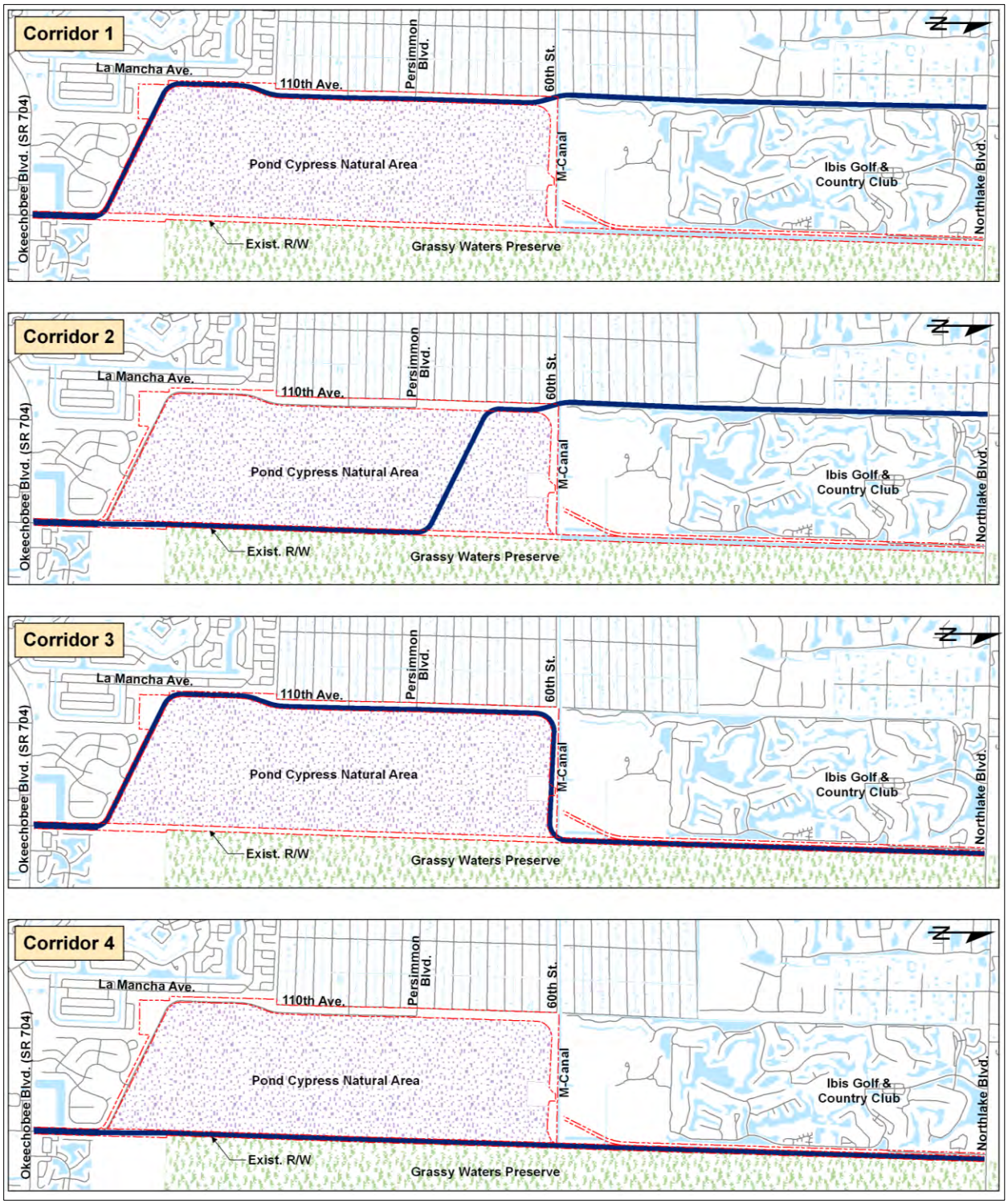

3.1.6 CORRIDOR SELECTION PROCESS

Agency and public participation was an integral component of the corridor selection phase. Extensive coordination with federal, state, and local agencies was maintained to ensure an effective evaluation of all impacts. Agency coordination began when the Advance Notification (AN) package was distributed (June 16, 2005) and comments were solicited. A copy of the Advance Notification package and responses is provided within **Appendix B**. To address any potential questions during the comment period, the FDOT held a Kickoff Meeting (July 26, 2005) for agency representatives and elected officials (a copy of the meeting minutes are provided within **Appendix E**). Recipients of the Advance Notification package were invited to discuss the proposed project and to have their questions answered about the information presented. Approximately 28 individuals representing various federal, state, and local agencies or government offices were present at the meeting.

Following the Advance Notification phase, a Public Kickoff Meeting was held (September 27, 2005) to introduce the project to the public and to provide an opportunity for early participation. The meeting followed an informal, open house format, and provided an opportunity for the public to acquaint themselves with the project and to provide their comments. Approximately 116 individuals attended the meeting. Throughout the evening, project information was presented on display boards for informal review and members of the project team were available to hold "one on one" conversations and respond to individual questions. Comment sheets were provided for participants to submit their comments and ideas.

Most of the participants, through written comments, expressed their support for the Rangeline alignment (Corridor 4) due to the buffer it provides between SR 7 and the Acreage community. However, some expressed concern over the possibility of truck accidents causing hazardous material spills, resulting in contamination of the City of West Palm Beach Water Catchment Area (Grassy Waters Preserve). Residents from the Ibis Golf and Country Club were concerned about the potential traffic growth and congestion along Northlake Boulevard. Concern was also expressed for the addition of a new signalized intersection near the Ibis community.

After initial data collection and evaluation of each corridor, the results were presented to the agencies during an Agency Workshop on March 29, 2006. The purpose of the workshop was to provide an update to the permitting agencies and interested groups on the progress of the SR 7 project and to solicit their feedback and opinion of each proposed corridor, including the No-Build Alternative. Approximately 36 individuals representing federal, state, and local agencies, environmental interest groups, and local governments attended the workshop (a copy of the meeting minutes is provided within **Appendix E**). After the question and answer session, agency representatives were divided into five groups. Each group was instructed to discuss Corridors 1, 3, 4 and the No-Build Alternative. The groups were asked not to consider Corridor 2 since the FDOT removed this option from further consideration prior to the workshop. Corridor 2 was the only corridor that would result in the most controversial impacts including the bifurcation of the Pond Cypress Natural Area and Grassy Waters Preserve and the

residential relocations along the west side of Ibis. To help facilitate the process, each group was given one large easel pad with each alternative and the No-Build Alternative listed on each pad. Each person was then given three dots and asked to place one, two, or all three dots next to the alternative of their choice. It was clear that although none of the agencies endorsed a corridor, Corridor 4 was the least favorable.

On May 15, 2006, the Indian Trail Improvement District (ITID) held a special meeting to provide its constituents a chance to comment on the project prior to the scheduled Public Corridor Meeting. Approximately 160 individuals attended the meeting, of which 27 provided their comments. In general, participants showed their support for Corridor 4 with many expressing that SR 7 should be extended as originally planned – through the Rangeline. At the end of the meeting, a vote (by show of hands) was taken by the Indian Trail Improvement District board members. Corridor 4 received the most votes with 156 and Corridor 3 received one vote. Corridor 1 did not receive any votes. A petition was also circulated but did not list Corridor 3 as an option.

A Public Corridor Meeting was then held to present the findings of the corridor analysis to the public (May 24, 2006). Approximately 490 individuals attended the meeting. Comment sheets and a "Corridor Ranking Form" were distributed for all participants to state their preference. Additional copies were made available for them to take to their neighbors if not in attendance. Approximately 688 corridor ranking forms were received that evening and later by mail. Each person who filled out the form was asked to rank the Corridors and No-Build Alternative in order of preference. Corridor 2 was not listed as an option as it was eliminated from further consideration prior to the meeting. Based on the results summarized, Corridor 4 was ranked in first place followed by the No-Build Alternative.

The Palm Beach County Legislative Delegation held a meeting on June 26, 2006 to discuss the SR 7 Corridor Extension project and provide the public with the opportunity to voice their comments. Twenty six individuals provided their comments with 16 stating their preference for Corridor 4. Approximately three stated their preference for the No-Build Alternative.

To obtain additional input from the permitting agencies, comments were solicited on June 28, 2006 through the ETDM process. The ETDM process facilitates the interaction among transportation planners and regulatory and resource agencies to review and provide input on transportation projects. Reviews are conducted through the Environmental Screening Tool (EST); an internet application that provides each agency with central access to all project information, Geographic Information System (GIS) reviews, and the ability to upload their comments. The interaction between each agency is conducted through the Environmental Technical Advisory Team (ETAT), which consists of representatives from different regulatory and resource agencies.

A meeting with USACE was held on July 10, 2006 at the USACE Palm Beach Gardens Regulatory Office to provide an update of the PD&E Study and obtain input on the proposed corridors with regard to permitting and mitigation requirements. Although USACE could not endorse a corridor, representatives expressed concern about Corridor

4. The USACE also expressed their understanding that the public is not in favor of Corridor 1. A copy of the meeting minutes is provided within **Appendix E**.

A similar meeting was held with the South Florida Water Management District (SFWMD) on July 17, 2006 at the South Florida Water Management District headquarters. Most of the concern raised by the South Florida Water Management District was directed towards Corridor 4 and included issues such as potential contamination to the Grassy Waters Preserve, secondary impacts, and further bifurcation of the natural areas since Persimmon Boulevard and 60th Street would likely be extended if Corridor 4 is selected. The South Florida Water Management District later provided a letter explaining why Corridor 4 is not a desirable option. A copy of this letter is provided within **Appendix D**. Meeting minutes are provided within **Appendix E**.

On August 12, 2006, the ETDM comment period closed and all responses were collected. As a result, a Dispute Resolution rating was assigned by USFWS for Corridors 2 and 4 with regard to wetlands and wildlife and habitat. Assigning a category as Dispute Resolution typically signifies that the project (or in this case, the corridor) does not conform to statutory requirements. The USFWS's main concern with Corridors 2 and 4 is the resulting bifurcation of the natural areas. Corridors 2 and 4 would divide the Pond Cypress Natural Area and Grassy Waters Preserve.

To reduce the Dispute Resolution rating received for Corridor 4 (Corridor 2 was already eliminated as discussed previously), a meeting was held on November 9, 2006 with Environmental Technical Advisory Team members. During this meeting, a bridge alternative was presented as an option for maintaining the connectivity between the natural areas. However, USFWS reiterated its concerns over the potential impacts associated with Corridor 4 and did not change the Potential Dispute rating.

After an extensive coordination effort, it was determined that Corridor 3 balanced the concerns and desires of the public and permitting agencies. For this reason, the FDOT recommended to further develop Corridor 3 and carry forward this corridor and the No-Build Alternative through the Public Hearing. This recommendation was made due to the following reasons:

- The public overwhelmingly expressed strong opposition to Corridor 1 during a Public Corridor Workshop on May 24, 2006, due to the number of potential residential relocations.

- The permitting agencies expressed strong concern for Corridor 2 due to the bifurcation of the Section 1 mitigation site (now part of the Pond Cypress Natural Area). Through the ETDM process, USFWS assigned a Dispute Resolution degree of effect for Corridor 2 due to the potential for bifurcating the natural areas including the Pond Cypress Natural Area and Grassy Waters Preserve. The public also raised concern over the potential for residential relocations.

- The permitting agencies expressed strong concern for Corridor 4 due to the bifurcation of the natural areas formed by the Pond Cypress Natural Area and

Grassy Waters Preserve. Through the ETDM process, USFWS assigned a Dispute Resolution degree of effect for Corridor 4.

- East/west connections from the residential communities to the proposed extension of SR 7 are crucial to the project and would be required. These connections would not further impact the environment if Corridor 3 is selected since the corridor would be located adjacent to the communities. If Corridor 4 is selected, then an extension of these east/west roadways through the natural areas would be required. The permitting agencies have expressed strong concern about this.

- With strong opposition to Corridors 1, 2 and 4, Corridor 3 served as a compromise between the public and permitting agencies for further analysis, in addition to the No-Build.

- The construction of SR 7 along Corridor 3 is the most feasible in terms of cost and environmental impacts. It avoids the bifurcation of the Pond Cypress Natural Area and Grassy Waters Preserve and reduces the amount of wetland impacts when compared to Corridor 4. No roadway would be constructed within the existing Rangeline right of way for the portion between Okeechobee Boulevard and the M-Canal; an area approximately 80 acres in size.

On April 27, 2007, the FHWA conceptually concurred with this recommendation through the ETDM system (**Appendix C**). In addition, the FHWA determined that the level of documentation for the PD&E Study of Corridor 3 and the No-Build Alternative would be an Environmental Assessment (EA).

A Corridor Announcement Meeting was held on June 5, 2007, to inform participants of the recommendation to continue with Corridor 3 and the No-Build Alternative through the remainder of the PD&E Study. During the meeting, a voice-over presentation was provided after which meeting participants were invited to make a public statement or to submit written comments.

Approximately 110 individuals attended the meeting. Prior to the presentation, members of the project team were available to hold one-on-one conversations and respond to individual questions. After the voice-over presentation, 20 individuals made public statements. Some expressed their urgency for construction to begin and said that they think the "State Road 7 extension is absolutely necessary and long overdue considering the unparalleled growth in the western community." Others, however, expressed their concern for the amount of noise and air pollution that may be created by this project as well as the potential for traffic to increase on Northlake Boulevard.

Statements from local government representatives were also received. Ms. Michelle Damone, President of the Indian Trail improvement District, stated that the ITID supports Corridor 3 and that "It's important to our community that this road is built in its entirety all the way to Northlake Boulevard and connect to the existing State Road 7 that is on the side of the Publix Ibis shopping center..." Mr. Alex Hansen, a planner from the City of

West Palm Beach, expressed to the audience the City's concern for how the Grassy Waters Preserve may be impacted by this project. The Grassy Waters Preserve is the primary source of drinking water for the City of West Palm Beach and other municipalities.

In addition to verbal statements, 44 written comments were received during the meeting and by mail. These comments essentially echoed both the support, as well as the concern received verbally that evening. A copy of the voice-over presentation, handouts, display boards, and comments received are retained in the project file.

The corridor evaluation process was completed in August of 2007 and is documented in the Corridor Report. As a result, Corridor 3 and the No-Build Alternative were moved forward through the PD&E Study for further analysis and refinement.

3.1.7 CORRIDOR ADDENDUM

After the Public Hearing, comments were received from the City of West Palm Beach and USACE to evaluate additional corridors to the west. In response, the FDOT conducted an evaluation of five alternative alignments within two corridors; three alternative alignments along 130th Avenue North and two alternative alignments along 140th Avenue North. The results of this study are documented within a *Corridor Report Addendum* prepared under separate cover and conclude that these corridors would result in significant impacts involving numerous property and residential impacts. None of the five corridors are acceptable alternatives to Corridor 3.

3.2 ALTERNATIVES EVALUATION

Following the corridor selection process, various Build Alternatives were evaluated using the selected corridor (Corridor 3). Also, a No-Build Alternative was carried forward for evaluation. An evaluation of the No-Build and Build Alternatives is presented in the following sections.

3.2.1 NO-BUILD ALTERNATIVE

Under the No-Build Alternative, future traffic conditions for the surrounding roadway network, as identified in the 2035 Palm Beach County Long Range Transportation Plan, are analyzed with the assumption that the proposed improvement is not in place. These traffic projections provide a benchmark for comparative purposes with the other Build Alternatives and are summarized within the Design Traffic Technical Memorandum. The proposed improvements identified in the 2035 Cost Feasible Plan include the following:

- Widening of Northlake Boulevard from four lanes to six lanes.
- Improving 60th Street and widening it to three lanes.

The advantages of the No-Build Alternative include the following:

- No impacts to the wetlands.
- No environmental degradation or disruption of natural resources.
- No additional noise impacts.

The disadvantages of the No-Build Alternative include the following:

- No relief to the increasing traffic demands in the area.
- No new access to Northlake Boulevard.
- No new bicycle or pedestrian accommodations in this corridor.
- Inconsistency with the Palm Beach County Comprehensive Plan.
- Inconsistency with the Palm Beach MPO 2035 Long Range Transportation Plan.
- Does not facilitate the hurricane evacuation process.

3.2.2 TRANSPORTATION SYSTEMS MANAGEMENT

The Transportation Systems Management (TSM) Alternative includes those types of activities designed to maximize the use of the existing transportation system. It is a limited construction alternative that uses minor improvements to address the deficiencies identified by the project need. Because the primary purpose of the project is to provide system linkage between Okeechobee Boulevard and Northlake Boulevard, only the Build or No-Build Alternatives were considered. The nearest existing travel route from Okeechobee Boulevard to Northlake Boulevard includes a combination of Royal Palm Beach Boulevard, Orange Boulevard, and Coconut Boulevard. This route is approximately eight miles long and includes six miles through a two lane undivided facility fronted by residential properties. Because of the existing land uses surrounding this route, it would not serve as an ideal solution to address the purpose and need of this project.

3.2.3 ALTERNATIVES EVALUATIONS

Within the project corridor, there are two existing roadway facilities (**Figure 3-2**). The first facility (**Figure 3-3**) is a two lane undivided Palm Beach County roadway, designated as SR 7 Extension, from Okeechobee Boulevard to Persimmon Boulevard (3.5 miles). Construction is now underway by the County for extending this two lane facility from Persimmon Boulevard to 60th Street. The second facility (**Figure 3-4**) is a two lane undivided Palm Beach County roadway from the Ibis entrance to Northlake Boulevard (0.7 miles). Between Persimmon Boulevard and the Ibis entrance, the corridor consists of undeveloped areas with wetland habitats and marshes.

Figure 3-2: Existing Intersections and Roadway Facilities

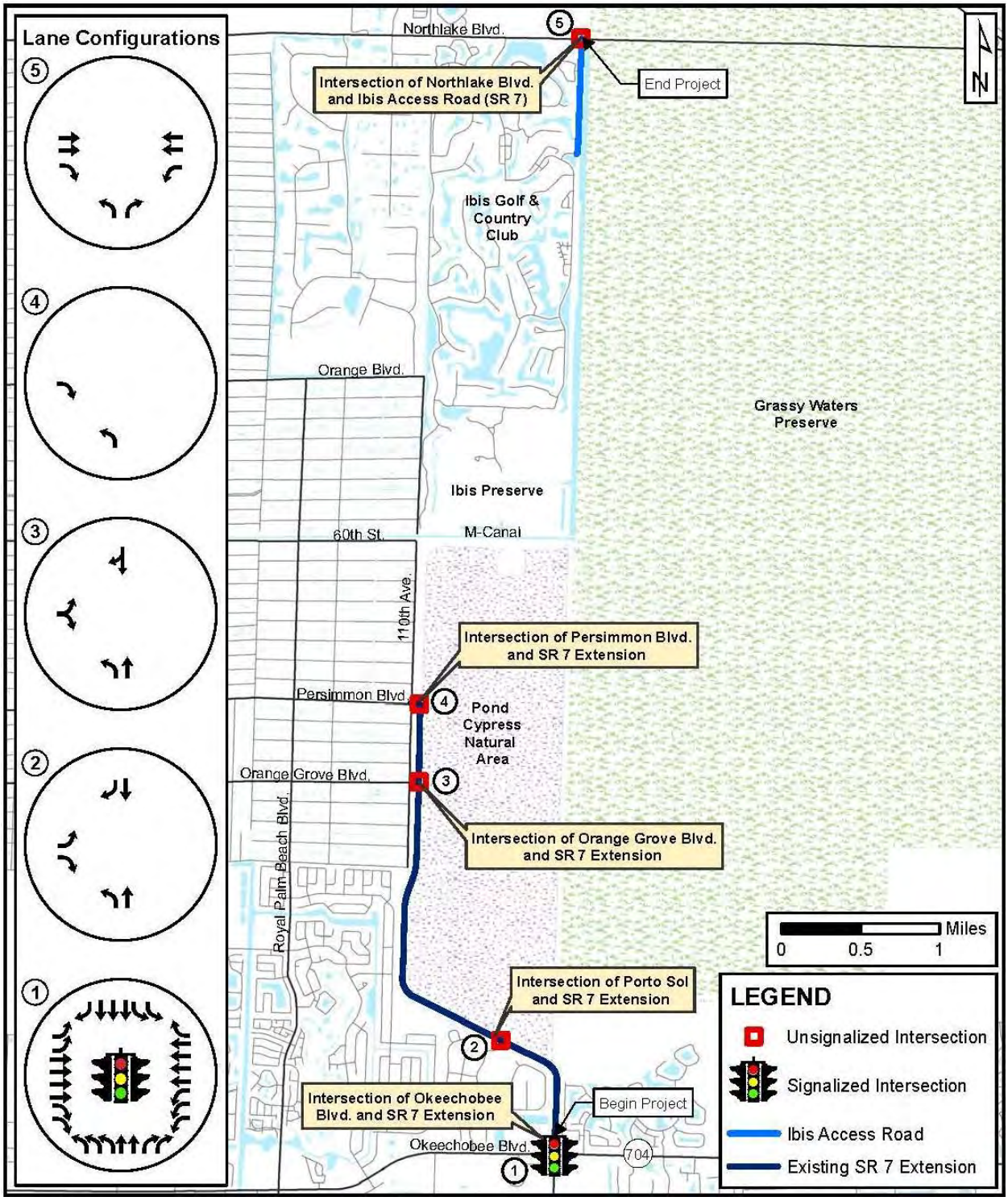

Figure 3-3: Existing Two Lane County Facility (Looking North) from Okeechobee Boulevard to Persimmon Boulevard

Figure 3-4: Existing Two Lane County Facility (Looking North) from Ibis Entrance to Northlake Boulevard

The available right of way within the project corridor includes a 200 foot wide section owned by the FDOT that extends from the intersection of Okeechobee Boulevard and SR 7 and continues directly north to Northlake Boulevard. This section of right of way, commonly referred to as the Rangeline right of way, is adjacent to the western boundary of the Grassy Waters Preserve and has been under FDOT's ownership since the late 1940s. The available right of way along the County's existing two lane roadway varies between 185 and 360 feet. In addition, the County owns a section of right of way along the south bank of the M-Canal that varies between 78 and 367 feet and a 120 foot wide parcel that is located along the east side of the Ibis Golf and Country Club and adjacent to the FDOT's right of way. Specific right of way locations and widths are shown in **Figure 3-5** and in the conceptual alternatives plan sheets provided in **Appendix F**. Right of way ownership records are provided in **Appendix H**.

The County's 120 foot wide section of right of way along the east side of the Ibis community was created as part of the Ibis development agreement. During the permitting and approval process for Ibis in the late 1980s, the Ibis developer agreed to donate a 120 foot wide section of right of way to the County for the purpose of constructing SR 7. This agreement also included provisions for allowing 46.8 acres of roadway runoff to be treated within the Ibis lake system.

In general, the west side of the project corridor consists of residential areas defined by the Village of Royal Palm Beach, the Acreage, and the Ibis Golf and Country Club. The east side of the project corridor consists of natural areas and preserves identified as the Pond Cypress Natural Area and Grassy Waters Preserve. The Pond Cypress Natural Area is owned by Palm Beach County. The Grassy Waters Preserve is owned by the City of West Palm Beach and serves as the City's main drinking water supply. There is one existing canal, designated as the M-Canal, which traverses through the study area in an east-west direction. A bridge over the M-Canal would be required as part of this project. Both the M-Canal and Grassy Waters Preserve are designated Class 1 Waters. The M-Canal conveys water from the Grassy Waters Preserve to Lake Mangonia and Clear Lake. Both lakes are located east of I-95 and just west of Downtown West Palm Beach. The City's water treatment plant is located off of Clear Lake.

For the purpose of describing the Build Alternatives, the project is divided into two segments. The first segment extends from Okeechobee Boulevard to the intersection at 60th Street and the second segment continues from the intersection at 60th Street to Northlake Boulevard. Within the first segment, the project includes the widening of the County's existing facility from two to four lanes. A new four lane divided facility is proposed within the second segment. Various intersection options are proposed throughout the project including locations at Okeechobee Boulevard, 60th Street, and the entrance to the Ibis Golf and Country Club. Three options for the crossing over the M-Canal are also proposed. An overview of the Build Alternatives is illustrated within **Figure 3-6** and concept plans are provided within **Appendix F**. Additional detail is provided in the following sections.

Figure 3-5: Existing Right of Way

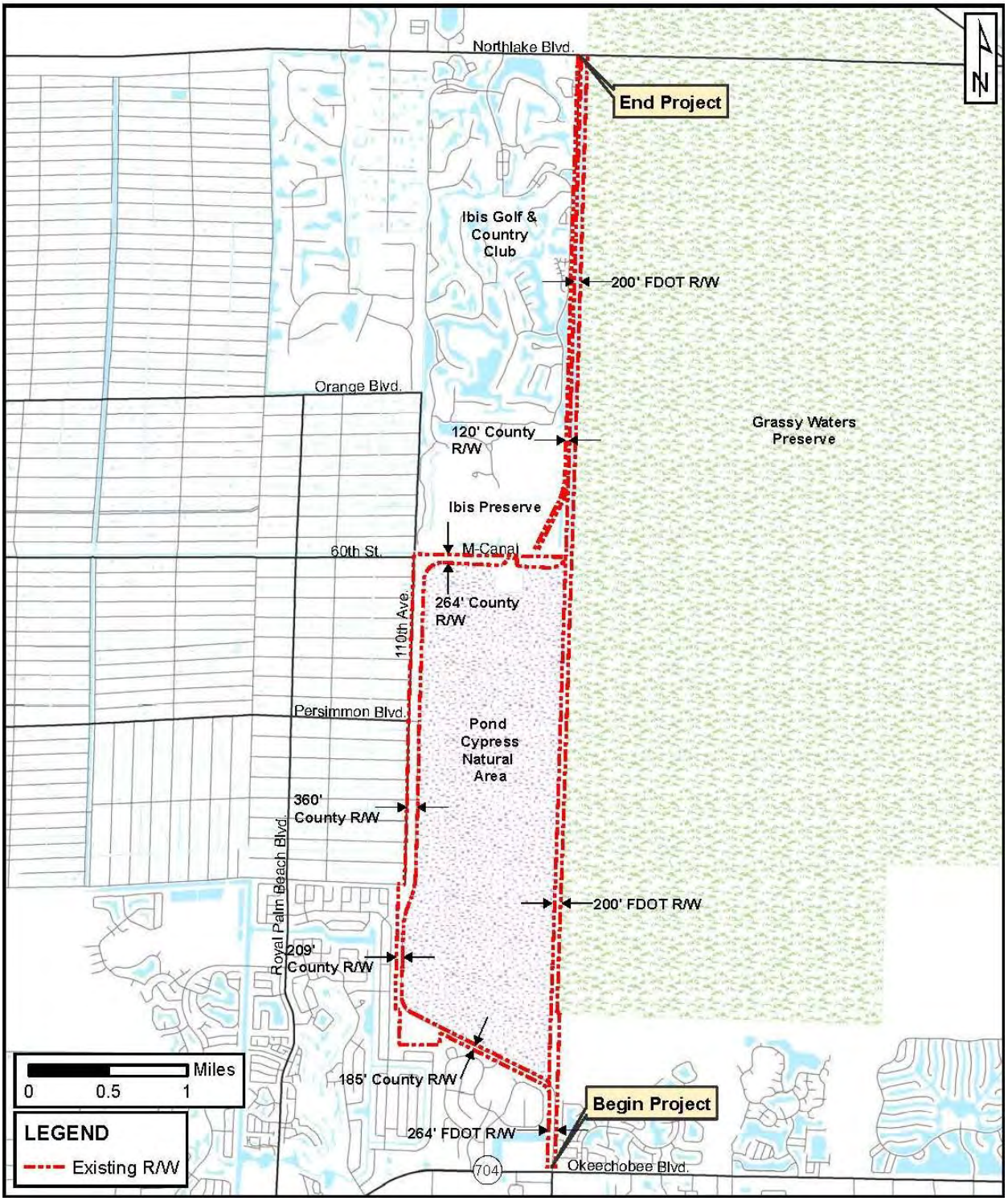

Figure 3-6: Alternatives Overview

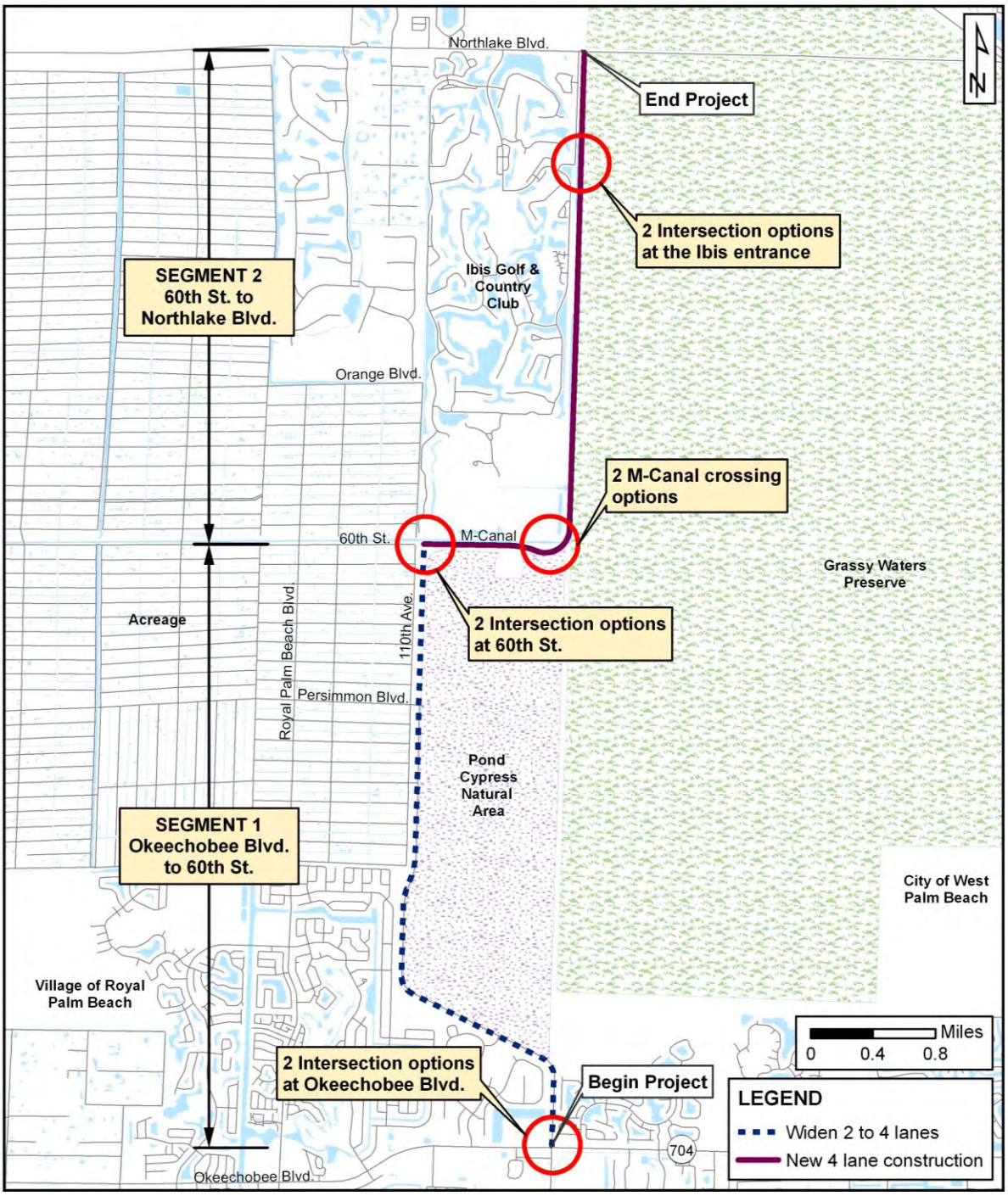

3.2.3.1 SEGMENT 1

Segment 1 extends from Okeechobee Boulevard to 60th Street. The existing County roadway is a two lane undivided roadway with 12 foot wide travel lanes, a 10 foot wide shoulder along the northbound lane, a five foot wide shoulder along the southbound lane, and a posted speed limit of 45 miles per hour (MPH). The available right of way within this segment of the project corridor varies from 185 to 360 feet and is located along the western boundary of the Pond Cypress Natural Area. Within this segment, only one Build Alternative is proposed. This alternative includes the widening of the County's existing roadway from two lanes undivided to four lanes divided.

The additional two lanes would be constructed along the west side of the existing roadway. The southbound lanes would include two 12 foot wide travel lanes and a four foot wide bicycle lane. For the northbound lanes, the existing facility (39 feet of total pavement with shoulders) would be converted to two 12 foot wide travel lanes with a four foot wide bicycle lane. This would result in 28 feet of pavement with no shoulders. The northbound and southbound lanes would be separated by a 42 foot wide median. At the time when the County received permits for the two lane undivided facility from Okeechobee Boulevard to Persimmon Boulevard, a conceptual permit was obtained based on four lanes divided within an impervious footprint defined as 120 feet wide from back of sidewalk to back of sidewalk. The County constructed the road bed for these additional two lanes based on the ultimate four lane divided typical section identified in the conceptual permit. The proposed alternative within this segment would construct the southbound lanes within the footprint established by the County. This would result in a 42 foot wide median separating the northbound and southbound lanes. See **Figures 3-7** through **3-12** for the existing and proposed roadway typical sections.

The future 2040 volumes along Segment 1 will range from 47,600 (near the intersection at Okeechobee Boulevard) to 14,000 vehicles per day (near the intersection at 60th Street). Additional information is provided within the Design Traffic Technical Memorandum. The level of service at the intersections is presented in the following sections.

Additional information related to Segment 1 includes the following:

- FDOT design standards were followed in the development of the typical sections and concept plans. This included the latest FDOT Plans Preparation Manual.
- The existing horizontal and vertical alignment would be maintained.
- No additional right of way is required to widen the existing roadway from two to four lanes.
- The existing drainage system consists of a 50 foot wide dry swale parallel to the roadway and one retention pond. No additional drainage facilities or pond sites are proposed within this segment. Drainage details are provided within the Pond Siting Report.

- With respect to traffic control, the traffic could be maintained on the existing roadway during construction of the additional two lanes.

- No access management changes are proposed. The existing median and intersection spacing would remain as existing.

- The environmental impacts associated with Segment 1 include the potential for noise impacts to residences in the Baywinds development near the intersection at Okeechobee Boulevard. No additional impacts to adjacent wetlands or wildlife habitats are anticipated. Additional information related to potential environmental impacts is provided within **Chapter 4**.

- The estimated construction cost for widening from Okeechobee Boulevard to 60th Street is $21,846,971.

Figure 3-7: Existing Typical Section-Okeechobee Boulevard to Madrid Street

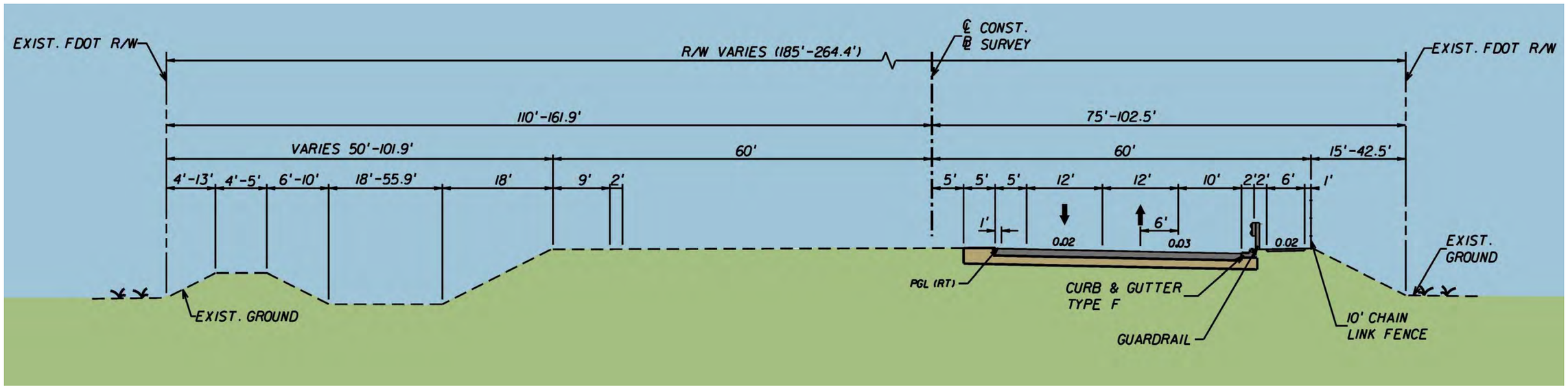

Figure 3-8: Proposed Typical Section-Okeechobee Boulevard to Madrid Street

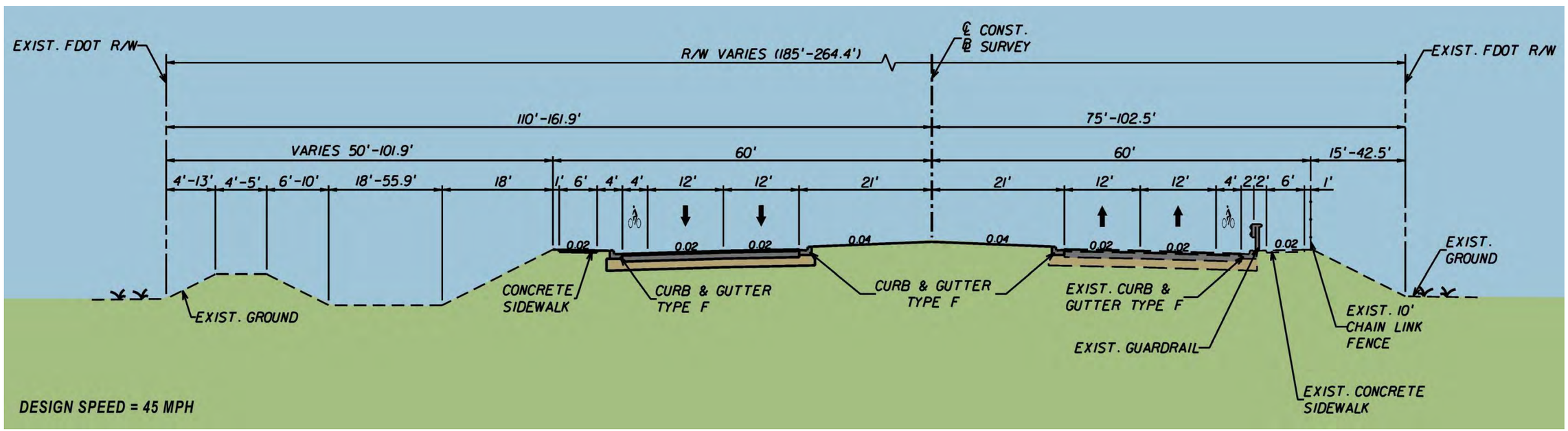

Figure 3-9: Existing Typical Section - Madrid Street to 40th Street

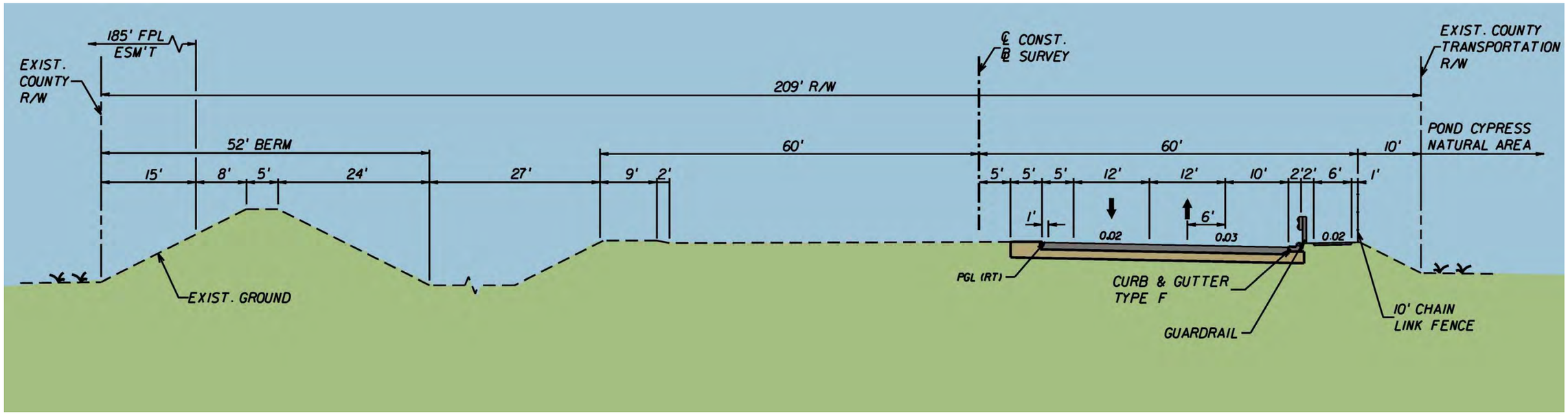

Figure 3-10: Proposed Typical Section – Madrid Street to 40th Street

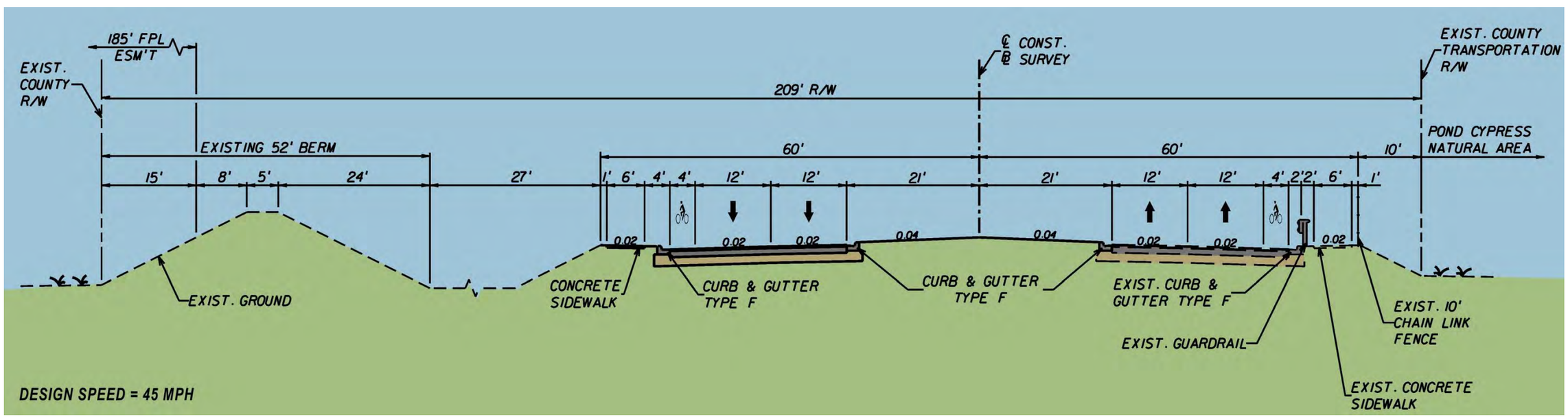

Figure 3-11: Existing Typical Section-Parallel to the Acreage

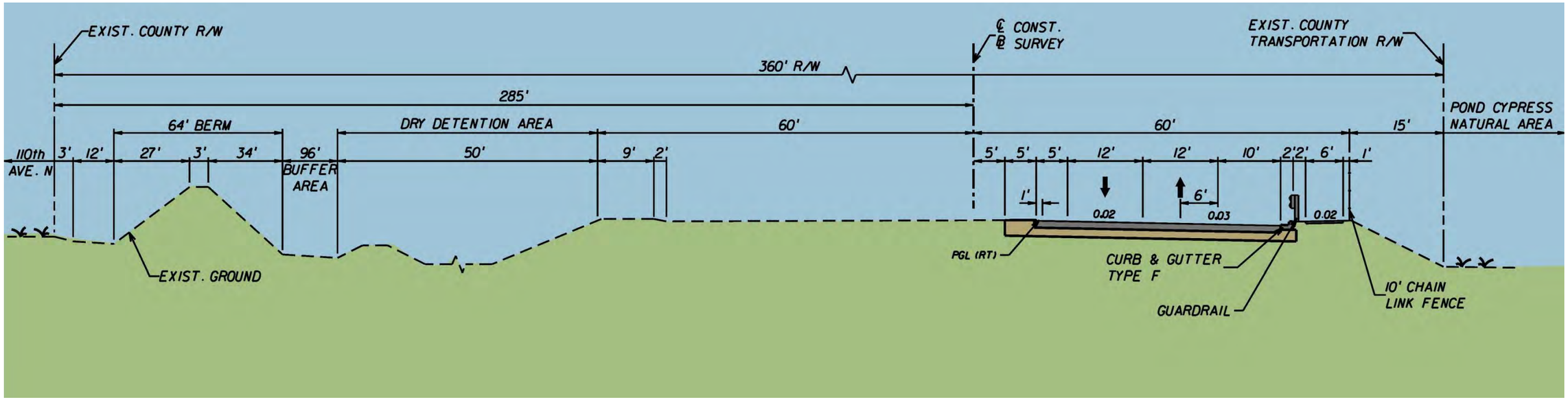

Figure 3-12: Proposed Typical Section-Parallel to the Acreage

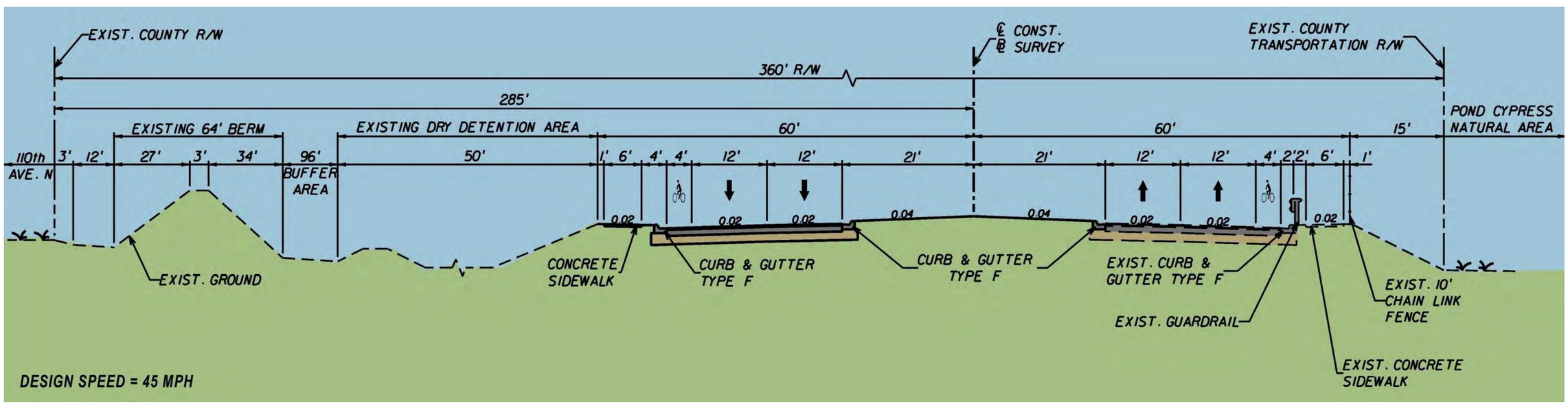

3.2.3.2 SEGMENT 2

Segment 2 extends from 60th Street to Northlake Boulevard where a new four lane divided facility is proposed. The available right of way along the south bank of the M-Canal varies between 78 and 367 feet and the right of way north of the M-Canal varies between 200 and 320 feet. The project would require additional right of way along the M-Canal where there is only 78 feet available, located along the AM tower site property.

The future 2040 volumes along Segment 2 will range from 21,600 to 22,800 vehicles per day. Additional information is provided within the Design Traffic Technical Memorandum. The level of service at the intersections is presented in the following sections.

Three Build Alternatives were presented during the Public Hearing within Segment 2 and are identified as the West, Center, and East Alignment Alternatives. After the Public Hearing and through coordination with the permitting agencies, the West Alignment Alternative was modified and selected as the Preferred Alternative to minimize potential wetland and habitat impacts. Further discussion of each alignment alternative and corresponding typical sections is provided in the following sections.

West Alignment Alternative

From 60th Street, the alignment proceeds along the south bank of the M-Canal as a new four lane divided facility. The alignment turns north to cross over the M-Canal and re-enters the existing FDOT Rangeline right of way. It then continues along the west side of the existing right of way located between the Ibis Golf and Country Club and the Grassy Waters Preserve (also known as the Water Catchment Area). A linear retention swale and linear pond would be located within the right of way between the proposed roadway and the western limit of the Grassy Waters Preserve. Standard features incorporated into the proposed typical section include 12 foot wide lanes, a 42 foot wide raised median, curb and gutter, four foot wide bicycle lanes, and six foot wide sidewalk on both sides. A 42 foot wide median is proposed to match the typical section within Segment 1 and is based on the footprint and placement of the roadbed by the County for the existing two lane facility from Okeechobee Boulevard to Persimmon Boulevard. Additional discussion regarding the typical section within Segment 1 is provided within **Section 3.2.3.1.** The proposed typical section is provided in **Figures 3-13** through **3-16**.

Figure 3-13: Proposed Typical Section-West Alignment, Parallel to the M-Canal

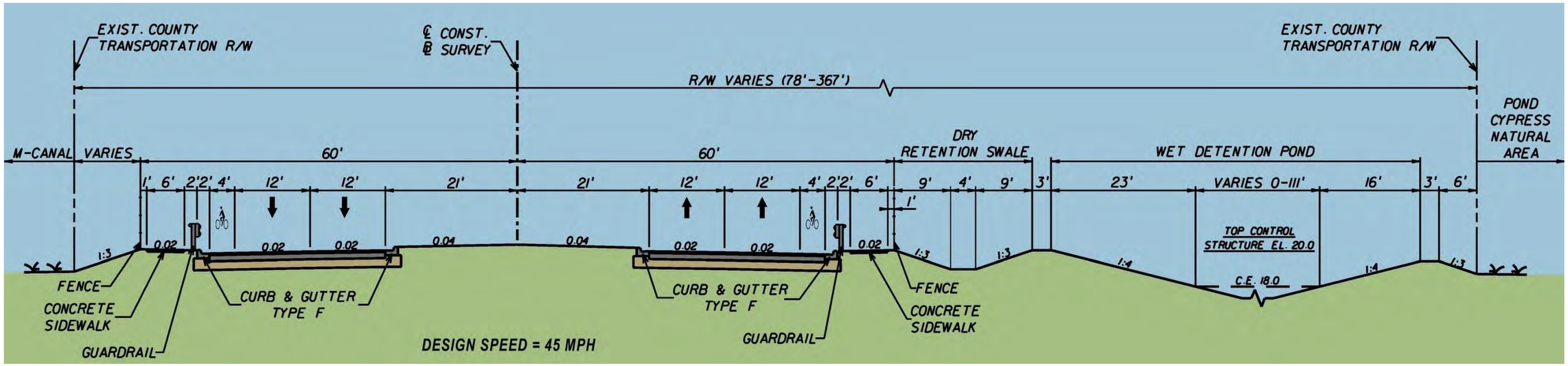

Figure 3-14: Proposed Typical Section-West Alignment, Bridge over M-Canal

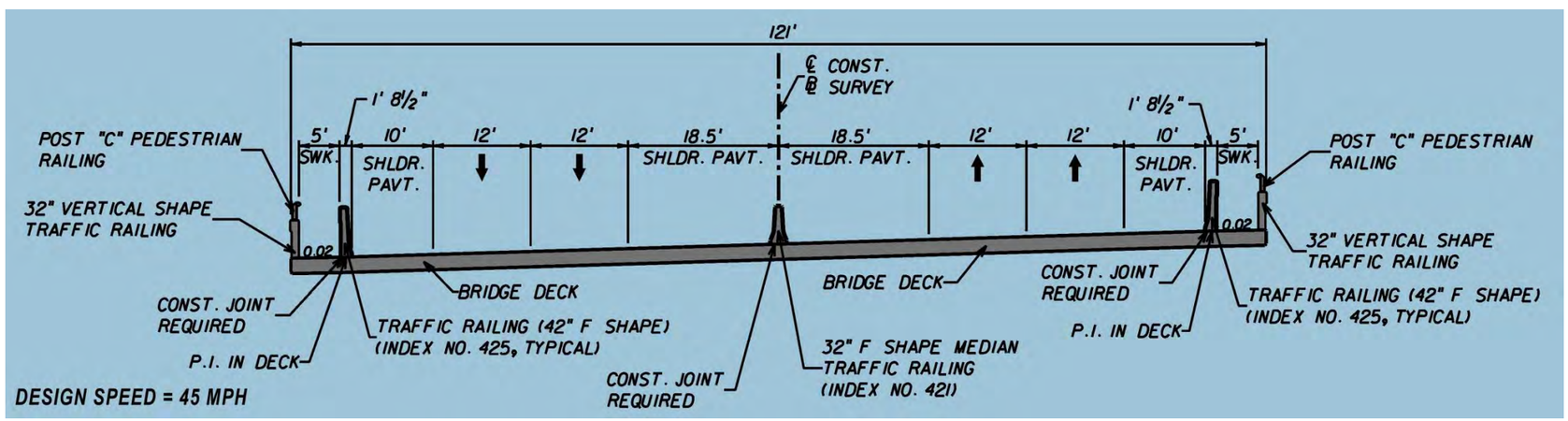

Figure 3-15: Proposed Typical Section-West Alignment, Parallel to the Ibis Preserve

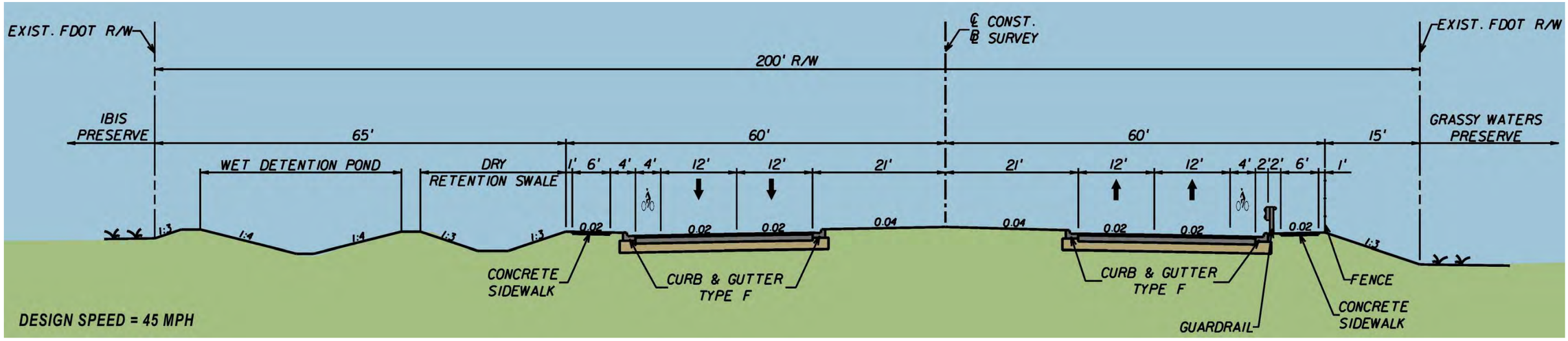

Figure 3-16: Proposed Typical Section-West Alignment, Parallel to Ibis

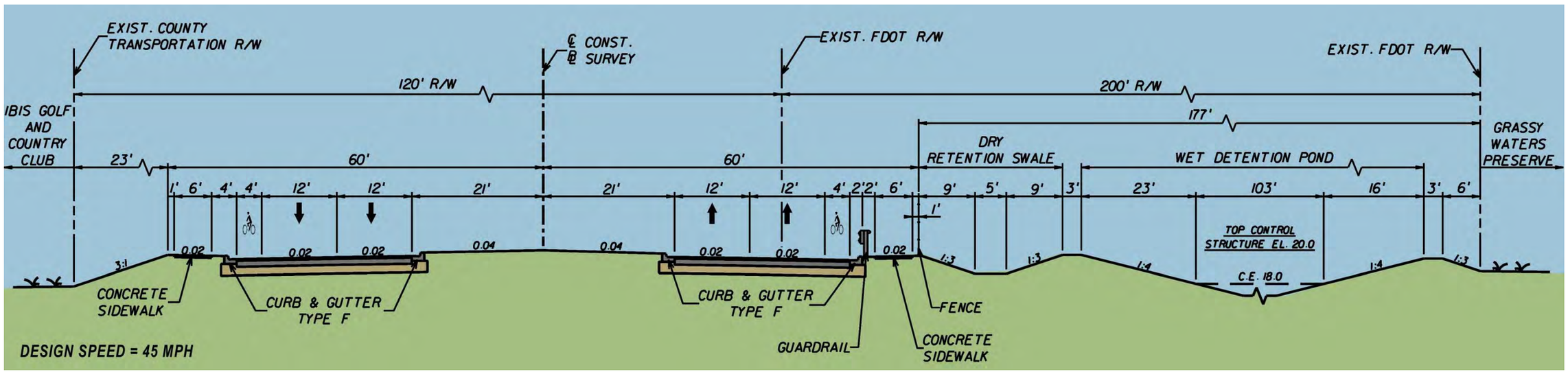

Additional information and findings related to the West Alignment within Segment 2 include the following:

- FDOT design standards were followed in the development of the typical sections and concept plans. This included the latest FDOT Plans Preparation Manual.

- The alignment is generally located within County or FDOT right of way. However, approximately 1.3 acres of right of way from an AM tower site may be impacted (**Figure 3-17**). The AM tower site is located along the south bank of the M-Canal and is owned by American Tower Corporation. There are five AM towers within the property. Radiating from each tower are underground wires that are critical for the operation of the AM signal. The proposed alignment would encroach within this radial field. Through coordination with the American Tower Corporation, these underground wires would be monitored and adjusted during construction to avoid impacts to the tower operation. Further coordination would be needed during the design phase of the project. The cost estimate related to this right of way need is $983,095.

- A two span bridge is proposed over the M-Canal with 12 feet of clearance over mean high water. The proposed typical section for the bridge is provided within **Figure 3-14**. The bridge crossing would also serve as a wildlife crossing between the two natural areas. Specific design requirements would be developed during the design phase.

- The use of a 42 inch F Shape traffic railing (TL-5 rated) on the bridge would be most appropriate due to the sensitivity of the M-Canal. This type of railing has been tested for impact against a loaded 18-wheel truck and is the railing with the highest performance rating available from the FDOT. According to the FDOT Structures Design Guidelines, a TL-5 traffic railing should be considered when a vehicle penetrating or overtopping the traffic railing would cause high risk to the public or surrounding facilities.

- A linear retention swale and linear pond would be located within the right of way between the proposed roadway and the western limit of the Grassy Waters Preserve. A potential outfall is proposed within the lake system of the Ibis community. This lake system is managed and maintained by the Northern Palm Beach County Improvement District. If the linear swale is located along the eastern boundary, then water will be piped underneath the roadway and into the Ibis lake system as permitted. As a secondary option, FDOT will coordinate with the County to determine other potential outfall locations. If necessary, this would be documented for the Preferred Alternative if the Build Alternative is selected. South Florida Water Management District regulations regarding drainage basins will be followed in order to meet State Water Quality Standards. Drainage details are provided within the Pond Siting Report.

Figure 3-17: AM Tower Site

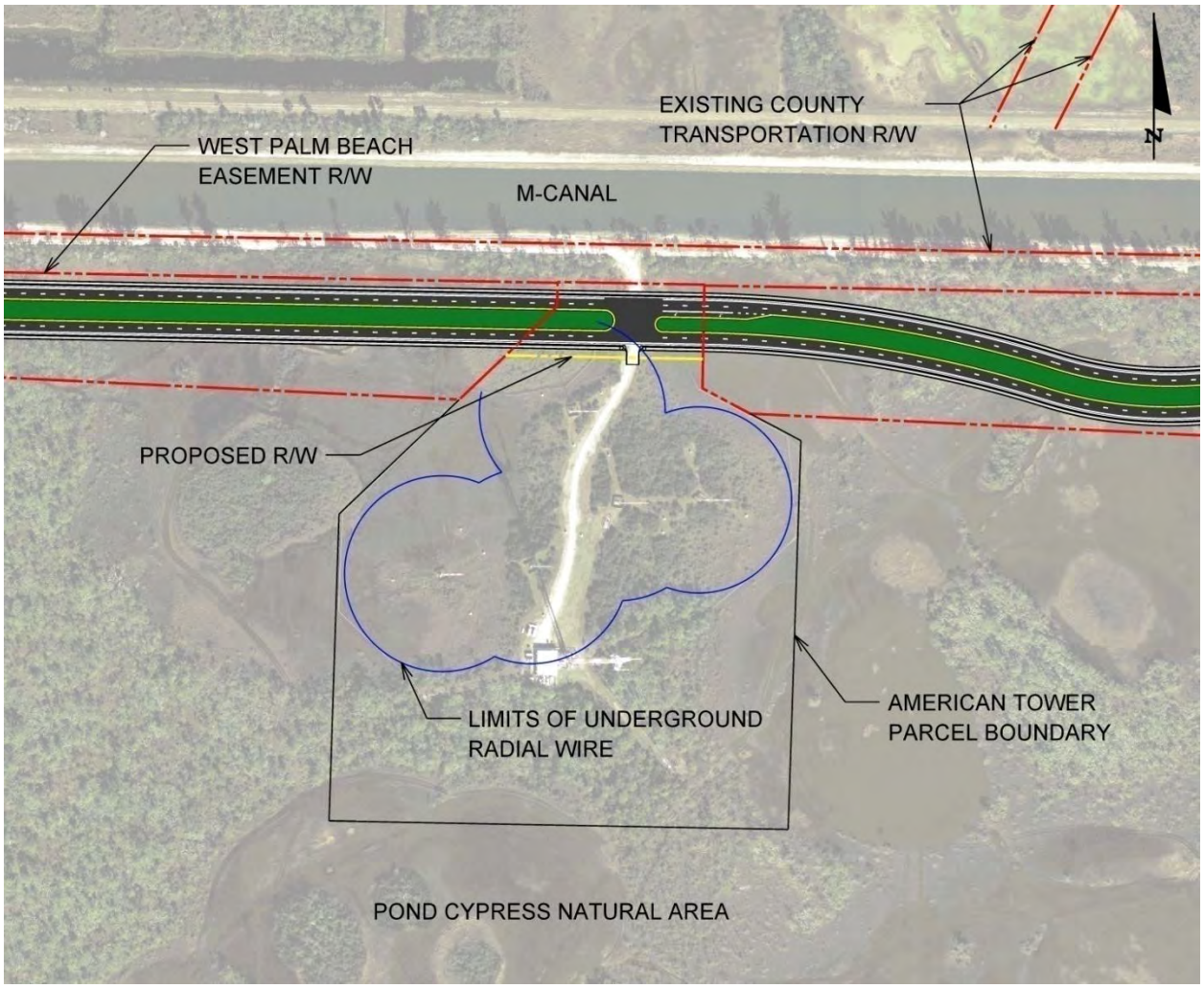

- Access to the Amli Apartments near Northlake Boulevard would be modified from full access to right-in/right-out access. A directional median opening would be provided at the rear entrance of the Ibis Shops.

- Although this segment involves new construction, some maintenance of traffic would be needed between the entrance to the Ibis Golf and Country Club and Northlake Boulevard where an existing two lane County roadway exists.

- A signalized T-intersection is proposed at Northlake Boulevard as shown in **Figure 3-18**. No additional right of way for the intersection would be needed from the Loxahatchee Slough or Grassy Waters Preserve. Based on the Design Traffic Technical Memorandum, the intersection at Northlake Boulevard is anticipated to operate at a level of service D by 2040.

Figure 3-18: T-Intersection at Northlake Boulevard

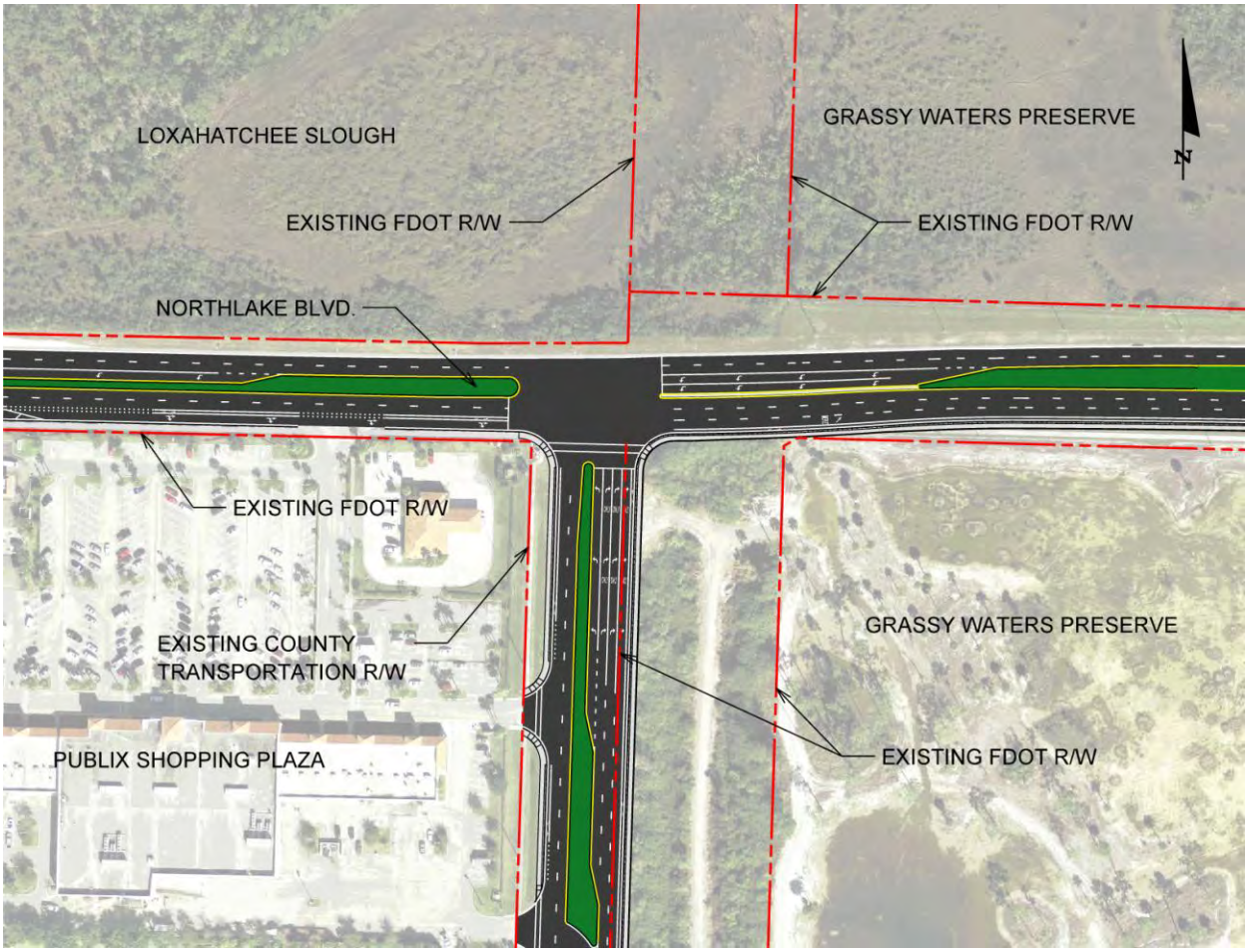

- The environmental impacts associated with the West Alignment include wetland impacts of approximately 114.5 acres. The proposed project is not likely to adversely affect the existence of any threatened or endangered species, even though some are known or expected to occur in the study area. Additional information related to potential environmental impacts is provided within **Chapter 4**.

- The estimated construction cost for a new four lane divided facility along the West Alignment is $42,199,934. This estimate does not include wetland mitigation costs.

After the Public Hearing, the West Alignment Alternative was modified (**Figure 3-19**) to minimize impacts to wetlands and natural habitats. Under this option and similar to the West Alignment Alternative, the roadway would be located adjacent to the Ibis Golf and Country Club, and the drainage treatment swales would be located between the roadway and the western boundary of the Grassy Waters Preserve. The difference is that the median width was reduced from 42 feet to 22 feet and drainage treatment swales were re-sized to meet South Florida Water Management District standards plus capacity for 50 percent additional treatment. The combination of this minimization effort reduced the overall typical section from 320 feet wide to 150 feet wide. This leaves approximately 170 feet of right of way between the roadway and the Grassy Waters Preserve untouched; an area equal to approximately 56 acres in size. Typical sections for the Preferred Alternative (a modified version of the West Alignment Alternative) are provided within **Appendix J**. The impacts associated with the modified version of the West Alignment Alternative include wetland impacts of approximately 52.9 acres. This represents a 54% reduction when compared to the West Alignment Alternative. The estimated construction cost for the Preferred Alternative is $32,787,623. This estimate does not include wetland mitigation costs.

Figure 3-19: Proposed Typical Section-Modified West Alignment, Parallel to Ibis

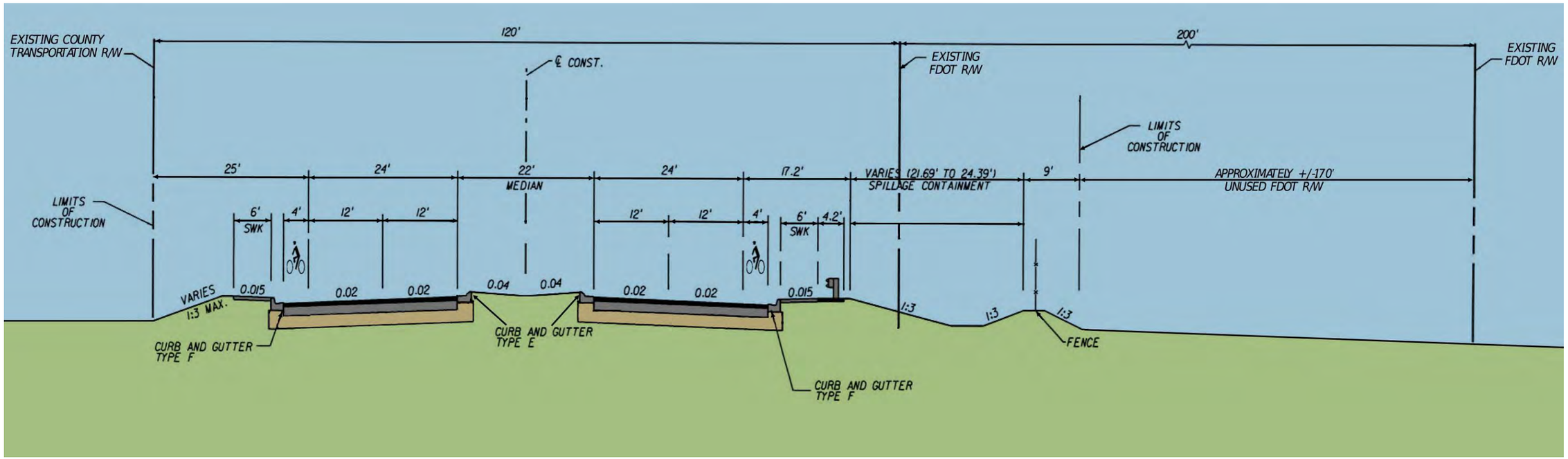

Center Alignment Alternative

From 60th Street, the alignment proceeds along the south bank of the M-Canal as a new four lane divided facility. The alignment turns north to cross over the M-Canal and re-enters the existing FDOT Rangeline right of way. It then continues near the center of the existing right of way located between the Ibis Golf and Country Club and the Grassy Waters Preserve. A linear pond would be located along the west side of the roadway and a linear retention swale would be located along the east side of the roadway within the existing right of way. Standard features incorporated into the proposed typical section include 12 foot wide lanes, a 42 foot wide raised median, curb and gutter, four foot wide bicycle lanes and six foot wide sidewalk on both sides. A 42 foot wide median is proposed to match the typical section within Segment 1 and is based on the footprint and placement of the roadbed by the County for the existing two lane facility from Okeechobee Boulevard to Persimmon Boulevard. Additional discussion regarding the typical section within Segment 1 is provided within **Section 3.2.3.1.** The proposed typical section is provided in **Figures 3-20** through **3-23**.

Additional information related to the Center Alignment within Segment 2 includes the following:

- FDOT design standards were followed in the development of the typical sections and concept plans. This included the latest FDOT Plans Preparation Manual.

- The alignment is generally located within County or FDOT right of way. However, approximately 1.3 acres of right of way from an AM tower site may be impacted (**Figure 3-17**). The AM tower site is located along the south bank of the M-Canal and is owned by American Tower Corporation. There are five AM towers within the property. Radiating from each tower are underground wires that are critical for the operation of the AM signal. The proposed alignment would encroach within this radial field. Through coordination with the American Tower Corporation, these underground wires would be monitored and adjusted during construction to avoid impacts to the tower operation. Further coordination would be needed during the design phase of the project. The cost estimate related to this right of way need is $983,095.

- A two span bridge is proposed over the M-Canal with 12 feet of clearance over mean high water. The proposed typical section for the bridge is provided within **Figure 3-21**. The bridge crossing would also serve as a wildlife crossing between the two natural areas. Specific design requirements would be developed during the design phase.

- The use of a 42 inch F Shape traffic railing (TL-5 rated) on the bridge would be most appropriate due to the sensitivity of the M-Canal. This type of railing has been tested for impact against a loaded 18-wheel truck and is the railing with the highest performance rating available from the FDOT. According to the FDOT Structures Design Guidelines, a TL-5 traffic railing should be considered when a

vehicle penetrating or overtopping the traffic railing would cause high risk to the public or surrounding facilities.

- A linear pond would be located within the right of way along the west side of the proposed roadway and a linear retention swale would be located within the right of way along the east side of the roadway. A potential outfall is proposed within the lake system of the Ibis community. This lake system is managed and maintained by the Northern Palm Beach County Improvement District. As a secondary option, FDOT will coordinate with the County to determine other potential outfall locations. If necessary, this would be documented for the Preferred Alternative if the Build Alternative is selected. South Florida Water Management District regulations regarding drainage basins will be followed in order to meet State Water Quality Standards. Drainage details are provided within the Pond Siting Report.

- Access to the Amli Apartments near Northlake Boulevard would be modified from full access to right-in/right-out access. A directional median opening would be provided at the rear entrance of the Ibis Shops.

- Although this segment involves new construction, some maintenance of traffic would be needed between the entrance to the Ibis Golf and Country Club and Northlake Boulevard where an existing two lane County roadway exists.

- A signalized T-intersection is proposed at Northlake Boulevard as shown in **Figure 3-18**. No additional right of way for the intersection would be needed from the Loxahatchee Slough or Grassy Waters Preserve. Based on the Design Traffic Technical Memorandum, the intersection at Northlake Boulevard is anticipated to operate at a level of service D by 2040.

- The environmental impacts associated with the Center Alignment include wetland impacts of approximately 114.5 acres. The proposed project is not likely to adversely affect the existence of any threatened or endangered species, even though some are known or expected to occur in the study area. Additional information related to potential environmental impacts is provided within **Chapter 4**.

- The estimated construction cost for a new four lane divided facility along the Center Alignment is $42,199,934. This estimate does not include wetland mitigation costs.

Figure 3-20: Proposed Typical Section-Center Alignment, Parallel to the M-Canal

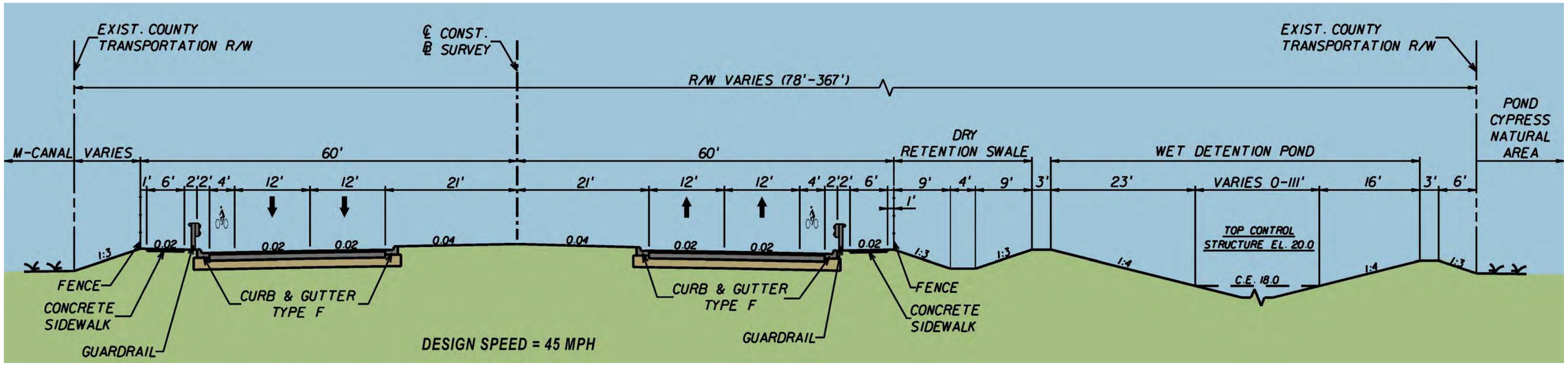

Figure 3-21: Proposed Typical Section-Center Alignment, Bridge over M-Canal

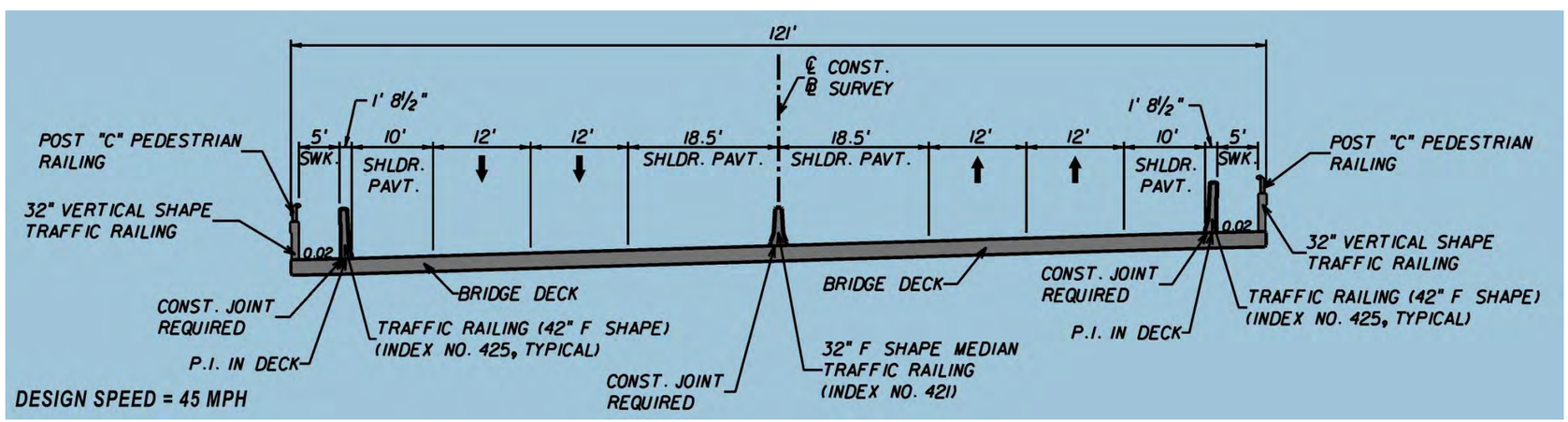

Figure 3-22: Proposed Typical Section-Center Alignment, Parallel to the Ibis Preserve

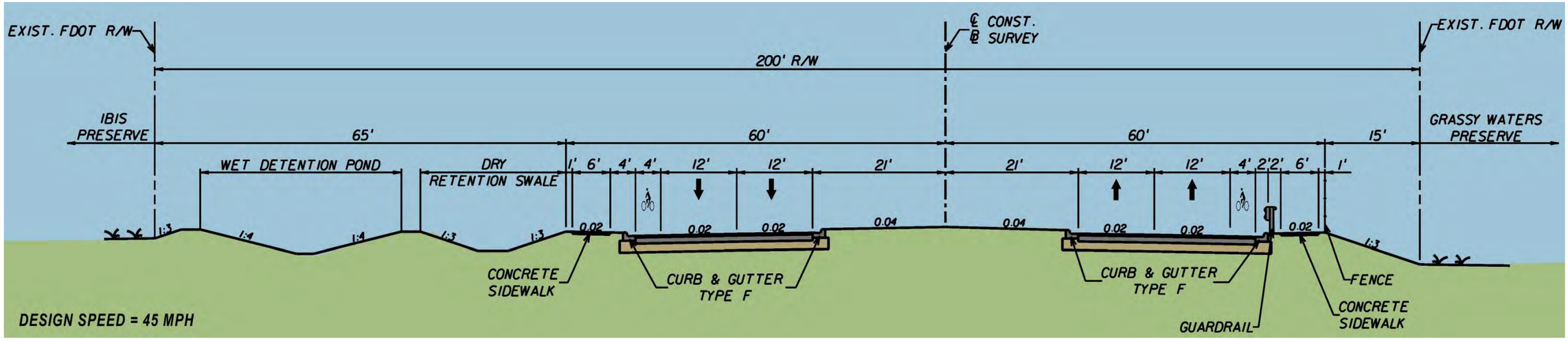

Figure 3-23: Proposed Typical Section-Center Alignment, Parallel to Ibis

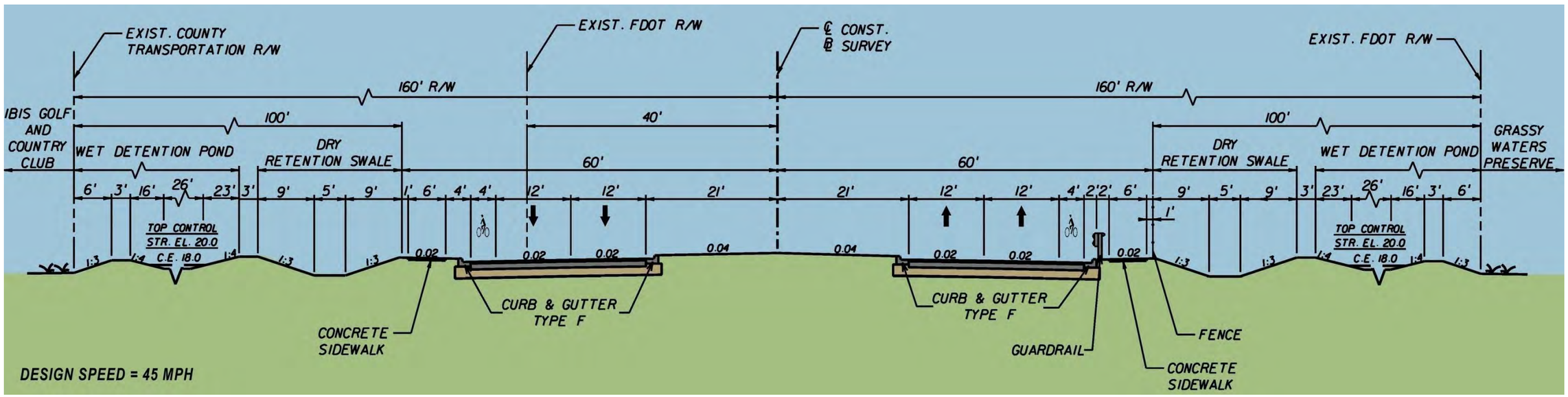

East Alignment Alternative

From 60th Street, the alignment proceeds along the south bank of the M-Canal as a new four lane divided facility. The alignment turns north to cross over the M-Canal and re-enters the existing FDOT Rangeline right of way. It then continues along the east side of the existing right of way located between the Ibis Golf and Country Club and the Grassy Waters Preserve. A linear retention swale and linear pond would be located within the right of way between the Ibis Golf and Country Club and the proposed roadway. Standard features incorporated into the proposed typical section include 12 foot wide lanes, a 42 foot wide raised median, curb and gutter, four foot wide bicycle lanes and six foot wide sidewalk on both sides. A 42 foot wide median is proposed to match the typical section within Segment 1 and is based on the footprint and placement of the roadbed by the County for the existing two lane facility from Okeechobee Boulevard to Persimmon Boulevard. Additional discussion regarding the typical section within Segment 1 is provided within **Section 3.2.3.1.** The proposed typical section is provided in **Figures 3-24** through **3-27**.

Additional information related to the East Alignment within Segment 2 includes the following:

- FDOT design standards were followed in the development of the typical sections and concept plans. This included the latest FDOT Plans Preparation Manual.

- The alignment is generally located within County or FDOT right of way. However, approximately 1.3 acres of right of way from an AM tower site may be impacted (**Figure 3-17**). The AM tower site is located along the south bank of the M-Canal and is owned by American Tower Corporation. There are five AM towers within the property. Radiating from each tower are underground wires that are critical for the operation of the AM signal. The proposed alignment would encroach within this radial field. Through coordination with the American Tower Corporation, these underground wires would be monitored and adjusted during construction to avoid impacts to the tower operation. Further coordination would be needed during the design phase of the project. The cost estimate related to this right of way need is $983,095.

- A two span bridge is proposed over the M-Canal with 12 feet of clearance over mean high water. The proposed typical section for the bridge is provided within **Figure 3-25**. The bridge crossing would also serve as a wildlife crossing between the two natural areas. Specific design requirements would be developed during the design phase.

- The use of a 42 inch F Shape traffic railing (TL-5 rated) on the bridge would be most appropriate due to the sensitivity of the M-Canal. This type of railing has been tested for impact against a loaded 18-wheel truck and is the railing with the highest performance rating available from the FDOT. According to the FDOT Structures Design Guidelines, a TL-5 traffic railing should be considered when a

vehicle penetrating or overtopping the traffic railing would cause high risk to the public or surrounding facilities.

- A linear retention swale and linear pond would be located within the right of way between the proposed roadway and the eastern limit of the Ibis Golf and Country Club. A potential outfall is proposed within the lake system of the Ibis community. This lake system is managed and maintained by the Northern Palm Beach County Improvement District. As a secondary option, FDOT will coordinate with the County to determine other potential outfall locations. If necessary, this would be documented for the Preferred Alternative if the Build Alternative is selected. South Florida Water Management District regulations regarding drainage basins will be followed in order to meet State Water Quality Standards. Drainage details are provided within the Pond Siting Report.

- Access to the Amli Apartments near Northlake Boulevard would be modified from full access to right-in/right-out access. A directional median opening would be provided at the rear entrance of the Ibis Shops.

- Although this segment involves new construction, some maintenance of traffic would be needed between the entrance to the Ibis Golf and Country Club and Northlake Boulevard where an existing two lane County roadway exists.

- A signalized T-intersection is proposed at Northlake Boulevard as shown in **Figure 3-18**. No additional right of way for the intersection would be needed from the Loxahatchee Slough or Grassy Waters Preserve. Based on the Design Traffic Technical Memorandum, the intersection at Northlake Boulevard is anticipated to operate at a level of service D by 2040.

- The environmental impacts associated with the East Alignment include wetland impacts of approximately 114.5 acres. The proposed project is not likely to adversely affect the existence of any threatened or endangered species, even though some are known or expected to occur in the study area. Additional information related to potential environmental impacts is provided within **Chapter 4**.

- The estimated construction cost for a new four lane divided facility along the East Alignment is $42,199,934. This estimate does not include wetland mitigation costs.

Figure 3-24: Proposed Typical Section-East Alignment, Parallel to the M-Canal

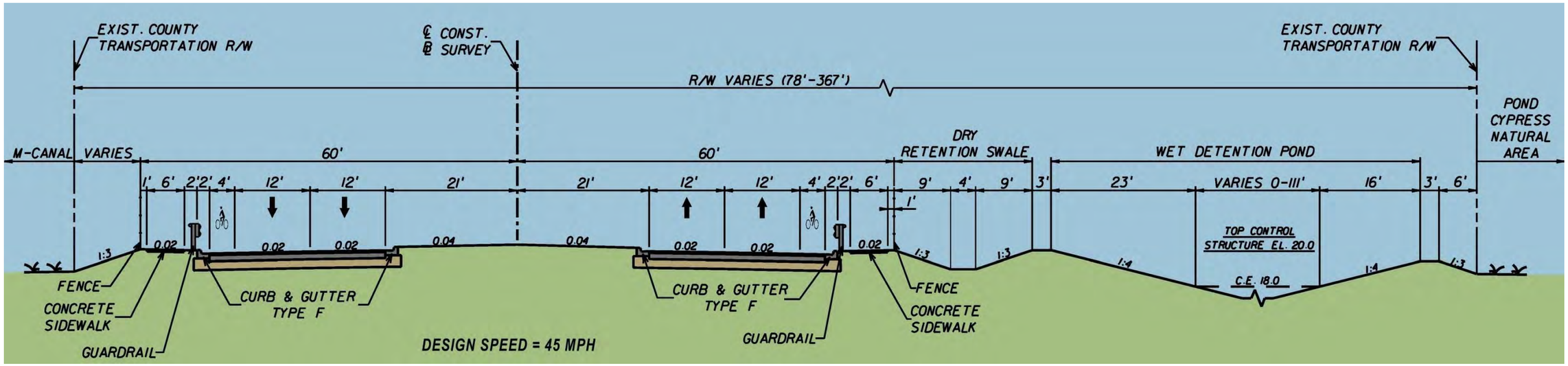

Figure 3-25: Proposed Typical Section-East Alignment, Bridge over M-Canal

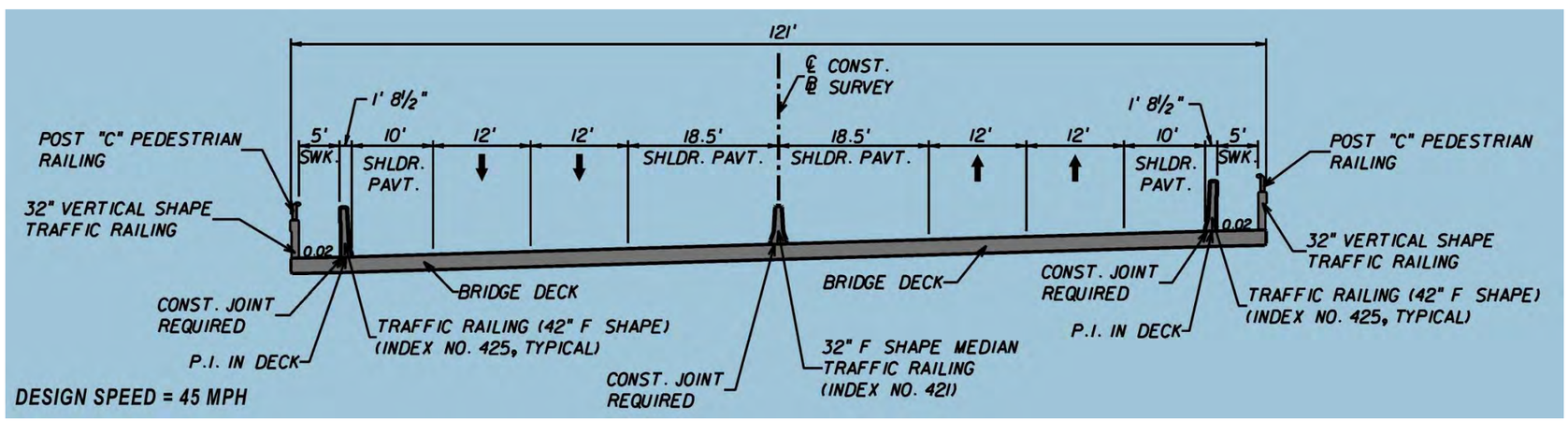

Figure 3-26: Proposed Typical Section-East Alignment, Parallel to the Ibis Preserve

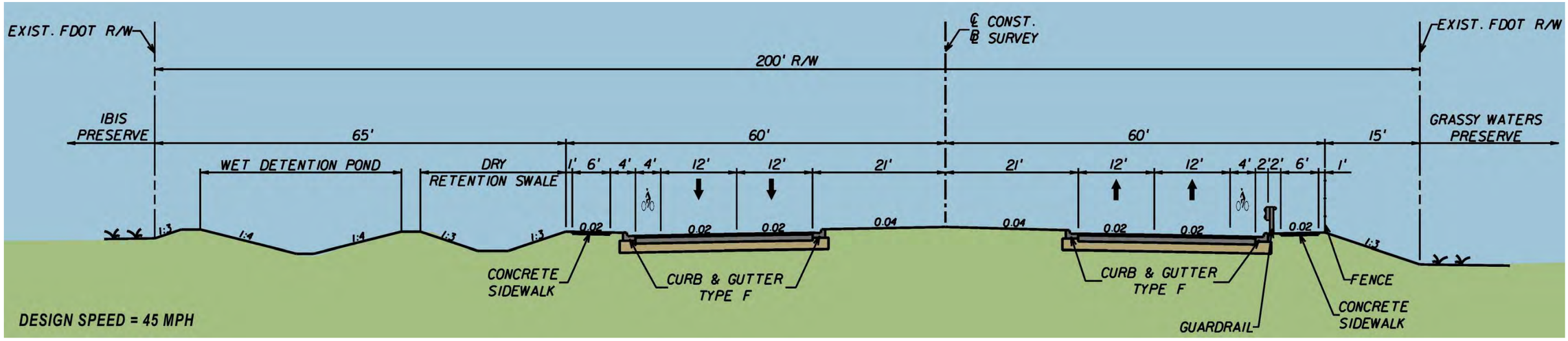

Figure 3-27: Proposed Typical Section-East Alignment, Parallel to Ibis

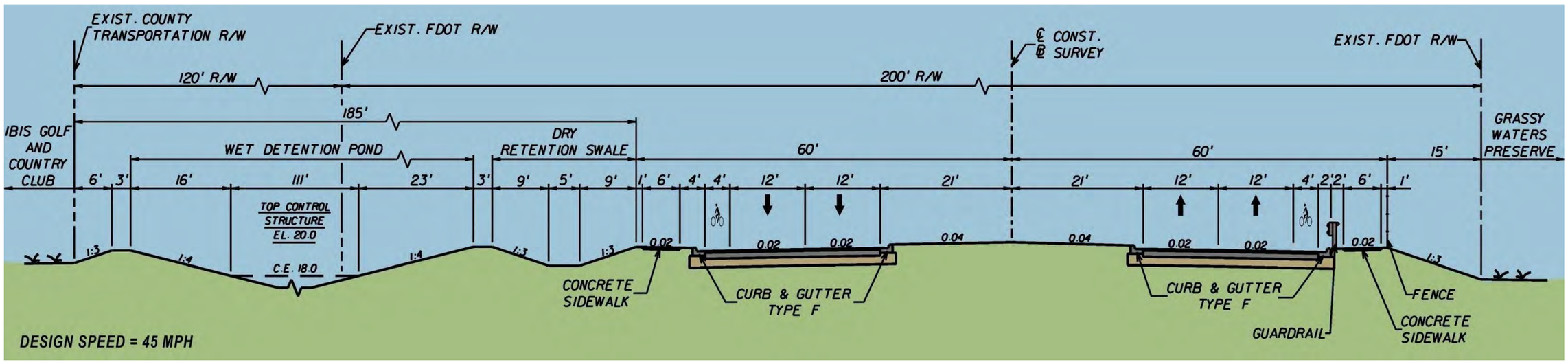

3.2.3.3 SHARED-USE PATH OPTION

As an alternative to standard sidewalk on both sides of the roadway, a shared-use path is presented as an option for consideration and as a benefit to the community. Under this scenario, sidewalk on both sides would be maintained within Segment 1 from Okeechobee Boulevard to 60th Street. From 60th Street, a 12 foot wide shared use path would commence along the south side of the roadway and continue up to Northlake Boulevard. North of the M-Canal, the shared-use path would be located along the east side of the roadway. This option also includes the use of a separate pedestrian bridge to carry the shared-use path over the M-Canal. No sidewalk would be provided along the west side of the roadway except between the entrance to the Ibis community and Northlake Boulevard.

Figure 3-28 illustrates the sidewalk and shared-use path configuration under this option. **Figure 3-29** provides a typical section of the proposed roadway with a shared-use path. The Center Alignment Alternative is used in the typical section for demonstrative purposes only. The shared use path option may be used with all of the Alignment Alternatives. **Figure 3-30** provides a typical section of the bridge crossing with a separate pedestrian bridge.

This option was considered through the Public Hearing but was later eliminated through coordination with the permitting agencies as part of an effort to reduce the project footprint.

Figure 3-28: Sidewalk and Shared-Use Path Configuration

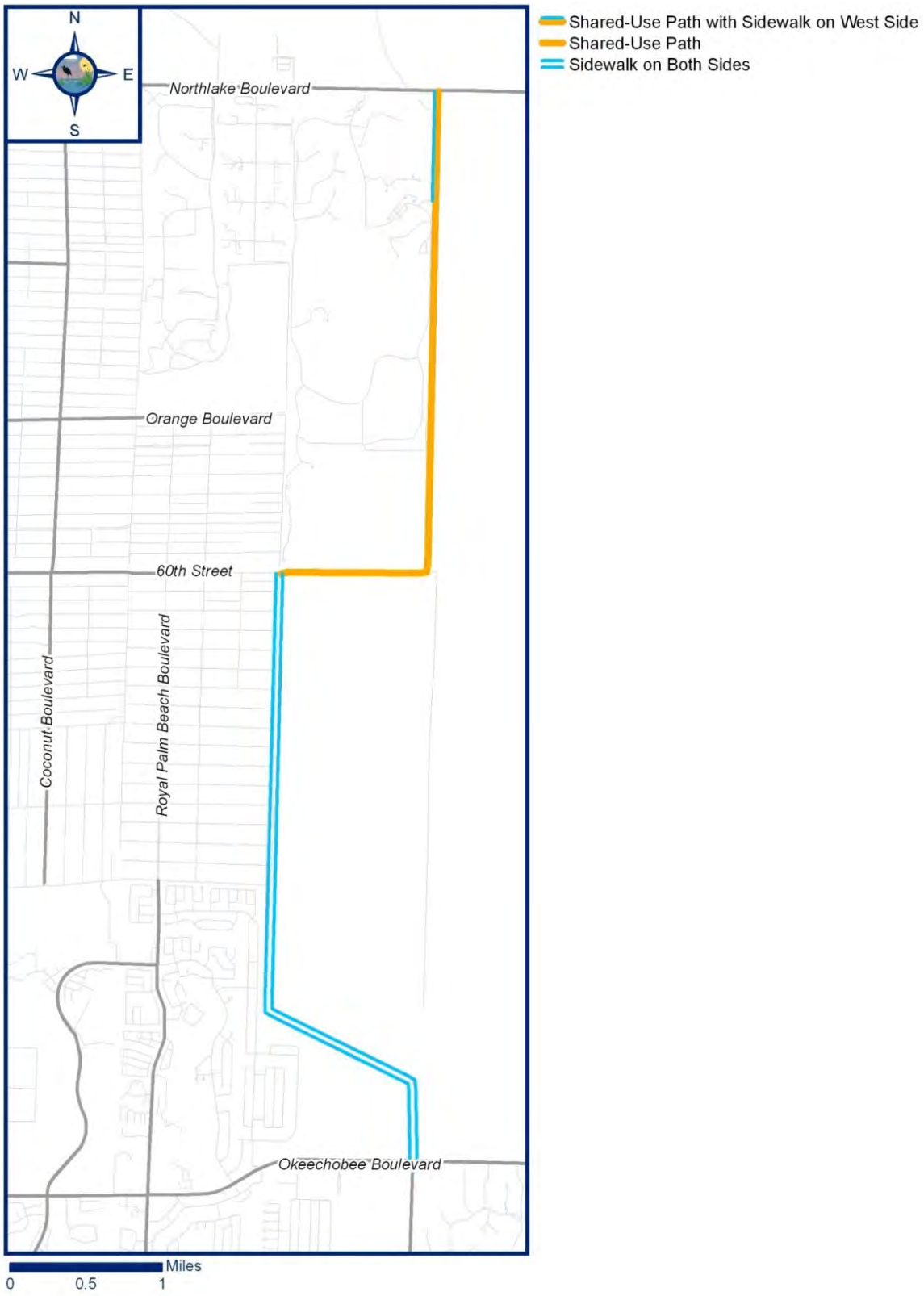

Figure 3-29: Proposed Roadway with a Shared-Use Path

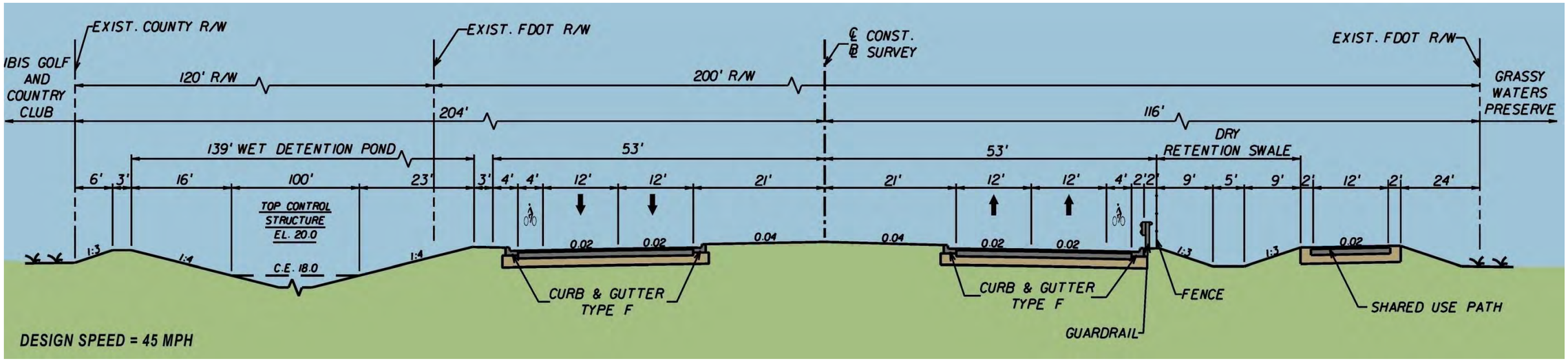

Figure 3-30: Typical Section of Bridge Crossing with a Separate Pedestrian Bridge

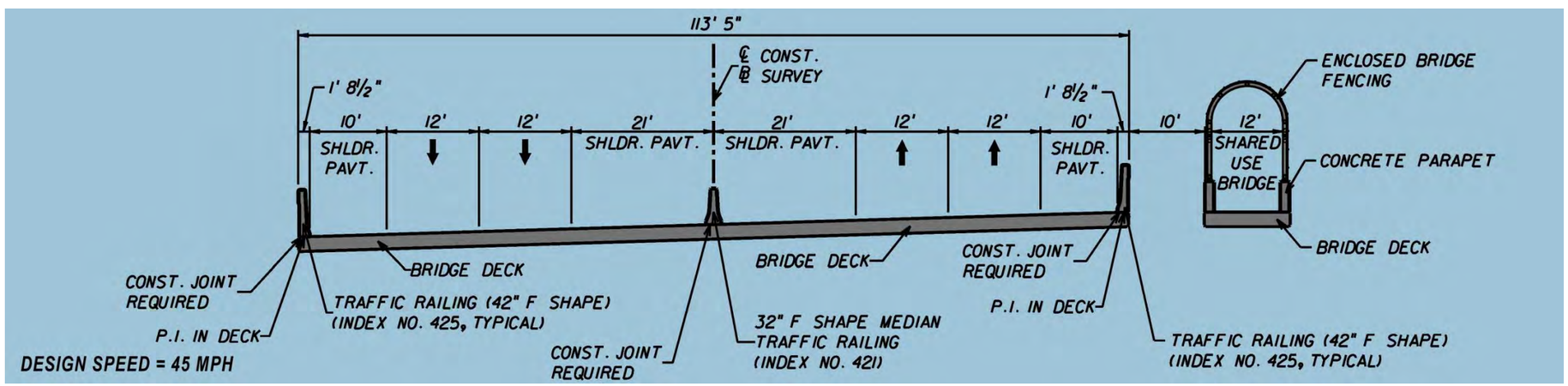

3.2.3.4 INTERSECTION OPTIONS AT OKEECHOBEE BOULEVARD

Two options are proposed for the intersection at Okeechobee Boulevard and SR 7. These options include an at-grade intersection and a grade separated interchange, as illustrated in **Figures 3-31** and **3-32**.

The Design Traffic Technical Memorandum, which was prepared for this project, provides the future 2040 Level of Service for each intersection option. This information is summarized in **Table 3-1** below.

Table 3-1: Future 2040 Level of Service at Okeechobee Boulevard

Intersection Option	Level of Service (LOS)
Okeechobee Boulevard At-Grade	F
Okeechobee Boulevard Grade Separated	E

At-Grade Intersection Option

Under the at-grade intersection option (**Figure 3-31**), the configuration of the intersection would remain unchanged with the same number of turning and through lanes as provided today. Recently, this intersection was fully expanded by Palm Beach County as part of the widening of Okeechobee Boulevard from six to eight lanes. The current configuration at the intersection makes any future at-grade improvements unlikely.

Figure 3-31: Okeechobee Boulevard with At-Grade Intersection

Additional information related to this option includes the following:

- The northbound approach along SR 7 would include three left turn lanes, two through lanes, and two right turn lanes.
- The southbound approach along SR 7 would include two left turn lanes, three through lanes, and one right turn lane.
- The eastbound approach along Okeechobee Boulevard would include two left turn lanes, four through lanes, and two right turn lanes.
- The westbound approach along Okeechobee Blvd would include three left turn lanes, four through lanes, and a single right turn lane.
- No environmental impacts are associated with the at-grade intersection option as this option does not propose any changes to the existing configuration. Additional information related to potential environmental impacts is provided within **Chapter 4**.

- The at-grade intersection option would not require the need for more right of way.
- There is no cost associated with this option since it does not propose any changes to the existing at-grade intersection.

Grade Separated Interchange Option

Under the grade separated interchange option (**Figure 3-32**), the through movement along Okeechobee Boulevard would be elevated over SR 7.

Figure 3-32: Okeechobee Boulevard Intersection with Grade Separated Interchange

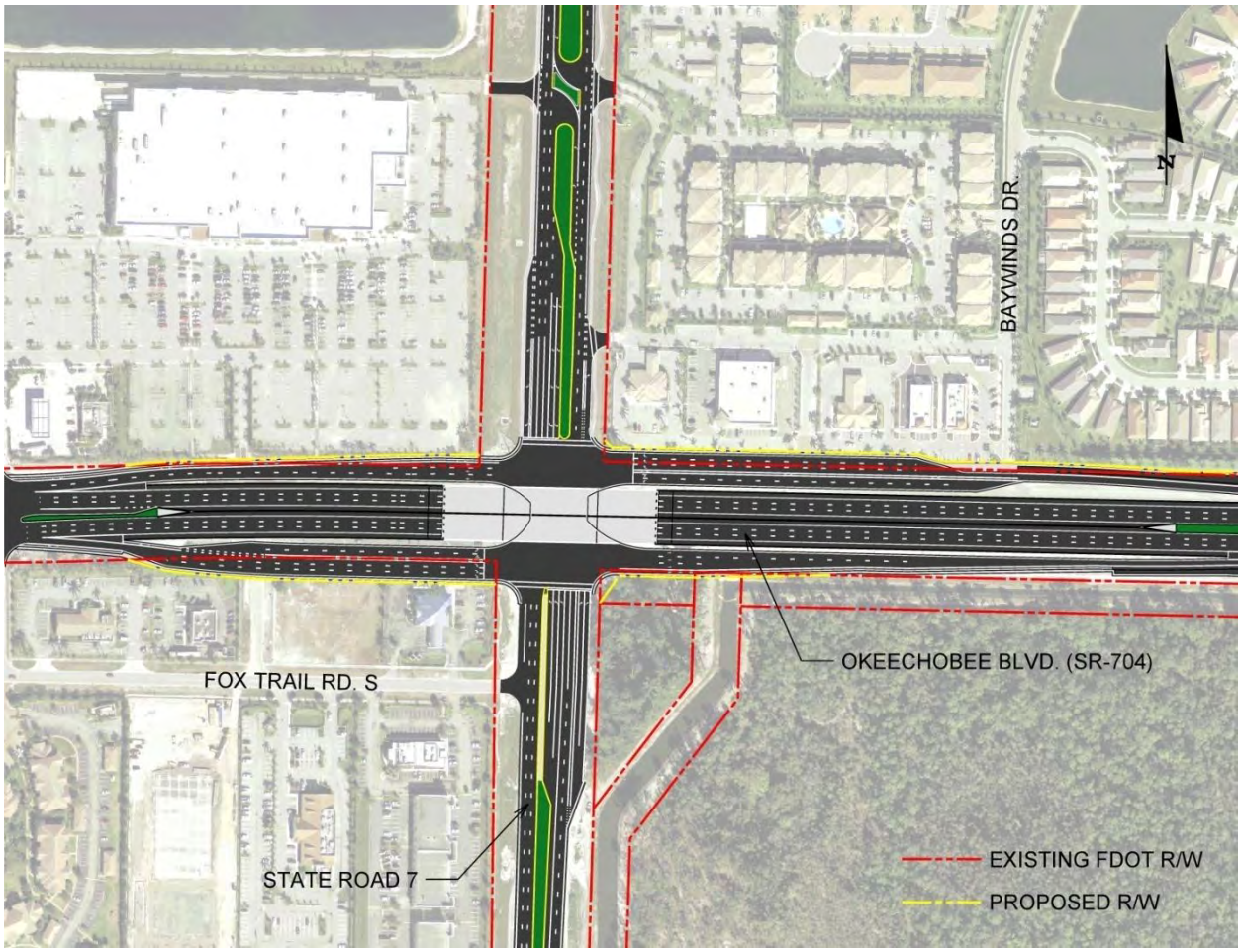

Additional information related to this option includes the following:

- The Okeechobee mainline bridge over SR 7 would include three 12 foot wide lanes in each direction with 10 foot wide shoulders on each side separated by a 22 foot wide traffic separator.
- The eastbound off-ramp would include one dedicated 12 foot wide left turn lane, a shared 12 foot wide left and through lane, a five foot wide bicycle lane, and three 12 foot wide right turn lanes.
- The east bound on-ramp would include three 12 foot wide lanes that ultimately merge into one lane.

- The westbound off-ramp would include one dedicated 12 foot wide left turn lane, a shared 12 foot wide left and through lane, a five foot wide bicycle lane, and three 12 foot wide right turn lanes.

- The westbound on-ramp would include three 12 foot wide lanes that ultimately merge into one lane. The lane configuration along SR 7 would remain as proposed under the at-grade alternative.

- Approximately two acres of right of way distributed across 14 parcels would be needed to accommodate a grade separated interchange. The need for this additional right of way would also impact seven businesses. The estimated right of way cost associated with these impacts is approximately $1.6 million. This is a preliminary estimate that would require additional analysis. It does not include any business damages. Additional details related to potential property impacts are provided within **Sections 4.2.2** and **4.6**.

- The addition of a grade separated interchange would modify the access into the Target Shopping Center from westbound Okeechobee Boulevard, requiring drivers to utilize the frontage road system in order to make a right turn into Fox Trail Road.

- There are potential visual and aesthetic impacts associated with the grade separated interchange option at Okeechobee Boulevard as the top of the proposed bridge structure would be elevated by approximately 25 feet above the existing intersection. This structure would block the view for the commercial properties on either side of Okeechobee Boulevard. Additional discussion is provided within **Section 4.10**.

- Potential noise impacts could result from the grade separated interchange option given the proximity of nearby residential receptors within Baywinds and Breakers West.

- The construction cost associated with the grade separated interchange option is approximately $23,508,697.

- Additional analysis was conducted for this intersection and is summarized within **Appendix G**.

3.2.3.5 INTERSECTION OPTIONS AT 60TH STREET

Two options are proposed for the intersection at 60th Street. These options include a roundabout and a signalized T-intersection. If additional improvements are needed in the future, then the roundabout will be reassessed. Both intersection options can be accommodated within the existing right of way, as illustrated in **Figures 3-33** and **3-34**.

The Design Traffic Technical Memorandum, which was prepared for this project, provides the future 2040 Level of Service for each intersection option. This information is summarized in **Table 3-2** below.

Table 3-2: Future 2040 Level of Service at 60th Street

Intersection Option	Level of Service (LOS)
60th Street T-Intersection	C
60th Street Roundabout	B

Roundabout Option

The roundabout option (**Figure 3-33**) would include two circulating lanes except along the east side of the roundabout where only one lane is proposed.

Figure 3-33: 60th Street Intersection with Roundabout

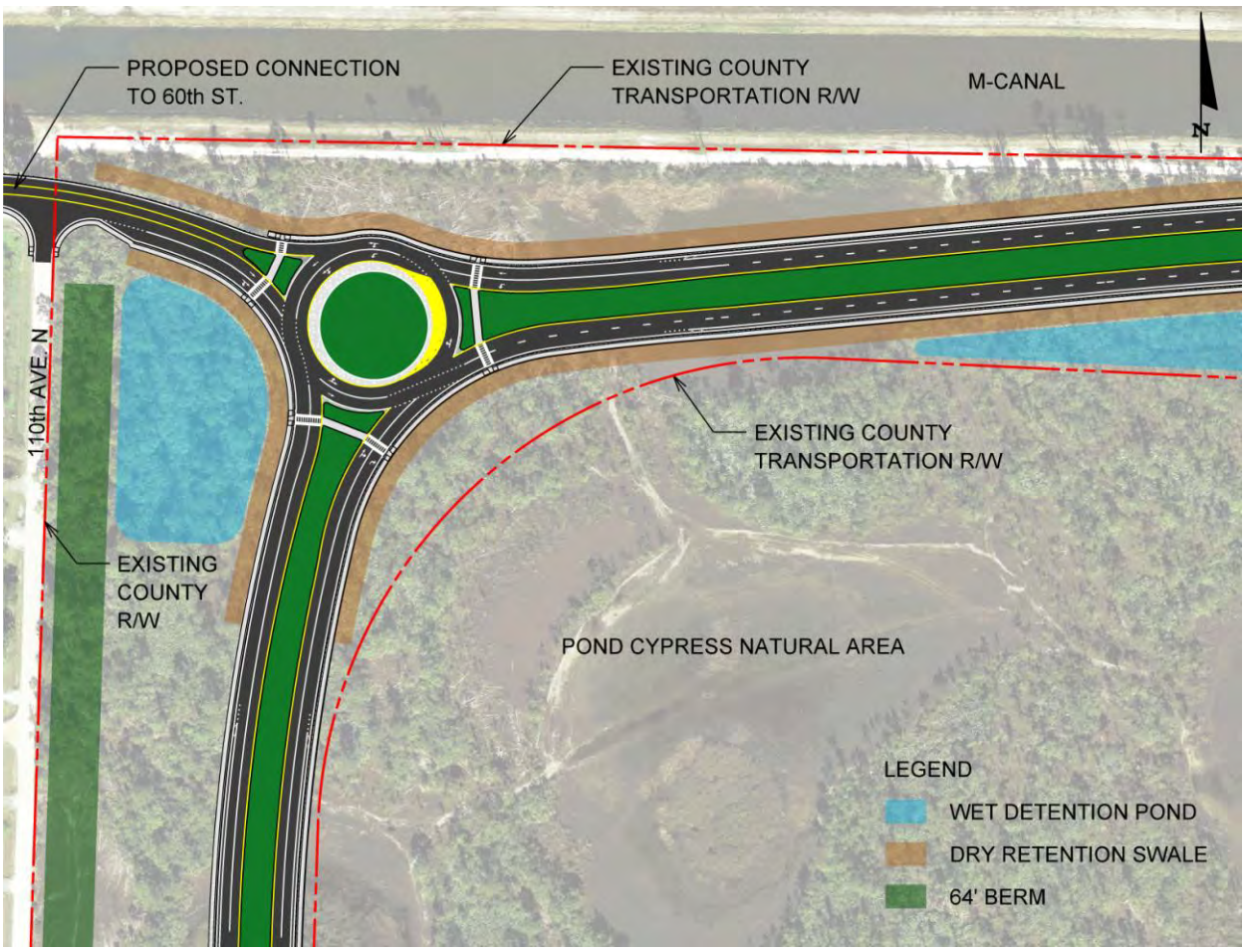

The conceptual design includes the following characteristics:

- Approximately 220 foot wide inscribed circle diameter.
- Truck apron with varying width from six to 15 feet.
- Two 15 foot wide approach lanes on all approaches.
- Fifteen foot wide circulating lanes on the north and south sides.
- Eighteen foot wide circulating lane along the east side.
- Eighteen foot wide circulating outside lane along the west side.

The roundabout option would not result in any more environmental impacts than what has already been identified under the Alignment Alternatives and it would operate acceptably during the planning horizon. The estimated cost for constructing a roundabout at 60th Street is $479,126.

Signalized T-Intersection Option

Under the signalized T-intersection option (**Figure 3-34**), the proposed configuration would include the following:

- The northbound approach along SR 7 would include one left turn lane and two right turn lanes.
- The westbound approach along SR 7 would include two left turn lanes and a single through lane.
- The eastbound approach along 60th Street would include one through lane and one right turn lane.

The T-intersection option would not result in any more environmental impacts than what has already been identified under the Alignment Alternatives and it would operate acceptably during the planning horizon. The estimated cost for constructing a T-intersection at 60th Street is $313,296.

Figure 3-34: 60th Street Intersection with Signalized T-Intersection

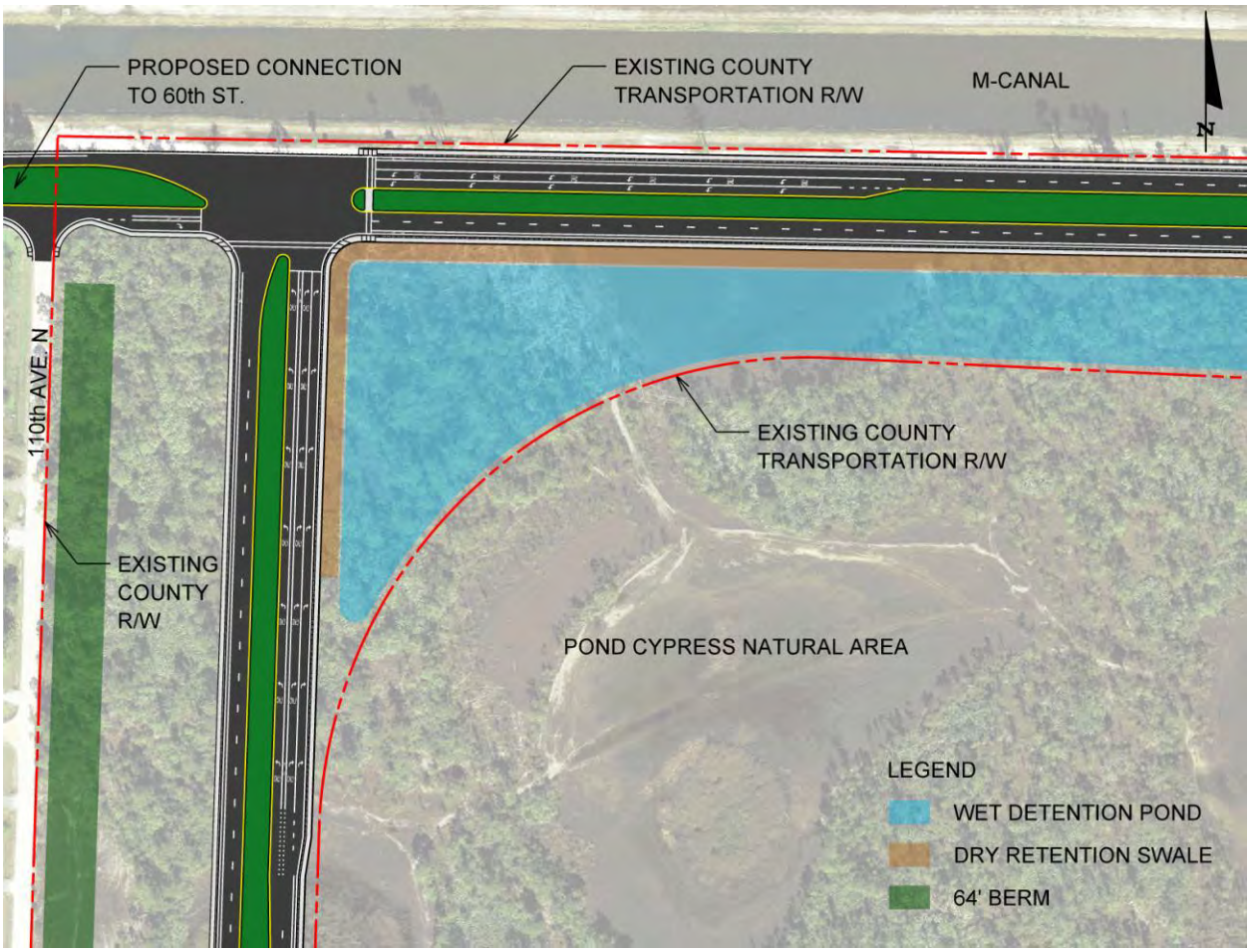

3.2.3.6 INTERSECTION OPTIONS AT THE ENTRANCE TO IBIS

Two options are proposed for the intersection at the entrance to the Ibis Golf and Country Club. These options include a roundabout and a signalized T-intersection. In general, both options could be accommodated within the existing right of way. However, some encroachment would be required for the West Alignment Alternative to properly tie into the existing entrance at Ibis. These options are illustrated in **Figures 3-35** and **3-36**. If the roundabout option is selected and additional improvements are needed in the future, then the roundabout will be reassessed.

The Design Traffic Technical Memorandum, which was prepared for this project, provides the future 2040 Level of Service for each intersection option. This information is summarized in **Table 3-3** below.

Table 3-3: Future 2040 Level of Service at the Entrance to Ibis

Intersection Option	Level of Service (LOS)
Ibis Entrance T-Intersection	C
Ibis Entrance Roundabout	A

Roundabout Option

The roundabout option (**Figure 3-35**) would include two circulating lanes except along the north side of the roundabout where only one lane is proposed. The conceptual design includes the following characteristics:

- Approximately 160 foot wide inscribed circle diameter.
- Six foot wide truck apron.
- Two 15 foot wide approach lanes on all approaches.
- Two 15 foot wide circulating lanes with a single 18 foot wide lane on the north side.
- Two 15 foot wide exit lanes on the northbound and southbound movements and one 18 foot wide exit lane on the westbound movement.

The roundabout option would not result in any more environmental impacts than what has already been identified under the Alignment Alternatives and it would operate acceptably during the planning horizon. The estimated cost for constructing a roundabout at the entrance to Ibis is $479,126.

Figure 3-35: Ibis Golf and Country Club Entrance with Roundabout

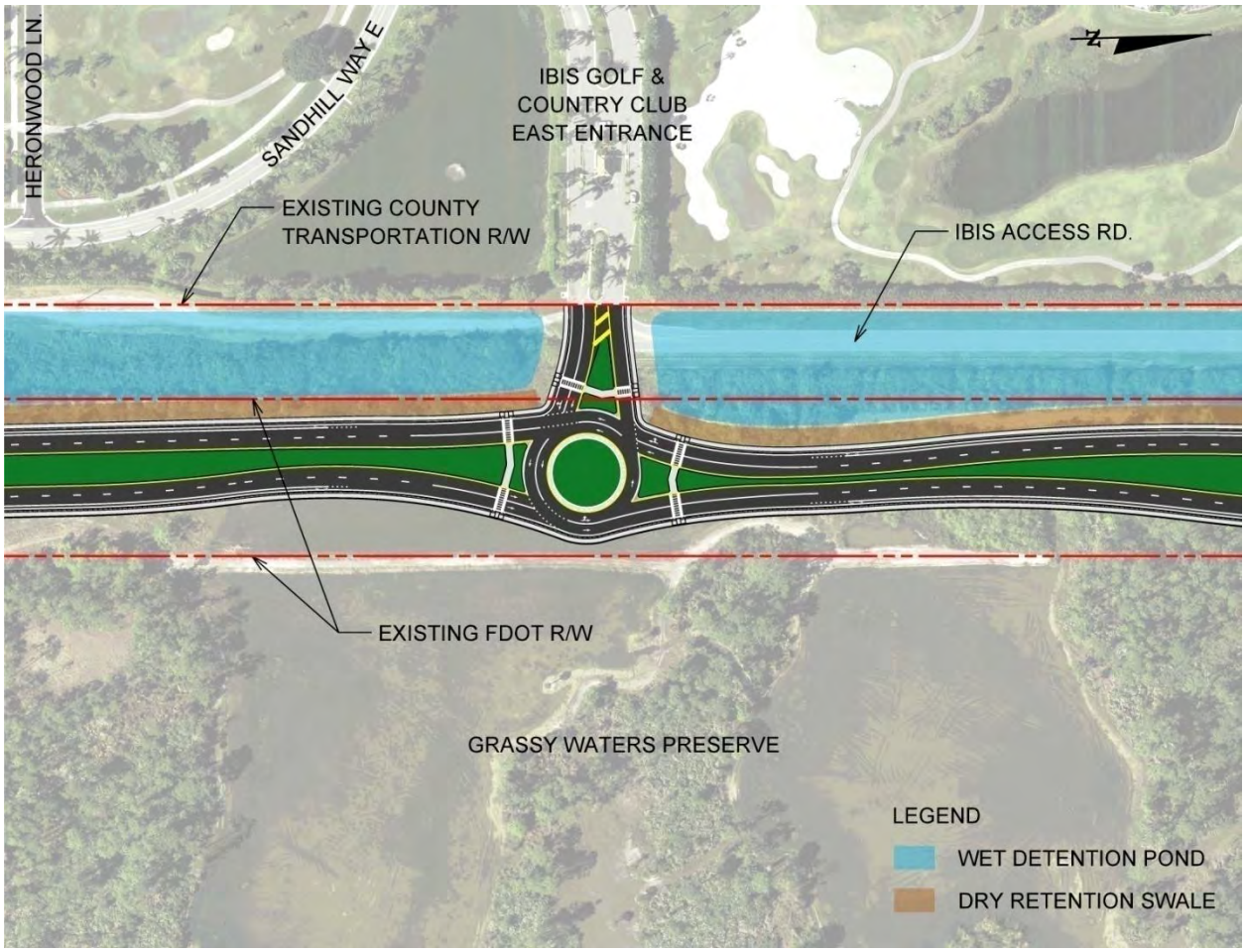

Signalized T-Intersection Option

Under the signalized T-intersection option (**Figure 3-36**) the proposed configuration would include the following:

- The northbound approach along SR 7 would include one left turn lane and two through lanes.
- The southbound approach along SR 7 would include two through lanes and one right turn lane.
- The eastbound approach from the Ibis entrance would include one left turn lane and one right turn lane.

The T-intersection option would not result in any more environmental impacts than what has already been identified under the Alignment Alternatives and it would operate acceptably during the planning horizon. The estimated cost for constructing a T-intersection at the entrance to Ibis is $239,718.

Figure 3-36: Ibis Golf and Country Club Entrance with Signalized T-Intersection

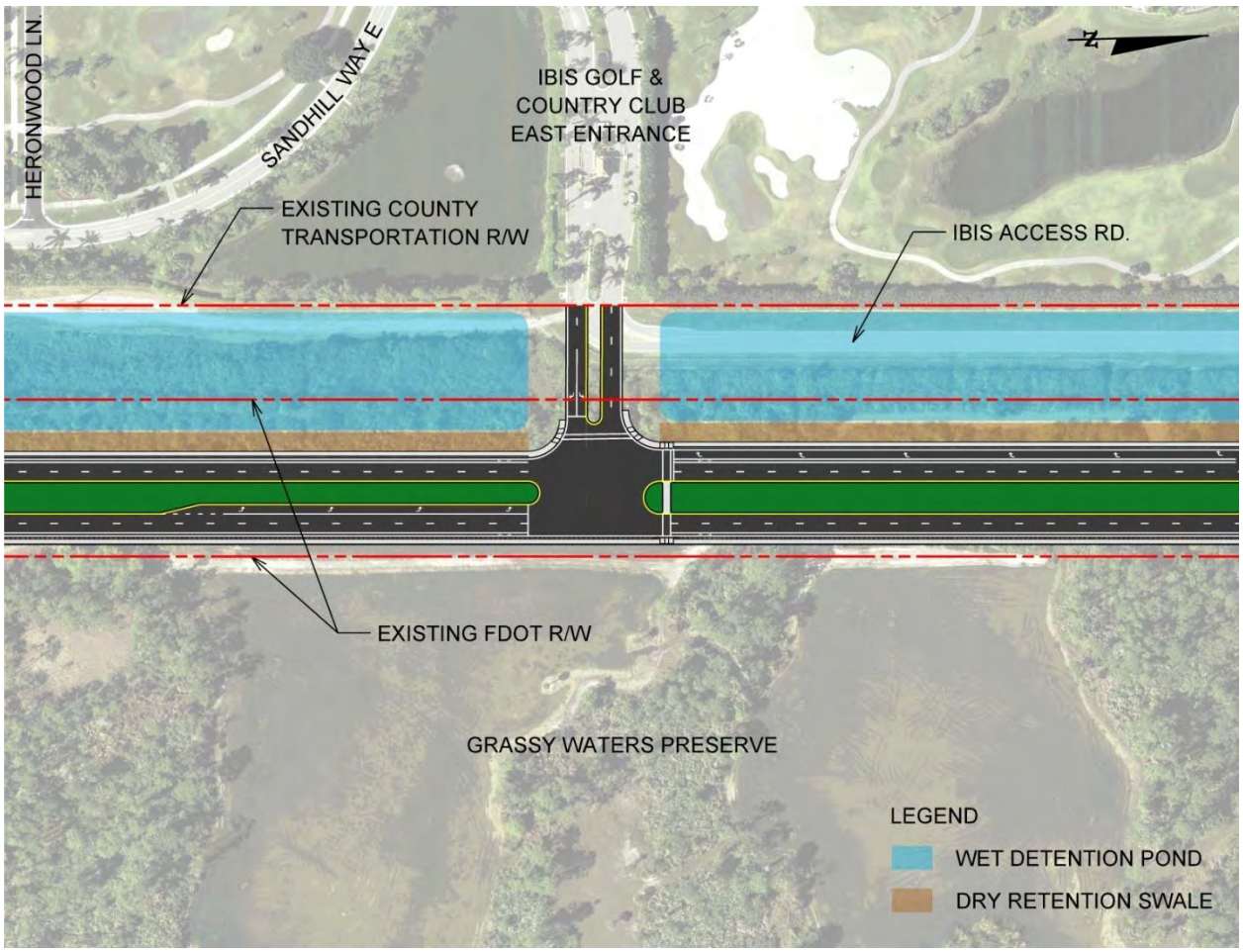

3.2.3.7 M-CANAL CROSSING OPTIONS

Two options for crossing over the M-Canal were presented at the Public Hearing. The first option includes a skewed bridge crossing over the M-Canal. The second option includes a straight bridge crossing over the M-Canal. These options are illustrated in **Figures 3-37** and **3-38**. After the Public Hearing, the straight bridge crossing was modified to minimize the amount of encroachment into the Pond Cypress Natural Area while avoiding any encroachment over the portion of the M-Canal owned by the City of West Palm Beach.

Skewed Bridge Crossing Option

Under this option, a skewed bridge crossing over the M-Canal is proposed as shown in **Figure 3-37**. A portion of the bridge would be located outside of the FDOT right of way and within right of way owned by the City of West Palm Beach. The bridge would be located on a curve with a radius of 819 feet and super-elevated at three percent. The benefit of this option is that it avoids the Pond Cypress Natural Area.

Figure 3-37: M-Canal Skewed Bridge Crossing

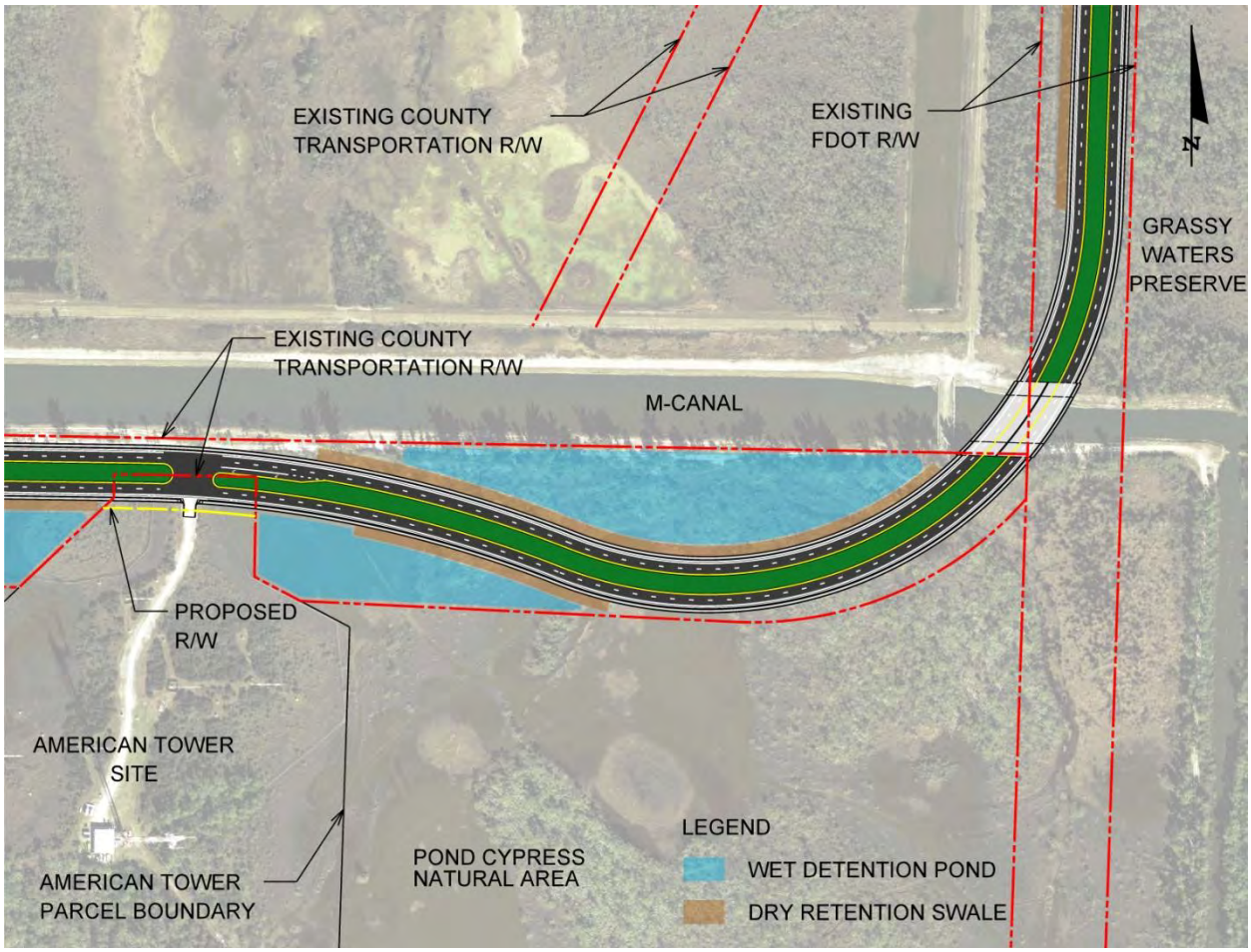

Straight Bridge Crossing Option

Under this option, a bridge perpendicular to the M-Canal is proposed as shown in **Figure 3-38**. The benefit of this option is that the bridge crossing would be located within existing FDOT right of way. This avoids any encroachment over the portion of the M-Canal owned by the City of West Palm Beach. However, to maintain the bridge within FDOT right of way, the alignment must shift south into the Pond Cypress Natural Area. The curve at the approach to the bridge would include a radius of 716 feet with a super-elevation of 4.5 percent. Through coordination with FHWA, it was determined that impacts related to the straight bridge crossing of the M-Canal would constitute a Section 4(f) use of the Pond Cypress Natural Area. Palm Beach County has indicated that a significant land swap would be needed to compensate for the straight bridge crossing option. This section of the Pond Cypress Natural Area also serves as mitigation for the County's two lane extension of SR 7. Additional funds would be needed for mitigation if this option is selected. Information related to the Pond Cypress Natural Area is provided within **Section 4.9.1**.

The amount of encroachment into the Pond Cypress Natural Area is approximately 7.3 acres. Wetland impacts associated with this option would amount to 8.02 acres. This includes 7.29 acres within the area of encroachment and 0.73 acres within existing right of way. Additional information concerning wetlands is provided within **Section 4.13**.

After the Public Hearing, the Straight Bridge Crossing Option over the M-Canal was modified to reduce the amount of encroachment into the Pond Cypress Natural Area (**Figure 3-39**). The design speed for the curve across the bridge was reduced from 45 MPH to 40 MPH. This results in 1.23 acres of encroachment as opposed to 7.3 acres for the straight bridge crossing. This option also avoids the portion of the M-Canal owned by the City of West Palm Beach. The section of the M-Canal owned by the City of West Palm Beach is protected under a Special Act by the Florida Legislature (Chapter 67-2169). The design speed for the segments north and south of the M-Canal crossing would remain at 45 MPH.

Figure 3-38: M-Canal Straight Bridge Crossing

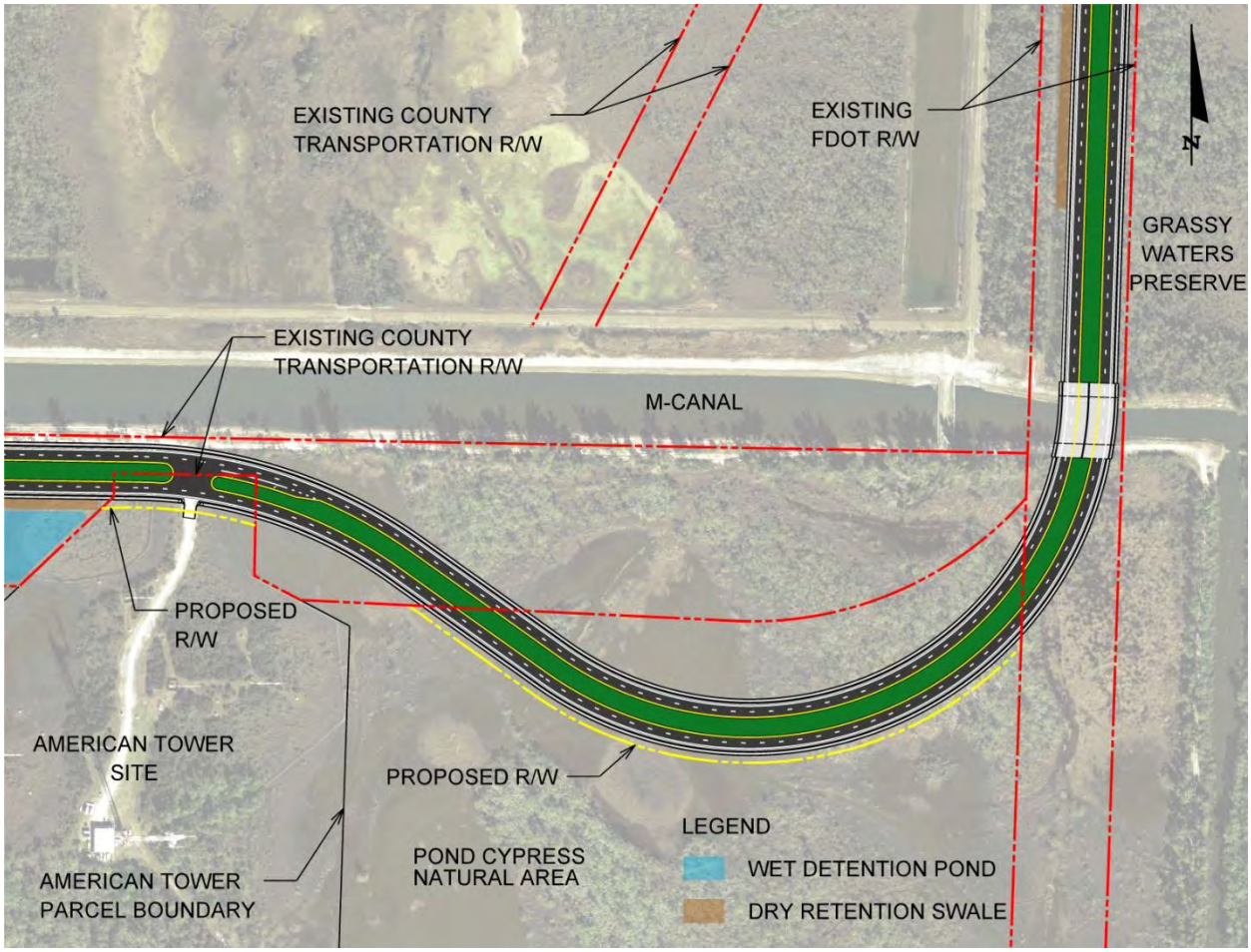

Figure 3-39: M-Canal Straight Bridge Crossing - Modified

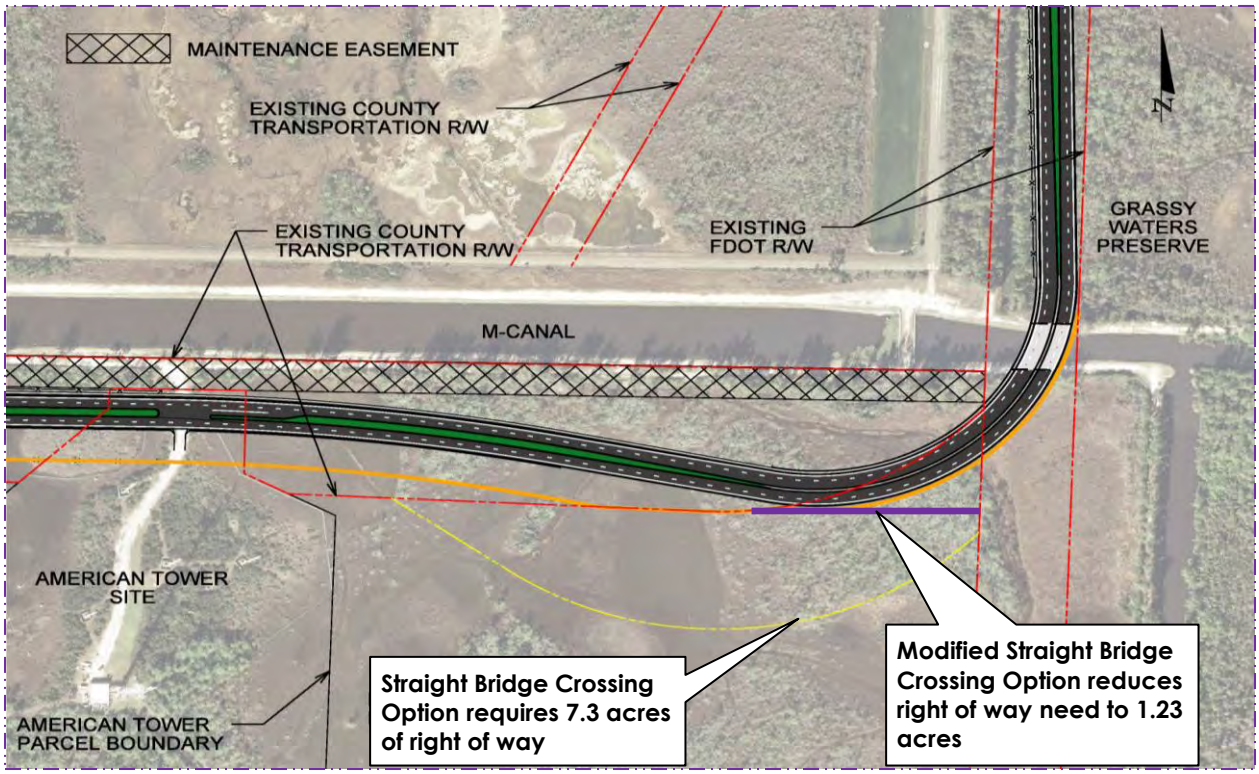

3.2.3.8 EVALUATION MATRIX

Evaluation matrices were developed to help summarize and compare the impacts associated with each alternative. The evaluation matrix for the Build Alternatives within Segments 1 and 2 is provided within **Table 3-4**. A summary matrix for the intersection options are provided within **Tables 3-5** to **3-7**. **Table 3-8** provides a summary matrix for the M-Canal crossing options.

Table 3-4: Summary Matrix for the Alignment Alternatives

EVALUATION FACTORS	ALTERNATIVES				
		Build[1]			
	No-Build	West Alignment	West Alignment - Modified	Center Alignment	East Alignment
BUSINESS IMPACTS					
Number of businesses expected to be relocated	0	0	0	0	0
Number of business parcels impacted	0	1	1	1	1
RESIDENTIAL IMPACTS					
Number of residences expected to be relocated	0	0	0	0	0
Number of residential parcels impacted	0	0	0	0	0
RIGHT OF WAY IMPACTS					
Total number of parcels impacted (including unimproved)	0	1	1	1	1
Area of roadway right of way to be acquired (acres)	0	1.35	1.35	1.35	1.35
COMMUNITY IMPACTS					
Number of public services impacted	0	0	0	0	0
Number of residences that approach/exceed NAC (≥ 66 dBA)	0	17	41	17	17
Number of residences with substantial increase (15 dBA)	0	0	0	0	0
IMPACTS ON CULTURAL/HISTORIC RESOURCES AND PUBLIC PARKS					
Number of historic/archeological sites adjacent to right of way	0	0	0	0	0
Number of public recreational sites adjacent to right of way	0	4	4	4	4
NATURAL ENVIRONMENTAL IMPACTS					
Total wetland impact area (acres)	0	114.5	52.9	114.5	114.5
Impact to preferred snail kite habitat (acres)	0	10.0	0.7	10.0	10.0
Buffer area provided between roadway and Grassy Waters Preserve	n/a	High	High	Med	None
FLOODPLAIN AND FLOODWAY ENCROACHMENT					
Area of base floodplain encroachment (acres)	0	0	0	0	0
Area of base floodway encroachment (acres)	0	0	0	0	0
POTENTIAL CONTAMINATED SITES					
Number of potential contaminated sites impacted	0	0	0	0	0
ESTIMATED PROJECT COSTS (Present value, subject to change)					
Construction cost (millions)	0	64.0	54.6	64.0	64.0
Right of way acquisition cost (millions)	0	1.0	1.0	1.0	1.0
Engineering cost (millions) (12%)	0	7.7	6.6	7.7	7.7
Construction engineering and inspection (millions) (12%)	0	7.7	6.6	7.7	7.7
TOTAL COST (millions)	0	80.4	68.8	80.4	80.4

1. The West, Center, and East Alignments also include the Segment 1 Build Alternative. Intersection options within Segment 2 are evaluated as part of a separate Evaluation Matrix in this chapter.

Table 3-5: Summary Matrix for the Intersection Options at Okeechobee Boulevard

EVALUATION FACTORS	OKEECHOBEE BOULEVARD INTERSECTION OPTIONS	
	At-Grade	Grade Separated
BUSINESS IMPACTS		
Number of businesses expected to be relocated	0	0
Number of business parcels impacted	0	7
RESIDENTIAL IMPACTS		
Number of residences expected to be relocated	0	0
Number of residential parcels impacted	0	0
RIGHT OF WAY IMPACTS		
Total number of parcels impacted (including unimproved)	0	14
Area of roadway right of way to be acquired (acres)	0	2
COMMUNITY IMPACTS		
Number of public services impacted	0	0
Number of residences that approach/exceed NAC (≥ 66 dBA)	0	0
Number of residences with substantial increase (15 dBA)	0	0
IMPACTS ON CULTURAL/HISTORIC RESOURCES AND PUBLIC PARKS		
Number of historic/archeological sites adjacent to right of way	0	0
Number of public recreational sites adjacent to right of way	0	0
NATURAL ENVIRONMENTAL IMPACTS		
Total wetland impact area (acres)	0	0
FLOODPLAIN AND FLOODWAY ENCROACHMENT		
Area of base floodplain encroachment (acres)	0	0
Area of base floodway encroachment (acres)	0	0
POTENTIAL CONTAMINATED SITES		
Number of potential contaminated sites impacted	0	0
ESTIMATED PROJECT COSTS (Present value, subject to change)		
Construction cost (millions)	0	23.5
Right of way acquisition cost (millions)	0	1.6
Engineering cost (millions) (12%)	0	2.8
Construction engineering and inspection (millions) (12%)	0	2.8
TOTAL COST (millions)	0	30.7

Table 3-6: Summary Matrix for the Intersection Options at 60th Street

EVALUATION FACTORS	60th STREET INTERSECTION OPTIONS	
	T-Intersection	Roundabout
BUSINESS IMPACTS		
Number of businesses expected to be relocated	0	0
Number of business parcels impacted	0	0
RESIDENTIAL IMPACTS		
Number of residences expected to be relocated	0	0
Number of residential parcels impacted	0	0
RIGHT OF WAY IMPACTS		
Total number of parcels impacted (including unimproved)	0	0
Area of roadway right of way to be acquired (acres)	0	0
COMMUNITY IMPACTS		
Number of public services impacted	0	0
Number of residences that approach/exceed NAC (≥ 66 dBA)	0	0
Number of residences with substantial increase (15 dBA)	0	0
IMPACTS ON CULTURAL/HISTORIC RESOURCES AND PUBLIC PARKS		
Number of historic/archeological sites adjacent to right of way	0	0
Number of public recreational sites adjacent to right of way	1	1
NATURAL ENVIRONMENTAL IMPACTS		
Total wetland impact area (acres)	0	0
FLOODPLAIN AND FLOODWAY ENCROACHMENT		
Area of base floodplain encroachment (acres)	0	0
Area of base floodway encroachment (acres)	0	0
POTENTIAL CONTAMINATED SITES		
Number of potential contaminated sites impacted	0	0
ESTIMATED PROJECT COSTS (Present value in million $, subject to change)		
Construction cost (millions)	0.313	0.479
Right of way acquisition cost (millions)	0	0
Engineering cost (millions) (12%)	0.038	0.057
Construction engineering and inspection (millions) (12%)	0.038	0.057
TOTAL COST (millions)	0.389	0.593

Table 3-7: Summary Matrix for the Intersection Options at the Ibis Entrance

EVALUATION FACTORS	IBIS INTERSECTION OPTIONS	
	T-Intersection	Roundabout
BUSINESS IMPACTS		
Number of businesses expected to be relocated	0	0
Number of business parcels impacted	0	0
RESIDENTIAL IMPACTS		
Number of residences expected to be relocated	0	0
Number of residential parcels impacted	0	0
RIGHT OF WAY IMPACTS		
Total number of parcels impacted (including unimproved)	0	0
Area of roadway right of way to be acquired (acres)	0	0
COMMUNITY IMPACTS		
Number of public services impacted	0	0
Number of residences that approach/exceed NAC (≥ 66 dBA)	0	0
Number of residences with substantial increase (15 dBA)	0	0
IMPACTS ON CULTURAL/HISTORIC RESOURCES AND PUBLIC PARKS		
Number of historic/archeological sites adjacent to right of way	0	0
Number of public recreational sites adjacent to right of way	1	1
NATURAL ENVIRONMENTAL IMPACTS		
Total wetland impact area (acres)	0	0
FLOODPLAIN AND FLOODWAY ENCROACHMENT		
Area of base floodplain encroachment (acres)	0	0
Area of base floodway encroachment (acres)	0	0
POTENTIAL CONTAMINATED SITES		
Number of potential contaminated sites impacted	0	0
ESTIMATED PROJECT COSTS (Present value, subject to change)		
Construction cost (millions)	0.240	0.479
Right of way acquisition cost (millions)	0	0
Engineering cost (millions) (12%)	0.029	0.057
Construction engineering and inspection (millions) (12%)	0.029	0.057
TOTAL COST (millions)	0.298	0.593

Table 3-8: Summary Matrix for the M-Canal Crossing Options

EVALUATION FACTORS	M-CANAL CROSSING OPTIONS		
	Skewed Bridge Option	Straight Bridge Option	Straight Bridge Option - Modified
BUSINESS IMPACTS			
Number of businesses expected to be relocated	0	0	0
Number of business parcels impacted	0	0	0
RESIDENTIAL IMPACTS			
Number of residences expected to be relocated	0	0	0
Number of residential parcels impacted	0	0	0
RIGHT OF WAY IMPACTS			
Total number of parcels impacted (including unimproved)	1	1	1
Area of roadway right of way to be acquired (acres)	0.5	7.3	1.23
COMMUNITY IMPACTS			
Number of public services impacted	0	0	0
Number of residences that approach/exceed NAC ($\geq$ 66 dBA)	0	0	0
Number of residences with substantial increase (15 dBA)	0	0	0
IMPACTS ON CULTURAL/HISTORIC RESOURCES AND PUBLIC PARKS			
Number of historic/archeological sites adjacent to right of way	0	0	0
Number of public recreational sites adjacent to right of way	1	1	1
Number of public recreational sites impacted	0	1	1
NATURAL ENVIRONMENTAL IMPACTS			
Total wetland impact area (acres)	0	8.0	0.6
Impact to Pond Cypress Natural Area	No	Yes	Yes
FLOODPLAIN AND FLOODWAY ENCROACHMENT			
Area of base floodplain encroachment (acres)	0	0	0
Area of base floodway encroachment (acres)	0	0	0
POTENTIAL CONTAMINATED SITES			
Number of potential contaminated sites impacted	0	0	0
ESTIMATED PROJECT COSTS (Present value, subject to change)			
Construction cost (millions)	2.43	2.43	2.43
Right of way acquisition cost (millions)	0	0	0
Engineering cost (millions) (12%)	0.292	0.292	0.292
Construction engineering and inspection (millions) (12%)	0.292	0.292	0.292
TOTAL COST	3.014	3.014	3.014

CHAPTER 4: IMPACTS

4.1 LAND USE

4.1.1 EXISTING LAND USE

The methodology used to determine the composition of existing land uses along the project corridor includes only the portions of the parcels that lie within the half mile buffer of the corridor. **Table 4-1** represents the generalized existing land uses based on Palm Beach County Property Appraiser data. **Figure 4-1** illustrates the existing land uses within a half mile of the project corridor.

A majority of the existing land uses along the project corridor include publicly owned lands dedicated to the Pond Cypress Natural Area and Grassy Waters Preserve. These land categories are typically identified as municipal or recreation/open space. The second most dominant land use is single family residential. Starting from the south end of the project, at the intersection of Okeechobee Boulevard and SR 7, there is a mix of uses including low and medium density residential, commercial, institutional, industrial, recreation and open spaces, and vacant. The southeast corner is primarily vacant, with some single family residential and open spaces behind the vacancy. The northeast corner of the intersection is primarily single and multi-family communities with commercial properties (Walgreens and Sun Trust Bank) bordering Okeechobee Boulevard. The southwest corner of the intersection is the most diverse set of land uses, including multi-family residential, commercial, institutional, industrial, recreation and open space, and vacant properties. The northwest corner of the intersection is fronted by a large commercial property (Target Shopping Center) with the remainder of the area surrounded by a planned single family residential community (Porto Sol).

Beyond the intersection at Okeechobee Boulevard and up to 60th Street, the land uses to the east of the road are entirely recreation and open spaces, consisting of the Pond Cypress Natural Area and the Grassy Waters Preserve, and the properties to the west are primarily single family residential (Porto Sol, La Mancha, and the Acreage). As the proposed corridor continues east between 60th Street and the crossing over the M-Canal, recreation and open spaces (Pond Cypress Natural Area) and a small parcel used as an AM tower site remain to the south and single family residential (the Ibis Golf and Country Club) remains to the north. As the proposed corridor takes its final turn to the north, the land use to the east is entirely recreation and open space (Grassy Waters Preserve) and the land use to the west is primarily single and multi-family residential (Ibis Golf and Country Club) with the exception of the Ibis Preserve located between the M-Canal and Ibis. The northern intersection of Northlake Boulevard and SR 7 is surrounded by recreation and open space, single and multi-family residential, commercial, and institutional land uses. The land use at the northwest, northeast and southeast corners of this intersection is entirely recreation and open space (Grassy Waters Preserve and the Loxahatchee Slough Natural Area). The land use at the southwest corner of the intersection includes commercial (the Shoppes at Ibis), multi-family residential (Amli at

Ibis), institutional (West Palm Beach water treatment facility), and single family residential (Ibis Golf and Country Club).

Table 4-1: Existing Land Use within Half Mile of the Project Corridor

Existing Generalized Land Use	Acres	Percentage
Single Family Residential	1,204.2	22.1%
Multi Family Residential	99.7	1.8%
Mixed Use	1.2	0.0%
Commercial	68.5	1.3%
Industrial	3.8	0.1%
Municipal / Institutional	1,952.2	35.8%
Recreation / Open Space	1,340.6	24.6%
Agricultural	10.3	0.2%
Transportation	203.9	3.7%
Vacant	231.3	4.2%
Water	342.0	6.3%
Total	5,457.5	100.0%

The Palm Beach County Property Appraiser categorizes their land uses in greater detail than typical standard land uses. These detailed land uses were consolidated to the general land uses, based on information from the Property Appraiser.

Figure 4-1: Existing Land Use

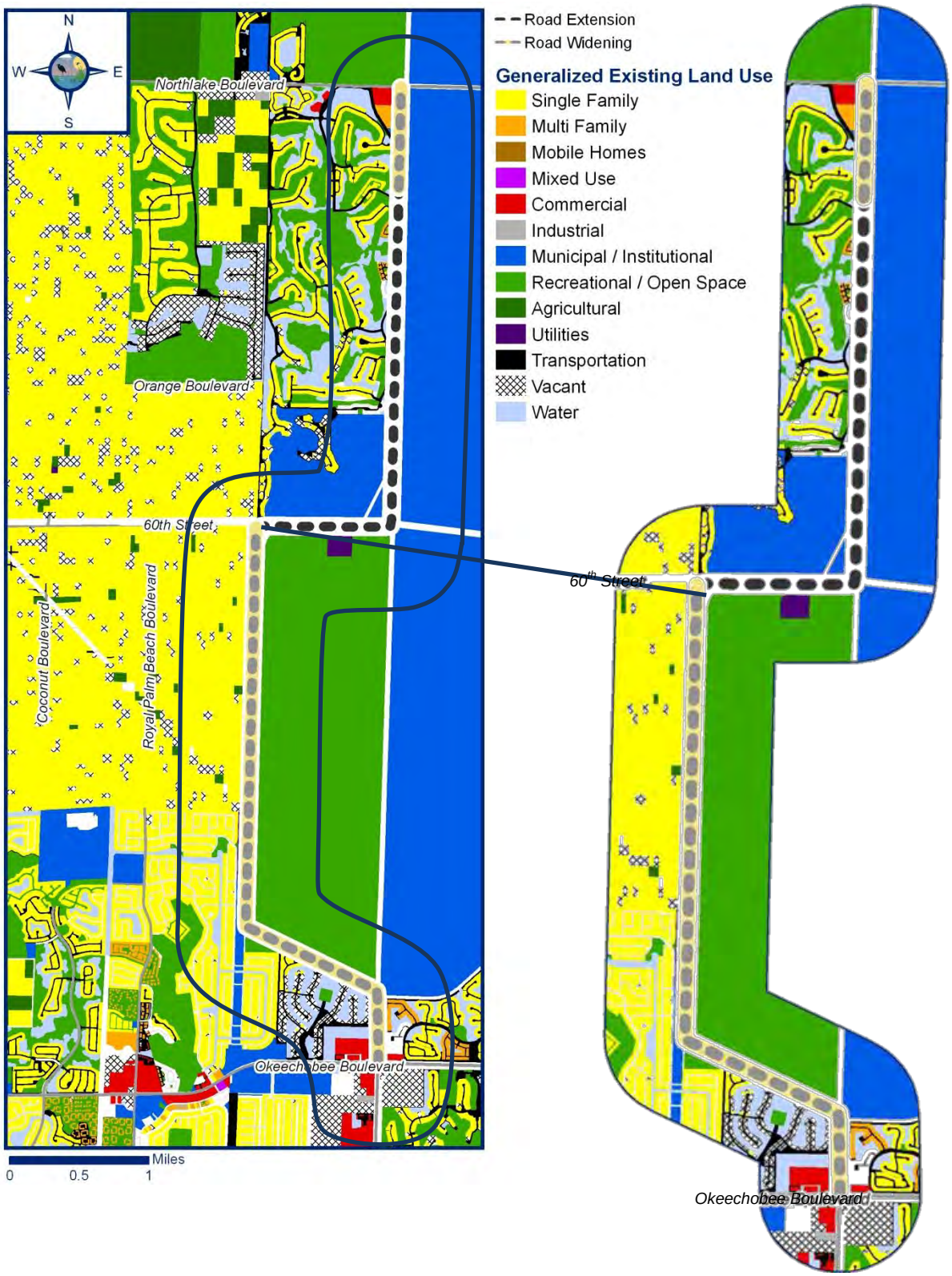

4.1.2 FUTURE LAND USE

Future land use designations within a half mile buffer of the project corridor include residential, mixed-use, commercial, industrial, institutional, recreation, conservation, and water. According to the Palm Beach County 2010 Future Land Use designations, few changes are anticipated within the half mile buffer of the corridor from the current existing uses. **Table 4-2** represents the generalized future land uses based on Palm Beach County, City of West Palm Beach, and Village of Royal Palm Beach Future Land Use designations. **Figure 4-2** illustrates the future land uses within half mile of the project corridor, as well as the entirety of the study area. No developments of regional impact are planned within a half mile buffer of the project.

4.1.3 LAND USE IMPACTS

All local governments in Florida are required to have a state-approved, locally-adopted comprehensive plan that is consistent with adopted regional and state plans. A comprehensive plan includes nine required elements, one of which is Future Land Use. The Future Land Use Element sets forth the general distribution, location, and extent of uses allowed within the local government's jurisdiction. Specifically, the Future Land Use Element must include the permitted uses, residential densities, and non-residential densities for each category of land use. The element must include a map that depicts the location of the different future land use categories within the jurisdiction.

In addition to the requirement that development be consistent with the adopted future land use designation, Palm Beach County has adopted a tiered growth management system that identifies specific growth objectives and development regulations for different areas of the County. The portions of the study area within the City of West Palm Beach and the Village of Royal Palm Beach are included within the Urban Services Boundary and are designated as the Urban/Suburban Tier. This tier is expected to accommodate 90 percent of the existing and projected growth in the County. These areas are further regulated by the municipal comprehensive plans. Both the City of West Palm Beach and the Village of Royal Palm Beach have objectives and policies in their plan that limit the development of non-residential uses within the study area. Both municipalities discourage strip commercial development by requiring commercial nodes and protecting existing residential areas from incompatible uses. Additional regulations are applied to lands adjacent to the Grassy Waters Preserve that limit development to that which would not be detrimental to the City's potable water supply. Further, the City encourages infill development east of I-95, and not in its western edge.

The remainder of the study area is located outside of the Urban Service Boundary and in the Exurban Tier. A growth target is not established for this tier and properties cannot be subdivided into parcels containing less than 2.5 acres. For commercial development, a minimum of 25 acres is required and a connection to either one arterial and a collector or two arterials is required for approval. Lands located outside of the Urban Service Boundary are not eligible for connection to centralized water and sewer lines. The intensity of development is thereby limited in order to maintain the rural character.

Typically the construction of a new roadway creates additional access and leads to changes in development patterns. In this instance, due to the regulations noted above, as well as the amount of conservation lands in the study area, the potential for the re-development of lands adjacent to the Build Alternative as more intensive residential uses or as non-residential uses is limited. Therefore, the widening and expansion of SR 7, regardless of the Build Alternative, is not expected to negatively impact existing or future land uses.

Table 4-2: Future Land Use within Half Mile of the Project Corridor

Future Land Use	Acres	Percentage
Residential (Low Density)	134.7	17.3%
Residential (Medium Density)	7.5	1.0%
Residential (High Density)	1.7	0.2%
Residential (Rural)	7.9	1.0%
Planned Community	520.0	66.7%
Mixed Use	2.0	0.3%
Commercial	17.1	2.2%
Industrial	4.1	0.5%
Municipal	8.1	1.0%
Recreation and Open Space	11.2	1.4%
Conservation	43.2	5.6%
Utilities	20.2	2.6%
Water	1.8	0.2%
Total	779.5	100%

Generalized land uses were derived and consolidated from the Future Land Use Maps of Palm Beach County, the City of Royal Palm Beach and the City of West Palm Beach.

Figure 4-2: Future Land Use

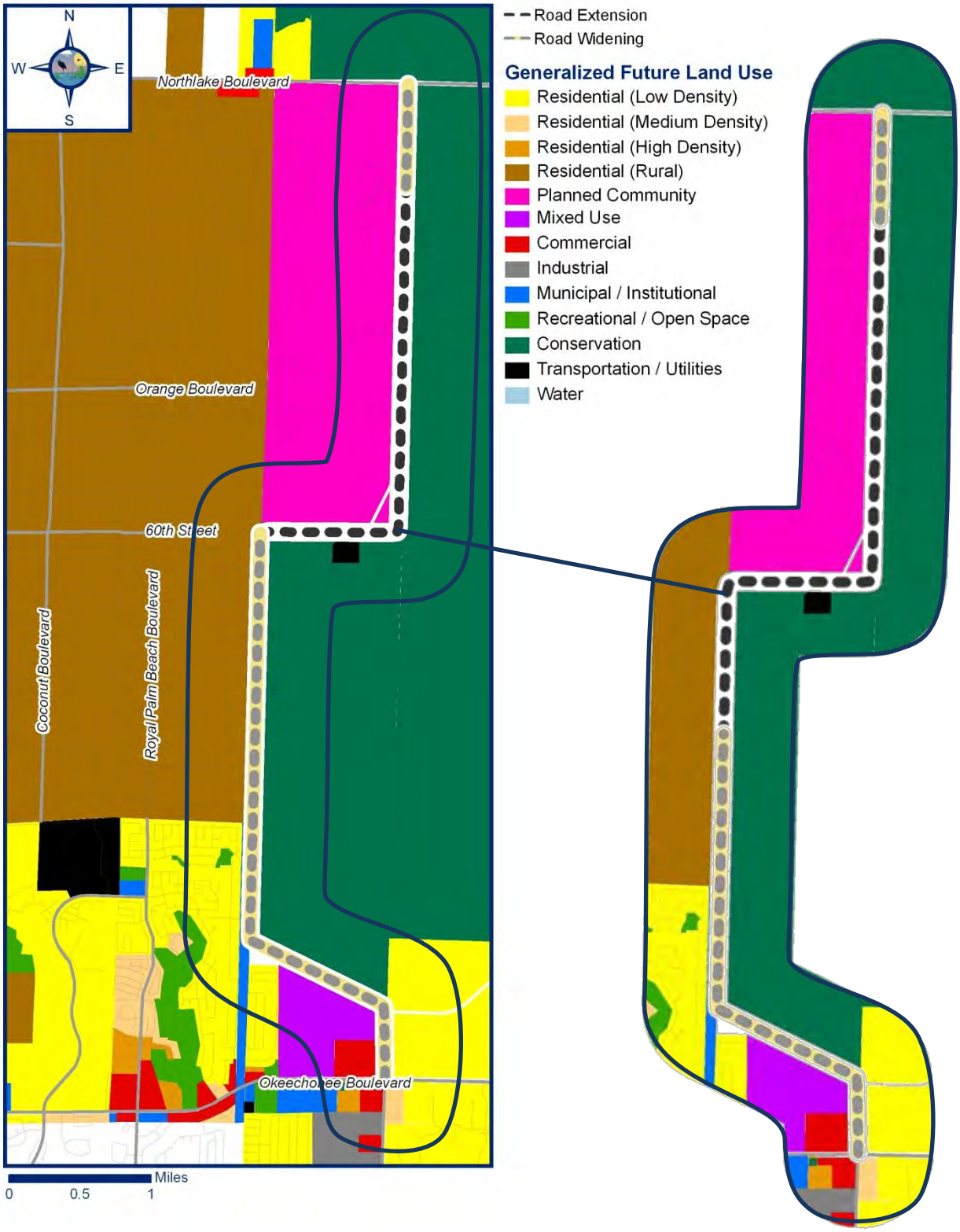

4.2 COMMUNITY COHESION

4.2.1 NEIGHBORHOODS

There are several communities located along the project corridor. Neighborhoods within a half mile buffer of the project corridor include Carleton Oaks, Amli at Ibis, Ibis Golf and Country Club, the Acreage, La Mancha, Porto Sol, Baywinds, Mezzano, Sunset Isles, and Breakers Point. **Figure 4-3** illustrates all neighborhoods within the study area.

None of the proposed Build Alternatives would separate any of the neighborhoods as the project corridor is located between existing conservation areas and these existing communities. Any new construction would include sidewalks and bicycle lanes along the corridor, which would benefit residents in and around the area.

4.2.2 COMMERCIAL CENTERS

Commercial areas (**Figure 4-4**) make up a relatively small portion of the study area at approximately one percent of the land use. Existing commercial centers along the project corridor are concentrated within the intersections of Okeechobee Boulevard and Northlake Boulevard.

In general, the extension of SR 7 would improve the access between the communities and businesses along the corridor. Only the grade separated interchange option at SR 7 and Okeechobee Boulevard would result in potential impacts to existing commercial centers and outparcels (**Figure 4-5**). Specifically, seven business properties would be impacted. This includes the removal of a row of parking from the McDonalds, Wachovia Bank, Walgreens, and Suntrust Bank within the northeast quadrant of the intersection; some right of way impacts to the Target shopping center parcel in the northwest quadrant; some right of way impacts to the Dunkin' Donuts parcel in the southwest quadrant; and the removal of parking and a circulatory driveway from the PNC Bank in the southwest quadrant of the intersection. The addition of a grade separated interchange would also modify the access into the Target Shopping Center from westbound Okeechobee Boulevard, requiring drivers to exit Okeechobee Boulevard before the SR 7 intersection and utilize the frontage road system in order to make a right turn into Fox Trail Road. No impacts would result from the at-grade intersection option at SR 7 and Okeechobee Boulevard.

Figure 4-3: Neighborhoods

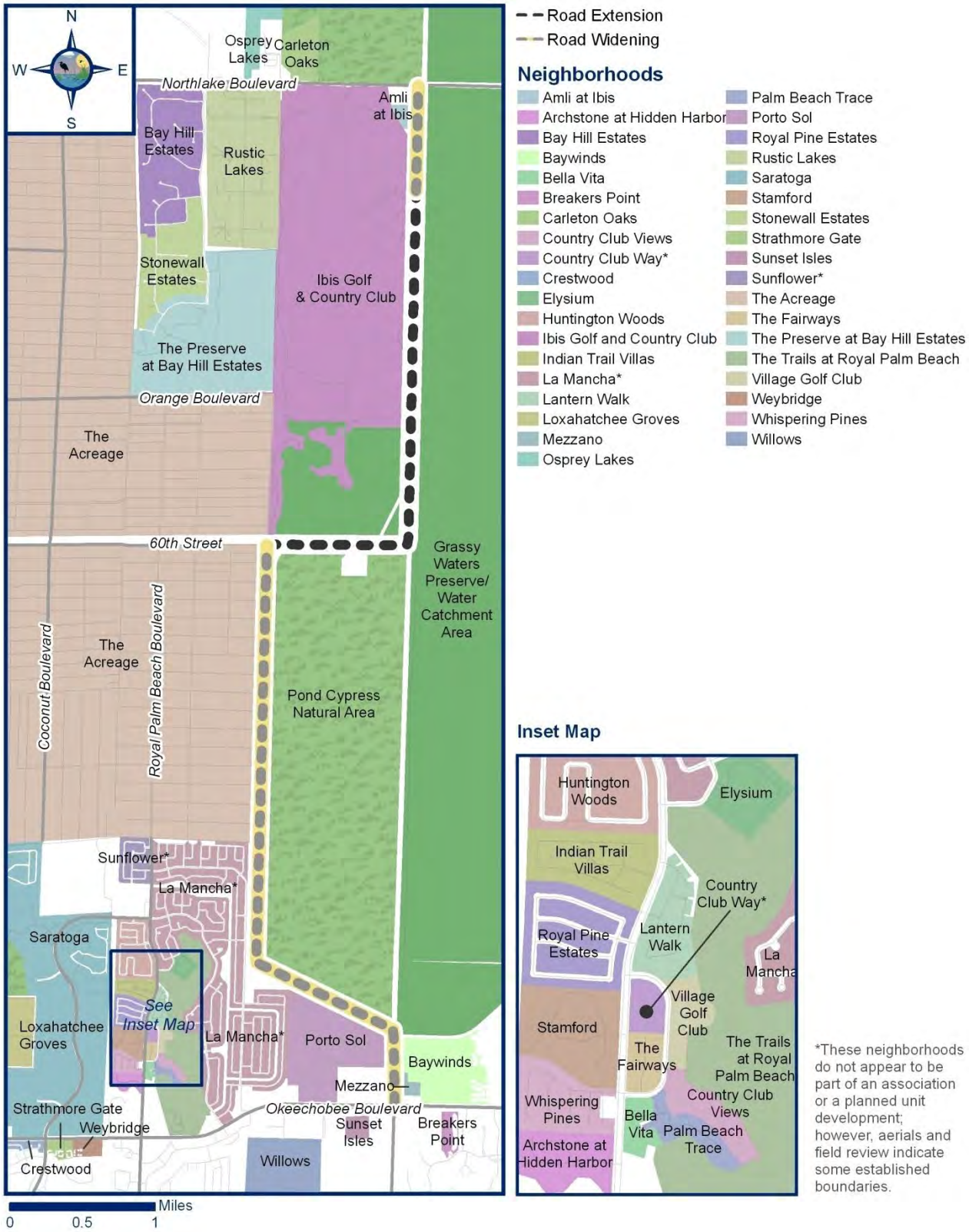

Figure 4-4: Commercial Centers

Figure 4-5: Right of Way Needs for the Intersection at Okeechobee Boulevard

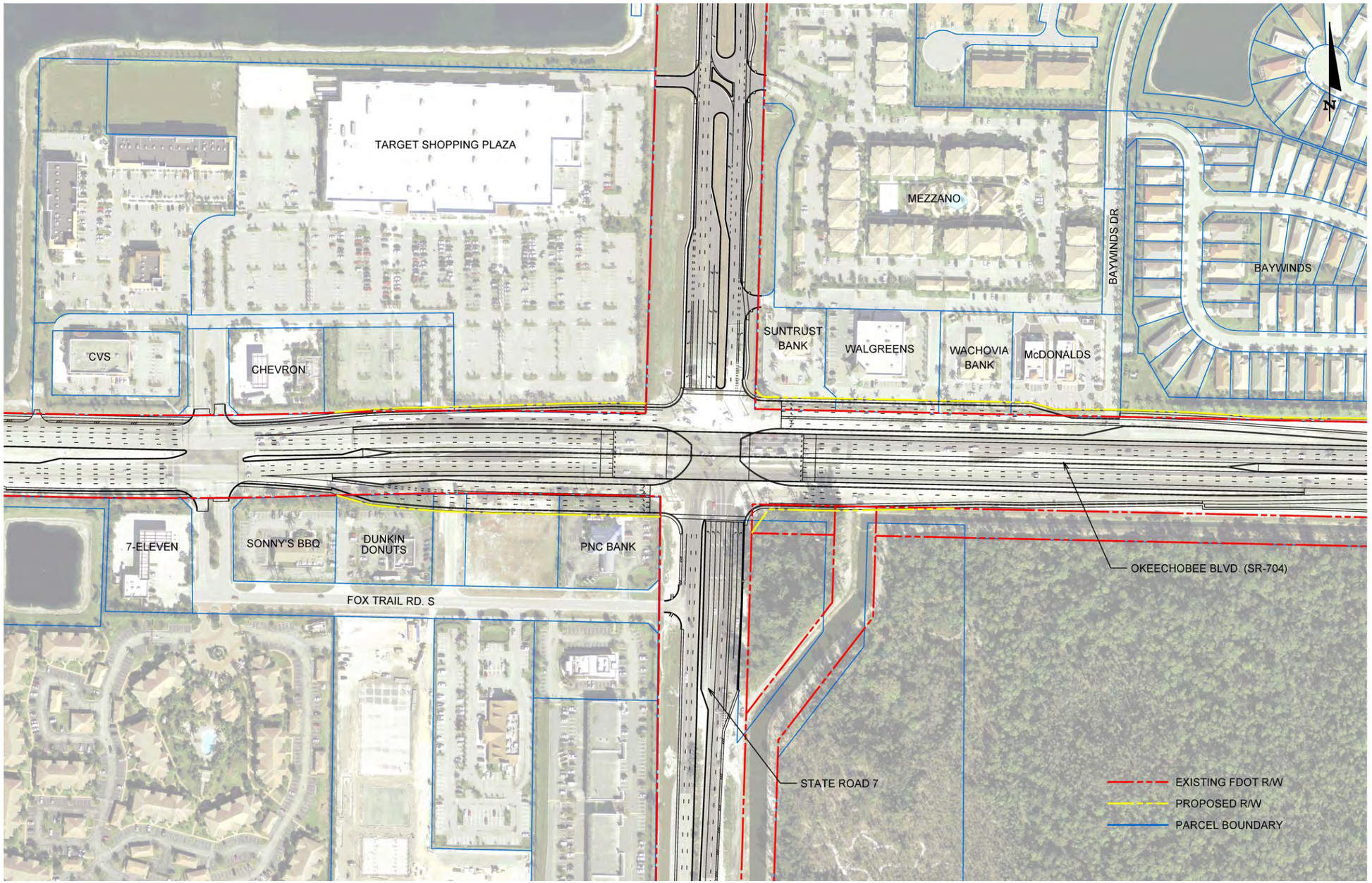

4.3 COMMUNITY FACILITIES AND SERVICES

Community facilities serve the needs of the nearby neighborhoods and communities, as well as surrounding areas. For the purpose of this study, community facilities include churches and other religious institutions, public and private schools, and public buildings and facilities, such as fire and police stations, libraries, and community/civic centers. Willows Park, a county park, and three recreational golf courses can also be found in/or directly adjacent to the study area. The Pond Cypress Natural Area, Grassy Waters Preserve, and Ibis Preserve also lie within the study area. While recreational and open spaces are often considered community facilities, they are further detailed in **Section 4.9**. Community service facilities located within or adjacent to the project study area are discussed in the following sections. All community facilities are shown in **Figure 4-6**. In addition, the Palm Beach County Sheriff's Office also provides its own community services including business partnerships, the Police Athletic League, and summer programs.

4.3.1 CHURCHES AND RELIGIOUS INSTITUTIONS

There are three religious institutions within the study area, none of which are within a half mile of the project corridor. These include: Community of Hope United Methodist Church located at 14101 Okeechobee Boulevard, First Baptist Church of Royal Palm Beach located at 10701 Okeechobee Boulevard, and Star of David Funeral Home located at 9321 Memorial Park Drive. The Star of David Funeral Home is at the far limits of the project study area and just beyond the study area is the adjacent Star of David Cemetery.

4.3.2 SCHOOLS

There are two public schools within the study area: H.L. Johnson Elementary, at 1000 Crestwood Boulevard North and Royal Palm Beach Community High School, at 10600 Okeechobee Boulevard. Royal Palm Beach Community High School is located within the half mile buffer.

H. L. Johnson Elementary has an approximate attendance of 900 students. Drop-off time generally occurs from 7:30 a.m. to 8 a.m. and pick-up time generally occurs from 2 p.m. to 2:30 p.m. The school facilities include one hard clay court for multi-purpose use including athletic activities.

Royal Palm Beach Community High School has an approximate attendance of 2,018 students. Drop-off time generally occurs from 7 a.m. to 7:30 a.m. and pick-up time generally occurs from 3 p.m. to 3:30 p.m. The school facilities include one baseball field, one football field with a surrounding track, one softball field, four basketball courts, two racquetball courts, and eight tennis courts. Royal Palm Beach Community High School also provides adult education classes on weekday evenings. Classes generally start from 5 p.m. to 7 p.m. and typically end from 6:30 p.m. to 9:30 p.m.

Figure 4-6: Community Facilities

Although the Royal Palm Beach Community High School is located within a half mile of the project, no impacts from any of the Build Alternatives are anticipated. The high school is located along the south side of Okeechobee Boulevard.

4.3.3 DAYCARE FACILITIES

There are three daycare facilities within the study area. None of these facilities are within a half mile of the project corridor. The three facilities include Kinder Care Learning Center at 101 Heatherwood Drive, Hands-On Learning at 11367 Okeechobee Boulevard and La Petite Academy at 153 Sparrow Drive.

Approximately eighty children are enrolled at Kinder Care Learning Center. Drop-off time for the center is from 8 a.m. to 11 a.m. and pick-up time is from 4:30 p.m. to 6:30 p.m. Approximately 60 children are enrolled at Hands-On Learning. Drop-off time for Hands-On Learning is from 7 a.m. to 9 a.m. and pick-up time is from 5 p.m. to 6 p.m. La Petite Academy is licensed to enroll a maximum of 117 students. Drop-off time for La Petite Academy is from 8 a.m. to 8:30 a.m. and pick-up time is from 5:30 p.m. to 6 p.m.

4.3.4 MUNICIPAL FACILITIES

There is one water treatment facility owned by the City of West Palm Beach along the project corridor. This facility is located south of Northlake Boulevard, adjacent to the Amli Apartments and the Ibis Golf and Country Club. None of the Build Alternatives would impact this facility.

In addition, Palm Beach County owns the Water Utilities Regional Pumping Facility, at 12500 N 40th Street, Village of Royal Palm Beach, just west of H.L. Johnson Elementary School. This county facility is located outside of the half mile buffer from the project corridor.

4.3.5 EMERGENCY SERVICES

The nearest fire station, Station 28, is located at 1040 Royal Palm Beach Boulevard. This station is located outside of the half mile buffer from the project corridor. However, the entire study area is serviced by stations 7, 8, 26, 28, and 29. Stations 7 and 8 are West Palm Beach stations and Stations 26, 28, and 29 are Royal Palm Beach stations. **Figure 4-7** illustrates the service areas.

The Palm Beach County Sheriff's Office is divided into districts based on regions of the County. District One represents the City of West Palm Beach and District Nine represents the Village of Royal Palm Beach. District One's headquarters are located at 3228 Gun Club Road. In October of 2006, District Nine was created when the Village of Royal Palm Beach contracted with the Palm Beach County Sheriff's Office for law enforcement services. District Nine's headquarters are located at 11498 Okeechobee Boulevard.

The Ibis Golf and Country Club has a dedicated public safety department. The public safety department ensures safety and security for matters ranging from medical response to crime prevention to planning for and responding to a wide-scale emergency.

The widening and expansion of SR 7, regardless of the Build Alternative, would improve the response time for emergency responders as it would make it easier to access the adjacent residential areas.

Figure 4-7: Fire Rescue and Emergency Medical Services

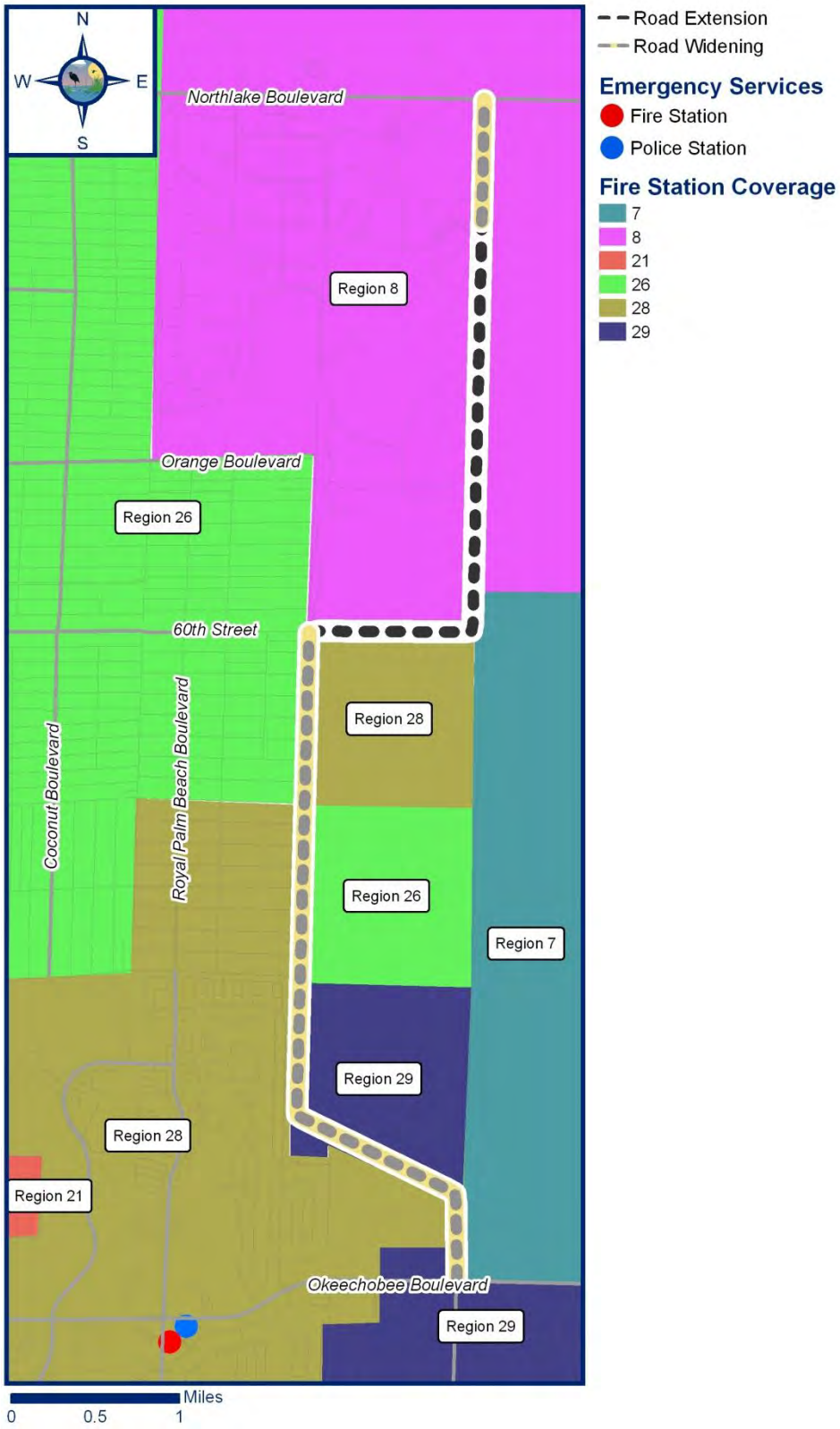

4.3.6 MODAL CHOICES

Bus Routes

Palm Tran is the transit service provider for Palm Beach County. The only service within the study area is on Okeechobee Boulevard, as shown in **Figure 4-8**. While service is limited in the western portions of the county, the extension of SR 7 provides an opportunity for Palm Tran to improve its service. Ultimately, the widening and extension of SR 7 would provide more route choices and access points for Palm Tran, businesses and communities within the study area, while diverting traffic off already congested roads, including Royal Palm Beach Boulevard. At this time, no future bus routes through the project corridor have been identified in the Palm Beach MPO's Long Range Transportation Plan.

Pedestrian and Bicycle Facilities

Pedestrian and bicycle facilities exist throughout most of the study area and along the existing portion of SR 7 (**Figures 4-9** and **4-10**). Sidewalks vary from five feet to six feet. Existing bicycle facilities consist of either four foot designated bike lanes, four foot paved shoulders or three foot paved shoulders. Three foot paved shoulders are recognized as bike facilities by the Palm Beach MPO. All of the proposed Build Alternatives enhance both the bicycle and pedestrian environment because they include six foot wide sidewalks and four foot wide bicycle lanes on both sides of the proposed SR 7 extension where none currently exists. In addition, these facilities would tie into the existing six foot wide sidewalk (on the northbound side of SR 7) and bike lanes that the County has provided along the two lane extension of SR 7. This would provide bicyclists and pedestrians in and around the area with fully connected direct access from Okeechobee Boulevard to Northlake Boulevard. Currently, the closest fully connected bicycle access to these two major roadways is approximately 5.5 miles to the east at Military Trail.

Evacuation Routes and Shelters

There are no designated evacuation routes or evacuation shelters within the study area. The closest designated evacuation routes include Southern Boulevard (running east to west), the Florida's Turnpike, (running south to north), and Beeline Highway (SR 710) (running southeast to northwest). Okeechobee Boulevard (running east to west) is also considered an evacuation route, but only east of the Florida's Turnpike, which is approximately 3.8 miles east of the study area. The extension of SR 7 would expedite the evacuation process by improving the linkage between Northlake Boulevard and Southern Boulevard.

Figure 4-8: Existing Transit Routes

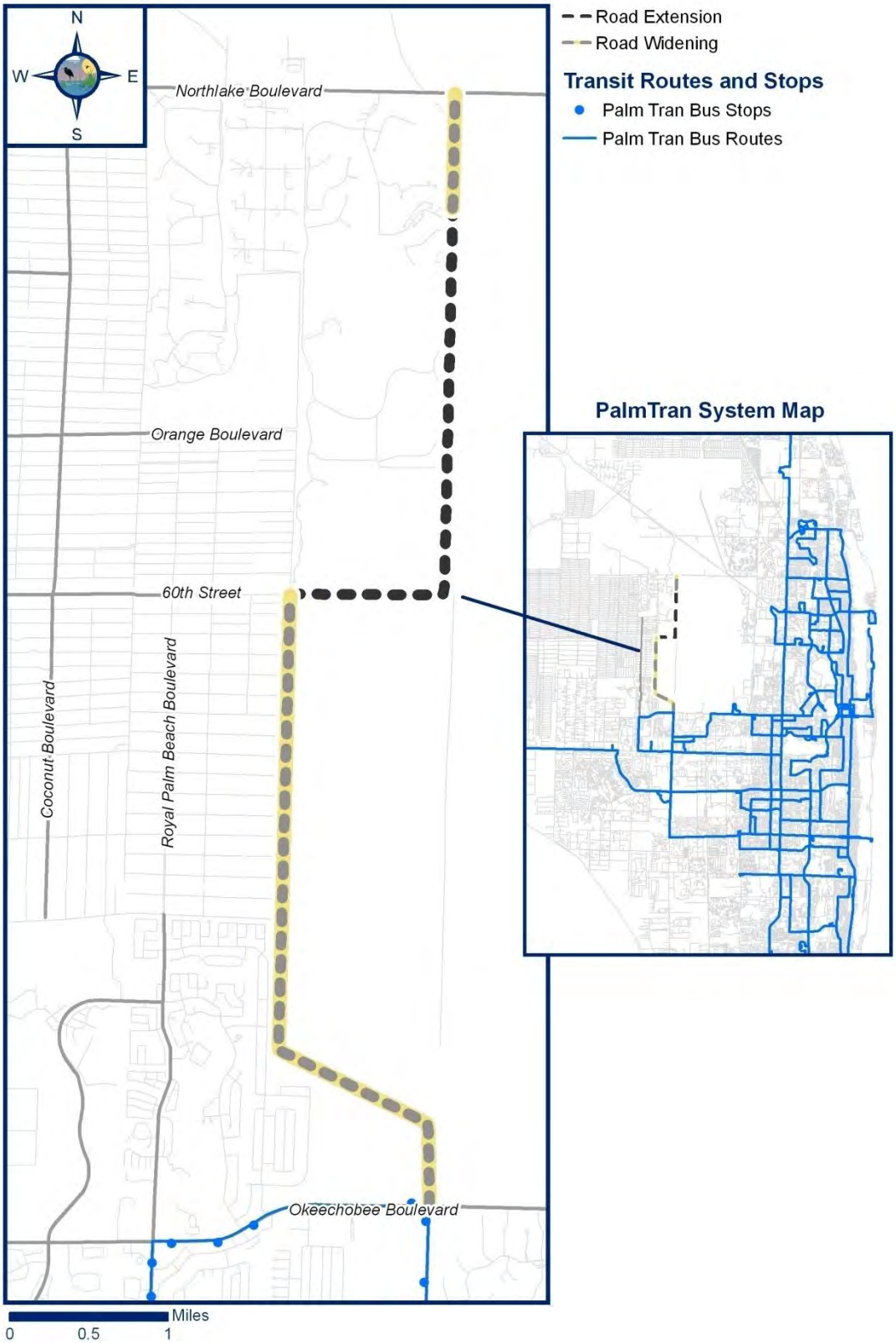

Figure 4-9: Existing Pedestrian Facilities

Existing sidewalk data based on field review in 2004 (though the data may not be all-inclusive) and 2010 (for arterial roads).

Missing sidewalk data based on FDOT Roadway Characteristic Inventory (2001-2010) and categorized as high, medium and low priority. Sidewalks may be missing or in need of repair.

Figure 4-10: Existing Bicycle Facilities

4.4 ECONOMIC IMPACTS

There are limited employment centers located along the project corridor. These are concentrated adjacent to or near the intersections at Okeechobee Boulevard and Northlake Boulevard and consist of shopping centers and retail/service businesses within outparcels. Only the grade separated interchange option at SR 7 and Okeechobee Boulevard would result in potential property impacts to these existing commercial centers (a discussion is provided within **Section 4.2.2**). Impacts to these commercial centers could result in a loss of revenue from property and/or business taxes. No impacts would result from the at-grade intersection option at SR 7 and Okeechobee Boulevard. The widening and extension of SR 7 would not open up new opportunity for economic development due to the location of the project between existing conservation areas and residential communities.

4.5 ENVIRONMENTAL JUSTICE

Environmental justice is "the fair treatment and meaningful involvement of all people regardless of race, color, national origin, or income with respect to the development, implementation, and enforcement of environmental laws, regulation, and policies". In an effort to mitigate any potential environmental justice issues that could arise from the proposed SR 7 project, this project has been developed in accordance with the Civil Rights Act of 1964, as amended by the Civil Rights Act of 1968. As part of that, an analysis of the equitable distribution of the burdens and benefits this project may have on the community has been performed.

The 2010 US Census data was used to identify areas with high-minority (non-White and/ or Hispanic/Latino) and low-income (below poverty level) communities in an effort to observe whether those communities may be disproportionately affected over other areas within the study area. A Sociocultural Data Report analysis through the ETDM Environmental Screening Tool was utilized to capture the 2010 US Census data within the study area. A copy of the report output is provided within **Appendix M**. As the report indicates (and summarized in **Table 4-3**), the half mile study area has both a lower percentage of minorities and population below the poverty line than the county average. Therefore, the project is not found to have a negative or disproportionate effect on any minority or low income population.

Table 4-3: Environmental Justice Analysis

	Total Population	Minority Population (non-White) (%)	Minority Population (Hispanic/ Latino) (%)	Population Below the Poverty Line (%)
SR 7 - Half Mile Buffer	7,582	20.7	14.8	5.8
Palm Beach County	1,299,356	25.3	18.0	10.9

4.6 LAND ACQUISITION, RELOCATION AND DISPLACEMENT IMPACTS

None of the alternatives would displace any residences. However, several business parcels could be affected. The selection of a grade separated interchange at SR 7 and Okeechobee Boulevard would result in the need for approximately two acres of right of way distributed across 14 parcels (as illustrated in **Figure 4-5**). The need for this additional right of way would also impact seven businesses (a discussion is provided within **Section 4.2.2**). No impacts would result from the at-grade intersection option at SR 7 and Okeechobee Boulevard.

Along the M-Canal, there is an AM tower site owned and maintained by American Tower Corporation. The proposed alignments within this area would impact this parcel by up to 1.35 acres as illustrated in **Figure 3-17**. There are five AM towers within the property. Radiating from each tower are underground wires that are critical for the operation of the AM signal. The proposed Build Alternatives would encroach within this radial field. Through coordination with American Tower Corporation, these underground wires would be monitored and adjusted during construction to avoid impacts to the tower operation. Further coordination would be needed during the design phase of the project.

In addition, there are other potential right of way impacts associated with the skewed and straight bridge crossing options for the bridge over the M-Canal. The skewed bridge would result in 0.5 acres from a portion of the M-Canal owned by the City of West Palm Beach. The straight bridge crossing would result in 7.3 acres from the Pond Cypress Natural Area owned by Palm Beach County. After the Public Hearing, the straight bridge crossing was modified, as discussed in **Section 3.2.3.7**, and would result in 1.23 acres from the Pond Cypress Natural Area.

If needed, the FDOT would carry out a Right of Way and Relocation Program in accordance with Florida Statute 339.09 and the Uniform Relocation Assistance and Real Property Acquisition Policies Act of 1970 (Public Law 91-646 as amended by Public Law 100-17). The brochures that describe in detail the Department's relocation assistance program and right of way acquisition program are "Your Relocation: Residential", "Your Relocation: Business, Farms, and Nonprofit Organizations", "Your Relocation: Signs" and "The Real Estate Acquisition Process". All of these brochures were made available at the Public Hearing.

4.7 UTILITIES AND RAILROADS

Information was obtained regarding the ownership, type, and location of the existing utilities within the study area in order to evaluate potential surface and subsurface utility conflicts. A summary of the utilities within the project corridor is provided in **Table 4-4**. This table lists the possible utility owners around the proposed project corridor. No railroads are located within the study area.

Impacts to the existing utilities adjacent to the intersection at Okeechobee Boulevard would be anticipated for the grade separated option. No impacts would result from the

at-grade intersection option. If the grade separated option is selected, the need for utility relocations and associated costs would be determined during final design.

No impact to utilities is anticipated for the remainder of the project corridor beyond Okeechobee Boulevard. However, additional coordination and verification would be necessary during design and construction. If utility relocations are necessary, then mitigation measures for utility disruptions would include the following measures:

- Minimizing or eliminating impact to major existing utilities.
- Maintaining utility connections in temporary locations.
- Minimizing the time without service.
- Installing alternate or new service before disconnecting the existing service.
- Allowing service disruption only during periods of non-usage or minimum usage.

Table 4-4: Existing Utilities within the Project Corridor

Owner	Type	Location
AT&T	Buried phone line	Along the south side of Okeechobee Boulevard.
City of West Palm Beach	16" water main and 12" force main	Along the north side of Okeechobee Boulevard.
City of West Palm Beach	12" high density polyethylene (HDPE) water main	Outside of the east FDOT right of way line along the berm separating the Pond Cypress Natural Area and the West Palm Beach Water Catchment Area. At the M-Canal, it turns west to cross the FDOT right of way and then turns north to cross over the M-Canal along the control structure. It then continues outside of the west FDOT right of way line within the berm separating the Ibis Preserve and Water Catchment Area where it then enters the development.
City of West Palm Beach	12" ductile iron water main	From the Ibis entrance to the City of West Palm Beach pump station, along the west side of the County's right of way.
City of West Palm Beach	20" ductile iron water main	From the City of West Palm Beach pump station to Northlake Boulevard, along the west side of the County's right of way.
City of West Palm Beach	16" ductile iron force main	From the Ibis entrance to the Northlake Boulevard, along the west side of the County's right of way.
Florida Public Utilities	Buried gas main	Just west of FDOT right of way from Okeechobee Boulevard to STA 208+80.
FPL	Overhead electric distribution	Along the south side of Okeechobee Boulevard and crossing Okeechobee Boulevard at the SR 7 intersection.
FPL	Buried electric	Along the north side of Okeechobee Boulevard.

Table 4-4: Existing Utilities within the Project Corridor (continued)

Owner	Type	Location
FPL	Buried electric	Inside the east FDOT right of way line, just north of Okeechobee Boulevard, from approximate STA 218+48 to 225+29.
FPL	Overhead electric transmission	160 foot wide easement crossing over the County's two lane extension of SR 7 between STA 282+32 and 284+56. Crossing located adjacent to the Village of Royal Palm Beach.
FPL	Overhead electric transmission	Parallel to the County's right of way for the two lane extension of SR 7. Adjacent to the Village of Royal Palm Beach. Located within a 185 foot wide easement.
FPL	Overhead electric distribution	Along the south bank of the M-Canal between 60th Street and the AM tower site.
Palm Beach County	36" ductile iron reclaimed water main	Twelve feet from the inside of the west FDOT right of way line from Okeechobee Boulevard to approximate STA 213+70 and then continues five feet outside of the west FDOT right of way line to approximate STA 225+29 where it then jogs to the east and continues north, 10 feet from the inside of the FDOT right of way. It continues within the FDOT right of way for another half mile beyond the County's two lane extension of SR 7.

4.8 ARCHAEOLOGICAL AND HISTORICAL

A Cultural Resource Assessment, conducted in accordance with the procedures contained in 36 CFR Part 800 and including background research and a field survey coordinated with the State Historic Preservation Officer (SHPO), was performed for the project. As a result of the assessment, one site (8PB14880) was identified. The FHWA, after application of the National Register Criteria of Significance, found that the site was not eligible for listing on the National Register of Historic Places. The SHPO rendered the same opinion. Based on the fact that no additional archaeological or historic sites or properties are expected to be encountered during subsequent project development, the FHWA, after consultation with the SHPO, has determined that no National Register properties would be impacted. The SHPO coordination letter is provided within **Appendix D**.

As noted by the Department of State in the ETDM Summary Report (**Appendix C**), the project corridor was previously subjected to a Cultural Resource Assessment Survey in 2000 (DHR Survey #6137). No archaeological or historic resources were identified during the 2000 survey, and the State Historic Preservation Officer (SHPO) determined that the undertaking would have no effect on any historic properties. As part of its ETDM response, the Department of State noted that no survey was necessary if the project alternatives are the same alternatives surveyed as part of the previous 2000 survey. The current project is located within the area surveyed in 2000 and an updated Florida Master Site File (FMSF) search identified no National Register-eligible sites located within the archaeological area of potential effect. Based on this, no archaeological survey was conducted.

A historic resources survey was conducted to ensure that there were no additional resources within the project area that became historic since the previous survey was conducted in 2000. The historic resources survey resulted in the identification of one historic resource within the project area. The one identified historic resource, the M-Canal (8PB14880), does not have any distinguishing engineering features and is considered ineligible for listing in the National Register either individually or as part of a historic district.

4.9 RECREATIONAL/PARKLAND

There are four recreation facilities and/or wildlife and waterfowl refuge areas adjacent to the project: the Pond Cypress Natural Area, Grassy Waters Preserve, Ibis Preserve and Loxahatchee Slough Natural Area. These areas are illustrated in **Figure 4-11.**

Figure 4-11: Existing Conservation and Parkland Sites

4.9.1 POND CYPRESS NATURAL AREA

The western and northern boundaries of the Pond Cypress Natural Area are immediately adjacent to the existing transportation corridor owned by Palm Beach County (**Figure 4-11**). This transportation corridor was originally created as part of a land swap between Palm Beach County and Minto Communities, a real estate developer. Prior to 2004, Minto owned the northern section of what is now the Pond Cypress Natural Area and the County owned land to the south adjacent to Okeechobee Boulevard. In 2004, Palm Beach County and Minto entered into an agreement to exchange these two parcels. Minto would acquire developable land adjacent to Okeechobee Boulevard and the County would obtain land with higher quality environmental features. Once the County came into ownership of this parcel, a portion was reserved for transportation purposes and the remainder became part of the Pond Cypress Natural Area.

The Pond Cypress Natural Area contains a western bulge of the historic Loxahatchee Slough, while the rest of the site contains buffer lands and tributary drainage ways that are historically connected by sheet flow eastwards to the slough. The size of the Pond Cypress Natural area is 1,736 acres (702.83 hectares). It contains a high quality mosaic of mesic flatwoods, wet prairie, strand swamp, depression marsh, prairie hammock, and dome swamp plant communities and provides foraging and potential breeding habitat for the snail kite which is listed as endangered by USFWS and the Florida Fish and Wildlife Conservation Commission. Other endangered and threatened animal species documented on the site include Audubon's crested caracara, Florida sand hill crane, wood stork, and least tern.

Palm Beach County has identified future recreational improvements to the Pond Cypress Natural Area including the construction of management roads, trails, educational kiosks, and a parking facility. The proposed extension of SR 7 would not impact these planned facilities.

Impacts to the Pond Cypress Natural Area as a result of the bridge crossing options presented within **Section 3.2.3.7** range from none to 7.3 acres. The Pond Cypress Natural Area can be avoided by partially locating the bridge outside of the FDOT right of way (**Figure 3-36**); however, it would encroach within a section of the M-Canal owned by the City of West Palm Beach that is protected under a Special Act by the Florida Legislature (Chapter 67-2169). After the Public Hearing, the crossing option over the M-Canal was modified to reduce the amount of encroachment into the Pond Cypress Natural Area (**Figure 3-38**). The design speed for the curve across the bridge was reduced from 45 MPH to 40 MPH. This results in 1.23 acres of encroachment (0.07% of the Pond Cypress Natural Area) as opposed to 7.3 acres without these minimization efforts. The design speed for the segments north and south of the M-Canal crossing would remain at 45 MPH.

Coordination with Palm Beach County occurred to ensure that the proposed project would not jeopardize the function, characteristics, or attributes of the Pond Cypress Natural Area. As a result, the Palm Beach County Board of County Commissioners approved a resolution on October 16, 2012 stating its support for the project and that

they have no objection to the proposed 1.23 acre encroachment (under Straight Bridge Crossing Option - Modified) of the Pond Cypress Natural Area provided that the Conservation Lands Protection Ordinance is satisfied. In order to compensate for impacts within the Pond Cypress Natural Area and satisfy the County's Conservation Lands Protection Ordinance, an estimated 23-acre area of the FDOT-owned Rangeline property between PGA Boulevard and Jupiter Farms will be transferred to County ownership.

Public comments with regard to the effects on the protected activities, features, or attributes of the Pond Cypress Natural Area were solicited during the Public Hearing on March 21, 2012. Information with regard to this issue was provided on a display board and discussed during the formal presentation. A copy of the display board and slides from the presentation are provided within **Appendix K**. No comments from the public were received.

Based on that no other practicable alternative exists, the effort to reduce the encroachment area, the minor amount of land being taken, and the support received from the Palm Beach County Board of County Commissioners and Palm Beach County Department of Environmental Resources Management, the proposed encroachment into the Pond Cypress Natural Area is considered a *de minimis* use. Concurrence by FHWA with the de minimis findings is provided through signature of the Finding of No Significant Impact (FONSI). Correspondence and materials supporting the *de minimis* finding are provided in **Appendix K** and include the following:

- Letter from the Florida Department of Transportation to the Palm Beach County Department of Environmental Resources Management requesting concurrence for a *de minimis* finding. This letter includes a concurrence block signed by Palm Beach County signifying their agreement with the *de minimis* finding. The letter also includes a copy of the resolution passed by the Palm Beach County Board of County Commissioners referenced above.

- Copy of the board presented to the public during the Public Hearing describing the potential Section 4(f) impacts to the Pond Cypress Natural Area. No comments were received from the public with regard to this issue.

In addition to Section 4(f) concerns, the Pond Cypress Natural Area is considered a compensatory mitigation site by USACE as part of the County's two lane extension of SR 7. The USACE stated in letters dated May 27, 2010 and April 2, 2012 that there would be a high potential that USACE would not authorize any impacts to an existing compensatory mitigation site unless it was in the public's interest. In response to USACE's statement that this project will need to be in the public's interest, the benefits of extending SR 7, in conjunction with the proposed mitigation plan, would more than offset the impacts as follows:

- The extension of SR 7 would benefit the quality of life for area residents has it would enhance regional connectivity and reduce travel times. An efficient roadway network also improves air quality as vehicles spend less time idling at intersections.

- FDOT is committed to transferring ownership of the Rangeline right of way between Okeechobee Boulevard and the M-Canal, an area approximately 82 acres in size. Preserving this section of right of way is in the public's interest as it would maintain the wildlife connectivity between the Pond Cypress Natural Area and Grassy Waters Preserve.

- FDOT is committed to preserving an approximate 170 foot wide buffer between the limit of construction line and western boundary of the Grassy Waters Preserve, an area approximately 56 acres in size. Preserving this area of right of way is in the public's interest as it would create a buffer for the Grassy Waters Preserve. This, in combination with the reduced median width, would prohibit any widening in the future.

- FDOT is committed to transferring ownership of the Rangeline right of way between Northlake Boulevard and SR 710, an area approximately 44 acres in size, to Palm Beach County for conservation. Preserving this area of right of way is in the public's interest as this section of right of way is located between the Loxahatchee Slough and Grassy Waters Preserve and would protect it from future development while maintaining the hydrologic connection.

- FDOT is committed to transferring ownership of the Rangeline right of way between SR 710 to Jupiter Farms, an area approximately 90 acres in size, to Palm Beach County for conservation. This section of right of way bifurcates the Loxahatchee Slough. Preserving this section of right of way for conservation purposes is in the public's interest as it would protect the Loxahatchee Slough from any future extension north of SR 710 and maintain its hydrologic connection.

- The donation of the Rangeline properties listed above is in the public's interest as it would increase the amount of public lands in the area available for conservation and other purposes consistent with the management plans of the adjacent preserves.

Follow-up coordination meetings with the USACE were held in August 13, 2013 and in November 25, 2014 (minutes are provided in the Appendix E of the EA). During these meetings, USACE stated that the permit application would need to include additional documentation supporting why the corridors to the west were eliminated. Since then, FDOT prepared a Corridor Addendum that analyzed these corridors. The addendum concludes that these corridors would result in significant impacts involving numerous property and residential impacts and that none of the western corridors are acceptable alternatives to Corridor 3. During the meeting held on November 24, 2014, USACE acknowledged the mitigation plan prepared for this project, including mitigation for the Pond Cypress Natural Area. In addition, they explained that final comments and acceptance to the proposed impacts and mitigation plan will be provided during the permit application process. FDOT agreed that additional coordination will occur as the project moves closer to permitting.

4.9.2 GRASSY WATERS PRESERVE

The Grassy Waters Preserve (**Figure 4-11**) is designated by the Florida Legislature as a Water Catchment Area and supplies drinking water to over 130,000 people in West Palm Beach and surrounding areas. The Preserve is owned and managed by the City of West Palm Beach. It is approximately 12,800 acres in size and also functions as a wildlife refuge attracting numerous wading birds and water fowl. It is located west of SR 710 and is comprised of two sites, one located on the north side of Northlake Boulevard, and one on the south side of Northlake Boulevard. The proposed extension of SR 7 abuts only the western edge of the property between the M-Canal and Northlake Boulevard for a distance of 3.15 miles.

On the south side of Northlake Boulevard, there is a nature center with parking and 1,500 feet of boardwalk. On the north side of Northlake Boulevard, there are several buildings with parking, including a nature center and the regional offices of the Florida Fish and Wildlife Conservation Commission. The north side offers hiking trails and a lake where catch-and-release fishing is permitted.

Construction of a new two mile hiking and biking trail, the Hog Hammock Trail (on the north side) is anticipated to be complete in 2011 and there are plans for the expansion of boardwalks and overlooks on the south side. Long range plans to connect this area of the county wide blue-ways system and hiking/biking trails in the adjacent Pond Cypress Natural Area are in development. The proposed extension of SR 7 would not impact these planed facilities.

The prairie and marsh wetlands attract numerous wading birds and water fowl such as the roseate spoonbill, great blue heron, great egret, limpkin, wood duck, and teal duck. It offers foraging habitat for species such as the red-shouldered hawks, osprey, American kestrel, and bald eagles as well as foraging and nesting habitat for the snail kite and Florida sand hill crane, both listed as an Endangered Species under the Endangered Species Act.

The preserve offers nature center pavilions, boardwalk trails, hiking, canoeing, nature programs, fishing, and biking. The Grassy Waters Preserve was historically part of the Everglades ecosystem and continues to serve as the primary hydrologic head pool for the Comprehensive Everglades Restoration Program (CERP) FLOW-WAY 1 initiative.

All of the proposed roadway and drainage improvements are within the existing FDOT and Palm Beach County right of way; therefore, no right of way from the Grassy Waters Preserve would be required. No direct impact is expected within the Grassy Waters Preserve. Furthermore, all construction activities would remain within the existing right of way; therefore, no temporary impacts are anticipated.

The City of West Palm Beach has raised concern about the project and the possibility of a hazardous material spill occurring near the preserve from a truck accident. Measures identified to protect the preserve from this kind of event are discussed in **Section 4.15.2**.

There are several mitigation areas within the Grassy Waters Preserve. No direct impacts would occur within the mitigation areas. One mitigation area, a 165 acre site used by the Lennar Corporation as an off-site mitigation site for impacts associated with the Bay Hill community, occurs adjacent to the project. Based on a determination of applicability completed by FHWA on October 27, 2011, the Grassy Waters Preserve is a Section 4(f) resource however no encroachment into the Preserve is proposed.

4.9.3 IBIS PRESERVE

The Ibis Preserve (**Figure 4-11**) was created as part of mitigation for the Ibis Golf and Country Club. There are no known recreational activities or facilities. The preserve is dedicated for wetland preservation and is predominantly a freshwater marsh. Due to its proximity to the Grassy Waters Preserve and the Pond Cypress Natural Area, it is assumed that similar species utilize this wetland area for foraging and nesting. The size of the Ibis Preserve is 366 acres (148.14 hectares). The Preserve is located south of the Ibis Golf and Country Club and north of the M-Canal.

All of the proposed roadway and drainage improvements are within the existing FDOT and Palm Beach County right of way; therefore, no additional right of way would be required. The eastern boundary of the preserve area immediately abuts the existing transportation right of way. Based on a determination of applicability completed by FHWA on October 27, 2011, the Ibis Preserve is not a Section 4(f) resource since it is not publicly accessible.

4.9.4 LOXAHATCHEE SLOUGH NATURAL AREA

The Palm Beach County Environmental Resource Management considers the Loxahatchee Slough (**Figure 4-11**) to be a significant wetland. The Slough is part of a north/south wildlife/greenway corridor which extends from Palm Beach County's Riverbend Park south to the Grassy Waters Preserve. The Loxahatchee Slough Natural Area is located north of the project terminus on the north side of existing right of way along Northlake Boulevard. The size of the site is approximately 12,836 acres (5,194.54 hectares).

Based on a determination of applicability completed by FHWA on October 27, 2011, the Loxahatchee Slough Natural Area is a Section 4(f) resource; however, no improvements are proposed within or immediately adjacent to the Loxahatchee Slough Natural Area. Since the proposed project lies south of the Loxahatchee Slough Natural Area, no direct impacts to existing or planned facilities are anticipated.

4.10 VISUAL/AESTHETIC

Under the grade separated interchange option at Okeechobee Boulevard, visual impacts would occur as the top of the proposed bridge structure would be elevated by approximately 25 feet above the existing intersection. This structure would block the view for the commercial properties on either side of Okeechobee Boulevard. In addition, the overpass structure would also be visible by the Mezzano condominium

community located in the northeast quadrant of the SR 7 and Okeechobee Boulevard intersection. No impacts would result from the at-grade intersection option at the intersection.

North of the intersection at Okeechobee Boulevard, the visual and aesthetic impacts along the project corridor are minimal as existing visual barriers along the residential borders would remain in-place. A berm is generally located along the eastern edge of the Porto Sol development, Royal Palm Beach, Acreage, and the Ibis Golf and Country Club communities.

4.11 AIR

The project corridor is located in an area which is designated as attainment for all of the National Ambient Air Quality Standards under the criteria provided in the Clean Air Act. Therefore, the Clean Air Act conformity requirements do not apply to the project. The project was reviewed for air quality impacts consistent with the guidance provided by the FHWA.

The project area is currently designated as being in attainment for the following criteria air pollutants: ozone, nitrogen dioxide, particulate matter (2.5 microns in size and ten microns in size), sulfur dioxide, carbon monoxide, and lead. This has been verified by review of the project area on the US Environmental Protection Agency Green Book website.

The project alternatives were subjected to a Carbon Monoxide (CO) screening model that considers various conservative worst-case assumptions related to site conditions, meteorology, and traffic. The FDOT's screening model, CO Florida 2012 (released January 9, 2012) uses the latest US Environmental Protection Agency approved software (MOVES and CAL3QHC) to produce estimates of one-hour and eight-hour Carbon Monoxide at default air quality receptor locations. The one-hour and eight-hour estimates can be directly compared to the one-hour and eight-hour National Ambient Air Quality Standards for Carbon Monoxide, which are 35 parts per million and 9 parts per million, respectively.

The intersection of SR 7 and Okeechobee Boulevard was identified as the intersection with the highest volume of vehicle traffic. The traffic data input used in the evaluation was the forecasted PM peak hour volumes taken from the Design Traffic Technical Memorandum developed for the project. The Build and No-Build Alternatives were evaluated using the opening year (2020) and the design year (2040) PM peak hourly traffic volumes. The proposed posted speed limit of 45 MPH for the intersection approaches was used for the analysis. Estimates of Carbon Monoxide were predicted for the default receptors which are located from 10 feet to 150 feet from the edge of roadway.

Based on the results from the screening model, the highest project-related Carbon Monoxide one-hour and eight-hour levels are not predicted to meet or exceed the one-hour or eight-hour National Ambient Air Quality Standards for this pollutant with

either the No-Build or Build Alternatives. Therefore, the project passes the screening model.

This document does not incorporate an analysis of the Green House Gasses (GHG) emissions or climate change effects of each of the alternatives because the potential change in GHG emissions is very small in the context of the affected environment. Because of the insignificance of the GHG impacts, those local impacts will not be meaningful to a decision on the environmentally preferable alternative or to a choice among alternatives. For these reasons, no alternatives-level GHG analysis has been performed for this project. An Air Quality Screening Memorandum was prepared.

4.12 NOISE

A traffic noise impact analysis was conducted for the project. The analysis conducted is consistent with the latest FHWA guidance document "Highway Traffic Noise: Analysis and Abatement Guidance." It is also consistent with the revised noise guidance from FDOT's PD&E Manual, Part 2, Chapter 17, dated May 24, 2011.

The traffic noise impact analysis began with the identification of noise sensitive areas for evaluation. These noise sensitive areas were identified as follows:

- Area A: Baywinds; townhouses located east of the alignment.
- Area B: Porto Sol; new single family residential development located west of the alignment.
- Area C: Royal Palm Beach; single family residences located west of the alignment.
- Area D: The Acreage; single family residences located west of the alignment.
- Area E: Ibis Golf & Country Club – south portion; townhouses located west of the alignment.
- Area F: Ibis Golf & Country Club – north portion and Amli Apartments; located west of the alignment.

The FHWA has established noise abatement criteria to identify noise impacts from roadway projects. Federal Regulation 23 CFR 772 states that: "Noise impacts occur when the predicted traffic noise levels approach or exceed the noise abatement criteria levels, or when the predicted traffic noise levels substantially exceed the existing noise levels." For residential land uses, FHWA identifies 67 dBA (weighted decibel scale) as the threshold for determining if a noise impact would occur. FDOT goes beyond the federal requirement and uses 66 dBA as the threshold. In addition, FDOT considers that noise levels would be substantially exceeded if sound levels increase by 15.0 dBA or more over existing conditions.

For this project, existing sound levels range between 46.2 and 62.7 dBA. Under the No-Build Alternative for the year 2040, noise levels would range between 46.7 and 65.2 dBA. For the West, Center, and East Alignment Alternatives, noise levels in the year 2040 would range between 53.5 and 66.8 dBA. The area where the 66.0 dBA threshold would be exceeded is in the Baywinds community and would involve 17 receptors. This community is located just north of the SR 7 and Okeechobee Boulevard intersection. These impacts would occur regardless of the Build Alternative selected.

For the Preferred Alternative (a modified version of the West Alignment Alternative), noise levels in the year 2040 would range between 53.5 and 68.7 dBA. The area where the 66.0 dBA threshold would be exceeded is in the Baywinds community with 17 receptors and the Amli Apartments with 24 receptors. The Amli Apartments are located adjacent to the Ibis Golf and Country Club and just south of Northlake Boulevard.

Noise levels are expected to increase along other parts of the project by 2040 regardless of the Build Alternative selected. Within the Porto Sol community, sound levels are expected to increase from 59.1 dBA (existing) to 64.6 dBA (2040). Within Royal Palm Beach, sound levels are expected to increase from 54.4 dBA to 59.4 dBA. The Acreage community could experience an increase from 55.4 dBA to 60.5 dBA, and the southern half of the Ibis Golf and Country Club could experience an increase of noise from 52.6 dBA to 64.7 dBA. The receptors within these segments are not considered impacted since the thresholds established by the FDOT and FHWA were not exceeded.

A noise barrier wall was analyzed to determine if it could effectively reduce the traffic noise level at the impacted receptors and if the cost of doing so was reasonable given the number of receptors predicted for the noise barrier to protect. For the Baywinds community, the noise barrier analysis shows that a barrier of 16 feet in height would be reasonable and would achieve the greatest number of receptors receiving a noise reduction of at least 5 dBA. The proposed barrier is approximately 1,539 feet in length and 16 feet in height. The number of benefited receptors receiving an insertion loss of 5 dBA or more is 57, resulting in an average cost per receptor of $12,960. Since this cost is well below the upper limit of $42,000, the barrier would be cost feasible. A map showing the impacted receptors which would benefit from a noise wall is shown in **Figure 4-12**.

For the Amli Apartments under the Preferred Alternative, the noise barrier analysis shows that a barrier of 20 feet in height would be reasonable and would achieve the greatest number of receptors receiving a noise reduction of at least 5 dBA. The proposed barrier is approximately 851 feet in length and 20 feet in height. The number of benefited receptors receiving an insertion loss of 5 dBA or more is 19, resulting in an average cost per receptor of $26,863. Since this cost is well below the upper limit of $42,000, the barrier would be cost feasible. A map showing the impacted receptors which would benefit from a noise wall is shown in **Figure 4-13**.

Community input would be required to determine their desire for the construction of the noise barrier. In addition, a detailed noise analysis may be required during the final design process to further analyze the need for a noise barrier—as well as the specific height and length that should be constructed—based upon the ultimate design of the

roadway. The FDOT is committed to the construction of feasible and reasonable noise abatement measures at the noise-impacted locations identified on **Figures 4-12** and **4-13** contingent upon the following conditions:

- Detailed noise analysis during the final design process supports the need, feasibility and reasonableness of providing abatement;
- Cost analysis indicates that the cost of the noise barrier will not exceed the cost reasonable criterion;
- Community input supporting types, heights, and locations of the noise barrier is provided to the District Office; and,
- Safety and engineering aspects as related to the roadway user and the adjacent property owner have been reviewed and any conflicts or issues resolved.

If, during the final design phase, abatement is no longer considered feasible or reasonable for a given location(s), such determination(s) will be made prior to requesting approval for construction advertisement. Commitments regarding the exact abatement measure locations, heights, and type (or approved alternatives) will be made during the final design phase and at a time before the construction advertisement is approved.

Figure 4-12: Potential Noise Wall along Baywinds Community (All Build Alternatives)

Figure 4-13: Potential Noise Wall along the Amli Apartments (West Alignment Alternative - Modified)

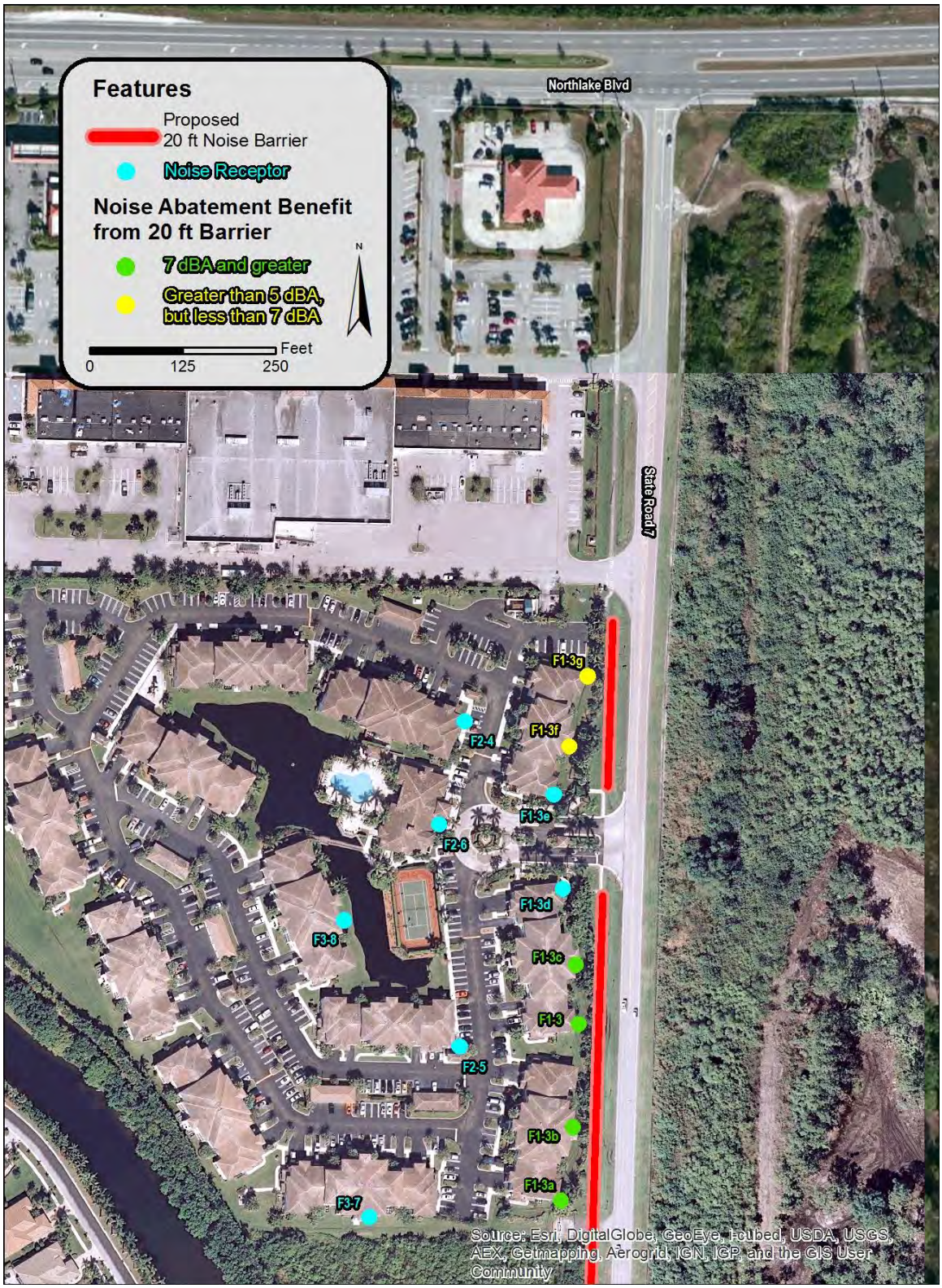

4.13 WETLANDS

A wetland evaluation was conducted and documented within the Wetland Evaluation Report to assure the protection, preservation, and enhancement of wetlands to the fullest extent practicable. Multiple coordination meetings with the South Florida Water Management District, US Environmental Protection Agency, and USACE have taken place during the PD&E Study and will continue throughout the life of the project regarding wetland impacts and mitigation measures. Meetings with the public and permitting agencies are summarized in **Chapter 5**. A list of the meetings held with the permitting agencies is provided within **Table 5-1**.

Wetland resources within the project study area were initially identified through the review of several mapping resources. Subsequent to the review of all available reference materials, field reconnaissance efforts were conducted during which each wetland was classified and characterized using USFWS's Classification of Wetland and Deepwater Habitats of the United States (Cowardin, et al. 1979).

All permitting and mitigation for the two lane segment from Okeechobee Boulevard to 60th Street, including any future expansion to four lanes, has been completed by Palm Beach County. Palm Beach County recently completed a two lane roadway from Okeechobee Boulevard to Persimmon Boulevard and has started construction for the remaining segment up to 60th Street. Mitigation for Palm Beach County's two lane roadway was addressed within the Section 1 parcel (now part of the Pond Cypress Natural Area). The wetland impacts are addressed in the South Florida Water Management District and Army Corps of Engineers permit for the County project.

Prior to 2004, Minto, a real estate developer, owned the northern section of what is now the Pond Cypress Natural Area (Section 1) and the County owned land to the south adjacent to Okeechobee Boulevard. In 2004, the County and Minto entered into an agreement to exchange these two parcels. Minto would acquire developable land adjacent to Okeechobee Boulevard and the County would obtain land with higher quality environmental features. Once the County came into ownership of this parcel, a portion was reserved for transportation purposes and the remainder served as mitigation and became part of the Pond Cypress Natural Area. No additional impacts are anticipated between Okeechobee Boulevard and 60th Street.

Between 60th Street and Northlake Boulevard, wetlands were observed, classified, and documented within the existing project right of way. **Table 4-5** provides an overview of the type of wetlands found within the existing right of way and corresponding Florida Land Use Cover Forms Classification System (FLUCFCS) code.

Table 4-5: Identification of Wetlands from 60th Street to Northlake Boulevard within Existing Right of Way

Wetland Type	FLUCFCS Code	Total Acres Within Existing Right of Way	Percentage of Total
Freshwater Marshes – Native Dominated	6410A	25.84	22.6%
Freshwater Marsh – Exotic Dominated	6410B	2.20	1.9%
Mixed Shrubs – Exotic Dominated	6172	23.85	20.8%
Hydric Pine – Native Dominated	6250A	34.66	30.3%
Hydric Pine – Exotic Dominated	6250B	14.26	12.5%
Vegetated Ditches	5100	13.09	11.4%
Channelized Canals - Unvegetated	5100	0.64	0.6%
Total	**-**	**114.53**	**100.0%**

The Build Alternatives identified as the West, Center, and East Alignment Alternatives would result 114.5 acres of direct wetland impacts, including 0.64 acres of surface water impacts, since these options included full use of the existing right of way. The Preferred Alternative (a modified version of the West Alignment Alternative) would result in 52.9 acres of direct wetland impact (including 0.26 acres of surface water impacts).

There would be no difference in the amount of impact between the various intersection options. For the crossing over the M-Canal, the Straight Bridge Crossing Option (**Figure 3-37**) would result in an additional 8.0 acres of wetland impacts when compared to the Skewed Bridge Crossing Option (**Figure 3-36**). This includes 7.27 acres within the area outside of the existing transportation right of way and 0.73 acres within existing right of way. The modified version of the Straight Bridge Crossing Option would result in an additional 0.6 acres of wetland impact. Details related to the modified version of the Straight Bridge Crossing Option are provided within **Section 3.2.3.7**.

The Uniform Mitigation Assessment Method (UMAM) functional loss per acre for individual wetland classification types ranged from 0.47 units (for palustrine scrub-shrub wetlands dominated by exotic/nuisance vegetation located north of the M-Canal) to 0.83 units (for native-dominated palustrine, forested pine wetlands located south of the M-Canal). For the West, Center, and East Alignment Alternatives, the direct functional loss (UMAM functional loss x acres) would amount to 77.03 units. If the Straight Bridge

Crossing Option is constructed, an additional 7.20 units of functional loss would be incurred.

For the Preferred Alternative (a modified version of the West Alignment Alternative), the direct functional loss would amount to 33.6 units. The modified version of the Straight Bridge Crossing Option would result in an additional 0.53 units.

When comparing the direct wetland impact acres and associated functional loss for all build alternatives, it should be noted that the Preferred Alternative represents a 54 percent decrease in direct wetland impacts and 56 percent decrease in wetland functional loss when compared to the West, Center, and East Alignment Alternatives. For the Preferred Alternative, the greatest reduction in wetland impact occurs within the native-dominated higher quality marshes (87 percent impact reduction north of M-Canal) and hydric pine (92 percent impact reduction north of M-Canal). Additional details and information is provided within the Wetland Evaluation Report prepared under separate cover.

FDOT is committed to minimizing wetland impacts and an effort has been made throughout the project. Through the selection of Corridor 3, no roadway would be constructed within the FDOT's existing Rangeline right of way between Okeechobee Boulevard and the M-Canal. This section of right of way is equal to 80 acres of wetlands. Instead, Corridor 3 positions the proposed extension of SR 7 adjacent to existing developed areas formed by the Village of Royal Palm Beach, Acreage, and Ibis Golf and Country Club. The selection of Corridor 3 also maintains the connectivity between the Pond Cypress Natural Area and Grassy Waters Preserve. Efforts to reduce wetlands impacts would continue through the design phase.

A variety of mitigation options have been considered for this project. FDOT is committed to providing mitigation to compensate for unavoidable wetland impacts and has evaluated various on- and off-site mitigation options that will provide the best solution in terms of the complex wetland habitat assemblages. Extensive coordination with the permitting agencies has been conducted and a Conceptual Mitigation Plan for the Preferred Alternative was prepared (**Appendix I**). Final determination of jurisdictional wetland areas and mitigation requirements would occur between the FDOT and the regulatory agencies during the final design phase. Any wetland effects associated with this project would be permitted through the following agencies: USACE (Section 404 Dredge and Fill Permit), South Florida Water Management District (Environmental Resource Permit) and Florida Department of Environmental Protection (National Pollutant Discharge Elimination System Permit).

FDOT is committed to minimizing wetland impacts to the greatest extent possible and to mitigating wetland impacts that result from the proposed project. Suitable wetland mitigation would be designed and permitted to offset all impacts resulting from construction of this project, and would satisfy all mitigation requirements of Part IV, Chapter 373, Federal Statute (FS) and 33 USCs, 1344. Below are key elements of the wetland mitigation plan for the Preferred Alternative.

- The estimated 10.1 acres of direct herbaceous wetland impacts and 25.6 acres of direct forested wetland impact located within the portion of the County-owned right of way will be mitigated at the Pine Glades North PROMA.

- The estimated 14.5 units of functional loss resulting from secondary impacts attributed to proposed construction within the County-owned right of way will be mitigated at the Pine Glades North PROMA.

- The estimated 5.8 acres of direct herbaceous wetland impacts and 10.8 acres of direct forested wetland impact located within the FDOT right of way will be mitigated through on-site mitigation via wetland restoration, enhancement, and preservation within the easternmost 56 acres of un-used FDOT right of way between the M-Canal and Northlake Boulevard. The restoration of the un-used right of way adjacent to the Grassy Waters Preserve would create additional habitat for the listed species common to the project area. These restored wetlands would be monitored for listed species usage.

- The estimated 3.4 units of functional loss resulting from secondary herbaceous marsh impacts attributed to proposed construction within the FDOT right of way will be mitigated through the Dupuis Reserve PROMA.

- The estimated 2.7 units of functional loss resulting from secondary forested wetland impacts attributed to proposed construction within the FDOT right of way will be mitigated through on-site mitigation via wetland restoration, enhancement, and preservation within the easternmost 56 acres of un-used FDOT right of way between the M-Canal and Northlake Boulevard. The restoration of the un-used right of way adjacent to the Grassy Waters Preserve would create additional habitat for the listed species common to the project area.

- The estimated 0.16 acres of direct herbaceous marsh impacts and 0.43 acres of direct forested wetland impact located within the Section 1 Mitigation Area will be mitigated through on-site mitigation via wetland restoration, enhancement, and preservation within the un-used FDOT right of way between the M-Canal and Northlake Boulevard.

4.14 WATER QUALITY

A Water Quality Impact Evaluation was completed for the project. The proposed project would cross over the M-Canal, a Class 1 "Potable Water Supply" waterbody. The M-Canal receives water from Lake Okeechobee, via the L-8 Canal, and from the Grassy Waters Preserve. The M-Canal ultimately flows into Lake Mangonia and Clear Lake. The City of West Palm draws its drinking water directly from Lake Mangonia.

The City of West Palm Beach and residents from the Ibis Golf and Country Club have expressed concern about the possibility of a hazardous material spill near the Grassy

Waters Preserve and M-Canal. Further discussion about protecting both resources from a hazardous material spill is provided within **Section 4.15.2**.

The project lies within the designated boundaries of the Biscayne Aquifer. A Sole Source Aquifer Review was conducted by the US Environmental Protection Agency to determine if the project poses potential adverse health or environmental impacts. The US Environmental Protection Agency determined that the project is not expected to cause significant impact to the aquifer system. A copy of the letter, dated July 1, 2011, is provided within **Appendix D**.

The proposed storm water facility design would include, at a minimum, the water quality design requirements for water quality impacts as required by the South Florida Water Management District in Rules 40E-4, 40E-40, and 40E-400. No impacts to water quality are anticipated.

4.15 CONTAMINATION

4.15.1 EXISTING IDENTIFIED CONTAMINATION

A Contamination Screening Evaluation Report was prepared to determine the potential for encountering contamination within the existing or proposed right of way along the project corridor. Preliminary review of the project identified eight sites (**Table 4-6**) as having the potential for contamination. Of these eight sites, three properties were rated as "No" risk potential, three properties as "Low" risk potential, and two properties as "Medium" risk potential. No "High" risk potential properties were identified in close proximity to the project corridor. No sites exhibit any currently known or unresolved contamination concerns. Therefore the current potential for contamination issues within or directly adjacent to the project corridor is minimal. A Level II Contamination testing is recommended for any sites that are ranked as "Medium" or 'High" risk prior to construction.

Table 4-6: Potential Contamination Site Ranking

Site ID	Address	Description	FDEP Facility ID	Contamination Concern	Storage Tanks	Distance from ROW	Rank
1	SE Corner of Okeechobee Boulevard and SR 7	Vacant Undeveloped Lot	9806343	Petroleum	Storage Tanks	Adjacent; 100 ft SE	No
2	10155 Okeechobee Boulevard	Super Target	None	Petroleum/ Solvents	No	Adjacent; 200 ft W	No
3	7075 East Sandhill Way	NPBCID Ibis Pump Station No. 2	9200879	Petroleum	Yes (AST)	Adjacent; 80 ft W	Low
4	8001 East Sandhill Way	Ibis Golf Club Maintenance Facility	9102257	Petroleum/ Chlorinated Herbicides/ Organo-phosphate Pesticides	Yes (AST)	Adjacent; 300 ft W	Medium
5	8740 N SR 7	Ibis Lift Station #100	9401440	Petroleum	Yes (AST)	Adjacent; 50 ft W	Low
6	10130 Northlake Boulevard, Suite 116	Ibis Dry Cleaners	None	Solvents	No	Adjacent; 250 ft W	No
7	10130 Northlake Boulevard	Publix	9811039	Petroleum/ Solvents	Yes (AST)	Adjacent; 550 ft W	Low
8	10140 Northlake Boulevard	Ibis Sunoco	980118	Petroleum	Yes (AST)	650 ft W	Medium

4.15.2 AVOIDING POSSIBLE CONTAMINATION OF GRASSY WATER PRESERVE

Over the course of the PD&E Study, the public has raised concern regarding the potential contamination of the Grassy Waters Preserve due to an accident involving a truck carrying petroleum products or hazardous materials. The primary concern is that the 12,800 acre Preserve provides fresh drinking water to over 130,000 people in West Palm Beach and surrounding areas. Similar to any emergency management plan (mitigation, preparedness, and response), precautions have been established to moderate such an emergency and are discussed in the following sections.

Mitigation

Several design features have been identified to help protect the Grassy Waters Preserve and M-Canal. The first feature is a curb and gutter system with an urban drainage collection system. Any material spilled on the roadway would be contained by the curb and gutter. If the spill is large enough, it may enter the nearest drainage inlet where it may collect or outfall into the drainage swale. The contaminated material and soil from the swale would then be removed from the site in accordance with local, state, and federal response procedures. No direct outfall between the drainage system and the Grassy Waters Preserve is proposed.

The second feature is a guardrail located along the eastern edge of the roadway. This guardrail, in combination with the curb and gutter, would help to contain vehicles within the roadway in the event of an accident.

The third design feature includes the use of a 54 inch F Shape traffic railing (TL-5 rated) for the bridge over the M-Canal. This type of railing has been tested for impact against a loaded 18 wheel truck and is the railing with the highest performance rating available from the FDOT. According to the FDOT Structures Design Guidelines, a TL-5 rated traffic railing should be considered when a vehicle penetrating or overtopping the traffic railing would cause high risk to the public or surrounding facilities.

Preparedness

In the event of a spill involving petroleum products or hazardous materials, the Palm Beach County Comprehensive Emergency Management Plan identifies operating guidelines and procedures for a timely and effective response. The County also provides additional information under the Regional Hazardous Material Response Teams Standard Operating Guidelines. Both documents are available upon request from the County.

There are four regional hazmat response teams located within Palm Beach County. The project corridor is located in response zone 3, which is managed by the West Palm Beach Fire Department. In case of an event, initial response to a hazardous materials incident would follow standard operating protocol for first response agencies (which originates through the 911 answering point). The lead local agency is the Fire Rescue

Department, the lead state agency is the Florida Department of Environmental Protection and the lead federal agency is the US Environmental Protection Agency. The District Environmental Health and Safety Coordinator, from the Palm Beach County Emergency Operations Center, coordinates and implements the hazmat and safety program. In addition, the FDOT has an on-call contract to respond, if necessary.

Response

In case of an accident involving hazardous materials, emergency responders would contain the area to avoid further contamination and any material would be removed and cleaned from the site under the direction of appropriate agencies. Personnel involved with containment and cleanup would include those from the Fire Rescue Department, Florida Department of Environmental Protection, and the US Environmental Protection Agency. Truck and transport companies are generally required to have contractors on-call to assist with a spill cleanup. The FDOT is not involved with the response and cleanup. The FDOT is tasked with designing and maintaining safe roadways.

While all of the Build Alternatives propose guardrail, one advantage of the Preferred Alternative (a modified version of the West Alignment Alternative) is that the drainage swale would be situated along the east side of the roadway and a wider buffer between the swale and Grassy Waters Preserve would be provided.

4.16 WILD AND SCENIC RIVERS

The two wild and scenic rivers in Florida are the Northwest Fork of the Loxahatchee River and the Wekiva River. Neither of these rivers are within the boundaries of the PD&E Study although the Grassy Waters Preserve is the headwaters of the Loxahatchee River. There are no rivers in the project study area, therefore, the coordination requirement for the Wild and Scenic Rivers Act does not apply to this project.

4.17 FLOODPLAINS

A floodplain analysis was conducted to determine potential encroachment on the base floodplain, and/or action which would facilitate additional base floodplain development. The analysis is documented within the Location Hydraulics Report. Federal Emergency Management Agency (FEMA) Flood Insurance Rate Maps (FIRMs) were reviewed for the project corridor. These maps are used to locate flood insurance risk areas, administer floodplain management regulations and mitigate for floodplain impacts from development. According to Flood Insurance Rate Map's Community Panel Number 120192-0050-B October 15, 1982 map revision, the study corridor is located in Zone B which is classified as properties located between the 100 year and 500 year flood boundaries. Immediately adjacent to the study corridor to the east are areas identified as 100-year base floodplains. These areas just east of the SR 7 study area are classified as Flood Zone 'AO' and Flood Zone 'A'.

The SR 7 project alignment is proposed within the existing footprint of the County's two lane extension of SR 7 from Okeechobee Boulevard to 60th Street which does not encroach on the floodplain. The section of the proposed alignment that parallels the M-Canal is also contained in Zone B and therefore outside of the 100 year base floodplain boundary. The alignment then curves to the north over the M-Canal and continues along the west side of the existing right of way located between the Ibis Golf and Country Club and the Grassy Waters Preserve. This area is also located outside of the 100 year base floodplain boundary. There are no floodplain encroachments due to the proposed project improvements.

It has been determined, through consultation with local, state, and federal water resources and floodplain management agencies that there is no regulatory floodway involvement on the proposed project and that the project would not support base floodplain development that is incompatible with existing floodplain management programs. A floodplain concurrency meeting was held with FHWA on June 6, 2011. Minutes are included within **Appendix E**.

4.18 COASTAL ZONE CONSISTENCY

Based on a Florida State Clearinghouse Letter to the FDOT on the Advanced Notification Responses, dated August 18, 2005, the State of Florida has determined that this project is consistent with the Florida Coastal Zone Management Plan.

4.19 WILDLIFE AND HABITAT

An Endangered Species Biological Assessment (ESBA) was prepared to evaluate potential impacts to protected wildlife and vegetation associated with the proposed Build Alternatives. Throughout the course of the PD&E Study, multiple coordination meetings have been held with USFWS and other agencies. Meetings with the public and permitting agencies are summarized in **Chapter 5**. A list of the meetings held with the permitting agencies is provided within **Table 5-1**. The following is a discussion of the protected species that are known to occur in the project area.

Snail Kite

The snail kite is a medium-sized hawk listed as endangered by both USFWS and the Florida Fish and Wildlife Conservation Commission. The species is dependent on appropriate hydrology and water quality of the wetland habitats it utilizes. Snail kites inhabit relatively open, freshwater marshes that support adequate populations of Florida apple snails or exotic ramshorn apple snails, the primary food sources for the snail kite. Favorable areas consist of extensive shallow open water such as sloughs and flats, vegetated by sawgrass and spikerushes. The species is typically present along the western edge of Lake Okeechobee and in eastern portions of south Florida.

Snail kites have been previously documented over several years within natural areas located to the east of the proposed project. The USFWS Snail Kite Management

Guidelines (2006) outline Priority Management Areas for the snail kite. These areas are located to the east of the project right of way, with the closest area being approximately 4,605 feet to the east of the eastern FDOT right of way boundary. These management areas coincide with long-term nesting locations. Priority Management Areas are determined based upon the current nesting season combined with ten prior years of continual nesting data being collected for a given locality.

The USFWS conducts annual snail kite nest surveys throughout Grassy Waters Preserve. In 2010, USFWS surveys identified one nest within 530 feet from the eastern right of way line. In 2011, three snail kite nests were documented in an area of open marshes located between 162 feet and 574 feet from the eastern right of way line. The closest nest observed in 2012 and 2013 was over a mile away from the project corridor. In addition, the FDOT conducted its own snail kite surveys during the nesting season in 2012, 2013, and 2014. In 2012, the nearest snail kite observed was approximately 500 feet from the right of way. In 2013, no snail kites were observed in the project area. In 2014, the nearest snail kite observed was approximately 350 feet from the right of way. No nests were observed within or near the eastern right of way line. No nests have been documented within the FDOT right of way or within the proposed limits of construction. The FDOT commits to continue annual monitoring for snail kite during the design and construction phases of the project.

According to the current Snail Kite Management Guidelines, each time an active nest is discovered, two buffer zones are established as follows:

- No-entry Buffer Zone – This is a 500 foot radius no-entry buffer zone to protect snail kites from direct disturbance that may affect nesting success. Prohibited actions include entry of personnel, and use of airboats, helicopters, and other equipment.

- Limited Activity Buffer Zone – This is a 1,640 foot radius limited-activity buffer zone to maintain and protect foraging opportunities and habitat conditions around each nest. The goal is to maintain habitat conditions for the entire nesting period similar to those that were present when the birds selected the site.

These buffers are in effect when snail kites begin nest building through the time when breeding activity is no longer observed. Nesting season is generally from December 1st through July 31st. Snail kites do not return to a specific nest site from year to year, therefore all of the restrictions within the buffer zones are lifted once breeding activity has ceased.

The proposed project lies within both buffer zones associated with nests documented in 2010 and 2011, but well outside of the Limited Activity Buffer Zone of the nearest nests identified in 2012 and 2013. Since nest locations could change each year, a monitoring program would be conducted to ensure that construction activities are restricted or limited within identified buffer zones. The FDOT would follow standard protection measures and monitoring programs prior to and during construction.

Extensive coordination and correspondence has occurred between the FDOT and USFWS throughout the study. In a letter dated February 29, 2012, the USFWS expressed concern with potential adverse effects to foraging and nesting habitat with regard to the West, Center, and East Alignment Alternatives. These alignment options propose full use of the existing right of way resulting in 114.5 acres of wetland impact.

On August 7, 2012, the FHWA requested that USFWS initiate formal consultation for the project's potential impacts to the snail kite. On February 8, 2013, USFWS stated measures to adequately minimize the potential effects to the snail kite were not proposed and could, therefore, not yet initiate the formal consultation process. The USFWS requested (1) a demonstration and discussion of all possible efforts to reduce the impacts to wetlands from the proposed project; (2) an assessment and analysis of the potential impacts to snail kites in Grassy Waters Preserve; and (3) a complete proposal to offset any direct and indirect impacts to listed species, including preservation and maintenance of any proposed off-site compensation lands.

Through these coordination efforts with USFWS and other permitting agencies, the West Alignment Alternative was modified and identified as the Preferred Alternative to minimize impacts to wetlands and natural habitats. Under this option and similar to the West Alignment Alternative, the roadway would be located adjacent to the Ibis Golf and Country Club, and the drainage treatment swales would be located between the roadway and the western boundary of the Grassy Waters Preserve. The difference is that the median width was reduced from 42 feet to 22 feet and drainage treatment swales were re-sized to meet South Florida Water Management District standards plus capacity for 50 percent additional treatment. The combination of this minimization effort reduced the overall typical section from 320 feet wide to 150 feet wide. This leaves approximately 170 feet of right of way between the roadway and the Grassy Waters Preserve untouched; an area equal to approximately 56 acres in size. Through these efforts, the following reductions would occur:

- Approximately 54% reduction in impacts to total wetland impact acres.
- Provides for the greatest reduction in wetland impact to occur within the native-dominated higher quality marshes (approximately 87% impact reduction north of M-Canal) and hydric pine (approximately 92% impact reduction north of M-Canal).
- Reduces impact to snail kite habitat from nearly 10 acres to approximately 0.7 acres (93% reduction).
- Reduces secondary impact acreage in Grassy Waters Preserve wetlands by approximately 58% as a result of incorporating on-site mitigation (through wetland restoration, enhancement, and preservation) on the remaining 56 acres between the M-Canal and Northlake Boulevard.

In addition, the FDOT prepared a Conceptual Mitigation Plan (**Appendix I**) that outlined a detailed strategy to offset any direct and indirect impacts to the snail kite and other listed species. Key elements of this plan include a commitment to transfer ownership of

the Rangeline properties from Okeechobee Boulevard to the M-Canal and Northlake Boulevard to Jupiter Farms to Palm Beach County's Environmental Resource Management for conservation. Construction of the project will not begin until the ownership of these parcels has been transferred and are protected in perpetuity by conservation easement(s) with USFWS listed as having third party rights to enforce the easement(s) and enjoin activities that are not related to conservation. A copy of the signed conservation easement(s) will be provided to USFWS prior to construction. Construction will not begin until USFWS has acknowledged receipt of the signed conservation easement with third party rights.

In addition, an endowment fund of at least $255,617.40 for the long-term maintenance and management of the Rangeline properties will be established. The endowment fund will be placed into an account created by the Palm Beach County Board of County Commissioners that specifically mandates that the funds will be used only for activities related to maintenance and management of the donated Rangeline properties, and the account will be managed by Palm Beach County's Environmental Resources Management. A letter showing proof of the endowment fund will be provided to USFWS. Construction will not begin until USFWS has acknowledged receipt of the letter showing proof of the endowment fund.

Based on the proposed mitigation plan and minimization effort, the USFWS finds that the construction and operation of the proposed action is not likely to jeopardize the continued existence of the snail kite. The proposed project is located outside of critical habitat designated for the snail kite. This concurrence was provided through a Biological Opinion dated November 13, 2014. The Biological Opinion is provided under separate cover. A copy of all correspondence with the permitting agencies is provided within **Appendix D**. Meeting minutes are provided within **Appendix E**.

Crested Caracara

The crested caracara is listed as threatened by both USFWS and the Florida Fish and Wildlife Conservation Commission. In Florida, the caracara historically occupied native prairies, but fire suppression has caused widespread conversion of prairies to open brushland. Currently, the bulk of Florida's caracara population has been found on large cattle ranches with improved pastures and scattered cabbage palms. Dry prairies with wetter areas and scattered cabbage palm comprise typical habitat. Caracaras also occur in some improved pasturelands and even in lightly wooded areas with more limited stretches of open grassland. Within these habitats, caracaras exhibit a propensity for nesting in cabbage palms, followed by live oaks.

The northern half of the project area is located within USFWS crested caracara consultation area. However, the project area does not contain suitable nesting or foraging habitat for the crested caracara. In addition, no potential nest trees were identified in or near the project area during field surveys. Therefore, it is anticipated that the project would have *no effect* on the crested caracara.

Florida Scrub Jay

The Florida scrub jay is listed as threatened by both USFWS and the Florida Fish and Wildlife Conservation Commission due to loss of its preferred habitat. Optimal Florida scrub jay habitat consists of low growing, scattered scrub canopy species with patches of bare sandy soil such as those found in sand pine scrub, xeric oak scrub, scrubby flatwoods, and scrubby coastal strand habitats. In areas where these types of habitats are unavailable, Florida scrub jays may be found in less optimal habitats such as pine flatwoods with scattered oaks.

The entire project is located within USFWS Florida scrub jay consultation area. The consultation area for the Florida scrub jay is extensive and includes nearly all of southwest Florida. Suitable Florida scrub jay habitat was not observed during field surveys of the project area. No scrub jays were observed during field surveys. A geographic information system (GIS) database search of historic Florida scrub jay sightings did not document any scrub jay sightings within two miles of the project area. Due to lack of suitable Florida scrub jay habitat within the project area and no Florida scrub jay sightings, it is anticipated that the project would have *no effect* on the Florida scrub jay.

Red-Cockaded Woodpecker

The red-cockaded woodpecker is listed as an endangered species by USFWS and a species of special concern by the Florida Fish and Wildlife Conservation Commission. Its preferred habitat is stands of pines of at least 10 acres, between 60 to 150 years old. Old age pines have thinner sapwood and a larger heartwood diameter and have a greater chance of being affected by a fungus which results in the heartwood decaying making excavation easier for nesting and roosting cavities. Mature pine forests have been greatly reduced in Florida as a result of timbering, housing developments, and other land-clearing activities. Consequently, the red-cockaded woodpecker has been reduced to small isolated colonies.

One red-cockaded woodpecker nest location was documented by the Florida Fish and Wildlife Conservation Commission in 1991 within the Pond Cypress Natural Area. During project field surveys, neither red-cockaded woodpeckers nor suitable nest trees were observed. Due to lack of suitable habitat, it is anticipated that the project would have *no effect* on the red-cockaded woodpecker.

Wood Stork

The wood stork is listed as threatened by the USFWS. Wood storks are known to utilize freshwater marshes, swamps, lagoons, ponds, flooded fields, depressions in marshes, brackish wetlands, open pine-cypress wetlands, and man-made wetlands (i.e., ditches, canals, stormwater retention ponds).

The project corridor is located within the core foraging areas of three wood stork colonies, all of which are considered to be currently active. These highly mobile birds utilize wetlands of varying hydroperiods during different times of the year. During

general wildlife surveys, wood storks were observed foraging in wetlands within the project area. The closest wood stork colony is located approximately 2.9 miles east of the project area.

Wetlands impacted by the proposed construction may be used as foraging habitat by wood storks and other listed wading birds. For potential wetland impacts greater than five acres within the core foraging area of a wood stork colony, the US Fish Wildlife Service South Florida Ecological Service requires the calculation of wood stork prey biomass lost for impacted wetlands and also prey biomass gained for wetlands utilized as compensation. The wood stork prey biomass within the impacted footprint for the West, Center, and East Alignment Alternatives totals 181.7 kilograms. For the Preferred Alternative, it totals 136.5 kilograms. The wetlands utilized for compensation should be within the core foraging area of the affected wood stork colony and should be of similar hydroperiod. While mitigation for wetland impacts also mitigates for foraging habitat loss for wood storks and other listed wading birds, there are times when additional mitigation is needed to ensure that hydroperiods and biomass are fully replaced.

Wetland impacts to habitats potentially utilized by the wood stork will be mitigated for at the Pine Glades North Permittee Responsible Off-site Mitigation Area (PROMA). The Pine Glades North site currently has 540.4 kg of Class 6 and 7 long hydroperiod wood stork biomass credits available. Therefore, the Pine Glades site has more than enough wood stork foraging biomass credits to meet the needs of this project. In addition, the site contains many deep water features with shallow-sloped banks, which is the wood stork's preferred foraging habitat. County biologists commonly report sightings of wood storks utilizing the Pine Glades North site. Additional detailed information regarding Pine Glades North is presented within the Conceptual Mitigation Plan (**Appendix I**). Therefore at this time it has been determined that the project *may affect, but is not likely to adversely affect* the wood stork.

Extensive coordination and correspondence has occurred between the FDOT and USFWS throughout the study. In a letter dated February 29, 2012, USFWS requested a wood stork foraging analysis and information regarding the availability of mitigation opportunities to offset potential impacts to the wood stork. A calculation of the prey biomass and a table detailing all of the mitigation options was provided and included within the Conceptual Mitigation Plan and Endangered Species Biological Assessment prepared under separate cover. Based on the information and mitigation plan provided, the USFWS concurred with the affect determination of *may affect, but is not likely to adversely affect* for the wood stork. This concurrence was provided through a Biological Opinion dated November 13, 2014. The Biological Opinion is available under separate cover.

Florida Sandhill Crane

The Florida sandhill crane is listed as a threatened species by the Florida Fish and Wildlife Conservation Commission. Sandhill cranes frequently utilize pastures, prairies, and emergent wetlands. Nests are usually constructed within wetlands and either float on water or are attached to vegetation. Suitable habitat for the Florida sandhill crane

(emergent wetlands) was observed in the project corridor during field surveys. Sandhill cranes were observed flying overhead and foraging within the project area. Should construction be initiated during or just prior to the nesting season, the FDOT would commit to resurveying the impact area for nesting Florida sandhill cranes. Given the fact that no nests or young were observed, that plentiful foraging habitat surrounds the proposed impact area, and that FDOT is committed to mitigating wetland impacts and resurvey prior to construction, it is anticipated that the project *may affect, but is not likely to adversely affect* the Florida sandhill crane.

Least Tern

The least tern is listed as a threatened species by the Florida Fish and Wildlife Conservation Commission. This species typically nests on sandy beaches but artificial structures such as roof tops have been utilized as nest sites. Least terns forage in a variety of habitats including beaches, lagoons, bays, estuaries, lakes, and rivers. Least terns have been previously documented within the Pond Cypress Natural Area, but were not observed during field surveys. Since wetland impacts to habitats potentially utilized by this species would be mitigated for and suitable habitat occurs outside the project area, it is anticipated that the project would have *no effect* on the least tern.

Bald Eagle

The bald eagle is not a state or federally listed species, but is protected under the Bald and Golden Eagle Protection Act and also the Migratory Bird Treaty Act. Bald eagles utilize forested areas for roosting and nesting habitat and forage in shallow freshwater water or salt water habitats. The nearest documented eagle nest to the project boundary is located approximately 1.6 miles east of the northern terminus of the project area and was last documented as active in 2011. During field surveys, bald eagles were observed flying over; however, no additional nests were observed. Therefore, it is anticipated that this project would have *no effect* on the bald eagle.

Other Wading Birds

This category includes all wetland dependent birds that are not listed as protected by USFWS but are listed by the Florida Fish and Wildlife Conservation Commission as species of special concern. These species utilize a wide variety of wetland habitats including canals, ditches, forested wetlands, and marshes. State listed wading bird species include the limpkin, little blue heron, roseate spoonbill, snowy egret, tricolored heron and white ibis.

State listed wading bird species observed during field surveys include the limpkin, little blue heron, roseate spoonbill, tricolored heron, snowy egret, and white ibis. These species were observed in a variety of wetland habitats including channelized waterways, freshwater marshes, and shrub wetlands. Since wetland impacts to habitats potentially utilized by these state-listed species would be mitigated for, it is anticipated that the project have *no effect* on these species.

American Alligator

The American alligator is listed by USFWS as a federally threatened species based upon similarity of appearance to the endangered American crocodile and is listed by the Florida Fish and Wildlife Conservation Commission as a species of special concern. This species is known to utilize swamps, lakes, marshes, and canals. American alligators and alligator tracks were observed during field surveys. Since project impacts to wetlands within the corridor would be appropriately mitigated for, it is anticipated that the project *may affect, but is not likely to adversely affect* the American alligator.

Gopher Tortoise

The gopher tortoise is listed by the Florida Fish and Wildlife Conservation Commission as a threatened species. This species is known to utilize a variety of habitats including pine flatwoods and some rangeland communities but prefers well-drained soils that enable burrowing and support a high diversity of low-growing herbs. As development pressure has increased, gopher tortoises have been documented within residential areas. Data from the Florida Fish and Wildlife Conservation Commission indicates that gopher tortoises have been known to occur in the project area; however, no gopher tortoises, burrows, or suitable habitat for the species was documented during field surveys within the project right of way. Due to the lack of suitable habitat, and the fact that no field observations were made, the project would have *no effect* on the gopher tortoise.

Florida Pine Snake

The Florida pine snake is listed as a species of special concern by the Florida Fish and Wildlife Conservation Commission. The Florida pine snake utilizes habitats with dry sandy soil such as sand pine scrub, sandhills, pine flatwoods on well drained soils, scrubby flatwoods, pastures, and abandoned fields. This species is commonly found underground and has been documented foraging in the burrows of other species such as gopher tortoise and southeastern pocket gophers. No suitable Florida pine snake habitat exists within the project area and limited suitable habitat is located adjacent to the project area. No Florida pine snakes were observed during field surveys and no historical sightings have been documented within two miles of the project. Due to the lack of suitable habitat, the project would have *no effect* on the Florida pine snake.

Eastern Indigo Snake

The eastern indigo snake is listed as threatened by USFWS and the Florida Fish and Wildlife Conservation Commission. The species utilizes a wide variety of upland and wetland habitats. There are no previous documented sightings of eastern indigo snakes within two miles of the project area. No individuals were observed during the field surveys. Because suitable habitat for this species is available, eastern indigo snake presence in the project area is possible. The FDOT would follow standard construction precautions for the Eastern Indigo Snake. Given the large amount of nearby suitable habitat and the implementation of the standard protection guidelines during construction, it is anticipated that this project *may affect, but is not likely to adversely*

affect the eastern indigo snake. The USFWS concurred with this determination in a letter dated February 29, 2012 (provided within **Appendix D**).

Florida Mouse

The Florida mouse is listed as a species of special concern by the Florida Fish and Wildlife Conservation Commission. Habitat for the Florida mouse consists of xeric, upland vegetation found in sandy soils which are well drained. This species has been located in sand pine scrub, coastal scrub, long leaf pine and turkey oak mixed forests, upland hammocks, and dry pine flatwoods. The Florida mouse commonly utilizes gopher tortoise burrows, constructing its own burrows and nest chambers off of the burrow. No suitable Florida mouse habitat exists within the project area and limited suitable habitat is located adjacent to the project area. A GIS database search of historic Florida mouse sightings did not document any sightings within two miles of the project area and the Florida mouse was not observed during field surveys. The occurrence of this species within the project area is unlikely due to the limited suitable habitat. Therefore, the project is would have *no effect* on the Florida mouse.

State and Federal Listed Plants

A total of 41 state listed plant species have the potential to be located within the project area including 18 species listed as endangered, 19 species listed as threatened, and four species listed as commercially exploited. No protected plant species were observed within the project right of way during general field surveys. However, previous field surveys (Palm Beach County Environmental Resource Management, 1994 and 2007) identified 16 state listed plant species within the Pond Cypress Natural Area. The listed species observed include: pink pine orchid, many-flowered grasspink, cowhorn orchid, Florida butterfly orchid, pine lily, nodding club-moss, giant sword fern, cinnamon fern, royal fern, blue butterwort, snowy orchid, inflated wildpine, common wildpine, twisted air plant, giant air plant, and leather leaf air plant.

If state listed plant species are observed within the proposed impact limits during the design phase, coordination with the Florida Department of Agriculture and Consumer Services would be initiated, appropriate permits would be obtained, and efforts would be made prior to construction to allow for seed collection and/or relocation to adjacent habitat or other suitable protected lands. As a result, it is anticipated that the project would *no effect* on any state listed plant species.

A review of federally listed plants indicates that seven federally protected plants occur in Palm Beach County, but only one has the potential to occur within the project area based upon the habitat type within which it occurs: the tiny polygala. Currently, the tiny polygala is known to exist only within the Jupiter Ridge Natural Area of the County; none were observed in the project area by project biologists.

4.20 ESSENTIAL FISH HABITAT

This project is not located within, and/or would not adversely affect areas identified as Essential Fish Habitat; therefore, an Essential Fish Habitat consultation was not required. According to the ETDM Summary Report for this project (**Appendix C**), the National Oceanic and Atmospheric Administration (NOAA) National Marine Fisheries Service concluded that the proposed project would not directly impact areas that support National Oceanic and Atmospheric Administration trust resources. National Oceanic and Atmospheric Administration Fisheries has no comments or recommendations to provide pursuant to the Essential Fish Habitat requirements of the Magnuson-Stevens Fishery Conservation and Management Act (Magnuson-Stevens Act) Public Law 104-297. Further consultation on this matter is not necessary unless future modifications are proposed and the proposed action may result in adverse impacts to essential fish habitat.

4.21 FARMLANDS

No farmlands are located within the study area. It is expected that the project area which is located in the urbanized area of Palm Beach County does not meet the definition of farmland as defined in 7 CFR 658. Therefore, the provisions of the Farmland Protection Policy Act of 1984 would not apply to this project.

4.22 CONSTRUCTION

Construction activities for the project would have air, noise, vibration, water quality, traffic flow, and visual impacts for those residents and travelers within the immediate vicinity of the project.

The air quality impact would be temporary and would primarily be in the form of emissions from diesel-powered construction equipment and dust from embankment and haul road areas. Air pollution associated with the creation of airborne particles would be effectively controlled through the use of watering or the application of other controlled materials in accordance with FDOT's *Standard Specifications for Road and Bridge Construction* as directed by the FDOT Project Engineer.

Noise and vibration impacts would be from the heavy equipment movement and construction activities, such as pile driving and vibratory compaction of embankments. Noise control measures would include those contained in FDOT's *Standard Specifications for Road and Bridge Construction* in addition to those recommended in the Noise Impact section of this document. Adherence to local construction noise and/or construction vibration ordinances by the contractor would also be required where applicable. Specific noise level problems that may arise during construction of the project would be addressed by the Construction Engineer in cooperation with the appropriate Environmental Specialist.

Water quality impacts resulting from erosion and sedimentation would be controlled in accordance with FDOT's *Standard Specifications for Road and Bridge Construction* and through the use of Best Management Practices.

Maintenance of traffic and sequence of construction would be planned and scheduled so as to minimize traffic delays throughout the project. Signs would be used as appropriate to provide notice of road closures and other pertinent information to the traveling public. The local news media would be notified in advance of road closings and other construction-related activities which could excessively inconvenience the community so that motorists, residents, and business persons can make travel routes in advance. All provisions of the FDOT's *Standard Specifications for Road and Bridge Construction* would be followed.

A sign providing the name, address, and telephone of a Department contact person would be displayed on-site to assist the public in obtaining immediate answers to questions and logging complaints about project activity.

Access to all businesses and residences would be maintained to the extent practical through controlled construction scheduling.

Traffic delays would be controlled to the extent possible where many construction operations are in progress at the same time. The contractor would be required to comply with the Best Management Practices of FDOT (Commitments and Recommendations). No other locations would require temporary roads or bridges.

For the residents living along project corridor, some of the materials stored for the project may be displeasing visually; however, this is a temporary condition and should pose no substantial problem in the short term.

Construction of the roadway and bridge requires excavation of unsuitable material (muck), placement of embankments, and use of materials, such as limerock, asphaltic concrete, and Portland cement concrete. Demucking is anticipated at most of the wetland sites and would be controlled by Section 120 of the FDOT Standard Specifications. Disposal would be on-site in detention areas or offsite. The removal of structures and debris would be in accordance with local and State regulation agencies permitting this operation. The contractor is responsible for his methods of controlling pollution on haul roads, in borrow pits, other materials pits and other areas used for disposal of waste materials from the project. Temporary erosion control features as specified in the FDOT's Standard Specifications, Section 104, would consist of temporary grassing, sodding, mulching, sandbagging, slope drains, sediment basins, sediment checks, artificial coverings and berms.

Construction equipment staging areas; storage of oils, greases, and fuel; fill and roadbed material; and vehicle maintenance activities should be sited in previously disturbed areas far removed from streams, wetlands, or surface water bodies. Staging areas, along with borrow areas, should also be surveyed for listed species.

CHAPTER 5: COMMENTS AND COORDINATION

The FDOT developed and is carrying out a public involvement program as an integral part of this project. The purpose of this program is to establish and maintain communication with the public and agencies concerned with the project and its potential impacts. Since 2005, four public workshops, one formal corridor announcement meeting, one Public Hearing, and over 24 agency/local government meetings and other small group meetings have been held. These coordination meetings will continue throughout the life of the project. To ensure open communication and agency and public input, the FDOT has provided an early notification package to state and federal agencies and other interested parties defining the project and, in cursory terms, describing anticipated issues and impacts.

Finally, in an effort to resolve all issues identified, the FDOT has conducted an extensive interagency coordination and consultation effort, and public participation process. This section of the document details the FDOT's program to fully identify, address, and resolve all project-related issues identified through the public involvement program.

5.1 COORDINATION WITH AGENCIES AND LOCAL GOVERNMENTS

5.1.1 ADVANCE NOTIFICATION

Advance Notification is the means through which federal, state, and local agencies are informed of proposed actions by the FDOT. It also gives notice of the FDOT's intent to apply for federal aid on a project. This process provides for early involvement in the project development phase and allows them to share information and/or concerns for a proposed action. This process is required pursuant to Presidential Executive Order 12372 and Gubernatorial Executive Order 95-359.

On June 16, 2005, an Advance Notification package (**Appendix B**) was sent in accordance with FHWA and FDOT requirements to initiate coordination with the various agencies and local governments. The purpose of the package is to advise government agencies and elected officials that an environmental document would be prepared for the proposed project.

The Advance Notification package was distributed to federal and state agencies, and local officials, and included a project description, explanation of the need for the project, potential alternatives, and potential impacts associated with the project.

Comments were received from six agencies including: Treasure Coast Regional Planning Council, Florida Fish and Wildlife Conservation Commission, the Florida Department of Environmental Protection, South Florida Water Management District, the Village of Royal Palm Beach, and USFWS. A copy of the responses received is provided within **Appendix B**.

As a follow-up to the Advance Notification package, a Project Update Letter was distributed on July 26, 2010. The National NEPA process requires an update every four years following the original advance notification date or until the environmental document is approved for public availability. A copy of the letter is provided within **Appendix B**.

5.1.2 EFFICIENT TRANSPORTATION DECISION MAKING

The ETDM process provides FDOT, environmental agencies and the public the opportunity to participate in the early stages of transportation projects to determine potential environmental effects. This allows FDOT to identify potential issues of concern, address them earlier, refine future studies, and ensure consideration of the human, natural and physical environments. FDOT works with the FHWA, metropolitan planning organizations, 23 other federal and state agencies, and two tribal governments to review proposed transportation improvements.

The ETDM process accomplishes the streamlining objectives identified in Section 1309 of the Transportation Efficiency Act for the 21st Century and Sections 6001 and 6002 of the Safe, Accountable, Flexible, Efficient Transportation Equity Act: A Legacy for Users (SAFETEA-LU). In December 2005, FHWA grandfathered Florida's ETDM process as satisfying all of the requirements of Section 6002 of SAFETEA-LU.

Coordination with environmental resource agencies is facilitated through the Environmental Screening Tool, an internet-accessible interactive database and mapping application. The Environmental Screening Tool integrates resource and project data from multiple sources into one standard format and provides quick and standardized analyses of the potential effects of a proposed project on natural, physical, cultural, and community resources. Project information is made available to the public through the ETDM public access website.

The ETDM process creates linkages between land use, transportation and environmental resource planning initiatives through early, interactive agency involvement to improve transportation decisions and reduce the time, effort and cost to implement transportation improvements.

This project was submitted through the ETDM process on June 28, 2006, to solicit input from the permitting agencies during the corridor evaluation phase. On August 12, 2006, the comment period closed and all responses were collected. A copy of the ETDM summary report and responses is provided within **Appendix C**.

As a result, a Dispute Resolution rating was assigned by USFWS for Corridors 2 and 4 with regard to wetlands and wildlife and habitat. Assigning a category as Dispute Resolution typically signifies that the project (or in this case, the corridor) does not conform to statutory requirements. The USFWS's main concern with Corridors 2 and 4 is the resulting bifurcation of the natural areas. Corridors 2 and 4 would divide the Pond Cypress Natural Area and Grassy Waters Preserve.

To reduce the Dispute Resolution rating, a meeting was held on November 9, 2006 with Environmental Technical Advisory Team members. During this meeting, a bridge alternative was presented as an option for maintaining the connectivity between the natural areas. However, USFWS reiterated its concerns over the potential impacts and did not change the Potential Dispute rating.

5.1.3 ELECTED OFFICIALS/AGENCY KICKOFF MEETING

An Elected Officials/Agency Kickoff Meeting was held on July 26, 2005, at the Palm Beach County Engineering Building. The purpose of the meeting was to introduce the project to local, state, and federal representatives and provide a forum for soliciting comments and discussing project issues. Approximately 37 individuals attended the meeting. A copy of the meeting minutes, including a list of attendees, is provided within **Appendix E**.

5.1.4 AGENCY WORKSHOP

On Wednesday, March 29, 2006, an agency workshop was held at the South Florida Water Management District office in West Palm Beach. The purpose of the meeting was to provide an update to the permitting agencies and interested groups on the progress of the SR 7 project and to solicit their feedback and opinion of each proposed corridor, including the No-Build Alternative. Approximately 36 individuals representing federal, state, and local agencies, environmental interest groups, and local governments attended the workshop.

At the start of the workshop, the project team provided an overview of the study progress and corridor analysis. The project history and need, engineering considerations, and environmental concerns were presented to the group. Workshop participants were provided with the opportunity to ask questions at the end of the presentation.

After the question and answer session, agency representatives were divided into five groups. Each group was instructed to discuss Corridors 1, 3, 4, and the No-Build Alternative. The groups were asked not to consider Corridor 2 since the FDOT removed this option from further consideration prior to the workshop. To help facilitate the process, each group was given one large easel pad with the Alternatives listed on each pad. Each person was then given three dots and asked to place one, two, or all three dots next to the alternative of their choice. The option to place one dot on three different alternatives or three dots on one alternative was allowed. Written comments directly on the easel pads were encouraged. Each group was then asked to nominate a spokesperson and present the results of their discussion. The comments received during the presentations included the following:

- Concern over additional roadways if Corridor 4 is selected (extension of Persimmon Boulevard and 60th Street).
- Secondary impacts need to be identified.

- Concern over fragmentation of the natural area formed by the Pond Cypress Natural Area and the Grassy Waters Preserve if SR 7 is extended through Corridor 4.

- Corridor 1 results in the least amount of environmental impacts but the groups stated concern over the potential number of displaced residents.

- Corridor 3 balances all evaluation factors.

- Corridor 4 results in the most amount of environmental impacts but could be considered as a viable option if elevated.

After the group presentations, it was clear that although none of the agencies endorsed a corridor, Corridor 4 was the least favorable. A copy of the meeting minutes, including a list of attendees, is provided within **Appendix E**.

5.1.5 PALM BEACH COUNTY DELEGATION MEETING

On June 26, 2006, the Palm Beach County Legislative Delegation held a meeting at the City of Palm Beach Gardens Council Chambers for the purpose of hearing comments from the public regarding proposals made by the project team during the May 24th Corridor Alternatives Workshop. The Palm Beach County Legislative Delegation is made up of all 17 members of the Florida Senate and House of Representatives who represent Palm Beach County in Tallahassee.

At the start of the meeting, a brief overview of the project was given to those in attendance. After the opening remarks, the Delegation opened the meeting to public comments. A total of 26 people spoke. Of the 26 who spoke, 16 favored Corridor 4 and three favored the No-Build Alternative. The remaining seven speakers did not state a preference. A transcript is maintained by the Palm Beach County Legislative Delegation office.

5.1.6 PALM BEACH COUNTY BOARD OF COUNTY COMMISSIONERS WORKSHOP

On September 27, 2011, the Palm Beach County Board of County Commissioners held a joint workshop between the City of West Palm Beach, Village of Royal Palm Beach and Indian Trail Improvement District to discuss the proposed extension of SR 7. The City of West Palm Beach did not attend the workshop. During the meeting, representatives from the Village of Royal Palm Beach and Indian Trail Improvement District expressed their support for the project. A transcript is maintained by Palm Beach County.

5.1.7 AGENCY MEETINGS

Regular meetings were held with a variety of agencies including the South Florida Water Management District, USFWS, USACE, City of West Palm Beach, and Palm Beach County staff. **Table 5-1** lists the meetings held with each agency. Meeting minutes are provided within **Appendix E**.

Table 5-1: List of Agency Meetings

Date	Subject	Location
June 21, 2006	Coordination Meeting with the City of West Palm Beach Staff	City of West Palm Beach Office
July 10, 2006	US Army Corps of Engineers Coordination Meeting	US Army Corps of Engineers Palm Beach Gardens Regulatory Office
July 19, 2006	South Florida Water Management District Coordination Meeting	South Florida Water Management District
November 9, 2006	ETDM Coordination Meeting	Palm Beach MPO Office
October 17, 2007	Coordination Meeting with the Palm Beach County Engineering Department	Palm Beach County Office
September 25, 2008	Coordination Meeting with the Palm Beach County Engineering Department	Palm Beach County Office
May 4, 2009	Coordination Meeting with the Northern Palm Beach County Improvement District	Northern Palm Beach County Improvement District Office
April 26, 2010	Presentation to the City of West Palm Beach City Commission	City of West Palm Beach City Hall
September 15, 2010	Pond Siting Meeting	FDOT – D4 Headquarters
October 7, 2010	Meeting with West Palm Beach Engineering Services Department	City of West Palm Beach Office
January 26, 2011	Multi-Agency Coordination Meeting	City of West Palm Beach Watershed Management Office
March 2, 2011	Coordination Meeting with the City of West Palm Beach	City of West Palm Beach Watershed Management Office
April 6, 2011	South Florida Water Management District Coordination Meeting	South Florida Water Management District
June 6, 2011	FHWA Floodplain Concurrency Meeting	FDOT – D4 Headquarters
September 6, 2011	Multi-Agency Coordination Meeting	South Florida Water Management District
October 26, 2011	South Florida Water Management District Coordination Meeting	South Florida Water Management District
October 28, 2011	US Fish and Wildlife Service Coordination Meeting	US Fish and Wildlife Service Office

April 19, 2012	US Fish and Wildlife Service Coordination Meeting	US Fish and Wildlife Service Office
August 22, 2012	Coordination meeting with Palm Beach County Staff	Palm Beach County Office
September 11, 2012	Multi-Agency Coordination Meeting	South Florida Water Management District
June 6, 2013	Multi-Agency Coordination Meeting	US Fish and Wildlife Service Office
July 23, 2013	US Fish and Wildlife Service Coordination Meeting	US Fish and Wildlife Service Office
August 13, 2013	US Army Corps of Engineers Coordination Meeting	US Army Corps of Engineers Palm Beach Gardens Regulatory Office
January 14, 2014	US Fish and Wildlife Service Coordination Meeting	US Fish and Wildlife Service Office
November 25, 2014	US Army Corps of Engineers Coordination Meeting	Conference Call

5.2 COMMUNITY OUTREACH

Five public workshops/meetings were held during this study. In addition, the project team participated in several meetings organized by interested community groups. At the beginning of the study, support for the project was mixed. Residents within the Acreage (represented by the Indian Trail Improvement District) and the Rustic Lakes community were in support of Corridor 4. Residents from the Ibis Golf and Country Club were in favor of the No-Build Alternative. Corridor 3 and the No-Build Alternative were ultimately selected for advancement through the Public Hearing as a compromise between the public and permitting agencies. Since then, residents from the Acreage have expressed their support for the project and Corridor 3 while Ibis continues to support the No-Build. Although the Ibis community is opposed to the project, the FDOT has maintained a working relationship with the community. Various meetings and presentations have been held and productive feedback from Ibis has been received such as the preference for a roundabout at their entrance.

5.2.1 PUBLIC KICKOFF MEETING

A Public Kickoff Meeting was held on September 27, 2005, at the Royal Palm Beach Community High School. The meeting followed an informal, open house format and provided an opportunity for the public to acquaint themselves and comment on the project. Approximately 116 individuals attended the meeting. Throughout the evening, project information was available for informal review, and members of the project team were available to hold one-on-one conversations and to respond to individual questions. Display boards were available including three area-wide project boards, one

environmental lands board and one project schedule. Comment sheets and a "Drawing Map" were provided for participants to submit their comments and ideas.

Reaction from participants was mixed; however, the majority preferred Corridor 4 instead of utilizing the County's extension of SR 7. Those in favor of Corridor 4 preferred to have an alignment furthest away from the Acreage neighborhood. Some expressed concern over the risk of truck accidents causing hazardous material spills adjacent to the City of West Palm Beach's Grassy Waters Preserve. Ibis residents were concerned about the expected traffic growth along Northlake Boulevard and how it would affect the entrance in and out of the community. Several questions were received as to the number of signalized intersections that would surround the Ibis community.

A court reporter was made available during the meeting and comment forms were distributed for feedback. A copy of the notification materials, display boards, and comments received is retained within the project file and available upon request.

5.2.2 CORRIDOR ALTERNATIVES WORKSHOP

A Corridor Alternatives Workshop was held on Wednesday, May 24, 2006 at the Village of Royal Palm Beach Cultural Center. During the meeting, a presentation was made to inform participants of the study history, progress, and evaluation process.

Approximately 490 individuals attended the meeting. Members of the project team were available to hold one-on-one conversations and respond to individual questions. During these conversations, some participants commented that the extension has always been proposed along Corridor 4 and should stay that way. They expressed that Corridor 1 would be too disruptive, specifically saying that "we moved out here for the tranquility and now you are going to put a 6-lane roadway in our backyard." Others questioned the current project termination point at Northlake Boulevard and how ineffective the roadway would be as a hurricane evacuation route. These individuals felt that the project should continue up to SR 710. Concerning Corridor 3, several comments were received about the number of curves and the resulting unsafe condition.

Comment sheets and a "Corridor Ranking Form" were distributed for all participants to state their preference. Approximately 688 corridor ranking forms were received during and after the workshop. Each person who filled out the form was asked to rank the corridors and No-Build Alternative in order of preference. Corridor 2 was not listed as an option as it was eliminated from further consideration prior to the meeting. The feedback collected from these forms was used to gauge the public's preference for the corridors under consideration. **Table 5-2** summarizes the ranking results received from the public for each corridor and No-Build Alternative.

Table 5-2: Public Corridor Ranking Results

Ranking	No-Build	Corridor 1	Corridor 3	Corridor 4
First Place	266	15	11	405
Second Place	151	46	183	168
Third Place	97	38	279	44
Fourth Place	65	442	76	38

A court reporter was made available for those wishing to make verbal statements. A copy of the notification materials, display boards, completed corridor ranking forms, and comments received is retained within the project file and available upon request.

5.2.3 CORRIDOR ANNOUNCEMENT MEETING

A Corridor Announcement Meeting was held on Tuesday, June 5, 2007, at the Hilton Hotel in West Palm Beach. During the meeting, a voiced-over presentation was provided to inform participants of the recommendation to continue with Corridor 3 and the No-Build Alternative through the remainder of the PD&E Study. After the presentation, meeting participants were provided with the opportunity to make a public statement or to submit written comments. A court report was made available at all times for those wishing to make verbal statements.

Approximately 110 individuals attended this meeting. Prior to the presentation, members of the project team were available to hold one-on-one conversations and respond to individual questions. After the presentation, 20 individuals made public statements. Some expressed their urgency for construction to begin and said that they think the "SR 7 extension is absolutely necessary and long overdue considering the unparalleled growth in the western community." Others, however, expressed their concern for the amount of noise and air pollution that may be created by this project as well as the potential for traffic to increase on Northlake Boulevard.

Statements from local government representatives were also received. Ms. Michelle Damone, President of the Indian Trail improvement District (ITID), stated that the ITID supports Corridor 3 and that "it's important to our community that this road is built in its entirety all the way to Northlake Boulevard and connect to the existing SR 7 that is on the side of the Publix Ibis shopping center..." Mr. Alex Hansen, a planner from the City of West Palm Beach, expressed to the audience the City's concern for how the Water Catchment Area may be impacted by this project. The Water Catchment Area is the primary source of drinking water for the City of West Palm Beach and other municipalities.

In addition to verbal statements, 44 written comments were received during the meeting and by mail. These comments essentially echoed both the support as well as the concern received verbally that evening. A copy of the voiced-over presentation,

handouts, display boards, and comments received is retained in the project file and available upon request.

5.2.4 ALTERNATIVES WORKSHOP 1

An Alternatives Workshop was held on April 16, 2008, at the Royal Palm Beach Cultural Center. The meeting followed an informal, open house format where participants were provided with the opportunity to review and comment on the preliminary alternatives and traffic data. Approximately 135 individuals attended the workshop. Members of the project team were available throughout the workshop to hold one-on-one conversations and to respond to individual questions. Display boards were available including a proposed alternatives board and preliminary traffic projections board.

A court reporter was made available during the meeting and comment forms were distributed for feedback. A copy of the notification materials, display boards, and comments received is retained within the project file and available upon request.

5.2.5 ALTERNATIVES WORKSHOP 2

A second Alternatives Workshop was held on May 5, 2010, at the Royal Palm Beach Cultural Center. The meeting followed an informal, open house format where participants were provided with the opportunity to review and comment on the preliminary alternatives and traffic data. Approximately 170 individuals attended the workshop. Members of the project team were available throughout the workshop to hold "one on one" conversations and to respond to individual questions.

A court reporter was made available during the meeting and comment forms were distributed for feedback. A copy of the notification materials, display boards, and comments received is retained within the project file and available upon request.

5.2.6 COMMUNITY ASSOCIATION AND GROUP MEETINGS

Several meetings were held with the Ibis Golf and Country Club at the request of Ibis representatives. The Ibis community is generally concerned with the potential increase of traffic on Northlake Boulevard, the potential for a hazardous materials spill into the Grassy Waters Preserve, and noise impacts. A list of the presentations and meetings held with the Ibis community is provided in **Table 5-3**. Minutes from the two meetings are provided within **Appendix E**.

Table 5-3: List of Community and Group Meetings

Date and Time	Subject	Location
June 21, 2007	Presentation to the Ibis Golf and Country Club	Ibis Golf and Country Club
December 10, 2008	Meeting with Representatives from the Ibis Golf and Country Club	FDOT District Four Headquarters
June 4, 2009	Meeting with Representatives from the Ibis Golf and Country Club	FDOT District Four Headquarters
January 13, 2011	Presentation to the Ibis Golf and Country Club	Ibis Golf and Country Club

5.2.7 PUBLIC HEARING

A formal Public Hearing was held on Wednesday, March 21, 2012 at 5:30 PM at the South Florida Expo Center, located at 9067 Southern Boulevard, West Palm Beach, Florida 33411. The Public Hearing was held to give the public the opportunity to express their views regarding specific location, design, socioeconomic effects, and environmental impacts associated with the viable alternatives. Richard Young, P.E., Florida Department of Transportation District Four Project Development Engineer, moderated over the Hearing.

Several different techniques were used to notify citizens about the Hearing. Approximately 2,915 individuals (including 86 elected and agency officials) received a letter inviting them to attend the Hearing. In addition, an advertisement was placed in the Florida Administrative Weekly on February 24, 2012 and display advertisements appeared in the *Palm Beach Post* on February 26, and March 11, 2012.

Seven hundred fifty-nine people attended the Hearing. FDOT and its consultants were present at the meeting site prior to the formal proceedings to informally discuss the project with the general public. Various stations with display boards were setup and made available for viewing. One station provided an illustration of the alternatives considered depicted over aerial photographs. Others discussed noise, wetlands, wildlife, and Section 4(f) impacts. Another station discussed contamination avoidance of the Grassy Waters Preserve and a member of the Palm Beach County hazmat response team was available to discuss the County's response procedures for hazardous material spills. Informational handouts and comment forms were also offered to attendees. The informal, "open house" portion of the Hearing began at 5:30 PM and concluded at approximately 6:30 PM.

Immediately following the informal session, the formal portion of the Public Hearing began. After brief introductory remarks, a PowerPoint presentation of the project and the resulting analyses was shown. This presentation included a summary of the need for the facility, and the advantages and disadvantages of the viable alternatives, as well as the No-Build Alternative. Socio-economic and environmental impacts were also presented. The next portion of the Public Hearing was devoted to a public comment period. Sixty-one individuals spoke for the public record at the Hearing. Of the 61 public statements made, 33 were supportive of the project, 18 were opposed, and 10 were neutral or did not express a view. The Public Hearing concluded at approximately 9:08 PM.

For those not wanting to make a public statement at the microphone, two other options were made available. One option was to provide a written comment. The other was to sit down with a court reporter and make a statement. Two court reporters were present at the Hearing to obtain comments before, during, and after the public hearing presentation. The comments documented by the two court reporters were generally supportive of the SR 7 Extension (23 comments expressing approval of the project, 10 expressing disapproval of the project), as documented in **Table 5-4.**

Table 5-4: Oral and Written Comments Received at SR 7 Extension Public Hearing

	Views Expressed			
Type of Comment Received	Support SR 7 Extension	Oppose SR 7 Extension	Informational views/ neutral position to the SR 7 Extension	Total
Oral Comments Received by Court Reporter	23	10	20	53
Oral Public Testimony Period (documented by Court Reporter)	33	18	10	61
Written comments received before, during and after the Hearing	2,888*	1,841*	23*	4,752*
*Total	2,944*	1,869*	53*	4,866*

**While great efforts were made to remove duplicates from the count of the written comment submissions, there may be a few duplicates because 1) submissions included anonymous entries and 2) names that were not entirely identical were not removed*

FDOT received 5,093 written comments before, during, and (for the two weeks) after the Public Hearing. Of the written comments received during this period, 2,888 people approve of the project, and 1,841 people oppose the project. Including both the oral and written comments received before, during, and after the Public Hearing, 2,944 people approve of the project and 1,869 people oppose the project.

In general, 61% of the comments and statements showed support for the project and demonstrates that most in the community have a desire for improved access and system linkage. Other reasons showing support include safety, hurricane evacuation, and relieving traffic within the Acreage and Village of Royal Palm Beach. Palm Beach County, Village of Royal Palm Beach, Indian Trails Improvement District (representing the Acreage community), Western Communities Council, and the Central Palm Beach County Chamber of Commerce are all on record for supporting the project. The City of West Palm Beach and the Ibis Golf and Country Club do not support the project. Those in opposition cited concern for the drinking water supply, environmental issues (wildlife and habitat), project cost, and lack of project need.

During the Public Hearing, a letter was submitted on behalf of the City of West Palm Beach from the law office of Tew Cardenes, along with supporting documentation, citing their comments and objections to the project. The supporting documents provided by Tew Cardenes are included in the project record and comment on a variety of issues such as traffic need, proposed drainage approach, noise impacts, and impacts to listed species, wetlands, water quality, and cultural resources. In addition, the letter raised concerns about potential impacts to the Grassy Waters Preserve, adverse effects to the snail kite, lack of a mitigation plan, and the likelihood of a contamination spill into the Grassy Waters Preserve.

In a document prepared by JMD Engineering and titled *Comparison of No-Build and Build Scenarios*, the analysis indicated that all roads within and adjacent to the study area have shown a decrease in traffic in the last five years, therefore, travel demands are no longer a valid reason for the project. In response, the PD&E traffic documents prepared as part of this Environmental Assessment evaluated the area-wide needs up to the year 2040. Although traffic volumes did decrease over the last few years, population and traffic volumes may fluctuate over the short term. Long term trends still indicate additional growth in the region.

Concerns about the drainage approach were summarized in a report by Higgins Engineering, specifically about the proposed discharge of runoff into the lake system within Ibis community. In response, part of the South Florida Water Management District permit for the development of the Ibis community factored in the runoff from the future extension of SR 7. As the project moves into design, further refinement will occur to the proposed drainage system and appropriate coordination will take place with the South Florida Water Management District and the Northern Palm Beach County Improvement District.

The City of West Palm Beach Planning Department prepared a memo with their comments on the Cultural Resource Assessment Survey (CRAS). In this memo, the City made the comment that the CRAS is flawed and incomplete. The CRAS was prepared

using methods in accordance with the PD&E Manual. The Florida State Historic Preservation Officer determined that the report was complete and concurred with the findings on July 29, 2011.

Excessive noise impacts were also cited in the Tew Cardenes letter and summarized in a report prepared by Siebein Associates. In this report, concerns were raised that noise impacts to the Grassy Waters Preserve were not considered. In response, Title 23 CFR 772.11(a) states that noise "abatement will usually be necessary where frequent human use occurs and a lowered noise level would be of benefit." Regarding the suggestion that a noise wall is needed to protect the Preserve, the preserve areas do not qualify since they do not encounter "frequent human use." The nearest point of activity from the project corridor is located approximately 1.5 miles away. This is the distance between the project right of way and the nature center/boardwalk within the Grassy Waters Preserve.

In response to concerns raised about wetland and wildlife impacts (as made by the City of West Palm Beach and other permitting agencies), modifications were made to the typical section for the segment between 60th Street and Northlake Boulevard. The median width was reduced from 42 feet to 22 feet, and the drainage treatment swales were re-sized to meet South Florida Water Management District standards plus capacity for 50 percent additional treatment. The combination of this minimization effort reduced the overall typical section from 320 feet wide to 150 feet wide. This leaves approximately 170 feet of right of way between the roadway and the Grassy Waters Preserve untouched; an area equal to approximately 56 acres in size. Impacts to higher quality wetlands would be reduced by 90 percent and impacts to existing snail kite habitat would be reduced by 93 percent.

Regarding the potential contamination of the Grassy Waters Preserve due to an accident involving a truck carrying petroleum products or hazardous materials, several design features are proposed. The first feature is a curb and gutter system with an urban drainage collection system. Any material spilled on the roadway would be contained by the curb and gutter. If the spill is large enough, it may enter the nearest drainage inlet where it may collect or outfall into the drainage swale. The contaminated material and soil from the swale would then be removed from the site in accordance with local, state, and federal response procedures. It is important to note that no direct outfall between the drainage system and the Grassy Waters Preserve is proposed.

The second feature is a guardrail located along the eastern edge of the roadway. This guardrail, in combination with the curb and gutter, would help to contain vehicles within the roadway in the event of an accident. The third design feature includes the use of a 54-inch barrier wall for the bridge over the M-Canal to help retain any vehicles on the bridge.

The City's concern about an insufficient mitigation plan has since been addressed through further coordination with the permitting agencies and the development of a Conceptual Mitigation Plan provided within **Appendix I**. The plan includes the enhancement, restoration, and preservation of the remaining Rangeline right of way adjacent to the Grassy Waters Preserve (56 acres), along with off-site mitigation via the

Pine Glades North Permittee Responsible Offsite Mitigation Area (PROMA). Further, the FDOT commits to donating all of the remaining Rangeline properties, including north of Okeechobee Boulevard to the M-Canal, Northlake Boulevard to SR 710, and SR 710 to Jupiter Farms, for conservation and mitigation needs. The total area that would be donated and placed under conservation is approximately 216 acres in size. A response letter was provided to the City of West Palm Beach on November 20, 2014. A copy of this letter is located within **Appendix D**.

Other comments were later received from the City of West Palm Beach and USACE to evaluate additional corridors to the west. In response, the FDOT conducted an evaluation of five alternative alignments within two corridors; three alternative alignments along 130th Avenue North and two alternative alignments along 140th Avenue North. The results of this study are documented within a *Corridor Report Addendum,* prepared under separate cover, and conclude that these corridors would result in significant impacts involving numerous property and residential impacts. None of the five corridors are acceptable alternatives to Corridor 3.

A copy of all Public Hearing related materials is available under separate cover. This includes a certified transcript of the Hearing, sign-in sheets, notifications, comments received (including the letter and documents from the City of West Palm Beach), a copy of the project fact sheet, copies of the display boards, and a printout of the PowerPoint presentation.

5.2.8 PROJECT NEWSLETTERS

Four newsletters have been published to-date and mailed to all project stakeholders including property owners within the project area. Each newsletter provided a status update of the study efforts. Copies of each newsletter are retained in the project file and available upon request.

5.2.9 PROJECT WEBSITE

A project website has been maintained since the start of the study at www.sr7extension.com. The website has provided the community with the latest project information, proposed alternatives, schedule, and meeting announcements.

CHAPTER 6: COMMITMENTS AND RECOMMENDATIONS

6.1 COMMITMENTS

In order to minimize the impacts of this project on the human environment, the FDOT is committed to the following measures:

- Construction of the project will not begin until the ownership of the parcels of land known as the "Rangeline Corridor from Okeechobee Boulevard to the M-Canal," Rangeline Corridor from Northlake Boulevard to SR 710," and "Rangeline Corridor from SR 710 to Jupiter Farms" has been transferred to Palm Beach County's Environmental Resource Management and are protected in perpetuity by conservation easement(s) with USFWS listed on the easement(s) as having third party rights to enforce the easement(s) and enjoin activities that are not related to conservation. A copy of the signed conservation easement(s) will be provided to USFWS prior to construction. Construction will not begin until USFWS has acknowledged receipt of the signed conservation easement with third party rights.

- A non-wasting endowment fund of at least $255,617.40 for the long-term maintenance and management of the three "Rangeline Corridors" will be established. The endowment fund will be placed into an account created by the Palm Beach County Board of County Commissioners that specifically mandates that the funds will be used only for activities related to maintenance and management of the three Rangeline Corridors, and the account will be managed by Palm Beach County's Environmental Resources Management. A letter showing proof of the endowment fund will be provided to USFWS. Construction will not begin until USFWS has acknowledged receipt of the letter showing proof of the endowment fund.

- Appropriate measures will be taken during construction to avoid contact with any listed species. In the event of locating a dead, injured, or sick threatened or endangered species, initial notification will be made to the nearest USFWS Law Enforcement Office in Vero Beach and secondary notification will be made to the Florida Fish and Wildlife Conservation Center in West Palm Beach.

- Care will be taken in handling sick or injured specimens (of any federally listed species) to ensure effective treatment and care or in the handling of dead specimens to preserve biological material in the best possible state for later analysis as to the cause of death. In the event of locating an injured or sick specimen, initial notification will be made to the USFWS Law Enforcement Office in Vero Beach and secondary notification will be made to the Florida Fish and Wildlife Conservation Center in West Palm Beach. In conjunction with the care of sick or injured individuals, or preservation of biological materials from a dead animal, the finder has the responsibility to carry out instructions provided by Law

Enforcement to ensure that evidence intrinsic to the specimen is not unnecessarily disturbed.

- Suitable mitigation to offset both direct and secondary wetland impacts will occur. This includes the restoration, enhancement, and preservation of the un-used right of way between the M-Canal and Northlake Boulevard.

- All stormwater outfalls will be directed to the west to existing stormwater systems rather than to the wetlands located within Pond Cypress Natural Area or Grassy Waters Preserve.

- The standard FDOT Construction Precautions for the Eastern Indigo Snake will be adhered to during construction of the project.

- In order to protect the snail kite and its foraging habitat during the construction phase, the FDOT will commit to the following actions:

    1. Exotic plant species removal during construction within any native snail kite habitat remaining within the project ROW;

    2. Implementation of a project-specific Snail Kite Management Plan prior to and during construction. The management plan includes monitoring of nesting activity, guidance for construction scheduling, and contractor education;

    3. Annual snail kite nesting season surveys prior to, and during construction;

    4. Coordination with USFWS regarding the results of the surveys, and application of the buffers with regard to construction activities as appropriate;

    5. Weekly nest monitoring at any time the buffers have been employed; and

    6. Compilation of a final report, detailing all activities undertaken related to protection of the snail kite during construction, and as prescribed within the project-specific Snail Kite Management Plan.

- Concerning the wood stork, the FDOT has estimated the total prey biomass that will be lost as a result of the project, and ample mitigation opportunities have been identified to offset this impact. The FDOT will coordinate with USFWS regarding the details of the mitigation plan at the time of the project permitting.

- Florida sandhill cranes have been observed foraging in the project area, therefore, the impact area will be surveyed for sandhill crane nests prior to construction if within nesting season (January through June). If sandhill crane nests are located, the FDOT will coordinate with FWC as appropriate.

- Should project construction begin just prior to or during the Bald Eagle nesting season (October 1 through March 15), the FDOT will commit to conducting a pre-construction nest survey in appropriate habitat that is located within and up to 660 feet from the project limits. Should an active nest be located, the FDOT

will coordinate with USFWS, and conduct monitoring activities, if required, in accordance with the 2007 USFWS Bald Eagle Nest Monitoring Guidelines.

- An environmental scientist as part of the FDOT Construction Engineering and Inspection (CEI) team will be employed to monitor nesting activity of protected bird species.

- Restored wetlands within the 56 acres of unused right of way between the M-Canal and Northlake Boulevard will be monitored for usage by listed species. A monitoring plan will be submitted to the SFWMD, USACOE, and USFWS.

- The FDOT will commit to conducting a pre-construction survey for the gopher tortoise and then completing any permitting and relocation activities as appropriate.

- The construction plans will include wildlife fencing along the east and south sides of the corridor and wildlife crossings that will allow for the safe passage between the Ibis Mitigation Area and Grassy Waters Preserve.

- If roadway lighting is warranted, FDOT will provide a lighting system that reduces light trespass onto adjacent properties to the greatest extent possible.

- The Florida Department of Transportation is committed to the construction of feasible and reasonable noise abatement measures contingent upon the following conditions:

  1. Detailed noise analyses during the final design process supports the need, feasibility and reasonableness of providing abatement;

  2. Cost analysis indicates that the cost of the noise barrier(s) will not exceed the cost reasonable criterion;

  3. Community input supporting types, heights, and locations of the noise barrier(s) is provided to the District Office; and

  4. Safety and engineering aspects as related to the roadway user and the adjacent property owner have been reviewed and any conflicts or issues resolved.

- A roundabout will be provided at the intersections of 60th Street and the east entrance of the Ibis Golf and Country Club.

- Coordination will continue during the design and construction phases of this project with the public in general, state and federal permitting agencies, and adjacent cities and local jurisdictions who have expressed interest in this project such as Palm Beach County, City of West Palm Beach, Village of Royal Palm Beach, and the Indian Trail Improvement District to address any other issues that may arise.

6.2 RECOMMENDATIONS

As a result of the environmental studies, interagency coordination, and comments received during the Public Hearing, the Preferred Alternative for Location and Design Concept Acceptance (LDCA) is the widening of the existing County roadway from two to four lanes between Okeechobee Boulevard and 60th Street, construction of a four lane divided facility between 60th Street and the east entrance of the Ibis Golf and Country Club using the West Alignment Alternative, and the widening of the existing County roadway from two to four lanes between the east entrance of the Ibis Golf and Country Club and Northlake Boulevard using the West Alignment Alternative.

Under this recommendation, the roadway would be located adjacent to the Ibis Golf and Country Club, and the drainage treatment swales would be located between the roadway and the western boundary of the Grassy Waters Preserve. The modified version of the West Alignment Alternative was selected to minimize impacts to wetlands and natural habitats.

The typical section includes four, 12 foot wide lanes separated by a raised median. A four foot wide bicycle lane and six foot wide sidewalk is proposed along each side. After the Public Hearing and through coordination with the permitting agencies, modifications were made to the typical section for the segment between 60th Street and Northlake Boulevard (Segment 2). The median width was reduced from 42 feet to 22 feet, and the drainage treatment swales were re-sized to meet South Florida Water Management District standards plus capacity for 50 percent additional treatment. The combination of this minimization effort reduced the overall typical section from 320 feet wide to 150 feet wide. This leaves approximately 170 feet of right of way between the roadway and the Grassy Waters Preserve untouched; an area equal to approximately 56 acres in size. Impacts to higher quality wetlands adjacent to the Grassy Waters Preserve would be reduced by 90 percent and impacts to existing snail kite habitat would be reduced by 93 percent. Typical sections for the Preferred Alternative are provided within **Appendix J**.

A modified version of the crossing over the M-Canal is recommended that reduces the amount of encroachment into the Pond Cypress Natural Area. The design speed for the curve across the bridge was reduced from 45 MPH to 40 MPH. This results in 1.23 acres of encroachment as opposed to 7.3 acres for the straight bridge crossing. This option also avoids the portion of the M-Canal owned by the City of West Palm Beach. The section of the M-Canal owned by the City of West Palm Beach is protected under a Special Act by the Florida Legislature (Chapter 67-2169). The design speed for the segments north and south of the M-Canal crossing would remain at 45 MPH.

The Preferred Alternative includes the at-grade intersection option for the intersection at Okeechobee Boulevard. The findings of the traffic study indicate that the intersection will reach capacity by 2030 regardless if the extension is constructed or not. This implies that the performance at the intersection is not directly related to the proposed extension, but rather due to heavy demands along Okeechobee Boulevard. A grade separated interchange would result in additional impacts to the surrounding community and should be studied as a separate project. A grade separated

interchange at SR 7 and Okeechobee Boulevard is already identified by the Palm Beach MPO in its Long Range Transportation Plan (LRTP). A roundabout is recommended for the intersections at 60th Street and the entrance to the Ibis Golf and Country Club. The Ibis Golf and Country Club passed a resolution on December 11, 2009 in favor of the roundabout option if the project was approved.