MW2F
S0074

NATIONAL SURVEY OF SOLID WASTES FROM MINERAL PROCESSING FACILITIES

ROUTING SHEET 00157

JAN 12 1990

CER ID # PA9.45

FACILITY NAME Agrico Chemical Co. - Uncle Sam Plant

CITY Uncle Sam STATE LA

	MONTH	DAY	
Questionnaire received by RTI	April	25	
Manual edit began	May	9	"B" QC 5-15-89 Failed Edit JonB 5/10/89
Manual edit completed	May	31	✓ CDR
SB Data entry began	June	1	Jan in/out
Data entry completed	June	23	SB

RTI ID: 101618

NOTICE: If the film image is less clear than this notice, it is due to the quality of the document being filmed

MW2F 006

0055 F

NOTICE: If the film image is less clear than this notice, it is due to the quality of the document being filmed

OMB # 2050-0098
Expires: 12/89

U.S. ENVIRONMENTAL PROTECTION AGENCY

National Survey of Solid Wastes from Mineral Processing Facilities

QUESTIONNAIRE

NOTICE OF ESTIMATED BURDEN

EPA estimates that completing this questionnaire will take 40-80 hours per facility, depending on the size and complexity of mineral processing operations. This estimate includes time for reading the instructions and assembling the requested information. Send any comments on this estimate or suggestions for reducing this burden to: Robert W. Hall, Office of Solid Waste (MD OS-323), U.S. Environmental Protection Agency, 401 M Street, S.W., Washington, DC 20460; and to: Office of Information and Regulatory Affairs, Office of Management and Budget, Washington, DC 20503.

MW2F 006

005b

BEFORE PROCEEDING WITH THIS QUESTIONNAIRE,
read the *Instructions and Definitions* booklet carefully.

This questionnaire is designed to obtain information on the generation and management of selected solid wastes from mineral processing facilities. EPA is studying these wastes, which are called SPECIAL WASTES in this questionnaire, for a report to Congress. Six months after submitting this report to Congress, EPA will determine whether these SPECIAL WASTES should be subject to the requirements of Subtitle C of the Resource Conservation and Recovery Act of 1976 (as amended).

The questionnaire is divided into 9 sections. The subject of each questionnaire section is:

Section 1 — General information on the entire facility.

Section 2 — Special wastes and the processing units that GENERATE them.

Section 3 — Processing units that RECEIVE a special waste (or its residue).

Section 4 — Wastewater treatment plants that RECEIVE a special waste (or its residue).

Section 5 — Surface impoundments (including tailings ponds and lagoons) that RECEIVE a special waste (or its residue).

Section 6 — Other waste management units that RECEIVE a special waste (or its residue).

Section 7 — Environmental monitoring near waste management units that RECEIVE a special waste (or its residue).

Section 8 — General information on waste management units not covered in Sections 5 and 6.

Section 9 — Contact person at the facility in case follow-up information is needed and instructions on returning the completed questionnaire.

Some of these questionnaire sections may not be relevant for your facility. Furthermore, parts of some sections may not be relevant to your facility. Specific instructions will skip you over irrelevant sections/parts of the questionnaire. Finally, this questionnaire uses many technical terms, some of which have special meanings for the purposes of this questionnaire. Definitions for all technical terms are provided in the *Instructions and Definitions* booklet.

NOTICE: If the film image is less clear than this notice, it is due to the quality of the document being filmed

MW2F 006

0057

NOTICE: If the film image is less clear than this notice, it is due to the quality of the document being filmed

SECTION 1

GENERAL FACILITY INFORMATION

This section asks for information on the entire facility. For the purposes of this questionnaire, a facility includes all mining, leaching, beneficiating, processing, fabricating/manufacturing, and waste management units within property boundaries that are controlled by one operating company.

1.1 What are the name and address of this facility?

Facility name: AGRICO CHEMICAL CO. - Uncle Sam Plant

Street Address *: HIGHWAY 44 RIVER ROAD

City: Uncle Sam State: LA Zip: 70792

*[*Do not give a P.O. Box number. If there is no street address where the mineral processing facility is located, identify the facility location by noting the city (or town or village) and state in which it is located and by providing a complete narrative description of where the facility is located (e.g., on Route 28, two miles north of the intersection of Routes 28 and 255, directly adjacent to the Park Brothers construction works) in the FACILITY NOTES section.]*

1.2 Does this facility generate, treat, store, or dispose of hazardous waste according to federal or state law?

(Circle one number.)

(01) Yes *(CONTINUE TO NEXT QUESTION)*
02 No *(SKIP TO QUESTION 1.4 ON NEXT PAGE)*

1.3 Does this facility have an EPA hazardous waste generation or facility identification number?

(Circle one number.)

(01) Yes ----------> a. **EPA I.D. #** LAD 059575756
b. **EPA I.D. #** _____
c. **EPA I.D. #** _____
d. **EPA I.D. #** _____
e. **EPA I.D. #** _____
f. **EPA I.D. #** _____

02 No

MW2F 006
0058

1.4 Which of the following SPECIAL WASTES did this facility generate in calendar years 1984 through 1989?

(For each special waste generated by this facility, circle all numbers that apply.)

Commodity	Special Waste	Calendar Year 1984-87	1988	1989	For EPA Use
Alumina	Pisolites	01	02	03	a
	Red or brown refining muds	01	02	03	b
Beryllium	Barren filtrate	01	02	03	c
	Bertrandite thickener slurry	01	02	03	d
	Beryl plant discard	01	02	03	e
	Processing raffinate	01	02	03	f
	Sludge leaching slurry	01	02	03	g
Cerium	Process water	01	02	03	h
Primary Chromite	Roast/leach ore residue	01	02	03	i
Coal Gas	Ash	01	02	03	j
	Cooling tower blowdown	01	02	03	k
	Process wastewater	01	02	03	l
Primary Copper	Acid plant blowdown	01	02	03	m
	Bleed electrolyte	01	02	03	n
	Process wastewater	01	02	03	o
	Roast/leach acid plant residue	01	02	03	p
	Slag	01	02	03	q
Elemental Phosphorus	Furnace off-gas solids	01	02	03	r
	Furnace scrubber blowdown	01	02	03	s
	Process wastewater	01	02	03	t
	Slag	01	02	03	u
Hydrofluoric Acid	Fluorogypsum (HF residue)	01	02	03	v
Iron	Air pollution control dust/slurry from blast furnaces	01	02	03	w
	Blast furnace slag	01	02	03	x
Lanthanides	Waste ammonium nitrate process solution	01	02	03	y

CONTINUED ON NEXT PAGE

NOTICE: If the film image is less clear than this notice, it is due to the quality of the document being filmed

MW2F 006

059

1.4 (continued)

Commodity	Special Waste	Calendar Year 1984-87	1988	1989	For EPA Use
Primary Lead	Acid plant blowdown	01	02	03	z
	Process wastewater	01	02	03	aa
	Slag	01	02	03	bb
Lightweight Aggregate	Scrubber wastewater	01	02	03	cc
	Wastewater treatment solids	01	02	03	dd
Magnesium	Wastewater from the anhydrous process	01	02	03	ee
Primary Molybdenum	Selenium plant effluent from processing acid plant blowdown	01	02	03	ff
Phosphoric Acid	Phosphogypsum	01	02	03	gg
	Process wastewater	01	02	03	hh
Soda Ash	Wastes from trona ore processing	01	02	03	ii
Steel	Basic oxygen furnace slag	01	02	03	jj
Primary Tin	Scrubber blowdown	01	02	03	kk
	Slag	01	02	03	ll
Primary Titanium	Chloride processing waste acids	01	02	03	mm
	Chloride processing waste solids	01	02	03	nn
	Leach liquor	01	02	03	oo
	Sulfate processing waste acids	01	02	03	pp
	Sulfate processing waste solids	01	02	03	qq
Primary Zinc	Acid plant blowdown	01	02	03	rr
	Goethite	01	02	03	ss
	Process wastewater	01	02	03	tt
	Zinc-lean slag	01	02	03	uu

IF THIS FACILITY DID NOT GENERATE ANY OF THESE SPECIAL WASTES SINCE JANUARY 1, 1984, SKIP TO SECTION 9.

NOTICE: If the film image is less clear than this notice, it is due to the quality of the document being filmed

MW2F 006

0060

1.5 Are ALL the processing units at this facility that generate the special wastes now PERMANENTLY CLOSED?
(Circle one number.)

01 Yes *(SKIP TO SECTION 9)*
(02) No *(CONTINUE TO NEXT QUESTION)*

1.6 Were any of the following operations active at this facility any time since January 1, 1984?
(For each operation, circle 01 for Yes or 02 for No.)

Operation	Yes	No
a. Mining	01	(02)
b. Dump/heapleaching	01	(02)
c. Beneficiation	01	(02)

1.7 What are the name and location of the company that *operates* this facility?

Name of operating company: AGRICO CHEMICAL CO.

City: UNCLE SAM State or Country: LA

1.8 Is this operating company owned by a *parent* company?
(Circle one number.)

(01) Yes *(CONTINUE TO NEXT QUESTION)*
02 No *(SKIP TO QUESTION 1.10 ON NEXT PAGE)*

1.9 What are the name and location of the parent operating company?
(If there is more than one parent operating company, provide the name and address of the other parent operating companies in the FACILITY NOTES section at the end of this questionnaire.)

Name of parent operating company: FREEPORT McMORAN RESOURCE PARTNERS, LIMITED PARTNERSHIP

City: New Orleans State or Country: LA

NOTICE: If the film image is less clear than this notice, it is due to the quality of the document being filmed

MW2F 006

001

1.10 Does the company that *operates* this facility also *own* this facility?
(Circle one number.)

01 Yes *(SKIP TO QUESTION 1.14 ON NEXT PAGE)*
02 No *(CONTINUE TO NEXT QUESTION)*

1.11 What are the name and location of the company that *owns* this facility?
(If there is more than one owner, provide the name and address of the other owners in the FACILITY NOTES section at the end of this questionnaire.)

Name of owner: _____

City: _____ State or Country: _____

1.12 Is the company that owns this facility owned by a *parent* company?
(Circle one number.)

01 Yes *(CONTINUE TO NEXT QUESTION)*
02 No *(SKIP TO QUESTION 1.14 ON NEXT PAGE)*

1.13 What are the name and location of the parent company?
(If there is more than one parent company, provide the name and address of the other parent companies in the FACILITY NOTES section at the end of this questionnaire.)

Name of parent company: _____

City: _____ State or Country: _____

NOTICE: If the film image is less clear than this notice, it is due to the quality of the document being filmed

MW2F 006

0062

1.14 Provide a detailed map of this facility, indicating property boundaries and labeling all waste management units and relevant environmental monitoring locations, if any.

Instructions for Completing the FACILITY SITE MAP:

a. *Use an existing map of any size and scale that can adequately show the relative location of waste management units and relevant environmental monitoring locations. Include topography and an appropriate scale for your facility on the map. If a topographic map is unavailable, provide a site map or plot plan.*

b. *Waste management units include wastewater treatment plants, surface impoundments (including tailings ponds and lagoons), waste piles, residuals stockpiles, landfills, underground injection wells, gypsum stacks, and mines, quarries, or stopes where the facility's solid wastes are treated, stored, or disposed. Label each of these waste management units with a unique identifier (e.g., WWTP, WP_1, LF_2, etc.) as these units will be referenced later.*

c. *Relevant environmental monitoring locations include ground water monitoring wells, ambient surface water monitoring locations, and ambient air monitoring locations near waste management units that receive special wastes (and their residues) from mineral processing operations.*

AS A GUIDE, A SAMPLE FACILITY SITE MAP IS SHOWN ON THE NEXT PAGE

NOTICE: If the film image is less clear than this notice, it is due to the quality of the document being filmed

MW2F 006

0063

DRAWN BY		CHECKED BY		2-12-87	DRAWING NO.	LO166FS1-A2
DATE		APPROVED BY		2-12-87	REVISED	5-12 7-28-87

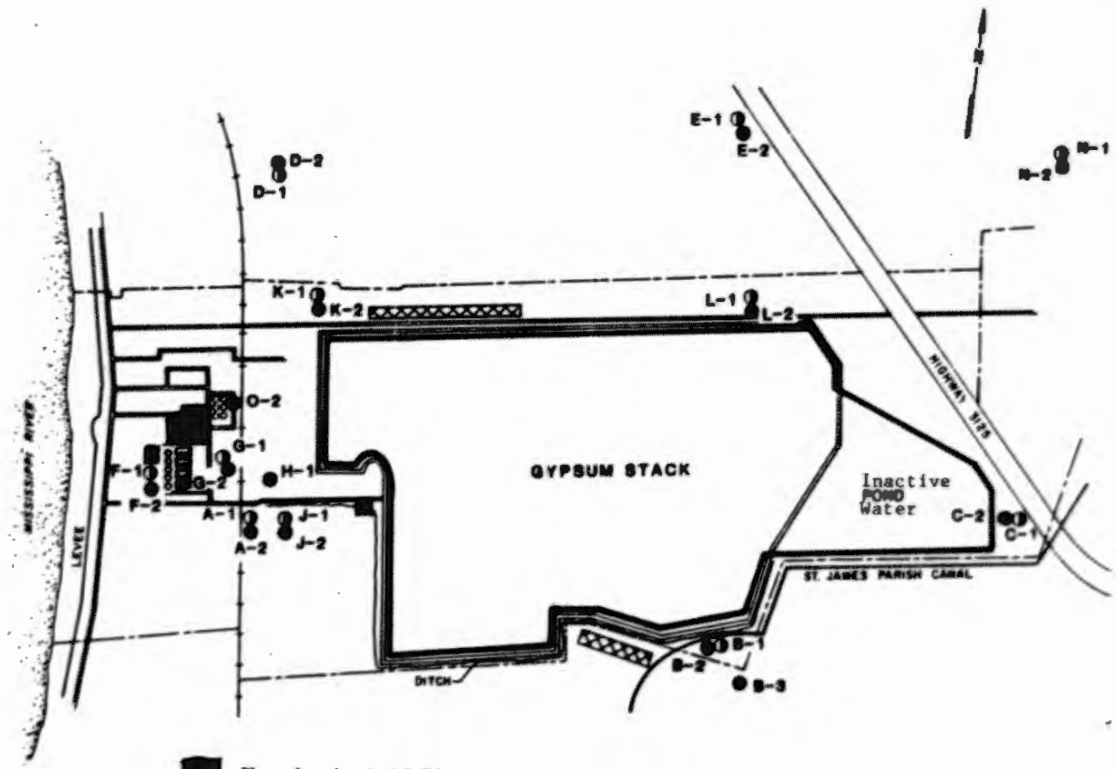

EXPLANATION

A-1 ● SHALLOW WELL

A-2 ● DEEP WELL

FLOWING WELLS

0 2000 FEET

Phosphoric Acid Plant

Sulfuric Acid Plant

Phosphate Rock Grinding Plant

Re-Use Phosphogypsum Pilot Plant

Uranium Recovery Plant

Waste Water Treatment Plant

PLANT AREA LAYOUT
AND
MONITORING WELL LOCATIONS

AGRICO CHEMICAL COMPANY
Uncle Sam, Louisiana

GERAGHTY & MILLER, INC.
Ground-Water Consultants

PA 045

NOTICE: If the film image is less clear than this notice, it is due to the quality of the document being filmed

MW2F 006

0064

PA 045 — Plant Boundary

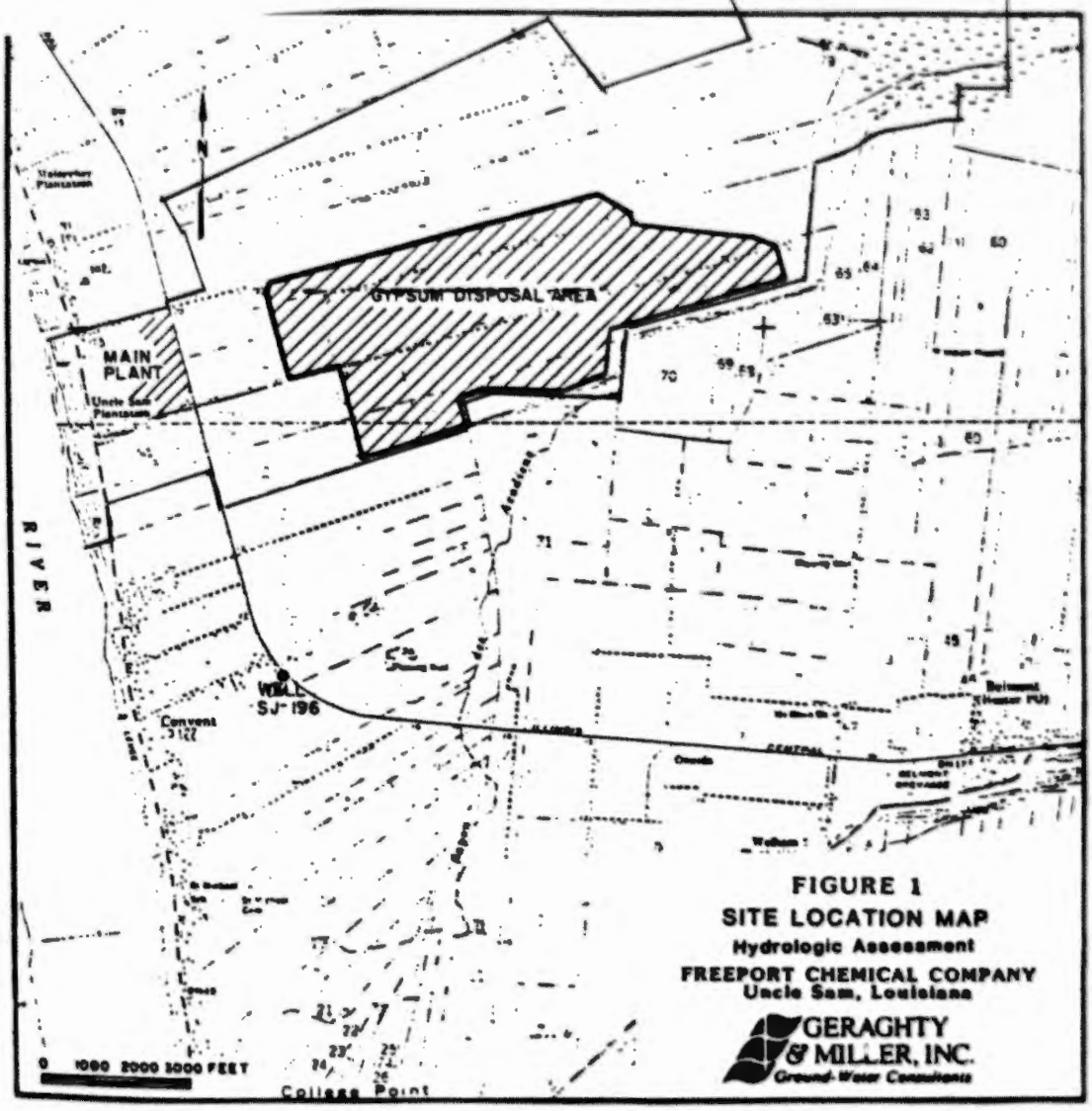

FIGURE 1
SITE LOCATION MAP
Hydrologic Assessment
FREEPORT CHEMICAL COMPANY
Uncle Sam, Louisiana

GERAGHTY & MILLER, INC.
Ground-Water Consultants

NOTICE: If the film image is less clear than this notice, it is due to the quality of the document being filmed

MW2F 006

0065

SAMPLE FACILITY SITE MAP

LEGEND

OR: Ore Roaster	WP1: Waste Pile #1	SI: Surface Impoundment
SIN: Sinter Plant	WP2: Waste Pile #2	UIW: Underground Injection Well
FUR: Furnace	LF1: Landfill # 1	X: Ground-Water Monitoring Well
REF: Refinery	LF2: Landfill #2	--- Site Boundary
WWTP: Waste Water Treatment Plant	AP: Acid Plant	

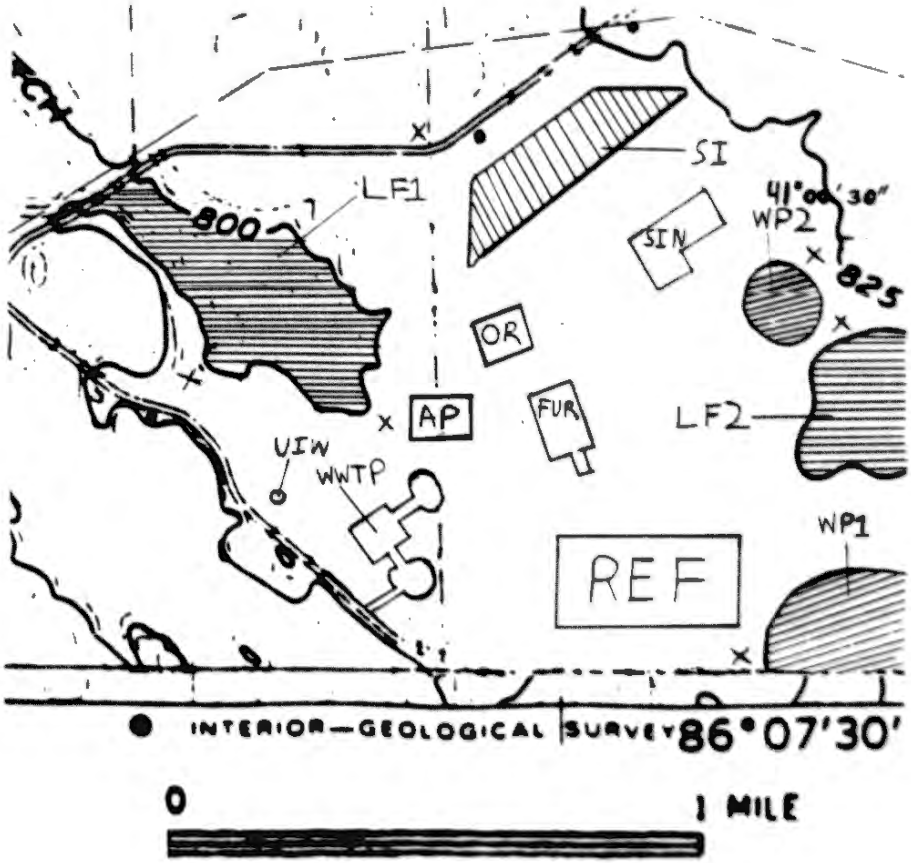

NOTICE: If the film image is less clear than this notice, it is due to the quality of the document being filmed

MW2F 006

0066

1.15 What is the approximate location of the center of this facility?
(Report longitude and latitude OR township, range, and section.)

a. Longitude: 090 degrees 50 minutes West

b. Latitude: 30 degrees 02 minutes North

OR

c. Township: ~~118~~, 125 Range: ~~4E~~ Section: ~~1, 9, 8, 20, 21, 32, 28, 24, 29, 30~~

1.16 Which of the following categories describes the surface rights ownership of the land on which this facility is located?
(Circle all numbers that apply.)

01 Federal

02 State

03 Indian

(04) Private

05 Other *(specify)* _____

1.17 Is any part of this facility located in one of the following areas?
*(For each category, circle 01 for Yes or 02 for No. See the **Instructions and Definitions** booklet for definitions of the categories.)*

Category	Yes	No
a. 100-year floodplain	01	(02)
b. Area designated as a wetland	01	(02)
c. Karst terrain	01	(02)
d. Fault area	01	(02)
e. Endangered species habitat	01	(02)

1.18 What is the approximate number of residents living within the boundary of this facility?
(If none, enter "0".)

0 residents

NOTICE: If the film image is less clear than this notice, it is due to the quality of the document being filmed

MW2F 006

007

1.19 What is the approximate number of residents living within ONE MILE OUTSIDE the boundary of this facility?
(If none, enter "0".)

100 residents

1.20 How far outside the boundary of this facility is the nearest residence?
(Select one of the two specified units of measure.)

_____ yards **OR** 0.5 miles

1.21 What is the general direction of the nearest residence from this facility?
(Circle one number.)

01 North
02 Northeast
03 East
04 Southeast
05 South
06 Southwest
07 West
08 Northwest

1.22 Are any public or private drinking water wells located within the boundary of this facility or within one mile outside the boundary of this facility?
(For each type of well, circle 01 for Yes, 02 for No, or 03 for Unknown.)

Drinking Water Wells	Yes	No	Unknown
a. Public	01	02	03
b. Private	01	02	03

NOTICE: If the film image is less clear than this notice, it is due to the quality of the document being filmed

MW2F 006

0068

1.23 Provide a schematic that shows and labels all ACTIVE MINERAL PROCESSING UNITS at this facility in 1988, *both* those that generated or received a special waste (or its residue) and those that generated or received other solid wastes in 1988, *and* those WASTE MANAGEMENT UNITS that received one or more of the special wastes (or their residues) in 1988.

Instructions for Completing the SCHEMATIC:

a. *For the purposes of this questionnaire, processing units are distinct steps in processing operations whereby ores or minerals, or beneficiated ores or minerals, are partially or wholly transformed into saleable products. Additionally, include acid plants, air pollution control devices, and cooling towers as processing units.*

b. *Combine processing units of the same type if they generate the same type of solid waste.*

c. *Identify the products and by-products produced by each processing unit, where applicable.*

d. *Identify the special waste(s) generated by the processing units.*

e. *Include inactive processing units during 1988 and new processing units during 1989 in the schematic if they were active during 1989 or if they are expected to be active anytime during calendar years 1989 through 1993. Use an asterisk (*) to distinguish these processing units from those that were active in 1988.*

f. *Waste management units include wastewater treatment plants, surface impoundments (including tailings ponds and lagoons), waste piles, residuals stockpiles, landfills, underground injection wells, gypsum stacks, and mines, quarries, or stopes where the facility's special wastes (or their residues) are treated, stored, or disposed.*

g. *Use the same labels for the waste management units as the labels used on the FACILITY SITE MAP provided earlier in this section.*

h. *Identify all types of solid waste received by these waste management units and the sources of these solid waste on the schematic. Additionally, indicate the destination of any residues leaving a waste management unit.*

i. *Include inactive waste management units during 1988 and new waste management units during 1989 in the schematic if they received a special waste in 1989 or if they are expected to receive a special waste anytime during calendar years 1989 through 1993. Use an asterisk (*) to distinguish these waste management units from those that were active in 1988.*

AS A GUIDE, A SAMPLE SCHEMATIC IS SHOWN ON THE NEXT PAGE.

NOTICE: If the film image is less clear than this notice, it is due to the quality of the document being filmed

MW2F 006

0069

PA 045

Production Process and Waste Management Schematic
Agrico Uncle Sam Plant

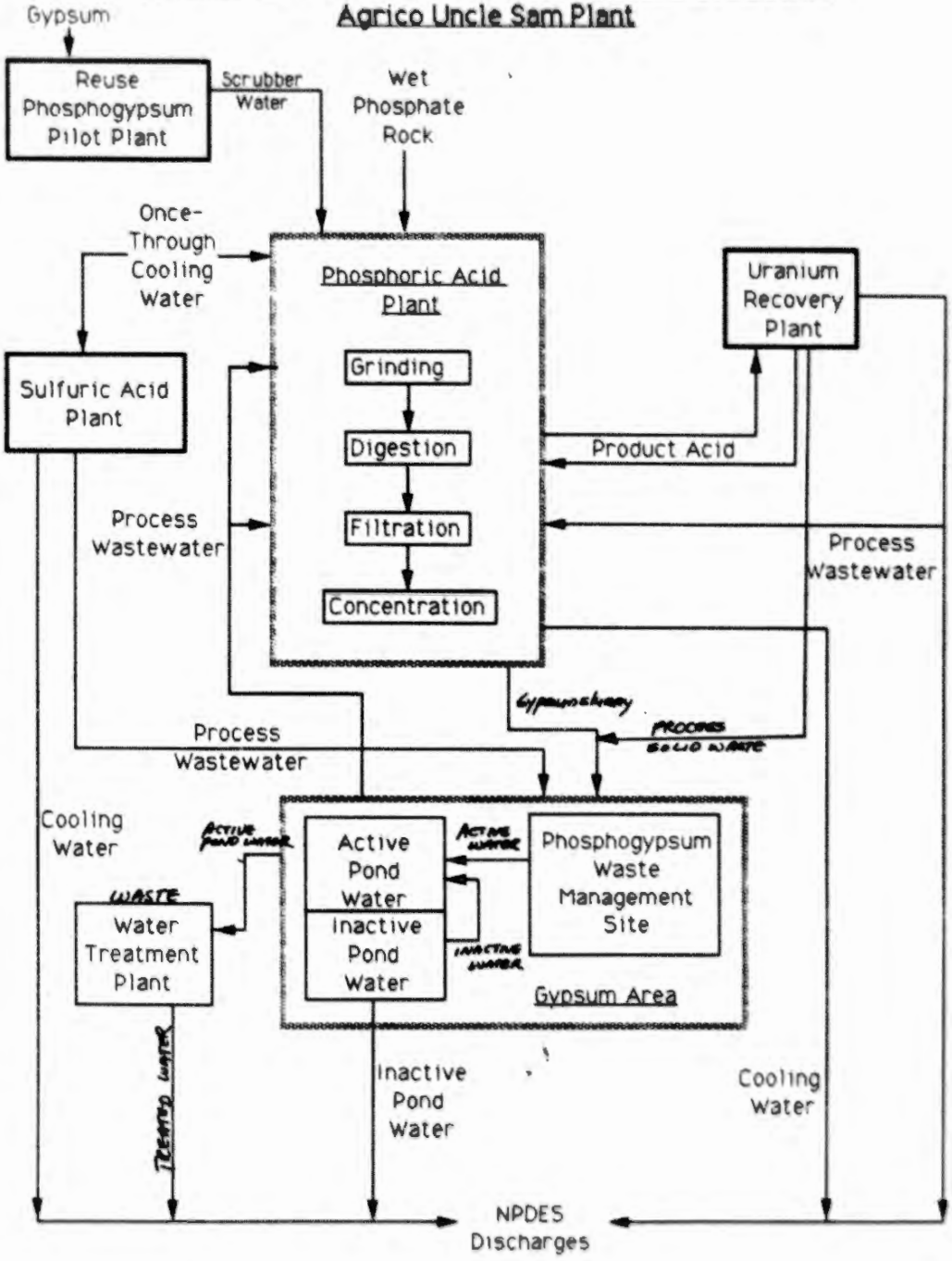

NOTICE: If the film image is less clear than this notice, it is due to the quality of the document being filmed

MW2F 006

0070

EXAMPLE PRODUCTION PROCESS AND WASTE MANAGEMENT SCHEMATIC

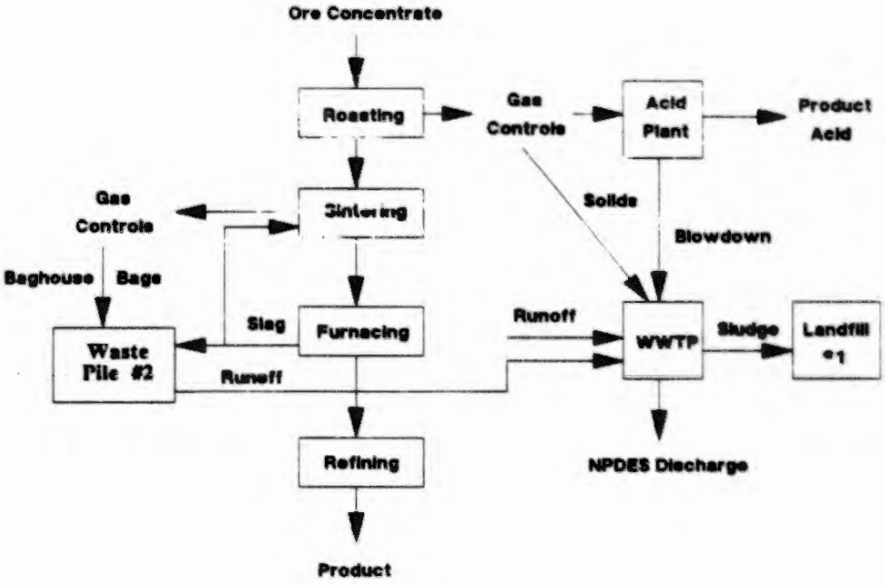

NOTICE: If the film image is less clear than this notice, it is due to the quality of the document being filmed

MW2F 006

0071

1.24 Does this facility have a written source reduction or waste minimization program/policy?
(Circle one number.)

(01) Yes
02 No

1.25 Does this facility have any goal(s) for source reduction or waste minimization?
(Circle one number.)

(01) Yes *(CONTINUE TO NEXT QUESTION)*
02 No *(SKIP TO SECTION 2)*

1.26 Describe the facility's source reduction or waste minimization goals, including the time period pertaining to the goal(s).
(For example, a facility may have a source reduction goal of 25% between 1988 and 1993 or it may have a source reduction goal of 6% per year for 10 years starting in 1989.)

The facility is in the process of evaluating the phosphogypsum recycling project (Re-use), once the evaluation is completed and a full size recycling plant is realized, a source reduction goal of 40% could be achieved

NOTICE: If the film image is less clear than this notice, it is due to the quality of the document being filmed

MW2F 006

0072

SECTION 2

SPECIAL WASTES AND PROCESSING UNITS THAT GENERATE THEM

As indicated in Section 1, the SPECIAL WASTES are:

Alumina
- Pisolites
- Red or brown refining muds

Beryllium
- Barren filtrate
- Bertrandite thickener slurry
- Beryl plant discard
- Processing raffinate
- Sludge leaching slurry

Cerium
- Process water

Primary Chromite
- Roast/leach ore residue

Coal Gas
- Ash
- Cooling tower blowdown
- Process wastewater

Primary Copper
- Acid plant blowdown
- Bleed electrolyte
- Process wastewater
- Roast/leach acid plant residue
- Slag

Elemental Phosphorus
- Furnace off-gas solids
- Furnace scrubber blowdown
- Process wastewater
- Slag

Hydrofluoric Acid
- Fluorogypsum

Iron
- Air pollution control dust/slurry from blast furnaces
- Blast furnace slag

Lanthanides
- Waste ammonium nitrate process solution

Primary Lead
- Acid plant blowdown
- Process wastewater
- Slag

Lightweight Aggregate
- Scrubber wastewater
- Wastewater treatment solids

Magnesium
- Wastewater from the anhydrous process

Primary Molybdenum
- Selenium plant effluent from processing acid plant blowdown

Phosphoric Acid
- Phosphogypsum
- Process wastewater

Soda Ash
- Wastes from trona ore processing

Steel
- Basic oxygen furnace slag

Primary Tin
- Scrubber blowdown
- Slag

Primary Titanium
- Chloride processing waste acids
- Chloride processing waste solids
- Leach liquor
- Sulfate processing waste acids
- Sulfate processing waste solids

Primary Zinc
- Acid plant blowdown
- Goethite
- Process wastewater
- Zinc-lean slag

NOTICE: If the film image is less clear than this notice, it is due to the quality of the document being filmed

MW2F 006

0073

Section 2 contains a set of questions that you complete for EACH processing unit that GENERATED a special waste in 1988. (These processing units must be shown on the schematic prepared in Section 1.) For example, if the reactor in a copper smelting operation generated slag (which is a special waste) in 1988, then you complete a question set on the reactor (the processing unit that generated the special waste). If another processing unit (such as the acid plant) generated another special waste (such as acid plant blowdown) in 1988, then you also complete a set of questions on this second processing unit (i.e., the acid plant) that generated a special waste. Finally, if two processing units generated the same special waste (e.g., process wastewater) in 1988, then you complete a question set on each processing unit. In summary, you complete a question set for EACH processing unit that generated a special waste in 1988. However, do not complete a question set on processing units that are now permanently closed.

2.1 Did a processing unit at the facility GENERATE a special waste in 1988?
(Circle one number.)

01 Yes *(CONTINUE WITH THIS SECTION OF THE QUESTIONNAIRE)*
02 No *(CALL THE SURVEY HELPLINE)*

Only one question set is provided in this section of the questionnaire. One more question set is provided in the *Extra Question Sets* booklet. If your facility had more than two processing units that generated special wastes in 1988, please make as many additional copies of the extra Section 2 question set as needed.

If you are unsure about how many Section 2 question sets to complete for your facility, please call the SURVEY HELPLINE (1-800-635-8850). Additionally, call the SURVEY HELPLINE for further instructions if one processing unit generated MORE THAN ONE special waste.

For EPA use: 5.4

NOTICE: If the film image is less clear than this notice, it is due to the quality of the document being filmed

MW2F 006

0074

QUESTION SET FOR A PROCESSING UNIT GENERATING A SPECIAL WASTE

Answer Questions 2.2 through 2.32 for each processing unit that generated a special waste in 1988. The special wastes are listed on page 2-1. The processing unit must be shown on the schematic prepared for Section 1. Call the SURVEY HELPLINE (1-800-635-8850) for further instructions if a processing unit generated more than one special waste.

2.2 Which processing unit is the subject of this question set?

(Use the label on the schematic prepared for Section 1 to identify this processing unit.)

Label on processing unit: Phosphoric Acid Plant

2.3 Which special waste did this processing unit generate in 1988?

(The special wastes are listed on page 2-1.)

Name of special waste : phosphogypsum * * see facility note

2.4 What calendar year was this processing unit first operational?

Year: 1968

2.5 What calendar year was this processing unit last rebuilt or modernized?

*(See the **Instructions and Definitions** booklet for definitions of "rebuilt" and "modernized.")*

Year: 1968

2.6 What was the DAILY maximum practical operating capacity of this processing unit in 1988?

(Express your answer in terms of this processing unit's principal product by volume.)

2,500 short tons/day * ~~see facility note~~

2.7 How many days in 1988 was this processing unit in operation?

(Count partial days that the unit was in operation as whole days. For example, if the unit was in operation for half a day on 4 different days, count this as 4 full days.)

310 operating days

NOTICE: If the film image is less clear than this notice, it is due to the quality of the document being filmed

MW2F 006

0075

2.8 What was the PRINCIPAL product (by volume) produce by this processing unit in 1988?

Name of principal product: Phosphoric Acid

2.9 How much of the principal product did this processing ur produce in 1988?
(Report the quantity as generated.)

Quantity produced: 880,000 * short tons ~~as P2O5~~ t ~~all facility note~~

2.10 What OTHER products (EXCLUDING THE SPECIAL ' ASTE) were produced by this processing unit and how much was produced in 1988
(Report the quantities as generated.)

Other Product	Qua tity in 1988	
a. Hydrofluorosilic Acid	8,0	short tons
b. Silicon Tetrafluoride Gas	1,8	short tons
c.		short tons
d.		short tons
e.		short tons
f.		short tons
g.		short tons
h.		short tons

2.11 How much of the special waste did this processing unit ge erate in 1988?
(Report the quantity as generated and be sure to indicate the nit of measure for this quantity.)

Quantity generated: 4,500,000 ~~P2O5~~ 32
(unit of measure)

NOTICE: If the film image is less clear than this notice, it is due to the quality of the document being filmed

MW2F 006

0076

2.12 Was this special w te a solid as it came out of the processing unit?
(Circle one numbe

(01) Yes *(CONTI 'E TO NEXT QUESTION)*
02 No *(SKIP T(QUESTION 2.14)*

2.13 Which of the follo ng categories best describes the typical size of the special waste at the point of gen ation?
(Circle one numbe

(01) Smaller than sa l (less than .02 mm in diameter)
02 Sand (between 2mm and 2 mm in diameter)
03 Gravel (betwee 2 mm and 3" in diameter)
04 Cobble (betwe 3" and 12" in diameter)
05 Boulder (greate han 12" in diameter)

SI P TO QUESTION 2.15 ON NEXT PAGE

2.14 What were the pH nd total solids content of this special waste in 1988?
(Select one of the t specified units of measure for total solids content.)

a. pH: ____ S.U.

b. Total solids cor nt: _____ % **OR** _____ ppm

NOTICE: If the film image is less clear than this notice, it is due to the quality of the document being filmed

MW2F 006

0071

2.15 What were the other characteristics of this special waste in 1988?

*(Provide a composition code from Appendix A in the **Instructions and Definitions** booklet and an average concentration for the parameters and/or constituents that characterize this special waste. Be sure to indicate the unit of measure applying to the average concentration. The basis for your answer to this question may be either test results or general knowledge of the special waste. YOU DO NOT HAVE TO CONDUCT ADDITIONAL TESTING TO RESPOND TO THIS QUESTION.)*

	Waste Composition Code	Average Concentration	Unit of Measure for Average Concentration
a.	W026	0.0	~~percent~~ 41
b.	W027	[redacted] ~~<4~~	~~mg/kg~~ 41
c.	W028	[redacted] ~~<5~~	~~mg/kg~~ 41
d.	W029	60	~~mg/kg~~ 41
e.	W030	[redacted] ~~<0.5~~	~~mg/kg~~ 41
f.	W032	1.0	~~mg/kg~~ 41
g.	W033	[redacted] ~~<30~~	~~mg/kg~~ 41
h.	W034	[redacted] ~~<2~~	~~mg/kg~~ 41
i.	W035	6	~~mg/kg~~ 41
j.	W036	880	~~mg/kg~~ 41
k.	W037	9	~~mg/kg~~ 41
l.	W038	6	~~mg/kg~~ 41
m.	W039	0.07	~~mg/kg~~ 41
n.	W040	[redacted] ~~<1~~	~~mg/kg~~ 41
o.	W041	9	~~mg/kg~~ 41

~~* See footing note for other elements~~

NOTICE: If the film image is less clear than this notice, it is due to the quality of the document being filmed

MW2F 006

0078

2.20 What was the INITIAL DESTINATION of the special waste shipped offsite for treatment or disposal in 1988?

(Circle one number.)

01 Subtitle C treatment, storage, or disposal facility

02 Land disposal facility (not a Subtitle C facility)

03 Deep-well injection

04 Treatment/reclamation/recovery facility

05 Other *(specify)*: _____

_____

_____

06 Unknown *(SKIP TO QUESTION 2.23)*

2.21 Does your company operate the facility identified in the previous question?

(Circle one number.)

01 Yes *(SKIP TO QUESTION 2.23)*

02 No *(CONTINUE TO NEXT QUESTION)*

2.22 What are the name, address, and telephone number of the facility identified in Question 2.20?

Name: _____

Address : _____

City: _____ State or Country: _____ Zip: _____

Telephone number : ( ) _____

2.23 Was any of the special waste generated by this processing unit DISCHARGED WITHOUT TREATMENT through permitted NPDES or state PDES outfalls or SENT WITHOUT TREATMENT to a POTW in 1988?

*(Circle one number. See the **Instructions and Definitions** booklet for definitions of NPDES, PDES, and POTW if these acronyms are unfamiliar.)*

01 Yes *(CONTINUE TO NEXT QUESTION)*

02 No *(SKIP TO QUESTION 2.25 ON NEXT PAGE)*

NOTICE: If the film image is less clear than this notice, it is due to the quality of the document being filmed

MW2F 006

0079

2.16 Was any of the special waste generated by this processing unit SOLD without onsite modification in 1988?
(Circle one number.)

01 Yes *(CONTINUE TO NEXT QUESTION)*
02 No *(SKIP TO QUESTION 2.18)*

2.17 How much of the special waste was sold in 1988 without onsite modification?
(Report the quantity as generated and be sure to indicate the unit of measure for this quantity.)

Quantity sold: _____ _____
(unit of measure)

2.18 Was any of the special waste generated by this processing unit SHIPPED OFFSITE for treatment or disposal in 1988 without onsite modification?
(Circle one number.)

01 Yes *(CONTINUE TO NEXT QUESTION)*
02 No *(SKIP TO QUESTION 2.23 ON NEXT PAGE)*

2.19 How much of the special waste was shipped offsite for treatment or disposal in 1988 without onsite modification?
(Report the quantity as generated and be sure to indicate the unit of measure for this quantity.)

Quantity shipped offsite: _____ _____
(unit of measure)

NOTICE: If the film image is less clear than this notice, it is due to the quality of the document being filmed

MW2F 006

0080

2.26 How much of the special waste was INITIALLY SENT to each of the following ONSITE destinations in 1988?

(Report the quantities as generated and be sure to indicate the unit of measure for the quantities. For each onsite destination that did not receive the special waste, enter "0" for the quantity.)

Initial Onsite Destination	Quantity in 1988	Unit of Measure
a. Recycled without treatment to the same processing unit	0	~~Tons~~ 32
b. Sent without treatment to other onsite processing units: *(Indicate which units using the labels on the schematic prepared for Section 1.)*		
RE-USE phosphogypsum Pilot Plant	78	~~Tons~~ 32
c. Sent to onsite waste management units: *(Indicate which units using the labels on the schematic prepared for Section 1.)*		
Phosphogypsum Waste Management Site	4,500,000	~~Tons~~ 32
d. Other *(specify)*:		

Should be zero. 78 tons were removed from the gyp stack as reflected on Question 6.21. and not the fresh gyp slurry. LGM 11/28/89

NOTICE: If the film image is less clear than this notice, it is due to the quality of the document being filmed

MW2F 006

0081

2.24 How much of the special waste was discharged without treatment through permitted NPDES or state PDES outfalls or sent without treatment to a POTW in 1988?
(Report the quantity as generated using one of the two specified units of measure.)

_____ gallons **OR** _____ acre-feet

2.25 Was any of the special waste generated by this processing unit SENT TO one or more ONSITE processing or waste management units in 1988?
(Circle one number.)

(01) Yes *(CONTINUE TO NEXT QUESTION)*
02 No *(SKIP TO QUESTION 2.27 ON PAGE 2-11)*

NOTICE: If the film image is less clear than this notice, it is due to the quality of the document being filmed
MW2F 006
0082

2.27 **Which of the following source reduction and recycling practices were FIRST APPLIED to this processing unit in 1988?**
(Circle all numbers that apply. Do not include "downstream" source reduction and recycling practices in your answer.)

01 Equipment or technology modification/substitution

02 Process or procedure modification/substitution (including closed-loop recycling)

03 Reformulation or redesign of product

04 Modification/substitution of input or raw material

05 Better housekeeping, better operating practices

06 Waste stream segregation

07 Onsite recycling or recovery for reuse

08 Offsite recycling or recovery for reuse

09 Other *(specify)*: _____

_____

_____

10 None *(SKIP TO QUESTION 2.30 ON NEXT PAGE)*

2.28 **Briefly describe the source reduction and recycling practices that were FIRST APPLIED to this processing unit in 1988.**

_____

_____

_____

_____

_____

2.29 **Approximately how much in percentage terms did these NEW source reduction or recycling practices REDUCE the generation of the special waste in 1988 compared to the amount that would have been generated in the absence of these practices?**

Reduction in special waste generated: _____ percent

NOTICE: If the film image is less clear than this notice, it is due to the quality of the document being filmed

MW2F 006

0083

2.30 In addition to generating a special waste, did this processing unit also RECEIVE a special waste in 1988?

(Circle one number.)

(01) Yes *(CONTINUE TO NEXT QUESTION)*

02 No *(SKIP TO QUESTION 2.32)*

2.31 Which special waste(s) was (were) received by this processing unit and how much was received in 1988?

(Report the quantities as generated and be sure to indicate the units of measure for these quantities.)

	Special Waste Received	Quantity in 1988	Unit of Measure
a.	* See detail in facility note		
b.			
c.			
d			
e.			
f.			
g.			

2.32 Is there another processing unit at this facility that GENERATED a special waste in 1988?

(Circle one number.)

(01) Yes *(COMPLETE A QUESTION SET FROM THE EXTRA QUESTION SETS BOOKLET ON THIS OTHER PROCESSING UNIT)*

02 No *(CONTINUE TO NEXT PAGE)*

NOTICE: If the film image is less clear than this notice, it is due to the quality of the document being filmed

MW2F 006

0084

QUESTION SET FOR A PROCESSING UNIT GENERATING A SPECIAL WASTE

Answer Questions 2.2 through 2.32 for each processing unit that generated a special waste in 1988. The special wastes are listed on page 2-1 of the Questionnaire booklet. The processing unit must be shown on the schematic prepared for Section 1. Call the SURVEY HELPLINE (1-800-635-8850) for further instructions if a processing unit generated more than one special waste.

2.2 Which processing unit is the subject of this question set?

(Use the label on the schematic prepared for Section 1 to identify this processing unit.)

Label on processing unit: Phosphoric Acid Plant

2.3 Which special waste did this processing unit generate in 1988?

(The special wastes are listed on page 2-1 of the Questionnaire booklet.)

Name of special waste : Press Waste water * ~~* see facility note~~

2.4 What calendar year was this processing unit first operational?

Year: 1968

2.5 What calendar year was this processing unit last rebuilt or modernized?

(See the Instructions and Definitions booklet for definitions of "rebuilt" and "modernized.")

Year: 1968

2.6 What was the DAILY maximum practical operating capacity of this processing unit in 1988?

(Express your answer in terms of this processing unit's principal product by volume.)

2,500 short tons/day

2.7 How many days in 1988 was this processing unit in operation?

(Count partial days that the unit was in operation as whole days. For example, if the unit was in operation for half a day on 4 different days, count this as 4 full days.)

310 operating days

NOTICE: If the film image is less clear than this notice, it is due to the quality of the document being filmed

MW2F 006

0085

2.8 **What was the PRINCIPAL product (by volume) produced by this processing unit in 1988?**

Name of principal product: Phosphoric Acid

2.9 **How much of the principal product did this processing unit produce in 1988?**
(Report the quantity as generated.)

Quantity produced: 800,000 short tons . (~~as P2O5~~)

2.10 **What OTHER products (EXCLUDING THE SPECIAL WASTE) were produced by this processing unit and how much was produced in 1988?**
(Report the quantities as generated.)

	Other Product	Quantity in 1988	
a.	Hydrofluosilic Acid	8,000	short tons
b.	Silicon Tetrafluoride Gas	1,800	short tons
c.			short tons
d.			short tons
e.			short tons
f.			short tons
g.			short tons
h.			short tons

2.11 **How much of the special waste did this processing unit generate in 1988?**
(Report the quantity as generated and be sure to indicate the unit of measure for this quantity.)

Quantity generated: 1,071,360,000 gallons * 24
(unit of measure)

* see facility note

NOTICE: If the film image is less clear than this notice, it is due to the quality of the document being filmed

MW2F 006

0086

2.12 **Was this special waste a solid as it came out of the processing unit?**
(Circle one number.)

01 Yes *(CONTINUE TO NEXT QUESTION)*
02 No *(SKIP TO QUESTION 2.14)* ← see facility note 2.11

2.13 **Which of the following categories best describes the typical size of the special waste at the point of generation?**
(Circle one number.)

01 Smaller than sand (less than .02 mm in diameter)

02 Sand (between .02mm and 2 mm in diameter)

03 Gravel (between 2 mm and 3" in diameter)

04 Cobble (between 3" and 12" in diameter)

05 Boulder (greater than 12" in diameter)

SKIP TO QUESTION 2.15 ON NEXT PAGE

2.14 **What were the pH and total solids content of this special waste in 1988?**
(Select one of the two specified units of measure for total solids content.)

a. pH: 1.0 S.U.

b. Total solids content: don't know % OR _____ ppm

NOTICE: If the film image is less clear than this notice, it is due to the quality of the document being filmed

MW2F 006

0087

2.15 What were the other characteristics of this special waste in 1988?

*(Provide a composition code from Appendix A in the **Instructions and Definitions** booklet and an average concentration for the parameters and/or constituents that characterize this special waste. Be sure to indicate the unit of measure applying to the average concentration. The basis for your answer to this question may be either test results or general knowledge of the special waste. YOU DO NOT HAVE TO CONDUCT ADDITIONAL TESTING TO RESPOND TO THIS QUESTION.)*

	Waste Composition Code	Average Concentration	Unit of Measure for Average Concentration
a.	W054 W077	1.65	Pb Pos 43
b.	W069	0.60	~~Pb~~ E 43
c.			
d.			
e.			
f.			
g.			
h.			
i.			
j.			
k.			
l.			
m.			
n.			
o.			

NOTICE: If the film image is less clear than this notice, it is due to the quality of the document being filmed

MW2F 006

0088

2.16 **Was any of the special waste generated by this processing unit SOLD without onsite modification in 1988?**
(Circle one number.)

01 Yes *(CONTINUE TO NEXT QUESTION)*
02 No *(SKIP TO QUESTION 2.18)*

2.17 **How much of the special waste was sold in 1988 without onsite modification?**
(Report the quantity as generated and be sure to indicate the unit of measure for this quantity.)

Quantity sold: _____ _____
(unit of measure)

2.18 **Was any of the special waste generated by this processing unit SHIPPED OFFSITE for treatment or disposal in 1988 without onsite modification?**
(Circle one number.)

01 Yes *(CONTINUE TO NEXT QUESTION)*
02 No *(SKIP TO QUESTION 2.23 ON NEXT PAGE)*

2.19 **How much of the special waste was shipped offsite for treatment or disposal in 1988 without onsite modification?**
(Report the quantity as generated and be sure to indicate the unit of measure for this quantity.)

Quantity shipped offsite: _____ _____
(unit of measure)

NOTICE: If the film image is less clear than this notice, it is due to the quality of the document being filmed

MW2F 006

0089

2.20 What was the INITIAL DESTINATION of the special waste shipped offsite for treatment or disposal in 1988?
(Circle one number.)

01 Subtitle C treatment, storage, or disposal facility

02 Land disposal facility (not a Subtitle C facility)

03 Deep-well injection

04 Treatment/reclamation/recovery facility

05 Other *(specify)*: _____

_____

_____

06 Unknown *(SKIP TO QUESTION 2.23)*

2.21 Does your company operate the facility identified in the previous question?
(Circle one number.)

01 Yes *(SKIP TO QUESTION 2.23)*
02 No *(CONTINUE TO NEXT QUESTION)*

2.22 What are the name, address, and telephone number of the facility identified in Question 2.20?

Name: _____

Address : _____

City: _____ State or Country: _____ Zip: _____

Telephone number : ( ) _____

2.23 Was any of the special waste generated by this processing unit DISCHARGED WITHOUT TREATMENT through permitted NPDES or state PDES outfalls or SENT WITHOUT TREATMENT to a POTW in 1988?
(Circle one number. See the Instructions and Definitions booklet for definitions of NPDES, PDES, and POTW if these acronyms are unfamiliar.)

01 Yes *(CONTINUE TO NEXT QUESTION)*
02 No *(SKIP TO QUESTION 2.25 ON NEXT PAGE)*

NOTICE: If the film image is less clear than this notice, it is due to the quality of the document being filmed

MW2F 006

0090

2.24 **How much of the special waste was discharged without treatment through permitted NPDES or state PDES outfalls or sent without treatment to a POTW in 1988?**
(Report the quantity as generated using one of the two specified units of measure.)

_____ gallons OR _____ acre-feet

2.25 **Was any of the special waste generated by this processing unit SENT TO one or more ONSITE processing or waste management units in 1988?**
(Circle one number.)

01 Yes *(CONTINUE TO NEXT QUESTION)*
02 No *(SKIP TO QUESTION 2.27 ON PAGE 2-11)*

NOTICE: If the film image is less clear than this notice, it is due to the quality of the document being filmed

MW2F 006

0091

2.26 How much of the special waste was INITIALLY SENT to each of the following ONSITE destinations in 1988?

(Report the quantities as generated and be sure to indicate the unit of measure for the quantities. For each onsite destination that did not receive the special waste, enter "0" for the quantity.)

Initial Onsite Destination	Quantity in 1988	Unit of Measure
a. Recycled without treatment to the same processing unit	0	~~gallons~~ 24
b. Sent without treatment to other onsite processing units: *(Indicate which units using the labels on the schematic prepared for Section 1.)*		
	0	~~gallons~~ 24
c. Sent to onsite waste management units: *(Indicate which units using the labels on the schematic prepared for Section 1.)*		
	0	~~gallons~~ 24
d. Other *(specify)*:		
	1,785,650,000	~~gallons~~ 24 *
		* See faulty note

NOTICE: If the film image is less clear than this notice, it is due to the quality of the document being filmed

MW2F 006

0092

2.27 **Which of the following source reduction and recycling practices were FIRST APPLIED to this processing unit in 1988?**
(Circle all numbers that apply. Do not include "downstream" source reduction and recycling practices in your answer.)

01 Equipment or technology modification/substitution

02 Process or procedure modification/substitution (including closed-loop recycling)

03 Reformulation or redesign of product

04 Modification/substitution of input or raw material

05 Better housekeeping, better operating practices

06 Waste stream segregation

07 Onsite recycling or recovery for reuse

08 Offsite recycling or recovery for reuse

09 Other *(specify)*: _____

_____

_____

(10) None *(SKIP TO QUESTION 2.30 ON NEXT PAGE)*

2.28 **Briefly describe the source reduction and recycling practices that were FIRST APPLIED to this processing unit in 1988.**

_____

_____

_____

_____

_____

2.29 **Approximately how much in percentage terms did these NEW source reduction or recycling practices REDUCE the generation of the special waste in 1988 compared to the amount that would have been generated in the absence of these practices?**

Reduction in special waste generated: _____ percent

NOTICE: If the film image is less clear than this notice, it is due to the quality of the document being filmed
MW2F 006
0093

2.30 **In addition to generating a special waste, did this processing unit also RECEIVE a special waste in 1988?**
(Circle one number.)

01 Yes *(CONTINUE TO NEXT QUESTION)*
(02) No *(SKIP TO QUESTION 2.32 ON NEXT PAGE)*

2.31 **Which special waste(s) was (were) received by this processing unit and how much was received in 1988?**
(Report the quantities as generated and be sure to indicate the units of measure for these quantities.)

Special Waste Received	Quantity in 1988	Unit of Measure
a.		
b.		
c.		
d.		
e.		
f.		
g.		

↑ Should be yes
Receives flow
from Gypsum Area,
see flow sheet. LGH 11/24/99

NOTICE: If the film image is less clear than this notice, it is due to the quality of the document being filmed

MW2F 006

0094

YOU HAVE COMPLETED THIS QUESTION SET

2.32 **Have you completed a question set on ALL processing units at this facility that generated a special waste in 1988?**
(Circle one number.)

1 Yes *(CONTINUE WITH QUESTION 2.33 ON PAGE 2-13 OF THE QUESTIONNAIRE BOOKLET)*

(2) No *(COMPLETE A QUESTION SET ON ONE OF THE REMAINING PROCESSING UNITS THAT GENERATED A SPECIAL WASTE IN 1988.)*

NOTICE: If the film image is less clear than this notice, it is due to the quality of the document being filmed

MW2F 006

0095

QUESTION SET FOR A PROCESSING UNIT GENERATING A SPECIAL WASTE

Answer Questions 2.2 through 2.32 for each processing unit that generated a special waste in 1988. The special wastes are listed on page 2-1 of the Questionnaire booklet. The processing unit must be shown on the schematic prepared for Section 1. Call the SURVEY HELPLINE (1-800-635-8850) for further instructions if a processing unit generated more than one special waste.

2.2 Which processing unit is the subject of this question set?

(Use the label on the schematic prepared for Section 1 to identify this processing unit.)

Label on processing unit: Sulfuric Acid Plant (4 plants)

2.3 Which special waste did this processing unit generate in 1988?

(The special wastes are listed on page 2-1 of the Questionnaire booklet.)

Name of special waste : Water Resulting from Processing of Sulfuric Acid * See facility note

2.4 What calendar year was this processing unit first operational?

Year: 1968* * see facility note

2.5 What calendar year was this processing unit last rebuilt or modernized?

(See the Instructions and Definitions booklet for definitions of "rebuilt" and "modernized.")

Year: 1968* * see facility note

2.6 What was the DAILY maximum practical operating capacity of this processing unit in 1988?

(Express your answer in terms of this processing unit's principal product by volume.)

1650* short tons/day * see facility note

2.7 How many days in 1988 was this processing unit in operation?

(Count partial days that the unit was in operation as whole days. For example, if the unit was in operation for half a day on 4 different days, count this as 4 full days.)

962 operating days

NOTICE: If the film image is less clear than this notice, it is due to the quality of the document being filmed

MW2F 006

0096

2.8 **What was the PRINCIPAL product (by volume) produced by this processing unit in 1988?**

Name of principal product: Sulfuric Acid

2.9 **How much of the principal product did this processing unit produce in 1988?**
(Report the quantity as generated.)

Quantity produced: 2,200,000 short tons

2.10 **What OTHER products (EXCLUDING THE SPECIAL WASTE) were produced by this processing unit and how much was produced in 1988?**
(Report the quantities as generated.)

Other Product	Quantity in 1988
a. None	_____ short tons
b. _____	_____ short tons
c. _____	_____ short tons
d. _____	_____ short tons
e. _____	_____ short tons
f. _____	_____ short tons
g. _____	_____ short tons
h. _____	_____ short tons

2.11 **How much of the special waste did this processing unit generate in 1988?**
(Report the quantity as generated and be sure to indicate the unit of measure for this quantity.)

Quantity generated: 55,000 gallons 24
(unit of measure)

NOTICE: If the film image is less clear than this notice, it is due to the quality of the document being filmed

MW2F 006

0097

2.12 **Was this special waste a solid as it came out of the processing unit?**
(Circle one number.)

01 Yes *(CONTINUE TO NEXT QUESTION)*
02 No *(SKIP TO QUESTION 2.14)*

2.13 **Which of the following categories best describes the typical size of the special waste at the point of generation?**
(Circle one number.)

01 Smaller than sand (less than .02 mm in diameter)

02 Sand (between .02mm and 2 mm in diameter)

03 Gravel (between 2 mm and 3" in diameter)

04 Cobble (between 3" and 12" in diameter)

05 Boulder (greater than 12" in diameter)

SKIP TO QUESTION 2.15 ON NEXT PAGE

2.14 **What were the pH and total solids content of this special waste in 1988?**
(Select one of the two specified units of measure for total solids content.)

a. pH: 1.2 S.U.

b. Total solids content: ~~unknown~~ % OR _____ ppm

NOTICE: If the film image is less clear than this notice, it is due to the quality of the document being filmed

MW2F 006

0098

2.15 What were the other characteristics of this special waste in 1988?

(Provide a composition code from Appendix A in the Instructions and Definitions booklet and an average concentration for the parameters and/or constituents that characterize this special waste. Be sure to indicate the unit of measure applying to the average concentration. The basis for your answer to this question may be either test results or general knowledge of the special waste. YOU DO NOT HAVE TO CONDUCT ADDITIONAL TESTING TO RESPOND TO THIS QUESTION.)

	Waste Composition Code	Average Concentration	Unit of Measure for Average Concentration
a.	W071	5	percent 43
b.			
c.			
d.			
e.			
f.			
g.			
h.			
i.			
j.			
k.			
l.			
m.			
n.			
o.			

NOTICE: If the film image is less clear than this notice, it is due to the quality of the document being filmed

MW2F 006

0099

2.15 What were the other characteristics of this special waste in 1988?

(Provide a composition code from Appendix A in the Instructions and Definitions booklet and an average concentration for the parameters and/or constituents that characterize this special waste. Be sure to indicate the unit of measure applying to the average concentration. The basis for your answer to this question may be either test results or general knowledge of the special waste. YOU DO NOT HAVE TO CONDUCT ADDITIONAL TESTING TO RESPOND TO THIS QUESTION.)

	Waste Composition Code	Average Concentration	Unit of Measure for Average Concentration
a.	W071	5	percent 43
b.			
c.			
d.			
e.			
f.			
g.			
h.			
i.			
j.			
k.			
l.			
m.			
n.			
o.			

NOTICE: If the film image is less clear than this notice, it is due to the quality of the document being filmed

MW2F 006

0099

2.16 **Was any of the special waste generated by this processing unit SOLD without onsite modification in 1988?**
(Circle one number.)

01 Yes *(CONTINUE TO NEXT QUESTION)*
02 No *(SKIP TO QUESTION 2.18)*

2.17 **How much of the special waste was sold in 1988 without onsite modification?**
(Report the quantity as generated and be sure to indicate the unit of measure for this quantity.)

Quantity sold: _____ _____
(unit of measure)

2.18 **Was any of the special waste generated by this processing unit SHIPPED OFFSITE for treatment or disposal in 1988 without onsite modification?**
(Circle one number.)

01 Yes *(CONTINUE TO NEXT QUESTION)*
02 No *(SKIP TO QUESTION 2.23 ON NEXT PAGE)*

2.19 **How much of the special waste was shipped offsite for treatment or disposal in 1988 without onsite modification?**
(Report the quantity as generated and be sure to indicate the unit of measure for this quantity.)

Quantity shipped offsite: _____ _____
(unit of measure)

NOTICE: If the film image is less clear than this notice, it is due to the quality of the document being filmed

MW2F 006

0100

2.20 **What was the INITIAL DESTINATION of the special waste shipped offsite for treatment or disposal in 1988?**
(Circle one number.)

01 Subtitle C treatment, storage, or disposal facility

02 Land disposal facility (not a Subtitle C facility)

03 Deep-well injection

04 Treatment/reclamation/recovery facility

05 Other *(specify)*: _____

_____

_____

06 Unknown *(SKIP TO QUESTION 2.23)*

2.21 **Does your company operate the facility identified in the previous question?**
(Circle one number.)

01 Yes *(SKIP TO QUESTION 2.23)*
02 No *(CONTINUE TO NEXT QUESTION)*

2.22 **What are the name, address, and telephone number of the facility identified in Question 2.20?**

Name: _____

Address : _____

City: _____ State or Country: _____ Zip: _____

Telephone number : ( ) _____

2.23 Was any of the special waste generated by this processing unit DISCHARGED WITHOUT TREATMENT through permitted NPDES or state PDES outfalls or SENT WITHOUT TREATMENT to a POTW in 1988?
(Circle one number. See the Instructions and Definitions booklet for definitions of NPDES, PDES, and POTW if these acronyms are unfamiliar.)

01 Yes *(CONTINUE TO NEXT QUESTION)*
02 No *(SKIP TO QUESTION 2.25 ON NEXT PAGE)*

NOTICE: If the film image is less clear than this notice, it is due to the quality of the document being filmed

MW2F 006

2.24 **How much of the special waste was discharged without treatment through permitted NPDES or state PDES outfalls or sent without treatment to a POTW in 1988?**
(Report the quantity as generated using one of the two specified units of measure.)

_____ gallons OR _____ acre-feet

2.25 **Was any of the special waste generated by this processing unit SENT TO one or more ONSITE processing or waste management units in 1988?**
(Circle one number.)

01 Yes *(CONTINUE TO NEXT QUESTION)*
02 No *(SKIP TO QUESTION 2.27 ON PAGE 2-11)*

NOTICE: If the film image is less clear than this notice, it is due to the quality of the document being filmed

MW2F 006

0102

2.26 How much of the special waste was INITIALLY SENT to each of the following ONSITE destinations in 1988?

(Report the quantities as generated and be sure to indicate the unit of measure for the quantities. For each onsite destination that did not receive the special waste, enter "0" for the quantity.)

Initial Onsite Destination	Quantity in 1988	Unit of Measure
a. Recycled without treatment to the same processing unit	0	~~gallons~~ 24
b. Sent without treatment to other onsite processing units: *(Indicate which units using the labels on the schematic prepared for Section 1.)*		
	0	~~gallons~~ 24
c. Sent to onsite waste management units: *(Indicate which units using the labels on the schematic prepared for Section 1.)*		
Phosphogypsum waste management Site	55,000	~~gallons~~ 24
d. Other *(specify)*:		

NOTICE: If the film image is less clear than this notice, it is due to the quality of the document being filmed

MW2F 006

0103

2.27 **Which of the following source reduction and recycling practices were FIRST APPLIED to this processing unit in 1988?**
(Circle all numbers that apply. Do not include "downstream" source reduction and recycling practices in your answer.)

01 Equipment or technology modification/substitution

02 Process or procedure modification/substitution (including closed-loop recycling)

03 Reformulation or redesign of product

04 Modification/substitution of input or raw material

05 Better housekeeping, better operating practices

06 Waste stream segregation

07 Onsite recycling or recovery for reuse

08 Offsite recycling or recovery for reuse

09 Other *(specify)*: _____

_____

_____

10 None *(SKIP TO QUESTION 2.30 ON NEXT PAGE)*

2.28 **Briefly describe the source reduction and recycling practices that were FIRST APPLIED to this processing unit in 1988.**

_____

_____

_____

_____

_____

2.29 **Approximately how much in percentage terms did these NEW source reduction or recycling practices REDUCE the generation of the special waste in 1988 compared to the amount that would have been generated in the absence of these practices?**

Reduction in special waste generated: _____ percent

NOTICE: If the film image is less clear than this notice, it is due to the quality of the document being filmed

MW2F 006

0104

2.30 In addition to generating a special waste, did this processing unit also RECEIVE a special waste in 1988?

(Circle one number.)

01 Yes *(CONTINUE TO NEXT QUESTION)*
02 No *(SKIP TO QUESTION 2.32 ON NEXT PAGE)*

2.31 Which special waste(s) was (were) received by this processing unit and how much was received in 1988?

(Report the quantities as generated and be sure to indicate the units of measure for these quantities.)

Special Waste Received	Quantity in 1988	Unit of Measure
a.		
b.		
c.		
d.		
e.		
f.		
g.		

NOTICE: If the film image is less clear than this notice, it is due to the quality of the document being filmed

MW2F 006

0105

YOU HAVE COMPLETED THIS QUESTION SET

2.32 **Have you completed a question set on ALL processing units at this facility that generated a special waste in 1988?**
(Circle one number.)

1 Yes *(CONTINUE WITH QUESTION 2.33 ON PAGE 2-13 OF THE QUESTIONNAIRE BOOKLET)*

2 No *(COMPLETE A QUESTION SET ON ONE OF THE REMAINING PROCESSING UNITS THAT GENERATED A SPECIAL WASTE IN 1988.)*

NOTICE: If the film image is less clear than this notice, it is due to the quality of the document being filmed

MW2F 006

0 10b

2.12 **Was this special waste a solid as it came out of the processing unit?**
(Circle one number.)

01 Yes *(CONTINUE TO NEXT QUESTION)*
(02) No *(SKIP TO QUESTION 2.14)*

2.13 **Which of the following categories best describes the typical size of the special waste at the point of generation?**
(Circle one number.)

01 Smaller than sand (less than .02 mm in diameter)

02 Sand (between .02mm and 2 mm in diameter)

03 Gravel (between 2 mm and 3" in diameter)

04 Cobble (between 3" and 12" in diameter)

05 Boulder (greater than 12" in diameter)

SKIP TO QUESTION 2.15 ON NEXT PAGE

2.14 **What were the pH and total solids content of this special waste in 1988?**
(Select one of the two specified units of measure for total solids content.)

[redacted] a. pH: 7.2-6.0 S.U.

[redacted] b. Total solids content: unknown % OR _____ ppm

NOTICE: If the film image is less clear than this notice, it is due to the quality of the document being filmed

MW2F 006

0 1 0 7

2.15 What were the other characteristics of this special waste in 1988?

*(Provide a composition code from Appendix A in the **Instructions and Definitions** booklet and an average concentration for the parameters and/or constituents that characterize this special waste. Be sure to indicate the unit of measure applying to the average concentration. The basis for your answer to this question may be either test results or general knowledge of the special waste. YOU DO NOT HAVE TO CONDUCT ADDITIONAL TESTING TO RESPOND TO THIS QUESTION.)*

	Waste Composition Code	Average Concentration *	Unit of Measure for Average Concentration	
a.	W004	88	~~mg/l~~ 46	* see facility note
b.	W009	1180	~~mg/l~~ 46	
c.	W007	185	~~mg/l~~ 46	
d.	W050	454	~~mg/l~~ 46	
e.	W069	5060	~~mg/l~~ 46	
f.	W010	221	~~mg/l~~ 46	
g.	W054	9021	~~mg/l~~ 46	
h.	W055	37	~~pCi/l~~ 62	
i.	W056	30	~~pCi/l~~ 62	
j.	W059	0.64	~~pCi/l~~ 62	
k.	W071	21.8	~~mg/l~~ 46	
l.	W026	426	~~mg/l~~ 46	
m.	W029	0.09	~~mg/l~~ 46	
n.	W031	0.34	~~mg/l~~ 46	
o.	W034	0.06	~~mg/l~~ 46	

~~cont.~~ in facility note

NOTICE: If the film image is less clear than this notice, it is due to the quality of the document being filmed

MW2F 006

0108

2.16 **Was any of the special waste generated by this processing unit SOLD without onsite modification in 1988?**
(Circle one number.)

01 Yes *(CONTINUE TO NEXT QUESTION)*
02 No *(SKIP TO QUESTION 2.18)*

2.17 **How much of the special waste was sold in 1988 without onsite modification?**
(Report the quantity as generated and be sure to indicate the unit of measure for this quantity.)

Quantity sold: _____ _____
(unit of measure)

2.18 **Was any of the special waste generated by this processing unit SHIPPED OFFSITE for treatment or disposal in 1988 without onsite modification?**
(Circle one number.)

01 Yes *(CONTINUE TO NEXT QUESTION)*
02 No *(SKIP TO QUESTION 2.23 ON NEXT PAGE)*

2.19 **How much of the special waste was shipped offsite for treatment or disposal in 1988 without onsite modification?**
(Report the quantity as generated and be sure to indicate the unit of measure for this quantity.)

Quantity shipped offsite: _____ _____
(unit of measure)

NOTICE: If the film image is less clear than this notice, it is due to the quality of the document being filmed

MW2F 006

0109

2.20 **What was the INITIAL DESTINATION of the special waste shipped offsite for treatment or disposal in 1988?**
(Circle one number.)

01 Subtitle C treatment, storage, or disposal facility

02 Land disposal facility (not a Subtitle C facility)

03 Deep-well injection

04 Treatment/reclamation/recovery facility

05 Other *(specify)*: _____

_____

_____

06 Unknown *(SKIP TO QUESTION 2.23)*

2.21 **Does your company operate the facility identified in the previous question?**
(Circle one number.)

01 Yes *(SKIP TO QUESTION 2.23)*
02 No *(CONTINUE TO NEXT QUESTION)*

2.22 **What are the name, address, and telephone number of the facility identified in Question 2.20?**

Name: _____

Address : _____

City: _____ State or Country: _____ Zip: _____

Telephone number : ( ) _____

2.23 **Was any of the special waste generated by this processing unit DISCHARGED WITHOUT TREATMENT through permitted NPDES or state PDES outfalls or SENT WITHOUT TREATMENT to a POTW in 1988?**
(Circle one number. See the Instructions and Definitions booklet for definitions of NPDES, PDES, and POTW if these acronyms are unfamiliar.)

01 Yes *(CONTINUE TO NEXT QUESTION)*
02 No *(SKIP TO QUESTION 2.25 ON NEXT PAGE)* * See facility data

NOTICE: If the film image is less clear than this notice, it is due to the quality of the document being filmed

MW2F 006

2.24 **How much of the special waste was discharged without treatment through permitted NPDES or state PDES outfalls or sent without treatment to a POTW in 1988?**
(Report the quantity as generated using one of the two specified units of measure.)

_____ gallons OR _____ acre-feet

2.25 **Was any of the special waste generated by this processing unit SENT TO one or more ONSITE processing or waste management units in 1988?**
(Circle one number.)

01 Yes *(CONTINUE TO NEXT QUESTION)*
02 No *(SKIP TO QUESTION 2.27 ON PAGE 2-11)*

NOTICE: If the film image is less clear than this notice, it is due to the quality of the document being filmed

MW2F 006

2.26 How much of the special waste was INITIALLY SENT to each of the following ONSITE destinations in 1988?

(Report the quantities as generated and be sure to indicate the unit of measure for the quantities. For each onsite destination that did not receive the special waste, enter "0" for the quantity.)

Initial Onsite Destination	Quantity in 1988	Unit of Measure
a. Recycled without treatment to the same processing unit	0	~~gallons~~ 94
b. Sent without treatment to other onsite processing units: *(Indicate which units using the labels on the schematic prepared for Section 1.)*		
Phosphoric Acid Plant *	31,127,840	~~gallons~~ 24
c. Sent to onsite waste management units: *(Indicate which units using the labels on the schematic prepared for Section 1.)*		
Phosphogypsum Waste *	[redacted]	
Management Site		
	* see facility note	
d. Other *(specify)*:		

NOTICE: If the film image is less clear than this notice, it is due to the quality of the document being filmed

MW2F 006

0 1 1 2

2.27 **Which of the following source reduction and recycling practices were FIRST APPLIED to this processing unit in 1988?**
(Circle all numbers that apply. Do not include "downstream" source reduction and recycling practices in your answer.)

01 Equipment or technology modification/substitution

02 Process or procedure modification/substitution (including closed-loop recycling)

03 Reformulation or redesign of product

04 Modification/substitution of input or raw material

05 Better housekeeping, better operating practices

06 Waste stream segregation

07 Onsite recycling or recovery for reuse

08 Offsite recycling or recovery for reuse

09 Other *(specify)*: _____

_____

_____

10 None *(SKIP TO QUESTION 2.30 ON NEXT PAGE)*

2.28 **Briefly describe the source reduction and recycling practices that were FIRST APPLIED to this processing unit in 1988.**

_____

_____

_____

_____

_____

2.29 **Approximately how much in percentage terms did these NEW source reduction or recycling practices REDUCE the generation of the special waste in 1988 compared to the amount that would have been generated in the absence of these practices?**

Reduction in special waste generated: _____ percent

NOTICE: If the film image is less clear than this notice, it is due to the quality of the document being filmed

MW2F 006

0113

2.30 **In addition to generating a special waste, did this processing unit also RECEIVE a special waste in 1988?**
(Circle one number.)

(01) Yes *(CONTINUE TO NEXT QUESTION)*
02 No *(SKIP TO QUESTION 2.32 ON NEXT PAGE)*

2.31 **Which special waste(s) was (were) received by this processing unit and how much was received in 1988?**
(Report the quantities as generated and be sure to indicate the units of measure for these quantities.)

	Special Waste Received	Quantity in 1988	Unit of Measure
a.	* see facility note		
b.			
c.			
d.			
e.			
f.			
g.			

NOTICE: If the film image is less clear than this notice, it is due to the quality of the document being filmed

MW2F 006

0114

YOU HAVE COMPLETED THIS QUESTION SET

2.32 **Have you completed a question set on ALL processing units at this facility that generated a special waste in 1988?**
(Circle one number.)

1 Yes *(CONTINUE WITH QUESTION 2.33 ON PAGE 2-13 OF THE QUESTIONNAIRE BOOKLET)*

(2) No *(COMPLETE A QUESTION SET ON ONE OF THE REMAINING PROCESSING UNITS THAT GENERATED A SPECIAL WASTE IN 1988.)*

NOTICE: If the film image is less clear than this notice, it is due to the quality of the document being filmed

MW2F 006

0115

2.8 **What was the PRINCIPAL product (by volume) produced by this processing unit in 1988?**

Name of principal product: SO_2 gas

2.9 **How much of the principal product did this processing unit produce in 1988?**
(Report the quantity as generated.)

Quantity produced: 20 short tons

2.10 **What OTHER products (EXCLUDING THE SPECIAL WASTE) were produced by this processing unit and how much was produced in 1988?**
(Report the quantities as generated.)

Other Product	Quantity in 1988
a. Synthetic Aggregates	78 short tons
b.	short tons
c.	short tons
d.	short tons
e.	short tons
f.	short tons
g.	short tons
h.	short tons

2.11 **How much of the special waste did this processing unit generate in 1988?**
(Report the quantity as generated and be sure to indicate the unit of measure for this quantity.)

Quantity generated: 576,000 Gallons 24
(unit of measure)

NOTICE: If the film image is less clear than this notice, it is due to the quality of the document being filmed

MW2F 006

0 1 1 6

QUESTION SET FOR A PROCESSING UNIT GENERATING A SPECIAL WASTE

Answer Questions 2.2 through 2.32 for each processing unit that generated a special waste in 1988. The special wastes are listed on page 2-1 of the Questionnaire booklet. The processing unit must be shown on the schematic prepared for Section 1. Call the SURVEY HELPLINE (1-800-635-8850) for further instructions if a processing unit generated more than one special waste.

2.2 Which processing unit is the subject of this question set?

(Use the label on the schematic prepared for Section 1 to identify this processing unit.)

Label on processing unit: Re-use Phosphogypsum Pilot Plant*

*see facility note

2.3 Which special waste did this processing unit generate in 1988?

(The special wastes are listed on page 2-1 of the Questionnaire booklet.)

Name of special waste : Scrubber blowdown

2.4 What calendar year was this processing unit first operational?

Year: 1988

2.5 What calendar year was this processing unit last rebuilt or modernized?

(See the Instructions and Definitions booklet for definitions of "rebuilt" and "modernized.")

Year: 1988

2.6 What was the DAILY maximum practical operating capacity of this processing unit in 1988?

(Express your answer in terms of this processing unit's principal product by volume.)

10 short tons/day

2.7 How many days in 1988 was this processing unit in operation?

(Count partial days that the unit was in operation as whole days. For example, if the unit was in operation for half a day on 4 different days, count this as 4 full days.)

15 operating days

NOTICE: If the film image is less clear than this notice, it is due to the quality of the document being filmed

MW2F 006

0117

2.15 What were the other characteristics of this special waste in 1988?

*(Provide a composition code from Appendix A in the **Instructions and Definitions** booklet and an average concentration for the parameters and/or constituents that characterize this special waste. Be sure to indicate the unit of measure applying to the average concentration. The basis for your answer to this question may be either test results or general knowledge of the special waste. YOU DO NOT HAVE TO CONDUCT ADDITIONAL TESTING TO RESPOND TO THIS QUESTION.)*

	Waste Composition Code	Average Concentration	Unit of Measure for Average Concentration
a.	* See facility note		
b.			
c.			
d.			
e.			
f.			
g.			
h.			
i.			
j.			
k.			
l.			
m.			
n.			
o.			

NOTICE: If the film image is less clear than this notice, it is due to the quality of the document being filmed

MW2F 006

0 1 1 8

2.12 **Was this special waste a solid as it came out of the processing unit?**
(Circle one number.)

01 Yes *(CONTINUE TO NEXT QUESTION)*
(02) No *(SKIP TO QUESTION 2.14)*

2.13 **Which of the following categories best describes the typical size of the special waste at the point of generation?**
(Circle one number.)

01 Smaller than sand (less than .02 mm in diameter)

02 Sand (between .02mm and 2 mm in diameter)

03 Gravel (between 2 mm and 3" in diameter)

04 Cobble (between 3" and 12" in diameter)

05 Boulder (greater than 12" in diameter)

SKIP TO QUESTION 2.15 ON NEXT PAGE

2.14 **What were the pH and total solids content of this special waste in 1988?**
(Select one of the two specified units of measure for total solids content.)

a. pH: 2.5 S.U.

b. Total solids content: 0.4 % OR _____ ppm

NOTICE: If the film image is less clear than this notice, it is due to the quality of the document being filmed

MW2F 006

0119

2.20 **What was the INITIAL DESTINATION of the special waste shipped offsite for treatment or disposal in 1988?**
(Circle one number.)

01 Subtitle C treatment, storage, or disposal facility

02 Land disposal facility (not a Subtitle C facility)

03 Deep-well injection

04 Treatment/reclamation/recovery facility

05 Other *(specify)*: _____

_____

_____

06 Unknown *(SKIP TO QUESTION 2.23)*

2.21 **Does your company operate the facility identified in the previous question?**
(Circle one number.)

01 Yes *(SKIP TO QUESTION 2.23)*
02 No *(CONTINUE TO NEXT QUESTION)*

2.22 **What are the name, address, and telephone number of the facility identified in Question 2.20?**

Name: _____

Address : _____

City: _____ State or Country: _____ Zip: _____

Telephone number : ( ) _____

2.23 **Was any of the special waste generated by this processing unit DISCHARGED WITHOUT TREATMENT through permitted NPDES or state PDES outfalls or SENT WITHOUT TREATMENT to a POTW in 1988?**
(Circle one number. See the Instructions and Definitions booklet for definitions of NPDES, PDES, and POTW if these acronyms are unfamiliar.)

01 Yes *(CONTINUE TO NEXT QUESTION)*
02 No *(SKIP TO QUESTION 2.25 ON NEXT PAGE)*

NOTICE: If the film image is less clear than this notice, it is due to the quality of the document being filmed

MW2F 006

0120

2.16 **Was any of the special waste generated by this processing unit SOLD without onsite modification in 1988?**
(Circle one number.)

01 Yes *(CONTINUE TO NEXT QUESTION)*
02 No *(SKIP TO QUESTION 2.18)*

2.17 **How much of the special waste was sold in 1988 without onsite modification?**
(Report the quantity as generated and be sure to indicate the unit of measure for this quantity.)

Quantity sold: _____ _____
(unit of measure)

2.18 **Was any of the special waste generated by this processing unit SHIPPED OFFSITE for treatment or disposal in 1988 without onsite modification?**
(Circle one number.)

01 Yes *(CONTINUE TO NEXT QUESTION)*
02 No *(SKIP TO QUESTION 2.23 ON NEXT PAGE)*

2.19 **How much of the special waste was shipped offsite for treatment or disposal in 1988 without onsite modification?**
(Report the quantity as generated and be sure to indicate the unit of measure for this quantity.)

Quantity shipped offsite: _____ _____
(unit of measure)

NOTICE: If the film image is less clear than this notice, it is due to the quality of the document being filmed

MW2F 006

0121

2.26 How much of the special waste was INITIALLY SENT to each of the following ONSITE destinations in 1988?

(Report the quantities as generated and be sure to indicate the unit of measure for the quantities. For each onsite destination that did not receive the special waste, enter "0" for the quantity.)

Initial Onsite Destination	Quantity in 1988	Unit of Measure
a. Recycled without treatment to the same processing unit	0	gallons 24
b. Sent without treatment to other onsite processing units: *(Indicate which units using the labels on the schematic prepared for Section 1.)*		
Phosphate Rock Grinding Plant	567,000	gallons 24
c. Sent to onsite waste management units: *(Indicate which units using the labels on the schematic prepared for Section 1.)*		
d. Other *(specify)*:		

NOTICE: If the film image is less clear than this notice, it is due to the quality of the document being filmed

MW2F 006

0122

2.24 **How much of the special waste was discharged without treatment through permitted NPDES or state PDES outfalls or sent without treatment to a POTW in 1988?**
(Report the quantity as generated using one of the two specified units of measure.)

_____ gallons OR _____ acre-feet

2.25 **Was any of the special waste generated by this processing unit SENT TO one or more ONSITE processing or waste management units in 1988?**
(Circle one number.)

01 Yes *(CONTINUE TO NEXT QUESTION)*
02 No *(SKIP TO QUESTION 2.27 ON PAGE 2-11)*

NOTICE: If the film image is less clear than this notice, it is due to the quality of the document being filmed
MW2F 006
0123

2.30 **In addition to generating a special waste, did this processing unit also RECEIVE a special waste in 1988?**

(Circle one number.)

(01) Yes *(CONTINUE TO NEXT QUESTION)*

02 No *(SKIP TO QUESTION 2.32 ON NEXT PAGE)*

2.31 **Which special waste(s) was (were) received by this processing unit and how much was received in 1988?**

(Report the quantities as generated and be sure to indicate the units of measure for these quantities.)

Special Waste Received	Quantity in 1988	Unit of Measure
a. phosphogypsum	78	~~tons~~ 3.2
b.		
c.		
d.		
e.		
f.		
g.		

NOTICE: If the film image is less clear than this notice, it is due to the quality of the document being filmed

MW2F 006

0124

NOTICE: If the film image is less clear than this notice, it is due to the quality of the document being filmed

2.27 **Which of the following source reduction and recycling practices were FIRST APPLIED to this processing unit in 1988?**
(Circle all numbers that apply. Do not include "downstream" source reduction and recycling practices in your answer.)

01 Equipment or technology modification/substitution

02 Process or procedure modification/substitution (including closed-loop recycling)

03 Reformulation or redesign of product

04 Modification/substitution of input or raw material

05 Better housekeeping, better operating practices

06 Waste stream segregation

07 Onsite recycling or recovery for reuse

08 Offsite recycling or recovery for reuse

09 Other *(specify)*: _____

10 None *(SKIP TO QUESTION 2.30 ON NEXT PAGE)*

2.28 **Briefly describe the source reduction and recycling practices that were FIRST APPLIED to this processing unit in 1988.**

The Scrubber blowdown generated in this process is totally consumed in the phosphate rock grinding plant

2.29 **Approximately how much in percentage terms did these NEW source reduction or recycling practices REDUCE the generation of the special waste in 1988 compared to the amount that would have been generated in the absence of these practices?**

Reduction in special waste generated: 100 * percent

* See facility note

MW2F 006

0125

YOU HAVE COMPLETED THIS QUESTION SET

2.32 **Have you completed a question set on ALL processing units at this facility that generated a special waste in 1988?**
(Circle one number.)

(1) Yes *(CONTINUE WITH QUESTION 2.33 ON PAGE 2-13 OF THE QUESTIONNAIRE BOOKLET)*

2 No *(COMPLETE A QUESTION SET ON ONE OF THE REMAINING PROCESSING UNITS THAT GENERATED A SPECIAL WASTE IN 1988.)*

NOTICE: If the film image is less clear than this notice, it is due to the quality of the document being filmed

MW2F 006

0126

2.36 Briefly describe these planned changes in the facility's processing units and their anticipated effect on the quantity or characteristics of the special wastes.

NOTICE: If the film image is less clear than this notice, it is due to the quality of the document being filmed

MW2F 006

0127

The previous questions in this section obtained *1988 information* on the processing unit(s) that generated special wastes. The remaining questions in this section shift the focus to *1989 or planned future changes* in processing units that have affected or will affect the quantity or characteristics of the special wastes generated by this facility.

2.33 Have there been any changes in this facility's processing units *in 1989* that have affected the quantity or characteristics of the special wastes generated by this facility?

(Circle one number.)

01 Yes *(CONTINUE TO NEXT QUESTION)*
(02) No *(SKIP TO QUESTION 2.35)*

2.34 Briefly describe these 1989 changes in the facility's processing units and their effect on the quantity or characteristics of the special wastes.

_____

_____

_____

_____

_____

2.35 Are any changes planned in this facility's processing units in *calendar years 1989 through 1993* that would affect the quantity or characteristics of the special wastes generated by this facility?

(Circle one number.)

01 Yes *(CONTINUE TO NEXT QUESTION)*
(02) No *(SKIP TO SECTION 3)*

NOTICE: If the film image is less clear than this notice, it is due to the quality of the document being filmed

MW2F 006

0128

QUESTION SET FOR A PROCESSING UNIT GENERATING A SPECIAL WASTE

Answer Questions 2.2 through 2.32 for each processing unit that generated a special waste in 1988. The special wastes are listed on page 2-1 of the Questionnaire booklet. The processing unit must be shown on the schematic prepared for Section 1. Call the SURVEY HELPLINE (1-800-635-8850) for further instructions if a processing unit generated more than one special waste.

2.2 Which processing unit is the subject of this question set?

(Use the label on the schematic prepared for Section 1 to identify this processing unit.)

Label on processing unit: Uranium Recovery Plant

2.3 Which special waste did this processing unit generate in 1988?

(The special wastes are listed on page 2-1 of the Questionnaire booklet.)

Name of special waste : Process Waste Water *

* See facility note

2.4 What calendar year was this processing unit first operational?

Year: 1978

2.5 What calendar year was this processing unit last rebuilt or modernized?

(See the Instructions and Definitions booklet for definitions of "rebuilt" and "modernized.")

Year: 1978

2.6 What was the DAILY maximum practical operating capacity of this processing unit in 1988?

(Express your answer in terms of this processing unit's principal product by volume.)

2.0 short tons/day

2.7 How many days in 1988 was this processing unit in operation?

(Count partial days that the unit was in operation as whole days. For example, if the unit was in operation for half a day on 4 different days, count this as 4 full days.)

340 operating days

NOTICE: If the film image is less clear than this notice, it is due to the quality of the document being filmed

MW2F 006

0129

2.8 **What was the PRINCIPAL product (by volume) produced by this processing unit in 1988?**

Name of principal product: Uranium Oxide

2.9 **How much of the principal product did this processing unit produce in 1988?**
(Report the quantity as generated.)

Quantity produced: 600 short tons

2.10 **What OTHER products (EXCLUDING THE SPECIAL WASTE) were produced by this processing unit and how much was produced in 1988?**
(Report the quantities as generated.)

Other Product	Quantity in 1988
a. None	short tons
b.	short tons
c.	short tons
d.	short tons
e.	short tons
f.	short tons
g.	short tons
h.	short tons

2.11 **How much of the special waste did this processing unit generate in 1988?**
(Report the quantity as generated and be sure to indicate the unit of measure for this quantity.)

Quantity generated: 31,127,840 * Gallons 24
(unit of measure)

* see facility note

NOTICE: If the film image is less clear than this notice, it is due to the quality of the document being filmed

MW2F 006

0130

SECTION 3

PROCESSING UNITS THAT RECEIVE A SPECIAL WASTE (OR ITS RESIDUE)

3.1 Did a processing unit at your facility RECEIVE a special waste (or its residue) in 1988?

(Circle one number. When answering this question, do not include any processing units for which you completed a question set in Section 2.)

01 Yes *(CONTINUE WITH THIS SECTION OF THE QUESTIONNAIRE)*
02 No *(SKIP TO SECTION 4)*

Section 3 contains a set of questions that you complete for EACH processing unit that RECEIVED a special waste (or its residue) in 1988. (These processing units must be shown on the schematic prepared for Section 1.) For example, if smelting slag from a reactor (which is a special waste) is sent to a slag concentrator to recover valuable constituents, then you complete a question set on the slag concentrator (the processing unit that received the special waste). If the tailings from the slag concentrator are sent to another processing unit for further recovery of valuable constituents, then you also complete a set of questions on this second processing unit that received a residue from a special waste. In summary, you complete a question set on EACH processing unit that received a special waste (or its residue) in 1988. Do not complete a question set in this section on a processing unit for which you completed a question set in Section 2. Also, do not complete a question set on processing units that are now permanently closed.

Only one question set is provided in this section of the questionnaire. One more question set is provided in the *Extra Question Sets* booklet. If your facility had more than two processing units that received a special waste (or its residue) in 1988, please make as many additional copies of the extra Section 3 question set as needed.

If you are unsure about how many Section 3 question sets to complete for your facility, please call the SURVEY HELPLINE (1-800-635-8850).

For EPA use: /. /

NOTICE: If the film image is less clear than this notice, it is due to the quality of the document being filmed

MW2F 006

0131

QUESTION SET FOR A PROCESSING UNIT RECEIVING A SPECIAL WASTE

Answer Questions 3.2 through 3.38 for each processing unit that received a special waste (or its residue) in 1988. The special wastes are listed on page 2-1. The processing unit must be shown on the schematic prepared for Section 1.

3.2 Which processing unit is the subject of this question set?

(Use the label on the schematic prepared for Section 1 to identify this processing unit.)

Label on processing unit: Phosphoric Acid Plant (Phosphate Rock Grinding facility)

3.3 What calendar year was this processing unit first operational?

Year: 1968

3.4 What calendar year was this processing unit last rebuilt or modernized?

*(See the **Instructions and Definitions** booklet for definitions of "rebuilt" and "modernized.")*

Year: 1978

NOTICE: If the film image is less clear than this notice, it is due to the quality of the document being filmed
MW2F 006
0132

3.5 What were the MATERIAL INPUTS to is processing unit and what was the quantity of each input in 1988?

(Include special wastes, residues from spec l wastes, and intermediate mineral products, such as ore concentrate, in your answer. E sure to indicate the units of measure for the quantities.)

	Material Input	Qu	ntity in 1988	Unit of Measure
a.	Phosphate Rock	2,	00,000	~~TONS~~ 32
b.	Process Waste Water	3	613,120	~~gallons~~ 24
c.	Scrubber blowdown		67,000	~~gallons~~ 24
d.	Fresh water	216	884,676	~~gallons~~ 24
e.				
f.				
g.				
h.				

3.6 What was the DAILY maximum practic operating capacity of this processing unit in 1988?

(Express your answer in terms of this proc sing unit's principal product by volume.)

5,000 * short tons/day

* See facility note

3.7 How many days in 1988 was this process g unit in operation?

(Count partial days that the unit was in op ation as whole days. For example, if the unit was in operation for half a day on 4 differe t days, count this as 4 full days.)

298 operating days

3.8 What was the PRINCIPAL PRODUCT y volume) produced by this processing unit in 1988?

Name of principal product: Ground Phosphate Rock

NOTICE: If the film image is less clear than this notice, it is due to the quality of the document being filmed

MW2F 006

0133

3.9 How much of the princip product was produced by this processing unit in 1988?

(Report the quantity as gen ated.)

Quantity produced: 2,9 0,000 short tons

3.10 Did this processing unit p duce any BY-PRODUCTS (EXCLUDING RESIDUES) in 1988?

(Circle one number. By-pr ucts are secondary products that are usually sold, sometimes after undergoin urther processing. Residues are waste-like materials that often have little or no mark value. Although residues may undergo further processing to recover valuable constit nts, all or a portion of residues are often sent directly to waste management units.)

01 Yes *(CONTINUE TO EXT QUESTION)*

(02) No *(SKIP TO QUES ON 3.12 ON NEXT PAGE)*

3.11 What by-products (exclu g residues) were produced by this processing unit and how much was produced i 1988?

(Report the quantities as pr luced and be sure to indicate the units of measure for the quantities.)

By-Product	Quantity in 1988	Unit of Measure
a.		
b.		
c.		
d.		
e.		
f.		
g.		
h.		

NOTICE: If the film image is less clear than this notice, it is due to the quality of the document being filmed

MW2F 006

0134

3.12 What RESIDUE(S) was (were) generated by this processing unit and how much was generated in 1988?

(Report the quantities as generated and be sure to indicate the units of measure for the quantities.)

	Residue	Quantity in 1988	Unit of Measure
a.	None *	* See facility note	
b.			
c.			
d.			
e.			
f.			

NOTICE: If the film image is less clear than this notice, it is due to the quality of the document being filmed

MW2F 006

0135

3.17 What were the other characteristics of the liquid residue generated by this processing unit in 1988?

(Provide a composition code from Appendix A in the ***Instructions and Definitions*** *booklet and an average concentration for the parameters and/or constituents that characterize this liquid residue. Be sure to indicate the unit of measure applying to the average concentration. The basis for your answer to this question may be either test results or general knowledge of the liquid residue. YOU DO NOT HAVE TO CONDUCT ADDITIONAL TESTING TO RESPOND TO THIS QUESTION.)*

	Waste Composition Code	Average Concentration	Unit of Measure for Average Concentration
a.			
b.			
c.			
d.			
e.			
f.			
g.			
h.			
i.			
j.			
k.			
l.			
m.			

NOTICE: If the film image is less clear than this notice, it is due to the quality of the document being filmed

MW2F 006

0136

NOTICE: If the film image is less clear than this notice, it is due to the quality of the document being filmed

The remainder of this question set focuses on the management of the RESIDUE(S) generated by this processing unit in 1988. If the distinction between by-products and residues from this processing unit is unclear, call the SURVEY HELPLINE (1-800-635-8850).

3.13 Did this processing unit generate a LIQUID RESIDUE in 1988?
(Circle one number.)

01 Yes *(CONTINUE TO NEXT QUESTION)*
02 No *(SKIP TO QUESTION 3.19 ON PAGE 3-10)* * * see facility note

3.14 How much liquid residue was generated by this processing unit in 1988?
(Report the quantity as generated using one of the two specified units of measure.)

Quantity generated: _____ gallons **OR** _____ acre-feet

3.15 Was ALL of this liquid residue discharged without treatment through permitted NPDES or state PDES outfalls and/or sent without treatment to a POTW in 1988?
*(Circle one number. See the **Instructions and Definitions** booklet for definitions of NPDES, PDES, and POTW if these acronyms are unfamiliar.)*

01 Yes *(SKIP TO QUESTION 3.19 ON PAGE 3-10)*
02 No *(CONTINUE TO NEXT QUESTION)*

3.16 What were the pH and total solids content of the liquid residue generated by this processing unit in 1988?
(Select one of the two specified units of measure for total solids content.)

a. pH: _____ S.U.

b. Total solids content: _____ % **OR** _____ ppm

MW2F 006
0137

5.40 What is the general direction of the nearest residence from this surface impoundment?

(Circle one number.)

01 North

02 Northeast

03 East

04 Southeast

05 South

06 Southwest

07 West

08 Northwest

5.41 Is there another surface impoundment at this facility that received a special waste (or its residue) in 1988?

(Circle one number.)

01 Yes *(COMPLETE A QUESTION SET FROM THE EXTRA QUESTION SETS BOOKLET ON THIS OTHER SURFACE IMPOUNDMENT)*

02 No *(CONTINUE TO PAGE 5-17)*

NOTICE: If the film image is less clear than this notice, it is due to the quality of the document being filmed

MW2F 006

0138

5.36 Did this surface impoundment have a leachate collection system in 1988?
(Circle one number.)

01 Yes *(CONTINUE TO NEXT QUESTION)*
02 No *(SKIP TO QUESTION 5.38)*

5.37 Does the facility periodically test the chemical composition of the leachate?
(Circle one number.)

01 Yes
02 No

5.38 Were any of the following practices being used on this surface impoundment on December 31, 1988?
(For each practice, circle 01 for Yes or 02 for No.)

Practice	Yes	No
a. Runon/runoff controls	01	02
b. Secondary leachate collection	01	02
c. Slurry walls	01	02
d. Other *(specify)*: _____		

5.39 What is the distance from this surface impoundment to the nearest residence outside the boundary of this facility?
(Select one of the two specified units of measure.)

_____ yards **OR** 1.0 miles

NOTICE: If the film image is less clear than this notice, it is due to the quality of the document being filmed

MW2F 006

0139

NOTICE: If the film image is less clear than this notice, it is due to the quality of the document being filmed

5.35 What quantity of sludges/solids removed from this surface impoundment was INITIALLY SENT to each of the following ONSITE destinations in 1988?

(Report the quantities as generated and be sure to indicate the units of measure for the quantities. For each onsite destination that did not receive any sludges/solids from this surface impoundment, enter "0" for the quantity.)

Initial Onsite Destination	Quantity in 1988	Unit of Measure
a. Sent without further treatment to onsite processing units: *(Indicate which units using the labels on the schematic prepared for Section 1.)*		
_____	_____	_____
_____	_____	_____
_____	_____	_____
_____	_____	_____
_____	_____	_____
b. Sent to other onsite waste management units: *(Indicate which units using the labels on the schematic prepared for Section 1.)*		
_____	_____	_____
_____	_____	_____
_____	_____	_____
_____	_____	_____
_____	_____	_____
c. Other *(specify)*:		
_____	_____	_____
_____	_____	_____
_____	_____	_____
_____	_____	_____

MW2F 006
0140

5.31 What was the INITIAL DESTINATION of the sludges/solids shipped offsite in 1988?

(Circle one number.)

01 Subtitle C treatment, storage, or disposal facility

02 Land disposal facility (not a Subtitle C facility)

03 Treatment/reclamation/recovery facility

04 Other *(specify)*: _____

_____

_____

_____

05 Unknown *(SKIP TO QUESTION 5.34)*

5.32 Does your company operate the facility identified in the previous question?

(Circle one number.)

01 Yes *(SKIP TO QUESTION 5.34)*

02 No *(CONTINUE TO NEXT QUESTION)*

5.33 What are the name, address, and telephone number of the facility identified in Question 5.30?

Name: _____

Address : _____

City: _____ State or Country: _____ Zip: _____

Telephone number : ( ) _____

5.34 Were any of the sludges/solids removed from this surface impoundment SENT TO one or more ONSITE processing or waste management units in 1988?

(Circle one number.)

01 Yes *(CONTINUE TO NEXT QUESTION)*

02 No *(SKIP TO QUESTION 5.36 ON PAGE 5-14)*

NOTICE: If the film image is less clear than this notice, it is due to the quality of the document being filmed

MW2F 006

0141

5.27 Were any of the sludges/solids removed from this surface impoundment SOLD in 1988 without further onsite modification?
(Circle one number.)

01 Yes *(CONTINUE TO NEXT QUESTION)*
02 No *(SKIP TO QUESTION 5.29)*

5.28 What quantity of sludges/solids was sold in 1988 without further onsite modification?
(Be sure to indicate the unit of measure for this quantity.)

Quantity sold: _____ _____
(unit of measure)

5.29 Were any of the sludges/solids removed from this surface impoundment SHIPPED OFFSITE for treatment or disposal in 1988 without further onsite modification?
(Circle one number.)

01 Yes *(CONTINUE TO NEXT QUESTION)*
02 No *(SKIP TO QUESTION 5.34 ON NEXT PAGE)*

5.30 What quantity of sludges/solids was shipped offsite for treatment or disposal in 1988 without further onsite modification?
(Be sure to indicate the unit of measure for this quantity.)

Quantity shipped offsite: _____ _____
(unit of measure)

NOTICE: If the film image is less clear than this notice, it is due to the quality of the document being filmed

MW2F 006

0142

5.26 What were the characteristics of the sludges/solids removed from this surface impoundment in 1988?

(Provide a composition code from Appendix A in the ***Instructions and Definitions*** *booklet and an average concentration for the parameters and/or constituents that characterize these sludges/solids. Be sure to indicate the unit of measure applying to the average concentration. The basis for your answer to this question may be either test results or general knowledge of the sludges/solids. YOU DO NOT HAVE TO CONDUCT ADDITIONAL TESTING TO RESPOND TO THIS QUESTION.)*

	Waste Composition Code	Average Concentration	Unit of Measure for Average Concentration
a.			
b.			
c.			
d.			
e.			
f.			
g.			
h.			
i.			
j.			
k.			
l.			
m.			
n.			

NOTICE: If the film image is less clear than this notice, it is due to the quality of the document being filmed

MW2F 006

0143

5.20 Were any accumulated SLUDGES/SOLIDS removed from this surface impoundment in 1988?

(Circle one number.)

01 Yes *(SKIP TO QUESTION 5.23)*

(02) No *(CONTINUE TO NEXT QUESTION)*

5.21 What calendar year were sludges/solids last removed from this surface impoundment?

Year sludges/solids last removed: unknown

5.22 What is the typical frequency of removing sludges/solids from this surface impoundment?

Frequency of sludge/solid removal: Once every unknown months

SKIP TO QUESTION 5.36 ON PAGE 5-14

5.23 How many times were sludges/solids removed from this surface impoundment in 1988?

Frequency of sludges/solids removal: _____ times in 1988

5.24 What quantity of sludges/solids was removed from this surface impoundment in 1988?

(Be sure to indicate the unit of measure for this quantity.)

Quantity of sludges/solids removed: _____ _____ (unit of measure)

5.25 What were the pH and total solids content of the sludges/solids removed from this surface impoundment in 1988?

(Select one of the two specified units of measure for total solids content.)

a. pH: _____ S.U.

b. Total solids content: _____ % **OR** _____ ppm

NOTICE: If the film image is less clear than this notice, it is due to the quality of the document being filmed

MW2F 006

0144

5.19 How much of the liquid removed from this surface impoundment was INITIALLY SENT to each of the following destinations in 1988?

(For each destination that did not receive any liquids from this surface impoundment, enter "0" for the quantity. See the ***Instructions and Definitions*** *booklet for definitions of NPDES, PDES, and POTW if these acronyms are unfamiliar.)*

Initial Destination	Quantity in 1988
a. Discharged under a NPDES or state PDES permit without further treatment	488,100,000 gallons
b. Discharged to a POTW without further treatment	0 gallons
c. Sent without further treatment to onsite processing units: *(Indicate which units using the labels on the schematic prepared for Section 1.)*	
Phosphoric Acid Plant	103,500,000 gallons
as make-up water into	gallons
the active pond System	gallons
	gallons
d. Sent to onsite waste management units: *(Indicate which units using the labels on the schematic prepared for Section 1.)*	
Waste water Treatment Plant	0 gallons
	gallons
	gallons
	gallons
e. Sent offsite for further treatment or disposal	0 gallons
f. Sold without further treatment for offsite use	0 gallons
g. Other *(specify)*:	
Evaporation	74,200,000 gallons
	gallons

NOTICE: If the film image is less clear than this notice, it is due to the quality of the document being filmed

MW2F 006

0145

5.18 What were the other characteristics of the liquid removed from this surface impoundment in 1988?

*(Provide a composition code from Appendix A in the **Instructions and Definitions** booklet and an average concentration for the parameters and/or constituents that characterize this liquid. Be sure to indicate the unit of measure applying to the average concentration. The basis for your answer to this question may be either test results or general knowledge of the liquid. YOU DO NOT HAVE TO CONDUCT ADDITIONAL TESTING TO RESPOND TO THIS QUESTION.)*

	Waste Composition Code	Average Concentration	Unit of Measure for Average Concentration
a.	W026	102	~~mg/l~~ 46
b.	W027 [redacted]	~~<0.05~~ [redacted]	~~mg/l~~ 46
c.	W028	0.72	~~mg/l~~ 46
d.	W029	0.10	~~mg/l~~ 46
e.	W030	0.03	~~mg/l~~ 46
f.	W032	0.21	~~mg/l~~ 46
g.	W033	0.51	~~mg/l~~ 46
h.	W035	0.17	~~mg/l~~ 46
i.	~~W037~~ [redacted]	~~<0.05~~ [redacted]	~~mg/l~~ 46
j.	W039	0.002	~~mg/l~~ 46
k.	W041	0.97	~~mg/l~~ 46
l.	W042 [redacted]	0.01 [redacted]	~~mg/l~~ 46
m.	~~W044~~ [redacted]	~~<0.01~~ [redacted]	~~mg/l~~ 46
n.	~~W046~~	~~<0.05~~	~~mg/l~~ 46

* Waste Composite Continue in Facility Note

NOTICE: If the film image is less clear than this notice, it is due to the quality of the document being filmed

MW2F 006

0146

5.12 Were any chemical reagents added to this surface impoundment in 1988?
(Circle one number.)

01 Yes *(CONTINUE TO NEXT QUESTION)*
02 No *(SKIP TO QUESTION 5.14)*

5.13 What chemical reagents were added to this surface impoundment in 1988?
(List each reagent in one of the spaces below.)

a. _____ d. _____
b. _____ e. _____
c. _____ f. _____

5.14 Were any LIQUIDS removed from this surface impoundment in 1988?
(Circle one number.)

01 Yes *(CONTINUE TO NEXT QUESTION)*
02 No *(SKIP TO QUESTION 5.20 ON PAGE 5-9)*

5.15 What quantity of liquids was removed from this surface impoundment in 1988?
(Select one of the two specified units of measure.)

Quantity of liquids removed: 665,800,000 gallons **OR** _____ acre-feet

5.16 Was ALL of the liquid removed from this surface impoundment directly discharged through permitted NPDES or state PDES outfalls and/or directly discharged to a POTW in 1988?
*(Circle one number. See the **Instructions and Definitions** booklet for definitions of NPDES, PDES, and POTW if these acronyms are unfamiliar.)*

01 Yes *(SKIP TO QUESTION 5.20 ON PAGE 5-9)*
02 No *(CONTINUE TO NEXT QUESTION)*

5.17 What were the pH and total solids content of the liquid removed from this surface impoundment in 1988?
(Select one of the two specified units of measure for total solids content.)

a. pH: 1.8 S.U.
b. Total solids content: 0.0017 % **OR** _____ ppm

NOTICE: If the film image is less clear than this notice, it is due to the quality of the document being filmed

MW2F 006

0147

5.9 Which of the following best describes the liner under this surface impoundme.
(Circle all numbers that apply.)

01 Bedrock

02 In-situ clay

03 Recompacted local clay

04 Asphalt

05 Concrete

06 Synthetic *(specify)*: _____

07 Other *(specify)*: _____

_____

08 No liner

5.10 Does this facility have a written closure plan for this surface impoundment that has been approved by the appropriate federal or state governmental agency?
(Circle one number.)

01 Yes
02 No

5.11 Which of the following treatment processes occurred in this surface impoundment in 1988?
(Circle all numbers that apply.)

01 Equalization

02 Solids precipitation

03 pH adjustment

04 Chemical treatment (other than pH adjustment)

05 Biological treatment

06 Dewatering

07 Other *(specify)*: _____

_____

_____

08 None *(SKIP TO QUESTION 5.14 ON NEXT PAGE)*

NOTICE: If the film image is less clear than this notice, it is due to the quality of the document being filmed

MW2F 006

0148

5.5 What was the approximate total amount of accumulated sludge/solids in this surface impoundment on December 31, 1988?

(Report the quantity in place and be sure to indicate the unit of measure for this quantity.)

Cumulative amount of sludge/solids: unknown * _____ (unit of measure)

* See facility note

5.6 Approximately how much of the total amount of accumulated sludge/solids in this surface impoundment on December 31, 1988 was ADDED DURING 1988?

(Report the quantity in place and be sure to indicate the unit of measure for this quantity.)

Quantity of 1988 sludge/solids: 73,683 * _____ lbs 31 (unit of measure)

* See facility note

5.7 What was the anticipated REMAINING USEFUL LIFE of this surface impoundment on December 31, 1988?

(If none, enter "0".)

Remaining useful life: 10 years

5.8 What were the dimensions of this surface impoundment on December 31, 1988?

(Select one of the two specified units of measure for each dimension.)

a. Depth: 4 feet **OR** _____ yards

b. Surface area of top: _____ square feet **OR** 110 acres

NOTICE: If the film image is less clear than this notice, it is due to the quality of the document being filmed

MW2F 006

0149

QUESTION SET FOR A SURFACE IMPOUNDMENT

Answer Questions 5.2 through 5.41 for a surface impoundment that received a special waste (or its residue) in 1988. The special wastes are listed on page 2-1. The surface impoundments must be shown on the schematic prepared for Section 1.

5.2 Which surface impoundment is the subject of this question set?

(Use the label on the schematic prepared for Section 1 to identify this surface impoundment.)

Label on surface impoundment: Inactive Pond Water *

* Refer to facility note 1.22 for full explanation of Inactive Pond system.

5.3 What calendar year did this surface impoundment first receive a special waste (or its residue)?

Year: 1988

5.4 What were the INFLOWS to this surface impoundment and what was the quantity of each inflow in 1988?

(Include special wastes and residues of special wastes in addition to other inflows, if any, in your answer. Be sure to indicate the units of measure for these inflows.)

	Inflow	Quantity in 1988	Unit of Measure
a.	Rain Water Run off	519,700,000	Gallons 24
b.			
c.			
d.			
e.			
f.			
g.			
h.			

NOTICE: If the film image is less clear than this notice, it is due to the quality of the document being filmed
MW2F 006
0150

SECTION 5

SURFACE IMPOUNDMENTS THAT RECEIVE A SPECIAL WASTE (OR ITS RESIDUE)

5.1 Did a surface impoundment (including tailings ponds and lagoons) at this facility RECEIVE a special waste (or its residue) in 1988?

(Circle one number.)

(01) Yes *(CONTINUE WITH THIS SECTION OF THE QUESTIONNAIRE)*

02 No *(SKIP TO SECTION 6)*

Section 5 contains a set of questions that you complete for EACH surface impoundment that RECEIVED a special waste (or its residue) in 1988. (These surface impoundments must be shown on the schematic prepared for Section 1.) For example, if acid plant blowdown (a special waste) is sent to a tailings pond, then you complete a question set on the tailings pond (a surface impoundment that receives a special waste). Additionally, if your wastewater treatment plant receives a special waste (or its residue) and sludge from this wastewater treatment plant is sent to a sludge pond, then you also complete a set of questions on the sludge pond (a surface impoundment that receives the residue from a special waste). In summary, you complete a question set on EACH surface impoundment (including tailings ponds and lagoons) that received a special waste (or its residue) in 1988. However, do not complete a question set on surface impoundments that are now permanently closed.

Only one question set is provided in this section of the questionnaire. One more question set is provided in the *Extra Question Sets* booklet. If your facility had more than two surface impoundments that received a special waste (or its residue) in 1988, please make as many additional copies of the extra Section 5 question set as needed.

If you are unsure about how many Section 5 question sets to complete for your facility, please call the SURVEY HELPLINE (1-800-635-8850).

For EPA use: /

NOTICE: If the film image is less clear than this notice, it is due to the quality of the document being filmed

MW2F 006

0151

4.34 Briefly describe these planned changes in the facility's wastewater treatment plant(s) and their anticipated effect on the quantity or characteristics of the residues from the special wastes.

_____

_____

_____

_____

_____

NOTICE: If the film image is less clear than this notice, it is due to the quality of the document being filmed

MW2F 006

0152

The previous questions in this section obtained *1988 information* on the wastewater treatment plant(s) that received special wastes (or their residues). The remaining questions in this section shift the focus to *1989 or planned future changes* in the wastewater treatment plant(s) that have affected or will affect the quantity or characteristics of residues from special wastes generated by this facility.

4.31 Have there been any changes in this facility's wastewater treatment plant(s) *in 1989* that have affected the quantity or characteristics of the residues from the special wastes generated by this facility?

(Circle one number.)

01 Yes *(CONTINUE TO NEXT QUESTION)*

02 No *(SKIP TO QUESTION 4.33)*

4.32 Briefly describe these 1989 changes in the facility's wastewater treatment plant(s) and their effect on the quantity or characteristics of the residues from the special wastes.

_____

_____

_____

_____

_____

4.33 Are any changes planned in this facility's wastewater treatment plant(s) in *calendar years 1989 through 1993* that would affect the quantity or characteristics of the residues from the special wastes generated by this facility?

(Circle one number.)

01 Yes *(CONTINUE TO NEXT QUESTION)*

02 No *(SKIP TO SECTION 5)*

NOTE: If the film image is clearer than this, it is due to the quality of the document filmed

MW2F 006

0153

4.21 Were any of the sludge/solid outflows from this wastewater treatment plant SOLD in 1988 without further onsite modification?
(Circle one number.)

01 Yes *(CONTINUE TO NEXT QUESTION)*
02 No *(SKIP TO QUESTION 4.23)*

4.22 How much of the sludge/solid outflows was sold in 1988 without further onsite modification?
(Report the quantity as generated and be sure to indicate the unit of measure for this quantity.)

Quantity sold: _____ _____
(unit of measure)

4.23 Were any of the sludge/solid outflows from this wastewater treatment plant SHIPPED OFFSITE for treatment or disposal in 1988 without further onsite modification?
(Circle one number.)

01 Yes *(CONTINUE TO NEXT QUESTION)*
02 No *(SKIP TO QUESTION 4.28 ON NEXT PAGE)*

4.24 How much of the sludge/solid outflows was shipped offsite for treatment or disposal in 1988 without further onsite modification?
(Report the quantity as generated and be sure to indicate the unit of measure for this quantity.)

Quantity shipped offsite: _____ _____
(unit of measure)

NOTICE: If the film image is less clear than this notice, it is due to the quality of the document being filmed

MW2F 006

0154

4.20 What were the other characteristics of the sludge/solid outflows from this wastewater treatment plant in 1988?

*(Provide a composition code from Appendix A in the **Instructions and Definitions** booklet and an average concentration for the parameters and/or constituents that characterize the sludge/solid outflows. Be sure to indicate the unit of measure applying to the average concentration. The basis for your answer to this question may be either test results or general knowledge of the sludge/solid outflows. YOU DO NOT HAVE TO CONDUCT ADDITIONAL TESTING TO RESPOND TO THIS QUESTION.)*

	Waste Composition Code	Average Concentration	Unit of Measure for Average Concentration
a.			
b.			
c.			
d.			
e.			
f.			
g.			
h.			
i.			
j.			
k.			
l.			
m.			
n.			

NOTICE: If the film image is less clear than this notice, it is due to the quality of the document being filmed

MW2F 006

0155

4.17 Were there any SLUDGE/SOLID OUTFLOWS from this wastewater treatment plant in 1988?

(Circle one number.)

01 Yes *(CONTINUE TO NEXT QUESTION)*

02 No *(SKIP TO QUESTION 4.30 ON PAGE 4-13)*

4.18 What was the quantity of sludge/solid outflows from this wastewater treatment plant in 1988?

(Report the quantity as generated and be sure to indicate the unit of measure for this quantity.)

Quantity: _____ _____
(unit of measure)

4.19 What were the pH and total solids content of the sludge/solid outflows in 1988?

(Select one of the two specified units of measure for total solids content.)

a. pH: _____ S.U.

b. Total solids content: _____ % **OR** _____ ppm

NOTICE: If the film image is less clear than this notice, it is due to the quality of the document being filmed

MW2F 006

0156

4.16 How much of the liquid outflows from this wastewater treatment plant was INITIALLY SENT to each of the following destinations in 1988?

(Report the quantities as generated. For each destination that did not receive any of the liquid outflows, enter "0" for the quantity. See the ***Instructions and Definitions*** *booklet for definitions of NPDES, PDES, and POTW if these acronyms are unfamiliar.)*

Initial Destination	Quantity in 1988
a. Discharged under a NPDES or state PDES permit without further treatment	_____ gallons
b. Discharged to a POTW without further treatment	_____ gallons
c. Sent without further treatment to onsite processing units: *(Indicate which units using the labels on the schematic prepared for Section 1.)*	
_____	_____ gallons
_____	_____ gallons
_____	_____ gallons
_____	_____ gallons
d. Sent to onsite waste management units: *(Indicate which units using the labels on the schematic prepared for Section 1.)*	
_____	_____ gallons
_____	_____ gallons
_____	_____ gallons
_____	_____ gallons
e. Sent offsite for further treatment or disposal	_____ gallons
f. Sold without further treatment for offsite use	_____ gallons
g. Other *(specify)*:	
_____	_____ gallons
_____	_____ gallons

NOTICE: If the film image is less clear than this notice, it is due to the quality of the document being filmed

MW2F 006

0157

4.15 What were the other characteristics of the liquid outflows from this wastewater treatment plant in 1988?

(Provide a composition code from Appendix A in the ***Instructions and Definitions*** *booklet and an average concentration for the parameters and/or constituents that characterize the liquid outflows. Be sure to indicate the unit of measure applying to the average concentration. The basis for your answer to this question may be either test results or general knowledge of the liquid outflows. YOU DO NOT HAVE TO CONDUCT ADDITIONAL TESTING TO RESPOND TO THIS QUESTION.)*

	Waste Composition Code	Average Concentration	Unit of Measure for Average Concentration
a.			
b.			
c.			
d.			
e.			
f.			
g.			
h.			
i.			
j.			
k.			
l.			
m.			
n.			

NOTICE: If the film image is less clear than this notice, it is due to the quality of the document being filmed

MW2F 006

0158

4.10 What chemical reagents were used in 1988?
(List each reagent in one of the spaces below.)

a. _____ e. _____

b. _____ f. _____

c. _____ g. _____

d. _____ h. _____

4.11 Were there any LIQUID OUTFLOWS from this wastewater treatment plant in 1988?
(Circle one number.)

01 Yes *(CONTINUE TO NEXT QUESTION)*
02 No *(SKIP TO QUESTION 4.17 ON PAGE 4-9)*

4.12 What was the quantity of the liquid outflows from this wastewater treatment plant in 1988?
(Report the quantity as generated using one of the two specified units of measure.)

Quantity of liquid outflows: _____ gallons **OR** _____ acre-feet

4.13 Were ALL of the liquid outflows from this wastewater treatment plant directly discharged through permitted NPDES or state PDES outfalls and/or directly discharged to a POTW in 1988?
(Circle one number. See the Instructions and Definitions booklet for definitions of NPDES, PDES, and POTW if these acronyms are unfamiliar.)

01 Yes *(SKIP TO QUESTION 4.17 ON PAGE 4-9)*
02 No *(CONTINUE TO NEXT QUESTION)*

4.14 What were the typical pH and total solids content of the liquid outflows in 1988?
(Select one of the two specified units of measure for total solids content.)

a. pH: _____ S.U.

b. Total solids content: _____ % **OR** _____ ppm

NOTICE: If the film image is less clear than this notice, it is due to the quality of the document being filmed

MW2F 006

0159

4.8 Which of the following treatment processes were part of this wastewater treatment plant in 1988?

(Circle the number for all treatment processes that apply.)

01 Equalization

02 Clarification/flotation

03 Blending

04 Physical filtration

05 pH adjustment

06 Chemical treatment (other than pH adjustment)

07 Adsorption/ion exchange

08 Stripping

09 Biological treatment

10 Dewatering

11 Other *(specify)*: _____

_____

_____

4.9 Were any chemical reagents used in the treatment processes in this wastewater treatment plant in 1988?

(Circle one number.)

1 Yes *(CONTINUE TO NEXT QUESTION)*

2 No *(SKIP TO QUESTION 4.11 ON NEXT PAGE)*

NOTICE: If the film image is less clear than this notice, it is due to the quality of the document being filmed

MW2F 006

0160

4.5 What were the INFLOWS to this wastewater treatment plant and what was the quantity of each inflow in 1988?
(Include special wastes and residues from special wastes in addition to other inflows, if any, in your answer.)

Inflow	Quantity in 1988
a. _____	_____ gallons
b. _____	_____ gallons
c. _____	_____ gallons
d. _____	_____ gallons
e. _____	_____ gallons
f. _____	_____ gallons
g. _____	_____ gallons
h. _____	_____ gallons
i. _____	_____ gallons
j. _____	_____ gallons

4.6 What was the DAILY maximum practical operating capacity of this wastewater treatment plant in 1988?

_____ gallons/day

4.7 How many days in 1988 was this wastewater treatment plant in operation?
(Count partial days that the plant was in operation as whole days. For example, if the plant was in operation for half a day on 4 different days, count this as 4 full days.)

_____ operating days

NOTICE: If the film image is less clear than this notice, it is due to the quality of the document being filmed

MW2F 006

0 1 b 1

QUESTION SET FOR A WASTEWATER TREATMENT PLANT

Answer Questions 4.2 through 4.30 for a wastewater treatment plant that received a special waste (or its residue) in 1988. The special wastes are listed on page 2-1. The wastewater treatment plant must be shown on the schematic prepared for Section 1.

4.2 Which wastewater treatment plant is the subject of this question set?

(Use the label on the schematic prepared for Section 1 to identify this wastewater treatment plant.)

Label on wastewater treatment plant: _____

4.3 What calendar year was this wastewater treatment plant first operational?

Year: _____

4.4 What calendar year was this wastewater treatment plant last rebuilt or modernized?

*(See the **Instructions and Definitions** booklet for definitions of "rebuilt" and "modernized.")*

Year: _____

NOTICE: If the film image is less clear than this notice, it is due to the quality of the document being filmed

MW2F 006

0162

SECTION 4

WASTEWATER TREATMENT PLANTS THAT RECEIVE A SPECIAL WASTE (OR ITS RESIDUE)

4.1 Did a wastewater treatment plant at the facility RECEIVE a special waste (or its residue) in 1988?
(Circle one number.)

01 Yes *(CONTINUE WITH THIS SECTION OF THE QUESTIONNAIRE)*
02 No *(SKIP TO SECTION 5)*

Section 4 contains a set of questions that you complete for EACH wastewater treatment plant that received a special waste (or its residue) in 1988. For example, if you have two wastewater treatment plants that received a special waste (or its residue) in 1988, then you complete a question set on EACH of these plants. However, if you have a wastewater treatment plant that received two or more special wastes (or their residues), you need only complete one question set for that wastewater treatment plant. Do not complete a question set on wastewater treatment plants that are now permanently closed.

Only one question set is provided in this section of the questionnaire. One more question set is provided in the *Extra Question Sets* booklet. If your facility had more than two wastewater treatment plants that received a special waste (or its residue) in 1988, please make as many additional copies of the extra Section 4 question set as needed.

If you are unsure about how many Section 4 question sets to complete for your facility, please call the SURVEY HELPLINE (1-800-635-8850).

For EPA use:

NOTICE: If the film image is less clear than this notice, it is due to the quality of the document being filmed

MW2F 006

0163

3.42 **Briefly describe these planned changes in the facility's processing units and their anticipated effect on the quantity or characteristics of the residues from the special wastes.**

NOTICE: If the film image is less clear than this notice, it is due to the quality of the document being filmed

MW2F 006

0164

The previous questions in this section obtained *1988 information* on the processing unit(s) that received special wastes. The remaining questions in this section shift the focus to *1989 or planned future changes* in processing units that have affected or will affect the quantity or characteristics of residues from special wastes generated by this facility.

3.39 Have there been any changes in this facility's processing units *in 1989* that have affected the quantity or characteristics of the residues from the special wastes generated by this facility?
(Circle one number.)

01 Yes *(CONTINUE TO NEXT QUESTION)*
02 No *(SKIP TO QUESTION 3.41)*

3.40 Briefly describe these 1989 changes in the facility's processing units and their effect on the quantity or characteristics of the residues from the special wastes.

_____

_____

_____

_____

_____

3.41 Are any changes planned in this facility's processing units in *calendar years 1989 through 1993* that would affect the quantity or characteristics of the residues from the special wastes generated by this facility?
(Circle one number.)

01 Yes *(CONTINUE TO NEXT QUESTION)*
02 No *(SKIP TO SECTION 4)*

NOTICE: If the film image is less clear than this notice, it is due to the quality of the document being filmed

MW2F 006

0165

National Survey of Solid Wastes from Mineral Processing Facilities

ANSWERS CONTAINING CONFIDENTIAL BUSINESS INFORMATION

ALL

NONE

1.1	☐	2.1	☐			3.1	☐		
1.2	☐	2.2	☐	2.28	☐	3.2	☐	3.28	☐
1.3	☐	2.3	☐	2.29	☐	3.3	☐	3.29	☐
1.4	☐	2.4	☐	2.30	☐	3.4	☐	3.30	☐
1.5	☐	2.5	☐	2.31	☐	3.5	☐	3.31	☐
1.6	☐	2.6	☐	2.32	☐	3.6	☐	3.32	☐
1.7	☐	2.7	☐	2.33	☐	3.7	☐	3.33	☐
1.8	☐	2.8	☐	2.34	☐	3.8	☐	3.34	☐
1.9	☐	2.9	☐	2.35	☐	3.9	☐	3.35	☐
1.10	☐	2.10	☐	2.36	☐	3.10	☐	3.36	☐
1.11	☐	2.11	☐			3.11	☐	3.37	☐
1.12	☐	2.12	☐			3.12	☐	3.38	☐
1.13	☐	2.13	☐			3.13	☐	3.39	☐
1.14	☐	2.14	☐			3.14	☐	3.40	☐
1.15	☐	2.15	☐			3.15	☐	3.41	☐
1.16	☐	2.16	☐			3.16	☐	3.42	☐
1.17	☐	2.17	☐			3.17	☐		
1.18	☐	2.18	☐			3.18	☐		
1.19	☐	2.19	☐			3.19	☐		
1.20	☐	2.20	☐			3.20	☐		
1.21	☐	2.21	☐			3.21	☐		
1.22	☐	2.22	☐			3.22	☐		
1.23	☐	2.23	☐			3.23	☐		
1.24	☐	2.24	☐			3.24	☐		
1.25	☐	2.25	☐			3.25	☐		
1.26	☐	2.26	☐			3.26	☐		
		2.27	☐			3.27	☐		

NOTICE: If the film image is less clear than this notice, it is due to the quality of the document being filmed

MW2F 006

0 1 b b

PA 045

FACILITY NOTES

Environmental Monitoring Near Waste Management Units

7.1 The upper most USABLE aquifer underlying at the special waste
7.2 management unit is known and the "GRAMERCY", which is typically 180 feet below the land surface. In Louisiana, our monitoring wells typically varied form 30-90 feet deep. The water we sampled and analyzed are known as discontinous sand/silt units located generally between 30 and 45 feet below land surface. This is usually referred to as the shallow zone. The deep zone is located generally below 70 feet below land surface. It is also a discontinuous sand/silt unit. The water in these units (shallow and deep zones) are not used primarily for drinking because of its hardness and sometimes its salinity. In reference to Question 7.1 and 7.2, we obtained the required information through a literature published by the U.S.G.S. entitled "Ground Water Resources of the Gramercy Area in Louisiana, Technical Report #24."

Since we do not sample the Gramercy aquifer, we have no data on the typical depth of this aquifer during the highest and lowest season. The level we reported are the depths of the water table (sand/silt units) that we monitored twice per year. Due to the close proximity of our facility to the Mississippi River, the depth of the water table fluctuates in accordance with the Mississippi River stages.

7.6 Refer to first part of 7.1 and 7.2.

7.7 Refer to 7.1 and 7.2.

7.8 Refer to 7.1 and 7.2. The Gramercy aquifer is too deep for our sampling.

7.18 The following parameters are used for the well water monitoring program:

pH, TSS, Dissolve Solids, P, F, SO_4, NaCl, TH as $CaCO_3$, Ca as $CaCO_3$, MO as $CaCO_3$.

NOTICE: If the film image is less clear than this notice, it is due to the quality of the document being filmed

MW2F 006

0167

PA 045

FACILITY NOTES

Phosphogypsum Waste Management Site

6.4a The term phosphogypsum includes associated solids and water resulting from the processing of phosphate rock.

The phosphogypsum generated is primarily Calcium Sulfate Di-Hydrate from the digestion of phosphate rock, but it may also include solids generated from the cleanout of tanks and process equipment and pollution control equipment. These solids are co-managed with the phosphogypsum. We are also alloved to dispose a small quantity of Iodine impregnated waste resin from the SiF_4 gas production plant. Waste generated by our re-use phosphogypsum Pilot Plant are also permitted to be disposed in the designated waste storage area. In fiscal July 1987 through July 1988, a total of 813 tons of process-related wastes were disposed at the gypsum management site.

6.24 The phosphogypsum pile does not have a leachate collection system, but it does have a seepage collecting ditch surrounding the facility. Due to a hydraulic head caused by water infiltration into the stack from rainfall and gypsum slurry water, there is a constant seepage from the side of the gypsum stack into this ditch. The seepage is contained within the levee system and is returned to the plant for reused.

6.26.d. Slurry walls only existed at south and southeast corner of the existing gypsum system.

NOTICE: If the film image is less clear than this notice, it is due to the quality of the document being filmed

MW2F 006

0168

3.37 **Approximately how much in percentage terms did these NEW source reduction or recycling practices REDUCE the generation of the residue from the special waste in 1988 compared to the amount that would have been generated in the absence of these practices?**

Reduction in residue generated: _____ percent

3.38 **Is there another processing unit at this facility that received a special waste (or its residue) in 1988?**
(Circle one number.)

01 Yes *(COMPLETE A QUESTION SET FROM THE EXTRA QUESTION SETS BOOKLET ON THIS OTHER PROCESSING UNIT)*

02 No *(CONTINUE TO PAGE 3-19)*

NOTICE: If the film image is less clear than this notice, it is due to the quality of the document being filmed

MW2F 006

0169

3.35 Which of the following source reduction and recycling practices were FIRST APPLIED to this processing unit in 1988?
(Circle all numbers that apply. Do not include "downstream" source reduction and recycling practices in your answer.)

01 Equipment or technology modification/substitution

02 Process or procedure modification/substitution (including closed-loop recycling)

03 Reformulation or redesign of product

04 Modification/substitution of input or raw material

05 Better housekeeping, better operating practices

06 Waste stream segregation

07 Onsite recycling or recovery for reuse

08 Offsite recycling or recovery for reuse

09 Other *(specify)*: _____

_____

_____

(10) None *(SKIP TO QUESTION 3.38 ON NEXT PAGE)*

3.36 Briefly describe the source reduction and recycling practices that were FIRST APPLIED to this processing unit in 1988.

_____

_____

_____

_____

_____

_____

NOTICE: If the film image is less clear than this notice, it is due to the quality of the document being filmed

MW2F 006

0170

3.34 **How much of the sludge/solid residue generated by this processing unit was INITIALLY SENT to each of the following ONSITE destinations in 1988?**

(Report the quantities as generated and be sure to indicate the units of measure for the quantities. For each onsite destination that did not receive any sludge/solid residue, enter "0" for the quantity.)

	Initial Onsite Destination	Quantity in 1988	Unit of Measure
a.	Recycled without treatment to the same processing unit		
b.	Sent to other onsite processing units (without treatment): *(Indicate which units using the labels on the schematic prepared for Section 1.)*		
c.	Sent to onsite waste management units: *(Indicate which units using the labels on the schematic prepared for Section 1.)*		
d.	Other *(specify)*:		

NOTICE: If the film image is less clear than this notice, it is due to the quality of the document being filmed

MW2F 006

3.30 What was the INITIAL DESTINATION of the sludge/solid residue shipped offsite for treatment or disposal in 1988?
(Circle one number.)

01 Subtitle C treatment, storage, or disposal facility

02 Land disposal facility (not a Subtitle C facility)

03 Deep-well injection

04 Treatment/reclamation/recovery facility

05 Other *(specify)*: _____

_____

_____

06 Unknown *(SKIP TO QUESTION 3.33)*

3.31 Does your company operate the facility identified in the previous question?
(Circle one number.)

01 Yes *(SKIP TO QUESTION 3.33)*
02 No *(CONTINUE TO NEXT QUESTION)*

3.32 What are the name, address, and telephone number of the facility identified in Question 3.30?

Name: _____

Address : _____

City: _____ State or Country: _____ Zip: _____

Telephone number : ( ) _____

3.33 Was any of the sludge/solid residue generated by this processing unit SENT TO one or more ONSITE processing or waste management units in 1988?
(Circle one number.)

01 Yes *(CONTINUE TO NEXT QUESTION)*
02 No *(SKIP TO QUESTION 3.35 ON PAGE 3-16)*

NOTICE: If the film image is less clear than this notice, it is due to the quality of the document being filmed

MW2F 006

0172

3.26 Was any of the sludge/solid residue generated by this processing unit SOLD without onsite modification in 1988?
(Circle one number.)

01 Yes *(CONTINUE TO NEXT QUESTION)*
02 No *(SKIP TO QUESTION 3.28)*

3.27 How much of the sludge/solid residue generated by this processing unit was sold in 1988 without onsite modification?
(Report the quantity as generated and be sure to indicate the unit of measure for this quantity.)

Quantity sold: _____ _____
(unit of measure)

3.28 Was any of the sludge/solid residue generated by this processing unit SHIPPED OFFSITE for treatment or disposal in 1988 without further onsite modification?
(Circle one number.)

01 Yes *(CONTINUE TO NEXT QUESTION)*
02 No *(SKIP TO QUESTION 3.33 ON NEXT PAGE)*

3.29 How much of the sludge/solid residue was shipped offsite for treatment or disposal in 1988 without further onsite modification?
(Report the quantity as generated and be sure to indicate the unit of measure for the quantity.)

Quantity shipped offsite: _____ _____
(unit of measure)

NOTICE: If the film image is less clear than this notice, it is due to the quality of the document being filmed
MW2F 006
0173

3.25 What were the other characteristics of the sludge/solid residue generated by this processing unit in 1988?

(Provide a composition code from Appendix A in the ***Instructions and Definitions*** *booklet and an average concentration for the parameters and/or constituents that characterize this sludge/solid residue. Be sure to indicate the unit of measure applying to the average concentration. The basis for your answer to this question may be either test results or general knowledge of the sludge/solid residue. YOU DO NOT HAVE TO CONDUCT ADDITIONAL TESTING TO RESPOND TO THIS QUESTION.)*

	Waste Composition Code	Average Concentration	Unit of Measure for Average Concentration
a.			
b.			
c.			
d.			
e.			
f.			
g.			
h.			
i.			
j.			
k.			
l.			
m.			
n.			

NOTICE: If the film image is less clear than this notice, it is due to the quality of the document being filmed

MW2F 006

0174

3.23 How much sludge residue did this processing unit generate in 1988?

(Report the quantity as generated and be sure to indicate the unit of measure for the quantity.)

Quantity generated: _____ _____
(unit of measure)

3.24 What were the pH and total solids content of this sludge residue in 1988?

(Select one of the two specified units of measure for total solids content.)

a. pH: _____ S.U.

b. Total solids content: _____ % **OR** _____ ppm

NOTICE: If the film image is less clear than this notice, it is due to the quality of the document being filmed

MW2F 006

0175

3.19 Did this processing unit generate a SOLID RESIDUE in 1988?
(Circle one number.)

01 Yes *(CONTINUE TO NEXT QUESTION)*
02 No *(SKIP TO QUESTION 3.22)*

Call the SURVEY HELPLINE (1-800-635-8850) for further instructions if this processing unit generated a solid residue AND a sludge residue in 1988.

3.20 How much solid residue did this processing unit generate in 1988?
(Report the quantity as generated.)

Quantity generated: _____ short tons

3.21 Which of the following categories best describes the typical size of the solid residue from this processing unit in 1988?
(Circle one number. Report the size as generated.)

01 Smaller than sand (less than .02 mm in diameter)

02 Sand (between .02mm and 2 mm in diameter)

03 Gravel (between 2 mm and 3" in diameter)

04 Cobble (between 3" and 12" in diameter)

05 Boulder (greater than 12" in diameter)

SKIP TO QUESTION 3.25 ON PAGE 3-12

3.22 Did this processing unit generate a SLUDGE RESIDUE in 1988?
(Circle one number.)

01 Yes *(CONTINUE TO NEXT QUESTION)*
02 No *(SKIP TO QUESTION 3.35 ON PAGE 3-16)*

NOTICE: If the film image is less clear than this notice, it is due to the quality of the document being filmed

MW2F 006

0176

3.18 How much of the liquid residue generated by this processing unit was INITIALLY SENT to each of the following destinations in 1988?

(Report the quantities as generated. For each destination that did not receive the liquid residue, enter "0" for the quantity. See the ***Instructions and Definitions*** *booklet for definitions of NPDES, PDES, and POTW if these acronyms are unfamiliar.)*

Initial Destination	Quantity in 1988
a. Discharged under a NPDES or state PDES permit without further treatment	_____ gallons
b. Discharged to a POTW without further treatment	_____ gallons
c. Sent without further treatment to onsite processing units: *(Indicate which units using the labels on the schematic prepared for Section 1.)*	
_____	_____ gallons
_____	_____ gallons
_____	_____ gallons
_____	_____ gallons
d. Sent to onsite waste management units: *(Indicate which units using the labels on the schematic prepared for Section 1.)*	
_____	_____ gallons
_____	_____ gallons
_____	_____ gallons
_____	_____ gallons
e. Sent offsite for further treatment or disposal	_____ gallons
f. Sold without further treatment for offsite use	_____ gallons
g. Other *(specify)*:	
_____	_____ gallons
_____	_____ gallons

NOTICE: If the film image is less clear than this notice, it is due to the quality of the document being filmed

MW2F 006

0177

The previous questions in this section obtained *1988 information* on the surface impoundment(s) that received special wastes (or their residues). The remaining questions in this section shift the focus to *1989 or planned future changes* in the surface impoundment(s) that have affected or will affect the facility's management of special wastes (or their residues).

5.42 Have there been any changes *in 1989* in the facility's surface impoundment(s) that received a special waste (or its residue) in 1988?
(Circle one number. Examples of eligible changes include: changes in operating status, impoundment expansions, and changes in the destination of liquids and solids removed from surface impoundments.)

01 Yes *(CONTINUE TO NEXT QUESTION)*
(02) No *(SKIP TO QUESTION 5.44)*

5.43 Briefly describe these 1989 changes in the facility's surface impoundment(s) and their effect on the management of special wastes (or their residues).

_____

_____

_____

_____

_____

5.44 Are any changes planned in *calendar years 1989 through 1993* in the facility's surface impoundment(s) that received a special waste (or its residue) in 1988?
(Circle one number. Examples of eligible changes include: changes in operating status, impoundment expansions, and changes in the destination of liquids and solids removed from surface impoundments.)

(01) Yes *(CONTINUE TO NEXT QUESTION)*
02 No *(SKIP TO SECTION 6)*

NOTICE: If the film image is less clear than this notice, it is due to the quality of the document being filmed

MW2F 006

0178

5.45 Briefly describe these planned changes in the facility's surface impoundment(s) and their anticipated effect on the management of special wastes (or their residues).

Inactive pond water is accumulated rainfall runoff that falls on an inactive phosphogypsum management site. When the present phosphogypsum waste management site can no long accomodate 100% of the current production of phosphogypsum (by 1992), use of that site for phosphogypsum storage will be suspended and current production of phosphogypsum will be routed to a new storage or management site. At that time, until the storage of phosphogypsum at the existing management site is resumed, that site will be inactive, rainfall that falls on it will be accumulated as inactive pond water, and the total amount of inactive pond water will increase.

NOTICE: If the film image is less clear than this notice, it is due to the quality of the document being filmed

MW2F 006

0179

SECTION 6

OTHER WASTE MANAGEMENT UNITS THAT RECEIVE A SPECIAL WASTE (OR ITS RESIDUE)

Section 4 obtained information on wastewater treatment plants that received a special waste (or its residue) in 1988. Section 5 gathered similar information on surface impoundments (including tailings ponds and lagoons) that received a special waste (or its residue) in 1988. Section 6 requests detailed information on OTHER waste management units that received a special waste (or its residue) in 1988, including:

Waste piles
Residuals stockpiles
Landfills
Underground injection wells
Gypsum stacks
Mines, quarries or stopes.

6.1 Did a waste management unit other than a wastewater treatment plant or surface impoundment at this facility RECEIVE a special waste (or its residue) in 1988?
(Circle one number.)

01 Yes *(CONTINUE WITH THIS SECTION OF THE QUESTIONNAIRE)*
02 No *(SKIP TO SECTION 7)*

Section 6 contains a set of questions that you complete for EACH waste management unit (other than wastewater treatment plants or surface impoundments) that RECEIVED a special waste (or its residue) in 1988. (These waste management units must be shown on the schematic prepared for Section 1.) For example, if the facility has two landfills that received a special waste (or its residue) in 1988, then you complete a question set on EACH landfill. However, if the facility has a waste pile that received two or more special wastes (or their residues), you need only complete one question set for that waste pile. Do not complete a question set on waste management units that are now permanently closed.

NOTICE: If the film image is less clear than this notice, it is due to the quality of the document being filmed

MW2F 006

0180

Only on question set is provided in this section of the questionnaire. One more question set is provided the *Extra Question Sets* booklet. If your facility had more than two waste management ur s, other than wastewater treatment plants or surface impoundments, that received a spec waste (or its residue) in 1988, please make as many additional copies of the extra Section 6 uestion set as needed.

If ou are unsure about how many Section 6 question sets to complete for our facility, please call the SURVEY HELPLINE (1-800-635-8850).

For EPA use: /

NOTICE: If the film image is less clear than this notice, it is due to the quality of the document being filmed

MW2F 006

0181

QUESTION SET FOR OTHER WASTE MANAGEMENT UNIT

Answer questions 6.2 through 6.30 for each waste management unit (other than wastewater treatment plants and surface impoundments) that received a special waste (or its residue) in 1988. The special wastes are listed on page 2-1. The waste management unit must be shown on the schematic prepared for Section 1.

6.2 Which waste management unit is the subject of this question set?

(Use the label on the schematic prepared for Section 1 to identify this waste management unit.)

Label on waste management unit: Phosphogypsum Waste Management site

6.3 What calendar year did this waste management unit first receive a special waste?

Year: 1968

6.4 What were the INFLOWS to this waste management unit and what was the quantity of each inflow in 1988?

(Include special wastes and residues of special wastes in addition to other inflows, if any, in your answer. Be sure to indicate the unit of measure for each inflow.)

Inflow	Quantity in 1988	Unit of Measure
a. Phosphogypsum *	4,500,000	TONS 32
b. Process waste water from Phosphoric Acid Plant	1,071,360,000	~~Gallons~~ 24
c.		
d. Sulfuric Acid Waste water	55,000	~~Gallons~~ 24
e.		
f. Uranium Recovery Plant waste water	31,127,840	~~Gallons~~ 24
g.		
h.		

* See facility note 2.31

NOTICE: If the film image is less clear than this notice, it is due to the quality of the document being filmed

MW2F 006

0182

6.5 Is this waste management unit an underground injection well?
(Circle one number.)

01 Yes *(CONTINUE TO NEXT QUESTION)*
02 No *(SKIP TO QUESTION 6.9)*

6.6 What is the classification of this underground injection well?
(Circle one number.)

01 Class 1 (non-hazardous)

02 Class 2

03 Class 3

04 Class 4

05 Class 5

6.7 What was the injection depth of this well on December 31, 1988?

Injection depth: _____ feet

6.8 What was the DAILY maximum practical operating capacity of this underground injection well on December 31, 1988?

_____ gallons/day

SKIP TO QUESTION 6.27 ON PAGE 6-9

6.9 Is this waste management unit a gypsum stack?
(Circle one number.)

01 Yes *(CONTINUE TO NEXT QUESTION)*
02 No *(SKIP TO QUESTION 6.13 ON NEXT PAGE)*

NOTICE: If the film image is less clear than this notice, it is due to the quality of the document being filmed

MW2F 006

0183

6.10 What were the approximate dimensions of this gypsum stack on December 31, 1988?
(Select one of the two specified units of measure for each dimension.)

a. Height: 80 feet **OR** _____ yards

b. Surface area of base: _____ square feet **OR** 640 acres

6.11 What were the AGGREGATE dimensions of the pond(s) on top of this gypsum stack on December 31, 1988?
(Select one of the two specified units of measure for each dimension.)

a. Typical depth: [redacted] 2 feet **OR** _____ yards

b. Surface area of pond(s): _____ square feet **OR** 45 acres

6.12 What was the typical pH of the liquid in the gypsum stack pond(s) in 1988?

pH: 1.0 S.U.

SKIP TO QUESTION 6.17 ON NEXT PAGE

6.13 Is this waste management unit a mine, quarry, or stope?
(Circle one number.)

01 Yes *(CONTINUE TO NEXT QUESTION)*
02 No *(SKIP TO QUESTION 6.16 ON NEXT PAGE)*

6.14 What was the approximate depth of the waste material in this mine, quarry, or stope on December 31, 1988?
(Select one of the two specified units of measure.)

Depth of material: _____ feet **OR** _____ yards

NOTICE: If the film image is less clear than this notice, it is due to the quality of the document being filmed

MW2F 006

0184

6.15 What was the surface area of the top of the material in this mine, quarry, or stope on December 31, 1988?

(Select one of the two specified units of measure.)

Surface area of top: _____ square feet **OR** _____ acres

SKIP TO QUESTION 6.17

6.16 What were the approximate dimensions of this waste management unit on December 31, 1988?

(Select one of the two specified units of measure for each dimension.)

a. Height or depth: _____ feet **OR** _____ yards

b. Surface area of base or top: _____ square feet **OR** _____ acres

6.17 What was the approximate total amount of material in this waste management unit on December 31, 1988?

(Report the quantity in place and be sure to indicate the unit of measure for this amount of material.)

Cumulative amount of material: 50,000,000 ~~TONS~~ 32
(unit of measure)

6.18 What was the anticipated REMAINING USEFUL LIFE of this waste management unit on December 31, 1988?

Remaining useful life: 3 years

NOTICE: If the film image is less clear than this notice, it is due to the quality of the document being filmed

MW2F 006

0185

6.19 Which of the following best describes the liner under this waste management unit on December 31, 1988?
(Circle all that apply.)

01 Bedrock

02 In-situ clay

03 Recompacted local clay

04 Asphalt

05 Concrete

06 Synthetic *(specify)*: _____

_____

07 Other *(specify)*: _____

_____

08 No liner

09 Not applicable to this type of waste management unit

6.20 Was any material removed from this waste management unit in 1988?
(Circle one number.)

01 Yes *(CONTINUE TO NEXT QUESTION)*
02 No *(SKIP TO QUESTION 6.24 ON NEXT PAGE)*

6.21 How much material was removed from this waste management unit in 1988?
(Be sure to indicate the unit of measure for this quantity.)

Quantity removed: 78 TONS 32
(unit of measure)

6.22 Does the facility periodically test the composition of the material removed from this waste management unit?
(Circle one number.)

01 Yes
02 No

NOTICE: If the film image is less clear than this notice, it is due to the quality of the document being filmed

MW2F 006

0186

6.23 Where was the material removed from this waste management unit SENT in 1988?
(Describe the onsite and/or offsite destination(s) of the material removed from this waste management unit.)

The material removed (phosphogypsum) in 1988 was consumed on site in the Re-use phosphogypsum Pilot Plant

6.24 Did this waste management unit have a leachate collection system in 1988?
(Circle one number.)

01 Yes *(CONTINUE TO NEXT QUESTION)*
02 No *(SKIP TO QUESTION 6.26 ON NEXT PAGE)* * see facility note

6.25 Does the facility periodically test the chemical composition of the leachate?
(Circle one number.)

01 Yes
02 No

NOTICE: If the film image is less clear than this notice, it is due to the quality of the document being filmed

MW2F 006

0187

6.26 Were any of the following practices being used on this waste management unit on December 31, 1988?

(For each practice, circle 01 for Yes or 02 for No.)

Practice	Yes	No
a. Dust suppression/control	01	02
b. Runon/runoff controls	01	02
c. Secondary leachate collection	01	02
d. Slurry walls	01 *	02
e. Other *(specify)*: _____		

* see facility note

6.27 What is the distance from this waste management unit to the nearest residence outside the boundary of this facility?

(Select one of the two specified units of measure.)

_____ yards **OR** 0.5 miles

NOTICE: If the film image is less clear than this notice, it is due to the quality of the document being filmed

MW2F 006

0188

6.28 What is the general direction of the nearest residence from this waste management unit?

(Circle one number.)

01 North

02 Northeast

03 East

04 Southeast

05 South

06 Southwest

07 West

08 Northwest

6.29 Does this facility have a written closure plan for this waste management unit that has been approved by the appropriate federal or state governmental agency?

(Circle one number.)

01 Yes

02 No

6.30 Is there another waste management unit (other than a wastewater treatment plant or surface impoundment) at this facility that received a special waste (or its residue) in 1988?

(Circle one number.)

1 Yes *(COMPLETE A QUESTION SET FROM THE EXTRA QUESTION SETS BOOKLET ON THIS OTHER WASTE MANAGEMENT UNIT)*

2 No *(CONTINUE TO NEXT PAGE)*

NOTICE: If the film image is less clear than this notice, it is due to the quality of the document being filmed

MW2F 006

0189

The previous questions in this section obtained *1988 information* on certain types of waste management units that received special wastes (or their residues). The remaining questions in this section shift the focus to *1989 or planned future changes* in these same types of waste management units that have affected or will affect the facility's management of special wastes (or their residues).

6.31 Have there been any changes *in 1989* in the facility's waste management unit(s) (other than wastewater treatment plants and surface impoundments) that received a special waste (or its residue) in 1988?

(Circle one number. Examples of eligible changes include: changes in operating status, expansions, and changes in the handling of special wastes.)

01 Yes *(CONTINUE TO NEXT QUESTION)*
(02) No *(SKIP TO QUESTION 6.33)*

6.32 Briefly describe these 1989 changes in the facility's waste management unit(s) and their effect on the management of special wastes (or their residues).

_____

_____

_____

_____

_____

6.33 Are any changes planned in *calendar years 1989 through 1993* in the facility's waste management unit(s) (other than wastewater treatment plants and surface impoundments) that received a special waste (or its residue) in 1988?

(Circle one number. Examples of eligible changes include: changes in operating status, expansions, and changes in the handling of wastes.)

(01) Yes *(CONTINUE TO NEXT QUESTION)*
02 No *(SKIP TO SECTION 7)*

NOTICE: If the film image is less clear than this notice, it is due to the quality of the document being filmed

MW2F 006

0190

6.34 **Briefly describe these planned changes in the facility's waste management unit(s) and their anticipated effect on the management of special wastes (or their residues).**

The facility is in the process of applying to the Louisiana Dept. of Envir. Quality - Solid Waste Division for a Solid Waste Permit Modification to expand the existing phosphogypsum waste Management unit.

NOTICE: If the film image is less clear than this notice, it is due to the quality of the document being filmed

MW2F 006

0191

SECTION 7

ENVIRONMENTAL MONITORING NEAR WASTE MANAGEMENT UNITS

Section 7 focuses on the facility's environmental monitoring, if any, NEAR the waste management units (excluding wastewater treatment plants) that received a special waste (or its residue) in 1988. These waste management units, which were covered in Sections 5 and 6, include:

Surface impoundments (including tailings ponds and lagoons)
Waste piles
Residuals stockpiles
Landfills
Underground injection wells
Gypsum stacks
Mines, quarries, and stopes.

For the sake of simplicity, the waste management units (excluding wastewater treatment plants) that received a special waste (or its residue) in 1988 are referred to as **SPECIAL WASTE MANAGEMENT UNITS** in this section.

7.1 What is the typical depth from the bottom of the special waste management units to the water in the uppermost USABLE aquifer at its HIGHEST seasonal level?

Depth to water in wet season: ~~13 msl~~ feet *

7.2 What is the typical depth from the bottom of the special waste management units to the water in the uppermost USABLE aquifer at its LOWEST seasonal level?

Depth to water in dry season: ~~3 msl~~ feet *

~~* See facility Note~~

NOTICE: If the film image is less clear than this notice, it is due to the quality of the document being filmed

MW2F 006

0192

7.3 What are the typical permeability (hydraulic conductivity), porosity, and hydraulic gradient of the uppermost USABLE aquifer underlying the special waste management units?

(Select one of the [redacted]ified units of measure for permeability.)

a. Permeability: [redacted] 10^{-4} centimeters per second **OR** _____ feet per minute

b. Porosity: * [redacted] percent

c. Hydraulic gradient: ~~≈ 0.0022 ft/ft~~ ~~percent~~ [redacted]

7.4 What are the principal uses of the water in the uppermost USABLE aquifer underlying the special waste management units?

(Circle all numbers that apply.)

01 Municipal

02 Rural domestic (not including agricultural)

03 Agricultural

04 Commercial/industrial

05 Other *(specify)*: _____

_____

(06) Unknown

07 No current use of this aquifer

7.5 Are there any aquifers between the bottom of the special waste management units and the uppermost USABLE aquifer?

(Circle one number.)

(01) Yes *(CONTINUE TO NEXT QUESTION)*

02 No *(SKIP TO QUESTION 7.8 ON NEXT PAGE)*

7.6 How many aquifers lie between the bottom of the special waste management units [redacted]nd the uppermost USABLE aquifer?

Number of aquifers: * See facility note

NOTICE: If the film image is less clear than this notice, it is due to the quality of the document being filmed

MW2F 006

0193

NOTICE: If the film image is less clear than this notice, it is due to the quality of the document being filmed

7.7 Briefly describe the characteristics of the aquifer(s) lying between the special waste management units and the uppermost USABLE aquifer.
(Relevant aquifer characteristics include: depth to aquifer, aquifer thickness, salinity, and reasons for the aquifer being unusable.)

* See facility note 7.1 for complete information
The aquifiers lying between the special waste management units and the uppermost USABLE aquifier are shallow discontinuous sand/silt unit which is not used primarily for drinking water

7.8 Did this facility monitor the water quality in the uppermost USABLE aquifer underlying the special waste management units in 1988?
(Circle one number.)

01 Yes *(CONTINUE TO NEXT QUESTION)*
(02) No *(SKIP TO QUESTION 7.17 ON PAGE 7-6)* * ~~* See facility note 7.7~~

7.9 How many ground water monitoring locations for the uppermost USABLE aquifer underlying the special waste management units did this facility operate in 1988?
(Each of these locations must be labeled on the FACILITY SITE MAP.)

Number of monitoring locations: _____

7.10 What was the typical depth of the monitoring well screen in these ground water monitoring wells in 1988?

Typical well screen depth: _____ feet

7.11 Approximately how many times was the ground water sampled at each monitoring well in 1988?

Frequency of sampling: _____ times in 1988

MW2F 006
0194

7.12 Which of the following parameters and constituents were monitored in the ground water underlying the special waste management units in 1988?
(Circle all numbers that apply.)

01 pH

02 Organics

03 Major cations

04 Major anions

05 Radionuclides

06 Metals

07 Other *(specify)*: _____

_____

7.13 Does the uppermost USABLE aquifer underlying the special waste management units contain FRESH water?
(Circle one number.)

01 Yes *(CONTINUE TO NEXT QUESTION)*
02 No *(SKIP TO QUESTION 7.17 ON PAGE 7-6)*

7.14 Have the ground water monitoring wells downgradient from the special waste management units indicated an exceedance of national primary or secondary drinking water standards since January 1, 1984?
(Circle one number.)

01 Yes *(CONTINUE TO NEXT QUESTION)*
02 No *(SKIP TO QUESTION 7.17 ON PAGE 7-6)*

NOTICE: If the film image is less clear than this notice, it is due to the quality of the document being filmed

MW2F 006

0195

7.15 Which of the following drinking water standards were exceeded in the ground water near the special waste management units since January 1, 1984?
(For each standard, circle all numbers that apply.)

Drinking Water Standard (Concentration)	Exceeded Up-gradient	Exceeded Down-gradient	Monitored but not Exceeded	Not Monitored
Primary Standards				
a. Arsenic (0.05 mg/l)	01	02	03	04
b. Barium (1.0 mg/l)	01	02	03	04
c. Cadmium (0.01 mg/l)	01	02	03	04
d. Chromium (0.05 mg/l)	01	02	03	04
e. Lead (0.05 mg/l)	01	02	03	04
f. Mercury (0.002 mg/l)	01	02	03	04
g. Nitrate (as N) (10.0 mg/l)	01	02	03	04
h. Selenium (0.01 mg/l)	01	02	03	04
i. Silver (0.05 mg/l)	01	02	03	04
j. Total Trihalomethanes (0.1 mg/l)	01	02	03	04
k. Radium-226 and Radium-228 (5.0 pCi/l)	01	02	03	04
l. Gross Alpha Particle Activity* (15.0 pCi/l)	01	02	03	04
Secondary Standards				
m. Chloride (250.0 mg/l)	01	02	03	04
n. Copper (1.0 mg/l)	01	02	03	04
o. Fluoride (2.0 mg/l)	01	02	03	04
p. Iron (0.3 mg/l)	01	02	03	04
q. Manganese (0.05 mg/l)	01	02	03	04
r. pH (6.5-8.5)	01	02	03	04
s. Sulfate (250.0 mg/l)	01	02	03	04
t. Total Dissolved Solids (TDS) (500.0 mg/l)	01	02	03	04
u. Zinc (5.0 mg/l)	01	02	03	04

*Including Radium-226 but excluding radon and uranium.

NOTICE: If the film image is less clear than this notice, it is due to the quality of the document being filmed
MW2F 006
0196

7.16 Briefly explain why the ground water downgradient from the special waste management units exceeded national primary or secondary drinking water standards after January 1, 1984.

_____

_____

_____

_____

_____

_____

7.17 Did this facility monitor the water quality in aquifers OTHER THAN the uppermost usable aquifer underlying the special waste management units in 1988?
(Circle one number.)

(01) Yes *(CONTINUE TO NEXT QUESTION)*
02 No *(SKIP TO QUESTION 7.19)*

7.18 Which other aquifers were monitored in 1988 and why were they monitored?

The facility monitored the discontinuous sand/silt units (deep and shallow zones) underlying at this special waste management unit. There are 25 monitor wells ranges fm 30-90 ft deep. The typical depth of the monitoring well screen are 5-10ft and the ground water were sampled twice per year. for Detail explanation, see facility note 7.1 & 7.2, 7.18

7.19 Did this facility monitor AMBIENT SURFACE WATER QUALITY near the special waste management units in 1988?
(Circle one number. Do not include any monitoring of NPDES or state PDES discharges in answering this question.)

01 Yes *(CONTINUE TO NEXT QUESTION)*
(02) No *(SKIP TO QUESTION 7.33 ON PAGE 7-14)*

NOTICE: If the film image is less clear than this notice, it is due to the quality of the document being filmed

MW2F 006

0197

7.20 How many ambient surface water monitoring locations near the special waste management units did this facility operate in 1988?
(Each of these locations must be labeled on the FACILITY SITE MAP.)

Number of monitoring locations: _____

7.21 Approximately how many times was the ambient surface water sampled at each monitoring location in 1988?

Frequency of sampling: _____ times in 1988

7.22 Which of the following parameters and constituents were monitored in the ambient surface water near the special waste management units in 1988?
(Circle all numbers that apply.)

01 Biological indicator organisms

02 pH

03 Major cations

04 Major anions

05 Radionuclides

06 Metals

07 Nutrients

08 Other *(specify)*: _____

_____

7.23 Is the ambient surface water near the special waste management units FRESH water?
(Circle one number.)

01 Yes *(CONTINUE TO NEXT QUESTION)*
02 No *(SKIP TO QUESTION 7.30 ON PAGE 7-12)*

NOTICE: If the film image is less clear than this notice, it is due to the quality of the document being filmed

MW2F 006

0198

7.24 Has the ambient surface water monitoring downstream from the special waste management units indicated an exceedance of national primary or secondary drinking water standards since January 1, 1984?
(Circle one number.)

01 Yes *(CONTINUE TO NEXT QUESTION)*
02 No *(SKIP TO QUESTION 7.27 ON PAGE 7-10)*

NOTICE: If the film image is less clear than this notice, it is due to the quality of the document being filmed

MW2F 006

0199

7.25 **Which of the following drinking water standards were exceeded in the ambient surface water near the special waste management units since January 1, 1984?**
(For each standard, circle all numbers that apply.)

Drinking Water Standard (Concentration)	Exceeded Up-stream	Exceeded Down-stream	Monitored but not Exceeded	Not Monitored
Primary Standards				
a. Arsenic (0.05 mg/l)	01	02	03	04
b. Barium (1.0 mg/l)	01	02	03	04
c. Cadmium (0.01 mg/l)	01	02	03	04
d. Chromium (0.05 mg/l)	01	02	03	04
e. Lead (0.05 mg/l)	01	02	03	04
f. Mercury (0.002 mg/l)	01	02	03	04
g. Nitrate (as N) (10.0 mg/l)	01	02	03	04
h. Selenium (0.01 mg/l)	01	02	03	04
i. Silver (0.05 mg/l)	01	02	03	04
j. Total Trihalomethanes (0.1 mg/l)	01	02	03	04
k. Radium-226 and Radium-228 (5.0 pCi/l)	01	02	03	04
l. Gross Alpha Particle Activity* (15.0 pCi/l)	01	02	03	04
Secondary Standards				
m. Chloride (250.0 mg/l)	01	02	03	04
n. Copper (1.0 mg/l)	01	02	03	04
o. Fluoride (2.0 mg/l)	01	02	03	04
p. Iron (0.3 mg/l)	01	02	03	04
q. Manganese (0.05 mg/l)	01	02	03	04
r. pH (6.5-8.5)	01	02	03	04
s. Sulfate (250.0 mg/l)	01	02	03	04
t. Total Dissolved Solids (TDS) (500.0 mg/l)	01	02	03	04
u. Zinc (5.0 mg/l)	01	02	03	04

*Including Radium-226 but excluding radon and uranium.

NOTICE: If the film image is less clear than this notice, it is due to the quality of the document being filmed

MW2F 006

7.26 Briefly explain why the ambient surface water downstream from the special waste management units exceeded national primary or secondary drinking water standards after January 1, 1984.

_____

_____

_____

_____

_____

_____

7.27 Has the ambient surface water monitoring downstream from the special waste management units indicated an exceedance of national ambient water quality criteria since January 1, 1984?

(Circle one number.)

01 Yes *(CONTINUE TO NEXT QUESTION)*

02 No *(SKIP TO QUESTION 7.33 ON PAGE 7-14)*

NOTICE: If the film image is less clear than this notice, it is due to the quality of the document being filmed

MW2F 006

0201

7.28 **Which of the following water quality criteria were exceeded in the ambient surface water near the special waste management units since January 1, 1984?**
(For each criterion, circle all numbers that apply.)

Ambient Water Quality Criterion (Concentration)	Exceeded Up-stream	Exceeded Down-stream	Monitored but not Exceeded	Not Monitored
a. Arsenic (pent) (48.0 µg/l)[a]	01	02	03	04
b. Arsenic (tri) (190.0 µg/l)	01	02	03	04
c. Beryllium (5.3 µg/l)	01	02	03	04
d. Cadmium (1.1 µg/l)	01	02	03	04
e. Chloride (230.0 µg/l)	01	02	03	04
f. Chromium (hex) (11.0 µg/l)	01	02	03	04
g. Copper (12.0 µg/l)	01	02	03	04
h. Cyanide (5.2 µg/l)	01	02	03	04
i. Iron (1,000.0 µg/l)	01	02	03	04
j. Lead (3.2 µg/l)	01	02	03	04
k. Mercury (0.012 µg/l)	01	02	03	04
l. Nickel (160.0 µg/l)	01	02	03	04
m. pH (6.5-9.0)	01	02	03	04
n. Selenium (5.0 µg/l)	01	02	03	04
o. Silver (0.12 µg/l)	01	02	03	04
p. Zinc (110.0 µg/l)	01	02	03	04

[a]Lowest Observable Effect Level - data are insufficient to derive a AWQC.

NOTICE: If the film image is less clear than this notice, it is due to the quality of the document being filmed

MW2F 006

0202

7.29 **Briefly explain why the ambient surface water downstream from the special waste management units exceeded national ambient water quality criteria after January 1, 1984.**

_____

_____

_____

_____

_____

_____

SKIP TO QUESTION 7.33 ON PAGE 7-14

7.30 **Has the ambient surface water monitoring downstream from the special waste management units indicated an exceedance of national ambient water quality criteria for the protection of aquatic life since January 1, 1984?**
(Circle one number.)

01 Yes *(CONTINUE TO NEXT QUESTION)*
02 No *(SKIP TO QUESTION 7.33 ON PAGE 7-14)*

NOTICE: If the film image is less clear than this notice, it is due to the quality of the document being filmed

MW2F 008

0203

7.31 Which of the following water quality criteria were exceeded in the ambient surface water near the special waste management units since January 1, 1984?
(For each criterion, circle all numbers that apply.)

Ambient Water Quality Criterion (Concentration)	Exceeded Up-stream	Exceeded Down-stream	Monitored but not Exceeded	Not Monitored
a. Arsenic (pent) (13.0 mg/l)[a]	01	02	03	04
b. Arsenic (tri) (36.0 mg/l)	01	02	03	04
c. Cadmium (9.3 mg/l)	01	02	03	04
d. Chloride (7.5 mg/l)	01	02	03	04
e. Chromium (hex) (50.0 mg/l)	01	02	03	04
f. Copper (2.9 mg/l)	01	02	03	04
g. Cyanide (1.0 mg/l)	01	02	03	04
h. Lead (5.6 mg/l)	01	02	03	04
i. Mercury (0.025 mg/l)	01	02	03	04
j. Nickel (7.9 mg/l)	01	02	03	04
k. Phosphorus (elemental) (0.1 mg/l)	01	02	03	04
l. Selenium (54.0 mg/l)	01	02	03	04
m. Sulfide (hydrogen sulfide) (2.0 mg/l)	01	02	03	04
n. Zinc (86.0 mg/l)	01	02	03	04

[a]Lowest Observable Effect Level - data are insufficient to derive a AWQC.

7.32 Briefly explain why the ambient surface water downstream from the special waste management units exceeded national ambient water quality criteria for the protection of aquatic life after January 1, 1984.

_____

_____

_____

_____

_____

_____

NOTICE: If the film image is less clear than this notice, it is due to the quality of the document being filmed

MW2F 006

0204

7.33 Did this facility monitor AMBIENT AIR QUALITY near the special waste management units in 1988?
(Circle one number.)

(01) Yes *(CONTINUE TO NEXT QUESTION)*
02 No *(SKIP TO SECTION 8)*

7.34 How many ambient air quality monitoring locations near the special waste management units did this facility operate in 1988?
(Each of these locations should be labeled on the FACILITY SITE MAP.)

Number of monitoring locations: 7

7.35 Excluding continuous monitoring, approximately how many times was the ambient air sampled at each monitoring location in 1988?

Frequency of sampling: 2 times in 1988

7.36 Which of the following parameters and constituents were monitored in the ambient air near the special waste management units in 1988?
(Circle all numbers that apply.)

01 Particulate matter
02 Metals
(03) Other *(specify)*: Radon

7.37 Has the ambient air quality monitoring near the special waste management units indicated an exceedance of National Ambient Air Quality Standards (NAAQS) or National Emissions Standards for Hazardous Air Pollutants (NESHAP) since January 1, 1984?
(Circle one number.)

01 Yes *(CONTINUE TO NEXT QUESTION)*
(02) No *(SKIP TO SECTION 8)*

NOTICE: If the film image is less clear than this notice, it is due to the quality of the document being filmed

MW2F 006

0205

7.38 Which of the following standards were exceeded near the special waste management units since January 1, 1984?

(For each standard, circle all numbers that apply.)

Standard	Exceeded	Not Exceeded	Not Monitored
National Ambient Air Quality Standards			
a. Sulfur Oxides			
24-hour average concentration (365 $\mu g/m^3$ [0.14 ppm])	1	2	3
annual arithmetic mean (80 $\mu g/m^3$ [0.03 ppm])	1	2	3
b. Particulate Matter (PM-10)			
24-hour average concentration (150 $\mu g/m^3$)	1	2	3
annual arithmetic mean (50 $\mu g/m^3$)	1	2	3
c. Carbon Monoxide			
8-hour average concentration (10 mg/m^3 [9 ppm])	1	2	3
1-hour average concentration (40 mg/m^3 [35 ppm])	1	2	3
d. Ozone			
1-hour average concentration (235 $\mu g/m^3$ [0.12 ppm])	1	2	3
e. Nitrogen Dioxide			
annual arithmetic mean (100 $\mu g/m^3$ [0.053 ppm])	1	2	3
f. Lead			
arithmetic mean—3 month average (1.5 $\mu g/m^3$)	1	2	3
National Emissions Standards for Hazardous Air Pollutants			
g. Radionuclides*			
25 mrem/yr to the whole body	1	2	3
75 mrem/yr to the critical organ of any individual	1	2	3
h. Polonium-210**			
21 curies in a calendar year	1	2	3

* Applies only to facilities licensed by the Nuclear Regulatory Commission and federal facilities not covered by Subpart H of 40 CFR Part 61. Standard excludes doses due to radon-220, radon-222, and their respective decay products.

** Includes only emissions of polonium-210 to air from calciners and nodulizing kilns at elemental phosphorous plants.

NOTICE: If the film image is less clear than this notice, it is due to the quality of the document being filmed

MW2F 006

020b

7.39 **Briefly explain why the air near the special waste management units exceeded NAAQS or NESHAP levels after January 1, 1984.**

_____

_____

_____

_____

_____

_____

NOTICE: If the film image is less clear than this notice, it is due to the quality of the document being filmed

MW2F 006

0207

SECTION 8

WASTE MANAGEMENT UNITS NOT COVERED IN SECTIONS 5 AND 6

8.1 Did this facility complete EPA's 1987 National Survey of Hazardous Waste Treatment, Storage, Disposal, and Recycling Facilities?
(Circle one number.)

01 Yes *(SKIP TO SECTION 9)*
(02) No *(CONTINUE TO NEXT QUESTION)*

8.2 Does this facility have a permit or interim status under Subtitle C of RCRA to treat, store, or dispose of hazardous wastes?
(Circle one number.)

01 Yes *(SKIP TO SECTION 9)*
(02) No *(CONTINUE WITH THIS SECTION OF THE QUESTIONNAIRE)*

Sections 5 and 6 of this questionnaire obtained detailed information on surface impoundments and other waste management units (excluding wastewater treatment plants) that received a special waste (or its residue) IN 1988. Section 8 asks for more general information on the facility's OTHER surface impoundments and OTHER waste management units (excluding wastewater treatment plants) that have received residuals from mining, leaching, beneficiating, processing, and/or other manufacturing/fabricating operations. These "other" waste management units may be active, inactive, or closed. The specific types of waste management units covered in this section include:

Surface impoundments (including tailings ponds and lagoons)
Waste piles
Residuals stockpiles
Landfills
Underground injection wells
Gypsum stacks
Mines, quarries, and stopes.

EPA will use the information from this section to estimate the cost of correcting potential environmental problems resulting from waste management units having no direct connection with the special wastes. Consequently, EPA needs general information on ALL onsite waste management units, including those that did not receive a special waste (or its residue) in 1988.

NOTICE: If the film image is less clear than this notice, it is due to the quality of the document being filmed
MW2F 006
0208

Because less detailed information is needed on waste management units not receiving a special waste (or its residue) in 1988, Section 8 is organized differently from Sections 5 and 6. In the earlier sections, you completed one set of questions for each waste management unit. In Section 8, you aggregate by TYPE of waste management unit. In other words, you answer one series of questions for the TOTAL NUMBER of waste management units at the facility of a particular TYPE (such as waste piles), excluding the waste management units covered in Sections 5 and 6. Therefore, Section 8 consists of seven series of questions, one for each type of waste management unit. Each series of questions requests similar information on the number, dimensions, and content of the relevant waste management units. Rough estimates are acceptable in answering these questions. YOU DO NOT NEED TO MAKE SPECIAL MEASUREMENTS TO ANSWER THE QUESTIONS IN THIS SECTION.

8.3 Are there any other active, inactive, or closed SURFACE IMPOUNDMENTS (INCLUDING TAILINGS PONDS AND LAGOONS) at this facility (excluding those covered in Section 5)?

(Circle one number.)

01 Yes --------> **How many?** _____

(02) No *(SKIP TO QUESTION 8.11 ON PAGE 8-4)*

8.4 List these surface impoundments using the unique identifiers from the FACILITY SITE MAP prepared for Section 1.

_____ _____ _____ _____

_____ _____ _____ _____

_____ _____ _____ _____

_____ _____ _____ _____

8.5 What quantity of material (on a wet-weight basis) did these surface impoundments receive in 1988 in total?

(If none, enter "0" for the quantity. Be sure to indicate the unit of measure for this quantity of material.)

Quantity of material received: _____ _____
(unit of measure)

NOTICE: If the film image is less clear than this notice, it is due to the quality of the document being filmed

MW2F 006

0209

8.6 **What was the COMBINED surface area of these impoundments on December 31, 1988?**

(Select one of the two specified units of measure.)

Combined surface area: _____ square feet **OR** _____ acres

8.7 **What was the AVERAGE depth of these surface impoundments on December 31, 1988?**

(Select one of the two specified units of measure.)

Average depth: _____ feet **OR** _____ yards

8.8 **What was the REMAINING useful life of these surface impoundments on December 31, 1988 in total?**

Remaining useful life: _____ years

8.9 **What was the CUMULATIVE amount of solids in these surface impoundments on December 31, 1988?**

(Report the quantity in place and be sure to indicate the unit of measure for this quantity of solids.)

Cumulative amount of solids: _____ _____
(unit of measure)

8.10 **Describe the type(s) of material and estimate the relative amount of this material (e.g., 100% wastewater sludge) in these surface impoundments on December 31, 1988.**

_____

_____

_____

_____

_____

_____

NOTICE: If the film image is less clear than this notice, it is due to the quality of the document being filmed

MW2F 006

0210

8.11 Are there any other active, inactive, or closed WASTE PILES at this facility (excluding those covered in Section 6)?
(Circle one number.)

01 Yes -------> **How many?** _____

(02) No *(SKIP TO QUESTION 8.18 ON PAGE 8-5)*

8.12 List these waste piles using the unique identifiers from the FACILITY SITE MAP prepared for Section 1.

_____ _____ _____ _____

_____ _____ _____ _____

_____ _____ _____ _____

_____ _____ _____ _____

8.13 What quantity of material (on a wet-weight basis) did these waste piles receive in 1988 in total?
(If none, enter "0" for the quantity. Select one of the two specified units of measure.)

Quantity of material received: _____ short tons **OR** _____ cubic yards

8.14 What was the COMBINED surface area of the bases of these waste piles on December 31, 1988?
(Select one of the two specified units of measure.)

Combined surface area: _____ square feet **OR** _____ acres

8.15 What was the AVERAGE height of these waste piles on December 31, 1988?
(Select one of the two specified units of measure.)

Average height: _____ feet **OR** _____ yards

8.16 What was the CUMULATIVE amount of material in these waste piles on December 31, 1988?
(Report the quantity in place using one of the two specified units of measure.)

Cumulative amount of material: _____ short tons **OR** _____ cubic yards

NOTICE: If the film image is less clear than this notice, it is due to the quality of the document being filmed

MW2F 006

0211

NOTICE: If the film image is less clear than this notice, it is due to the quality of the document being filmed

SECTION 9

CONTACT FOR FOLLOW-UP INFORMATION

9.1 In case we need some follow-up information on the questionnaire responses, who should we contact?

(Provide the name, title, mailing address, and telephone number of this contact person.)

Name: JOHN W. WEN Title: ENVIRONMENTAL SUPERVISOR

Company: Agrico Chemical Co

Street Address: Uncle Sam Plant

City: Uncle Sam State: LA Zip: 70792

Telephone Number: (504) 562-3501

YOU HAVE NOW COMPLETED THE QUESTIONNAIRE.
PLEASE FOLLOW THE INSTRUCTIONS BELOW FOR RETURNING IT TO EPA.

Instructions for RETURNING the Questionnaire:

a. *For your records, make a COPY of the:*
   - *Questionnaire,*
   - *Facility Site Map,*
   - *Processing/Waste Management Schematic, and*
   - *Extra Question Sets that you completed (if any).*

b. *Put the questionnaire, facility site map, processing/waste management schematic, and extra question sets that you completed (if any) in the postage-paid return envelope. If you have misplaced the return envelope, call the SURVEY HELPLINE (1-800-635-8850) for a replacement.*

c. *Tape the flap on the return envelope prior to mailing in order to prevent accidental opening (and the possible loss of parts of your response) while in the mail.*

MW2F 006

8.17 **Describe the type(s) of material and estimate the relative amount of this material (e.g., 100% slag) in these waste piles on December 31, 1988.**

_____

_____

_____

_____

_____

_____

8.18 **Are there any active, inactive, or closed RESIDUALS STOCKPILES at this facility (excluding those covered in Section 6)?**
(Circle one number.)

01 Yes --------> **How many?** _____
02 No *(SKIP TO QUESTION 8.25 ON NEXT PAGE)*

8.19 **List these residuals stockpiles using the unique identifiers from the FACILITY SITE MAP prepared for Section 1.**

_____	_____	_____	_____
_____	_____	_____	_____
_____	_____	_____	_____
_____	_____	_____	_____

8.20 **What quantity of material (on a wet-weight basis) did these residuals stockpiles receive in 1988 in total?**
(If none, enter "0" for the quantity. Select one of the two specified units of measure.)

Quantity of material received: _____ (short tons) **OR** _____ (cubic yards)

NOTICE: If the film image is less clear than this notice, it is due to the quality of the document being filmed

MW2F 006

0213

8.21 What was the COMBINED surface area of the bases of these residuals stockpiles on December 31, 1988?
(Select one of the two specified units of measure.)

Combined surface area: _____ square feet **OR** _____ acres

8.22 What was the AVERAGE height of these residuals stockpiles on December 31, 1988?
(Select one of the two specified units of measure.)

Average height: _____ feet **OR** _____ yards

8.23 What was the CUMULATIVE amount of material in these residuals stockpiles on December 31, 1988?
(Report the quantity in place using one of the two specified units of measure.)

Cumulative amount of material: _____ short tons **OR** _____ cubic yards

8.24 Describe the type(s) of material and estimate the relative amount of this material (e.g., 100% air pollution control dust) in these residuals stockpiles on December 31, 1988.

_____

_____

_____

_____

_____

_____

8.25 Are there any other active, inactive, or closed LANDFILLS at this facility (excluding those covered in Section 6)?
(Circle one number.)

01 Yes --------> How many? _____

(02) No *(SKIP TO QUESTION 8.33 ON PAGE 8-8)*

NOTICE: If the film image is less clear than this notice, it is due to the quality of the document being filmed

MW2F 006

0214

8.26 List these landfills using the unique identifiers from the FACILITY SITE MAP prepared for Section 1.

_____ _____ _____ _____

_____ _____ _____ _____

_____ _____ _____ _____

_____ _____ _____ _____

8.27 What quantity of material (on a wet-weight basis) did these landfills receive in 1988 in total?

(If none, enter "0" for the quantity. Select one of the two specified units of measure.)

Quantity of material received: _____ short tons **OR** _____ cubic yards

8.28 What was the COMBINED surface area of these landfills on December 31, 1988?

(Select one of the two specified units of measure.)

Combined surface area: _____ square feet **OR** _____ acres

8.29 What was the AVERAGE depth of these landfills on December 31, 1988?

(Select one of the two specified units of measure.)

Average depth: _____ feet **OR** _____ yards

8.30 What was the REMAINING useful life of these landfills on December 31, 1988 in total?

Remaining useful life: _____ years

8.31 What was the CUMULATIVE amount of material in these landfills on December 31, 1988?

(Report the quantity in place using one of the two specified units of measure.)

Cumulative amount of material: _____ short tons **OR** _____ cubic yards

NOTICE: If the film image is less clear than this notice, it is due to the quality of the document being filmed

MW2F 006

02 15

8.32 Describe the type(s) of material and estimate the relative amount of this material (e.g., 10% plant trash, 10% baghouse bags, 80% wastewater treatment plant sludge) in these landfills on December 31, 1988.

_____

_____

_____

_____

_____

_____

8.33 Are there any other active, inactive, or closed UNDERGROUND INJECTION WELLS at this facility (excluding those covered in Section 6)?
(Circle one number.)

01 Yes --------> **How many?**_____

(02) No *(SKIP TO QUESTION 8.40 ON NEXT PAGE)*

8.34 List these underground injection wells using the unique identifiers from the FACILITY SITE MAP prepared for Section 1.

_____ _____ _____ _____

_____ _____ _____ _____

_____ _____ _____ _____

_____ _____ _____ _____

8.35 What quantity of liquids did these underground injection wells receive in 1988 in total?
(If none, enter "0" for the quantity.)

Quantity of liquids received: _____ gallons

NOTICE: If the film image is less clear than this notice, it is due to the quality of the document being filmed

MW2F 006

0216

8.36 What was the AVERAGE injection depth of these underground injection wells on December 31, 1988?

(Select one of the two specified units of measure.)

Average injection depth: _____ feet **OR** _____ yards

8.37 What was the REMAINING useful life of these underground injection wells on December 31, 1988 in total?

Remaining useful life: _____ years

8.38 What was the CUMULATIVE amount of liquids received by these underground injection wells as of December 31, 1988?

Cumulative amount of liquids: _____ gallons

8.39 Describe the type(s) of liquids and estimate the relative amount of this material (e.g., 100% contact cooling water) in these underground injection wells on December 31, 1988.

_____

_____

_____

_____

_____

_____

8.40 Are there any other active, inactive, or closed GYPSUM STACKS at this facility (excluding those covered in Section 6)?

(Circle one number.)

01 Yes --------> **How many?** _____

(02) No *(SKIP TO QUESTION 8.48 ON PAGE 8-11)*

NOTICE: If the film image is less clear than this notice, it is due to the quality of the document being filmed

MW2F 006

0217

8.41 List these gypsum stacks using the unique identifiers from the FACILITY SITE MAP prepared for Section 1.

_____ _____ _____ _____

_____ _____ _____ _____

_____ _____ _____ _____

_____ _____ _____ _____

8.42 What quantity of material (on a wet-weight basis) did these gypsum stacks receive in 1988 in total?

(If none, enter "0" for the quantity. Select one of the two specified units of measure.)

Quantity of material received: _____ (short tons) **OR** _____ (cubic yards)

8.43 What was the COMBINED surface area of the bases of these gypsum stacks on December 31, 1988?

(Select one of the two specified units of measure.)

Combined surface area: _____ square feet **OR** _____ acres

8.44 What was the AVERAGE height of these gypsum stacks on December 31, 1988?

(Select one of the two specified units of measure.)

Average height: _____ feet **OR** _____ yards

8.45 What was the REMAINING useful life of these gypsum stacks on December 31, 1988 in total?

Remaining useful life: _____ years

8.46 What was the CUMULATIVE amount of solids in these gypsum stacks on December 31, 1988?

(Report the quantity in place using one of the two specified units of measure.)

Cumulative amount of solids: _____ (short tons) **OR** _____ (cubic yards)

NOTICE: If the film image is less clear than this notice, it is due to the quality of the document being filmed

MW2F 006

0218

8.47 Describe the type(s) of material and estimate the relative amount of this material (e.g., 100% phosphogypsum) in these gypsum stacks on December 31, 1988.

_____

_____

_____

_____

_____

_____

8.48 Are there any other active, inactive, or closed MINES, QUARRIES, OR STOPES at this facility that are used for waste disposal (excluding those covered in Section 6)?
(Circle one number.)

01 Yes --------> **How many?** _____

(02) No *(SKIP TO SECTION 9)*

8.49 List these mines, quarries, or stopes using the unique identifiers from the FACILITY SITE MAP prepared for Section 1.

_____	_____	_____	_____
_____	_____	_____	_____
_____	_____	_____	_____
_____	_____	_____	_____

8.50 What quantity of waste material (on a wet-weight basis) did these mines, quarries, or stopes receive in 1988 in total?
(If none, enter "0" for the quantity. Select one of the two specified units of measure.)

Quantity of material received: _____ (short tons) **OR** _____ (cubic yards)

8.51 What was the REMAINING useful life of these mines, quarries, or stopes on December 31, 1988 in total?

Remaining useful life: _____ years

NOTICE: If the film image is less clear than this notice, it is due to the quality of the document being filmed

MW2F 006

0219

8.52 What was the CUMULATIVE amount of waste material in these mines, quarries, or stopes on December 31, 1988?

(Report the quantity in place using one of the two specified units of measure.)

Cumulative amount of material: _____ **OR** _____

short tons cubic yards

8.53 Describe the type(s) of waste material and estimate the relative amount of this material (e.g., 50% mill tailings, 40% overburden, and 10% sludge) in these mines, quarries, or stopes on December 31, 1988.

_____

_____

_____

_____

_____

_____

NOTICE: If the film image is less clear than this notice, it is due to the quality of the document being filmed

MW2F 006

0220

FACILITY NOTES

Question Number(s)	Notes, comments, etc.
1 ~~4~~ 5 2.9	as P205
2 ~~4~~ 5 2.9	(as P205)
3 ~~4~~ 5 2.2	(4 plants)

NOTICE: If the film image is less clear than this notice, it is due to the quality of the document being filmed

MW2F 006

0221

FACILITY NOTES

Question Number(s)	Notes, comments, etc.
	[redacted]
[illegible]	
[illegible]	[illegible] <4 mg/kg
[illegible]	[illegible] <7.5 mg/kg
[illegible]	[illegible] <50 mg/kg
[illegible]	[illegible] <1 mg/kg
[illegible]	[illegible] <5 mg/kg
[illegible]	[illegible] <3 mg/kg
[illegible]	1.2-6.0
[illegible]	1-2 feet
7.1	13 MSL
7.2	3 MSL

NOTICE: If the film image is less clear than this notice, it is due to the quality of the document being filmed

MW2F 006

0222

FACILITY NOTES

Question Number(s)	Notes, comments, etc.

NOTICE: If the film image is less clear than this notice, it is due to the quality of the document being filmed

MW2F 006

0223

FACILITY NOTES

Question Number(s)	Notes, comments, etc.

NOTICE: If the film image is less clear than this notice, it is due to the quality of the document being filmed

MW2F 006

0224

NOTICE: If the film image is less clear than this notice, it is due to the quality of the document being filmed

MW2F 006

0225

PA 045

Agrico

A Division of
Freeport-McMoRan Resource Partners

Agrico Chemical Company
Highway 44
Uncle Sam, Louisiana 70792-9999

504/562-3501

April 10, 1989

CERTIFIED MAIL - RETURN RECEIPT REQUESTED

CER
Research Triangle Institute
P.O. Box 12194
Research Triangle Park, N.C. 27709-2194

RE: Agrico Chemical - Uncle Sam Plant
National Survey of Solid Waste
from Mineral Processing Facilities

Sir:

Agrico Chemical - Uncle Sam Plant, is hereby submitting the National Survey of Solid Waste from Mineral Processing Facilities as required by the U.S. Environmental Protection Agency.

Should you have further questions regarding to this survey, please contact me at (504) 562-3501, ext. 289.

Sincerely,

John W. Wen
Environmental Supervisor

JWW/jz
Enclosure

NOTICE: If the film image is less clear than this notice, it is due to the quality of the document being filmed

MW2F 006

0226

PA 045

FACILITY NOTES (Attachment 1)

Phosphoric Acid Plant (Phosphogypsum)

2.3 The phosphogypsum generated is primarily calcium sulfate di-hydrate from the digestion of phosphate rock, but it may also include solids generated from the cleanout of tanks and process euqipment and pollution control equipment. These solids are co-managed with the phosphogypsum.

2.6 There are two identical trains (A&B) in the phosphoric acid plant. It
2.9 produces a total of 2.500 tons per day of phosphoric acid (based on 100% P_2O_5)

2.15

Waste Comp. Code	Avg. Conc.	Unit for Avg. Conc.
W042	<5	mg/kg.
W043	3.8	mg/kg.
W044	<1	mg/kg.
W046	1.7	mg/kg.
W047	<20	mg/kg.
W048	1	mg/kg
W049	28	mg/kg
W069	0.20	percent
W009	0.10	percent
~~W054 (as P_2O_5)~~	1.18	percent
W071	51.1	percent

2.31 Refer to 2.3

We are also alloved to dispose a small quantity of Iodine impregnated waste resin from the SiF_4 gas production plant in the gypsum management area. Waste generated by our phosphogypsum pilot plant are also permitted to be disposed in the designated waste storage area. In fiscal July 1987 through July 1988, a total of 873 tons of process related wastes were disposed at the gypsum management site.

NOTICE: If the film image is less clear than this notice, it is due to the quality of the document being filmed

MW2F 006

0227

SEC 2(2 5)

Phosphoric Acid Plant (Process Waste Water)

2.3 Major uses of water in the processing of phosphate rock to produce phosphate fertilizers are gypsum transport, phosphoric acid concentration, phosphoric acid temperature control and cooling, including barometric condensers and flash coolers. Both as a matter of water conservation and to ensure compliance with effluent limitation guidelines or other applicable regulations promulgated by EPA pursuant to the Clean Water Act, water use at phosphate fertilizer facilities is carefully and elaborately controlled. Generally, across the industry, well over 90% of the water used is recycled. Because production and cooling are primary uses, water is generally recycled through cooling ponds. But at this facility, once through cooling water drawn from the Mississippi River was used. However, gypsum transport is still a primary water use. An elaborate water recycling ditch system permits gypsum transport water to drain from the gypsum stack back to the plant.

In addition to production and gypsum transport, water is used for a number of other purposes at facilities processing phosphate rock into phosphate fertilizer materials. Major uses of water at such facilities include the following:

a. Rock grinding.
b. Product and raw materials. Tank clean-out.
c. Process equipment clean-out.

Water may also be used in equipment such as scrubbers, used for the control of air pollution. Generally, the water is recycled in the plant's overall water recycling system. Thus water employed in these uses may be drawn from the plant's water recycling system. Alternatively, make-up water may be added to the recirculating system through one of these uses.

2.11 At this facility, a total of 4000 GPM of process waste water was recycled into the Phosphoric Acid Plant. Approximately 2400 GPM was used to reslurry gypsum so that they can be transported by pipeline to the waste management area. The remainder 1600 GPM was used as filter cake wash and eventually approximately half will be ended up as product phosphoric acid.

Out of the 2400 GPM of gypsum slurry water, which can be translated to 1,071,360,000 gallons per year, approximately (or 800,000,000 gallons) will be recycled back to the plant whereas the rest will remain entrapped in the phosphogypsum cake and remained in the phosphogypsum management site.

75% was water

2.26 a. As explained in 2.11, 1,785,~~650,000~~ 00,000 gallons of water is equivalent to 4000 GPM that were recycled through the waste management unit into the phosphoric acid unit for reuse. This recycle water consists of active water returned from the gypsum impoundment area. This active water system is a combination of waste water from the Uranium Recovery Plant, waste water from the Sulfuric Acid Plant, and rainfall runoff and decant water from the gypsum impoundment area (both active and inactive).

NOTICE: If the film image is less clear than this notice, it is due to the quality of the document being filmed

MW2F 006

0228

PA 045

FACILITY NOTES

Uranium Recovery Plant

2.3 Process waste water resulted from the recovery of Uranium from phosphoric acid includes water drainage from inside and outside of the curbed process area. Water maybe used in the clean-up of product and rav material storage tanks. Water may also be used to clean-up process equipment used in the recovery of Uranium from phosphoric acid. The water used also carries solid materials, this stream was used to carry solids precipitated from the phosphoric acid in the primary circuit settlers that were returned to the gypsum management site through the gypsum reslurry tank in the Phosphoric Acid Plant.

2.11 Refer to 2.3 for complete explanation. This total stream includes all the water used and water removed from the Uranium Recovery Plant.

2.15 The characteristics of this special waste were listed in our June 18, 1982 Permit Application (NPDES) for the Uranium Recovery Plant. They represent the maximum daily value of each waste cited.

Waste Comp. Code	Avg. Conc.	Unit of Avg. Conc.
W036	6.52	Mg/l
W038	9.2	Mg/l
W047	<0.07	Mg/l

2.23 Provided it meets applicable NPDES permit limits, the stream that contains water from inside and outside the curbed process area is permitted to be discharged without treatment through the NPDES - permitted Outfall 001. Water from inside the curbed area is mainly process water and some rainfall run-off that contains phosphate, sulfate and other recoverable impurities. It seldom would meet applicable NPDES limits. It is routinely routed to the process water system in the nearby Phosphoric Acid Plant for reuse. This is authorized by the NPDES Permit. Water from outside the curbed area may contain process water and recoverable impurities, in which case it is also routed to the process water system in the Phopshoric Acid Plant; or it may meet applicable permit limits, in which case it may be discharged through Outfall 001 without treatment, all as provided for in the facility's NPDES Permit.

2.26 (C) As explained in the facility note of Attachment 2 under Phosphoric Acid Plant waste water system, part of this water was recycled into the Phosphoric Acid Plant returns to the gypsum management site as gypsum slurry water.

notice, it is due to the quality of the document being filmed

MW2F 006

0229

The Uranium Recovery Plant is actually an integral part of the Phosphoric Acid Plant. 30% virgin phosphoric acid, produced from the digestion of phosphate rock with sulfuric acid in the Phosphoric Acid Plant is sent to the Uranium Recovery Plant so that the Uranium content could be phsically extracted from the virgin acid. The acid after depleted of it's Uranium content is returned to the Phosphoric Acid Plant for further processing into fertilizer grade acid. During this process, the vaste water generated in the Uranium Recovery Plant will be totally recycled into the Phosphoric Acid Plant through the active water system. Solids generated in the Uranium recovery process are either returned to the Phosphoric Acid Plant or discharged through the gypsum re-slurry tank to the gypsum vaste management site.

NOTICE: If the film image is less clear than this notice, it is due to the quality of the document being filmed

MW2F 006

0230

PA 045

SEC 21(3 5)

FACILITY NOTES

Sulfuric Acid Plant

2.3 Water may be used in the clean out of product and raw material storage tanks including sulfur and sulfuric acid tanks. Water may also be used to clean out process equipment used in the production of sulfuric acid. Generally, the water used also carries solid materials. Although, the majority of solids generated in the cleanout of the process equipment and storage tank is conveyed to management area by water, the nature of these solids may require that some cleanout be accomplished by hand. Where this is necessary, the cleanout solids are conveyed to the same management area they would have reached had they been entrained in the water.

2.4 There are a total of four sulfuric acid plants at this facility. "A", "B", and "C" trains are single absorption units. They were started up in 1968. Whereas "D" train is a never double absorption plant which was started up in 1974.

2.6 The production capacity shown is for one individual train. It is the average of all four trains.

NOTICE: If the film image is less clear than this notice, it is due to the quality of the document being filmed

MW2F 006

0231

NOTICE: If the film image is less clear than this notice, it is due to the quality of the document being filmed

FACILITY NOTES

Re-Use Phosphogypsum Pilot Plant

2.2 The Phosphogypsum Pilot Plant was constructed in 1988. The plant was only in operational for approximately 15 days in 1988. During this period, the total operating time per day was 8 hours. This unit is not a full production Pilot Plant, but a demonstration plant. The maximum aggregate production rate was 2600 lbs./hr. However, during 1988, this production rate was never attained.

2.15 No samples of gas scrubber blowdown was taken or analyzed in 1988. However, there are plans to do so in 1989.

2.29 The scrubber blowdown is totally recycled or consumed in the Phosphate Rock Grinding Plant.

MW2F 006

0232

PA 045

FACILITY NOTES

Phosphoric Acid Plant (Phosphate Rock Grinding Plant)

3.12 No residue was generated in this process because all the product generated in this unit is fed into the Phosphoric Acid Production Plant.

3.13 Refer to 3.12.

3.22 Refer to 3.12.

3.6 There are two identical Phosphate Rock Grinding Plants located at this facility. They each have operating capacity of approximately 2,500 tons per day.

The two unit was originally constructed to handle dry rock grinding and in 1978, they were both converted and operating as a Wet Rock Grinding Plant.

NOTICE: If the film image is less clear than this notice, it is due to the quality of the document being filmed

MW2F 006

0233

PA 045

FACILITY NOTES

Inactive Pond Water

5.5 The total amount of accumulated solid in this surface impoundment on December 31, 1988 is unknown. However, the only solid present in this impoundment area is phosphogypsum solid washed down from the side slopes of the management site when we have heavy rainfall. This impoundment is now used strictly to collect rainwater runoff from areas in the phosphogypsum storage site that presently not activated or in use.

5.6 Since the inactive pond system was designated for in 1988, we can only estimate that the amount of gypsum accumulated in this impoundment through inactive pond water TSS concentration.

5.18

Waste Comp. Code	Avg. Conc.	Units for Avg. Conc.
W049	2.3	mg/l
~~W054~~	~~2900~~	~~mg/l~~
W055	2.8	PCi/ml
W059	0.01	PCi/ml
W062	3.7	mg/l
~~W069~~	~~2200~~	~~mg/l~~
~~W071~~	~~2060~~	~~mg/l~~
~~W007~~	~~17.2~~	~~mg/l~~
W027	<0.05	mg/l
W037	<0.05	mg/l
W044	<0.01	mg/l
W046	<0.05	mg/l

NOTICE: If the film image is less clear than this notice, it is due to the quality of the document being filmed

MW2F 006

0234

PA 045

FACILITY NOTES

Inactive Pond Water

5.5 The total amount of accumulated solid in this surface impoundment on December 31, 1988 is unknown. However, the only solid present in this impoundment area is phosphogypsum solid washed down from the side slopes of the management site when we have heavy rainfall. This impoundment is now used strictly to collect rainwater runoff from areas in the phosphogypsum storage site that presently not activated or in use.

5.6 Since the inactive pond system was designated for in 1988, we can only estimate that the amount of gypsum accumulated in this impoundment through inactive pond water TSS concentration.

5.18

Waste Comp. Code	Avg. Conc.	Units for Avg. Conc.
W049	2.3	mg/l
~~W054~~	~~2980~~	~~mg/l~~
W055	2.8	PCi/ml
W059	0.01	PCi/ml
W062	3.7	mg/l
~~W069~~	~~2290~~	~~mg/l~~
~~W071~~	~~2060~~	~~mg/l~~
~~W087~~	~~17.2~~	~~mg/l~~
W027	<0.05	mg/l
W037	<0.05	mg/l
W044	<0.01	mg/l
W046	<0.05	mg/l

NOTICE: If the film image is less clear than this notice, it is due to the quality of the document being filmed

MW2F 006

0235 L