WMH003829

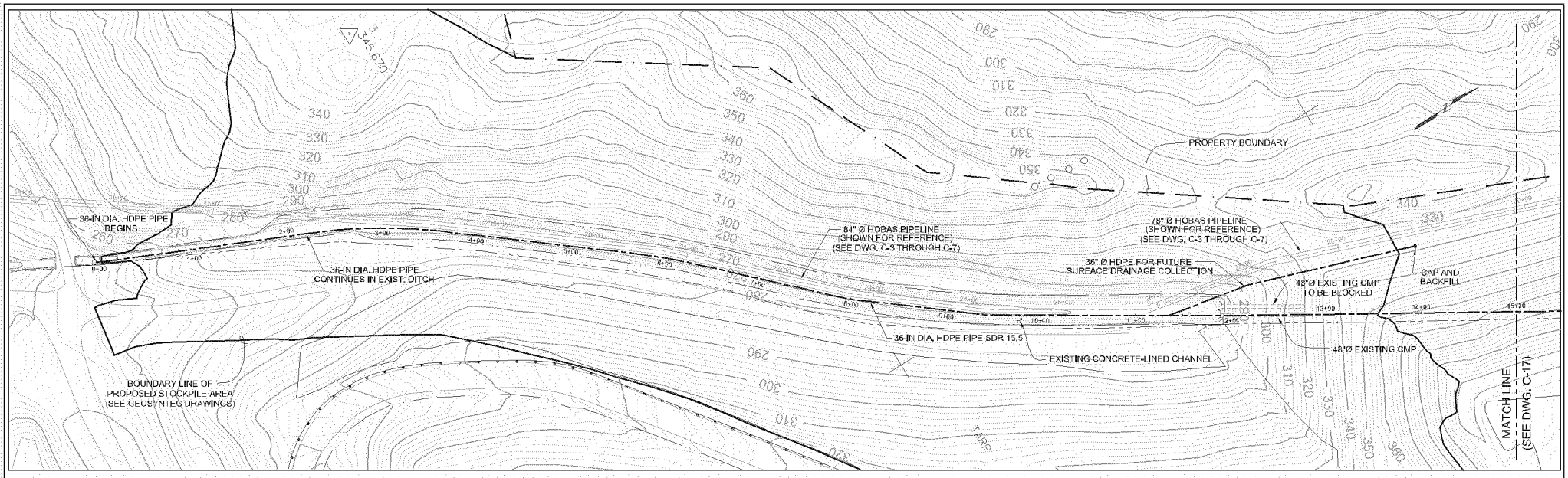

NOTES:

1. THE 36-INCH HDPE INVERT LOCATION AND GRADE IS APPROXIMATE AND BASED ON THE ESTIMATED LOCATION OF THE 48-INCH CMP AND ALIGNMENT OF THE EXISTING DRAINAGE CHANNEL. THE DRAINAGE CHANNEL PROFILE IS DEPICTED ON A DESIGN DRAWING BY KWOCK AND ASSOCIATES, 5 OF 20, 11/4/91, FROM THE PLAN SET TITLED, "WAIMANALO GULCH SANITARY LANDFILL, DRAINAGE CHANNEL EXTENSION." THE CONTRACTOR WILL NEED TO CONFIRM THE 36-INCH HDPE INVERT LOCATION AND GRADE SHOWN BASED ON FIELD SURVEYS OF THE 48-INCH CMP AND EXISTING CONCRETE-LINED CHANNEL.
2. PIPE INVERT SHALL CONFORM TO THE EXISTING CHANNEL INVERT GRADES AND TO SECTION "B" ON DWG. C-20 AND 36-INCH HDPE PIPE SECTION ON DWG. C-11.

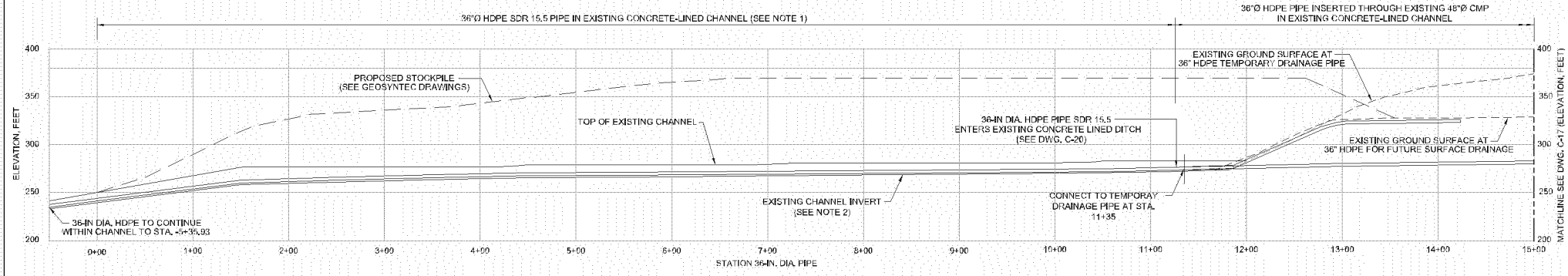

SCALE, FEET

WASTE MANAGEMENT

Oakland California GEI Consultants

REV.	DESCRIPTION	BY	APP.	DATE
1	ISSUED FOR CONSTRUCTION			04-12-10
0	ISSUED FOR CONSTRUCTION			01-13-10

DATE: 04-12-10

DESIGNED BY:	A. TLABAR
CHECKED BY:	C. ANDERSON
DRAWN BY:	P. MORRISON
CAD FILE NAME:	C-16.dwg
PROJECT NO. 07018-1	SCALE: AS SHOWN

WAIMANALO GULCH LANDFILL
WESTERN SURFACE WATER DRAINAGE PROJECT
EWA BEACH, OAHU, HAWAII

PLAN AND PROFILE
TEMPORARY DRAINAGE
STA. 0+00 TO STA. 15+00

DATE: 04-12-10

DRAWING NO. C-16

C-16 04-12-10.DWG

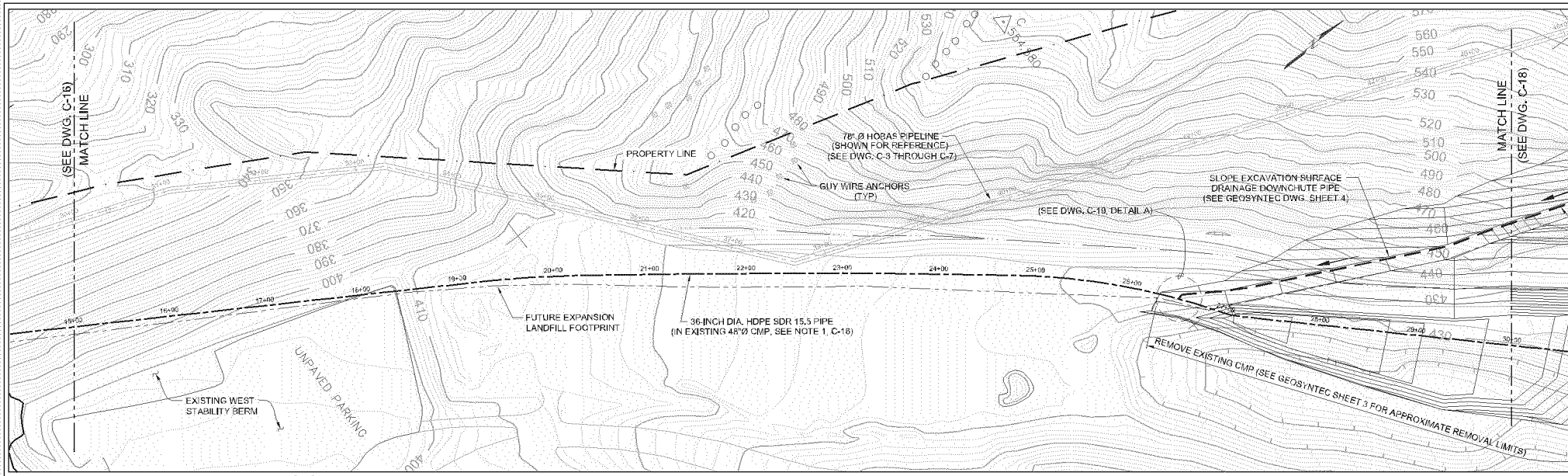

NOTES:

1. THE 36-INCH HDPE INVERT LOCATION AND GRADE IS APPROXIMATE AND BASED ON THE ESTIMATED LOCATION OF THE 48-INCH CMP AND ALIGNMENT OF THE EXISTING DRAINAGE CHANNEL. THE DRAINAGE CHANNEL PROFILE IS DEPICTED ON A DESIGN DRAWING BY KWOCK AND ASSOCIATES, 5 OF 20, 11/4/91, FROM THE PLAN SET TITLED, "WAIMANALO GULCH SANITARY LANDFILL, DRAINAGE CHANNEL EXTENSION." THE CONTRACTOR WILL NEED TO CONFIRM THE 36-INCH HDPE INVERT LOCATION AND GRADE SHOWN BASED ON FIELD SURVEYS OF THE 48-INCH CMP AND EXISTING CONCRETE-LINED CHANNEL.
2. REFER TO GEOSYNTEC DRAWING SHEET NO. 3 FOR CELL E6 GRADING
3. REFER TO GEOSYNTEC SHEET 3 FOR PROPOSED CELL E6 BASE GRADES.

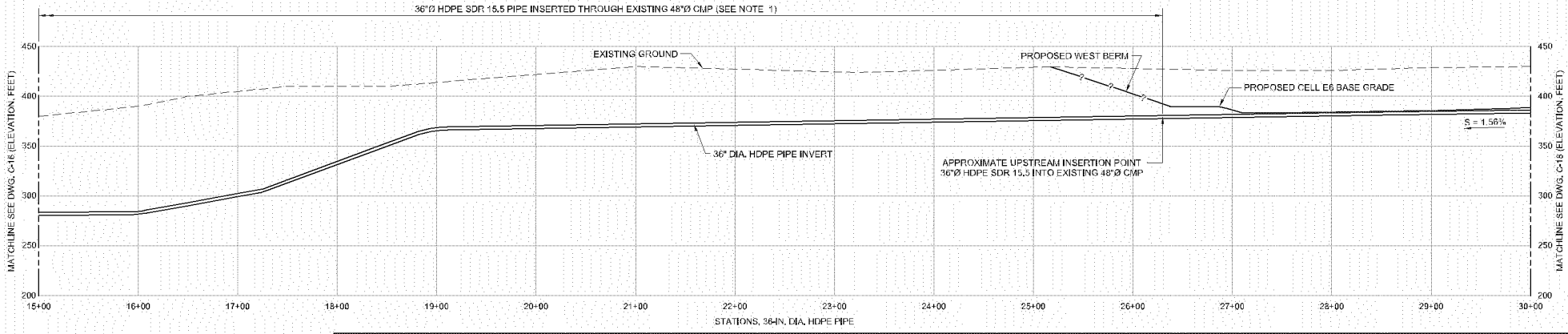

SCALE, FEET

WASTE MANAGEMENT

Oakland California GEI Consultants

REV.	DESCRIPTION	BY	APP.	DATE
0	ISSUED FOR CONSTRUCTION			01-13-10

DATE: 01-13-10

DESIGNED BY:	A. TLABAR
CHECKED BY:	C. ANDERSON
DRAWN BY:	P. MORRISON
CAD FILE NAME:	C-17.dwg
PROJECT NO. 07018-1	SCALE: AS SHOWN

WAIMANALO GULCH LANDFILL
WESTERN SURFACE WATER DRAINAGE PROJECT
EWA BEACH, OAHU, HAWAII

PLAN AND PROFILE
TEMPORARY DRAINAGE
STA. 15+00 TO STA. 30+00

DATE: 01/13/10

DRAWING NO. C-17

C-17 01/13/10 PM

WMH003830

WMH003831

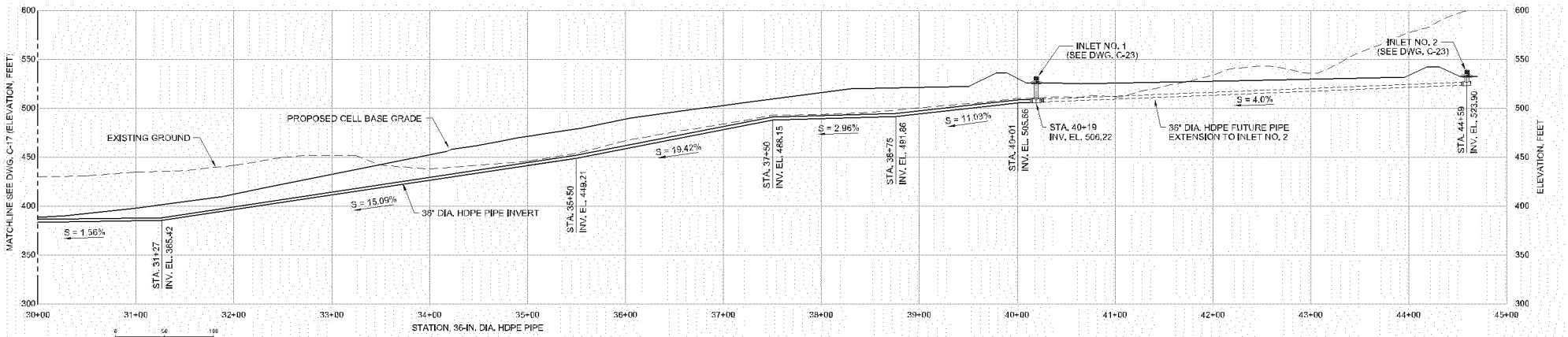

NOTE:

1. THE LOCATION OF THE 36-INCH HDPE PIPE SHOWN IN THE AREA OF CELLS E5 AND E8 MAY NEED TO BE FIELD-ADJUSTED DURING CONSTRUCTION BASED ON THE ACTUAL LOCATION OF THE 48-INCH CMP. CONTRACTOR SHALL SUBMIT / CONFIRM FINAL LOCATION/LAYOUT WITH THE ENGINEER.
2. LOCATION OF INLET MAY BE FIELD ADJUSTED TO MINIMIZE EXCAVATION IN INLET AREA.

WASTE MANAGEMENT

Oakland California GEI Consultants

WILLIAM A. RETTGER, JR. LICENSED PROFESSIONAL ENGINEER No. 12473-C HAWAII, U.S.A.

DATE: 01-13-10

REV.	DESCRIPTION	BY	APP.	DATE
0	ISSUED FOR CONSTRUCTION			01-13-10

DESIGNED BY:	A. TLABAR
CHECKED BY:	C. ANDERSON
DRAWN BY:	P. MORRISON
CAD FILE NAME:	C-18.dwg
PROJECT NO. 07015-1	SCALE: AS SHOWN

WAIMANALO GULCH LANDFILL
WESTERN SURFACE WATER DRAINAGE PROJECT
EWA BEACH, OAHU, HAWAII

PLAN AND PROFILE
TEMPORARY DRAINAGE
STA. 30+00 TO STA. 45+00

DATE: 01/13/10

DRAWING NO. C-18

C-18 01/13/10 PPM

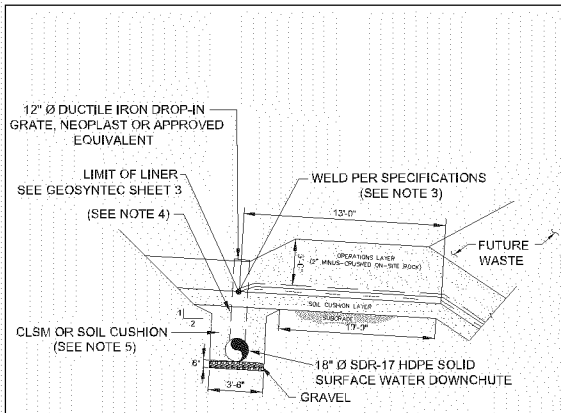

SECTION - INLET (B)

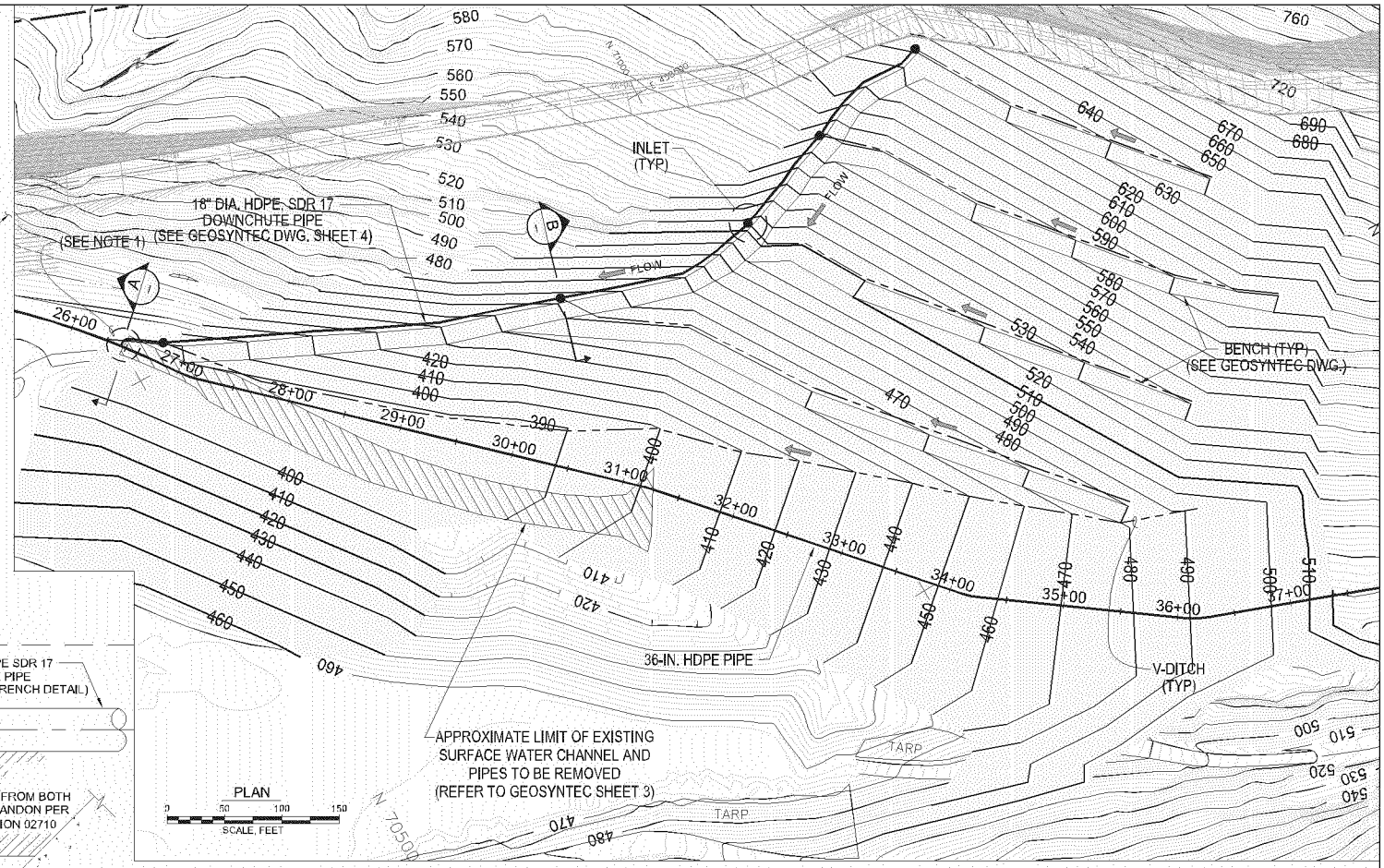

PLAN

0 50 100 150
SCALE, FEET

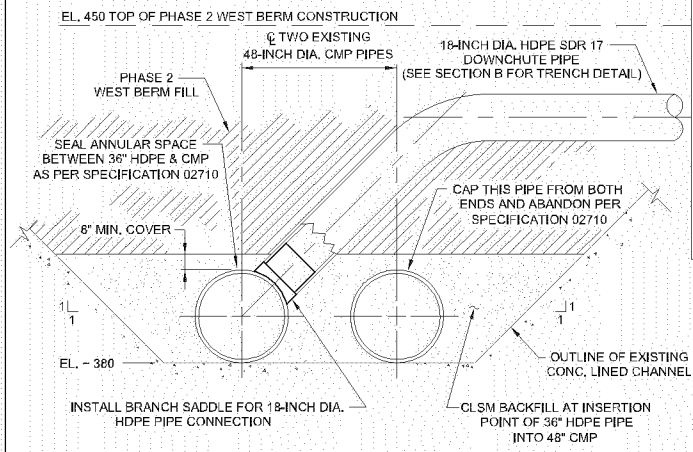

SECTION - INLET DOWNCHUTE CONNECTION (A)

0 2 4
SCALE, FEET

NOTES:

1. IN THIS AREA, CONTRACTOR SHALL PERFORM GRADING AS NECESSARY TO ALLOW FOR EQUIPMENT ACCESS DURING HDPE PIPE INSERTION INTO EXISTING 48" DIA. CMP. ALL TEMPORARY SLOPES SHALL BE EXCAVATED IN ACCORDANCE WITH OSHA 29 CFR PART 1926 REQUIREMENTS.
2. REFER TO GEOSYNTEC DRAWING SHEET NO. 3 FOR CELL E6 GRADING.
3. AT LOCATION OF INLET GRATE, CONTRACTOR SHALL PENETRATE THE ENCAPSULATED LINER SYSTEM. AT THESE LOCATIONS, ENCAPSULATED LINER SYSTEM SHALL BE RE-ESTABLISHED AFTER INLET IS CONSTRUCTED BY WELDING OR RESEALING PENETRATION OF GEOSYNTHETICS SO GCL DOES NOT BECOME HYDRATED.
4. TO ACCOMMODATE ENCAPSULATED LINER SYSTEM TERMINATION, LOCATION OF 12-INCH DIAMETER DOWNCHUTE RISER AND GRATE MAY BE MOVED. ENCAPSULATION NEEDS TO BE RE-ESTABLISHED (BY WELDING OR RE-SEALING PENETRATION OF GEOSYNTHETICS SO GCL DOES NOT BECOME HYDRATED) BASED ON FINAL LOCATION OF RISER AND GRATE.
5. PIPE SOIL BACKFILL SHALL BE SOIL CUSHION MATERIAL (SEE SECTION 02249) OR CONTROLLED LOW STRENGTH MATERIAL (CLSM). MATERIAL AND CONSTRUCTION METHODS FOR CLSM SHALL MEET A MINIMUM STRENGTH OF 150 PSI, AND OTHER REQUIREMENTS IN HDOT SECTION 314. MEASUREMENT AND PAYMENT FOR CLSM IS INCLUDED AS A PART OF OTHER BID ITEMS; REFER TO SECTION 1025 OF THE CONTRACT DOCUMENTS.

NOTE:
ELEVATIONS ARE APPROXIMATE, FIELD VERIFY PRIOR TO CONSTRUCTION.

WASTE MANAGEMENT

Oakland California GEI Consultants

WILLIAM J. SETTERGREN LICENSED PROFESSIONAL ENGINEER No. 12473-C HAWAII, U.S.A.
DATE: 01-13-10

REV.	DESCRIPTION	BY	APP.	DATE
0	ISSUED FOR CONSTRUCTION			01-13-10

DESIGNED BY:	A. TLABAR
CHECKED BY:	C. ANDERSON
DRAWN BY:	P. MORRISON
CAD FILE NAME:	C-19.dwg
PROJECT NO. 07015-1	SCALE: AS SHOWN

WAIMANALO GULCH LANDFILL
WESTERN SURFACE WATER DRAINAGE PROJECT
EWA BEACH, OAHU, HAWAII

PLAN AND DETAILS
SURFACE DRAINAGE OF EXCAVATION BENCHES

DATE: 01/13/10
DRAWING NO. C-19

C-19 01/12/10 PWM

WMH003832

WMH003833

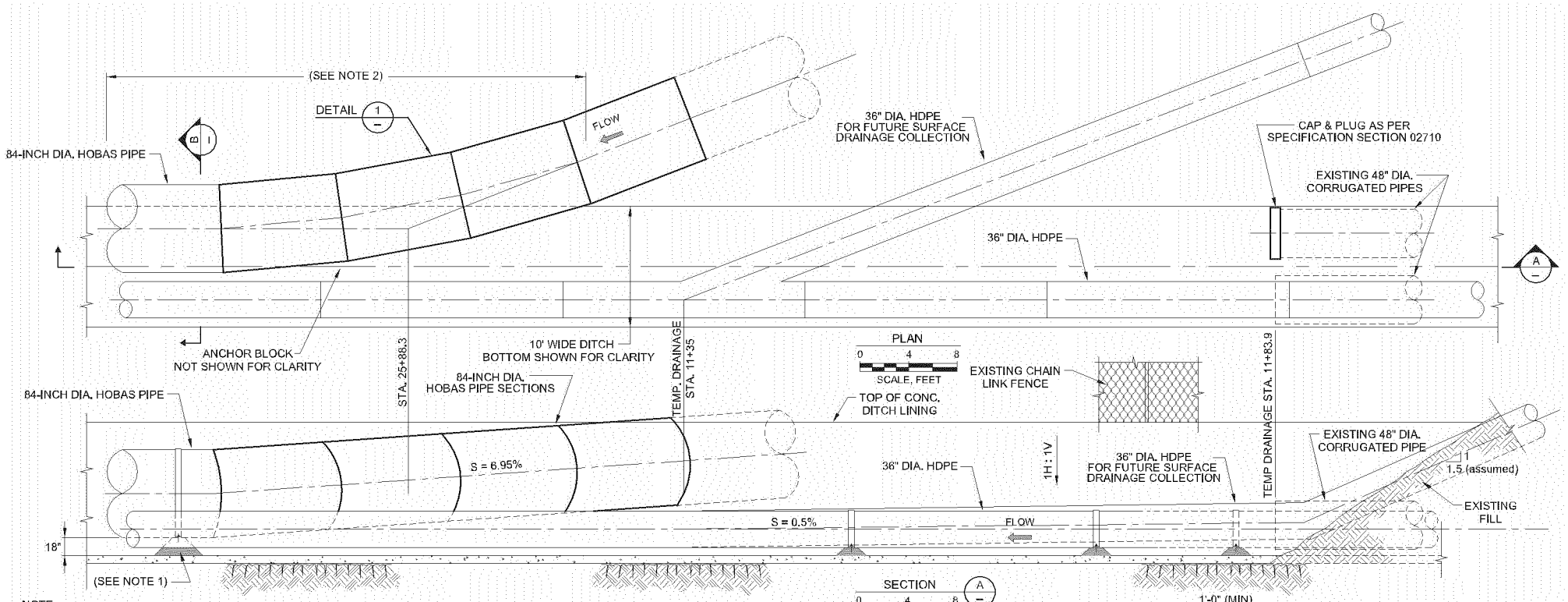

NOTE

1. SADDLE GROUT SHOULD CONSIST OF TYPE II CEMENT WITH AN ADJUSTED WATER, SAND AND CEMENT RATIO SO THAT THE MAXIMUM COMPRESSIVE STRENGTH OF THE GROUT IS 100 PSI.
2. CONTRACTOR TO DEMO EXISTING CONCRETE DITCH AS REQUIRED.
3. TIES SHALL CONSIST OF 1/4-INCH THICK, 4-INCH WIDE GALVANIZED STEEL STRAPS.

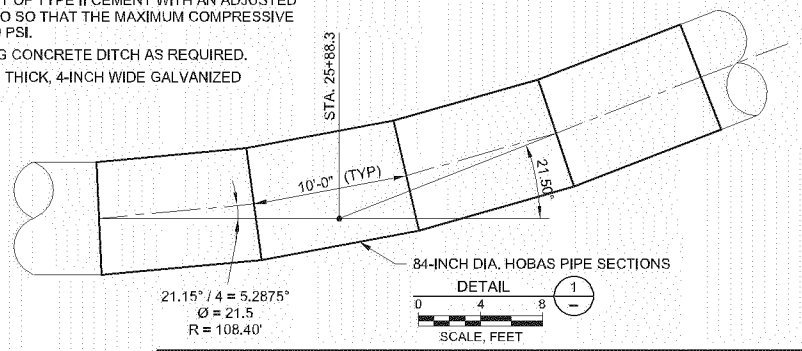

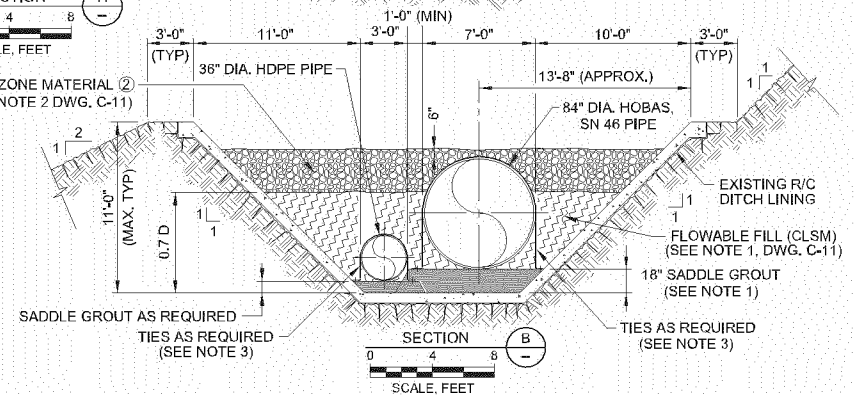

WASTE MANAGEMENT

Oakland California GEI Consultants

REV.	DESCRIPTION	BY	APP.	DATE
1	ISSUED FOR CONSTRUCTION			04-12-16
0	ISSUED FOR CONSTRUCTION			01-13-16

DATE: 04-12-16

DESIGNED BY:	A. TLABAR
CHECKED BY:	C. ANDERSON
DRAWN BY:	P. MORRISON
CAD FILE NAME:	C-20.dwg
PROJECT NO. 07018-1	SCALE: AS SHOWN

WAIMANALO GULCH LANDFILL
WESTERN SURFACE WATER DRAINAGE PROJECT
EWA BEACH, OAHU, HAWAII

84-INCH AND 36-INCH HDPE DETAILS IN CONCRETE LINED CHANNEL

DATE: 04-12-16

DRAWING NO. C-20

C-20 04/13/16 PPM

WMH003834

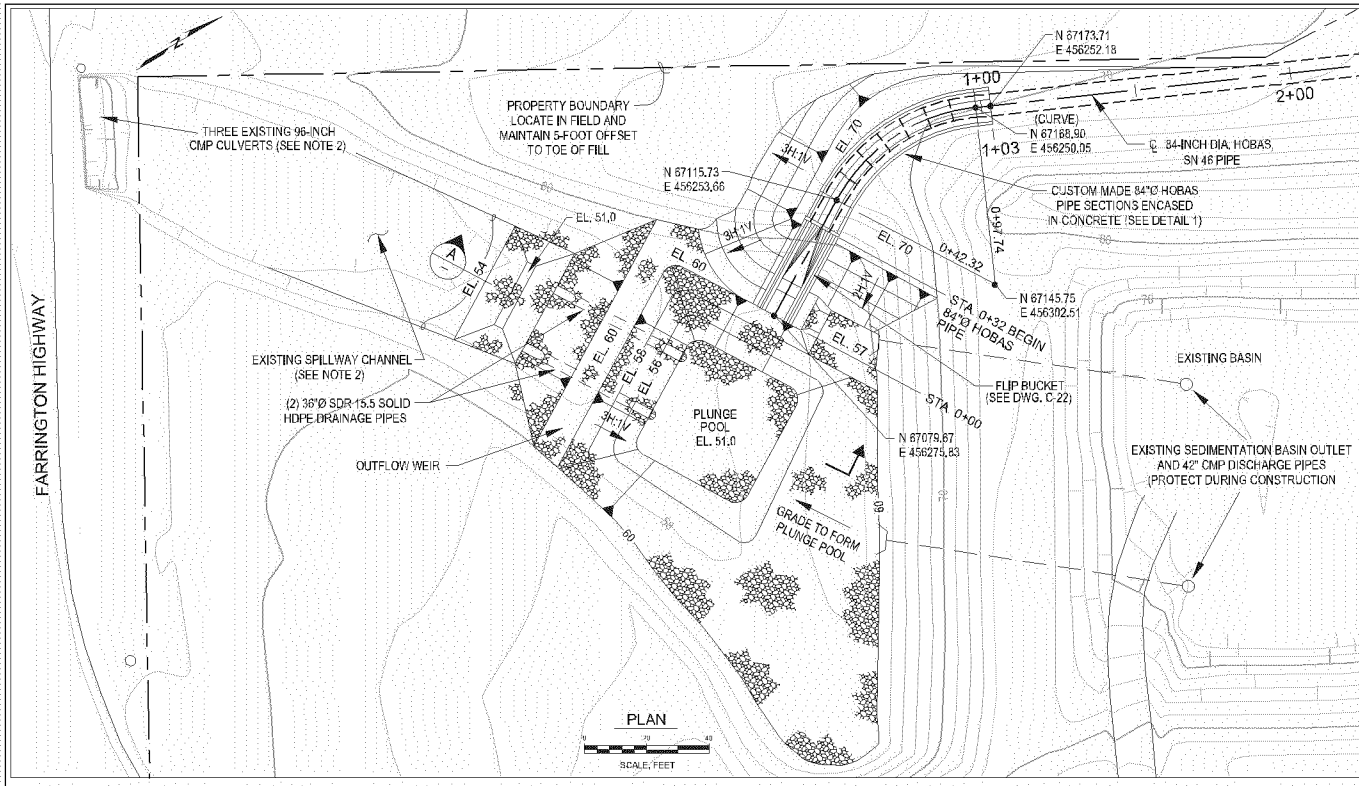

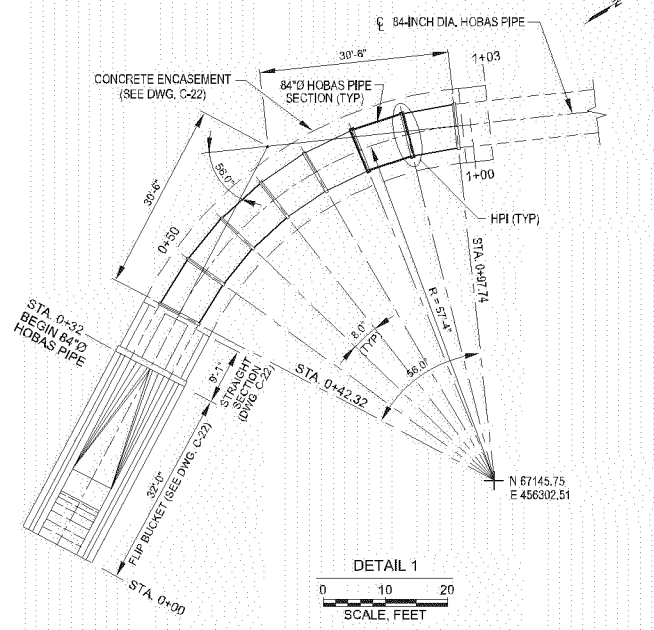

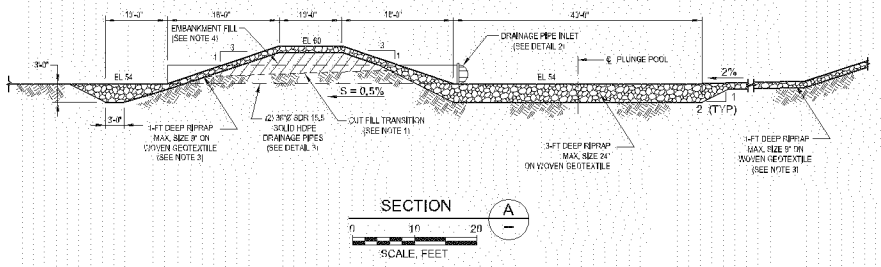

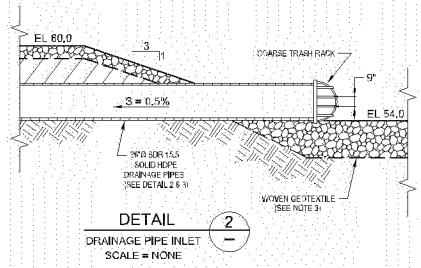

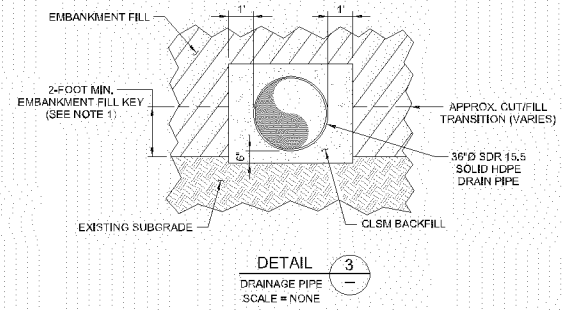

NOTES

1. KEY EMBANKMENT FILL A MINIMUM OF 2-FEET BELOW TRANSITION, OR AS DIRECTED BY ENGINEER.
2. CONTRACTOR SHALL REMOVE LOOSE VEGETATION, SEDIMENT AND DEBRIS FROM DRAINAGE CHANNEL AND CMP CULVERTS.
3. WOVEN GEOTEXTILE SHALL BE MIRAFI 500X, OR APPROVED EQUAL.

WASTE MANAGEMENT

Oakland California GEI Consultants

DATE: 01-13-10

REV.	DESCRIPTION	BY	APP.	DATE
0	ISSUED FOR CONSTRUCTION			01-13-10

DESIGNED BY:	A. TLABAR
CHECKED BY:	C. ANDERSON
DRAWN BY:	P. MORRISON
CAD FILE NAME:	C-21.dwg
PROJECT NO. 07015-1	SCALE: AS SHOWN

WAIMANALO GULCH LANDFILL
WESTERN SURFACE WATER DRAINAGE PROJECT
EWA BEACH, OAHU, HAWAII

DOWNSTREAM STILLING FACILITIES PLAN AND SECTIONS

DATE: 01/15/10

DRAWING NO. C-21

C-21 12-31-99 PM

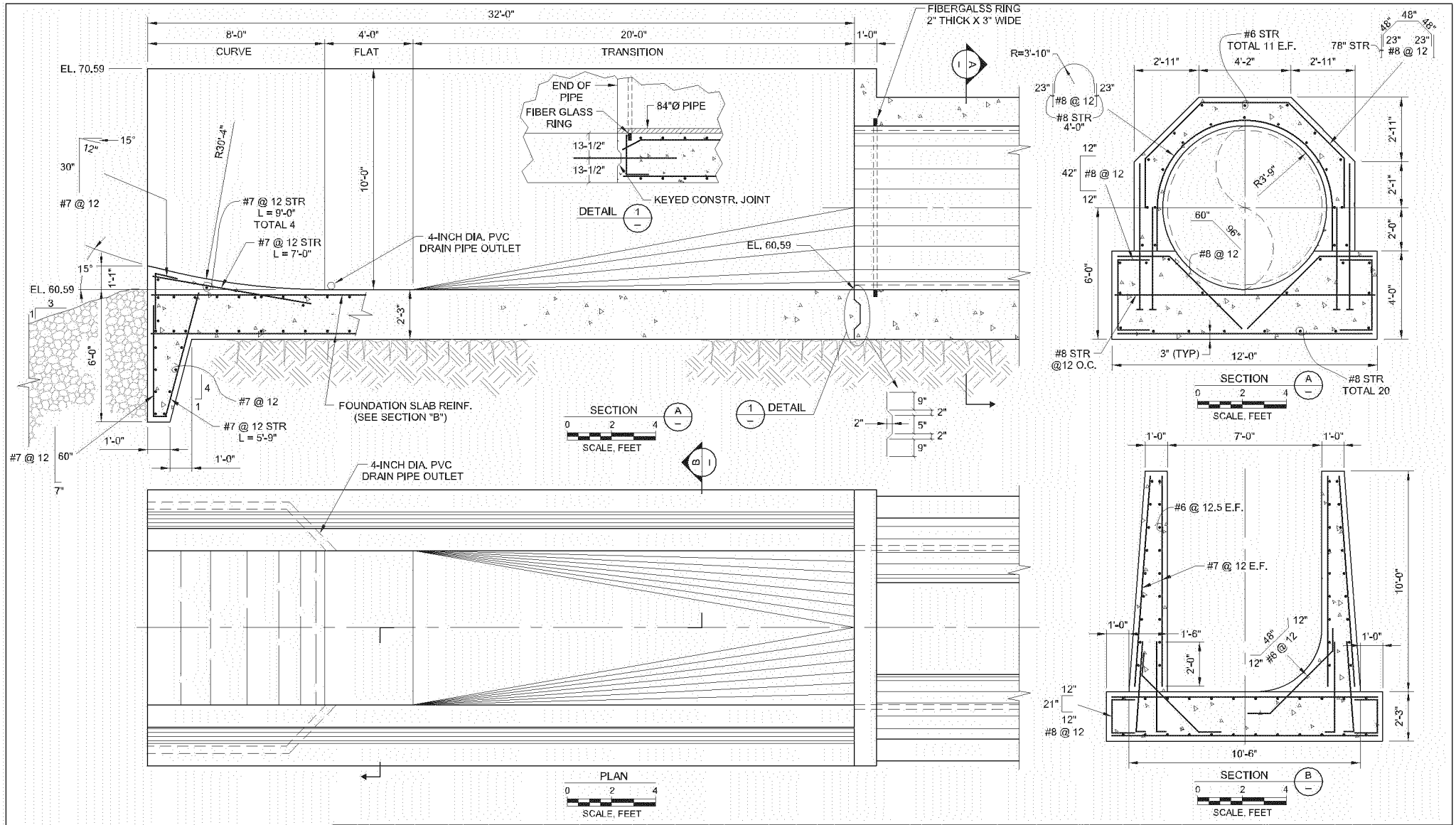

WASTE MANAGEMENT

Oakland California GEI Consultants

WILLIAM J. TETREAULT LICENSED PROFESSIONAL ENGINEER No. 12473-C HAWAII, U.S.A.

DATE: 01-13-10

REV.	DESCRIPTION	BY	APP.	DATE
0	ISSUED FOR CONSTRUCTION			01-13-10

DESIGNED BY:	A. TLABAR
CHECKED BY:	C. ANDERSON
DRAWN BY:	P. MORRISON
CAD FILE NAME:	C-22.dwg
PROJECT NO. 07018-1	SCALE: AS SHOWN

WAIMANALO GULCH LANDFILL
WESTERN SURFACE WATER DRAINAGE PROJECT
EWA BEACH, OAHU, HAWAII

FLIP BUCKET STRUCTURE
PLAN AND SECTIONS

DATE: 01/13/10

DRAWING NO. C-22

C-22 01/13/10 PFM

WMH003835

WMH003836

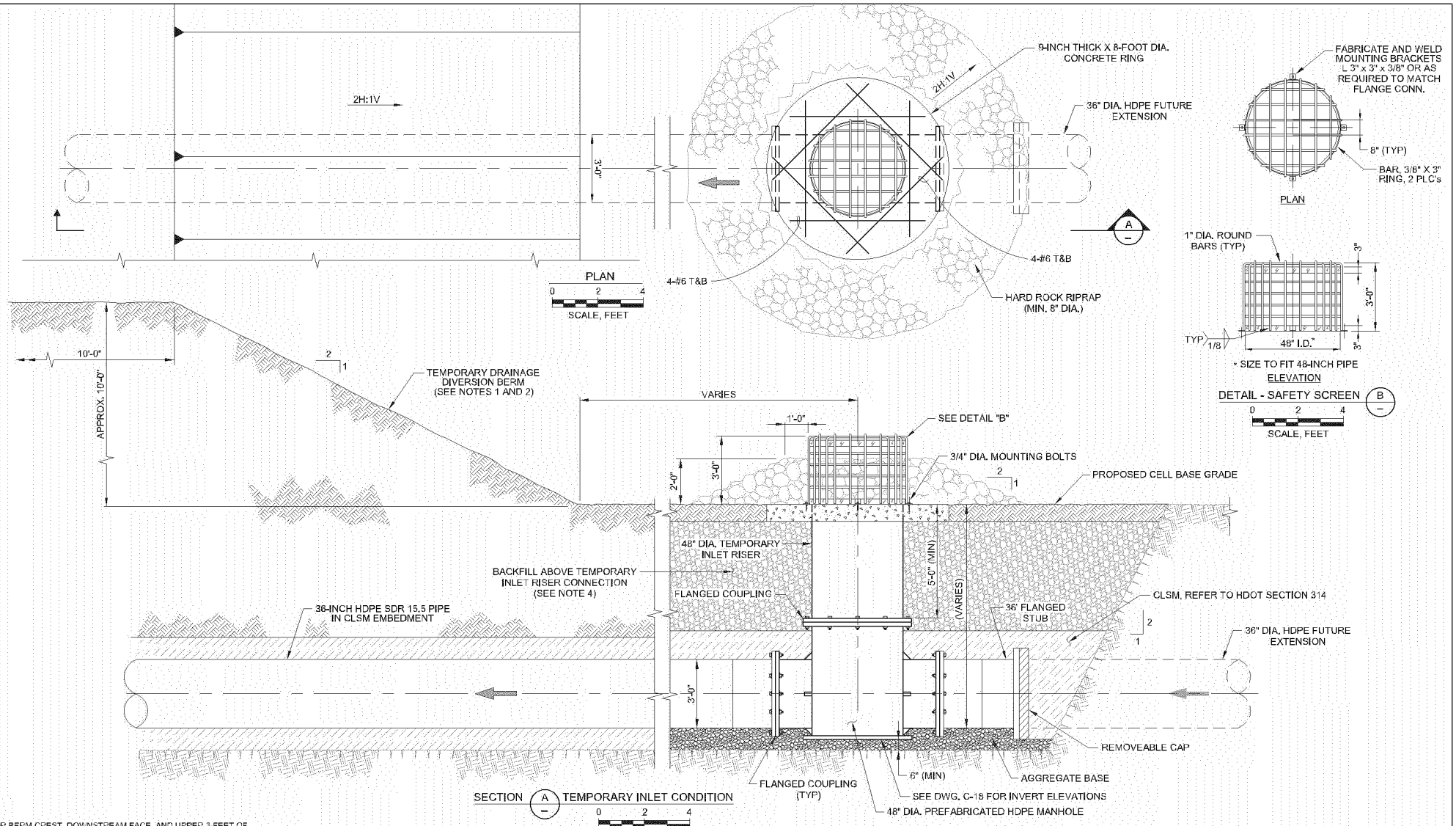

NOTES

1. ARMOR BERM CREST, DOWNSTREAM FACE, AND UPPER 3-FEET OF UPSTREAM FACE WITH ROCK OVER A SACRIFICAL GEOTEXTILE.
2. USE COMPACTED SOIL MATERIAL AS PER SPECIFICATION SECTION 02249.
3. ALL METAL SHALL BE PAINTED WITH TWO COATS OF "AMERLOCK 400" AFTER FABRICATION.
4. PIPE BEDDING SHALL MEET THE REQUIREMENTS OF SPECIFICATION SECTION 02318.
5. SEE DRAWING C-24 FOR INLET ABANDONMENT.

WASTE MANAGEMENT

Oakland California GEI Consultants

WILLIAM A. GETTEL LICENSED PROFESSIONAL ENGINEER No. 12473-C HAWAII, U.S.A.

DATE: 04/12/10

REV.	DESCRIPTION	BY	APP.	DATE
1	ISSUED FOR CONSTRUCTION			04-12-10
0	ISSUED FOR CONSTRUCTION			01-13-10

DESIGNED BY:	A. TLABAR
CHECKED BY:	C. ANDERSON
DRAWN BY:	P. MORRISON
CAD FILE NAME:	C-23
PROJECT NO. 07018-1	SCALE: AS SHOWN

WAIMANALO GULCH LANDFILL
WESTERN SURFACE WATER DRAINAGE PROJECT
EWA BEACH, OAHU, HAWAII

TEMPORARY DRAINAGE DIVERSION BERM AND INLET INSTALLATION

DATE: 04/12/10

DRAWING NO. C-23

C-23 (REV 1) 04-12-10 PYM

WMH003837

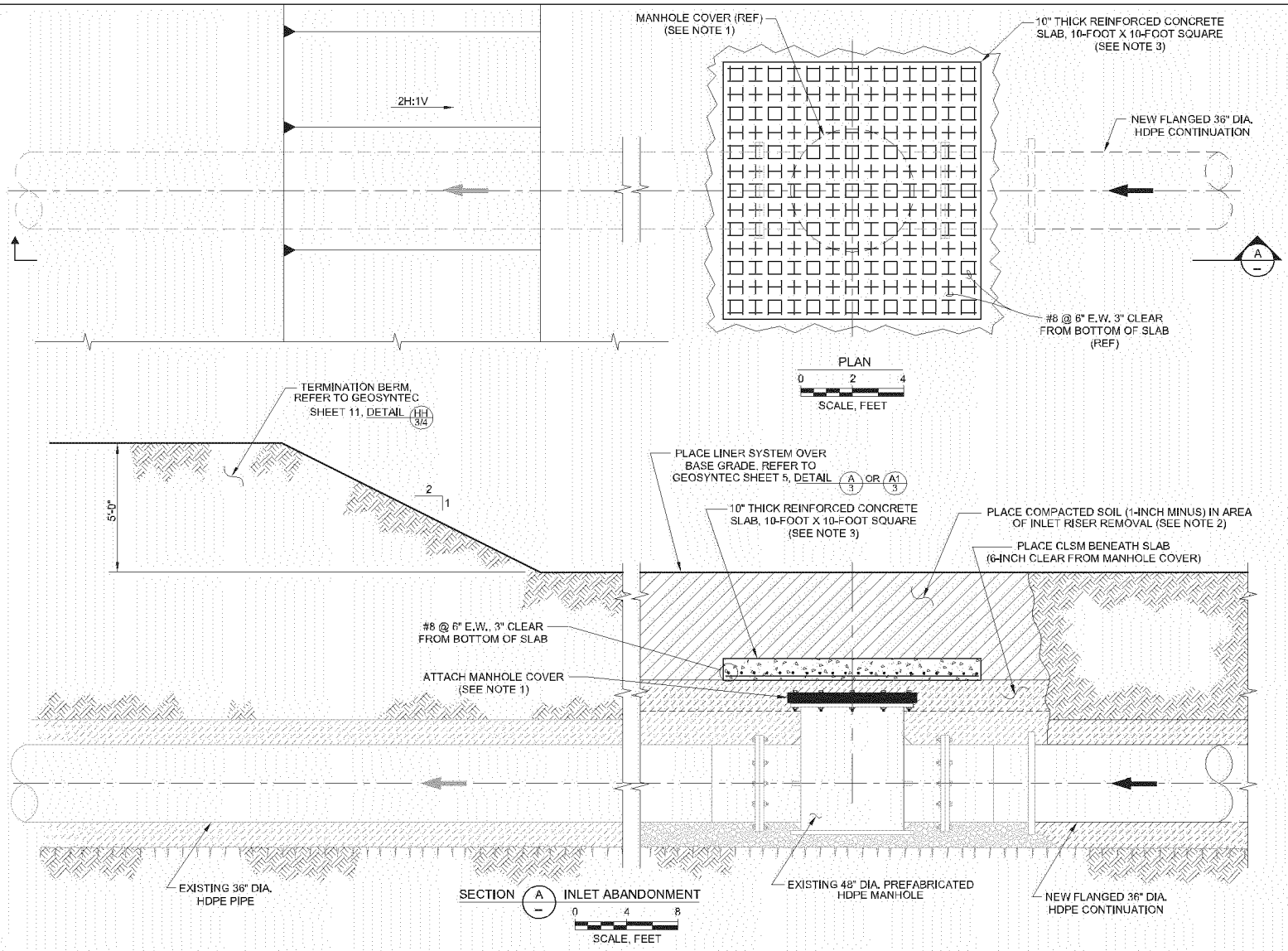

NOTES

1. REMOVE TEMPORARY INLET RISER AND REPLACE WITH HDPE MANHOLE COVER BOLTED TO THE FLANGE. THE HDPE MANHOLE COVER SHALL BE RATED FOR A MINIMUM OPERATING PRESSURE OF 10 PSI.
2. REMOVE PIPE BEDDING MATERIAL AND REPLACE WITH COMPACTED SOIL MATERIAL (1-INCH MINUS) MEETING SPECIFICATION REQUIREMENTS OF OF SECTION 02249.
3. SLAB SHALL CONSIST OF STRUCTURAL CONCRETE AND STEEL REINFORCEMENT MEETING SPECIFICATION REQUIREMENTS OF SECTION 03307.

WASTE MANAGEMENT

Oakland • California GEI Consultants

DATE: 04/12/10

REV.	DESCRIPTION	BY	APP.	DATE
0	ISSUED FOR CONSTRUCTION			04-12-10

DESIGNED BY: A. TLABAR
CHECKED BY: C. ANDERSON
DRAWN BY: P. MORRISON
CAD FILE NAME: C-24
PROJECT NO. 07015-1
SCALE: AS SHOWN

WAIMANALO GULCH LANDFILL
WESTERN SURFACE WATER DRAINAGE PROJECT
EWA BEACH, OAHU, HAWAII

INLET ABANDONMENT

DATE: 04/12/10
DRAWING NO. C-24

C-24 (REV 1) 04-12-10 P/M

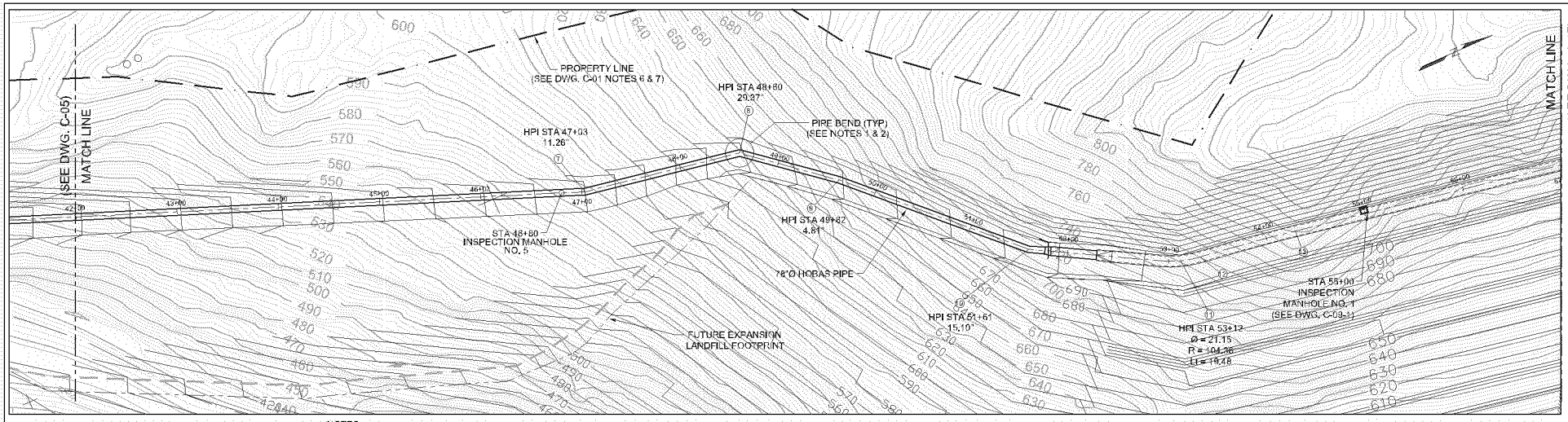

NOTES

1. PIPE DEFLECTION ANGLES OF INDIVIDUAL PIPE SEGMENTS IN ALIGNMENT BENT AREAS SHOULD NOT EXCEED 5 DEGREES, EXCEPT WHERE NOTED ON DRAWINGS. INDIVIDUAL PIPE SEGMENTS SHOULD NOT BE SHORTER THAN 5-FEET.
2. THE CONTRACTOR WILL NEED TO PROVIDE ADEQUATE SPACE IN THE TRENCH FOR LAYING OUT HOBAS PIPE SEGMENTS IN ALIGNMENT BENT AREAS.

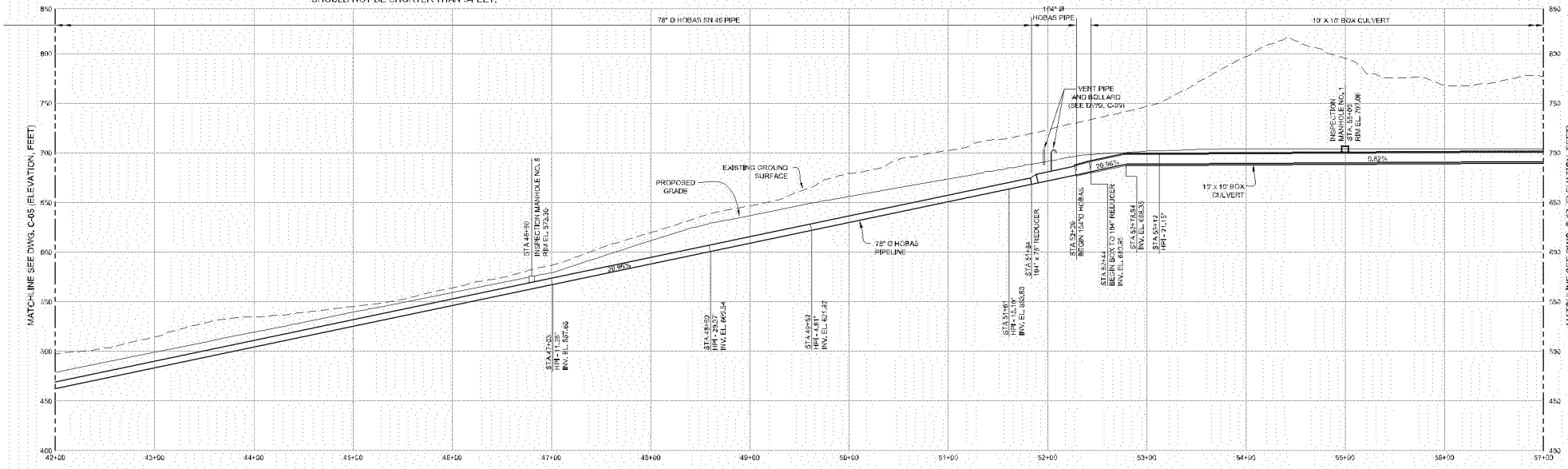

SCALE: FEET

WASTE MANAGEMENT

Oakland • California
GEI Consultants

REV.	DESCRIPTION	BY	APP.	DATE
0	ADDENDA DRAWINGS			00-03-10

DATE: 00-03-10

DESIGNED BY:	A. TLABAR
CHECKED BY:	C. ANDERSON
DRAWN BY:	P. EGGERS
CAD FILE NAME:	C-06-1.dwg
PROJECT NO. 07018-1	SCALE: AS SHOWN

WAIMANALO GULCH LANDFILL
WESTERN SURFACE WATER DRAINAGE PROJECT
EWA BEACH, OAHU, HAWAII

PLAN AND PROFILE
PERMANENT DRAINAGE
STA. 42+00 TO STA. 57+00

DATE: 00/03/2010
DRAWING NO.
C-06-1

C-06-1 9:29:13 PME

WMH003838

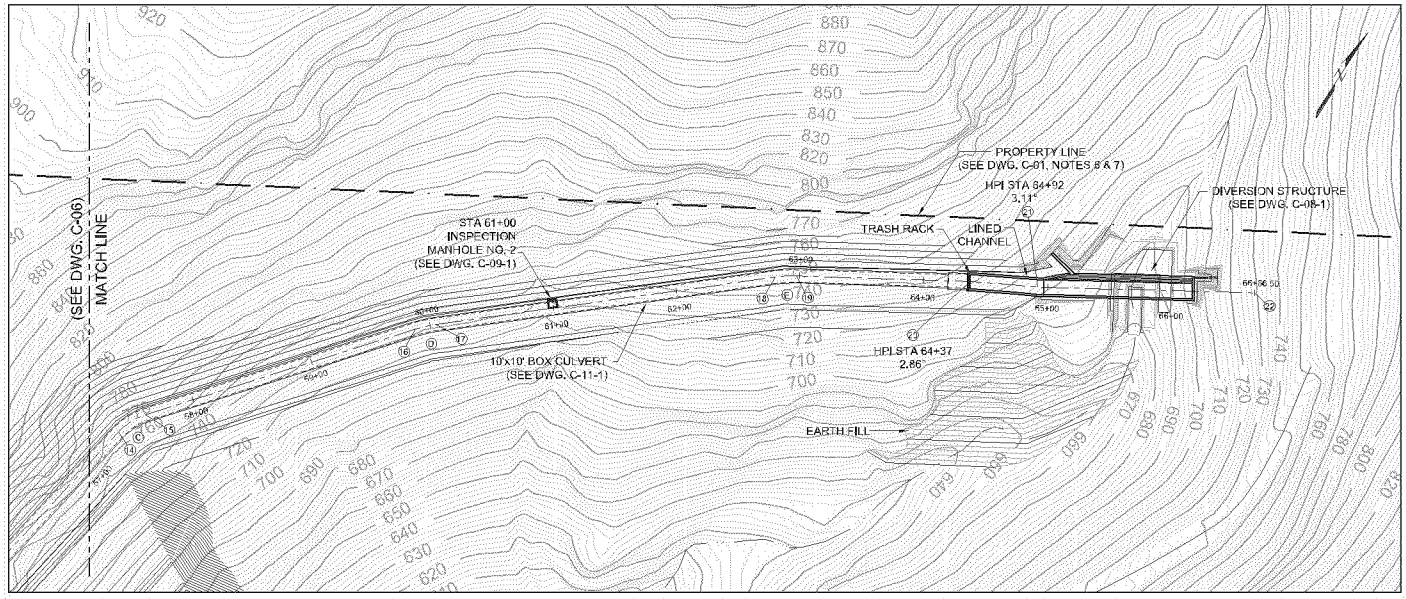

HORIZONTAL LAYOUT DATA

POINT NO.	STATION	NORTHING	EASTING
1	8+93.9	67897.27	456571.43
2	25+88.3	69249.64	457587.36
3	27+27.2	69385.98	457613.72
4	31+05.8	69741.90	457742.24
5	33+31.1	69934.84	457859.07
6	37+67.4	70211.44	458196.46
7	47+03.1	71085.56	458530.37
8	48+60.4	71240.61	458556.71
9	49+62.3	71319.78	458620.86
10	51+81.2	71463.29	458758.61
11	53+12.2	71595.68	458831.17
12	53+43.3	71626.55	458835.27
13	54+29.5	71711.70	458848.23
14	57+33.7	72011.59	458899.62
15	57+59.6	72034.89	458910.27
16	59+87.6	72211.04	459055.03
17	60+04.6	72223.16	459066.84
18	62+80.5	72403.74	459275.44
19	62+97.5	72413.73	459289.18
20	64+36.5	72485.63	459408.18
21	64+91.8	72511.80	459456.83
22	66+66.5	72602.80	459605.99

HORIZONTAL CURVE DATA

CURVE NO.	RADIUS	DELTA
A	57.33'	55°23'04"
B	2300.00'	02°08'45"
C	50.00'	29°49'35"
D	100.00'	09°42'16"
E	100.00'	08°19'40"

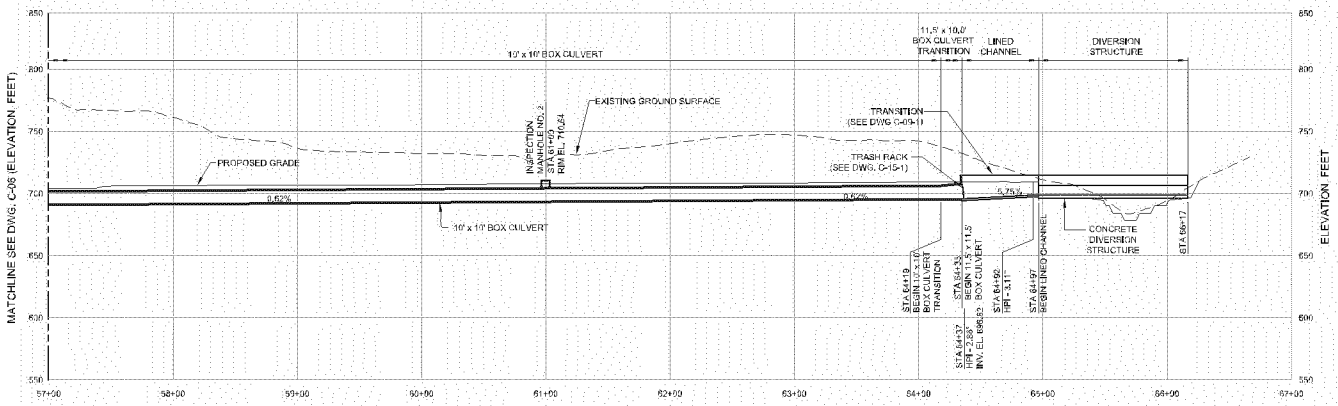

SCALE, FEET

WASTE MANAGEMENT

Oakland California GEI Consultants

REV.	DESCRIPTION	BY	APP.	DATE
0	ADDENDA DRAWINGS			00-03-10

DATE: 00-03-10

DESIGNED BY: A. TLABAR
CHECKED BY: C. ANDERSON
DRAWN BY: P. EGGERS
CAD FILE NAME: C-07-1.dwg
PROJECT NO. 07018-1
SCALE: AS SHOWN

WAIMANALO GULCH LANDFILL
WESTERN SURFACE WATER DRAINAGE PROJECT
EWA BEACH, OAHU, HAWAII

PLAN AND PROFILE
PERMANENT DRAINAGE
STA. 57+00 TO STA. 67+00

DATE: 00/03/2010
DRAWING NO.
C-07-1

C-07-1 09/23/10 PJE

WMH003839

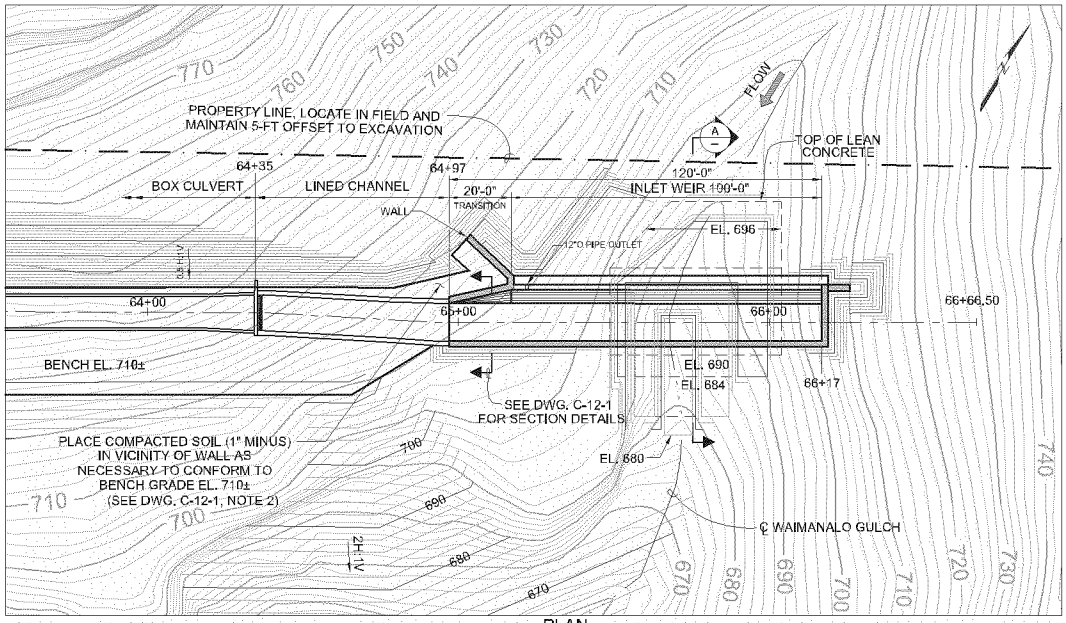

PLAN

SCALE: FEET

NOTES:

FOUNDATION PREPARATION

1. CONCRETE SHALL BE PLACED ON PREPARED EXCAVATION SURFACES.
2. SURFACES TO RECEIVE CONCRETE PLACEMENT SHALL BE PREPARED BY REMOVING ALL TOP SOIL AND WEATHERED ROCK.
3. WITHIN THE PREPARED FOUNDATION AREA ALL OPEN ROCK JOINTS SHALL BE TREATED BY FILLING WITH CONCRETE DOWN TO TWICE THE WIDTH OF THE OPENING.

CONCRETE WORKS

4. DIVERSION STRUCTURE SHALL BE FOUNDED ON PREPARED ROCK SURFACES OR ON LEAN CONCRETE PLACED TO FORM A LEVELED AND SOUND FOUNDATION.

GROUTING

5. HOLES SHALL BE GROUTED WITH A NON-SHRINK SECA GROUT 212 OR EQUIVALENT PRODUCT.

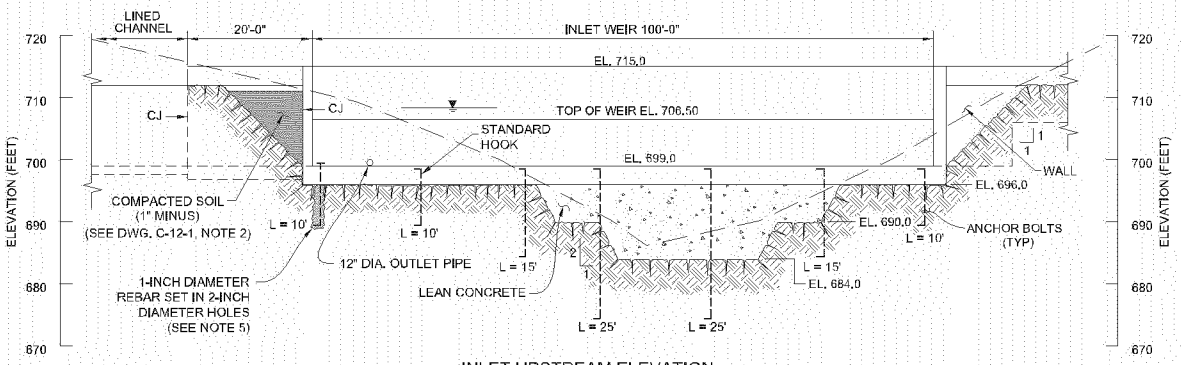

INLET UPSTREAM ELEVATION

SCALE: FEET

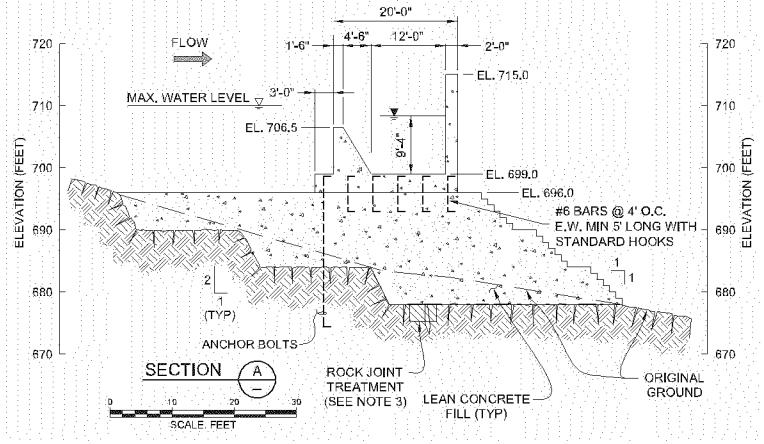

SECTION A

SCALE: FEET

WASTE MANAGEMENT

Oakland • California GEI Consultants

WILLIAM J. SETTERGREN LICENSED PROFESSIONAL ENGINEER No. 12473-C HAWAII, U.S.A.

DATE: 10-01-10

REV.	DESCRIPTION	BY	APP.	DATE
0	ADDENDA DRAWINGS			10-01-10

DESIGNED BY:	A. TLABAR
CHECKED BY:	C. ANDERSON
DRAWN BY:	P. EGGERS
CAD FILE NAME:	C-08.dwg
PROJECT NO. 07018-1	SCALE: AS SHOWN

WAIMANALO GULCH LANDFILL
WESTERN SURFACE WATER DRAINAGE PROJECT
EWA BEACH, OAHU, HAWAII

DIVERSION STRUCTURE PLAN AND SECTIONS

DATE: 10/01/2010

DRAWING NO. C-08-1

C-08-1 09/23/10 SJM

WMH003840

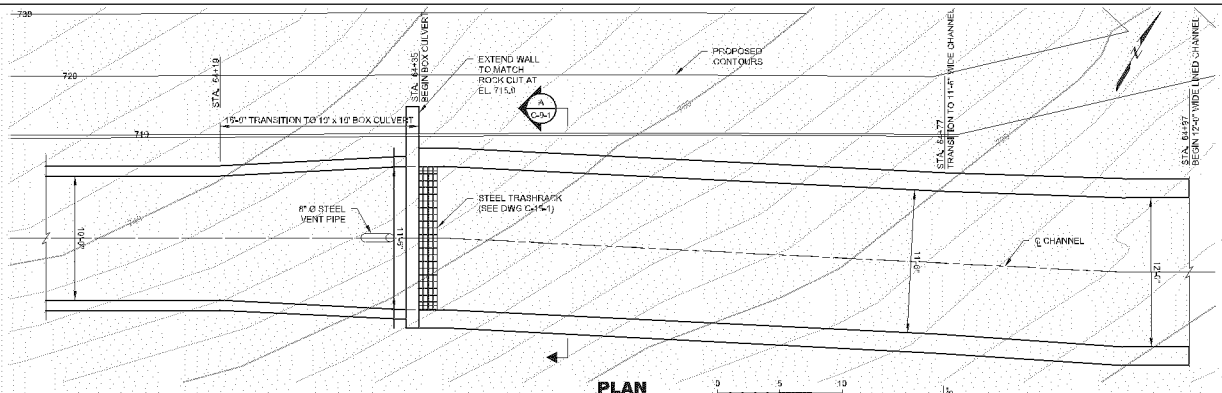

PLAN
BOX CULVERT TRANSITION

0 5 10
SCALE, FEET

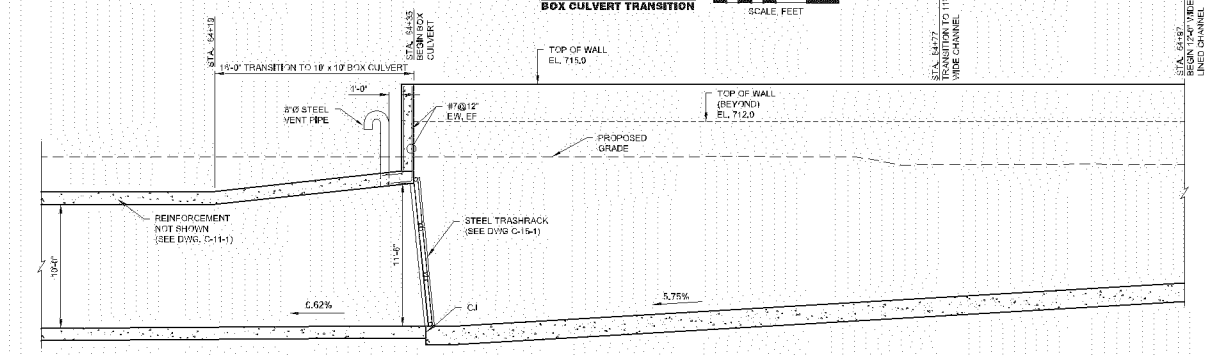

PROFILE

0 5 10
SCALE, FEET

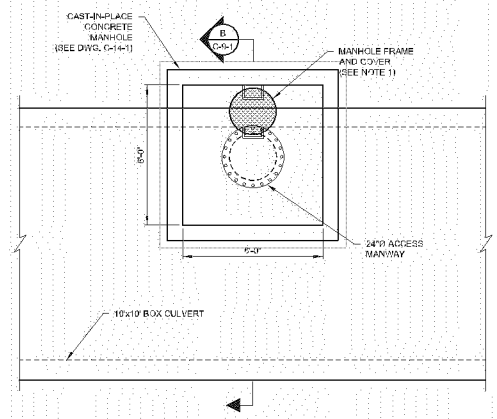

PLAN
INSPECTION MANHOLE

0 1 2 4 6 8
3/8"=1'-0"

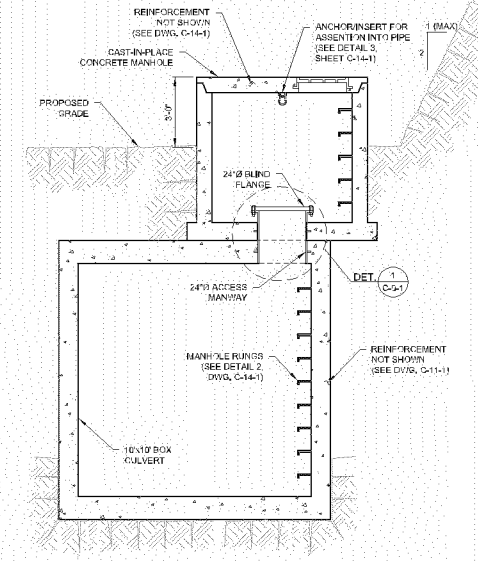

SECTION B C-9-1

0 1 2 4 6 8
3/8"=1'-0"

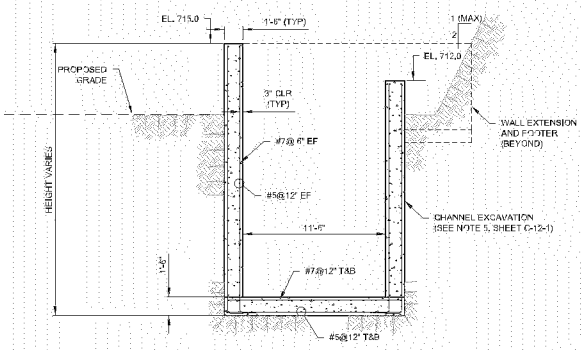

SECTION A C-9-1

0 5 10
SCALE, FEET

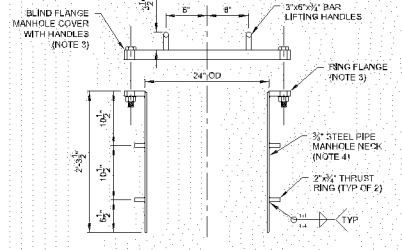

DETAIL 1 C-9-1

0 1 2
1" = 1'-0"

NOTES:

1. MANHOLE FRAME AND LID SHALL BE A NEENAH FOUNDRY R-5900G SERIES PRODUCT OR EQUIVALENT.
2. INSPECTION MANHOLES ALONG THE BOX CULVERT NOT RATED FOR TRAFFIC LOADING.
3. MANWAY COVER TO BE FABRICATED WITH STEEL FLANGES CONFORMING TO ANSI B16.5, CLASS 150.
4. MANHOLE NECK AND THRUST RINGS SHALL CONFORM TO ASTM A 139, GRADE C, D, OR E.
5. COAT AND LINE MANHOLE NECK WITH EPOXY CONFORMING TO AWWA C210 WITH MINIMUM DRY FILM THICKNESS OF 16 MILS.

WM WASTE MANAGEMENT

Oakland California GEI Consultants

REGISTERED PROFESSIONAL ENGINEER No. 12473-C HAWAII, U.S.A.

DATE: 10-01-10

REV.	DESCRIPTION	BY	APP.	DATE
0	ADDENDA DRAWINGS			10-01-10

DESIGNED BY:	P. EGGERS
CHECKED BY:	C. ANDERSON
DRAWN BY:	P. EGGERS
CAD FILE NAME:	C-09-1.dwg
PROJECT NO. 07015-1	SCALE: AS SHOWN

WAIMANALO GULCH LANDFILL
WESTERN SURFACE WATER DRAINAGE PROJECT
EWA BEACH, OAHU, HAWAII

TRANSITION AND INSPECTION MANHOLE PLAN AND SECTIONS

DATE: 10/01/2010
DRAWING NO.
C-09-1

C-09 12/24/09 PYM

WMH003841

WMH003842

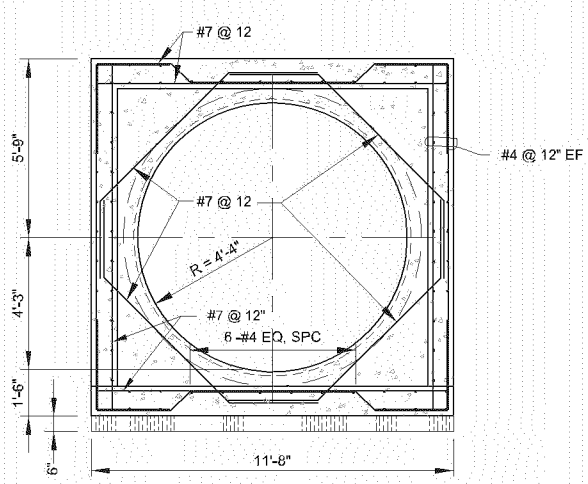

SECTION A

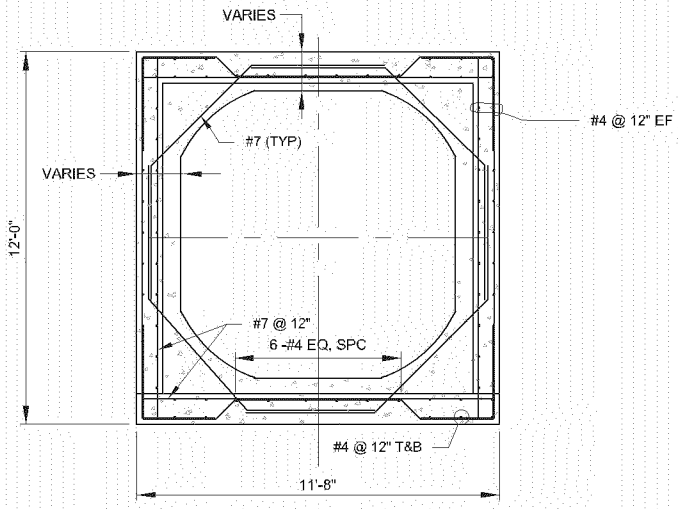

SECTION B

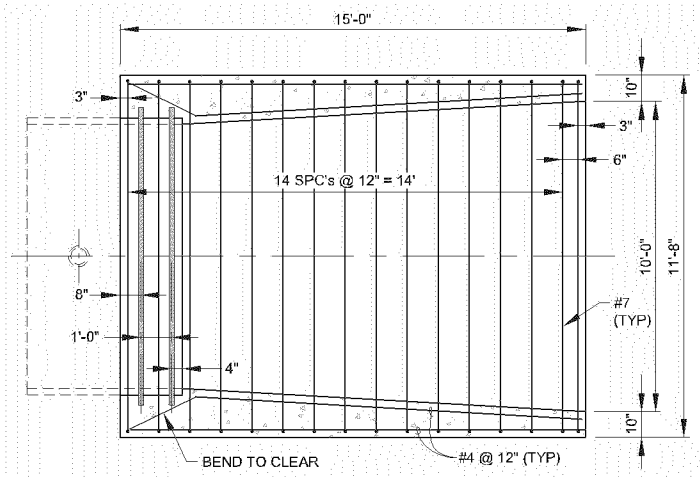

PLAN - TOP VIEW

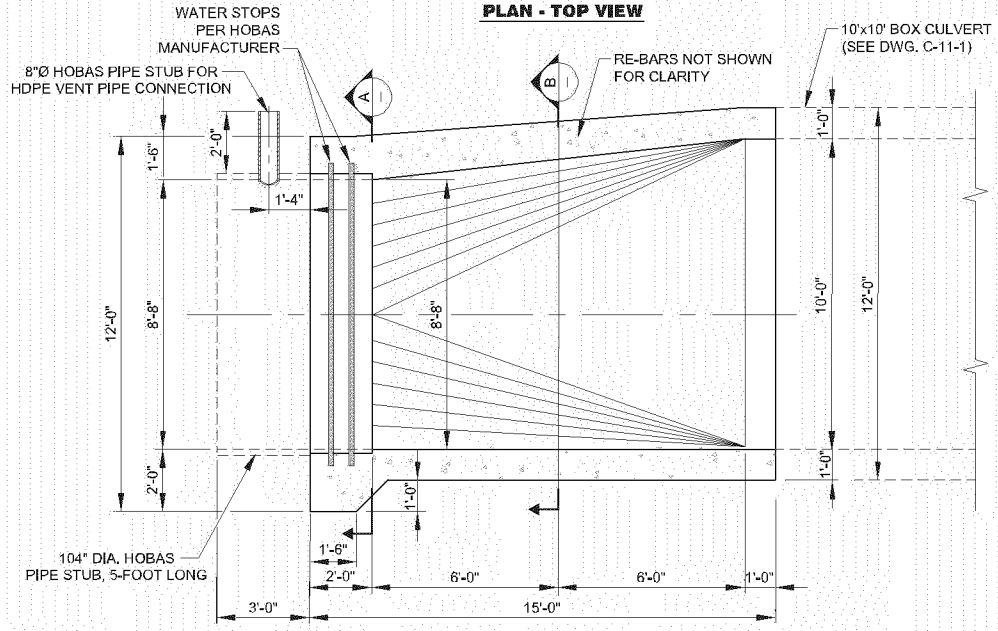

TRANSITION - LONGITUDINAL SECTION

0 1 2 4 8
SCALE IN FEET

NOTES:

1. FOR STRUCTURAL NOTES SEE C-14.
2. DESIGN STRENGTH OF CONCRETE IS 4000 PSI.
3. REINFORCEMENT STEEL SHALL COMPLY WITH THE REQUIREMENTS OF ASTM A615 GRADE 60 DEFORMED BARS.

WASTE MANAGEMENT

Oakland • California GEI Consultants

DATE: 10-01-10

REV.	DESCRIPTION	BY	APP.	DATE
0	ADDENDA DRAWINGS			10-01-10

DESIGNED BY:	P. EGGERS
CHECKED BY:	C. ANDERSON
DRAWN BY:	P. EGGERS
CAD FILE NAME:	C-10.dwg
PROJECT NO. 07019-1	SCALE: AS SHOWN

WAIMANALO GULCH LANDFILL
WESTERN SURFACE WATER DRAINAGE PROJECT
EWA BEACH, OAHU, HAWAII

TRANSITION STRUCTURE PLAN & SECTIONS
STA 52+44

DATE: 10/01/2010
DRAWING NO.
C-10-1

C-10-1: 09/23/10 SJM

WMH003843

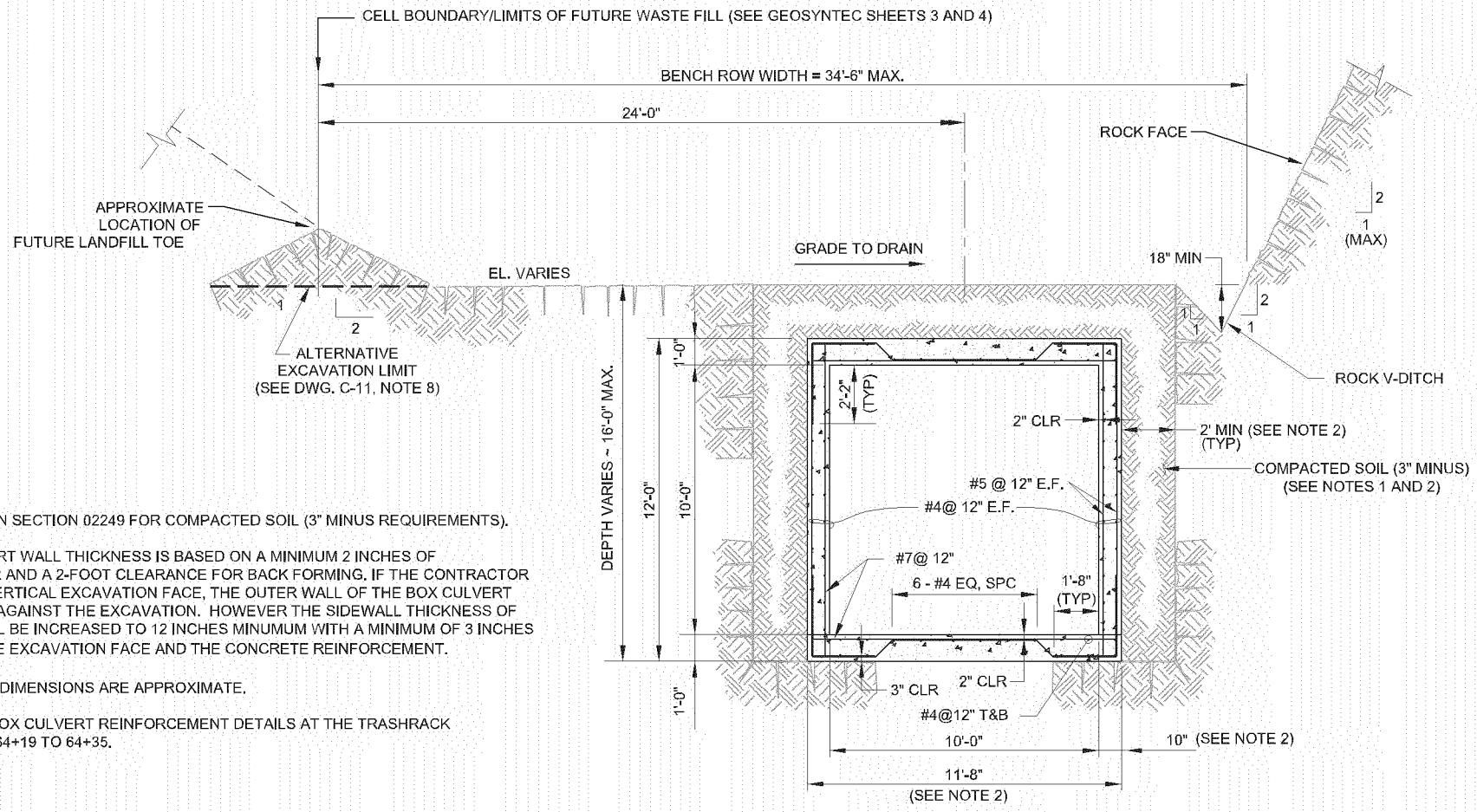

NOTES:

1. REFER TO SPECIFICATION SECTION 02249 FOR COMPACTED SOIL (3" MINUS REQUIREMENTS).
2. THE 10-INCH BOX CULVERT WALL THICKNESS IS BASED ON A MINIMUM 2 INCHES OF REINFORCEMENT COVER AND A 2-FOOT CLEARANCE FOR BACK FORMING. IF THE CONTRACTOR CAN PREPARE A NEAT VERTICAL EXCAVATION FACE, THE OUTER WALL OF THE BOX CULVERT CAN BE CAST DIRECTLY AGAINST THE EXCAVATION. HOWEVER THE SIDEWALL THICKNESS OF THE BOX CULVERT SHALL BE INCREASED TO 12 INCHES MINUMUM WITH A MINIMUM OF 3 INCHES OF COVER BETWEEN THE EXCAVATION FACE AND THE CONCRETE REINFORCEMENT.
3. ROW AND BENCH WIDTH DIMENSIONS ARE APPROXIMATE.
4. SEE SHEET C-09-1 FOR BOX CULVERT REINFORCEMENT DETAILS AT THE TRASHRACK TRANSITION FROM STA. 64+19 TO 64+35.

0 4 8
SCALE, FEET

WASTE MANAGEMENT

Oakland • California
GEI Consultants

DATE: 09-23-10

REV.	DESCRIPTION	BY	APP.	DATE
0	ADDENDA DRAWINGS			09-23-10

DESIGNED BY:	A. TLABAR
CHECKED BY:	C. ANDERSON
DRAWN BY:	P. EGGERS
CAD FILE NAME:	C-11-1
PROJECT NO. 07015-1	SCALE: AS SHOWN

WAIMANALO GULCH LANDFILL
WESTERN SURFACE WATER DRAINAGE PROJECT
EWA BEACH, OAHU, HAWAII

SECTION - BOX CULVERT
STA 52+17 TO STA 64+05

DATE: 09/23/2010
DRAWING NO.
C-11-1

C-11-1 09/23/10 SJM

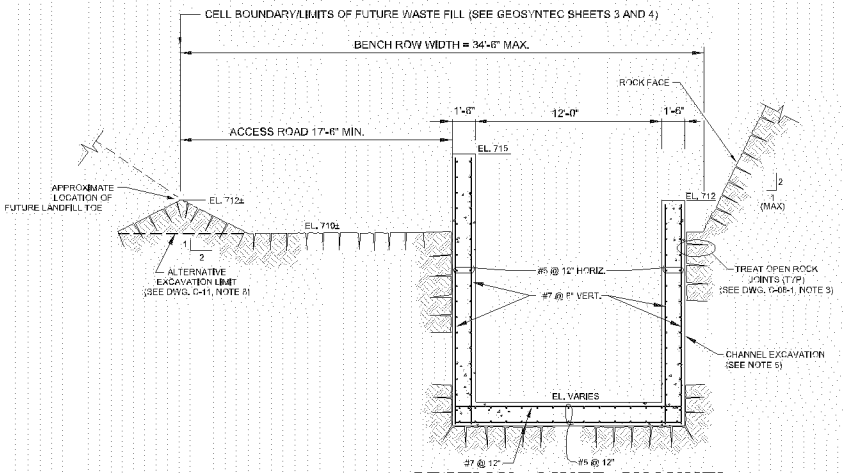

SECTION - LINED CHANNEL

STA 64+35 TO STA 64+97

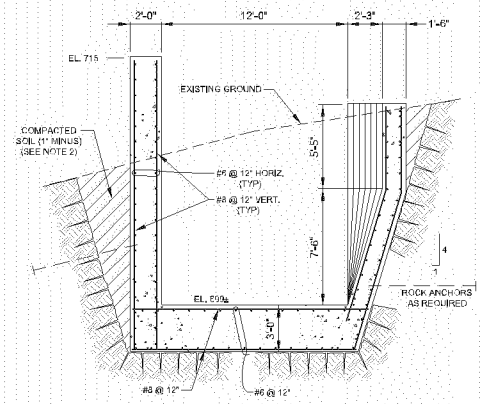

SECTION - DIVERSION STRUCTURE

MIDDLE OF TRANSITION

STA 65+07

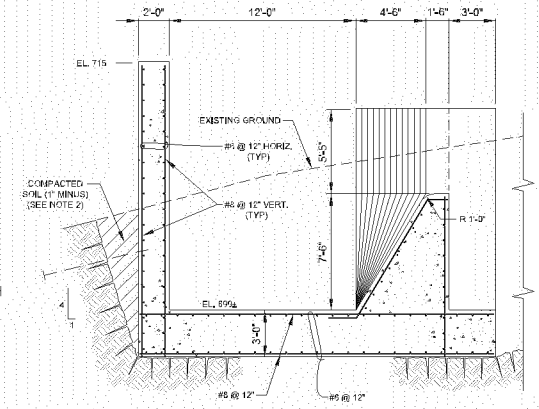

SECTION - DIVERSION STRUCTURE

AT INTAKE POINT

STA 66+17

NOTES:

1. INSTALL MINIMUM 24-INCH INCH DIAMETER DRILL HOLES FOR ROCK ANCHORS USING CEMENTITIOUS GROUT. PROVIDE STABLE DRILL HOLE AND FLUSH WITH WATER TO REMOVE LOOSE MATERIAL.
2. REFER TO SPECIFICATION SECTION 02240 FOR COMPACTED SOIL (1" MINUS) REQUIREMENTS.
3. LIMIT MAXIMUM LENGTH OF ANCHOR S/O THAT THE ANCHOR DOES NOT EXTEND BEYOND THE CELL BOUNDARY/LIMITS OF FUTURE WASTE FILL.
4. ROW AND BENCH WIDTH DIMENSIONS ARE APPROXIMATE.
5. IF CONTRACTOR CANNOT PREPARE A NEAT EXCAVATION FACE, AND BACKFORMING IS REQUIRED, A 2-FOOT MINIMUM CLEARANCE SHOULD BE PROVIDED, AND BACKFILLED WITH COMPACTED SOIL (3" MINUS) MATERIAL.

0 4 8
SCALE, FEET

WASTE MANAGEMENT

Oakland • California
GEI Consultants

WILLIAM A. RETTBERG
LICENSED PROFESSIONAL ENGINEER
No. 12473-C
HAWAII, U.S.A.
DATE: 10-01-10

REV.	DESCRIPTION	BY	APP.	DATE
0	ADDENDA DRAWINGS			10-01-10

DESIGNED BY:	
CHECKED BY:	C. ANDERSON
DRAWN BY:	P. EGGERS
CAD FILE NAME:	C-12-1.dwg
PROJECT NO. 07018-1	SCALE: AS SHOWN

WAIMANALO GULCH LANDFILL
WESTERN SURFACE WATER DRAINAGE PROJECT
EWA BEACH, OAHU, HAWAII

TYPICAL SECTIONS
DIVERSION STRUCTURE AND
LINED CHANNEL TRANSITION

DATE: 10/01/2010
DRAWING NO.
C-12-1

C-12-1 06/27/10 PJE

WMH003844

WMH003845

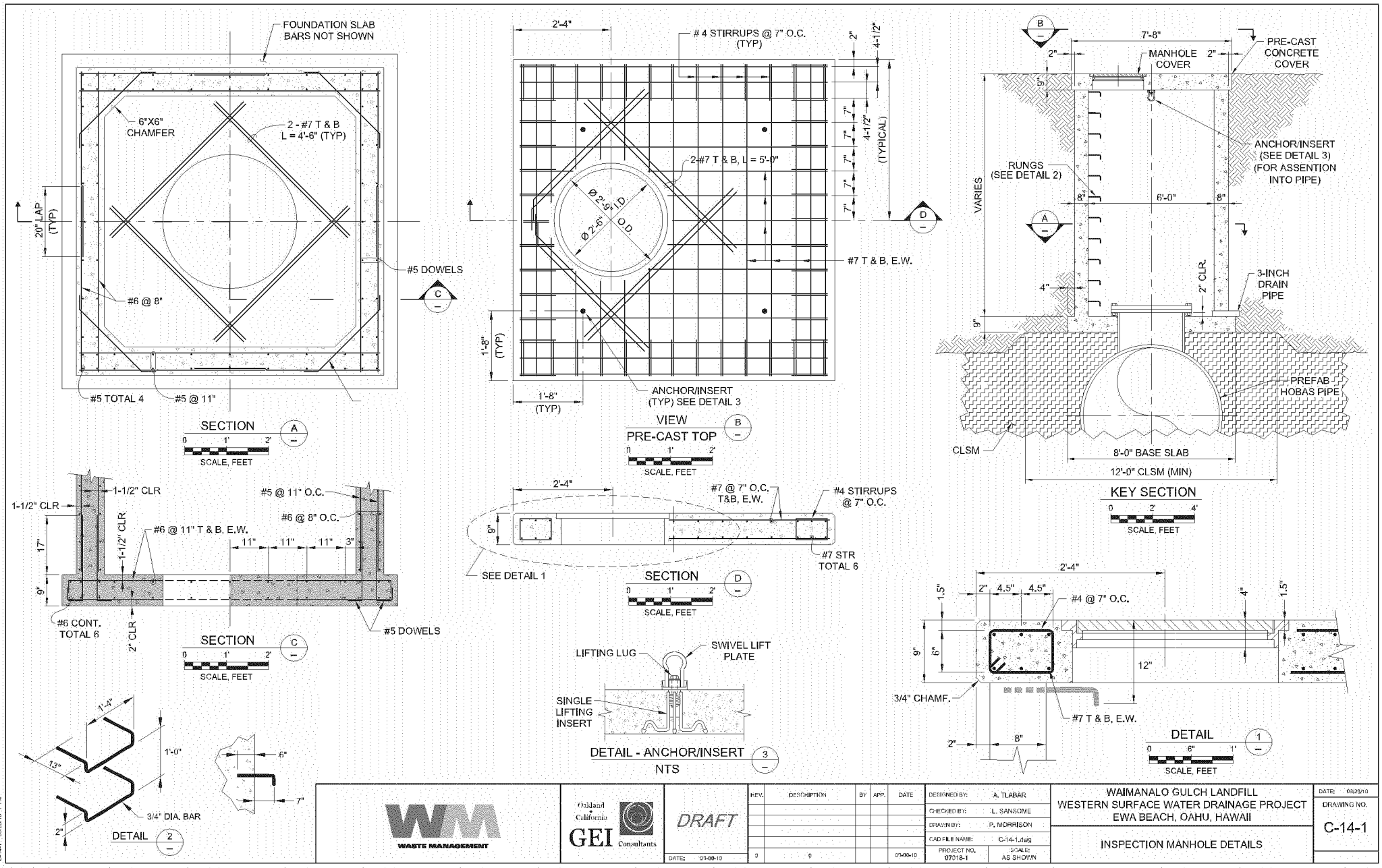

WASTE MANAGEMENT

Oakland California GEI Consultants

DRAFT

DATE: 09-00-10

REV.	DESCRIPTION	BY	APP.	DATE
0	0			09-00-10

DESIGNED BY:	A. TLABAR
CHECKED BY:	L. SANSOME
DRAWN BY:	P. MORRISON
CAD FILE NAME:	C-14-1.dwg
PROJECT NO. 07018-1	SCALE: AS SHOWN

WAIMANALO GULCH LANDFILL
WESTERN SURFACE WATER DRAINAGE PROJECT
EWA BEACH, OAHU, HAWAII

INSPECTION MANHOLE DETAILS

DATE: 09/23/10

DRAWING NO. C-14-1

C-14-1 09/23/10 P/N

WMH003846

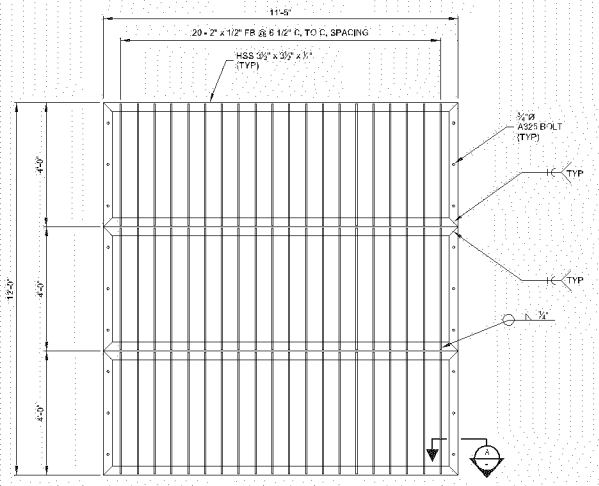

TRASH RACK PLAN

0 1 2 4
SCALE IN FEET

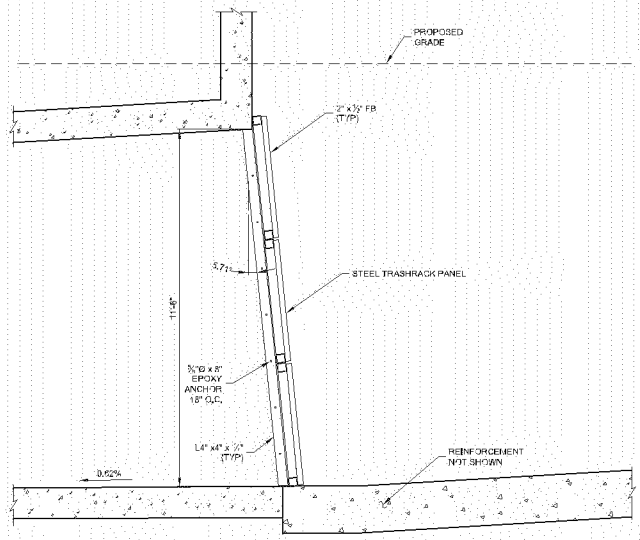

TRASH RACK SECTION

0 1 2 4
SCALE IN FEET

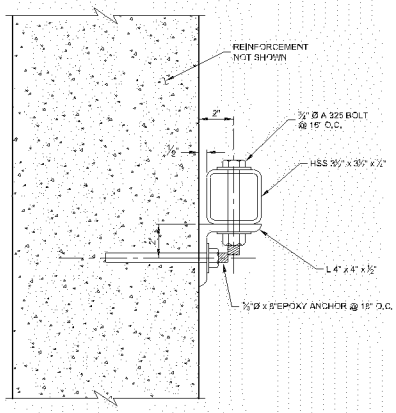

SECTION A
WALL ATTACHMENT

NOTES:

1. STANDARD ROLLED SECTIONS SHALL CONFORM TO ASTM A992. HOLLOW STRUCTURAL SECTIONS SHALL CONFORM TO ASTM A500, GRADE B. STEEL BARS SHALL CONFORM TO ASTM A36.
2. TRASHRACKS SHALL BE COATED AFTER FABRICATION WITH EPOXY CONFORMING TO AWWA C210 WITH MINIMUM THICKNESS OF 16 MILS.

WASTE MANAGEMENT

Oakland • California
GEI Consultants

WILLIAM A. ZETTERGREN
LICENSED PROFESSIONAL ENGINEER
No. 12473-C
HAWAII, U.S.A.
DATE: 10-01-10

REV.	DESCRIPTION	BY	APP.	DATE
0	ADDENDA DRAWINGS			10-01-10

DESIGNED BY:	P. EGGERS
CHECKED BY:	C. ANDERSON
DRAWN BY:	P. EGGERS
CAD FILE NAME:	C-15.dwg
PROJECT NO. 07018-1	SCALE: AS SHOWN

WAIMANALO GULCH LANDFILL
WESTERN SURFACE WATER DRAINAGE PROJECT
EWA BEACH, OAHU, HAWAII

TRASHRACK PLAN, SECTIONS, AND DETAILS

DATE: 10/01/2010
DRAWING NO.
C-15-1

C-15-1 10/01/10 PJE

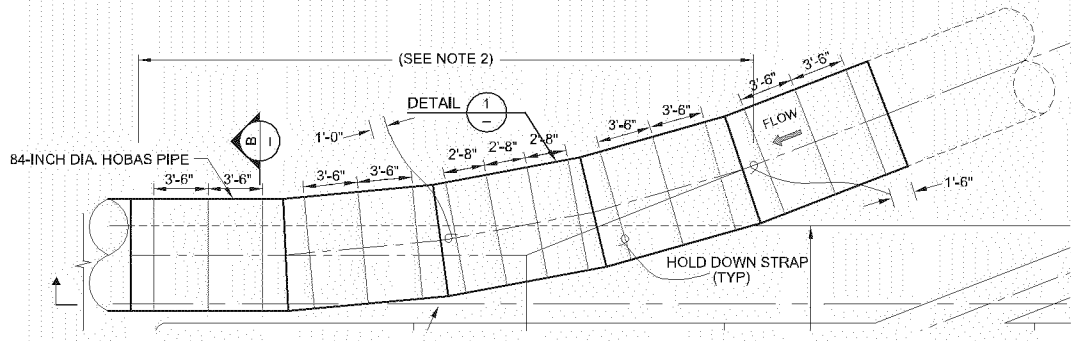

PLAN

NOTES:
SEE DWG C-20 FOR REFERENCED NOTES AND DETAILS

DATE: 06-11-10

0 4 8
SCALE, FEET

WASTE MANAGEMENT

Oakland California GEI Consultants

FOR REVIEW

REV.	DESCRIPTION	BY	APP.	DATE
0	ISSUED FOR REVIEW			

DESIGNED BY:	A. TLABAR
CHECKED BY:	C. ANDERSON
DRAWN BY:	P. MORRISON
CAD FILE NAME:	C-20-1.dwg
PROJECT NO. 07018-1	SCALE: AS SHOWN

WAIMANALO GULCH LANDFILL
WESTERN SURFACE WATER DRAINAGE PROJECT
EWA BEACH, OAHU, HAWAII

HOLD DOWN STRAP LAYOUT

DRAWING NO.
C-20-1

C-20-1 06/11/10 CA

WMH003847