Document No.c-5

Study Report

Shipboard test

of

ECOMARINE Ballast Water Treatment System

March, 2014

Marine Biological Research Institute of Japan

This report is a technical document that summarizes the shipboard test result of the full-scale ECOMARINE ballast water treatment system conducted by the Marine Biological Research Institute of Japan based on the standards for the type approval evaluation test of ballast water treatment systems (established by the Inspection and Measurement Division of the Maritime Bureau of the Ministry of Land, Infrastructure, Transport and Tourism, Japan) and the JIS Q 9001:2008 (appropriate to ISO 9001:2008).

Responsible personnel:

Project director and general manager	Shunji	Sukizaki
Product inspection director	Takaaki	Matsui
Project manager	Shinya	Suzuki
Project sub-manager	Keisuke	Unno
Project member	Marie	Kokai

Contents

I. Summary of test I-1
1. Vessel and test system I-1
1.1 Vessel I-1
1.2 Test system I-2
1.3 Sailing route I-3
1.4 Test period I-3
2. Test method I-4
2.1 System configuration I-4
2.2 Sampling method I-5
2.3 Analysis method I-7
2.4 Evaluation standards I-8

IV. Test result IV-1
1. Treatment performance test with S and L size groups IV-1
2. Treatment performance test with bacteria IV-3
Appendix data sheet of test result Ⅳ-4

I. Summary of test

The test was conducted in a total of 4 test cycles including 1 preliminary test cycle to check if the operation, the sampling method and the analysis method were appropriate at domestic ports in accordance with the G8 shipboard test requirement, only when it was found that the test requirement that the number of organisms in the untreated water and the control water during ballasting was more than 10 times the D-2 standard was met.

1. Vessel and test system

1.1 Vessel

- Name: ASUKA II
- Type: cruise ship
- Gross tonnage: 50,142 GT
- Owner: NYK CRUISES, CO., LTD.
- Flag of registry: Japan

Figure 1 ASUKA II

1.2 Test system

- Rated flow rate: 200 m^3/h

Figure 2 Filter unit

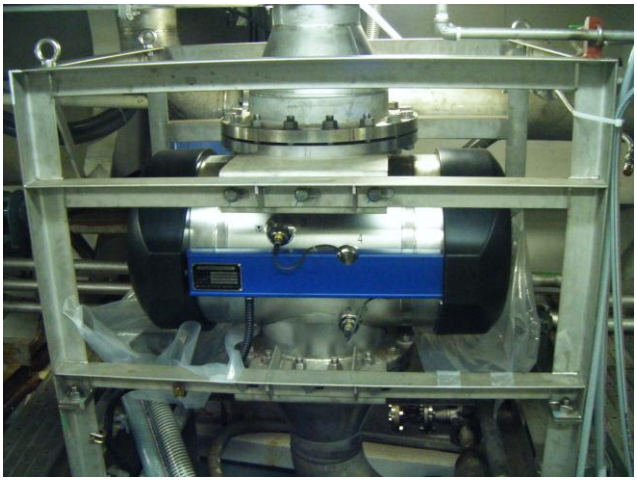

Figure 3 UV unit

Figure 4 Control unit

Figure 5 Organism concentration device

1.3 Sailing route

- Vessel's planned route (domestic and international ports based in Yokohama, Japan)

1.4 Test period

- From March, 2012 to January, 2014

Table 1 Date and location of test

Test cycle	Type of inspection	Ballasting		De-ballasting	
		Date	Location	Date	Location
Preliminary test cycle	Organisms in ballast tank (1)	July 23, 2013	Port of Yokohama Pier of Yokohama	July 25, 2013	Port of Hakodate
Test cycle 1	Organisms in ballast tank (2)	Aug. 1, 2013	Port of Yokohama Pier of Yokohama	Aug. 1, 2013	Port of Yokohama Pier of Yokohama
Test cycle 2	Organisms in ballast tank (3)	Sep. 23, 2013	Port of Yokohama Pier of Yokohama	Sep. 24, 2013	Port of Nagoya
Test cycle 3	Organisms in ballast tank (4)	Jan. 9, 2014	Port of Yokohama Pier of Yokohama	Jan. 11, 2014	Port of Yokohama Pier of Yokohama

2. Test method

2.1 System configuration

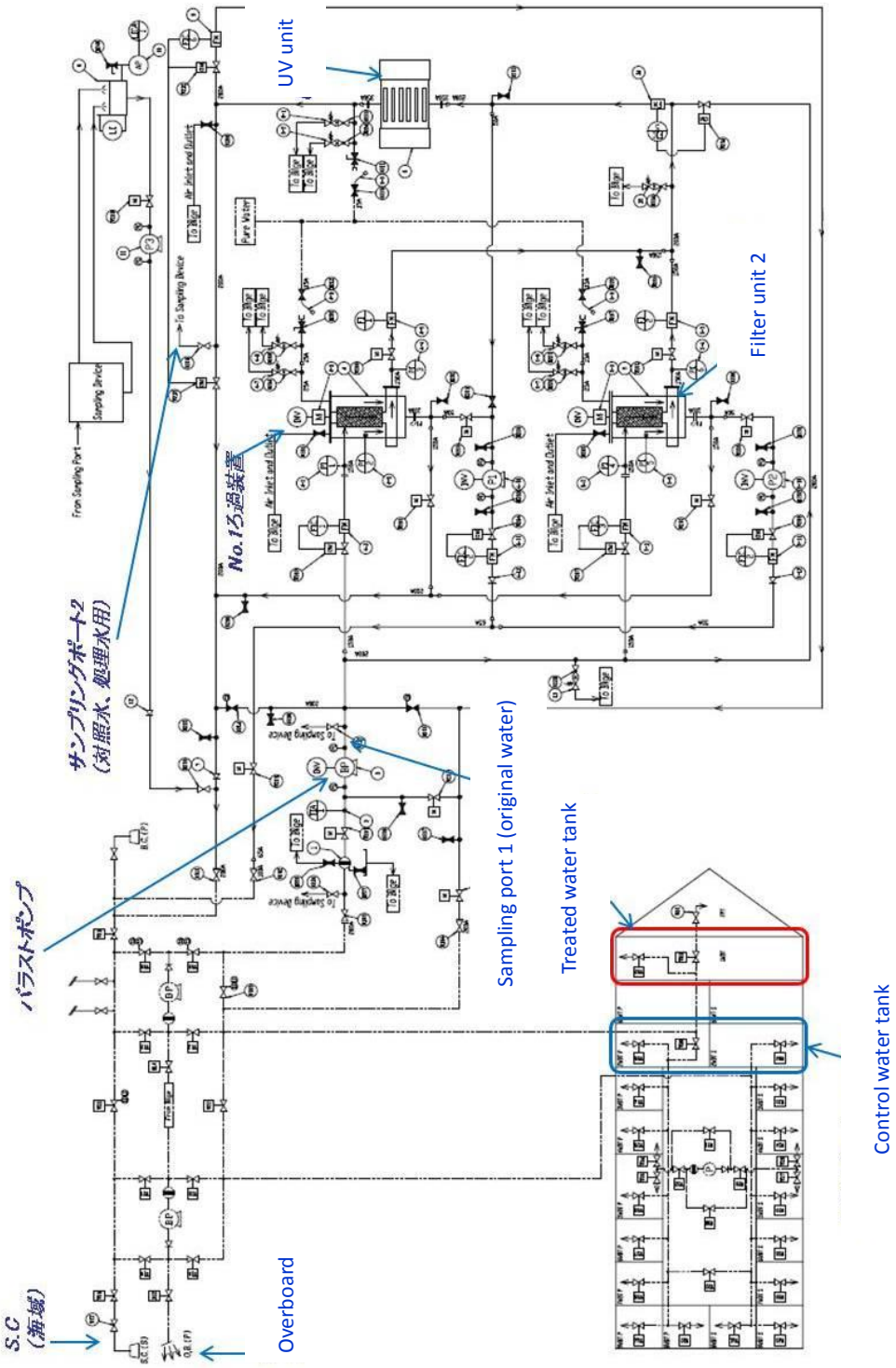

Figure 6 System configuration

2.2 Sampling method

The sampling was conducted using the sampling device in accordance with the Quality Assurance Project Plan (QAPP).

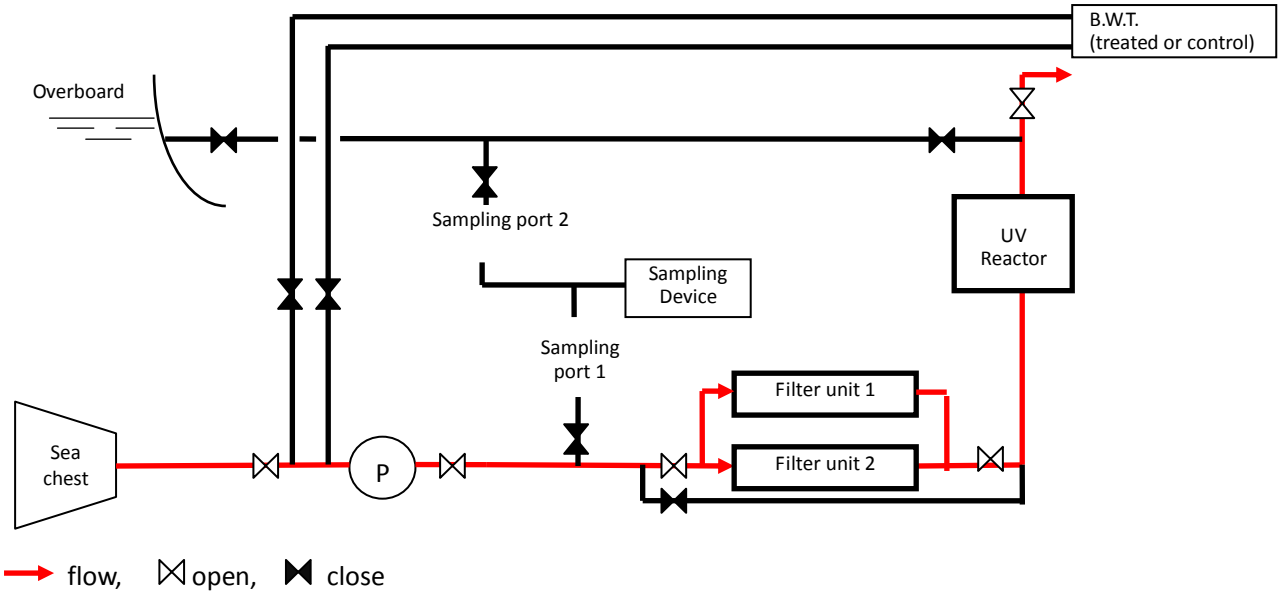

Figure 7 Ballast water flow during ballasting (treated water)

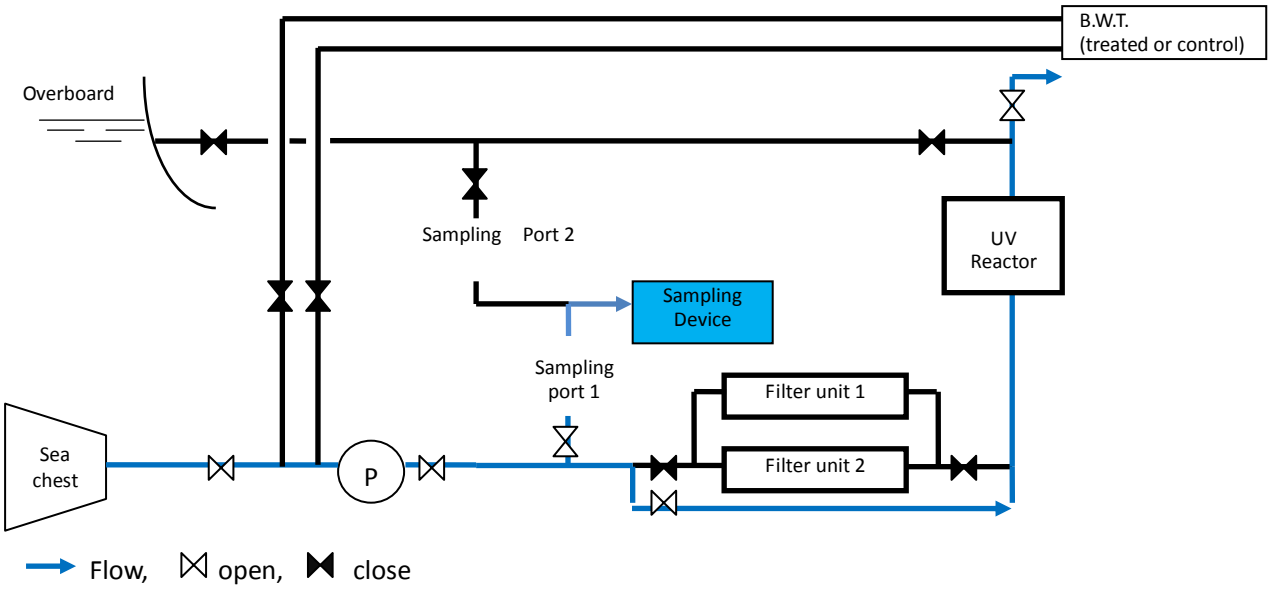

Figure 8 Ballast water flow during ballasting (untreated and control water)

During de-ballasting, the treated water by the UV reactor, and the untreated water and the control water passed through the UV reactor without irradiating UV lights were sampled.

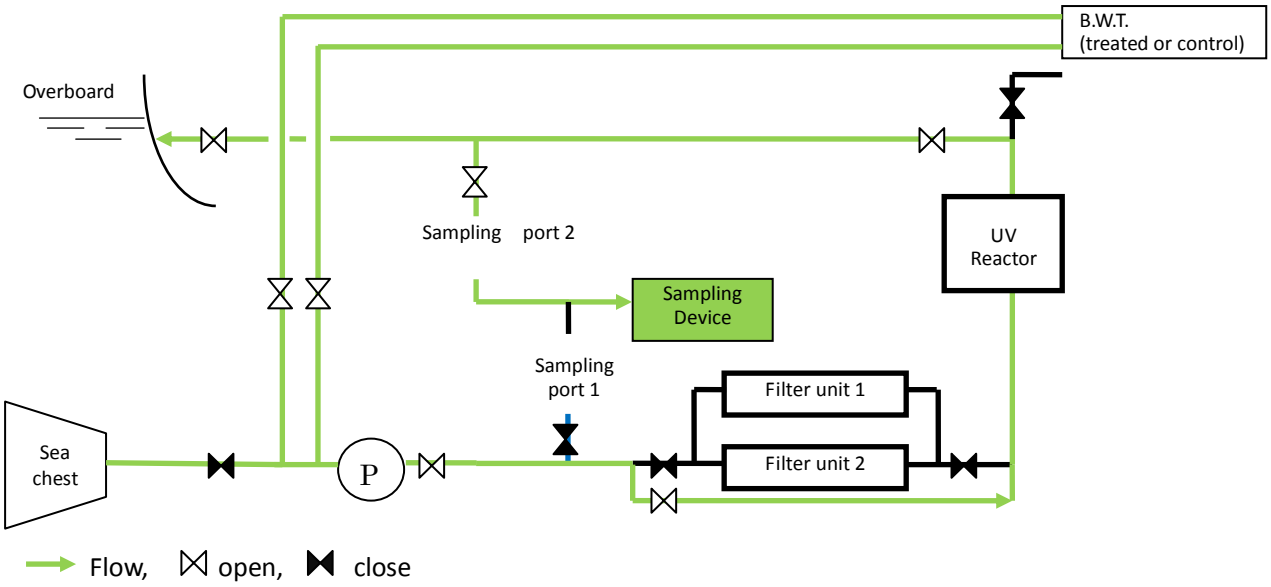

Figure 9 Ballast water flow during de-ballasting (treated water)

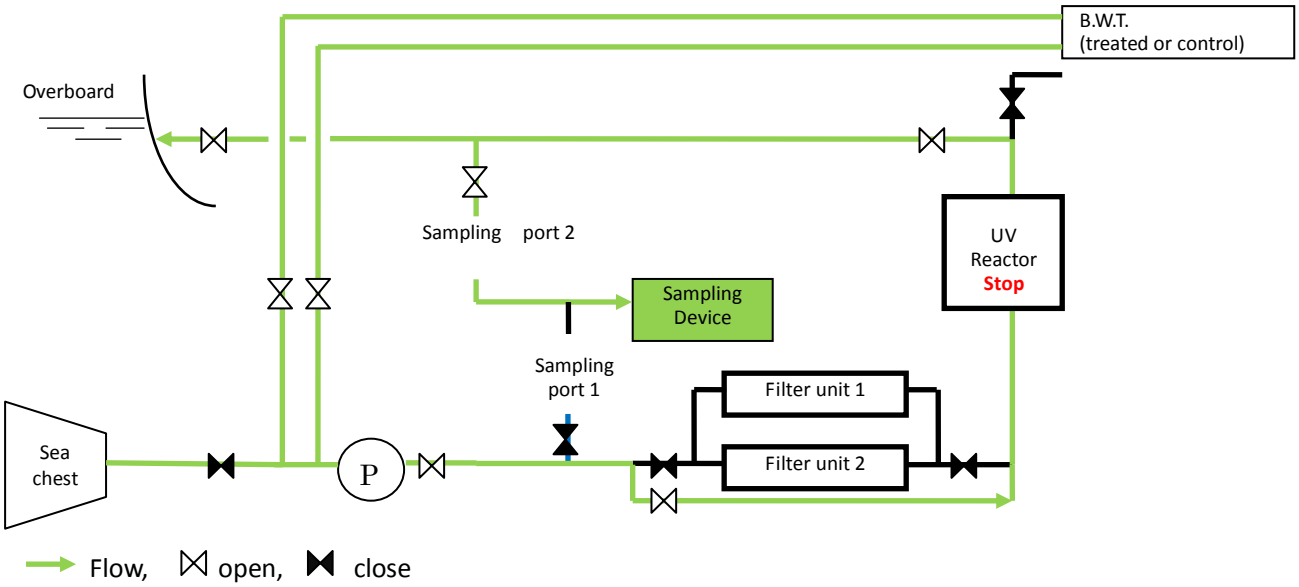

Figure 10 Ballast water flow during de-ballasting (untreated and control water)

Regarding the sampling period, frequency, item and volume, the below procedures were followed:

- Sampling period and frequency
  - Ballast water in the control water tank
    During ballasting, 3 times including the beginning, the mid and the end
    During de-ballasting, 3 times including the beginning, the mid and the end
  - Treated water
    During de-ballasting, 3 times including the beginning, the mid and the end

- Sampling item and volume
  - Viable organisms greater than or equal to 50 µm in minimum dimension (L size group)
    1 m^3 and over after concentrated by the sampling device
  - Viable organisms less than 50 µm and greater than or equal to 10 µm in minimum dimension (S size group)
  - Bacteria
    500 ml and over
  - POC, TSS
    POC: 250 ml and over, TSS: 1 L and over

2.3 Analysis method

The analysis methods of any items are indicated in the Quality Assurance Project Plan (QAPP).
Any samples were conveyed to the Marine Biological Research Institute of Japan immediately after the sampling to analyze them under the appropriate conditions because the analytical facility could not be prepared on the ship.

2.4 Evaluation standards

Each item was evaluated in accordance with the test requirement and the D-2 standard.

Table 2 Test requirement and D-2 standard

Item	Test requirement		D-2 standard
	Original water	**Control water**	**Treated water**
S size group	More than 10 times the D-2 standard (100 inds./ml)	Over the D-2 standard	Less than 10 inds./ml
L size group	More than 10 times the D-2 standard (100 inds./ml)	Over the D-2 standard	Less than 10 inds./ml
Escherichia coli	Over the D-2 standard	Over the D-2 standard	Less than 250 cfu/100 ml
Enterococci	Over the D-2 standard	Over the D-2 standard	Less than 100 cfu/100 ml
Vibrio cholera	Over the D-2 standard	Over the D-2 standard	Less than 1 cfu/100 ml

2.5 Other recorded items

- Any operating statuses of the system
- Flow rates at the time of treatment, when the ballast water was supplied to the control water tank, when the ballast water in the treated water tank was discharged and when the ballast water in the control water tank was discharged
- Ballast water volumes stored in the treated water tank, supplied into the control water tank and supplied into the sampling device
- Treated and control water tank capacities
- Ballasting and de-ballasting locations
- Pressures related to the filter unit
- Control conditions of UV dose, etc. at the time of treatment during ballasting and de-ballasting
- System trouble
- Other required items

IV. Test result

1. Treatment performance test with S and L size groups

In all the 3 test cycles, the original water and the control water met the G8 shipboard test requirements and the treated water met the D-2 standard.
This test is therefore evaluated as a validated test.

Table 1 Total of S and L size groups in the ballast tank

- **Test cycle 1**
  - **S size group**

Unit: inds./ml

Sample / Organism	August 1			August 1											
	Original water			Control water			Treated water								
	Beg	Mid	End	Beg	Mid	End	Beg	Mid	End	Beg	Mid	End	Beg	Mid	End
Phytoplankton	160	144	123	91	136	79	0	0	0	0	0	0	0	0	0
Zooplankton	0	0	0	1	1	1	0	0	0	0	0	0	0	0	0
Total of viable organisms	160	144	123	92	137	80	0	0	0	0	0	0	0	0	0

  - **L size group**

Unit: inds./m^3

Sample / Organism	August 1			August 1											
	Original water			Control water			Treated water								
	Beg	Mid	End	Beg	Mid	End	Beg	Mid	End	Beg	Mid	End	Beg	Mid	End
Phytoplankton	188,007	160,907	163,098	87,462	68,434	78,118	0	0	0	0	0	0	0	0	0
Zooplankton	126,875	98,525	142,600	38,200	77,650	72,200	0	0	0	0	0	1	1	0	0
Total of viable organisms	314,882	259,432	305,698	125,662	146,084	150,318	0	0	0	0	0	1	1	0	0

- **Test cycle 2**
  - **S size group**

Unit: inds./ml

Sample / Organism	September 23			September 24											
	Original water			Control water			Treated water								
	Beg	Mid	End	Beg	Mid	End	Beg	Mid	End	Beg	Mid	End	Beg	Mid	End
Phytoplankton	157	180	212	88	70	86	0	0	0	0	0	0	0	0	0
Zooplankton	67	103	143	19	11	11	0	0	0	0	0	0	0	0	0
Total of viable organisms	224	283	355	107	81	97	0	0	0	0	0	0	0	0	0

  - **L size group**

Unit: inds./m^3

Sample / Organism	September 23			September 24											
	Original water			Control water			Treated water								
	Beg	Mid	End	Beg	Mid	End	Beg	Mid	End	Beg	Mid	End	Beg	Mid	End
Phytoplankton	261,072	407,610	408,204	179,330	142,374	181,844	0	0	0	0	0	0	0	0	0
Zooplankton	186,000	216,000	203,000	29,060	18,809	16,920	0	1	1	0	0	0	0	0	0
Total of viable organisms	447,072	623,610	611,204	208,390	161,183	198,764	0	1	1	0	0	0	0	0	0

- **Test cycle 3**
  - **S size group**

Unit: inds./ml

Sample / Organism	January 9			January 11											
	Original water			Control water			Treated water								
	Beg	Mid	End	Beg	Mid	End	Beg	Mid	End	Beg	Mid	End	Beg	Mid	End
Phytoplankton	1,010	712	568	165	177	143	0	0	0	0	0	0	0	0	0
Zooplankton	0	0	0	0	0	0	0	0	0	0	0	0	0	0	0
Total of viable organisms	1,010	712	568	165	177	143	0	0	0	0	0	0	0	0	0

  - **L size group**

Unit: inds./m^3

Sample / Organism	January 9			January 11											
	Original water			Control water			Treated water								
	Beg	Mid	End	Beg	Mid	End	Beg	Mid	End	Beg	Mid	End	Beg	Mid	End
Phytoplankton	43,381	11,336	23,895	1,800	1,717	1,220	0	0	0	0	0	0	0	0	0
Zooplankton	7,176	8,496	6,826	918	990	1,100	0	0	0	0	0	0	0	0	0
Total of viable organisms	50,557	19,832	30,721	2,718	2,707	2,320	0	0	0	0	0	0	0	0	0

2. Treatment performance test with bacteria

In all the 3 test cycles, the original water and the control water met the G8 shipboard test requirements and the treated water met the D-2 standard.
This test is therefore evaluated as a validated test.

Table 2 Total of bacteria in the ballast tank

- **Test cycle 1**

Unit: cfu/100ml

Sample / Organism	August 1			August 1											
	Original water			Control water			Treated water								
	Beg	Mid	End	Beg	Mid	End	Beg	Mid	End	Beg	Mid	End	Beg	Mid	End
Vibrio cholera	0	0	0	0	0	0	0	0	0	0	0	0	0	0	0
Escherichia coli	2,100	2,100	5,100	2,800	24,000	2,000	55	38	4	72	64	20	19	17	5
Enterococci	390	56	0	510	1,100	1,300	2	0	0	2	0	1	2	19	0

- **Test cycle 2**

Unit: cfu/100ml

Sample / Organism	September 23			September 24											
	Original water			Control water			Treated water								
	Beg	Mid	End	Beg	Mid	End	Beg	Mid	End	Beg	Mid	End	Beg	Mid	End
Vibrio cholera	0	0	0	0	0	0	0	0	0	0	0	0	0	0	0
Escherichia coli	510	320	800	330	580	450	2	0	3	0	0	0	0	1	0
Enterococci	29	99	285	280	3,700	280	1	0	0	0	0	0	5	0	0

- **Test cycle 3**

Unit: cfu/100ml

Sample / Organism	January 9			January 9											
	Original water			Control water			Treated water								
	Beg	Mid	End	Beg	Mid	End	Beg	Mid	End	Beg	Mid	End	Beg	Mid	End
Vibrio cholera	0	0	0	0	0	0	0	0	0	0	0	0	0	0	0
Escherichia coli	410	270	60	1,900	1,900	1,200	0	0	0	0	0	0	0	0	0
Enterococci	130	160	53	220	315	330	0	0	0	0	0	0	0	0	0

Sample list (1)　Testcycle 1（Aug 1 ,2013）

L size plankton（500ml polypropylene container）

No	Size	Test water	Timing of sampling	The number of same sample	Sample container	The number of same sample
Testcycle 1	L	Original water	Beg		13- 2　LG1①	○
			Mid		13- 2　LG1②	○
			End		13- 2　LG1③	○
		Treated water	Beg	①	13- 2　LS1①	○
				②	13- 2　LS1②	○
				③	13- 2　LS1③	○
			Mid	①	13- 2　LS2①	○
				②	13- 2　LS2②	○
				③	13- 2　LS2③	○
			End	①	13- 2　LS3①	○
				②	13- 2　LS3②	○
				③	13- 2　LS3③	○
		Control water	Beg		13- 2　LT1	○
			Mid		13- 2　LT2	○
			End		13- 2　LT3	○

S size Plankton（1L polypropylene container）

No.	Size	Test water	Timing of sampling	The number of same sample	Sample container	The number of same sample
Testcycle 1	S	Original water	Beg	①	13- 2　SG1①	A specimen with most amount of plankton is adopted among 3 specimens
				②	13- 2　SG1②	
				③	13- 2　SG1③	
			Mid	①	13- 2　SG2①	A specimen with most amount of plankton is adopted among 3 specimens
				②	13- 2　SG2②	
				③	13- 2　SG2③	
			End	①	13- 2　SG3①	A specimen with most amount of plankton is adopted among 3 specimens
				②	13- 2　SG3②	
				③	13- 2　SG3③	
		Treated water	Beg	①	13- 2　SS1①	○
				②	13- 2　SS1②	○
				③	13- 2　SS1③	○
			Mid	①	13- 2　SS2①	○
				②	13- 2　SS2②	○
				③	13- 2　SS2③	○
			End	①	13- 2　SS3①	○
				②	13- 2　SS3②	○
				③	13- 2　SS3③	○
		Contol water	Beg	①	13- 2　ST1①	A specimen with most amount of plankton is adopted among 3 specimens
				②	13- 2　ST1②	
				③	13- 2　ST1③	
			Mid	①	13- 2　ST2①	A specimen with most amount of plankton is adopted among 3 specimens
				②	13- 2　ST2②	
				③	13- 2　ST2③	
			End	①	13- 2　ST3①	A specimen with most amount of plankton is adopted among 3 specimens
				②	13- 2　ST3②	
				③	13- 2　ST3③	

Sample list (2) Testcycle1 (Aug 1 ,2013)

Bacteria (500ml Corner polypropylene container)

No.	Size	Test water	Timing of sampling	The number of same sample	Sample container	The specimen which was adopted the lastdata
Testcycle 1	-	Original water	Beg		13- 2 G1	○
			Mid		13- 2 G2	○
			End		13- 2 G3	○
		Treated water	Beg	①	13- 2 S1①	○
				②	13- 2 S1②	○
				③	13- 2 S1③	○
			Mid	①	13- 2 S2①	○
				②	13- 2 S2②	○
				③	13- 2 S2③	○
			End	①	13- 2 S3①	○
				②	13- 2 S3②	○
				③	13- 2 S3③	○
		Control water	Beg		13- 2 T1	○
			Mid		13- 2 T2	○
			End		13- 2 T3	○

Water Quality(2 L Black polypropylene container)

No.	Size	Test water	Timing of sampling	The number of same sample	Sample container	The specimen which was adopted the lastdata
Testcycle 1	-	Original water	Mid		13- 2 G2	○
		Treated water	Mid		13- 2 S2	○

Table 1 .Test result with water quality

Date	Water	Timing of sample	Sample name	TSS mg/L	POC mg/L	Salinity	Temperature (℃)
2013/8/1	Original water	Mid	13-2-G2	7	0.58	31.56	24.2
	Control water	Mid	13-2-S2	3	0.52	31.44	25.2
	Treated water	Mid	13-2-T2	4	0.73	31.29	25.1

Table 2 . Test result with bacteria

Date	Test water	Timing of sampling	The number of same sample	Sample name	Vibrio cholera (cfu/100ml)	Escherichia coli (cfu/100ml)	Entero cocci (cfu/100ml)
2013/8/1	Original water	Beg		13-2 G1	0	2,100	390
		Mid		13-2 G2	0	2,100	56
		End		13-2 G3	0	5,100	0
	Treated water	Beg	①	13-2 S1①	0	55	2
			②	13-2 S1②	0	38	0
			③	13-2 S1③	0	4	0
		Mid	①	13-2 S2①	0	72	2
			②	13-2 S2②	0	64	0
			③	13-2 S2③	0	20	1
		End	①	13-2 S3①	0	19	2
			②	13-2 S3②	0	17	19
			③	13-2 S3③	0	5	0
	Control water	Beg		13-2 T1	0	2,800	510
		Mid		13-2 T2	0	24,000	1,100
		End		13-2 T3	0	2,000	1,300

Table3-1(2) S size group phytoplakton (viable organisms)

Unit :inds./L

No	門	綱	種 Species	2013/8/1			2013/8/1											
				Original water			Contorl water			Treated water								
				Beg	Mid	End	Beg	Mid	End	Beg			Mid			End		
				13-2 SG1②	13-2 SG2③	13-2 SG3②	13-2 ST1①	13-2 ST2②	13-2 ST3③	13-2 SS1①	13-2 SS1②	13-2 SS1③	13-2 SS2①	13-2 SS2②	13-2 SS2③	13-2 SS3①	13-2 SS3②	13-2 SS3③
1	渦鞭毛植物	渦鞭毛藻	Dinophysis caudata	224														
2	Dinophyta	Dinoflagellate	Oxyphysis oxytoxoides	224	184			823	590									
3			Gymnodiniales	31,797	43,697	26,208	17,193	13,164	13,579									
4			Ceratium furca	448	918	432	600	4,936	1,476									
5			Protoperidinium bipes	224	184	288		823										
6			Protoperidinium sp.						295							20		
7	不等毛植物	珪藻	Lauderia annulata		1,652	432		411	295									
8	Heterokontophyta	diatom	Skeletonema costatum	106,586	91,066	91,008	52,779	16,454	31,291									
9			Thalassiosira spp.	4,926	3,305	1,440	1,200	1,645	2,362						10			10
10			Leptocylindrus danicus		184													
11			Guinardia flaccida			288												
12			Rhizosolenia setigera	224														
13			Chaetoceros affine	9,405	734	1,728	17,193	87,208	22,435									
14			Chaetoceros decipiens	4,031	1,285	720	1,000	9,873	5,609									
15			Chaetoceros didymum	1,567			800											
16			Pleurosigma spp.	224	367	288	200	411	886									
			Total	159,880	143,576	122,832	90,965	135,748	78,818	0	0	0	0	0	10	20	0	10
			Amount of sample water(L)	1	1	1	1	1	1	1	1	1	1	1	1	1	1	1
			Amount of concentrated water(ml)	20	20	20	20	20	20	0.5	0.5	0.5	0.5	0.5	0.5	0.5	0.5	0.5
			Amount of concentrated test water(ml)	0.1	0.1	0.1	0.1	0.1	0.1	0.5	0.5	0.5	0.5	0.5	0.5	0.5	0.5	0.5
			Amount of sample test water (L)	0.005	0.005	0.005	0.005	0.005	0.005	1	1	1	1	1	1	1	1	1

Table4-1 Test result with S size group zooplakton (viable organisms)

Unit : inds./L

No	門	綱（亜綱）	測点 / 種 species	2013/8/1 Original water Beg 13-2 SG1②	Original water Mid 13-2 SG2③	Original water End 13-2 SG3②	2013/8/1 Control water Beg 13-2 ST1①	Control water Mid 13-2 ST2②	Control water End 13-2 ST3③	Treated water Beg 13-2 SS1①	Beg 13-2 SS1②	Beg 13-2 SS1③	Mid 13-2 SS2①	Mid 13-2 SS2②	Mid 13-2 SS2③	End 13-2 SS3①	End 13-2 SS3②	End 13-2 SS3③
1	鐵毛虫 Protozoa		Tintinnopsis beroidea	10				10	10									
2			Tintinnopsis corniger		10	20	10	20	30									
3			Tintinnopsis radix						20									
4			Stenosemella ventricosa		10	20	10	10	10									
5			Helicostomella longa		30	30	60	90	120									
6			Amphorellopsis acuta	30				60										
7			Eutintinnus sp.	30														
8		ー	Ciliophora	60	30	60			60									
9	Rotifera	Nematoda	Nematoda				90	60	60									
10	軟体動物 Mollusca	二枚貝Bivalvia	Bivalvia (D-shaped larva)	60	60			90	90									
11			Bivalvia (umbo larva)						10									
12	Arthropoda	Copepoda	Copepoda (nauplius)	10	40	10	360	1020	540									
			Total	200	180	140	530	1360	950	0	0	0	0	0	0	0	0	0

Amount of sample water(L)	1	1	1	1	1	1	1	1	1	1	1	1	1	1	1
Amount of concentrated water (ml)	1	1	1	1	1	1	0.5	0.5	0.5	0.5	0.5	0.5	0.5	0.5	0.5
Amount of concentrated test water (ml)	0.1	0.1	0.1	0.1	0.1	0.1	0.5	0.5	0.5	0.5	0.5	0.5	0.5	0.5	0.5
Amount of sample test water (L)	0.1	0.1	0.1	0.1	0.1	0.1	1	1	1	1	1	1	1	1	1

Table5-1(2) Test result with L size group phytoplankton (viable organisms)

No	門	綱	種 species	2013/8/1			2013/8/1										
				Original water			Control water			Treated water							
				Beg	Mid	End	Beg	Mid	End	Beg			Mid			End	
				13-2 LG1①	13-2 LG1②	13-2 LG1③	13-2 LT1	13-2 LT2	13-2 LT3	13-2 LS1①	13-2 LS1②	13-2 LS1③	13-2 LS2①	13-2 LS2②	13-2 LS2③	13-2 LS3①	13-2 LS3②
1	Dinophyta	Dinoflagellate	Protoperidinium spp.	79,258	64,970	43,493	20,386	16,786	18,077								
2	Heteroontophyta	Diatom	Coscinodiscus asteromphalus	1,843	1,214	1,919	658	1,291	1,937								
3			Coscinodiscus spp.	106,906	94,723	117,686	66,418	50,357	58,104								
			Total	188,007	160,907	163,098	87,462	68,434	78,118	0	0	0	0	0	0	0	0
			Amount of sample water (m^3)	1	1	1	1	1	1	1	1	1	1	1	1	1	1
			Amount of concentrated water (ml)	20	20	20	20	20	20	1	1	1	1	1	1	1	1
			Amount of concentrated test water (ml)	0.1	0.1	0.1	0.1	0.1	0.1	1	1	1	1	1	1	1	1
			Amount of sample test water (m^3)	0.005	0.005	0.005	0.005	0.005	0.005	1	1	1	1	1	1	1	1

Table6-1 Test result with L size group zooplankton (viable organisms)

Unit : inds. /m^3

No	門	綱 (亜綱)	種 species	2013/8/1			2013/8/1											
				Original water			Control water			Treated water								
				Beg	Mid	End	Beg	Mid	End	Beg			Mid			End		
				13-2 LG1①	13-2 LG1②	13-2 LG1③	13-2 LT1	13-2 LT2	13-2 LT3	13-2 LS1①	13-2 LS1②	13-2 LS1③	13-2 LS2①	13-2 LS2②	13-2 LS2③	13-2 LS3①	13-2 LS3②	13-2 LS3③
1	Sarcomastigophora	Polychaeta	Sticholonche zanclea	3,000	2,000	500												
2	Protoza	多膜	Tintinnopsis radix	1,000	225	500	200											
3	Platyhelminthes	Turbellaria	Turbellaria (larva)	1,000	200	300	150	100	200									
4	Rotifera	Rotifer	Synchaeta sp.	1,500	2,000	1,000			250									
5	Mollusca	Bivalia	Bivalvia (umbo larva)	1,275	500	45,000	250											
6	Annelida	Polychaeta	Polychaeta (larva)	4,000	11,500	12,000	750	1,500	1,750									
7	Arthropoda	Branchipoda	Penilia avirostris	100	100	200												
8		Copepoda	Acartia sp. (copepodite)	100	200		50											
9			Pseudodiaptomus marinus	2,000	3,000	3,000	1,500	3,250	3,000							1		
10			Pseudodiaptomus sp. (copepodite)	2,500	6,500	4,000	2,000	5,000	2,500									
11			Oithona davisae	58,000	38,000	42,500	20,500	37,250	37,500									
12			Oithona spp. (copepodite)	37,000	22,000	25,000	10,500	24,000	20,500									
13			Hemicyclops sp. (copepodite)	200		200		100	100						1			
14			Copepoda (nauplius)	13,000	10,000	7,000	2,250	5,750	5,250									
15		Crustacean	Balanomorpha (nauplius)	1,000	500	500			500									
16			Brachyura (zoea)		100													
17	Tentaculata	Phoronida	Phoronida (actinotrocha)	500	1,000	200												
18	Chaetognatha	Arrow warm	Sagitta crassa	600	600	700		700	650									
19			Sagitta spp. (juvenile)	100														
20	Echinodermata	Ophiuroidea	Ophiuroidea (ophiopluteus)		100		50											
			Total	126,875	98,525	142,600	38,200	77,650	72,200	0	0	0	0	0	1	1	0	0

Amount of sample water(m^3)	1	1	1	1	1	1	1	1	1	1	1	1	1	1	1
Amount of concentrated water (ml)	30	30	30	15	15	15	1	1	1	1	1	1	1	1	1
Amount of concentrated test water (ml)	0.3	0.3	0.3	0.3	0.3	0.3	1	1	1	1	1	1	1	1	1
Amount of sample test water (m^3)	0.01	0.01	0.01	0.02	0.02	0.02	1	1	1	1	1	1	1	1	1

Table7-1 S size group organisms

Unit : inds./m l

Organisms \ Sample	2013/8/1			2013/8/1											
	Original water			Control water			Treated water								
	Beg	Mid	End	Beg	Mid	End	Beg			Mid			End		
	13-2 SG1②	13-2 SG2③	13-2 SG3②	13-2 ST1①	13-2 ST2②	13-2 ST3③	13-2 SS1①	13-2 SS1②	13-2 SS1③	13-2 SS2①	13-2 SS2②	13-2 SS2③	13-2 SS3①	13-2 SS3②	13-2 SS3③
Phytoplankton	160	144	123	91	136	79	0	0	0	0	0	0	0	0	0
Zooplankton	0	0	0	1	1	1	0	0	0	0	0	0	0	0	0
Total of viable organisms	160	144	123	92	137	80	0	0	0	0	0	0	0	0	0

Table7-2 L size group organisms

Unit : inds./m^3

Organsims \ Sample	2013/8/1			2013/8/1											
	Original water			Control water			Treated water								
	Beg	Mid	End	Beg	Mid	End	Beg			Mid			End		
	13-2 LG1①	13-2 LG1②	13-2 LG1③	13-2 LT1	13-2 LT2	13-2 LT3	13-2 LS1①	13-2 LS1②	13-2 LS1③	13-2 LS2①	13-2 LS2②	13-2 LS2③	13-2 LS3①	13-2 LS3②	13-2 LS3③
Phytoplankton	188,007	160,907	163,098	87,462	68,434	78,118	0	0	0	0	0	0	0	0	0
Zooplankton	126,875	98,525	142,600	38,200	77,650	72,200	0	0	0	0	0	1	1	0	0
Total of viable organisms	314,882	259,432	305,698	125,662	146,084	150,318	0	0	0	0	0	1	1	0	0

Sample lost(1)　Testcycle 2 Sep 23～ Sep 24 2013

L size group plankton (500m Polypropylene container)

No	Size	test water	Timing of sampling	The number of same sample	Sample container	The number of same sample
Testcycle 2	L	Original water	Beg		13- 12 LG1①	○
			Mid		13- 12 LG1②	○
			End		13- 12 LG1③	○
		Treated water	Beg	①	13- 12 LS1①	○
				②	13- 12 LS1②	○
				③	13- 12 LS1③	○
			Mid	①	13- 12 LS2①	○
				②	13- 12 LS2②	○
				③	13- 12 LS2③	○
			End	①	13- 12 LS3①	○
				②	13- 12 LS3②	○
				③	13- 12 LS3③	○
		Control water	Beg		13- 12 LT1	○
			Mid		13- 12 LT2	○
			End		13- 12 LT3	○

S size Plankton (1L polypropylene container)

No.	Size	Test water	Timing of sampling	The number of same sample	Sample container	The number of same sample
Testcycle 2	S	Original water	Beg	①	13- 12 SG1①	A specimen with most amount of plankton is adopted among 3 specimens
				②	13- 12 SG1②	
				③	13- 12 SG1③	
			Mid	①	13- 12 SG2①	A specimen with most amount of plankton is adopted among 3 specimens
				②	13- 12 SG2②	
				③	13- 12 SG2③	
			End	①	13- 12 SG3①	A specimen with most amount of plankton is adopted among 3 specimens
				②	13- 12 SG3②	
				③	13- 12 SG3③	
		Treated water	Beg	①	13- 12 SS1①	○
				②	13- 12 SS1②	○
				③	13- 12 SS1③	○
			Mid	①	13- 12 SS2①	○
				②	13- 12 SS2②	○
				③	13- 12 SS2③	○
			End	①	13- 12 SS3①	○
				②	13- 12 SS3②	○
				③	13- 12 SS3③	○
		Contol water	Beg	①	13- 12 ST1①	A specimen with most amount of plankton is adopted among 3 specimens
				②	13- 12 ST1②	
				③	13- 12 ST1③	
			Mid	①	13- 12 ST2①	A specimen with most amount of plankton is adopted among 3 specimens
				②	13- 12 ST2②	
				③	13- 12 ST2③	
			End	①	13- 12 ST3①	A specimen with most amount of plankton is adopted among 3 specimens
				②	13- 12 ST3②	
				③	13- 12 ST3③	

Sample list (2) Testcycle2 (Sep 23 ,2013 ～ Sep 24 ,2013)

Bacteria (500ml Corner polypropylene container)

No.	Size	Test water	Timing of sampling	The number of same sample	Sample container	The specimen which was adopted the lastdata
Testcycle 2	–	Original water	Beg		13- 12 G1	○
			Mid		13- 12 G2	○
			End		13- 12 G3	○
		Treated water	Beg	①	13- 12 S1①	○
				②	13- 12 S1②	○
				③	13- 12 S1③	○
			Mid	①	13- 12 S2①	○
				②	13- 12 S2②	○
				③	13- 12 S2③	○
			End	①	13- 12 S3①	○
				②	13- 12 S3②	○
				③	13- 12 S3③	○
		Control water	Beg		13- 12 T1	○
			Mid		13- 12 T2	○
			End		13- 12 T3	○

Water Quality(2 L Black polypropylene container)

No.	Size	Test water	Timing of sampling	The number of same	Sample container	The specimen which was adopted the lastdata
Testcycle 2	–	Original water	Mid		13- 12 G2	○
		Treated water	Mid		13- 12 S2	○
		Control water	Mid		13- 12 T2	○

Table 1 .Test result with water quality

Date	Water	Timing of sample	Sample name	TSS mg/L	POC mg/L	Salinity	Temperature ℃
2013/9/23	Original water	Mid	13-12-G2	9	1.71	27.16	25.7
2013/9/24	Control water	Mid	13-12-S2	4	0.44	29.14	26.1
	Treated water	Mid	13-12-T2	8	1.50	27.22	25.8

Table 2 . Test result with bacteria

Date	水	Timing of sampling	The number of same sample	Sample name	Vibrio cholera (cfu/100ml)	scherichia col (cfu/100ml)	Entero cocci (cfu/100ml)
2013/9/23	Original water	Beg		13-12 G1	0	510	29
		Mid		13-12 G2	0	320	99
		End		13-12 G3	0	800	285
2013/9/24	Treated water	Beg	①	13-12 S1①	0	2	1
			②	13-12 S1②	0	0	0
			③	13-12 S1③	0	3	0
		Mid	①	13-12 S2①	0	0	0
			②	13-12 S2②	0	0	0
			③	13-12 S2③	0	0	0
		End	①	13-12 S3①	0	0	5
			②	13-12 S3②	0	1	0
			③	13-12 S3③	0	0	0
	Control water	Beg		13-12 T1	0	330	280
		Mid		13-12 T2	0	580	3,700
		End		13-12 T3	0	450	280

Table3-1(2)　S size group phytoplakton (viable organisms)

Unit :inds./L

No	門	綱	種 species	2013/9/23			2013/9/24											
				Original water			Contorl water			Treated water								
				Beg	Mid	End	Beg	Mid	End	Beg			Mid			End		
				13-12 SG1②	13-12 SG2①	13-12 SG3①	13-12 ST1①	13-12 ST2①	13-12 ST3①	13-12 SS1①	13-12 SS1②	13-12 SS1③	13-12 SS2①	13-12 SS2②	13-12 SS2③	13-12 SS3①	13-12 SS3②	13-12 SS3③
1	渦鞭毛植物	渦鞭毛藻	Dinophysis fortii	816		1,610												
2	Dinophyta	Dinoflagellate	Gymnodiniales	9,792	12,845	16,104	1,337	554	631									
3			Ceratium furca		2,408	1,610	668	1,663	1,262									
4			Protoperidinium spp.	816	803				631									
5			Scrippsiella sp.	816		805												
6	不等毛植物	珪藻	Skeletonema costatum	55,488	67,435	107,897	14,705	24,394	30,298									
7	Heterokontophyta	diatom	Thalassiosira spp.	48,960	49,774	28,987	12,031	11,088	18,936									
8			Chaetoceros debile	21,216	9,634	19,325	38,767	11,088	22,723									
9			Chaetoceros decipiens			16,104	12,031	7,762										
10			Chaetoceros didymum	6,528														
11			Chaetoceros lorenzianum	8,160	24,084	6,442		13,306	11,362									
12			Chaetoceros subsecundum		8,028	6,442	8,021											
13			Pleurosigma spp.	4,896	4,817	6,442	668	554	631									
			Total	157,488	179,828	211,768	88,228	70,409	86,474	0	0	0	0	0	0	0	0	0

Amount of sample water(L)	1	1	1	1	1	1	1	1	1	1	1	1	1	1	1
Amount of cincentrated water(ml)	10	10	10	10	10	10	0.5	0.5	0.5	0.5	0.5	0.5	0.5	0.5	0.5
Amount of concentrated test water(ml)	0.1	0.1	0.1	0.1	0.1	0.1	0.5	0.5	0.5	0.5	0.5	0.5	0.5	0.5	0.5
Amount of sample test water (L)	0.01	0.01	0.01	0.01	0.01	0.01	1	1	1	1	1	1	1	1	1

Table4-1 Test result with S size group zooplakton (viable organisms)

Unit : inds./L

No	門	綱（亜綱）	種 species	2013/9/23			2013/9/24											
				Original water			Control water			Treated water								
				Beg	Mid	End	Beg	Mid	End	Beg			Mid			End		
				13-12 SG1②	13-12 SG2①	13-12 SG3①	13-12 ST1①	13-12 ST2①	13-12 ST3①	13-12 SS1①	13-12 SS1②	13-12 SS1③	13-12 SS2①	13-12 SS2②	13-12 SS2③	13-12 SS3①	13-12 SS3②	13-12 SS3③
1	繊毛虫	Kinetofragminophorea	Mesodinium rubrum	57,000	92,000	132,500	13,500	8,500	7,000									
2	Protozoa		Tintinnopsis beroidea		200													
3			Tintinnopsis sp.	500	500	1,500												
4			Helicostomella longa	3,000	3,500	2,500	1,000	500										
5			Eutintinnus turris		100		100		100									
6			Eutintinnus sp.	4,500	3,500	4,000	1,000											
7			Oligotrichida	2,000	1,500	500												
8		―	Ciliophora	300	1,500	2,000	3,500	2,000	3,000									
9	Rotifera	Rotifiera	Synchaeta sp.							1								
10	Mollusca	Bivalvia	Bivalvia (D-shaped larva)	100	100			100	400									
11	Chordata	Larvacea	Oikopleura sp.		100	100												
			Total	67,400	103,000	143,100	19,100	11,100	10,500	1	0	0	0	0	0	0	0	0

Amount of sample water(L)	1	1	1	1	1	1	1	1	1	1	1	1	1	1	1
Amount of concentrated water (ml)	10	10	10	10	5	5	0.5	0.5	0.5	0.5	0.5	0.5	0.5	0.5	0.5
Amount of concentrated test water (ml)	0.1	0.1	0.1	0.1	0.05	0.05	0.5	0.5	0.5	0.5	0.5	0.5	0.5	0.5	0.5
Amount of sample test water (L)	0.01	0.01	0.01	0.01	0.01	0.01	1	1	1	1	1	1	1	1	1

Table5-1(2) Test result with L size group phytoplankton (viable organisms)

Unit : inds/m^3

No	門	綱	種 species	2013/9/23			2013/9/24											
				Original water			Control water			Treated water								
				Beg	Mid	End	Beg	Mid	End	Beg			Mid			End		
				13-12 LG①	13-12 LG②	13-12 LG③	13-12 LT1	13-12 LT2	13-12 LT3	13-12 LS1①	13-12 LS1②	13-12 LS1③	13-12 LS2①	13-12 LS2②	13-12 LS2③	13-12 LS3①	13-12 LS3②	13-12 LS3③
1	Dinophyta	Dinoflagellate	Noctiluca scintillans	3,528	7,764			732										
2			Pyrophacus steinii			4,002		732										
3			Protoperidinium spp.	3,528			790	732	676									
4	Heteroontophyta	Diatom	Coscinodiscus asteromphalus	222,264	368,790	376,188	174,195	138,348	177,112									
5			Coscinodiscus sp.	31,752	31,056	28,014	4,345	1,830	4,056									
			Total	261,072	407,610	408,204	179,330	142,374	181,844	0	0	0	0	0	0	0	0	0

Amount of sample water (m^3)	1	1	1	1	1	1	1	1	1	1	1	1	1	1	1	1	1
Amount of concentrated water (ml)	600	600	600	50	50	50	3	3	3	3	3	3	3	3	3	3	3
Amount of concentrated test water (ml)	0.1	0.1	0.1	0.1	0.1	0.1	3	3	3	3	3	3	3	3	3	3	3
Amount of sample test water (m^3)	0.0002	0.0002	0.0002	0.002	0.002	0.002	1	1	1	1	1	1	1	1	1	1	1

Table6-1 Test result with L size group zooplankton (viable organisms)

Unit : inds./m^3

No	門	綱（亜綱）	種 species	2013/9/23			2013/9/24											
				Original water			Control water			Treated water								
				Beg	Mid	End	Beg	Mid	End	Beg			Mid			End		
				13-12 LG①	13-12 LG②	13-12 LG③	13-12 LT1	13-12 LT2	13-12 LT3	13-12 LS1①	13-12 LS1②	13-12 LS1③	13-12 LS2①	13-12 LS2②	13-12 LS2③	13-12 LS3①	13-12 LS3②	13-12 LS3③
1	Ciliophora	多膜	Favella ehrenbergii	84,000	102,000	128,000	8,000											
2	Rotifera	Rotifer	Synchaeta sp.	8,000	10,000	6,000	14,000	11,000	12,500									
3	Mollusca	Bivalia	Bivalvia (umbo larva)		6,000	1,000	30	0										
4	Annelida	Polychaeta	Polychaeta (larva)			2,000		2,000										
5	Arthropoda	Branchipoda	Penilia avirostris		2,000													
6			Evadne tergestina	10,000	12,000	20,000	1,500	100	1,500									
7		Copepoda	Acartia sinjiensis	1,000	1,000	2,000	240	105	120									
8			Acartia sp. (copepodite)	2,000		3,000	45	84	15		1							
9			Paracalanus parvus			1,000												
10			Paracalanus sp. (copepodite)	2,000	8,000	3,000	225	210	75									
11			Temora sp. (copepodite)	1,000		1,000												
12			Oithona brevicornis		2,000				15									
13			Oithona davisae	1,000	1,000		300	315	150									
14			Oithona nana	4,000			45	126	75									
15			Oithona spp. (copepodite)	10,000	14,000	4,000	525	525	600			1						
16			Euterpina acutifrons (copepodite)	1,000	8,000	1,000	75	315	75									
17			Oncaea sp.	1,000				21	15									
18			Oncaea sp. (copepodite)	2,000				21										
19			Hemicyclops sp. (copepodite)				15	42	30									
20			Copepoda (nauplius)	50,000	44,000	26,000	3,200	945	750									
21		Crustacean)	Balanomorpha (nauplius)	4,000	4,000	2,000	660	3,000	1,000									
22			Balanomorpha (cypris)				100											
23	Chaetognatha	Arrow warm	Sagitta spp. (juvenile)	1,000		1,000	100											
24	Chordata	Larvacea	Oikopleura dioica	4,000	2,000	2,000												
			Total	186,000	216,000	203,000	29,060	18,809	16,920	0	1	1	0	0	0	0	0	0
			Acari				1			2	2	2	1	1	4	1		1
			Amount of sample water(m^3)	1	1	1	1	1	1	1	1	1	1	1	1	1	1	1
			Amount of concentrated water (ml)	200	200	200	50	50	100	3	3	3	3	3	3	3	3	3
			Amount of concentrated test water (ml)	0.2	0.2	0.2	0.5	0.5	1	3	3	3	3	3	3	3	3	3
			Amount of sample test water (m^3)	0.001	0.001	0.001	0.01	0.01	0.01	1	1	1	1	1	1	1	1	1

Table7-1 S size group organisms

Unit:inds./ml

Organism \ sample	2013/9/23			2013/9/24											
	Original water			Control water			Treated water								
	Beg	Mid	End	Beg	Mid	End	Beg			Mid			End		
	13-12 SG1②	13-12 SG2①	13-12 SG3①	13-12 ST1①	13-12 ST2①	13-12 ST3①	13-12 SS1①	13-12 SS1②	13-12 SS1③	13-12 SS2①	13-12 SS2②	13-12 SS2③	13-12 SS3①	13-12 SS3②	13-12 SS3③
Phytoplankton	157	180	212	88	70	86	0	0	0	0	0	0	0	0	0
Zooplankton	67	103	143	19	11	11	0	0	0	0	0	0	0	0	0
Total of viable organisms	224	283	355	107	81	97	0	0	0	0	0	0	0	0	0

Table7-2 L size group organisms

Unit : inds./m^3

Organisms \ Sample	2013/9/23			2013/9/24											
	Original water			Control water			Treated water								
	Beg	Mid	End	Beg	Mid	End	Beg			Mid			End		
	13-12 LG①	13-12 LG②	13-12 LG③	13-12 LT1	13-12 LT2	13-12 LT3	13-12 LS1①	13-12 LS1②	13-12 LS1③	13-12 LS2①	13-12 LS2②	13-12 LS2③	13-12 LS3①	13-12 LS3②	13-12 LS3③
Phytoplankton	261,072	407,610	408,204	179,330	142,374	181,844	0	0	0	0	0	0	0	0	0
Zooplankton	186,000	216,000	203,000	29,060	18,809	16,920	0	1	1	0	0	0	0	0	0
Total of viable organisms	447,072	623,610	611,204	208,390	161,183	198,764	0	1	1	0	0	0	0	0	0

Sample list (1)　Testcycle 3（Jan 9 ,2014～　Jan 11 ,2014）

L size plankton（500ml polypropylene container）

No	Size	Test water	Timing of sampling	The number of same sample	Sample container	The number of same sample
Testcycle 3	L	Original water	Beg		13- 18　LG1①	○
			Mid		13- 18　LG1②	○
			End		13- 18　LG1③	○
		Treated water	Beg	①	13- 18　LS1①	○
				②	13- 18　LS1②	○
				③	13- 18　LS1③	○
			Mid	①	13- 18　LS2①	○
				②	13- 18　LS2②	○
				③	13- 18　LS2③	○
			End	①	13- 18　LS3①	○
				②	13- 18　LS3②	○
				③	13- 18　LS3③	○
		Control water	Beg		13- 18　LT1	○
			Mid		13- 18　LT2	○
			End		13- 18　LT3	○

S size Plankton（1L polypropylene container）

No.	Size	Test water	Timing of sampling	The number of same sample	Sample container	The number of same sample
Testcycle 3	S	Original water	Beg	①	13- 18　SG1①	A specimen with most amount of plankton is adopted among 3 specimens
				②	13- 18　SG1②	
				③	13- 18　SG1③	
			Mid	①	13- 18　SG2①	A specimen with most amount of plankton is adopted among 3 specimens
				②	13- 18　SG2②	
				③	13- 18　SG2③	
			End	①	13- 18　SG3①	A specimen with most amount of plankton is adopted among 3 specimens
				②	13- 18　SG3②	
				③	13- 18　SG3③	
		Treated water	Beg	①	13- 18　SS1①	○
				②	13- 18　SS1②	○
				③	13- 18　SS1③	○
			Mid	①	13- 18　SS2①	○
				②	13- 18　SS2②	○
				③	13- 18　SS2③	○
			End	①	13- 18　SS3①	○
				②	13- 18　SS3②	○
				③	13- 18　SS3③	○
		Contol water	Beg	①	13- 18　ST1①	A specimen with most amount of plankton is adopted among 3 specimens
				②	13- 18　ST1②	
				③	13- 18　ST1③	
			Mid	①	13- 18　ST2①	A specimen with most amount of plankton is adopted among 3 specimens
				②	13- 18　ST2②	
				③	13- 18　ST2③	
			End	①	13- 18　ST3①	A specimen with most amount of plankton is adopted among 3 specimens
				②	13- 18　ST3②	
				③	13- 18　ST3③	

Sample list (2) Testcycle3 (Jan 9 ,2014 ～ Jan 11 ,2014)

Bacteria (500ml Corner polypropylene container)

No.	Size	Test water	Timing of sampling	The number of same sample	Sample container	The specimen which was adopted the lastdata
Testcycle 3	–	Original water	Beg		13- 18 G1	○
			Mid		13- 18 G2	○
			End		13- 18 G3	○
		Treated water	Beg	①	13- 18 S1①	○
				②	13- 18 S1②	○
				③	13- 18 S1③	○
			Mid	①	13- 18 S2①	○
				②	13- 18 S2②	○
				③	13- 18 S2③	○
			End	①	13- 18 S3①	○
				②	13- 18 S3②	○
				③	13- 18 S3③	○
		Control water	Beg		13- 18 T1	○
			Mid		13- 18 T2	○
			End		13- 18 T3	○

Water Quality (2 L Black polypropylene container)

No.	Size	Test water	Timing of sampling	The number of same	Sample container	The specimen which was adopted the lastdata
Testcycle 3	–	Original water	Mid		13- 18 G2	○
		Treated water	Mid		13- 18 S2	○
		Control water	Mid		13- 18 T2	○

Table 1 .Test result with water quality

Date	Water	Timing of sample	Sample name	TSS mg/L	POC mg/L	Salinity	Temperature (℃)
2014/1/9	Original water	Mid	13-18-G2	2	0.46	32.00	12.1
2014/1/11	Control water	Mid	13-18-S2	1	0.23	32.37	15.1
	Treated water	Mid	13-18-T2	1	0.37	32.19	14

Table 2 . Test result with bacteria

Date	Test water	Timing of sampling	The number of same sample	Sample name	Vibrio cholera (cfu/100ml)	scherichia col (cfu/100ml)	Entero cocci (cfu/100ml)
2014/1/9	Original water	Beg		13-18 G1	0	410	130
		Mid		13-18 G2	0	270	160
		End		13-18 G3	0	60	53
2014/1/11	Treated water	Beg	①	13-18 S1①	0	0	0
			②	13-18 S1②	0	0	0
			③	13-18 S1③	0	0	0
		Mid	①	13-18 S2①	0	0	0
			②	13-18 S2②	0	0	0
			③	13-18 S2③	0	0	0
		End	①	13-18 S3①	0	0	0
			②	13-18 S3②	0	0	0
			③	13-18 S3③	0	0	0
	Control water	Beg		13-18 T1	0	1,900	220
		Mid		13-18 T2	0	1,900	315
		End		13-18 T3	0	1,200	330

Table3-1(2)　S size group phytoplakton (viable organisms)

Unit :inds./L

No	門	綱	種 Species	2014/1/9			2014/1/11											
				Original water			Contorl water			Treated water								
				Beg	Mid	End	Beg	Mid	End	Beg			Mid			End		
				13-18 SG1①	13-18 SG2①	13-18 SG3③	13-18 ST①	13-18 ST②	13-18 ST③	13-18 SS1①	13-18 SS1②	13-18 SS1③	13-18 SS2①	13-18 SS2②	13-18 SS2③	13-18 SS3①	13-18 SS3②	13-18 SS3③
1	渦鞭毛植物	渦鞭毛藻	Prorocentrum triestinum	554														
2	Dinophyta	Dinoflagellate	Oxyphysis oxytoxoides	554														
3			Gymnodiniales	1,661	2,802	970	477	275	138									
4			Ceratium furca	1,108		485	239	138										
5			Protoperidinium sp.			485												
6	不等毛植物	珪藻	Skeletonema costatum	937,030	643,339	536,189	157,410	155,326	120,468									
7	Heterokontophyta	Diatom	Thalassiosira nordenskioeldii	14,399		1,939		1,102										
8			Thalassiosira spp.	12,184	5,044	1,939	2,147	2,616	1,650									
9			Guinardia flaccida	554														
10			Rhizosolenia setigera		560													
11			Chaetoceros affine	6,092	19,054	3,878	1,670	4,957	3,576									
12			Chaetoceros debile		11,768	10,666	2,624	7,160	14,852									
13			Chaetoceros decipiens	2,769				413										
14			Chaetoceros didymum	22,152				964										
15			Chaetoceros sociale		5,044	10,666												
16			Chaetoceros subsecundum	11,076	23,537			4,406	2,200									
17			Ditylum brightwellii		560	485	239	138										
			Total	1,010,133	711,708	567,702	164,806	177,495	142,884	0	0	0	0	0	0	0	0	0

Amount of sample water(L)	1	1	1	1	1	1	1	1	1	1	1	1	1	1	1
Amount of cincentrated water(ml)	120	120	120	120	36	36	0.5	0.5	0.5	0.5	0.5	0.5	0.5	0.5	0.5
Amount of concentrated test water(ml)	0.1	0.1	0.1	0.1	0.1	0.1	0.5	0.5	0.5	0.5	0.5	0.5	0.5	0.5	0.5
Amount of sample test water (L)	0.001	0.001	0.001	0.001	0.003	0.003	1	1	1	1	1	1	1	1	1

Table4-1 Test result with S size group zooplakton (viable organisms)

Unit : inds./L

No	門	綱（亜綱）	種 Species	2014/1/9			2014/1/11											
				Original water			Control water			Treated water								
				Beg	Mid	End	Beg	Mid	End	Beg			Mid			End		
				13-18 SG1①	13-18 SG2①	13-18 SG3③	13-18 ST①	13-18 ST②	13-18 ST③	13-18 SS1①	13-18 SS1②	13-18 SS1③	13-18 SS2①	13-18 SS2②	13-18 SS2③	13-18 SS3①	13-18 SS3②	13-18 SS3③
1	繊毛虫	Kinetofragminophorea	Mesodinium rubrum	10	10													
2	Protozoa		Tintinnopsis beroidea	20	10	30		10	10									
3			Tintinnopsis sp.			10			10									
4			Eutintinnus sp.						10									
5			Oligotrichida	10			10	10	20									
6		―	Ciliophora	10			10	10	10									
7	Mollusca	Bivalvia	Bivalvia (D-shaped larva)	30	10	10			10									
8	Arthropoda	Copepoda	Copepoda (nauplius)	20	10	10		10	10									
			Total	100	40	60	20	40	80	0	0	0	0	0	0	0	0	0

Amount of sample water(L)	1	1	1	1	1	1	1	1	1	1	1	1	1	1	1	1
Amount of concentrated water (ml)	1	1	1	1	1	1	0.5	0.5	0.5	0.5	0.5	0.5	0.5	0.5	0.5	0.5
Amount of concentrated test water (ml)	0.1	0.1	0.1	0.1	0.1	0.1	0.5	0.5	0.5	0.5	0.5	0.5	0.5	0.5	0.5	0.5
Amount of sample test water (L)	0.1	0.1	0.1	0.1	0.1	0.1	1	1	1	1	1	1	1	1	1	1

Table5-1(2) Test result with L size group phytoplankton (viable organisms)

Unit : inds/m^3

No	門	綱	種 species	2014/1/9			2014/1/11											
				Original water			Control water			Treated water								
				Beg	Mid	End	Beg	Mid	End	Beg			Mid			End		
				13-18 LG①	13-18 LG②	13-18 LG③	13-18 LT1	13-18 LT2	13-18 LT3	13-18 LS1①	13-18 LS1②	13-18 LS1③	13-18 LS2①	13-18 LS2②	13-18 LS2③	13-18 LS3①	13-18 LS3②	13-18 LS3③
1	Dinophyta	Dinoflagellate	Gymnodinium sanguineum	32,305	872	3,540	75	95	94									
2			Gymnodiniales	4,615	872	2,655												
3			Protoperidinium spp.	2,769	872	885												
4	Heteroontophyta	Diatom	Coscinodiscus spp.	3,692	8,720	15,930	1,650	1,622	938									
5			Ditylum brightwellii			885	75		188									
			Total	43,381	11,336	23,895	1,800	1,717	1,220	0	0	0	0	0	0	0	0	0

Amount of sample water (m^3)	1	1	1	1	1	1	1	1	1	1	1	1	1	1	1	1	1
Amount of concentrated water (ml)	100	100	100	15	15	15	5	5	5	5	5	5	5	5	5	5	5
Amount of concentrated test water (ml)	0.1	0.1	0.1	0.1	0.1	0.1	5	5	5	5	5	5	5	5	5	5	5
Amount of sample test water (m^3)	0.001	0.001	0.001	0.01	0.01	0.01	1	1	1	1	1	1	1	1	1	1	1

Table6-1 Test result with L size group zooplankton (viable organisms)

Unit : inds./m^3

No	門	綱（亜綱）	種 species	2014/1/9			2014/1/11											
				Original water			Control water			Treated water								
				Beg	Mid	End	Beg	Mid	End	Beg			Mid			End		
				13-18 LG①	13-18 LG②	13-18 LG③	13-18 LT1	13-18 LT2	13-18 LT3	13-18 LS1①	13-18 LS1②	13-18 LS1③	13-18 LS2①	13-18 LS2②	13-18 LS2③	13-18 LS3①	13-18 LS3②	13-18 LS3③
1	Mollusca	Bivalia	Bivalvia (umbo larva)	312	144	110												
2	Annelida	Polychaeta	Polychaeta (larva)	1456	576	876	27	22	22									
3	Arthropoda	Copepoda	Acartia omorii	104	432	438	81	198	132									
4			Acartia sp. (copepodite)	1144	720	146	27	44	44									
5			Paracalanus crassirostris		144			44	22									
6			Paracalanus parvus	104	144	584	27	44	44									
7			Paracalanus sp. (copepodite)	520	576	1314	108	154	220									
8			Centropages abdominalis			146		44	44									
9			Centropages sp. (copepodite)	208	432	146	27	22										
10			Pseudodiaptomus sp. (copepodite)						22									
11			Oithona davisae	416	1296	730	324	88	66									
12			Oithona similis						44									
13			Oithona spp. (copepodite)	1352	2160	876	189	154	154									
14			Corycaeus sp. (copepodite)	104														
15			Cyclopoida (copepodite)						22									
16			Hemicyclops sp. (copepodite)		144				44									
17			Copepoda (nauplius)	1144	1296	1168	54	88	66									
18		Crustacean	Balanomorpha (nauplius)	104														
19			Balanomorpha (cypris)					22										
20		Malacostraca	Macrura(zoea)		144													
21	Chaetognatha	Arrow warm	Sagitta crassa				27	22	22									
22			Sagitta spp. (juvenile)	104	288	292	27	44	132									
23	Echinodermata	Ophiuroidea	Oikopleura dioica	104														
			Total	7,176	8,496	6,826	918	990	1,100	0	0	0	0	0	0	0	0	0
			Amount of sample water(m^3)	1	1	1	1	1	1	1	1	1	1	1	1	1	1	1
			Amount of concentrated water (ml)	52	72	73	13.5	11	11	5	5	5	5	5	5	5	5	5
			Amount of concentrated test water (ml)	0.5	0.5	0.5	0.5	0.5	0.5	5	5	5	5	5	5	5	5	5
			Amount of sample test water (m^3)	0.010	0.007	0.007	0.04	0.05	0.05	1	1	1	1	1	1	1	1	1

Table7-1 S size group organisms

Unit : inds./m l

Organisms \ Sample	2014/1/9			2014/1/11											
	Original water			Control water			Treated water								
	Beg	Mid	End	Beg	Mid	End	Beg			Mid			End		
	13-18 SG1①	13-18 SG2①	13-18 SG3③	13-18 ST①	13-18 ST②	13-18 ST③	13-18 SS1①	13-18 SS1②	13-18 SS1③	13-18 SS2①	13-18 SS2②	13-18 SS2③	13-18 SS3①	13-18 SS3②	13-18 SS3③
Phytoplankton	1,010	712	568	165	177	143	0	0	0	0	0	0	0	0	0
Zooplankton	0	0	0	0	0	0	0	0	0	0	0	0	0	0	0
Total of viable organisms	1,010	712	568	165	177	143	0	0	0	0	0	0	0	0	0

Table7-2 L size group organisms

Unit : inds./m^3

Organisms \ Sample	2014/1/9			2014/1/11											
	Original water			Control water			Treated water								
	Beg	Mid	End	Beg	Mid	End	Beg			Mid			End		
	13-18 LG①	13-18 LG②	13-18 LG③	13-18 LT1	13-18 LT2	13-18 LT3	13-18 LS1①	13-18 LS1②	13-18 LS1③	13-18 LS2①	13-18 LS2②	13-18 LS2③	13-18 LS3①	13-18 LS3②	13-18 LS3③
Phytoplankton	43,381	11,336	23,895	1,800	1,717	1,220	0	0	0	0	0	0	0	0	0
Zooplankton	7,176	8,496	6,826	918	990	1,100	0	0	0	0	0	0	0	0	0
Total of viable organisms	50,557	19,832	30,721	2,718	2,707	2,320	0	0	0	0	0	0	0	0	0

OPERATIONAL TEST RECORD

Title

No	Date	Location	Details
1	July 23, 2013	OSANBASI YOKOHAMA	Ballasting
2	July 25, 2013	HAKODATE	De-ballasting
3	August 1, 2013	OSANBASI YOKOHAMA	Ballasting
4	August 1, 2013	OSANBASI YOKOHAMA	De-ballasting
5	September 23, 2013	OSANBASI YOKOHAMA	Ballasting
6	September 24, 2013	NAGOYA PORT	De-ballasting
7	October 19, 2013	JEJU ISLAND	Sea to sea
8	December 4, 2013	KEELUNG	Sea to sea
9	December 5, 2013	KAREN	Sea to sea
10	January 8, 2014	SHIMIZU PORT	Ballasting
11	January 9, 2014	OSANBASI YOKOHAMA	Ballasting
12	January 11, 2014	NAGOYA PORT	De-ballasting

Appendix

- Irregular maintenance records

DOCUMENT No.c-5

ECOMARINE OPERATIONAL TEST REPORT

Date JULY 23 2013

Location OSANBASHI YOKOHAMA (ex.OSANBASHI YOKOHAMA)

DETAILS Ballasting De-ballasting sea to sea

Tank No. #1WBT

Tank capacity 333.7 m3

Treatment flow rate 200 m3/h

Treatment time 13:02 ～ 14:22

Change in water volume in tank 52.4 → 291.9 ton Ballasting De-ballasting volume 239.5 ton

・Filtration

	Unit1		Unit2		
Time (:)	Inner pressure (kpa)	Outlet pressure (kpa)	Inner pressure (kpa)	Outlet pressure (kpa)	Treatment flow rate (m3/h)
13:22	93.9	91.3	92.7	90.3	204
14:02	107	105	106	104	202

・UV Irradiation

Time (:)	UV intensity (W/m2)	Power consumption (kW)	UV dose (mJ/cm2)
13:22	135	9.7	117
14:02	128	11	111

System trouble YES or No

If yse,describe below

Remarke

Invalidated test（Control water:L size plankton:446278inds./m3 Ssizeplankton：84inds./cm3）

Document No.

ECOMARINE OPERATIONAL TEST REPORT

Date JULY 25, 2013

Location HAKODATE (ex.Osanbashi Yokoyama

DETAILS Ballasting (De-ballasting) sea to sea

Tank No. #1WBT

Tank capacity 333.7 m3

Treatment flow rate 200 m3/h

Treatment time 12:18 ～ 13:32

Change in water volume in tank 291.0 → 22.9 ton Ballasting (De-ballasting) volume 268.1 ton

・Filtration

	Unit1		Unit2		
Time (:)	Inner pressure (kpa)	Outlet pressure (kpa)	Inner pressure (kpa)	Outlet pressure (kpa)	Treatment flow rate (m3/h)
12:38					202
13:18					203

・UV irradiation

Time	UV intensity (W/m2)	Power consumption (kW)	UV DOSE (mJ/cm2)
12:38	123	13.4	107
13:18	123	13.4	107

System troble YES or (No)

If yes, describe below

Remarks

Invalidated test(treated water : L size plankton:0.6 inds/m3 S size plankton:0 inds/cm3)
(Control water: L size plankton:103701 inds/m3 S size plankton:87 inds/cm3)

Document No.c-5

ECOMARINE OPERATIONAL TEST REPORT

Date AUG 1, 2013

Location OSANBASHI YOKOHAMA (ex.Osanbashi YOKOHAMA)

DETAILS Ballasting De-ballasting sea to sea

Tank No. #1WBT

Tank capacity 333.7 m3

Treatment flow rate 200 m3/h

Treatment time 13:52 ～ 15:20

Change in water volume in tank 47.49 → 315.9 ton Ballasting De-ballastng volume 268.41 ton

・Filtration

	Unit1		Unit2		
Time (:)	Inner pressure (kpa)	Outlet pressure (kpa)	Inner pressure (kpa)	Outlet pressure (kpa)	Treatment flow rate (m3/h)
14:20	103.2	99.2	100	98.2	204
15:00	117	114	116	114	201

UV irradiation

Time (:)	UV intensity (W/m2)	Power consumption (kW)	UV DOSE (mJ/cm2)
14:20	128	11.3	111
15:00	115	10.7	100

System troble yes or No

If yes, describe below

Remarks

Validated test :Ballasting 1st Data

Document No.c-5

ECOMARINE OPERATIONAL TEST REPORT

Date AUG 1, 2013

Location OSANBASHI YOKOHAMA (ex.Osanbashi Yokohama)

DETAILS Ballasting (De-ballasting) sea to sea

Tank No. #1WBT

Tank capacity 333.7 m3

Treatment flow rate 200 m3/h

Treatment time 15:40 ～ 16:57

Change in water volume in tank 315.9 → 28.81 ton Ballasting (De-ballasting) volume 287.09 ton

Filtration

	Unit 1		Unit 2		
Time (:)	Inner pressure (kpa)	Outlet pressure (kpa)	Inner pressure (kpa)	Outlet pressure (kpa)	Treatment flow rate (m3/h)
16:00					200
16:40					206

・UV irradiation

Time	UV intensitu (W/m2)	UV consumption (kW)	UV dose (mJ/cm2)
16:00	128	11.3	111
16:40	124	11.3	108

System trouble yes or (No)

If yes,,describe below

Remarks

Validated test :De-ballasting 1st Data

Document No.c-5

ECOMARINE OPERATIONAL TEST REPORT

Date SEP 23, 2013

Location OSANBASHI YOKOHAMA (ex.Osanbashi Yokohama)

DETAILS Ballasting De-ballasting sea to sea

Tank No. #1WBT

Tank capacity 333.7 m3

Treatment flow rate 200 m3/h

Treatment time 12:41 ～ 14:07

Change in water volume in tank 51.85 → 306.10 ton Ballasting De-ballasting volume 255.25 ton

・Filtration

	Unit1		Unit2		
Time (:)	Inner pressure (kpa)	outlet pressure (kpa)	Inner pressure (kpa)	outlet pressure (kpa)	Treatment flow rate (m3/h)
13:13	72.8	69	69.4	67.8	202
13:50	87.2	83.2	84.8	81.9	204

・UV irradiation

Time (:)	UV intensity (W/m2)	Power consumption (kW)	UV dose (mJ/cm2)
13:13	127	12.9	110
13:50	123	130	107

System trouble yes or No

If yes, describe below.

Remarks

Validated test :Ballasting 2nd Data

Document No.c-5

ECOMARINE OPERATIONAL TEST REPORT

Date Sep 24, 2013

Location NAGOYA (ex.Osanbashi Yokohama)

DETAILS Ballasting (De-ballasting) sea to sea

Tank No. #1WBT

Tank capacity 333.7 m3

Treatment flow rate 200 m3/h

Treatment time 9:50 ～ 11:07

Change in water volume in tank 306.1 → 64.49 ton Ballasting (De-ballasting) volume 242.51 ton

・Filtration

	Unit1		Unit2		
Time (:)	Inner pressure (kpa)	Outlet pressure (kpa)	Inner pressure (kpa)	Outlet pressure (kpa)	Treatment flow rate (m3/h)
10:11					205
10:59					203

・UV irradiation

Time	UV intensity (W/m2)	Power consumption (kW)	UV dose (mJ/cm2)
10:11	124	137	108
10:59	124	134	108

System trouble yes or (No)

If yes, describe below.

Remarks

Validated test :De-ballasting 2nd Data

Document No.c-5

ECOMARINE OPERATIONAL TEST REPORT

Date OCT 19, 2013

Location JEJU ISLAND (ex.Osanbashi Yokohama)

DETAILS Ballasting De-ballasting (sea to sea)

Tank No.

Tank capacity m3

Treatment flow rate 200 m3/h

Treatment time 11:25 ～ 12:31

Change in water volume in tank → ton

Ballasting De-ballasting volume ton

・Filtration

	Unit1		Unit2		
time (:)	Inner pressure (kpa)	Outlet pressure (kpa)	Inner pressure (kpa)	Outlet pressure (kpa)	Treatment flow rate (m3/h)
11:35	83.9	80.4	80.9	78.8	206
11:53	83.7	79.7	80.7	78.6	209

・UV irradiation

Time	UV intensity (W/m2)	Power consumption (kW)	UV dose (mJ/cm2)
11:35	135	9.6	117
11:53	128	9.5	111

System trouble Yes or (No)

If yes,describe below

Remarks

Operational test

Document No.c-5

ECOMARINE OPERATIONAL TEST REPORT

Date DEC 4, 2013

Location KEELUNG (ex.Osanbashi Yokohama)

DETAILS Ballasting De-ballasting Sea to sea

Tank No.

Tank capacity m3

Treatment flow rate 200 m3/h

Treatment time 13:39 ～ 14:55

Change in water volume in tank → ton

Ballasting De-ballasting volume ton

・Filtration

	Unit 1		Unit 2		
Time (:)	Inner pressure (kpa)	Outlet pressure (kpa)	Inner pressure (kpa)	Outlet pressure (kpa)	Treatment flow rate (m3/h)
13:51	89.9	86.5	87.7	85.3	210
14:03	90.3	87	88.1	86.1	209

・UV irradiation

Time	UV intensity (W/m2)	Power consumption (kW)	UV dose (mJ/cm2)
13:51	128	10.4	111
14:03	127	10	110

System trouble Yes or No

If yes, describe below

Remarks

Operational test

Document No.c-5

ECOMARINE OPERATIONAL TEST REPORT

Date DEC 5, 2013

Location KAREN (ex.Osanbashi Yokohama)

DETAILS Ballasting Deballasting Sea to sea

Tank No.

Tank capacity m3

Treatment flow rate 200 m3/h

Treatment time 11:36 ～ 12:59

Change in water volume in tank → ton

Ballasting De-ballasting volume ton

・Filtration

	Unit 1		Unit 2		
Time (:)	Inner pressure (kpa)	Outlet pressure (kpa)	Inner pressure (kpa)	Outlet pressure (kpa)	Treatment flow rate (m3/h)
12:00	89.8	86.3	87.2	85.1	208
12:30	91.2	87.5	88.4	86.2	208

・UV irradiation

Time	UV intensity (W/m2)	Power consumption (kW)	UV dose (mJ/cm2)
12:00	127	9.5	110
12:30	124	9.3	108

System trouble Yes or No

If yes, describe below

Remarks

Operational test

Document No.c-5

ECOMARINE OPERATIONAL TEST REPORT

Date JAN 8, 2014

Location SHIMIZU (ex.Osanbashi Yokohama)

DETAILS Ballasting De-ballasting Sea to sea

Tank No. #1WBT

Tank capacity 333.7 m3

Treatment flow rate 200 m3/h

Treatment time 13:42 ～ 15:07

Change in water volume in tank 11.23 → 247.35 ton Ballasting De-ballasting volume 236.1 ton

・Fitration

	Unit 1		Unit 2		
Time (:)	Inner pressure (kpa)	Outlet pressure (kpa)	Inner pressure (kpa)	Outlet pressure (kpa)	Treatment flow rate (m3/h)
14:00	70.4	67.3	68.7	65.8	201
14:40	70.8	67.3	67.6	65.8	204

・UV irradiation

Time	UV intensity (W/m2)	Power consumption (kW)	UV dose (mJ/cm2)
14:00	130	9.4	113
14:40	120	8.9	104

System trouble Yes or No

If yes, describe below.

Remarks

Operational test

Document No.c-5

ECOMARINE OPERATIONAL TEST REPORT

Date JAN 9, 2014

Location OSANBASHI YOKOHAMA (ex.Osanbashi Yokohama)

DETAILS Ballasting De-ballasting Sea to sea

Tank No. #1WBT

Tank capacity 333.7 m3

Treatment flow rate 200 m3/h

Treatment time 13:22 ～ 14:46

Change in water volume in tank 28.45 → 306.68 ton Ballasting De-ballasting volume 278.83 ton

・Filtration

	Unit 1		Unit 2		
Time (:)	Inner pressure (kpa)	Outlet pressure (kpa)	Inner pressure (kpa)	Outlet pressur (kpa)	Treatment flow rate (m3/h)
13:42	74.2	69.5	70.1	68.1	202
14:46	94.2	90.3	91.1	89.1	203

・UV irradiation

Time	UV intensity (W/m2)	Power consumption (kW)	UV dose (mJ/cm2)
13:42	140	11	122
14:46	130	10	113

System trouble Yes or No

If yes, describe below.

Remarks

Validated test :Ballasting 3rd Data

Document No.c-5

ECOMARINE OPERATIONAL TEST REPORT

Date JAN 11, 2014

Location NAGOYA (ex.Osanbashi Yokohama)

DETAILS Ballasting De-ballasting Sea to sea

Tank No. #1WBT

Tank capacity 333.7 m3

Treatment flow rate 200 m3/h

Treatment time 11:27 ～ 12:40

Change in water volume in tank 306.68 → 59.69 ton Ballasting De-ballasting volume 246.99 ton

・Filtration

	Unit 1		Unit 2		
Time (:)	Inner pressure (kpa)	Outlet pressure (kpa)	Inner pressure (kpa)	Outlet pressure (kpa)	Treatment flow rate (m3/h)
11:46					205
12:40					202

・UV irradiation

Time	UV intensity (W/m2)	Power consumption (kW)	UV dose (mJ/cm2)
11:46	120	10	104
12:40	120	10	104

System trouble Yes or No

If yes, describe below

Remarks

Validated test :De-ballasting 3rd Data

Irregular maintenance logbook

Date	Total operating Time	Conducted work	Maintenance level	Reason (error message)	Conducted by
2012/7/9		Installing new cartridge filters	1	For an investigation	Inoue
2012/8/3		Installing new cartridge filters	1	For an investigation	Inoue
2012/9/1		Installing new cartridge filters	1	For an investigation	Inoue
2013/1/9		Installing new cartridge filters	1	For an investigation	Inoue
2013/7/9		Installing new cartridge filters	1	For an investigation	Inoue
2013/7/21		Installing new UV lamp	1	For UV lamp's confirmation	Inoue

Maintenance level 1：conducted by the operator
Maintenance level 2：conducted by the manufacturer's service personnel or authorized service personnel

2012.3 ～2014.1 Operational test list

	Date	Location	Detail	Ballasting volume(ton)	Before ballasting(ton)	After ballasting(ton)	De-ballsting volume(ton)	Before deballasting(ton)	After deballasting(ton)
2012	3/16	Tokyo	Ballasting	220	30	250			
	3/19	Yokohama	De-ballasting				110	250	140
	3/31	Yokohama	Ballasting	271	20	291			
	4/1	Yokohama	De-ballasting				262	291	29
	4/13	Phuket	sea to sea						
	6/18	SF coast	Ballasting	238	30	268			
		SF coast	De-ballasting				259	268	9
	6/19	SF coast	Ballasting	261	9	270			
		SF coast	De-ballasting				260	270	10
	7/26	Kushiro	Ballasting	150	140	290			
	8/9	Yokohama	Ballasting	282	31	313			
	8/11	Komatsujima	De-ballasting				253	310	57
	8/11	Komatsujima	Ballasting	215	57	272			
	8/16	Yokohama	sea to sea						
	8/20	Yokohama	Ballasting	192	8	200			
	8/24	Yokohama	Ballasting	155	45	200			
	8/24	Yokohama	De-ballasting				140	200	60
	10/9	Osaka	Ballasting	283	7	290			
	10/11	Hakata	Ballasting	246	292	46			
	11/13	Kobe	Ballasting	275	14	289			
	11/14	Yokohama	De-ballasting				262	288	26
	12/16	Kobe	Ballasting	256	9	265			
	12/17	Kobe	De-ballasting				174	260	86
2013	3/15	Ocean of Nagoya	De-ballasting				251	283	32
	3/16	Kobe	Ballasting	271	12	283			
	3/17	Kobe	De-ballasting				252	283	31
	3/18	Yokohama	Ballasting	278	9	287			
	3/19	Yokohama	De-ballasting				263	286	23
	3/22	Yokohama	Ballasting	259	20	279			
	3/23	Yokohama	De-ballasting				209	279	70
	3/28	Yokohama	Ballasting	251	13	264			
	3/29	Yokohama	De-ballasting				205	260	55
	4/1	Yokohama	De-ballasting				237	275	38
	4/2	Yokohama	Ballasting	289	7	296			
	4/3	Yokohama	De-ballasting				260	297	30
	7/23	Yokohama	Ballasting	240	52	292			
	7/25	Hakodate	De-ballasting				268	291	229
	8/1	Yokohama	Ballasting	269	47	316			
	8/1	Yokohama	De-ballasting				287	316	29
	8/3	Yokohama	Intaking control water						
	8/9	Yokohama	Intaking control water						
	8/16	Hakodate	Intaking control water						
	8/19	Yokohama	Intaking control water						
	8/23	Yokohama	Intaking control water						
	8/25	Yokohama	Intaking control water						
	9/6	Hakata	Intaking control water						
	9/15	Kanazawa	Intaking control water						
	9/20	Yokohama	Intaking control water						
	9/23	Yokohama	Ballasting	255	52	306			
	9/24	Nagoya	De-ballasting				243	306	64
	9/28	Kanazawa	Intaking control water						
	10/3	Yokohama	Intaking control water						
	10/19	Jeju island	sea to sea						
	12/4	Keelung	sea to sea						
	12/5	Karen	sea to sea						
2014	1/8	Shimizu	Ballasting	236	11	247			
	1/9	Yokohama	Ballasting	279	28	307			
	1/11	Nagoya	De-ballasting				246	307	60