Technical and Economic Evaluation of Nitrogen and Phosphorus Removal at Municipal Wastewater Treatment Facilities

June 2011
Publication no. 11-10-060

DEPARTMENT OF ECOLOGY
State of Washington

TETRA TECH

Publication and Contact Information

This report is available on the Department of Ecology's website at
http://www.ecy.wa.gov/biblio/1110060.html

For more information contact:

Water Quality Program
P.O. Box 47600
Olympia, WA 98504-7600

Phone: 360-407-6600

Washington State Department of Ecology - www.ecy.wa.gov

o Headquarters, Olympia	360-407-6000
o Northwest Regional Office, Bellevue	425-649-7000
o Southwest Regional Office, Olympia	360-407-6300
o Central Regional Office, Yakima	509-575-2490
o Eastern Regional Office, Spokane	509-329-3400

If you need this document in a format for the visually impaired, call the Water Quality Program at 360-407-6600. Persons with hearing loss can call 711 for Washington Relay Service. Persons with a speech disability can call 877-833-6341.

Washington State Department of Ecology

TECHNICAL AND ECONOMIC EVALUATION OF NITROGEN AND PHOSPHORUS REMOVAL AT MUNICIPAL WASTEWATER TREATMENT FACILITIES

JUNE 2011

Prepared for:
Washington State Department of Ecology
P.O. Box 47600
Olympia, WA 98504

Prepared by:

TETRA TECH
Engineering & Architecture Services
1420 Fifth Avenue, Suite 600, Seattle, WA 98101
Tel (206)883-9300 Fax (206)883-9301 www.tetratech.com

Project #135-20352-09001

ACKNOWLEDGEMENTS

This document was prepared by the following staff from the Seattle, WA office of Tetra Tech, Inc. Engineering and Architecture Services under Washington State Department of Ecology Contract No. C0900228.

John A. Markus, P.E	Project Manager and Principal Author
James A. Santroch, P.E.	Technical Reviewer
Sailaja Tumuluri, EIT	BioWin Modeler and Author
Yun Xi, EIT	CapdetWorks Modeler and Author
Anderson Arifin, EIT	Data Management
Dan Portman	Technical Editor

Foroozan Labib, P.E., of the Washington State Department of Ecology served as the State's project representative.

Funding for this study was provided by the US Environmental Protection Agency under grant through the National Estuary Program. Ecology would like thank the staff from EPA, local governments, and a number of consulting engineers who participated in the workshops, reviewed draft reports, and provided comments. Based on these comments and the discussions of the original scope of work, the project was re-scoped resulting in the development of a generalized cost model applicable to all municipal treatment plants state-wide. Specifically, Ecology and Tetra Tech would like to acknowledge and thank the following organizations and their staff for their input and written comments:

Mahbub Alam, P.E.	Washington State Department of Ecology
Rick Butler	King County Department of Natural Resources and Parks
Jim Carrol	Washington State Department of Ecology
Ryan Dooley, P.E.	Pierce County Sewer Utility
Pam Elardo, P.E.	King County Department of Natural Resources and Parks
Larry Ekstrom	Pierce County
Kathleen Emmett	Washington State Department of Ecology
Mark Henley, P.E.	Washington State Department of Ecology
Richard Koch, P.E	Washington State Department of Ecology
Andrew Kolosseus	Washington State Department of Ecology
James McCauley, P.E.	Washington State Department of Ecology
Bill Moore, P.E.	Washington State Department of Ecology
Brian Nickel	EPA region 10
Bruce Rawls, P.E.	Spokane County Utilities
David Ragsdale	EPA Region 10, Office of Water & Watersheds
Wayne Robinson	LOTT ALLIANCE
Pat Roe, P.E.	HDR Inc.
Elliott Rosenberg	EPA Region 10
Dan Thompson, P.E.	Tacoma Public Works
Ed Thorpe	Coalition for Clean Water (CCW)
Christie True	King County Department of Natural Resources and Parks
River Wan, P,E.	Pierce County
Dave White	King County Department of Natural Resources and Parks
Gregory Zentner, P.E.	Washington State Department of Ecology

Washington State Department of Ecology

Technical and Economic Evaluation of Nitrogen and Phosphorus Removal at Municipal Wastewater Treatment Facilities

TABLE OF CONTENTS

Title *Page No.*

Executive Summary ES-1
Background ES-1
Evaluation Approach for Nutrient Removal ES-1
Evaluation Approach for Water Reclamation ES-4
Summary of Cost Findings ES-5
Nutrient Removal ES-5
Water Reclamation ES-5
Conclusions ES-5
Nitrogen Removal ES-5
Phosphorus Removal ES-6

Chapter 1. Introduction 1-1
1.1 Background 1-1
1.1.1 National Trends 1-1
1.1.2 Washington State Trends 1-2
1.2 Purpose of this Report 1-3
1.3 Development and Organization of the Report 1-3

Chapter 2. Nutrient Removal Objectives and Treatment Plants Evaluated 2-1
2.1 Nutrient Removal Objectives 2-1
2.2 Existing Municipal Wastewater Treatment Plants 2-1
2.2.1 Treatment Process Types 2-4
2.2.2 Treatment Plant Capacity 2-5
2.2.3 Nutrient Removal Quantities 2-6
2.3 Wastewater Flow and Load Characteristics 2-6

Chapter 3. Evaluation Approach 3-1
3.1 Treatment Process Upgrades Evaluated 3-1
3.2 Biowin Modeling 3-1
3.2.1 Modeling Assumptions 3-1
3.2.2 Modeling Design Criteria 3-3
3.3 Cost Evaluation 3-4
3.3.1 Treatment Plant Capacities Evaluated 3-4
3.3.2 Unit Costs and Rates 3-5
3.3.3 Assumptions and Methods 3-5
3.3.4 Use of Cost Modeling Results 3-7

Chapter 4. Technological Evaluation for Extended Aeration Plants 4-1
4.1 Base Case/Existing System 4-1
4.2 Year-Round Nutrient Removal 4-2
4.2.1 Objective A 4-3
4.2.2 Objective B 4-7

4.2.3 Objective C 4-11
4.2.4 Objective D 4-15
4.2.5 Objective E 4-19
4.2.6 Objective F 4-21
4.3 Seasonal Nutrient Removal 4-24
4.3.1 Objective A 4-24
4.3.2 Objective B 4-26
4.3.3 Objective C 4-28
4.3.4 Objective D 4-30
4.3.5 Objective D 4-32
4.3.6 Objective F 4-34

Chapter 5. Technological Evaluation for Conventional Activated Sludge Plants 5-1
5.1 Base Case/Existing System 5-1
5.2 Year-Round Nutrient Removal 5-1
5.2.1 Objective A 5-2
5.2.2 Objective B 5-5
5.2.3 Objective C 5-8
5.2.4 Objective D 5-10
5.2.5 Objective E 5-12
5.2.6 Objective F 5-14
5.3 Seasonal Nutrient Removal 5-17
5.3.1 Objective A 5-17
5.3.2 Objective B 5-19
5.3.3 Objective C 5-21
5.3.4 Objective D 5-23
5.3.5 Objective E 5-24
5.3.6 Objective F 5-26

Chapter 6. Technological Evaluation for Sequencing Batch Reactor Plants 6-1
6.1 Base Case/Existing System 6-1
6.2 Year-Round Nutrient Removal 6-2
6.2.1 Objective A 6-2
6.2.2 Objective B 6-4
6.2.3 Objective C 6-6
6.2.4 Objective D 6-8
6.2.5 Objective E 6-9
6.2.6 Objective F 6-11
6.3 Seasonal Nutrient Removal 6-12
6.3.1 Objective A 6-13
6.3.2 Objective B 6-14
6.3.3 Objective C 6-15
6.3.4 Objective D 6-16
6.3.5 Objective E 6-17
6.3.6 Objective F 6-19

Chapter 7. Technological Evaluation for Trickling Filter, Trickling Filter/Solids Contact
and rotating Biological Contactor Plants 7-1
7.1 Base Case/Existing System 7-1
7.2 Year-Round Nutrient Removal 7-1
7.2.1 Objective A 7-2
7.2.2 Objective B 7-4

7.2.3 Objective C 7-5
7.2.4 Objective D 7-7
7.2.5 Objective E 7-8
7.2.6 Objective F 7-10
7.3 Seasonal Nutrient Removal 7-12
7.3.1 Objective A 7-12
7.3.2 Objective B 7-14
7.3.3 Objective C 7-15
7.3.4 Objective D 7-17
7.3.5 Objective E 7-18
7.3.6 Objective F 7-20

Chapter 8. Technological Evaluation for Membrane Biological Reactor Plants 8-1
8.1 Base Case/Existing System 8-1
8.2 Year-Round Nutrient Removal 8-2
8.2.1 Objective A 8-2
8.2.2 Objective B 8-3
8.2.3 Objective C 8-5
8.2.4 Objective D 8-7
8.2.5 Objective E 8-8
8.2.6 Objective F 8-9
8.3 Seasonal Nutrient Removal 8-10
8.3.1 Objective A 8-10
8.3.2 Objective B 8-10
8.3.3 Objective C 8-11
8.3.4 Objective D 8-12
8.3.5 Objective E 8-14
8.3.6 Objective F 8-14

Chapter 9. Technological Evaluation for High-Purity Oxygen Activated Sludge Plants ... 9-1
9.1 Base Case/Existing System 9-1
9.2 Year-Round Nutrient Removal 9-3
9.2.1 Objective A 9-3
9.2.2 Objective B 9-5
9.3 Seasonal Nutrient Removal 9-7
9.3.1 Objective A 9-7
9.3.2 Objective B 9-9

Chapter 10. Technological Evaluation for Aerated or Facultative Lagoon Plants 10-1
10.1 Base Case/Existing System 10-1
10.2 Year-Round Nutrient Removal 10-1
10.2.1 Objective A 10-2
10.2.2 Objective B 10-4
10.2.3 Objective C 10-7
10.2.4 Objective D 10-9
10.2.5 Objective E 10-11
10.2.6 Objective F 10-14
10.3 Seasonal Nutrient Removal 10-16
10.3.1 Objective A 10-16
10.3.2 Objective B 10-18
10.3.3 Objective C 10-20
10.3.4 Objective D 10-21

10.3.5 Objective E 10-23
10.3.6 Objective F 10-24

Chapter 11. Cost Evaluation, Objective A 11-1
11.1 Year-Round Nutrient Removal 11-1
11.1.1 Extended Aeration Plants 11-1
11.1.2 Conventional Activated Sludge Plants 11-5
11.1.3 Sequencing Batch Reactor Plants 11-7
11.1.4 Trickling Filter, Trickling Filter/Solids Contact and Rotating Biological Contactor Plants 11-9
11.1.5 Membrane Biological Reactor Plants 11-14
11.1.6 High-Purity Oxygen Activated Sludge Plants 11-14
11.1.7 Aerated or Facultative Lagoon Plants 11-16
11.2 Seasonal Nutrient Removal 11-20
11.2.1 Extended Aeration Plants 11-20
11.2.2 Conventional Activated Sludge Plants 11-24
11.2.3 Sequencing Batch Reactor Plants 11-26
11.2.4 Trickling Filter, Trickling Filter/Solids Contact and Rotating Biological Contactor Plants 11-28
11.2.5 Membrane Biological Reactor Plants 11-33
11.2.6 High-Purity Oxygen Activated Sludge Plants 11-33
11.2.7 Aerated or Facultative Lagoon Plants 11-35

Chapter 12. Cost Evaluation, Objective B 12-1
12.1 Year-Round Nutrient Removal 12-1
12.1.1 Extended Aeration Plants 12-1
12.1.2 Conventional Activated Sludge Plants 12-5
12.1.3 Sequencing Batch Reactor Plants 12-7
12.1.4 Trickling Filter, Trickling Filter/Solids Contact and Rotating Biological Contactor Plants 12-9
12.1.5 Membrane Biological Reactor Plants 12-14
12.1.6 High-Purity Oxygen Activated Sludge Plants 12-16
12.1.7 Aerated or Facultative Lagoon Plants 12-18
12.2 Seasonal Nutrient Removal 12-22
12.2.1 Extended Aeration Plants 12-22
12.2.2 Conventional Activated Sludge Plants 12-26
12.2.3 Sequencing Batch Reactor Plants 12-28
12.2.4 Trickling Filter, Trickling Filter/Solids Contact and Rotating Biological Contactor Plants 12-30
12.2.5 Membrane Biological Reactor Plants 12-35
12.2.6 High-Purity Oxygen Activated Sludge Plants 12-37
12.2.7 Aerated or Facultative Lagoon Plants 12-39

Chapter 13. Cost Evaluation, Objective C 13-1
13.1 Year-Round Nutrient Removal 13-1
13.1.1 Extended Aeration Plants 13-1
13.1.2 Conventional Activated Sludge Plants 13-5
13.1.3 Sequencing Batch Reactor Plants 13-7
13.1.4 Trickling Filter, Trickling Filter/Solids Contact and Rotating Biological Contactor Plants 13-9
13.1.5 Membrane Biological Reactor Plants 13-14
13.1.6 High-Purity Oxygen Activated Sludge Plants 13-15

13.1.7 Aerated or Facultative Lagoon Plants 13-16
13.2 Seasonal Nutrient Removal 13-20
13.2.1 Extended Aeration Plants 13-20
13.2.2 Conventional Activated Sludge Plants 13-24
13.2.3 Sequencing Batch Reactor Plants 13-26
13.2.4 Trickling Filter, Trickling Filter/Solids Contact and Rotating Biological Contactor Plants 13-28
13.2.5 Membrane Biological Reactor Plants 13-33
13.2.6 High-Purity Oxygen Activated Sludge Plants 13-34
13.2.7 Aerated or Facultative Lagoon Plants 13-35

Chapter 14. Cost Evaluation, Objective D 14-1
14.1 Year-Round Nutrient Removal 14-1
14.1.1 Extended Aeration Plants 14-1
14.1.2 Conventional Activated Sludge Plants 14-5
14.1.3 Sequencing Batch Reactor Plants 14-7
14.1.4 Trickling Filter, Trickling Filter/Solids Contact and Rotating Biological Contactor Plants 14-9
14.1.5 Membrane Biological Reactor Plants 14-14
14.1.6 High-Purity Oxygen Activated Sludge Plants 14-15
14.1.7 Aerated or Facultative Lagoon Plants 14-16
14.2 Seasonal Nutrient Removal 14-20
14.2.1 Extended Aeration Plants 14-20
14.2.2 Conventional Activated Sludge Plants 14-24
14.2.3 Sequencing Batch Reactor Plants 14-26
14.2.4 Trickling Filter, Trickling Filter/Solids Contact and Rotating Biological Contactor Plants 14-28
14.2.5 Membrane Biological Reactor Plants 14-33
14.2.6 High-Purity Oxygen Activated Sludge Plants 14-34
14.2.7 Aerated or Facultative Lagoon Plants 14-35

Chapter 15. Cost Evaluation, Objective E 15-1
15.1 Year-Round Nutrient Removal 15-1
15.1.1 Extended Aeration Plants 15-1
15.1.2 Conventional Activated Sludge Plants 15-5
15.1.3 Sequencing Batch Reactor Plants 15-7
15.1.4 Trickling Filter, Trickling Filter/Solids Contact and Rotating Biological Contactor Plants 15-9
15.1.5 Membrane Biological Reactor Plants 15-15
15.1.6 High-Purity Oxygen Activated Sludge Plants 15-17
15.1.7 Aerated or Facultative Lagoon Plants 15-17
15.2 Seasonal Nutrient Removal 15-21
15.2.1 Extended Aeration Plants 15-21
15.2.2 Conventional Activated Sludge Plants 15-25
15.2.3 Sequencing Batch Reactor Plants 15-27
15.2.4 Trickling Filter, Trickling Filter/Solids Contact and Rotating Biological Contactor Plants 15-29
15.2.5 Membrane Biological Reactor Plants 15-35
15.2.6 High-Purity Oxygen Activated Sludge Plants 15-37
15.2.7 Aerated or Facultative Lagoon Plants 15-37

Chapter 16. Cost Evaluation, Objective F 16-1
16.1 Year-Round Nutrient Removal 16-1
167.1.1 Extended Aeration Plants 16-1
16.1.2 Conventional Activated Sludge Plants 16-5
16.1.3 Sequencing Batch Reactor Plants 16-7
16.1.4 Trickling Filter, Trickling Filter/Solids Contact and Rotating Biological Contactor Plants 16-9
16.1.5 Membrane Biological Reactor Plants 16-15
16.1.6 High-Purity Oxygen Activated Sludge Plants 16-17
16.1.7 Aerated or Facultative Lagoon Plants 16-17
16.2 Seasonal Nutrient Removal 16-21
16.2.1 Extended Aeration Plants 16-21
16.2.2 Conventional Activated Sludge Plants 16-25
16.2.3 Sequencing Batch Reactor Plants 16-27
16.2.4 Trickling Filter, Trickling Filter/Solids Contact and Rotating Biological Contactor Plants 16-29
16.2.5 Membrane Biological Reactor Plants 16-35
16.2.6 High-Purity Oxygen Activated Sludge Plants 16-37
16.2.7 Aerated or Facultative Lagoon Plants 16-37

Chapter 17. Cumulative Cost Impact Summary 17-1
17.1 Cumulative Statewide Cost 17-1
17.2 Potential Sewer Rate Impacts 17-1
17.3 Watershed-Wide Costs for Nutrient Removal 17-1

Chapter 18. Treatment Requirements and Costs for Reclaimed Wastewater 18-1
18.1 Applicable Standards 18-1
18.2 Evaluation Approach 18-2
18.2.1 Technology Assumptions 18-2
18.2.2 Cost Approach 18-3
18.3 Year-Round Reclaimed Water Upgrade Cost Estimates 18-3
18.3.1 Non-Membrane Plants 18-3
18.3.2 Membrane Plants 18-3
18.3.3 Extended Aeration Plants 18-9
18.3.4 Conventional Activated Sludge Plants 18-11
18.3.5 Sequencing Batch Reactors 18-11
18.3.6 Trickling Filter, Trickling Filter/Solids Contact and Rotating Biological Contactor Plants 18-12
18.3.7 Membrane Biological Reactor Plants 18-14
18.3.8 High-Purity Oxygen Activated Sludge Plants 18-14
18.3.9 Lagoon Plants 18-15
18.4 Seasonal Reclaimed Water Upgrade Cost Estimates 18-16
18.41 Non-Membrane Plants 18-16
18.4.2 Membrane Plants 18-16
18.4.3 Extended Aeration Plants 18-22
18.4.4 Conventional Activated Sludge Plants 18-24
18.4.5 Sequencing Batch Reactors 18-24
18.4.6 Trickling Filter, Trickling Filter/Solids Contact and Rotating Biological Contactor Plants 18-25
18.4.7 Membrane Biological Reactor Plants 18-27
18.4.8 High-Purity Oxygen Activated Sludge Plants 18-27
18.4.9 Lagoon Plants 18-28

Abbreviations

References

LIST OF TABLES

No. Title *Page No.*

ES-1 Treatment Process Upgrades Evaluated to Achieve Nutrient-Removal Objectives ES-3
ES-2 Estimated Annual Capital and O&M Costs for Nutrient Removal Upgrades of all Treatment Plants in Washington ES-7
ES-3 Estimated Monthly Household Sewer Rate Increase for Nutrient Removal Upgrades of all Treatment Plants in Washington ES-8
ES-4 Estimated Capital and O&M Costs by WRIA for Year-Round Nutrient Removal ES-10
ES-5 Estimated Capital and O&M Costs by WRIA for Dry-Season Nutrient Removal ES-12
ES-6 Reclaimed-Water Upgrade Cost Relative to Objective A Nutrient Removal Upgrade Cost.....ES-13

1-1 Project Work Plan and Report Organization..... 1-4

2-1 Number of Plants by Secondary Treatment Process Category and Maximum-Month Rated Plant Capacity 2-2
2-2 Collective Capacity of Plants by Secondary Treatment Process Category and Maximum-Month Rated Plant Capacity 2-2
2-3 Design Criteria for Influent Flows and Loads..... 2-7

3-1 Treatment Process Upgrades Evaluated to Achieve Nutrient-Removal Objectives 3-2
3-2 Design Criteria Flows and Loads for 1-MGD Hypothetical Model..... 3-4
3-3 Maximum-Month Treatment Plant Capacities Evaluated for Cost Curves..... 3-5
3-4 Unit Costs and Rates 3-6

4-1 Base Case/Existing System for Extended Aeration Plant 4-2
4-2 Extended Aeration Plant Biowin Results for Year-Round Nutrient Removal.....*follows page 4-36*
4-3 Nutrient Recycling Comparison for Extended Aeration Systems, Objective A Year-Round Nutrient Removal..... 4-4
4-4 Additional Energy Consumption for Upgrading MA Plant to Achieve Objective A Year-Round 4-5
4-5 Additional Energy Consumption for Upgrading DA Plant to Achieve Objective A Year-Round 4-5
4-6 Additional Footprint Requirements for Upgrading Extended Aeration Plants to Achieve Objective A 4-6
4-7 Methanol Dosage Calculation 4-8
4-8 Nutrient Recycling Comparison for Extended Aeration Systems, Objective B Year-Round Nutrient Removal 4-8
4-9 Additional Energy Consumption for Upgrading MA Plant to Achieve Objective B Year-Round 4-9
4-10 Additional Energy Consumption for Upgrading DA Plant to Achieve Objective B Year-Round4-10
4-11 Additional Footprint Requirements for Upgrading Extended Aeration Plants to Achieve Objective B 4-10
4-12 Alum to Phosphorus Ratio for Phosphorus Reduction..... 4-12
4-13 Required Alum Dosage for Objective C Phosphorus Reduction 4-13
4-14 Nutrient Recycling Comparison for Extended Aeration Systems, Objective C Year-Round Nutrient Removal..... 4-13
4-15 Additional Energy Consumption for Upgrading MA Plant to Achieve Objective C Year-Round..... 4-14
4-16 Additional Energy Consumption for Upgrading DA Plant to Achieve Objective C Year-Round..... 4-14
4-17 Additional Footprint Requirements for Upgrading Extended Aeration Plants to Achieve Objective C 4-15

4-18 Required Alum Dosage for Objective D Phosphorus Reduction 4-16
4-19 Nutrient Recycling Comparison for Extended Aeration Systems, Objective D Year-Round Nutrient Removal 4-17
4-20 Additional Energy Consumption for Upgrading MA Plant to Achieve Objective D Year-Round 4-17
4-21 Additional Energy Consumption for Upgrading DA Plant to Achieve Objective D Year-Round 4-18
4-22 Additional Footprint Requirements for Upgrading Extended Aeration Plants to Achieve Objective D 4-19
4-23 Nutrient Recycling Comparison for Extended Aeration Systems, Objective E Year-Round Nutrient Removal 4-19
4-24 Additional Energy Consumption for Upgrading MA Plant to Achieve Objective E Year-Round 4-20
4-25 Additional Energy Consumption for Upgrading DA Plant to Achieve Objective E Year-Round 4-21
4-26 Additional Footprint Requirements for Upgrading Extended Aeration Plants to Achieve Objective E 4-21
4-27 Nutrient Recycling Comparison for Extended Aeration Systems, Objective F Year-Round Nutrient Removal 4-22
4-28 Additional Energy Consumption for Upgrading MA Plant to Achieve Objective F Year-Round 4-23
4-29 Additional Energy Consumption for Upgrading DA Plant to Achieve Objective F Year-Round 4-23
4-30 Additional Footprint Requirements for Upgrading Extended Aeration plants to Achieve Objective F 4-24
4-31 Extended Aeration Plant Biowin Results for Seasonal Nutrient Removal .....*follows page 4-36*
4-32 Nutrient Recycling Comparison for Extended Aeration Systems Objective A Seasonal Nutrient Removal 4-25
4-33 Additional Energy Consumption for Upgrading MA Plant to Achieve Objective A Seasonally 4-25
4-34 Additional Energy Consumption for Upgrading DA Plant to Achieve Objective A Seasonally . 4-26
4-35 Nutrient Recycling Comparison for Extended Aeration Systems, Objective B Seasonal Nutrient Removal 4-27
4-36 Additional Energy Consumption for Upgrading MA Plant to Achieve Objective B Seasonally 4-27
4-37 Additional Energy Consumption for Upgrading DA Plant to Achieve Objective B Seasonally . 4-28
4-38 Nutrient Recycling Comparison for Extended Aeration Systems, Objective C Seasonal Nutrient Removal 4-29
4-39 Additional Energy Consumption for Upgrading MA Plant to Achieve Objective C Seasonally 4-29
4-40 Additional Energy Consumption for Upgrading DA Plant to Achieve Objective C Seasonally . 4-30
4-41 Nutrient Recycling Comparison for Extended Aeration Systems, Objective D Seasonal Nutrient Removal 4-30
4-42 Additional Energy Consumption for Upgrading MA Plant to Achieve Objective D Seasonally 4-31
4-43 Additional Energy Consumption for Upgrading DA Plant to Achieve Objective D Seasonally . 4-32
4-44 Nutrient Recycling Comparison for Extended Aeration Systems, Objective D Seasonal Nutrient Removal 4-32
4-45 Additional Energy Consumption for Upgrading MA Plant to Achieve Objective E Seasonally . 4-33
4-46 Additional Energy Consumption for Upgrading DA Plant to Achieve Objective E Seasonally . 4-33
4-44 Nutrient Recycling Comparison for Extended Aeration Systems, Objective F Seasonal Nutrient Removal 4-34
4-45 Additional Energy Consumption for Upgrading MA Plant to Achieve Objective F Seasonally . 4-35
4-46 Additional Energy Consumption for Upgrading DA Plant to Achieve Objective F Seasonally .. 4-35

5-1 Base Case/Existing System for Conventional Activated Sludge Plant 5-2
5-2 Conventional Activated Sludge Plant Biowin Results for Year-Round Nutrient Removal .....*follows page 5-28*
5-3 Nutrient Recycling Comparison for Conventional Activated Sludge Systems Objective A Year-Round Nutrient Removal 5-4
5-4 Additional Energy Consumption for Upgrading CAS Plant to Achieve Objective A Year-Round 5-4
5-5 Additional Footprint Required for Upgrading Conventional Activated Sludge Plants to Achieve Objective A Year-Round 5-5
5-6 Nutrient Recycling Comparison for Conventional Activated Sludge Systems Objective B Year-Round Nutrient Removal 5-6
5-7 Additional Energy Consumption for Upgrading CAS Plant to Achieve Objective B Year-Round 5-7
5-8 Additional Footprint Required for Upgrading Conventional Activated Sludge Plants to Achieve Objective B Year-Round 5-8
5-9 Nutrient Recycling Comparison for Conventional Activated Sludge Systems Objective C Year-Round Nutrient Removal 5-9
5-10 Additional Energy Consumption for Upgrading CAS Plant to Achieve Objective C Year-Round 5-10
5-11 Additional Footprint Required for Upgrading Conventional Activated Sludge Plants to Achieve Objective C Year-Round 5-10
5-12 Nutrient Recycling Comparison for Conventional Activated Sludge Systems Objective D Year-Round Nutrient Removal 5-11
5-13 Additional Energy Consumption for Upgrading CAS Plant to Achieve Objective D Year-Round 5-12
5-14 Additional Footprint Required for Upgrading Conventional Activated Sludge Plants to Achieve Objective D Year-Round 5-12
5-15 Nutrient Recycling Comparison for Conventional Activated Sludge Systems Objective E Year-Round Nutrient Removal 5-13
5-16 Additional Energy Consumption for Upgrading CAS Plant to Achieve Objective E Year-Round 5-14
5-17 Additional Footprint Required for Upgrading Conventional Activated Sludge Plants to Achieve Objective E Year-Round 5-14
5-18 Nutrient Recycling Comparison for Conventional Activated Sludge Systems Objective F Year-Round Nutrient Removal 5-15
5-19 Additional Energy Consumption for Upgrading CAS Plant to Achieve Objective F Year-Round 5-16
5-20 Additional Footprint Required for Upgrading Conventional Activated Sludge Plants to Achieve Objective F Year-Round 5-16
5-21 Conventional Activated Sludge Plant Biowin Results for Seasonal Nutrient Removals .....*follows page5- 30*
5-22 Nutrient Recycling Comparison for Conventional Activated Sludge Systems, Objective A Seasonal Nutrient Removal 5-18
5-23 Additional Energy Consumption for Upgrading CAS Plant to Achieve Objective A Seasonally 5-18
5-24 Additional Footprint Required for Upgrading Conventional Activated Sludge Plants to Achieve Objective A Seasonally 5-19
5-25 Nutrient Recycling Comparison for Conventional Activated Sludge Systems, Objective A Seasonal Nutrient Removal 5-20
5-26 Additional Energy Consumption for Upgrading CAS Plant to Achieve Objective B Seasonally 5-21
5-27 Additional Footprint Required for Upgrading Conventional Activated Sludge Plants to Achieve Objective B Seasonally 5-21

5-28 Nutrient Recycling Comparison for Conventional Activated Sludge Systems, Objective C Seasonal Nutrient Removal 5-22
5-29 Additional Energy Consumption for Upgrading CAS Plant to Achieve Objective C Seasonally 5-22
5-30 Nutrient Recycling Comparison for Conventional Activated Sludge Systems, Objective D Seasonal Nutrient Removal 5-23
5-31 Additional Energy Consumption for Upgrading CAS Plant to Achieve Objective D Seasonally 5-24
5-32 Additional Footprint Required for Upgrading Conventional Activated Sludge Plants to Achieve Objective D Seasonally 5-24
5-33 Nutrient Recycling Comparison for Conventional Activated Sludge Systems, Objective E Seasonal Nutrient Removal 5-25
5-34 Additional Energy Consumption for Upgrading CAS Plant to Achieve Objective E Seasonally 5-25
5-35 Additional Footprint Required for Upgrading Conventional Activated Sludge Plants to Achieve Objective E Seasonally 5-26
5-36 Nutrient Recycling Comparison for Conventional Activated Sludge Systems, Objective F Seasonal Nutrient Removal 5-27
5-37 Additional Energy Consumption for Upgrading CAS Plant to Achieve Objective F Seasonally 5-27
5-38 Additional Footprint Required for Upgrading Conventional Activated Sludge Plants to Achieve Objective F Seasonally 5-28

6-1 Base Case/Existing System for Sequencing Batch Reactor Plant 6-2
6-2 Sequencing Batch Reactor Plant Biowin Results for Year-Round Nutrient Removal ..... *follows page 6-20*
6-3 Additional Energy Consumption for Upgrading SBR Plant to Achieve Objective A Year-Round 6-3
6-4 Additional Footprint Required for Upgrading SBR Plants to Achieve Objective A Year-Round 6-4
6-5 Additional Energy Consumption for Upgrading SBR Plant to Achieve Objective B Year-Round 6-6
6-6 Additional Footprint Required for Upgrading SBR Plants to Achieve Objective B Year-Round 6-6
6-7 Additional Energy Consumption for Upgrading SBR Plant to Achieve Objective C Year-Round 6-7
6-8 Additional Footprint Required for Upgrading SBR Plants to Achieve Objective C Year-Round 6-8
6-9 Additional Energy Consumption for Upgrading SBR Plant to Achieve Objective D Year-Round 6-9
6-10 Additional Footprint Required for Upgrading SBR Plants to Achieve Objective D Year-Round 6-9
6-11 Additional Energy Consumption for Upgrading SBR Plant to Achieve Objective E Year-Round 6-10
6-12 Additional Footprint Required for Upgrading SBR Plants to Achieve Objective E Year-Round 6-11
6-13 Additional Energy Consumption for Upgrading SBR Plant to Achieve Objective F Year-Round 6-12
6-14 Additional Footprint Required for Upgrading SBR Plants to Achieve Objective F Year-Round 6-12
6-15 Sequencing Batch Reactors Biowin Results for Seasonal Nutrient Removal ..... *follows page 6-22*
6-16 Additional Energy Consumption for Upgrading SBR Plant to Achieve Objective A Seasonally 6-13
6-17 Additional Energy Consumption for Upgrading SBR Plant to Achieve Objective B Seasonally 6-14
6-18 Additional Footprint Required for Upgrading SBR Plants to Achieve Objective B Seasonally . 6-15

6-19 Additional Energy Consumption for Upgrading SBR Plant to Achieve Objective C Seasonally 6-16
6-20 Additional Energy Consumption for Upgrading SBR Plant to Achieve Objective D Seasonally 6-17
6-21 Additional Footprint Required for Upgrading SBR Plants to Achieve Objective D Seasonally . 6-17
6-22 Additional Energy Consumption for Upgrading SBR Plant to Achieve Objective E Seasonally 6-18
6-23 Additional Footprint Required for Upgrading SBR Plants to Achieve Objective E Seasonally.. 6-19
6-24 Additional Energy Consumption for Upgrading SBR Plant to Achieve Objective F Seasonally 6-20
6-25 Additional Process Footprint Area Required for Upgrading SBR Plants to Achieve Objective F Seasonally 6-20

7-1 Footprint Comparison for Existing Trickling Filter, Rotating Biological Contactor, and Trickling Filter/Solids Contact Systems 7-2
7-2 Additional Energy Consumption for Upgrading TF Plant to Achieve Objective A Year-Round 7-3
7-3 Additional Energy Consumption for Upgrading RBC Plant to Achieve Objective A Year-Round 7-3
7-4 Additional Energy Consumption for Upgrading TF/SC Plant to Achieve Objective A Year-Round 7-3
7-5 Additional Footprint Requirements for Upgrading TF, RBC and TF/SC Plants to Achieve Objective A Year-Round 7-3
7-6 Additional Energy Consumption for Upgrading TF Plant to Achieve Objective B Year-Round 7-4
7-7 Additional Energy Consumption for Upgrading RBC Plant to Achieve Objective B Year-Round 7-5
7-8 Additional Energy Consumption for Upgrading TF/SC Plant to Achieve Objective B Year-Round 7-5
7-9 Additional Footprint Requirements for Upgrading TF, RBC and TF/SC Plants to Achieve Objective B Year-Round 7-5
7-10 Additional Energy Consumption for Upgrading TF Plant to Achieve Objective C Year-Round 7-6
7-11 Additional Energy Consumption for Upgrading RBC Plant to Achieve Objective C Year-Round 7-6
7-12 Additional Energy Consumption for Upgrading TF/SC Plant to Achieve Objective C Year-Round 7-6
7-13 Additional Energy Consumption for Upgrading TF Plant to Achieve Objective D Year-Round 7-7
7-14 Additional Energy Consumption for Upgrading RBC Plant to Achieve Objective D Year-Round 7-8
7-15 Additional Energy Consumption for Upgrading TF/SC Plant to Achieve Objective D Year-Round 7-8
7-16 Additional Energy Consumption for Upgrading TF Plant to Achieve Objective E Year-Round 7-9
7-17 Additional Energy Consumption for Upgrading RBC Plant to Achieve Objective E Year-Round 7-9
7-18 Additional Energy Consumption for Upgrading TF/SC Plant to Achieve Objective E Year-Round 7-9
7-19 Additional Footprint Requirements for Upgrading TF, RBC and TF/SC Plants to Achieve Objective E Year-Round 7-10
7-20 Additional Energy Consumption for Upgrading TF Plant to Achieve Objective F Year-Round 7-11
7-21 Additional Energy Consumption for Upgrading RBC Plant to Achieve Objective F Year-Round 7-11

7-22 Additional Energy Consumption for Upgrading TF/SC Plant to Achieve Objective F Year-Round 7-11
7-23 Additional Footprint Requirements for Upgrading TF, RBC and TF/SC Plants to Achieve Objective F Year-Round 7-12
7-24 Additional Energy Consumption for Upgrading TF Plant to Achieve Objective A Seasonally .. 7-12
7-25 Additional Energy Consumption for Upgrading RBC Plant to Achieve Objective A Seasonally 7-13
7-26 Additional Energy Consumption for Upgrading TF/SC Plant to Achieve Objective A Seasonally 7-13
7-27 Additional Footprint Requirements for Upgrading TF, RBC and TF/SC Plants to Achieve Objective A Seasonally 7-13
7-28 Additional Energy Consumption for Upgrading TF Plant to Achieve Objective B Seasonally .. 7-14
7-29 Additional Energy Consumption for Upgrading RBC Plant to Achieve Objective B Seasonally 7-14
7-30 Additional Energy Consumption for Upgrading TF/SC Plant to Achieve Objective B Seasonally 7-15
7-31 Additional Footprint Requirements for Upgrading TF, RBC and TF/SC Plants to Achieve Objective B Seasonally 7-15
7-32 Additional Energy Consumption for Upgrading TF Plant to Achieve Objective C Seasonally .. 7-16
7-33 Additional Energy Consumption for Upgrading RBC Plant to Achieve Objective C Seasonally 7-16
7-34 Additional Energy Consumption for Upgrading TF/SC Plant to Achieve Objective C Seasonally 7-16
7-35 Additional Energy Consumption for Upgrading TF Plant to Achieve Objective D Seasonally .. 7-17
7-36 Additional Energy Consumption for Upgrading RBC Plant to Achieve Objective D Seasonally 7-18
7-37 Additional Energy Consumption for Upgrading TF/SC Plant to Achieve Objective D Seasonally 7-18
7-38 Additional Energy Consumption for Upgrading TF Plant to Achieve Objective E Seasonally .. 7-19
7-39 Additional Energy Consumption for Upgrading RBC Plant to Achieve Objective E Seasonally 7-19
7-40 Additional Energy Consumption for Upgrading TF/SC Plant to Achieve Objective E Seasonally 7-19
7-41 Additional Footprint Requirements for Upgrading TF, RBC and TF/SC Plants to Achieve Objective E Seasonally 7-20
7-42 Additional Energy Consumption for Upgrading TF Plant to Achieve Objective F Seasonally... 7-20
7-43 Additional Energy Consumption for Upgrading RBC Plant to Achieve Objective F Seasonally 7-21
7-44 Additional Energy Consumption for Upgrading TF/SC Plant to Achieve Objective F Seasonally 7-21
7-45 Additional Footprint Requirements for Upgrading TF, RBC and TF/SC Plants to Achieve Objective F Seasonally 7-21

8-1 Number of Aeration Tank Trains Based on Treatment Plant Average Annual Flow 8-2
8-2 Number of Tanks Trains Based on Peak Plant Capacity 8-2
8-3 Base Case/Existing System for MBR Plant 8-3
8-4 Membrane Bioreactor Plant Biowin Results for Year-Round Nutrient Removal...*follows page 8-16*
8-5 Additional Energy Consumption for Upgrading MBR Plant to Achieve Objective B Year-Round 8-4
8-6 Additional Footprint Required for Upgrading MBR Plants to Achieve Objective B Year-Round 8-5

8-7 Nutrient Recycling Comparison for Membrane Biological Reactor Systems, Objective C Year-Round Nutrient Removal 8-6
8-8 Additional Energy Consumption for Upgrading MBR Plant to Achieve Objective C Year-Round 8-6
8-9 Additional Footprint Required for Upgrading MBR Plants to Achieve Objective C Year-Round 8-7
8-10 Nutrient Recycling Comparison for Membrane Biological Reactors Systems, Objective D Year-Round Nutrient Removal 8-7
8-11 Additional Energy Consumption for Upgrading MBR Plant to Achieve Objective D Year-Round 8-8
8-12 Additional Footprint Required for Upgrading MBR Plants to Achieve Objective D Year-Round 8-8
8-13 Nutrient Recycling Comparison for Membrane Biological Reactors Systems, Objective F Year-Round Nutrient Removal 8-9
8-14 Additional Energy Consumption for Upgrading MBR Plant to Achieve Objective F Year-Round 8-10
8-15 Additional Footprint Required for Upgrading MBR Plants to Achieve Objective F Year-Round 8-10
8-16 Membrane Bioreactor Plant Biowin Results for Seasonal Nutrient Removal .....*follows page 8-18*
8-17 Nutrient Recycling Comparison for Membrane Biological Reactor Systems, Objective C Seasonal Nutrient Removal 8-11
8-18 Additional Energy Consumption for Upgrading MBR Plant to Achieve Objective C Seasonally 8-12
8-19 Nutrient Recycling Comparison for Membrane Biological Reactor Systems, Objective D Seasonal Nutrient Removal 8-13
8-20 Additional Energy Consumption for Upgrading MBR Plant to Achieve Objective D Seasonally 8-13
8-21 Nutrient Recycling Comparison for Membrane Biological Reactor Systems, Objective F Seasonal Nutrient Removal 8-14
8-22 Additional Energy Consumption for Upgrading MBR Plant to Achieve Objective F Seasonally 8-14

9-1 Base Case/Existing System for HPO Activated Sludge Plant 9-2
9-2 High Purity Oxygen Plants Biowin Results for Year-Round Nutrient Removal ....*follows page* 9-11
9-3 Nutrient Recycling Comparison for High-Purity Oxygen Activated Sludge Systems, Objective A Year-Round Nutrient Removal 9-4
9-4 Additional Energy Consumption for Upgrading HPO Plant to Achieve Objective A Year-Round 9-4
9-5 Additional Footprint Required for Upgrading HPO Plants to Achieve Objective A Year-Round 9-5
9-6 Nutrient Recycling Comparison for High-Purity Oxygen Activated Sludge Systems, Objective B Year-Round Nutrient Removal 9-6
9-7 Additional Energy Consumption for Upgrading HPO Plant to Achieve Objective B Year-Round 9-6
9-8 Additional Footprint Required for Upgrading HPO Plants to Achieve Objective B Year-Round 9-7
9-9 High Purity Oxygen Plants Biowin Results for Seasonal Nutrient Removal .....*follows page 9*-11
9-10 Nutrient Recycling Comparison for High-Purity Oxygen Activated Sludge Systems, Objective A Seasonal Nutrient Removal 9-8
9-11 Additional Energy Consumption for Upgrading HPO Plant to Achieve Objective A Seasonally 9-8

9-12 Additional Footprint Required for Upgrading HPO Plants to Achieve Objective A Seasonally 9-9
9-13 Nutrient Recycling Comparison for High-Purity Oxygen Activated Sludge Systems, Objective B Seasonal Nutrient Removal 9-10
9-14 Additional Energy Consumption for Upgrading HPO Plant to Achieve Objective B Seasonally 9-10
9-15 Additional Footprint Required for Upgrading HPO Plants to Achieve Objective B Seasonally 9-11

10-1 Lagoon Effluent Concentrations 10-1
10-2 Biowin Results for Aerated or Facultative Lagoons >5.0 MGD, for objectives A, B, E and F Year-Round ..... *follows page 26*
10-3 Biowin Results for Aerated or Facultative Lagoons for Objectives C and D ..... *follows page 28*
10-4 Nutrient Recycling Estimates for Lagoon Plants Upgraded to Achieve Objective A Year-Round 10-2
10-5 Additional Energy Consumption for Upgrading a 1-MGD Aerated Lagoon Plant to Achieve Objective A Year-Round 10-3
10-6 Additional Energy Consumption for Upgrading a 1-MGD Facultative Lagoon Plant to Achieve Objective A Year-Round 10-3
10-7 Additional Footprint Requirements for Upgrading Aerated Lagoon and Facultative Lagoon Plants to Achieve Objective A Year-Round 10-4
10-8 Nutrient Recycling Estimates for Lagoon Plants Upgraded to Achieve Objective B Year-Round 10-5
10-9 Additional Energy Consumption for Upgrading a 1-MGD Aerated Lagoon Plant to Achieve Objective B Year-Round 10-6
10-10 Additional Energy Consumption for Upgrading a 1-MGD Facultative Lagoon Plant to Achieve Objective B Year-Round 10-6
10-11 Additional Footprint Requirements for Upgrading Aerated Lagoon and Facultative Lagoon Plants to Achieve Objective B Year-Round 10-6
10-12 Nutrient Recycling for Aerated or Facultative Lagoon Systems, Objective C Year-Round Nutrient Removal 10-7
10-13 Additional Energy Consumption for Upgrading Aerated Lagoon Plant to Achieve Objective C Year-Round 10-8
10-14 Additional Energy Consumption for Upgrading Facultative Lagoon Plant to Achieve Objective C Year-Round 10-8
10-15 Additional Footprint Requirements for Upgrading Aerated Lagoon and Facultative Lagoon Plants to Achieve Objective C Year-Round 10-9
10-16 Nutrient Recycling for Aerated or Facultative Lagoon Systems, Objective D Year-Round Nutrient Removal 10-10
10-17 Additional Energy Consumption for Upgrading Aerated Lagoon Plant to Achieve Objective D Year-Round 10-10
10-18 Additional Energy Consumption for Upgrading Facultative Lagoon Plant to Achieve Objective D Year-Round 10-10
10-19 Additional Footprint Requirements for Upgrading Aerated Lagoon and Facultative Lagoon Plants to Achieve Objective D Year-Round 10-11
10-20 Nutrient Recycling for Aerated or Facultative Lagoon Systems, Objective E Year-Round Nutrient Removal 10-12
10-21 Additional Energy Consumption for Upgrading Aerated Lagoon Plant to Achieve Objective E Year-Round 10-12
10-22 Additional Energy Consumption for Upgrading Facultative Lagoon Plant to Achieve Objective E Year-Round 10-13

10-23 Additional Footprint Requirements for Upgrading Aerated Lagoon and Facultative Lagoon Plants to Achieve Objective E Year-Round 10-13
10-24 Nutrient Recycling for Aerated or Facultative Lagoon Systems, Objective F Year-Round Nutrient Removal 10-14
10-25 Additional Energy Consumption for Upgrading Aerated Lagoon Plant to Achieve Objective F Year-Round 10-15
10-26 Additional Energy Consumption for Upgrading Facultative Lagoon Plant to Achieve Objective F Year-Round 10-15
10-27 Additional Footprint Requirements for Upgrading Aerated Lagoon and Facultative Lagoon Plants to Achieve Objective F Year-Round 10-16
10-28 Additional Energy Consumption for Upgrading 1 MGD Aerated Lagoon Plant to Achieve Objective A Seasonally 10-17
10-29 Additional Energy Consumption for Upgrading 1 MGD Facultative Lagoon Plant to Achieve Objective A Seasonally 10-17
10-30 Additional Footprint Requirements for Upgrading Aerated Lagoon and Facultative Lagoon Plants to Achieve Objective A Seasonally 10-18
10-31 Additional Energy Consumption for Upgrading 1 MGD Aerated Lagoon Plant to Achieve Objective B Seasonally 10-19
10-32 Additional Energy Consumption for Upgrading 1 MGD Facultative Lagoon Plant to Achieve Objective B Seasonally 10-19
10-33 Additional Footprint Requirements for Upgrading Aerated Lagoon and Facultative Lagoon Plants to Achieve Objective B Seasonally 10-19
10-34 Additional Energy Consumption for Upgrading Aerated Lagoon Plant to Achieve Objective C Seasonally 10-20
10-35 Additional Energy Consumption for Upgrading Facultative Lagoon Plant to Achieve Objective C Seasonally 10-20
10-36 Additional Footprint Requirements for Upgrading Aerated Lagoon and Facultative Lagoon Plants to Achieve Objective C Seasonally 10-21
10-37 Additional Energy Consumption for Upgrading Aerated Lagoon Plant to Achieve Objective D Seasonally 10-22
10-38 Additional Energy Consumption for Upgrading Facultative Lagoon Plant to Achieve Objective D Seasonally 10-22
10-39 Additional Footprint Requirements for Upgrading Aerated Lagoon and Facultative Lagoon Plants to Achieve Objective D Seasonally 10-22
10-40 Additional Energy Consumption for Upgrading Aerated Lagoon Plant to Achieve Objective E Seasonally 10-23
10-41 Additional Energy Consumption for Upgrading Facultative Lagoon Plant to Achieve Objective E Seasonally 10-24
10-42 Additional Footprint Requirements for Upgrading Aerated Lagoon and Facultative Lagoon Plants to Achieve Objective E Seasonally 10-24
10-43 Additional Energy Consumption for Upgrading Aerated Lagoon Plant to Achieve Objective F Seasonally 10-25
10-44 Additional Energy Consumption for Upgrading Facultative Lagoon Plant to Achieve Objective F Seasonally 10-25
10-45 Additional Footprint Requirements for Upgrading Aerated Lagoon and Facultative Lagoon Plants to Achieve Objective F Seasonally 10-26

11-1 Estimated Cost per capacity for Upgrading Extended Aeration (Mechanical Aeration) Plant to Achieve Objective A Year-Round 11-1
11-2 Estimated Cost per capacity for Upgrading Extended Aeration (Diffuser Aeration) Plant to Achieve Objective A Year-Round 11-1

11-3 Estimated Cost per Weight of Nutrient Removal for Upgrading Extended Aeration (Mechanical Aeration) Plant to Achieve Objective A Year-round 11-4
11-4 Estimated Cost per Weight of Nutrient Removal for Upgrading Extended Aeration (Diffuser Aeration) Plant to Achieve Objective A Year-round 11-4
11-5 Estimated Cost per capacity for Upgrading CAS Plant to Achieve Objective A Year-Round.... 11-5
11-6 Estimated Cost per Weight of Nutrient Removal for Upgrading CAS Plant to Achieve Objective A Year-round 11-6
11-7 Estimated Cost per capacity for Upgrading SBR Plant to Achieve Objective A Year-Round.... 11-7
11-8 Estimated Cost per Weight of Nutrient Removal for Upgrading SBR Plant to Achieve Objective A Year-round 11-8
11-9 Estimated Cost per capacity for Upgrading Trickling Filter Plant to Achieve Objective A Year-Round 11-9
11-10 Estimated Cost per capacity for Upgrading Trickling Filter/Solids Contact Plant to Achieve Objective A Year-Round 11-9
11-11 Estimated Cost per capacity for Upgrading RBC Plant to Achieve Objective A Year-Round 11-9
11-12 Estimated Cost per Weight of Nutrient Removal for Upgrading Trickling Filter Plant to Achieve Objective A Year-round 11-13
11-13 Estimated Cost per Weight of Nutrient Removal for Upgrading Trickling Filter/Solids Contact Plant to Achieve Objective A Year-round 11-13
11-14 Estimated Cost per Weight of Nutrient Removal for Upgrading RBC Plant to Achieve Objective A Year-round 11-13
11-15 Estimated Cost per capacity for Upgrading HPO Plant to Achieve Objective A Year-Round 11-14
11-16 Estimated Cost per Weight of Nutrient Removal for Upgrading HPO Plant to Achieve Objective A Year-round 11-15
11-17 Estimated Cost per capacity for Upgrading Aerated Lagoon Plant to Achieve Objective A Year Round 11-16
11-18 Estimated Cost per capacity for Upgrading Facultative Lagoon Plant to Achieve Objective A Year Round 11-16
11-19 Estimated Cost per Weight of Nutrient Removal for Upgrading Aerated Lagoon Plant to Achieve Objective A Year-round 11-19
11-20 Estimated Cost per Weight of Nutrient Removal for Upgrading Facultative Lagoon Plant to Achieve Objective A Year-round 11-19
11-21 Estimated Cost per capacity for Upgrading Extended Aeration (Mechanical Aeration) Plant to Achieve Objective A Seasonally 11-20
11-22 Estimated Cost per capacity for Upgrading Extended Aeration (Diffuser Aeration) Plant to Achieve Objective A Seasonally 11-20
11-23 Estimated Cost per Weight of Nutrient Removal for Upgrading EA (Mechanical Aeration) Plant to Achieve Objective A Seasonally 11-23
11-24 Estimated Cost per Weight of Nutrient Removal for Upgrading EA (Diffuser Aeration) Plant to Achieve Objective A Seasonally 11-23
11-25 Estimated Cost per capacity for Upgrading CAS Plant to Achieve Objective A Seasonally..... 11-24
11-26 Estimated Cost per Weight of Nutrient Removal for Upgrading CAS Plant to Achieve Objective A Seasonally..... 11-25
11-27 Estimated Cost per capacity for Upgrading SBR Plant to Achieve Objective A Seasonally..... 11-26
11-28 Unit Nutrient Removal Costs for Upgrading SBR Plant to Achieve Objective A Seasonally..... 11-27

11-29 Estimated Cost per capacity for Upgrading Trickling Filter Plant to Achieve Objective A Seasonally 11-28
11-30 Estimated Cost per capacity for Upgrading Trickling Filter/Solids Contact Plant to Achieve Objective A Seasonally 11-28
11-31 Estimated Cost per capacity for Upgrading RBC Plant to Achieve Objective A Seasonally 11-28
11-32 Estimated Cost per Weight of Nutrient Removal for Upgrading TF Plant to Achieve Objective A Seasonally 11-32
11-33 Estimated Cost per Weight of Nutrient Removal for Upgrading TF/SC Plant to Achieve Objective A Seasonally 11-32
11-34 Estimated Cost per Weight of Nutrient Removal for Upgrading RBC Plant to Achieve Objective A Seasonally 11-32
11-35 Estimated Cost per capacity for Upgrading HPO Plant to Achieve Objective A Seasonally 11-33
11-36 Estimated Cost per Weight of Nutrient Removal for Upgrading HPO Plant to Achieve Objective A Seasonally 11-34
11-37 Estimated Cost per capacity for Upgrading Aerated Lagoon Plant to Achieve Objective A Seasonally 11-35
11-38 Estimated Cost per capacity for Upgrading Facultative Lagoon Plant to Achieve Objective A Seasonally 11-35
11-39 Estimated Cost per Weight of Nutrient Removal for Upgrading Aerated Lagoon Plant to Achieve Objective A Seasonally 11-38
11-40 Estimated Cost per Weight of Nutrient Removal for Upgrading Facultative Lagoon Plant to Achieve Objective A Seasonally 11-38

12-1 Estimated Cost per capacity for Upgrading Extended Aeration (Mechanical Aeration) Plant to Achieve Objective B Year-Round 12-1
12-2 Estimated Cost per capacity for Upgrading Extended Aeration (Diffuser Aeration) Plant to Achieve Objective B Year-Round 12-1
12-3 Estimated Cost per Weight of Nutrient Removal for Upgrading Extended Aeration (Mechanical Aeration) Plant to Achieve Objective B Year-round 12-4
12-4 Estimated Cost per Weight of Nutrient Removal for Upgrading Extended Aeration (Diffuser Aeration) Plant to Achieve Objective B Year-round 12-4
12-5 Estimated Cost per capacity for Upgrading CAS Plant to Achieve Objective B Year-Round 12-5
12-6 Estimated Cost per Weight of Nutrient Removal for Upgrading CAS Plant to Achieve Objective B Year-round 12-6
12-7 Estimated Cost per capacity for Upgrading SBR Plant to Achieve Objective B Year-Round 12-7
12-8 Estimated Cost per Weight of Nutrient Removal for Upgrading SBR Plant to Achieve Objective B Year-round 12-8
12-9 Estimated Cost per capacity for Upgrading Trickling Filter Plant to Achieve Objective B Year-Round 12-9
12-10 Estimated Cost per capacity for Upgrading Trickling Filter/Solids Contact Plant to Achieve Objective B Year-Round 12-9
12-11 Estimated Cost per capacity for Upgrading RBC Plant to Achieve Objective B Year-Round 12-9
12-12 Estimated Cost per Weight of Nutrient Removal for Upgrading Trickling Filter Plant to Achieve Objective B Year-round 12-13
12-13 Estimated Cost per Weight of Nutrient Removal for Upgrading Trickling Filter/Solids Contact Plant to Achieve Objective B Year-round 12-13

12-14 Estimated Cost per Weight of Nutrient Removal for Upgrading RBC Plant to Achieve Objective B Year-round 12-13
12-15 Estimated Cost per capacity for Upgrading MBR Plant to Achieve Objective B Year-Round 12-14
12-16 Estimated Cost per Weight of Nutrient Removal for Upgrading MBR Plant to Achieve Objective B Year-round 12-15
12-17 Estimated Cost per capacity for Upgrading HPO Plant to Achieve Objective B Year-Round 12-16
12-18 Estimated Cost per Weight of Nutrient Removal for Upgrading HPO Plant to Achieve Objective B Year-round 12-17
12-19 Estimated Cost per capacity for Upgrading Aerated Lagoon Plant to Achieve Objective B Year Round 12-18
12-20 Estimated Cost per capacity for Upgrading Facultative Lagoon Plant to Achieve Objective B Year Round 12-18
12-21 Estimated Cost per Weight of Nutrient Removal for Upgrading Aerated Lagoon Plant to Achieve Objective B Year-round 12-21
12-22 Estimated Cost per Weight of Nutrient Removal for Upgrading Facultative Lagoon Plant to Achieve Objective B Year-round 12-21
12-23 Estimated Cost per capacity for Upgrading Extended Aeration (Mechanical Aeration) Plant to Achieve Objective B Seasonally 12-22
12-24 Estimated Cost per capacity for Upgrading Extended Aeration (Diffuser Aeration) Plant to Achieve Objective B Seasonally 12-22
12-25 Estimated Cost per Weight of Nutrient Removal for Upgrading EA (Mechanical Aeration) Plant to Achieve Objective B Seasonally 12-25
12-26 Estimated Cost per Weight of Nutrient Removal for Upgrading EA (Diffuser Aeration) Plant to Achieve Objective B Seasonally 12-25
12-27 Estimated Cost per capacity for Upgrading CAS Plant to Achieve Objective B Seasonally 12-26
12-28 Estimated Cost per Weight of Nutrient Removal for Upgrading CAS Plant to Achieve Objective B Seasonally 12-27
12-29 Estimated Cost per capacity for Upgrading SBR Plant to Achieve Objective B Seasonally 12-28
12-30 Unit Nutrient Removal Costs for Upgrading SBR Plant to Achieve Objective B Seasonally 12-29
12-31 Estimated Cost per capacity for Upgrading Trickling Filter Plant to Achieve Objective B Seasonally 12-30
12-32 Estimated Cost per capacity for Upgrading Trickling Filter/Solids Contact Plant to Achieve Objective B Seasonally 12-30
12-33 Estimated Cost per capacity for Upgrading RBC Plant to Achieve Objective B Seasonally 12-30
12-34 Estimated Cost per Weight of Nutrient Removal for Upgrading TF Plant to Achieve Objective B Seasonally 12-34
12-35 Estimated Cost per Weight of Nutrient Removal for Upgrading TF/SC Plant to Achieve Objective B Seasonally 12-34
12-36 Estimated Cost per Weight of Nutrient Removal for Upgrading RBC Plant to Achieve Objective B Seasonally 12-34
12-37 Estimated Cost per capacity for Upgrading MBR Plant to Achieve Objective B Seasonally 12-35
12-38 Estimated Cost per Weight of Nutrient Removal for Upgrading MBR Plant to Achieve Objective B Seasonally 12-36

12-39 Estimated Cost per capacity for Upgrading HPO Plant to Achieve Objective B Seasonally 12-37
12-40 Estimated Cost per Weight of Nutrient Removal for Upgrading HPO Plant to Achieve Objective B Seasonally 12-38
12-41 Estimated Cost per capacity for Upgrading Aerated Lagoon Plant to Achieve Objective B Seasonally 12-39
12-42 Estimated Cost per capacity for Upgrading Facultative Lagoon Plant to Achieve Objective B Seasonally 12-39
12-43 Estimated Cost per Weight of Nutrient Removal for Upgrading Aerated Lagoon Plant to Achieve Objective B Seasonally 12-42
12-44 Estimated Cost per Weight of Nutrient Removal for Upgrading Facultative Lagoon Plant to Achieve Objective B Seasonally 12-42

13-1 Estimated Cost per capacity for Upgrading Extended Aeration (Mechanical Aeration) Plant to Achieve Objective C Year-Round 13-1
13-2 Estimated Cost per capacity for Upgrading Extended Aeration (Diffuser Aeration) Plant to Achieve Objective C Year-Round 13-1
13-3 Estimated Cost per Weight of Nutrient Removal for Upgrading Extended Aeration (Mechanical Aeration) Plant to Achieve Objective C Year-round 13-4
13-4 Estimated Cost per Weight of Nutrient Removal for Upgrading Extended Aeration (Diffuser Aeration) Plant to Achieve Objective C Year-round 13-4
13-5 Estimated Cost per capacity for Upgrading CAS Plant to Achieve Objective C Year-Round 13-5
13-6 Estimated Cost per Weight of Nutrient Removal for Upgrading CAS Plant to Achieve Objective C Year-round 13-6
13-7 Estimated Cost per capacity for Upgrading SBR Plant to Achieve Objective C Year-Round 13-7
13-8 Estimated Cost per Weight of Nutrient Removal for Upgrading SBR Plant to Achieve Objective C Year-round 13-8
13-9 Estimated Cost per capacity for Upgrading Trickling Filter Plant to Achieve Objective C Year-Round 13-9
13-10 Estimated Cost per capacity for Upgrading Trickling Filter/Solids Contact Plant to Achieve Objective C Year-Round 13-9
13-11 Estimated Cost per capacity for Upgrading RBC Plant to Achieve Objective C Year-Round 13-9
13-12 Estimated Cost per Weight of Nutrient Removal for Upgrading Trickling Filter Plant to Achieve Objective C Year-round 13-13
13-13 Estimated Cost per Weight of Nutrient Removal for Upgrading Trickling Filter/Solids Contact Plant to Achieve Objective C Year-round 13-13
13-14 Estimated Cost per Weight of Nutrient Removal for Upgrading RBC Plant to Achieve Objective C Year-round 13-13
13-15 Estimated Cost per capacity for Upgrading MBR Plant to Achieve Objective C Year-Round 13-14
13-16 Estimated Cost per Weight of Nutrient Removal for Upgrading MBR Plant to Achieve Objective C Year-round 13-15
13-17 Estimated Cost per capacity for Upgrading Aerated Lagoon Plant to Achieve Objective C Year Round 13-16
13-18 Estimated Cost per capacity for Upgrading Facultative Lagoon Plant to Achieve Objective C Year Round 13-16
13-19 Estimated Cost per Weight of Nutrient Removal for Upgrading Aerated Lagoon Plant to Achieve Objective C Year-round 13-19

13-20 Estimated Cost per Weight of Nutrient Removal for Upgrading Facultative Lagoon Plant to Achieve Objective C Year-round 13-19
13-21 Estimated Cost per capacity for Upgrading Extended Aeration (Mechanical Aeration) Plant to Achieve Objective C Seasonally 13-20
13-22 Estimated Cost per capacity for Upgrading Extended Aeration (Diffuser Aeration) Plant to Achieve Objective C Seasonally 13-20
13-23 Estimated Cost per Weight of Nutrient Removal for Upgrading EA (Mechanical Aeration) Plant to Achieve Objective C Seasonally 13-23
13-24 Estimated Cost per Weight of Nutrient Removal for Upgrading EA (Diffuser Aeration) Plant to Achieve Objective C Seasonally 13-23
13-25 Estimated Cost per capacity for Upgrading CAS Plant to Achieve Objective C Seasonally 13-24
13-26 Estimated Cost per Weight of Nutrient Removal for Upgrading CAS Plant to Achieve Objective C Seasonally 13-25
13-27 Estimated Cost per capacity for Upgrading SBR Plant to Achieve Objective C Seasonally 13-26
13-28 Unit Nutrient Removal Costs for Upgrading SBR Plant to Achieve Objective C Seasonally 13-27
13-29 Estimated Cost per capacity for Upgrading Trickling Filter Plant to Achieve Objective C Seasonally 13-28
13-30 Estimated Cost per capacity for Upgrading Trickling Filter/Solids Contact Plant to Achieve Objective C Seasonally 13-28
13-31 Estimated Cost per capacity for Upgrading RBC Plant to Achieve Objective C Seasonally 13-28
13-32 Estimated Cost per Weight of Nutrient Removal for Upgrading TF Plant to Achieve Objective C Seasonally 13-32
13-33 Estimated Cost per Weight of Nutrient Removal for Upgrading TF/SC Plant to Achieve Objective C Seasonally 13-32
13-34 Estimated Cost per Weight of Nutrient Removal for Upgrading RBC Plant to Achieve Objective C Seasonally 13-32
13-35 Estimated Cost per capacity for Upgrading MBR Plant to Achieve Objective C Seasonally 13-33
13-36 Estimated Cost per Weight of Nutrient Removal for Upgrading MBR Plant to Achieve Objective C Seasonally 13-34
13-37 Estimated Cost per capacity for Upgrading Aerated Lagoon Plant to Achieve Objective C Seasonally 13-35
13-38 Estimated Cost per capacity for Upgrading Facultative Lagoon Plant to Achieve Objective C Seasonally 13-35
13-39 Estimated Cost per Weight of Nutrient Removal for Upgrading Aerated Lagoon Plant to Achieve Objective C Seasonally 13-38
13-40 Estimated Cost per Weight of Nutrient Removal for Upgrading Facultative Lagoon Plant to Achieve Objective C Seasonally 13-38

14-1 Estimated Cost per capacity for Upgrading Extended Aeration (Mechanical Aeration) Plant to Achieve Objective D Year-Round 14-1
14-2 Estimated Cost per capacity for Upgrading Extended Aeration (Diffuser Aeration) Plant to Achieve Objective D Year-Round 14-1
14-3 Estimated Cost per Weight of Nutrient Removal for Upgrading Extended Aeration (Mechanical Aeration) Plant to Achieve Objective D Year-round 14-4
14-4 Estimated Cost per Weight of Nutrient Removal for Upgrading Extended Aeration (Diffuser Aeration) Plant to Achieve Objective D Year-round 14-4

14-5 Estimated Cost per capacity for Upgrading CAS Plant to Achieve Objective D Year-Round 14-5
14-6 Estimated Cost per Weight of Nutrient Removal for Upgrading CAS Plant to Achieve Objective D Year-round 14-6
14-7 Estimated Cost per capacity for Upgrading SBR Plant to Achieve Objective D Year-Round 14-7
14-8 Estimated Cost per Weight of Nutrient Removal for Upgrading SBR Plant to Achieve Objective D Year-round 14-8
14-9 Estimated Cost per capacity for Upgrading Trickling Filter Plant to Achieve Objective D Year-Round 14-9
14-10 Estimated Cost per capacity for Upgrading Trickling Filter/Solids Contact Plant to Achieve Objective D Year-Round 14-9
14-11 Estimated Cost per capacity for Upgrading RBC Plant to Achieve Objective D Year-Round 14-9
14-12 Estimated Cost per Weight of Nutrient Removal for Upgrading Trickling Filter Plant to Achieve Objective D Year-round 14-13
14-13 Estimated Cost per Weight of Nutrient Removal for Upgrading Trickling Filter/Solids Contact Plant to Achieve Objective D Year-round 14-13
14-14 Estimated Cost per Weight of Nutrient Removal for Upgrading RBC Plant to Achieve Objective D Year-round 14-13
14-15 Estimated Cost per capacity for Upgrading MBR Plant to Achieve Objective D Year-Round 14-14
14-16 Estimated Cost per Weight of Nutrient Removal for Upgrading MBR Plant to Achieve Objective D Year-round 14-15
14-17 Estimated Cost per capacity for Upgrading Aerated Lagoon Plant to Achieve Objective D Year Round 14-16
14-18 Estimated Cost per capacity for Upgrading Facultative Lagoon Plant to Achieve Objective D Year Round 14-16
14-19 Estimated Cost per Weight of Nutrient Removal for Upgrading Aerated Lagoon Plant to Achieve Objective D Year-round 14-19
14-20 Estimated Cost per Weight of Nutrient Removal for Upgrading Facultative Lagoon Plant to Achieve Objective D Year-round 14-19
14-21 Estimated Cost per capacity for Upgrading Extended Aeration (Mechanical Aeration) Plant to Achieve Objective D Seasonally 14-20
14-22 Estimated Cost per capacity for Upgrading Extended Aeration (Diffuser Aeration) Plant to Achieve Objective D Seasonally 14-20
14-23 Estimated Cost per Weight of Nutrient Removal for Upgrading EA (Mechanical Aeration) Plant to Achieve Objective D Seasonally 14-23
14-24 Estimated Cost per Weight of Nutrient Removal for Upgrading EA (Diffuser Aeration) Plant to Achieve Objective D Seasonally 14-23
14-25 Estimated Cost per capacity for Upgrading CAS Plant to Achieve Objective D Seasonally 14-24
14-26 Estimated Cost per Weight of Nutrient Removal for Upgrading CAS Plant to Achieve Objective D Seasonally 14-25
14-27 Estimated Cost per capacity for Upgrading SBR Plant to Achieve Objective D Seasonally 14-26
14-28 Unit Nutrient Removal Costs for Upgrading SBR Plant to Achieve Objective D Seasonally 14-27
14-29 Estimated Cost per capacity for Upgrading Trickling Filter Plant to Achieve Objective D Seasonally 14-28

14-30 Estimated Cost per capacity for Upgrading Trickling Filter/Solids Contact Plant to Achieve Objective D Seasonally 14-28
14-31 Estimated Cost per capacity for Upgrading RBC Plant to Achieve Objective D Seasonally 14-28
14-32 Estimated Cost per Weight of Nutrient Removal for Upgrading TF Plant to Achieve Objective D Seasonally 14-32
14-33 Estimated Cost per Weight of Nutrient Removal for Upgrading TF/SC Plant to Achieve Objective D Seasonally 14-32
14-34 Estimated Cost per Weight of Nutrient Removal for Upgrading RBC Plant to Achieve Objective D Seasonally 14-32
14-35 Estimated Cost per capacity for Upgrading MBR Plant to Achieve Objective D Seasonally 14-33
14-36 Estimated Cost per Weight of Nutrient Removal for Upgrading MBR Plant to Achieve Objective D Seasonally 14-34
14-37 Estimated Cost per capacity for Upgrading Aerated Lagoon Plant to Achieve Objective D Seasonally 14-35
14-38 Estimated Cost per capacity for Upgrading Facultative Lagoon Plant to Achieve Objective D Seasonally 14-35
14-39 Estimated Cost per Weight of Nutrient Removal for Upgrading Aerated Lagoon Plant to Achieve Objective D Seasonally 14-38
14-40 Estimated Cost per Weight of Nutrient Removal for Upgrading Facultative Lagoon Plant to Achieve Objective D Seasonally 14-38

15-1 Estimated Cost per capacity for Upgrading Extended Aeration (Mechanical Aeration) Plant to Achieve Objective E Year-Round 15-1
15-2 Estimated Cost per capacity for Upgrading Extended Aeration (Diffuser Aeration) Plant to Achieve Objective E Year-Round 15-1
15-3 Estimated Cost per Weight of Nutrient Removal for Upgrading Extended Aeration (Mechanical Aeration) Plant to Achieve Objective E Year-round 15-4
15-4 Estimated Cost per Weight of Nutrient Removal for Upgrading Extended Aeration (Diffuser Aeration) Plant to Achieve Objective E Year-round 15-4
15-5 Estimated Cost per capacity for Upgrading CAS Plant to Achieve Objective E Year-Round 15-5
15-6 Estimated Cost per Weight of Nutrient Removal for Upgrading CAS Plant to Achieve Objective E Year-round 15-6
16-7 Estimated Cost per capacity for Upgrading SBR Plant to Achieve Objective E Year-Round 15-7
15-8 Estimated Cost per Weight of Nutrient Removal for Upgrading SBR Plant to Achieve Objective E Year-round 15-8
15-9 Estimated Cost per capacity for Upgrading Trickling Filter Plant to Achieve Objective E Year-Round 15-9
15-10 Estimated Cost per capacity for Upgrading Trickling Filter/Solids Contact Plant to Achieve Objective E Year-Round 15-9
15-11 Estimated Cost per capacity for Upgrading RBC Plant to Achieve Objective E Year-Round 15-9
15-12 Estimated Cost per Weight of Nutrient Removal for Upgrading Trickling Filter Plant to Achieve Objective E Year-round 15-13
15-13 Estimated Cost per Weight of Nutrient Removal for Upgrading Trickling Filter/Solids Contact Plant to Achieve Objective E Year-round 15-13
15-14 Estimated Cost per Weight of Nutrient Removal for Upgrading RBC Plant to Achieve Objective E Year-round 15-14

15-15 Estimated Cost per capacity for Upgrading MBR Plant to Achieve Objective E Year-Round 15-15
15-16 Estimated Cost per Weight of Nutrient Removal for Upgrading MBR Plant to Achieve Objective E Year-round 15-16
15-17 Estimated Cost per capacity for Upgrading Aerated Lagoon Plant to Achieve Objective E Year Round 15-17
15-18 Estimated Cost per capacity for Upgrading Facultative Lagoon Plant to Achieve Objective E Year Round 15-17
15-19 Estimated Cost per Weight of Nutrient Removal for Upgrading Aerated Lagoon Plant to Achieve Objective E Year-round 15-20
15-20 Estimated Cost per Weight of Nutrient Removal for Upgrading Facultative Lagoon Plant to Achieve Objective E Year-round 15-20
15-21 Estimated Cost per capacity for Upgrading Extended Aeration (Mechanical Aeration) Plant to Achieve Objective E Seasonally 15-21
15-22 Estimated Cost per capacity for Upgrading Extended Aeration (Diffuser Aeration) Plant to Achieve Objective E Seasonally 15-21
15-23 Estimated Cost per Weight of Nutrient Removal for Upgrading EA (Mechanical Aeration) Plant to Achieve Objective E Seasonally 15-24
15-24 Estimated Cost per Weight of Nutrient Removal for Upgrading EA (Diffuser Aeration) Plant to Achieve Objective E Seasonally 15-24
15-25 Estimated Cost per capacity for Upgrading CAS Plant to Achieve Objective E Seasonally 15-25
15-26 Estimated Cost per Weight of Nutrient Removal for Upgrading CAS Plant to Achieve Objective E Seasonally 15-26
15-27 Estimated Cost per capacity for Upgrading SBR Plant to Achieve Objective E Seasonally 15-27
15-28 Unit Nutrient Removal Costs for Upgrading SBR Plant to Achieve Objective E Seasonally 15-28
15-29 Estimated Cost per capacity for Upgrading Trickling Filter Plant to Achieve Objective E Seasonally 15-29
15-30 Estimated Cost per capacity for Upgrading Trickling Filter/Solids Contact Plant to Achieve Objective E Seasonally 15-29
15-31 Estimated Cost per capacity for Upgrading RBC Plant to Achieve Objective E Seasonally 15-29
15-32 Estimated Cost per Weight of Nutrient Removal for Upgrading TF Plant to Achieve Objective E Seasonally 15-33
15-33 Estimated Cost per Weight of Nutrient Removal for Upgrading TF/SC Plant to Achieve Objective E Seasonally 15-33
15-34 Estimated Cost per Weight of Nutrient Removal for Upgrading RBC Plant to Achieve Objective E Seasonally 15-34
15-35 Estimated Cost per capacity for Upgrading MBR Plant to Achieve Objective E Seasonally 15-35
15-36 Estimated Cost per Weight of Nutrient Removal for Upgrading MBR Plant to Achieve Objective E Seasonally 15-36
15-37 Estimated Cost per capacity for Upgrading Aerated Lagoon Plant to Achieve Objective E Seasonally 15-37
15-38 Estimated Cost per capacity for Upgrading Facultative Lagoon Plant to Achieve Objective E Seasonally 15-37
15-39 Estimated Cost per Weight of Nutrient Removal for Upgrading Aerated Lagoon Plant to Achieve Objective E Seasonally 15-40

15-40 Estimated Cost per Weight of Nutrient Removal for Upgrading Facultative Lagoon Plant to Achieve Objective E Seasonally 15-40

16-1 Estimated Cost per capacity for Upgrading Extended Aeration (Mechanical Aeration) Plant to Achieve Objective F Year-Round 16-1
16-2 Estimated Cost per capacity for Upgrading Extended Aeration (Diffuser Aeration) Plant to Achieve Objective F Year-Round 16-1
16-3 Estimated Cost per Weight of Nutrient Removal for Upgrading Extended Aeration (Mechanical Aeration) Plant to Achieve Objective F Year-round 16-4
16-4 Estimated Cost per Weight of Nutrient Removal for Upgrading Extended Aeration (Diffuser Aeration) Plant to Achieve Objective F Year-round 16-4
16-5 Estimated Cost per capacity for Upgrading CAS Plant to Achieve Objective F Year-Round 16-5
16-6 Estimated Cost per Weight of Nutrient Removal for Upgrading CAS Plant to Achieve Objective F Year-round 16-6
16-7 Estimated Cost per capacity for Upgrading SBR Plant to Achieve Objective F Year-Round 16-7
16-8 Estimated Cost per Weight of Nutrient Removal for Upgrading SBR Plant to Achieve Objective F Year-round 16-8
16-9 Estimated Cost per capacity for Upgrading Trickling Filter Plant to Achieve Objective F Year-Round 16-9
16-10 Estimated Cost per capacity for Upgrading Trickling Filter/Solids Contact Plant to Achieve Objective F Year-Round 16-9
16-11 Estimated Cost per capacity for Upgrading RBC Plant to Achieve Objective F Year-Round 16-9
16-12 Estimated Cost per Weight of Nutrient Removal for Upgrading Trickling Filter Plant to Achieve Objective F Year-round 16-13
16-13 Estimated Cost per Weight of Nutrient Removal for Upgrading Trickling Filter/Solids Contact Plant to Achieve Objective F Year-round 16-13
16-14 Estimated Cost per Weight of Nutrient Removal for Upgrading RBC Plant to Achieve Objective F Year-round 16-14
16-15 Estimated Cost per capacity for Upgrading MBR Plant to Achieve Objective F Year-Round 16-15
16-16 Estimated Cost per Weight of Nutrient Removal for Upgrading MBR Plant to Achieve Objective F Year-round 16-16
16-17 Estimated Cost per capacity for Upgrading Aerated Lagoon Plant to Achieve Objective F Year Round 16-17
16-18 Estimated Cost per capacity for Upgrading Facultative Lagoon Plant to Achieve Objective F Year Round 16-17
16-19 Estimated Cost per Weight of Nutrient Removal for Upgrading Aerated Lagoon Plant to Achieve Objective F Year-round 16-20
16-20 Estimated Cost per Weight of Nutrient Removal for Upgrading Facultative Lagoon Plant to Achieve Objective F Year-round 16-20
16-21 Estimated Cost per capacity for Upgrading Extended Aeration (Mechanical Aeration) Plant to Achieve Objective F Seasonally 16-21
16-22 Estimated Cost per capacity for Upgrading Extended Aeration (Diffuser Aeration) Plant to Achieve Objective F Seasonally 16-21
16-23 Estimated Cost per Weight of Nutrient Removal for Upgrading EA (Mechanical Aeration) Plant to Achieve Objective F Seasonally 16-24
16-24 Estimated Cost per Weight of Nutrient Removal for Upgrading EA (Diffuser Aeration) Plant to Achieve Objective F Seasonally 16-24

16-25 Estimated Cost per capacity for Upgrading CAS Plant to Achieve Objective F Seasonally 16-25
16-26 Estimated Cost per Weight of Nutrient Removal for Upgrading CAS Plant to Achieve Objective F Seasonally 16-26
16-27 Estimated Cost per capacity for Upgrading SBR Plant to Achieve Objective F Seasonally 16-27
16-28 Unit Nutrient Removal Costs for Upgrading SBR Plant to Achieve Objective F Seasonally 16-28
16-29 Estimated Cost per capacity for Upgrading Trickling Filter Plant to Achieve Objective F Seasonally 16-29
16-30 Estimated Cost per capacity for Upgrading Trickling Filter/Solids Contact Plant to Achieve Objective F Seasonally 16-29
16-31 Estimated Cost per capacity for Upgrading RBC Plant to Achieve Objective F Seasonally 16-29
16-32 Estimated Cost per Weight of Nutrient Removal for Upgrading TF Plant to Achieve Objective F Seasonally 16-33
16-33 Estimated Cost per Weight of Nutrient Removal for Upgrading TF/SC Plant to Achieve Objective F Seasonally 16-33
16-34 Estimated Cost per Weight of Nutrient Removal for Upgrading RBC Plant to Achieve Objective F Seasonally 16-34
16-35 Estimated Cost per capacity for Upgrading MBR Plant to Achieve Objective F Seasonally 16-35
16-36 Estimated Cost per Weight of Nutrient Removal for Upgrading MBR Plant to Achieve Objective F Seasonally 16-36
16-37 Estimated Cost per capacity for Upgrading Aerated Lagoon Plant to Achieve Objective F Seasonally 16-37
16-38 Estimated Cost per capacity for Upgrading Facultative Lagoon Plant to Achieve Objective F Seasonally 16-37
16-39 Estimated Cost per Weight of Nutrient Removal for Upgrading Aerated Lagoon Plant to Achieve Objective F Seasonally 16-40
16-40 Estimated Cost per Weight of Nutrient Removal for Upgrading Facultative Lagoon Plant to Achieve Objective F Seasonally 16-40

17-1 Estimated Capital Costs for Nutrient Removal Upgrades of all Treatment Plants in Washington 17-2
17-2 Estimated Annual O&M Costs for Nutrient Removal Upgrades of all Treatment Plants in Washington 17-3
17-3 Estimated Annual Capital and O&M Costs for Nutrient Removal Upgrades of all Treatment Plants in Washington 17-4
17-4 Estimated Monthly Household Sewer Rate Increase for Nutrient Removal Upgrades of all Treatment Plants in Washington 17-5
17-5 Estimated Capital and O&M Costs by WRIA for Year-Round Nutrient Removal 17-7
17-6 Estimated Capital and O&M Costs by WRIA for Dry-Season Nutrient Removal 17-8

18-1 Design Criteria for Processes to Provide Class A Reclaimed Water 18-3
18-2 Estimated Capital Costs for Year-Round Reclaimed Water Upgrades for Non-Membrane Plants 18-4
18-3 Estimated Annual O&M Costs for Year-Round Reclaimed Water Upgrades for Non-Membrane Plants 18-5
18-4 Estimated Annualized Capital and O&M Costs for Year-Round Reclaimed Water Upgrades for Non-Membrane Plants 18-6

18-5 Estimated Capital Costs for Year-Round Reclaimed Water Upgrades for Membrane Plants 18-7
18-6 Estimated Annual O&M Costs for Year-Round Reclaimed Water Upgrades for Membrane Plants 18-8
18-7 Estimated Annualized Capital and O&M Costs for Year-Round Reclaimed Water Upgrades for Membrane Plants 18-9
18-8 Annualized Capital Costs for Year-Round Nitrogen Removal and Reclaimed Water Upgrades for Extended Aeration Plants (Mechanical Aeration) 18-10
18-9 Annual O&M Costs for Year-Round Nitrogen Removal and Reclaimed Water Upgrades for Extended Aeration Plants (Mechanical Aeration) 18-10
18-10 Annualized Capital Costs for Year-Round Nitrogen Removal and Reclaimed Water Upgrades for Extended Aeration Plants (Diffused Aeration) 18-10
18-11 Annual O&M Costs for Year-Round Nitrogen Removal and Reclaimed Water Upgrades for Extended Aeration Plants (Diffused Aeration) 18-10
18-12 Annualized Capital Costs for Year-Round Nitrogen Removal and Reclaimed Water Upgrades for Conventional Activated Sludge Plants 18-11
18-13 Annual O&M Costs for Year-Round Nitrogen Removal and Reclaimed Water Upgrades for Conventional Activated Sludge Plants 18-11
18-14 Annualized Capital Costs for Year-Round Nitrogen Removal and Reclaimed Water Upgrades for Sequencing Batch Reactor Plants 18-11
18-15 Annual O&M Costs for Year-Round Nitrogen Removal and Reclaimed Water Upgrades for Sequencing Batch Reactor Plants 18-12
18-16 Annualized Capital Costs for Year-Round Nitrogen Removal and Reclaimed Water Upgrades for Trickling Filter Plants 18-12
18-17 Annual O&M Costs for Year-Round Nitrogen Removal and Reclaimed Water Upgrades for Trickling Filter Plants 18-12
18-18 Annualized Capital Costs for Year-Round Nitrogen Removal and Reclaimed Water Upgrades for Rotating Biological Contactor Plants 18-13
18-19 Annual O&M Costs for Year-Round Nitrogen Removal and Reclaimed Water Upgrades for Rotating Biological Contactor Plants 18-13
18-20 Annualized Capital Costs for Year-Round Nitrogen Removal and Reclaimed Water Upgrades for Trickling Filter/Solids Contact Plants 18-13
18-21 Annual O&M Costs for Year-Round Nitrogen Removal and Reclaimed Water Upgrades for Trickling Filter/Solids Contact Plants 18-13
18-22 Annualized Capital Costs for Year-Round Nitrogen Removal and Reclaimed Water Upgrades for Membrane Bioreactor Plants 18-14
18-23 Annual O&M Costs for Year-Round Nitrogen Removal and Reclaimed Water Upgrades for Membrane Bioreactor Plants 18-14
18-24 Annualized Capital Costs for Year-Round Nitrogen Removal and Reclaimed Water Upgrades for High-Purity Oxygen Activated Sludge Plants 18-14
18-25 Annual O&M Costs for Year-Round Nitrogen Removal and Reclaimed Water Upgrades for High-Purity Oxygen Activated Sludge Plants 18-15
18-26 Annualized Capital Costs for Year-Round Nitrogen Removal and Reclaimed Water Upgrades for Facultative Lagoon Plants 18-15
18-27 Annual O&M Costs for Year-Round Nitrogen Removal and Reclaimed Water Upgrades for Facultative Lagoon Plants 18-15
18-28 Annualized Capital Costs for Year-Round Nitrogen Removal and Reclaimed Water Upgrades for Aerated Lagoon Plants 18-16
18-29 Annual O&M Costs for Year-Round Nitrogen Removal and Reclaimed Water Upgrades for Aerated Lagoon Plants 18-16

18-30 Estimated Capital Costs for Seasonal Reclaimed Water Upgrades for Non-Membrane Plants 18-17
18-31 Estimated Annual O&M Costs for Seasonal Reclaimed Water Upgrades for Non-Membrane Plants 18-18
18-32 Estimated Annualized Capital and O&M Costs for Seasonal Reclaimed Water Upgrades for Non-Membrane Plants 18-19
18-33 Estimated Capital Costs for Seasonal Reclaimed Water Upgrades for Membrane Plants 18-20
18-34 Estimated Annual O&M Costs for Seasonal Reclaimed Water Upgrades for Membrane Plants 18-21
18-35 Estimated Annualized Capital and O&M Costs for Seasonal Reclaimed Water Upgrades for Membrane Plants 18-22
18-36 Annualized Capital Costs for Seasonal Nitrogen Removal and Reclaimed Water Upgrades for Extended Aeration Plants (Mechanical Aeration) 18-23
18-37 Annual O&M Costs for Seasonal Nitrogen Removal and Reclaimed Water Upgrades for Extended Aeration Plants (Mechanical Aeration) 18-23
18-38 Annualized Capital Costs for Seasonal Nitrogen Removal and Reclaimed Water Upgrades for Extended Aeration Plants (Diffused Aeration) 18-23
18-39 Annual O&M Costs for Seasonal Nitrogen Removal and Reclaimed Water Upgrades for Extended Aeration Plants (Diffused Aeration) 18-23
18-40 Annualized Capital Costs for Seasonal Nitrogen Removal and Reclaimed Water Upgrades for Conventional Activated Sludge Plants 18-24
18-41 Annual O&M Costs for Seasonal Nitrogen Removal and Reclaimed Water Upgrades for Conventional Activated Sludge Plants 18-24
18-42 Annualized Capital Costs for Seasonal Nitrogen Removal and Reclaimed Water Upgrades for Sequencing Batch Reactor Plants 18-24
18-43 Annual O&M Costs for Seasonal Nitrogen Removal and Reclaimed Water Upgrades for Sequencing Batch Reactor Plants 18-25
18-44 Annualized Capital Costs for Seasonal Nitrogen Removal and Reclaimed Water Upgrades for Trickling Filter Plants 18-25
18-45 Annual O&M Costs for Seasonal Nitrogen Removal and Reclaimed Water Upgrades for Trickling Filter Plants 18-25
18-46 Annualized Capital Costs for Seasonal Nitrogen Removal and Reclaimed Water Upgrades for Rotating Biological Contactor Plants 18-26
18-47 Annual O&M Costs for Seasonal Nitrogen Removal and Reclaimed Water Upgrades for Rotating Biological Contactor Plants 18-26
18-48 Annualized Capital Costs for Seasonal Nitrogen Removal and Reclaimed Water Upgrades for Trickling Filter/Solids Contact Plants 18-26
18-49 Annual O&M Costs for Seasonal Nitrogen Removal and Reclaimed Water Upgrades for Trickling Filter/Solids Contact Plants 18-26
18-50 Annualized Capital Costs for Seasonal Nitrogen Removal and Reclaimed Water Upgrades for Membrane Bioreactor Plants 18-27
18-51 Annual O&M Costs for Seasonal Nitrogen Removal and Reclaimed Water Upgrades for Membrane Bioreactor Plants 18-27
18-52 Annualized Capital Costs for Seasonal Nitrogen Removal and Reclaimed Water Upgrades for High-Purity Oxygen Activated Sludge Plants 18-27
18-53 Annual O&M Costs for Seasonal Nitrogen Removal and Reclaimed Water Upgrades for High-Purity Oxygen Activated Sludge Plants 18-28
18-54 Annualized Capital Costs for Seasonal Nitrogen Removal and Reclaimed Water Upgrades for Facultative Lagoon Plants 18-28

18-55 Annual O&M Costs for Seasonal Nitrogen Removal and Reclaimed Water Upgrades for Facultative Lagoon Plants 18-28
18-56 Annualized Capital Costs for Seasonal Nitrogen Removal and Reclaimed Water Upgrades for Aerated Lagoon Plants 18-29
18-57 Annual O&M Costs for Seasonal Nitrogen Removal and Reclaimed Water Upgrades for Aerated Lagoon Plants 18-29

LIST OF FIGURES

No.	Title	Page No.
ES-1	Distribution of Washington Municipal Treatment Plants by Type of Technology	ES-2
2-1	Number of Plants and Percentage of Total Statewide Treatment Capacity by Process Type	2-3
2-2	Distribution of Municipal Wastewater Treatment Plants in Washington by Capacity Range	2-3
4-1	Process Flow Schematic of an Extended Aeration Treatment Plant with Aeration Tank	4-1
4-2	Modified Ludzack-Ettinger Process Flow Schematic	4-3
4-3	Process Schematic of Extended Aeration Plant Upgraded for Objective A Year-Round	4-4
4-4	Four-Stage Bardenpho Process Flow Schematic	4-7
4-5	Process Schematic of Extended Aeration Plant Upgraded for Objective B Year-Round	4-8
4-6	Process Schematic of Extended Aeration Plant Upgraded for Objective C Year-Round	4-11
4-7	Process Schematic of Extended Aeration Plant Upgraded for Objective D Year-Round	4-16
5-1	Process Flow Schematic of Conventional Activated Sludge Treatment Plant	5-1
5-2	Process Schematic of CAS Plant Upgraded for Objective A Year-Round	5-3
5-3	Process Schematic of CAS Plant Upgraded for Objective B Year-Round	5-6
5-4	Process Schematic of CAS Plant Upgraded for Objective C Year-Round	5-9
5-5	Process Schematic of CAS Plant Upgraded for Objective D Year-Round	5-11
5-6	Process Schematic of CAS Plant Upgraded for Objective A, Seasonal	5-17
5-7	Process Schematic of CAS Plant Upgraded for Objective B, Seasonal	5-20
6-1	Process Flow Schematic of Sequencing Batch Reactor Treatment Plant	6-1
8-1	Process flow Schematic for an Existing MBR Plant	8-1
8-2	Process Schematic of MBR Plant Upgraded for Objective B Year-Round	8-4
8-3	Process Schematic of MBR Plant Upgraded for Objective C Year Round	8-5
9-1	Process Flow Schematic for an Existing HPO Plant	9-1
9-2	Process Schematic of HPO Plant Upgraded for Objective A Year-Round	9-3
9-3	Process Schematic of HPO Plant Upgraded for Objective B Year-Round	9-5
9-4	Process Schematic of HOP Plant Upgraded for Objective A Seasonal	9-8
9-5	Process Schematic of HOP Plant Upgraded for Objective B Seasonal	9-9
10-1	Process Schematic of Clarifier Used to Upgrade Lagoon Plant for Objective C Year-Round	10-7
10-2	Process Schematic of Upgraded Lagoon Plant for Objective D Year-Round	10-9
11-1	Capital Cost per Plant Capacity for Extended Aeration (Mechanical Aeration) Plant Upgraded for Objective A Year-Round	11-2
11-2	O&M Cost per Plant Capacity for Extended Aeration (Mechanical Aeration) Plant Upgraded for Objective A Year Round	11-2
11-3	Capital Cost per Plant Capacity for Extended Aeration (Diffuser Aeration) Plant Upgraded for Objective A Year-Round	11-3
11-4	O&M Cost per Plant Capacity for Extended Aeration (Diffuser Aeration) Plant Upgraded for Objective A Year Round	11-3
11-5	Capital Cost per Plant Capacity for CAS Plant Upgraded for Objective A Year-Round	11-5
11-6	O&M Cost per Plant Capacity for CAS Plant Upgraded for Objective A Year-Round	11-6
11-7	Capital Cost per Plant Capacity for SBR Plant Upgraded for Objective A Year-Round	11-7

11-8 O&M Cost per Plant Capacity for SBR Plant Upgraded for Objective A Year-Round 11-8
11-9 Capital Cost per Plant Capacity for Trickling Filter Plant Upgraded for Objective A Year-Round 11-10
11-10 O&M Cost per Plant Capacity for Trickling Filter Plant Upgraded for Objective A Year-Round 11-10
11-11 Capital Cost per Plant Capacity for Trickling Filter/Solids Contact Plant Upgraded for Objective A Year-Round 11-11
11-12 O&M Cost per Plant Capacity for Trickling Filter/Solids Contact Plant Upgraded for Objective A Year-Round 11-11
11-13 Capital Cost per Plant Capacity for RBC Upgraded for Objective A Year-Round 11-12
11-14 O&M Cost per Plant Capacity for RBC Plant Upgraded for Objective A Year-Round 11-12
11-15 Capital Cost per Plant Capacity for HPO Plant Upgraded for Objective A Year-Round 11-14
11-16 O&M Cost per Plant Capacity for HPO Plant Upgraded for Objective A Year-Round 11-15
11-17 Capital Cost per Plant Capacity for Aerated Lagoon Plant Upgraded for Objective A Year-Round 11-17
11-18 O&M Cost per Plant Capacity for Aerated Lagoon Plant Upgraded for Objective A Year-Round 11-17
11-19 Capital Cost per Plant Capacity for Facultative Lagoon Plant Upgraded for Objective A Year-Round 11-18
11-20 O&M Cost per Plant Capacity for Facultative Lagoon Plant Upgraded for Objective A Year-Round 11-18
11-21 Capital Cost per Plant Capacity for Extended Aeration (Mechanical Aeration) Plant Upgraded for Objective A Seasonally..... 11-21
11-22 O&M Cost per Plant Capacity for Extended Aeration (Mechanical Aeration) Plant Upgraded for Objective A Seasonal..... 11-21
11-23 Capital Cost per Plant Capacity for Extended Aeration (Diffuser Aeration) Plant Upgraded for Objective A Seasonally..... 11-22
11-24 O&M Cost per Plant Capacity for Extended Aeration (Diffuser Aeration) Plant Upgraded for Objective A Seasonal..... 11-22
11-25 Capital Cost per Plant Capacity for CAS Plant Upgraded for Objective A Seasonally..... 11-24
11-26 O&M Cost per Plant Capacity for CAS Plant Upgraded for Objective A Seasonal..... 11-25
11-27 Capital Cost per Plant Capacity for SBR Plant Upgraded for Objective A Seasonally..... 11-26
11-28 O&M Cost per Plant Capacity for SBR Plant Upgraded for Objective A Seasonal..... 11-27
11-29 Capital Cost per Plant Capacity for Trickling Filter Plant Upgraded for Objective A Seasonally..... 11-29
11-30 O&M Cost per Plant Capacity for Trickling Filter Plant Upgraded for Objective A Seasonal..... 11-29
11-31 Capital Cost per Plant Capacity for Trickling Filter/Solids Contact Plant Upgraded for Objective A Seasonally..... 11-30
11-32 O&M Cost per Plant Capacity for Trickling Filter/Solids Contact Plant Upgraded for Objective A Seasonal..... 11-30
11-33 Capital Cost per Plant Capacity for RBC Plant Upgraded for Objective A Seasonally 11-31
11-34 O&M Cost per Plant Capacity for RBC Plant Upgraded for Objective A Seasonal..... 11-31
11-35 Capital Cost per Plant Capacity for HPO Plant Upgraded for Objective A Seasonal..... 11-33
11-36 O&M Cost per Plant Capacity for HPO Plant Upgraded for Objective A Seasonal..... 11-34
11-37 Capital Cost per Plant Capacity for Aerated Lagoon Plant Upgraded for Objective A Seasonally..... 11-36
11-38 O&M Cost per Plant Capacity for Aerated Lagoon Plant Upgraded for Objective A Seasonal..... 11-36
11-39 Capital Cost per Plant Capacity for Facultative Lagoon Plant Upgraded for Objective A Seasonally..... 11-37

11-40 O&M Cost per Plant Capacity for Facultative Lagoon Plant Upgraded for Objective A Seasonal 11-37

12-1 Capital Cost per Plant Capacity for Extended Aeration (Mechanical Aeration) Plant Upgraded for Objective B Year-Round 12-2
12-2 O&M Cost per Plant Capacity for Extended Aeration (Mechanical Aeration) Plant Upgraded for Objective B Year Round 12-2
12-3 Capital Cost per Plant Capacity for Extended Aeration (Diffuser Aeration) Plant Upgraded for Objective B Year-Round 12-3
12-4 O&M Cost per Plant Capacity for Extended Aeration (Diffuser Aeration) Plant Upgraded for Objective B Year Round 12-3
12-5 Capital Cost per Plant Capacity for CAS Plant Upgraded for Objective B Year-Round 12-5
12-6 O&M Cost per Plant Capacity for CAS Plant Upgraded for Objective B Year-Round 12-6
12-7 Capital Cost per Plant Capacity for SBR Plant Upgraded for Objective B Year-Round 12-7
12-8 O&M Cost per Plant Capacity for SBR Plant Upgraded for Objective B Year-Round 12-8
12-9 Capital Cost per Plant Capacity for Trickling Filter Plant Upgraded for Objective B Year-Round 12-10
12-10 O&M Cost per Plant Capacity for Trickling Filter Plant Upgraded for Objective B Year-Round 12-10
12-11 Capital Cost per Plant Capacity for Trickling Filter/Solids Contact Plant Upgraded for Objective B Year-Round 12-11
12-12 O&M Cost per Plant Capacity for Trickling Filter/Solids Contact Plant Upgraded for Objective B Year-Round 12-11
12-13 Capital Cost per Plant Capacity for RBC Upgraded for Objective B Year-Round 12-12
12-14 O&M Cost per Plant Capacity for RBC Plant Upgraded for Objective B Year-Round 12-12
12-15 Capital Cost per Plant Capacity for MBR Plant Upgraded for Objective B Year-Round 12-14
12-16 O&M Cost per Plant Capacity for MBR Plant Upgraded for Objective B Year-Round 12-15
12-17 Capital Cost per Plant Capacity for HPO Plant Upgraded for Objective B Year-Round 12-16
12-18 O&M Cost per Plant Capacity for HPO Upgraded for Objective B Year-Round 12-17
12-19 Capital Cost per Plant Capacity for Aerated Lagoon Plant Upgraded for Objective B Year-Round 12-19
12-20 O&M Cost per Plant Capacity for Aerated Lagoon Plant Upgraded for Objective B Year-Round 12-19
12-21 Capital Cost per Plant Capacity for Facultative Lagoon Plant Upgraded for Objective B Year-Round 12-20
12-22 O&M Cost per Plant Capacity for Facultative Lagoon Plant Upgraded for Objective B Year-Round 12-20
12-23 Capital Cost per Plant Capacity for Extended Aeration (Mechanical Aeration) Plant Upgraded for Objective B Seasonally 12-23
12-24 O&M Cost per Plant Capacity for Extended Aeration (Mechanical Aeration) Plant Upgraded for Objective B Seasonal 12-23
12-25 Capital Cost per Plant Capacity for Extended Aeration (Diffuser Aeration) Plant Upgraded for Objective B Seasonally 12-24
12-26 O&M Cost per Plant Capacity for Extended Aeration (Diffuser Aeration) Plant Upgraded for Objective B Seasonal 12-24
12-27 Capital Cost per Plant Capacity for CAS Plant Upgraded for Objective B Seasonally 12-26
12-28 O&M Cost per Plant Capacity for CAS Plant Upgraded for Objective B Seasonal 12-27
12-29 Capital Cost per Plant Capacity for SBR Plant Upgraded for Objective B Seasonally 12-28
12-30 O&M Cost per Plant Capacity for SBR Plant Upgraded for Objective B Seasonal 12-29
12-31 Capital Cost per Plant Capacity for Trickling Filter Plant Upgraded for Objective B Seasonally 12-31

12-32 O&M Cost per Plant Capacity for Trickling Filter Plant Upgraded for Objective B Seasonal 12-31
12-33 Capital Cost per Plant Capacity for Trickling Filter/Solids Contact Plant Upgraded for Objective B Seasonally 12-32
12-34 O&M Cost per Plant Capacity for Trickling Filter/Solids Contact Plant Upgraded for Objective B Seasonal 12-32
12-35 Capital Cost per Plant Capacity for RBC Plant Upgraded for Objective B Seasonally 12-33
12-36 O&M Cost per Plant Capacity for RBC Plant Upgraded for Objective B Seasonal 12-33
12-37 Capital Cost per Plant Capacity for MBR Plant Upgraded for Objective B Seasonally 12-35
12-38 O&M Cost per Plant Capacity for MBR Plant Upgraded for Objective B Seasonal 12-36
12-39 Capital Cost per Plant Capacity for HPO Plant Upgraded for Objective B Seasonal 12-37
12-40 O&M Cost per Plant Capacity for HPO Upgraded for Objective B Seasonal 12-38
12-41 Capital Cost per Plant Capacity for Aerated Lagoon Plant Upgraded for Objective B Seasonally 12-40
12-42 O&M Cost per Plant Capacity for Aerated Lagoon Plant Upgraded for Objective B Seasonal 12-40
12-43 Capital Cost per Plant Capacity for Facultative Lagoon Plant Upgraded for Objective B Seasonally 12-41
12-44 O&M Cost per Plant Capacity for Facultative Lagoon Plant Upgraded for Objective B Seasonal 12-41

13-1 Capital Cost per Plant Capacity for Extended Aeration (Mechanical Aeration) Plant Upgraded for Objective C Year-Round 13-2
13-2 O&M Cost per Plant Capacity for Extended Aeration (Mechanical Aeration) Plant Upgraded for Objective C Year Round 13-2
13-3 Capital Cost per Plant Capacity for Extended Aeration (Diffuser Aeration) Plant Upgraded for Objective C Year-Round 13-3
13-4 O&M Cost per Plant Capacity for Extended Aeration (Diffuser Aeration) Plant Upgraded for Objective C Year Round 13-3
13-5 Capital Cost per Plant Capacity for CAS Plant Upgraded for Objective C Year-Round 13-5
13-6 O&M Cost per Plant Capacity for CAS Plant Upgraded for Objective C Year-Round 13-6
13-7 Capital Cost per Plant Capacity for SBR Plant Upgraded for Objective C Year-Round 13-7
13-8 O&M Cost per Plant Capacity for SBR Plant Upgraded for Objective C Year-Round 13-8
13-9 Capital Cost per Plant Capacity for Trickling Filter Plant Upgraded for Objective C Year-Round 13-10
13-10 O&M Cost per Plant Capacity for Trickling Filter Plant Upgraded for Objective C Year-Round 13-10
13-11 Capital Cost per Plant Capacity for Trickling Filter/Solids Contact Plant Upgraded for Objective C Year-Round 13-11
13-12 O&M Cost per Plant Capacity for Trickling Filter/Solids Contact Plant Upgraded for Objective C Year-Round 13-11
13-13 Capital Cost per Plant Capacity for RBC Upgraded for Objective C Year-Round 13-12
13-14 O&M Cost per Plant Capacity for RBC Plant Upgraded for Objective C Year-Round 13-12
13-15 Capital Cost per Plant Capacity for MBR Plant Upgraded for Objective C Year-Round 13-14
13-16 O&M Cost per Plant Capacity for MBR Plant Upgraded for Objective C Year-Round 13-15
13-17 Capital Cost per Plant Capacity for Aerated Lagoon Plant Upgraded for Objective C Year-Round 13-17
13-18 O&M Cost per Plant Capacity for Aerated Lagoon Plant Upgraded for Objective C Year-Round 13-17
13-19 Capital Cost per Plant Capacity for Facultative Lagoon Plant Upgraded for Objective C Year-Round 13-18

13-20 O&M Cost per Plant Capacity for Facultative Lagoon Plant Upgraded for Objective C Year-Round 13-18
13-21 Capital Cost per Plant Capacity for Extended Aeration (Mechanical Aeration) Plant Upgraded for Objective C Seasonally 13-21
13-22 O&M Cost per Plant Capacity for Extended Aeration (Mechanical Aeration) Plant Upgraded for Objective C Seasonal 13-21
13-23 Capital Cost per Plant Capacity for Extended Aeration (Diffuser Aeration) Plant Upgraded for Objective C Seasonally 13-22
13-24 O&M Cost per Plant Capacity for Extended Aeration (Diffuser Aeration) Plant Upgraded for Objective C Seasonal 13-22
13-25 Capital Cost per Plant Capacity for CAS Plant Upgraded for Objective C Seasonally 13-24
13-26 O&M Cost per Plant Capacity for CAS Plant Upgraded for Objective C Seasonal 13-25
13-27 Capital Cost per Plant Capacity for SBR Plant Upgraded for Objective C Seasonally 13-26
13-28 O&M Cost per Plant Capacity for SBR Plant Upgraded for Objective C Seasonal 13-27
13-29 Capital Cost per Plant Capacity for Trickling Filter Plant Upgraded for Objective C Seasonally 13-29
13-30 O&M Cost per Plant Capacity for Trickling Filter Plant Upgraded for Objective C Seasonal 13-29
13-31 Capital Cost per Plant Capacity for Trickling Filter/Solids Contact Plant Upgraded for Objective C Seasonally 13-30
13-32 O&M Cost per Plant Capacity for Trickling Filter/Solids Contact Plant Upgraded for Objective C Seasonal 13-30
13-33 Capital Cost per Plant Capacity for RBC Plant Upgraded for Objective C Seasonally 13-31
13-34 O&M Cost per Plant Capacity for RBC Plant Upgraded for Objective C Seasonal 13-31
13-35 Capital Cost per Plant Capacity for MBR Plant Upgraded for Objective C Seasonally 13-33
13-36 O&M Cost per Plant Capacity for MBR Plant Upgraded for Objective C Seasonal 13-34
13-37 Capital Cost per Plant Capacity for Aerated Lagoon Plant Upgraded for Objective C Seasonally 13-36
13-38 O&M Cost per Plant Capacity for Aerated Lagoon Plant Upgraded for Objective C Seasonal 13-36
13-39 Capital Cost per Plant Capacity for Facultative Lagoon Plant Upgraded for Objective C Seasonally 13-37
13-40 O&M Cost per Plant Capacity for Facultative Lagoon Plant Upgraded for Objective C Seasonal 13-37

14-1 Capital Cost per Plant Capacity for Extended Aeration (Mechanical Aeration) Plant Upgraded for Objective D Year-Round 14-2
14-2 O&M Cost per Plant Capacity for Extended Aeration (Mechanical Aeration) Plant Upgraded for Objective D Year Round 14-2
14-3 Capital Cost per Plant Capacity for Extended Aeration (Diffuser Aeration) Plant Upgraded for Objective D Year-Round 14-3
14-4 O&M Cost per Plant Capacity for Extended Aeration (Diffuser Aeration) Plant Upgraded for Objective D Year Round 14-3
14-5 Capital Cost per Plant Capacity for CAS Plant Upgraded for Objective D Year-Round 14-5
14-6 O&M Cost per Plant Capacity for CAS Plant Upgraded for Objective D Year-Round 14-6
14-7 Capital Cost per Plant Capacity for SBR Plant Upgraded for Objective D Year-Round 14-7
14-8 O&M Cost per Plant Capacity for SBR Plant Upgraded for Objective D Year-Round 14-8
14-9 Capital Cost per Plant Capacity for Trickling Filter Plant Upgraded for Objective D Year-Round 14-10
14-10 O&M Cost per Plant Capacity for Trickling Filter Plant Upgraded for Objective D Year-Round 14-10

14-11 Capital Cost per Plant Capacity for Trickling Filter/Solids Contact Plant Upgraded for Objective D Year-Round 14-11
14-12 O&M Cost per Plant Capacity for Trickling Filter/Solids Contact Plant Upgraded for Objective D Year-Round 14-11
14-13 Capital Cost per Plant Capacity for RBC Upgraded for Objective D Year-Round 14-12
14-14 O&M Cost per Plant Capacity for RBC Plant Upgraded for Objective D Year-Round 14-12
14-15 Capital Cost per Plant Capacity for MBR Plant Upgraded for Objective D Year-Round 14-14
14-16 O&M Cost per Plant Capacity for MBR Plant Upgraded for Objective D Year-Round 14-15
14-17 Capital Cost per Plant Capacity for Aerated Lagoon Plant Upgraded for Objective D Year-Round 14-17
14-18 O&M Cost per Plant Capacity for Aerated Lagoon Plant Upgraded for Objective D Year-Round 14-17
14-19 Capital Cost per Plant Capacity for Facultative Lagoon Plant Upgraded for Objective D Year-Round 14-18
14-20 O&M Cost per Plant Capacity for Facultative Lagoon Plant Upgraded for Objective D Year-Round 14-18
14-21 Capital Cost per Plant Capacity for Extended Aeration (Mechanical Aeration) Plant Upgraded for Objective D Seasonally..... 14-21
14-22 O&M Cost per Plant Capacity for Extended Aeration (Mechanical Aeration) Plant Upgraded for Objective D Seasonal..... 14-21
14-23 Capital Cost per Plant Capacity for Extended Aeration (Diffuser Aeration) Plant Upgraded for Objective D Seasonally..... 14-22
14-24 O&M Cost per Plant Capacity for Extended Aeration (Diffuser Aeration) Plant Upgraded for Objective D Seasonal..... 14-22
14-25 Capital Cost per Plant Capacity for CAS Plant Upgraded for Objective D Seasonally..... 14-24
14-26 O&M Cost per Plant Capacity for CAS Plant Upgraded for Objective D Seasonal..... 14-25
14-27 Capital Cost per Plant Capacity for SBR Plant Upgraded for Objective D Seasonally 14-26
14-28 O&M Cost per Plant Capacity for SBR Plant Upgraded for Objective D Seasonal 14-27
14-29 Capital Cost per Plant Capacity for Trickling Filter Plant Upgraded for Objective D Seasonally..... 14-29
14-30 O&M Cost per Plant Capacity for Trickling Filter Plant Upgraded for Objective D Seasonal..... 14-29
14-31 Capital Cost per Plant Capacity for Trickling Filter/Solids Contact Plant Upgraded for Objective D Seasonally..... 14-30
14-32 O&M Cost per Plant Capacity for Trickling Filter/Solids Contact Plant Upgraded for Objective D Seasonal..... 14-30
14-33 Capital Cost per Plant Capacity for RBC Plant Upgraded for Objective D Seasonally 14-31
14-34 O&M Cost per Plant Capacity for RBC Plant Upgraded for Objective D Seasonal..... 14-31
14-35 Capital Cost per Plant Capacity for MBR Plant Upgraded for Objective D Seasonally..... 14-33
14-36 O&M Cost per Plant Capacity for MBR Plant Upgraded for Objective D Seasonal..... 14-34
14-37 Capital Cost per Plant Capacity for Aerated Lagoon Plant Upgraded for Objective D Seasonally..... 14-36
14-38 O&M Cost per Plant Capacity for Aerated Lagoon Plant Upgraded for Objective D Seasonal..... 14-36
14-39 Capital Cost per Plant Capacity for Facultative Lagoon Plant Upgraded for Objective D Seasonally..... 14-37
14-40 O&M Cost per Plant Capacity for Facultative Lagoon Plant Upgraded for Objective D Seasonal..... 14-37

15-1 Capital Cost per Plant Capacity for Extended Aeration (Mechanical Aeration) Plant Upgraded for Objective E Year-Round..... 15-2

15-2 O&M Cost per Plant Capacity for Extended Aeration (Mechanical Aeration) Plant Upgraded for Objective E Year Round 15-2
15-3 Capital Cost per Plant Capacity for Extended Aeration (Diffuser Aeration) Plant Upgraded for Objective E Year-Round 15-3
15-4 O&M Cost per Plant Capacity for Extended Aeration (Diffuser Aeration) Plant Upgraded for Objective E Year Round 15-3
15-5 Capital Cost per Plant Capacity for CAS Plant Upgraded for Objective E Year-Round 15-5
15-6 O&M Cost per Plant Capacity for CAS Plant Upgraded for Objective E Year-Round 15-6
15-7 Capital Cost per Plant Capacity for SBR Plant Upgraded for Objective E Year-Round 15-7
15-8 O&M Cost per Plant Capacity for SBR Plant Upgraded for Objective E Year-Round 15-8
15-9 Capital Cost per Plant Capacity for Trickling Filter Plant Upgraded for Objective E Year-Round 15-10
15-10 O&M Cost per Plant Capacity for Trickling Filter Plant Upgraded for Objective E Year-Round 15-10
15-11 Capital Cost per Plant Capacity for Trickling Filter/Solids Contact Plant Upgraded for Objective E Year-Round 15-11
15-12 O&M Cost per Plant Capacity for Trickling Filter/Solids Contact Plant Upgraded for Objective E Year-Round 15-11
15-13 Capital Cost per Plant Capacity for RBC Upgraded for Objective E Year-Round 15-12
15-14 O&M Cost per Plant Capacity for RBC Plant Upgraded for Objective E Year-Round 15-12
15-15 Capital Cost per Plant Capacity for MBR Plant Upgraded for Objective E Year-Round 15-15
15-16 O&M Cost per Plant Capacity for MBR Plant Upgraded for Objective E Year-Round 15-16
15-17 Capital Cost per Plant Capacity for Aerated Lagoon Plant Upgraded for Objective E Year-Round 15-18
15-18 O&M Cost per Plant Capacity for Aerated Lagoon Plant Upgraded for Objective E Year-Round 15-18
15-19 Capital Cost per Plant Capacity for Facultative Lagoon Plant Upgraded for Objective E Year-Round 15-19
15-20 O&M Cost per Plant Capacity for Facultative Lagoon Plant Upgraded for Objective E Year-Round 15-19
15-21 Capital Cost per Plant Capacity for Extended Aeration (Mechanical Aeration) Plant Upgraded for Objective E Seasonally 15-22
15-22 O&M Cost per Plant Capacity for Extended Aeration (Mechanical Aeration) Plant Upgraded for Objective E Seasonal 15-22
15-23 Capital Cost per Plant Capacity for Extended Aeration (Diffuser Aeration) Plant Upgraded for Objective E Seasonally 15-23
15-24 O&M Cost per Plant Capacity for Extended Aeration (Diffuser Aeration) Plant Upgraded for Objective E Seasonal 15-23
15-25 Capital Cost per Plant Capacity for CAS Plant Upgraded for Objective E Seasonally 15-25
15-26 O&M Cost per Plant Capacity for CAS Plant Upgraded for Objective E Seasonal 15-26
15-27 Capital Cost per Plant Capacity for SBR Plant Upgraded for Objective E Seasonally 15-27
15-28 O&M Cost per Plant Capacity for SBR Plant Upgraded for Objective E Seasonal 15-28
15-29 Capital Cost per Plant Capacity for Trickling Filter Plant Upgraded for Objective E Seasonally 15-30
15-30 O&M Cost per Plant Capacity for Trickling Filter Plant Upgraded for Objective E Seasonal 15-30
15-31 Capital Cost per Plant Capacity for Trickling Filter/Solids Contact Plant Upgraded for Objective E Seasonally 15-31
15-32 O&M Cost per Plant Capacity for Trickling Filter/Solids Contact Plant Upgraded for Objective E Seasonal 15-31
15-33 Capital Cost per Plant Capacity for RBC Plant Upgraded for Objective E Seasonally 15-32

15-34 O&M Cost per Plant Capacity for RBC Plant Upgraded for Objective E Seasonal 15-32
15-35 Capital Cost per Plant Capacity for MBR Plant Upgraded for Objective E Seasonally 15-35
15-36 O&M Cost per Plant Capacity for MBR Plant Upgraded for Objective E Seasonal 15-36
15-37 Capital Cost per Plant Capacity for Aerated Lagoon Plant Upgraded for Objective E Seasonally 15-38
15-38 O&M Cost per Plant Capacity for Aerated Lagoon Plant Upgraded for Objective E Seasonal 15-38
15-39 Capital Cost per Plant Capacity for Facultative Lagoon Plant Upgraded for Objective E Seasonally 15-39
15-40 O&M Cost per Plant Capacity for Facultative Lagoon Plant Upgraded for Objective E Seasonal 15-39

16-1 Capital Cost per Plant Capacity for Extended Aeration (Mechanical Aeration) Plant Upgraded for Objective F Year-Round 16-2
16-2 O&M Cost per Plant Capacity for Extended Aeration (Mechanical Aeration) Plant Upgraded for Objective F Year Round 16-2
16-3 Capital Cost per Plant Capacity for Extended Aeration (Diffuser Aeration) Plant Upgraded for Objective F Year-Round 16-3
16-4 O&M Cost per Plant Capacity for Extended Aeration (Diffuser Aeration) Plant Upgraded for Objective F Year Round 16-3
16-5 Capital Cost per Plant Capacity for CAS Plant Upgraded for Objective F Year-Round 16-5
16-6 O&M Cost per Plant Capacity for CAS Plant Upgraded for Objective F Year-Round 16-6
16-7 Capital Cost per Plant Capacity for SBR Plant Upgraded for Objective F Year-Round 16-7
16-8 O&M Cost per Plant Capacity for SBR Plant Upgraded for Objective F Year-Round 16-8
16-9 Capital Cost per Plant Capacity for Trickling Filter Plant Upgraded for Objective F Year-Round 16-10
16-10 O&M Cost per Plant Capacity for Trickling Filter Plant Upgraded for Objective F Year-Round 16-10
16-11 Capital Cost per Plant Capacity for Trickling Filter/Solids Contact Plant Upgraded for Objective F Year-Round 16-11
16-12 O&M Cost per Plant Capacity for Trickling Filter/Solids Contact Plant Upgraded for Objective F Year-Round 16-11
16-13 Capital Cost per Plant Capacity for RBC Upgraded for Objective F Year-Round 16-12
16-14 O&M Cost per Plant Capacity for RBC Plant Upgraded for Objective F Year-Round 16-12
16-15 Capital Cost per Plant Capacity for MBR Plant Upgraded for Objective F Year-Round 16-15
16-16 O&M Cost per Plant Capacity for MBR Plant Upgraded for Objective F Year-Round 16-16
16-17 Capital Cost per Plant Capacity for Aerated Lagoon Plant Upgraded for Objective F Year-Round 16-18
16-18 O&M Cost per Plant Capacity for Aerated Lagoon Plant Upgraded for Objective F Year-Round 16-18
16-19 Capital Cost per Plant Capacity for Facultative Lagoon Plant Upgraded for Objective F Year-Round 16-19
16-20 O&M Cost per Plant Capacity for Facultative Lagoon Plant Upgraded for Objective F Year-Round 16-19
16-21 Capital Cost per Plant Capacity for Extended Aeration (Mechanical Aeration) Plant Upgraded for Objective F Seasonally 16-22
16-22 O&M Cost per Plant Capacity for Extended Aeration (Mechanical Aeration) Plant Upgraded for Objective F Seasonal 16-22
16-23 Capital Cost per Plant Capacity for Extended Aeration (Diffuser Aeration) Plant Upgraded for Objective F Seasonally 16-23

16-24 O&M Cost per Plant Capacity for Extended Aeration (Diffuser Aeration) Plant Upgraded for Objective F Seasonal 16-23
16-25 Capital Cost per Plant Capacity for CAS Plant Upgraded for Objective F Seasonally 16-25
16-26 O&M Cost per Plant Capacity for CAS Plant Upgraded for Objective F Seasonal 16-26
16-27 Capital Cost per Plant Capacity for SBR Plant Upgraded for Objective F Seasonally..... 16-27
16-28 O&M Cost per Plant Capacity for SBR Plant Upgraded for Objective F Seasonal..... 16-28
16-29 Capital Cost per Plant Capacity for Trickling Filter Plant Upgraded for Objective F Seasonally 16-30
16-30 O&M Cost per Plant Capacity for Trickling Filter Plant Upgraded for Objective F Seasonal 16-30
16-31 Capital Cost per Plant Capacity for Trickling Filter/Solids Contact Plant Upgraded for Objective F Seasonally 16-31
16-32 O&M Cost per Plant Capacity for Trickling Filter/Solids Contact Plant Upgraded for Objective F Seasonal 16-31
16-33 Capital Cost per Plant Capacity for RBC Plant Upgraded for Objective F Seasonally 16-32
16-34 O&M Cost per Plant Capacity for RBC Plant Upgraded for Objective F Seasonal 16-32
16-35 Capital Cost per Plant Capacity for MBR Plant Upgraded for Objective F Seasonally 16-35
16-36 O&M Cost per Plant Capacity for MBR Plant Upgraded for Objective F Seasonal 16-36
16-37 Capital Cost per Plant Capacity for Aerated Lagoon Plant Upgraded for Objective F Seasonally 16-38
16-38 O&M Cost per Plant Capacity for Aerated Lagoon Plant Upgraded for Objective F Seasonal 16-38
16-39 Capital Cost per Plant Capacity for Facultative Lagoon Plant Upgraded for Objective F Seasonally 16-39
16-40 O&M Cost per Plant Capacity for Facultative Lagoon Plant Upgraded for Objective F Seasonal 16-39

17-1 Water Resource Inventory Areas in Washington..... 17-6

18-1 Capital Costs Year-Round Reclaimed Water Upgrades for Non-Membrane Plants..... 18-4
18-2 Annual O&M Costs for Year-Round Reclaimed Water Upgrades for Non-Membrane Plants ... 18-5
18-3 Annualized Capital and O&M Costs for Year-Round Reclaimed Water Upgrades for Non-Membrane Plants 18-6
18-4 Capital Costs for Year-Round Reclaimed Water Upgrades for Membrane Plants 18-7
18-5 Annual O&M Costs for Year-Round Reclaimed Water Upgrades for Membrane Plants 18-8
18-6 Annualized Capital and O&M costs for Year-Round Reclaimed Water Upgrades for Membrane Plants..... 18-9
18-7 Capital Costs for Seasonal Reclaimed Water Upgrades for Non-Membrane Plants 18-17
18-8 Annual O&M Costs for Seasonal Reclaimed Water Upgrades for Non-Membrane Plants..... 18-18
18-9 Annualized Capital and O&M Costs for Seasonal Reclaimed Water Upgrades for Non-Membrane Plants 18-19
18-10 Capital Costs for Seasonal Reclaimed Water Upgrades for Membrane Plants..... 18-20
18-11 Annual O&M Costs for Seasonal Reclaimed Water Upgrades for Membrane Plants 18-21
18-12 Extended Aeration Plants..... 18-22

EXECUTIVE SUMMARY

When discharged to surface waters, the nutrients phosphorus and nitrogen can contribute to water quality problems that adversely affect fish, wildlife, aesthetics, recreation and navigation. Common water quality problems associated with high levels of these nutrients are reduced concentrations of dissolved oxygen, daily swings in pH, and algae blooms. In extreme cases, high nutrient concentrations in surface waters can even pose risks to human and animal health by contributing to the spread of toxic algae.

Studies have shown that municipal sewage treatment plants are significant contributors to these problems. This report presents an evaluation of two approaches to reducing treatment plant discharge of nutrients to surface water:

- Improving treatment processes to remove more nitrogen or phosphorus and thus reduce their concentration in the treatment plant effluent
- Improving treatment processes to achieve effluent quality suitable for use as reclaimed water to recharge groundwater sources, rather than being discharged to surface waters.

The effectiveness and cost of various technology upgrades were evaluated for generic models of the numerous types of treatment plants used in Washington State. The results of the evaluations can be used by regulatory agencies, engineers, planners and the public to assess the likely implications of such treatment plant upgrades.

BACKGROUND

There are over 300 municipal treatment plants in Washington, using many types of treatment processes. Figure ES-1 shows the prevalent facility types, the number of plants of each type, and their cumulative capacities as a percentage of total municipal capacity in the state.

Since state and federal secondary treatment requirements were established in the 1970s, advances have been made in treatment technology that allow much greater removal of nutrients at an economical cost. Municipalities across Washington are working to evaluate the types of treatment available, the reliability and performance of different treatment options, the potential costs, and other factors associated with removing nutrients to meet surface water quality standards and with using reclaimed wastewater for groundwater recharge.

This report presents preliminary analyses for how nutrient removal and water reclamation can be achieved and roughly how much they cost. It is an early step in a public process to determine levels of nutrient removal that could be required in Washington. Significant additional work is needed before any such nutrient limits can be adopted. Information in this report must be reviewed by agencies, municipalities, the public and other stakeholders. An appropriate level of nutrient removal to apply statewide or regionally must be determined. Funding for this report came from a U.S. Environmental Protection Agency (EPA) National Estuary Grant.

EVALUATION APPROACH FOR NUTRIENT REMOVAL

Six potential nutrient-removal objectives were evaluated to determine their technical and economic impacts. These objectives represent regulatory standards that could be adopted to set limits on concentrations of total inorganic nitrogen (TIN) or total phosphorus (TP) in municipal treatment plant effluent.

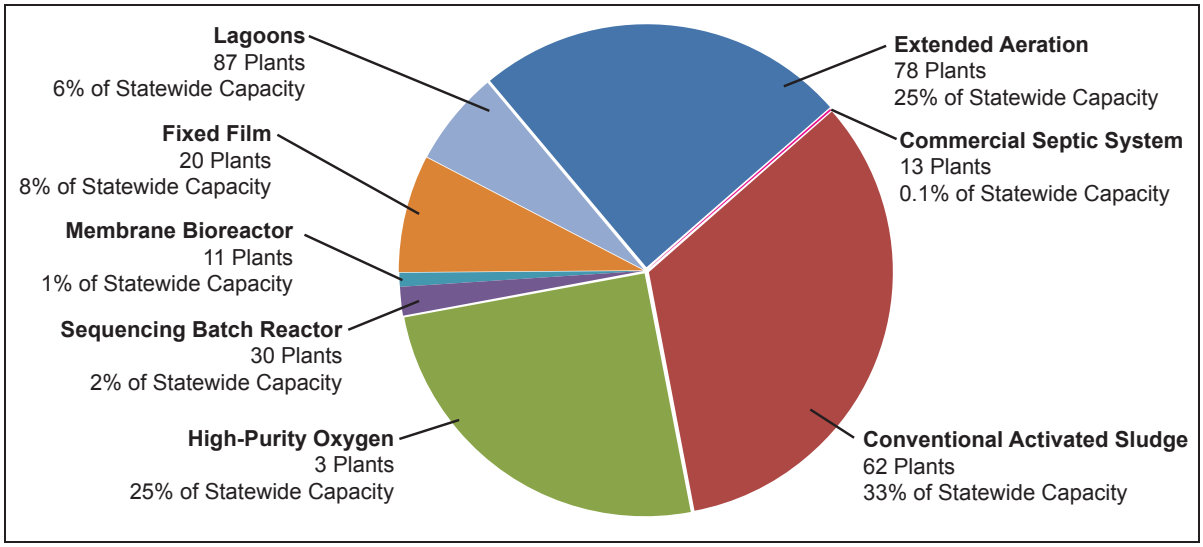

Figure ES-1. Distribution of Washington Municipal Treatment Plants by Type of Technology

The objectives evaluated, based on generally accepted performance of established nutrient removal technologies, are as follows:

- Objective A—Effluent TIN < 8 mg/L
- Objective B—Effluent TIN < 3 mg/L
- Objective C—Effluent TP < 1 mg/L
- Objective D—Effluent TP < 0.1 mg/L
- Objective E—Effluent TIN < 8 mg/L and effluent TP < 1 mg/L
- Objective F—Effluent TIN < 3 mg/L and effluent TP < 0.1 mg/L.

For each objective, analyses were performed of the improvements needed to achieve the objective year-round or to achieve it only during the dry season, when warm weather and low flows in receiving waters present the greatest risk of nutrients in effluent contributing to algae problems. The year-round and dry-season-only conditions represent the most and least expensive approaches to achieving each objective. The evaluations were performed for each of the main types of municipal treatment plant currently used in Washington. It was assumed that the technologies used to achieve the nutrient removal objectives for each type of treatment plant would be as shown in Table ES-1.

The analyses were performed for generic, typical existing plants with assumed representative wastewater characteristics and design criteria. Three sizes of plant capacity were assessed for each plant type, representing the range of sizes of plants of that type in Washington. The following parameters were calculated for each objective for each type of existing treatment plant:

- **Recycled loads**—Recycled loads are the quantities of nutrients in sludge that has gone through initial treatment at the treatment plant and is returned to the head of the plant for additional treatment. Plants with significant recycled loads require larger treatment units to achieve treatment objectives, which affects capital cost for the upgrades. Estimates of recycled loads also help point out potential drawbacks to proposed upgrades. For example, in the analyses of objectives that target only nitrogen removal, the recycled load estimates for some types of treatment plant showed that the nitrogen reduction would be accompanied by an increase in phosphorus in the plant effluent.

TABLE ES-1.
TREATMENT PROCESS UPGRADES EVALUATED TO ACHIEVE NUTRIENT-REMOVAL OBJECTIVES

	Objective A	Objective B	Objective C	Objective D	Objective E	Objective F
Definition of Objective						
Effluent TIN	< 8 mg/L	< 3 mg/L	—	—	< 8 mg/L	< 3 mg/L
Effluent TP	—	—	< 1 mg/L	< 0.1 mg/L	< 1 mg/L	< 0.1 mg/L
	Treatment Processes to Achieve Objective					
Existing Extended Aeration Plant						
Year-Round	MLE	4BDP+M	C	C+F	MLE+C	4BDP+M+C+F
Seasonal	MLE	4BDP+M	C	C+F	MLE+C	4BDP+M+C+F
Existing Conventional Activated Sludge Plant						
Year-Round	MLE+MBR	4BDP+MBR+M	C	C+F	MLE+MBR+C	4BDP+MBR+M+C
Seasonal	MLE	4BDP+M	C	C+F	MLE+C	4BDP+M+C+F
Existing Sequencing Batch Reactor Plant						
Year-Round	SBR	SBR+DNF+M	SBR+C	SBR+C+F	SBR+C	SBR+DNF+C+F+M
Seasonal	SBR	SBR+DNF+M	SBR+C	SBR+C+F	SBR+C	SBR+DNF+C+F+M
Existing Trickling Filter, Trickling Filter/Solids Contact, or Rotating Biological Contactor Plant						
Year-Round	MLE+MBR	4BDP+MBR+M	C	C+F	MLE+MBR+C	4BDP+MBR+M+C
Seasonal	MLE	4BDP+M	C	C+F	MLE+C	4BDP+M+C+F
Existing Membrane Bioreactor Plant						
Year-Round	OC	M	C	C	C	C+M
Seasonal	OC	M	C	C	C	C+M
Existing High-Purity Oxygen Activated Sludge Plant						
Year-Round	MLE+MBR	4BDP+MBR	—	—	—	—
Seasonal	MLE	4BDP+M	—	—	—	—
Existing Aerated Lagoon or Facultative Lagoon Plant						
Year-Round	MLE	4BDP+M	C	C+F	MLE+C	4BDP+M+C+F
Seasonal	MLE	4BDP+M	C	C+F	MLE+C	4BDP+M+C+F

4BDP = Four-stage Bardenpho system for denitrification
C = Chemical addition: alum for phosphorous removal, magnesium hydroxide for pH control
DNF = Denitrification filters
F = Tertiary filters for phosphorus removal
M = Methanol addition for denitrification
MBR = Membrane bioreactors for denitrification
MLE = Modified Ludzack Ettinger process for denitrification
OC = Operational changes only
SBR = Sequencing batch reactor (capacity increased for denitrification)

- **Sludge production**—Sludge is a treatment plant byproduct that ultimately must be disposed of in one way or another. The amount of sludge produced at the plant therefore represents an ongoing operation cost associated with its disposal. The cost associated with disposing of more sludge, or the savings associated with disposing of less sludge, must be accounted for in the estimated cost of nutrient-removal upgrades.
- **Energy consumption**—Energy consumption represents an ongoing cost of plant operation, so any change in energy consumption associated with a nutrient-removal upgrade must be accounted for in assessing the cost of that upgrade. Energy consumption also correlates with the generation of greenhouse gases, so estimates of changes in energy consumption provide a qualitative indication of potential environmental impact or benefit.
- **Chemical usage**—Chemical usage represents an ongoing cost of plant operation, so any change in chemical usage associated with a nutrient-removal upgrade must be accounted for in assessing the cost of that upgrade.
- **Footprint requirements**—Footprint requirement is the area of ground that would be covered by any new structures that must be built as part of a nutrient-removal upgrade. Increases or decreases in overall treatment plant footprint were estimated to provide a general sense of how easily a nutrient-removal upgrade could fit within the limits of the existing treatment plant. At plants where land is already available to expand the overall plant area without property acquisition costs, it may be more effective to implement treatment technologies that require more footprint but cost less than those evaluated in this report.

EVALUATION APPROACH FOR WATER RECLAMATION

The State of Washington at Chapter 90 Article 90.46 of the Revised Code of Washington (90.46 RCW) defines reclaimed water as "effluent derived in any part from wastewater with a domestic wastewater component that has been adequately and reliably treated, so that it can be used for beneficial purposes. Reclaimed water is not considered a wastewater." State standards define four classes of reclaimed water (A, B, C and D).

The evaluation of water reclamation for this report is based on the standards for Class A reclaimed water suitable for groundwater recharge by surface percolation. Cost estimates were developed for producing Class A reclaimed water year-round and seasonally for each type of existing plant for the same capacity ranges evaluated in the nutrient-removal assessment. To achieve this standard, the following upgrades to existing treatment plants were assumed:

- Upgrades previously described to achieve nutrient-removal Objective A (TIN < 8 mg/L)
- Upgrade or replacement of the disinfection process to a UV process that reliably achieves Class A standards
- A post-chlorination process using bulk-delivered sodium hypochlorite to maintain a minimum chlorine residual of 0.5 mg/L to the point of application of the water for recharge
- A new filtration process with coagulation/flocculation (only for upgraded plants that would not include membrane bioreactors)

In many circumstances it may be possible to eliminate the need for a post disinfection system for the conveyance of the reclaimed water, however this needs to be evaluated and approved on a case by case basis. Individual cost curves were develop for replacing existing chlorination systems with UV disinfection, post-chlorination, filtration, as well as for nitrogen removal to provide a cost estimating tool that can be easily adapted to develop cost for process needs requiring one, two, three or all four of the processes. The evaluation assumed that each plant's existing method for wastewater disposal will be

retained as a backup should the effluent fail to meet Class A reclaimed water requirements; therefore no capital costs or operational costs were developed for standby or redundant process equipment.

SUMMARY OF COST FINDINGS

Nutrient Removal

The initial results of the nutrient removal evaluation were cost curves showing estimated capital and operation and maintenance (O&M) costs by plant capacity for each objective for each type of existing treatment plant. These estimates, based on evaluations of generic treatment plants, were then applied to the list of actual existing treatment plants in Washington to estimate the aggregate costs for achieving each of the identified nutrient-removal objectives. The following costs were estimated using this approach:

- Capital, O&M and combined annual costs for upgrading all treatment plants in Washington to achieve each objective, year-round and seasonally.
- Average statewide household sewer rate increases associated with upgrading each type of treatment plant in Washington to achieve each objective, year-round and seasonally.
- Capital and O&M costs for upgrading all treatment plants in each of Washington's 62 Water Resource Inventory Areas (WRIAs) to achieve each objective, year-round and seasonally. This allows an assessment of costs associated with addressing nutrient-related water quality problems in a specific watershed.

Tables ES-2 through ES-4 summarize the key results of the cost analysis. The accuracy of the estimated costs and rate impacts is in the range of -50 percent to +100 percent, consistent with a Class 5 Planning Estimate as defined by the Association for the Advancement of Cost Engineering.

Water Reclamation

Costs associated with upgrading treatment plants to achieve Class A reclaimed water standards were compared to the costs of upgrading the plants to achieve nutrient-removal Objective A (TIN < 8 mg/L). Objective A was selected because it would meet a new rule being considered by the state that would set a limit of 10 mg/L of TIN for Class A reclaimed water for groundwater discharge. In some circumstances the level of nitrogen removal may need to greater in order to protect exceptional quality groundwater resources in order to achieve compliance with Federal and State antidegradation regulations. Incremental upgrade costs beyond that represent the cost to meet other elements of the Class A standard. These incremental costs were estimated for three plant capacities for each type of wastewater treatment plant. Table ES-5 summarizes the range of cost increments over the capacities evaluated for each type of plant.

CONCLUSIONS

Nitrogen Removal

For nitrogen removal, seasonal operation is slightly more cost-effective (per pound of nitrogen removed) than year-round operation. Year-round removal requires significantly more capital investment to upgrade treatment facilities. However, seasonal removal generally would provide only about 60 percent of the nitrogen removal provided by year-round removal, on an annual mass basis.

Implementing nitrogen removal generally would slightly reduce the amount of sludge produced at a treatment plant (up to 3 percent). Reducing nitrogen to 3 mg/L, however, generally requires the addition of a carbon substrate, which would produce additional sludge—up to 5 percent above existing rates.

Energy consumption for nitrogen removal would be significant. Reducing the TIN effluent concentration statewide to less than 8 mg/L would require approximately two to three times the amount of electrical energy currently used by municipal wastewater treatment facilities. Moreover, existing energy recovery processes at treatment facilities that rely on the production of methane gas from sludge would produce approximately 5 to 10 percent less energy as a consequence of the removal of nitrogen.

Phosphorus Removal

For phosphorus removal, seasonal removal is generally less cost-effective (per pound of phosphorus removed) than year-round removal. Both approaches require about the same capital investment to upgrade treatment facilities, but seasonal removal generally would provide only about 60 percent of the phosphorus removal provided by year-round removal, on an annual mass basis.

Phosphorus removal by chemical precipitation produces significantly more sludge than existing processes—approximately 25 to 35 percent more.

Energy consumption would increase for phosphorus removal, but significantly less than for nitrogen removal. Reducing the TP effluent concentration statewide to less than 1 mg/L would increase treatment plant electrical energy consumption by approximately 15 to 20 percent.

TABLE ES-2.
ESTIMATED ANNUAL CAPITAL AND O&M COSTS FOR NUTRIENT REMOVAL UPGRADES OF ALL TREATMENT PLANTS IN WASHINGTON

	Estimated Annual Cost ($ millions, 2010)[1]					
Existing Plant Type	Obj. A	Obj. B	Obj. C	Obj. D	Obj. E	Obj. F
Year-Round Nutrient Removal						
Extended Aeration (Mechanical Aeration)	14	29	11	23	31	50
Extended Aeration (Diffused Aeration)	0	0	1	1	1	2
Extended Aeration (with Biological Nutrient Removal)	2	9	21	55	17	66
Conventional Activated Sludge	154	176	64	106	206	273
Sequencing Batch Reactor	1	11	2	7	1	17
Trickling Filter	17	20	6	10	22	29
Rotating Biological Contactor	14	16	4	8	18	24
Trickling Filter/Solids Contact	17	19	7	11	22	29
Membrane Bioreactor	0	0	2	2	2	2
Lagoons (Aerated)	75	81	21	27	87	100
Lagoons (Facultative)	19	21	5	7	22	26
High Purity Oxygen	108	129	N/A	N/A	108[2]	129[2]
Statewide Total	**$421**	**$513**	**$143**	**$256**	**$537**	**$748**
Dry-Season-Only Nutrient Removal						
Extended Aeration (Mechanical Aeration)	21	27	8	14	30	42
Extended Aeration (Diffused Aeration)	0	0	1	1	1	2
Extended Aeration (with Biological Nutrient Removal)	3	5	15	36	15	47
Conventional Activated Sludge	55	66	53	78	98	141
Sequencing Batch Reactor	0	10	2	5	2	14
Trickling Filter	9	11	5	7	13	18
Rotating Biological Contactor	8	9	4	6	12	15
Trickling Filter/Solids Contact	7	8	5	8	10	15
Membrane Bioreactor	0	0	2	2	2	2
Lagoons (Aerated)	75	81	21	27	87	100
Lagoons (Facultative)	18	19	4	6	21	23
High Purity Oxygen	51	64	N/A	N/A	51[2]	64[2]
Statewide Total	**$248**	**$300**	**$120**	**$190**	**$344**	**$483**

Notes: [1] Capital cost were annualized for 20 years at 3% discount rate

[2] Cost is for nitrogen removal only

TABLE ES-3.
ESTIMATED MONTHLY HOUSEHOLD SEWER RATE INCREASE FOR NUTRIENT REMOVAL UPGRADES OF ALL TREATMENT PLANTS IN WASHINGTON

	Estimated Monthly Household Sewer Rate Increase [1]					
Existing Plant Type	Obj. A	Obj. B	Obj. C	Obj. D	Obj. E	Obj. F
Year-Round Nutrient Removal						
Extended Aeration (Mechanical Aeration)	$11.29	$24.30	$9.26	$18.96	$25.20	$41.13
Extended Aeration (Diffused Aeration)	$4.09	$7.01	$9.91	$22.18	$15.29	$36.23
Extended Aeration (with Biological Nutrient Removal)	$0.37	$1.66	$4.07	$10.50	$3.31	$12.68
Conventional Activated Sludge	$17.48	$19.95	$7.25	$12.03	$23.33	$30.97
Sequencing Batch Reactor	$1.16	$22.37	$4.71	$13.09	$2.45	$33.21
Trickling Filter	$27.43	$31.48	$8.85	$15.26	$35.23	$46.42
Rotating Biological Contactor	$29.77	$34.14	$9.24	$15.92	$38.27	$49.99
Trickling Filter/Solids Contact	$17.79	$20.08	$6.86	$11.38	$22.33	$30.00
Membrane Bioreactor	$0.00	$0.81	$9.46	$10.67	$9.46	$11.46
Lagoons (Aerated)	$57.67	$62.05	$15.87	$20.91	$66.71	$76.37
Lagoons (Facultative)	$66.89	$74.14	$16.43	$23.38	$78.62	$94.66
High Purity Oxygen	$16.24	$19.47	N/A	N/A	$16.24	$19.47
Weighted Average	**$16.00**	**$19.48**	**$7.29**	**$13.02**	**$20.40**	**$28.43**
Dry-Season-Only Nutrient Removal						
Extended Aeration (Mechanical Aeration)	$17.71	$22.12	$6.25	$11.73	$24.88	$34.67
Extended Aeration (Diffused Aeration)	$2.34	$4.73	$8.45	$14.66	$15.55	$28.56
Extended Aeration (with Biological Nutrient Removal)	$0.48	$0.98	$2.96	$6.98	$2.97	$8.99
Conventional Activated Sludge	$6.23	$7.46	$6.01	$8.78	$11.15	$16.02
Sequencing Batch Reactor	$0.83	$18.88	$4.54	$10.35	$4.68	$27.51
Trickling Filter	$14.74	$17.01	$7.69	$11.32	$21.47	$28.34
Rotating Biological Contactor	$16.93	$19.46	$8.06	$11.80	$24.21	$31.42
Trickling Filter/Solids Contact	$7.20	$8.19	$5.66	$8.37	$10.84	$15.53
Membrane Bioreactor	$0.00	$0.66	$8.60	$8.77	$8.60	$9.39
Lagoons (Aerated)	$57.67	$62.05	$15.87	$20.91	$66.71	$76.37
Lagoons (Facultative)	$64.37	$68.74	$14.66	$19.74	$73.51	$83.15
High Purity Oxygen	$7.68	$9.70	N/A	N/A	$7.69[2]	$9.70[2]
Weighted Average	**$9.43**	**$11.41**	**$6.08**	**$9.64**	**$13.05**	**$23.28**

Assumptions:
- Maximum-month wastewater flow per capita = 160 gallons
- Population served by treatment plants = 5,484,396
- 2.5 persons per household
- Existing households = 75% of households at design capacity

Notes [1] Capital cost were annualized for 20 years at 3% discount rate
[2] Cost is for nitrogen removal only

TABLE ES-4.
ESTIMATED CAPITAL AND O&M COSTS BY WRIA FOR YEAR-ROUND NUTRIENT REMOVAL

	Cost ($ millions, 2010)											
	Objective A		Objective B		Objective C		Objective D		Objective E		Objective F	
	Capital	O&M	Capital	O&M	Capital	O&M	Capital	O&M	Capital	O&M	Capital	O&M
WRIA 1	236.4	7.1	260.5	9.8	28.1	3.4	61.1	4.6	248.8	10.9	306.5	14.4
WRIA 2	6.9	0.3	8.6	0.8	2.4	0.2	5.3	0.3	8.2	0.5	12.6	1.1
WRIA 3	63.2	1.7	76.8	2.9	14.1	3.7	53.0	5.5	72.0	5.2	123.2	8.7
WRIA 4	127.7	3.4	155.3	5.8	29.0	7.6	107.4	11.2	146.2	10.6	249.5	17.6
WRIA 5	10.5	0.2	13.5	1.3	2.9	0.4	9.5	0.7	12.2	0.8	21.7	2.0
WRIA 6	42.2	1.6	46.7	2.6	10.0	0.6	17.5	0.8	46.5	2.5	58.5	3.5
WRIA 7	365.7	7.3	388.2	11.0	54.0	8.6	129.0	11.2	383.8	15.7	482.9	21.7
WRIA 8	1235.6	45.4	1408.5	54.6	40.4	19.8	167.5	25.0	1253.4	61.1	1538.3	78.0
WRIA 9	227.8	6.7	249.7	8.4	19.2	6.2	74.0	7.7	238.4	12.6	313.5	16.5
WRIA 10	481.5	17.1	548.3	21.2	29.0	10.1	111.0	13.4	495.8	25.7	638.6	35.1
WRIA 11	7.3	0.3	9.9	1.2	2.7	0.3	7.1	0.4	9.1	0.5	16.0	1.5
WRIA 12	117.6	3.2	127.6	4.0	9.5	4.0	38.3	5.0	124.1	6.4	160.1	8.7
WRIA 13	0.3	0.0	22.6	0.6	14.2	3.1	43.2	5.1	20.9	2.3	58.2	6.1
WRIA 14	14.8	0.0	18.2	1.2	3.2	0.8	11.3	1.1	16.8	1.1	28.4	2.3
WRIA 15	98.7	2.9	112.2	4.2	14.3	3.9	47.7	5.0	110.8	6.6	155.9	9.2
WRIA 17	12.1	0.2	14.3	0.7	1.9	0.5	7.4	0.7	13.6	0.9	21.2	1.4
WRIA 18	39.8	0.9	44.6	1.6	4.2	1.2	15.8	1.6	42.1	2.1	58.3	3.0
WRIA 19	5.5	0.3	6.1	0.4	0.9	0.1	1.9	0.1	6.2	0.4	7.6	0.4
WRIA 20	15.0	0.6	15.7	0.7	2.9	0.2	4.1	0.3	16.3	0.8	18.0	0.9
WRIA 21	1.6	0.0	1.9	0.2	0.6	0.1	1.5	0.1	2.1	0.2	3.3	0.3
WRIA 22	78.1	1.6	89.6	3.8	9.7	2.9	38.9	4.0	85.6	5.0	125.3	7.7
WRIA 23	5.1	0.0	15.8	1.7	11.3	2.0	43.6	3.9	9.8	2.1	52.6	6.1
WRIA 24	42.8	1.9	47.0	2.8	10.0	0.7	18.4	0.9	47.3	2.6	59.9	3.8
WRIA 25	39.2	1.6	42.1	1.9	9.2	0.4	14.2	0.5	42.4	2.2	50.4	2.7
WRIA 26	14.6	0.5	16.1	1.4	4.3	0.7	9.4	0.9	18.0	1.4	24.5	1.9
WRIA 27	4.6	0.2	8.3	1.2	3.2	0.3	11.0	0.7	6.6	0.5	18.2	1.9
WRIA 28	9.4	0.0	45.2	0.5	29.3	6.8	105.7	11.6	34.8	5.8	131.9	13.9
WRIA 29	5.7	0.0	6.8	0.5	0.9	0.2	4.0	0.4	6.2	0.5	10.5	0.8
WRIA 30	45.4	1.4	47.2	1.7	9.6	0.6	14.0	0.7	49.5	1.9	55.5	2.3
WRIA 31	100.3	1.8	101.9	2.3	22.5	0.9	33.9	1.2	107.8	2.9	122.4	3.7
WRIA 32	10.3	0.0	17.9	0.9	8.7	1.8	31.5	3.0	14.3	2.0	44.5	4.6
WRIA 34	143.2	5.2	158.8	6.8	34.8	2.6	65.4	3.6	156.9	8.5	202.9	11.3
WRIA 35	15.9	0.6	18.2	0.9	2.1	0.5	7.2	0.6	17.8	1.0	24.9	1.4

TABLE ES-4 (continued).
ESTIMATED CAPITAL AND O&M COSTS BY WRIA FOR YEAR-ROUND NUTRIENT REMOVAL

	Cost ($ millions, 2010)											
	Objective A		Objective B		Objective C		Objective D		Objective E		Objective F	
	Capital	O&M	Capital	O&M	Capital	O&M	Capital	O&M	Capital	O&M	Capital	O&M
WRIA 36	48.5	2.0	52.5	2.3	7.5	1.2	16.3	1.4	53.2	2.8	65.0	3.5
WRIA 37	197.5	5.9	217.8	8.1	22.5	5.8	72.9	7.4	213.1	10.9	280.5	15.0
WRIA 38	13.2	0.4	15.3	0.8	1.9	0.5	6.6	0.6	14.9	0.9	21.5	1.3
WRIA 39	49.6	1.6	57.0	2.9	7.4	1.5	24.7	2.2	54.7	2.8	78.3	4.9
WRIA 40	53.8	1.6	59.6	2.0	5.1	1.8	19.9	2.3	58.0	3.1	77.5	4.2
WRIA 41	83.5	2.5	89.3	3.1	17.9	1.6	34.7	2.0	91.7	4.0	114.3	5.4
WRIA 42	11.8	0.6	12.6	0.7	2.4	0.2	3.7	0.3	13.0	0.7	14.8	0.9
WRIA 43	36.5	1.5	40.3	1.8	4.9	1.0	13.0	1.3	40.0	2.2	51.1	2.8
WRIA 44	21.9	0.7	24.8	1.1	2.5	0.7	9.2	0.9	24.1	1.4	33.3	1.8
WRIA 45	55.1	1.7	60.5	2.6	9.4	1.5	21.8	1.9	61.2	3.2	78.3	4.3
WRIA 47	13.3	0.5	14.9	0.6	1.3	0.3	4.9	0.4	14.4	0.8	19.5	1.1
WRIA 48	11.1	0.4	12.5	0.7	1.9	0.3	4.9	0.4	12.4	0.7	16.5	1.0
WRIA 49	19.4	0.4	22.7	1.2	2.8	0.7	11.1	1.0	21.5	1.5	33.0	2.1
WRIA 50	10.1	0.4	10.6	0.5	2.0	0.2	2.9	0.2	11.0	0.5	12.3	0.6
WRIA 52	2.0	0.1	2.2	0.1	0.4	0.0	0.5	0.0	2.2	0.1	2.4	0.2
WRIA 53	2.6	0.2	2.8	0.2	0.5	0.1	0.6	0.1	2.9	0.2	3.1	0.2
WRIA 54	29.4	0.0	45.4	0.0	0.2	0.0	63.1	5.1	38.3	-2.8	114.7	4.5
WRIA 55	3.8	0.3	4.0	0.3	0.7	0.1	0.9	0.1	4.1	0.3	4.5	0.3
WRIA 56	53.7	1.9	57.0	2.7	10.0	1.2	18.5	1.5	58.3	3.0	69.6	3.8
WRIA 60	0.8	0.1	0.9	0.1	0.1	0.0	0.2	0.0	0.9	0.1	1.0	0.1
WRIA 61	2.0	0.1	2.2	0.1	0.4	0.0	0.5	0.0	2.2	0.1	2.4	0.2
WRIA 62	17.4	0.8	20.0	1.0	5.1	0.6	11.0	0.8	19.9	1.3	27.9	1.9

TABLE ES-5.
ESTIMATED CAPITAL AND O&M COSTS BY WRIA FOR DRY-SEASON NUTRIENT REMOVAL

	Cost ($ millions, 2010)											
	Objective A		Objective B		Objective C		Objective D		Objective E		Objective F	
	Capital	O&M	Capital	O&M	Capital	O&M	Capital	O&M	Capital	O&M	Capital	O&M
WRIA 1	160.6	5.7	177.7	7.4	28.3	2.6	51.2	3.4	174.3	8.5	215.5	11.1
WRIA 2	6.6	0.3	8.1	0.7	2.4	0.2	4.3	0.3	8.3	0.5	11.6	1.0
WRIA 3	27.5	1.3	35.5	1.8	15.2	2.7	38.7	3.7	38.0	3.9	70.0	5.9
WRIA 4	55.3	2.6	71.5	3.6	31.2	5.4	78.4	7.4	77.1	7.9	141.7	12.0
WRIA 5	10.1	0.5	12.6	1.2	2.8	0.3	7.3	0.5	12.3	0.8	19.2	1.6
WRIA 6	38.1	1.7	40.4	2.3	9.0	0.5	13.6	0.7	42.4	2.2	49.5	2.9
WRIA 7	253.6	5.1	264.8	7.0	58.9	6.6	108.7	8.3	273.2	11.4	343.8	15.4
WRIA 8	477.6	22.8	564.0	28.2	59.6	13.7	139.6	16.6	497.7	35.1	694.0	44.5
WRIA 9	113.5	3.2	124.1	4.2	23.7	4.8	54.6	5.7	122.0	8.4	169.0	10.8
WRIA 10	182.2	8.3	220.7	10.9	37.2	7.3	86.8	9.2	200.1	15.5	299.1	21.1
WRIA 11	5.1	0.3	7.3	1.0	2.7	0.3	5.9	0.4	6.9	0.5	12.3	1.3
WRIA 12	41.1	1.0	45.3	1.4	13.1	2.9	30.3	3.5	47.6	3.7	73.8	5.0
WRIA 13	0.3	0.0	5.0	0.6	14.3	2.0	35.6	3.1	8.0	1.8	33.3	4.0
WRIA 14	13.5	0.4	16.1	1.1	3.1	0.5	8.0	0.7	16.6	1.0	24.1	1.9
WRIA 15	35.0	1.7	42.8	2.3	15.8	3.1	33.7	3.7	47.1	4.6	75.2	6.2
WRIA 17	8.6	0.4	10.1	0.6	1.9	0.4	4.8	0.5	10.6	0.8	15.1	1.2
WRIA 18	19.0	0.5	21.6	0.8	5.0	0.9	11.3	1.2	21.3	1.4	31.2	2.0
WRIA 19	4.5	0.3	5.0	0.4	0.9	0.1	1.5	0.1	5.1	0.4	6.1	0.4
WRIA 20	15.0	0.6	15.7	0.7	2.9	0.2	4.1	0.3	16.3	0.8	18.0	0.9
WRIA 21	1.4	0.2	1.7	0.2	0.6	0.1	1.0	0.1	2.1	0.2	2.8	0.2
WRIA 22	40.9	1.5	48.0	2.6	10.6	2.2	27.2	2.8	49.8	3.8	74.7	5.5
WRIA 23	4.6	0.3	12.4	1.3	11.3	1.4	32.7	2.4	12.3	1.7	40.7	4.3
WRIA 24	37.6	1.8	40.6	2.6	9.2	0.6	14.8	0.8	42.1	2.4	50.5	3.3
WRIA 25	37.8	1.5	38.9	1.7	8.1	0.4	11.6	0.5	40.9	1.9	45.6	2.2
WRIA 26	12.4	1.1	14.0	1.2	4.2	0.6	6.7	0.7	16.5	1.5	20.4	1.8
WRIA 27	1.8	0.1	4.9	1.0	3.1	0.3	8.3	0.5	4.2	0.4	12.5	1.5
WRIA 28	8.1	0.3	20.9	0.5	29.8	4.2	81.3	6.9	25.6	4.6	87.6	9.1
WRIA 29	5.2	0.4	6.0	0.5	0.9	0.2	2.4	0.2	6.4	0.5	8.8	0.7
WRIA 30	44.7	1.4	46.5	1.7	9.6	0.6	13.8	0.7	48.8	1.9	54.5	2.3
WRIA 31	98.3	1.8	99.8	2.3	22.5	0.9	33.3	1.2	105.8	2.9	119.6	3.7
WRIA 32	9.8	0.3	15.2	0.8	8.8	1.2	22.8	1.9	16.8	1.7	35.6	3.4
WRIA 34	132.7	5.3	139.9	6.2	31.0	2.2	50.7	2.8	147.4	7.4	174.4	9.3
WRIA 35	6.4	0.5	7.8	0.6	2.3	0.4	4.9	0.5	8.1	0.8	12.3	1.0

TABLE ES-5 (continued).
ESTIMATED CAPITAL AND O&M COSTS BY WRIA FOR DRY-SEASON NUTRIENT REMOVAL

	Cost ($ millions, 2010)											
	Objective A		Objective B		Objective C		Objective D		Objective E		Objective F	
	Capital	O&M	Capital	O&M	Capital	O&M	Capital	O&M	Capital	O&M	Capital	O&M
WRIA 36	33.8	1.6	36.8	1.9	8.0	1.1	13.6	1.2	38.2	2.4	46.8	2.9
WRIA 37	92.2	3.3	103.6	4.6	26.3	4.6	56.0	5.5	106.8	7.5	152.6	10.1
WRIA 38	5.0	0.4	6.3	0.5	2.1	0.4	4.4	0.4	6.7	0.7	10.6	1.0
WRIA 39	23.5	0.9	28.4	1.9	8.3	1.3	19.5	1.6	28.3	2.0	45.4	3.4
WRIA 40	18.1	0.6	21.0	0.9	6.5	1.4	14.9	1.7	22.1	1.9	35.1	2.6
WRIA 41	70.3	2.3	75.0	2.8	18.0	1.4	29.2	1.8	79.2	3.7	95.3	4.8
WRIA 42	11.6	0.6	12.4	0.7	2.4	0.2	3.4	0.3	12.9	0.8	14.5	0.9
WRIA 43	20.4	1.1	22.8	1.3	5.4	0.9	10.2	1.0	23.7	1.7	31.2	2.2
WRIA 44	7.9	0.5	9.6	0.6	2.9	0.6	6.5	0.7	10.0	1.0	15.7	1.3
WRIA 45	35.8	1.4	39.4	1.9	10.0	1.3	17.6	1.5	42.1	2.6	53.8	3.4
WRIA 47	7.2	0.3	8.1	0.4	1.5	0.3	3.3	0.3	8.1	0.6	11.0	0.8
WRIA 48	8.8	0.5	9.8	0.6	1.9	0.3	3.6	0.3	10.2	0.7	12.8	0.9
WRIA 49	13.9	0.8	16.2	1.1	2.7	0.5	6.9	0.7	16.8	1.3	23.2	1.8
WRIA 50	10.1	0.5	10.6	0.5	2.0	0.2	2.9	0.2	11.0	0.5	12.2	0.6
WRIA 52	2.0	0.1	2.2	0.1	0.4	0.0	0.5	0.0	2.2	0.1	2.4	0.2
WRIA 53	2.6	0.2	2.8	0.2	0.5	0.1	0.6	0.1	2.9	0.2	3.1	0.2
WRIA 54	38.0	0.0	41.8	0.0	0.2	0.0	51.3	2.7	19.1	0.1	72.7	6.4
WRIA 55	3.8	0.3	4.0	0.3	0.7	0.1	0.9	0.1	4.1	0.3	4.5	0.3
WRIA 56	52.8	2.2	56.0	2.6	9.9	1.0	16.2	1.2	58.3	3.0	67.0	3.6
WRIA 60	0.8	0.1	0.9	0.1	0.1	0.0	0.2	0.0	0.9	0.1	1.0	0.1
WRIA 61	2.0	0.1	2.2	0.1	0.4	0.0	0.5	0.0	2.2	0.1	2.4	0.2
WRIA 62	16.9	0.9	19.1	1.0	5.1	0.5	8.7	0.7	20.3	1.3	25.6	1.7

TABLE ES-6.
RECLAIMED-WATER UPGRADE COST RELATIVE TO OBJECTIVE A NUTRIENT-REMOVAL UPGRADE COST

Treatment Plant Type	Reclaimed-Water Upgrade Cost as Percent of Nutrient-Removal Upgrade Cost			
	Annualized Capital Cost		Annual O&M Cost	
	Year-Round	Seasonal	Year-Round	Seasonal
Extended Aeration (Mechanical)	199 – 214	149 – 208	(417) – 1,486	180 – 681
Extended Aeration (Diffused)	886 – 1,502	600 – 1,043	(1,500) – 2,665	(698) – 1,516
Conventional Activated Sludge	88 – 103	186 – 300	64 – 125	54 – 219
Sequencing Batch Reactor	Undefined	Undefined	4,895 – 7,415	(115,891) – 41,656
Trickling Filter	71 – 90	93 – 127	51 – 126	39 – 223
Rotating Biological Contactor	71 – 89	92 – 125	43 – 117	31 – 173
Trickling Filter/Solids Contact	84 – 98	148 – 167	83 – 144	81 – 420
Membrane Bioreactor	Undefined	Undefined	Undefined	Undefined
High-Purity Oxygen	109	216 – 273	64 – 68	251 – 311
Facultative Lagoon	48 – 80	35 – 55	51 – 71	46 – 64
Aerated Lagoon	47 – 79	34 – 55	67 - 105	60 – 91

Notes:
a. Ranges indicate low and high values for the range of plant capacities evaluated
b. Negative values (in parentheses) indicate that the nutrient-removal upgrade provides a cost savings; percentage show represents the ratio of reclaimed-water upgrade cost to nutrient-removal upgrade savings
c. Undefined indicates that there is no cost or savings associated with the nutrient-removal upgrade because no changes are required to achieve the nutrient-removal objective.
d. Annualized capital cost based on 3% discount rate over 20 years.
e. Annual O&M cost includes labor, materials, chemicals and energy.

ABBREVIATIONS

^0C	Degree Celsius
4BDP	4-stage Bardenpho continuous-flow suspended-growth process with alternating anoxic/aerobic/anoxic/aerobic stages; used to remove TN
AACE	Association for the Advancement of Civil Engineering
ADWF	Average Dry Weather Flow
AL	Aerated Lagoon
Alum	Hydrated Aluminum Sulfate having an approximate molecular formula of $Al_2(SO_4)_3 \cdot 14H_2O$
AS	Activated Sludge
AWWF	Average Wet Weather Flow
BAF	Biologically Aerated Filter
BioWin	BioWin is a Microsoft Windows-based computer simulation model used for analysis and design of wastewater treatment plants distributed by EnvioSims, Ltd.
BNR	Biological Nutrient Removal
BOD	Biochemcial Oxygen Demand
BOD_5	Biochemcial Oxygen Demand (5-day)
C	Chemical Addition
$CaCO_3$	Calcium Carbonate
CapdetWorks	CapdetWorks is a preliminary design and costing program for evaluating a variety of wastewater treatment plant processes originally developed by the US Army Corps of Engineers and EPA that is updated and distributed by Hydromantis, Environmental Software Solutions, Inc.
CAS	Conventional Activated Sludge process
CBOD	Carbonaceous fraction of the Biochemical Oxygen Demand
cfm	Cubic Feet per Minute
DA	Diffused Aeration
DIN	Dissolved Inorganic Nitrogen
DNF	Denitrifying Filter
DO	Dissolved Oxygen
DOE	Washington State Department of Ecology
EA	Extended Aeration Activated sludge process
EPA	Environmental Protection Agency
F	Filtration
FF	Fixed Film process (e.g. RBC and TF)
FL	Facultative Lagoon
gpcd	Gallons per Capita per Day
gpd	Gallons per Day
HPO	High Purity Oxygen Activated Sludge process
HRT	hydraulic retention time
IFAS	Integrated Fixed Film Activated Sludge

M	Methanol Addition
MA	Mechanical Aeration
MBBR	Moving Bed Bioreactor
MBR	Membrane Bioreactor
MG	Millions of Gallons
$Mg(OH)_2$	Magnesium Hydroxide
mg/L	Milligrams per Liter
mgd	Million Gallons per Day
mg-N/L	Milligrams Nitrogen per Liter
mg-P/Liter	Milligrams Phosphorus per Liter
ML	Mixed Liquor (i.e., combination of wastewater and biological mass typically found in the aeration tank of a activated sludge plant)
MLE	Modified Ludzack-Ettinger Process – continuous-flow suspended-growth process with an initial anoxic stage followed by an aerobic stage; used to remove TN
MLSS	Mixed Liquor Suspended Solids
MMDWF	Maximum Month Dry Weather Flow
MMWWF	Maximum Month Wet Weather Flow
N	Nitrogen
NH_3	Ammonia
NH_4^+	Ammonium ion
NO_2^{-2}	Nitrite
NO_3^-	Nitrate
NPDES	National Pollutant Discharge Elimination System
O&M	Operation and Maintenance
OC	Operational Changes
POTW	Publically Owned Treatment Works
ppcd	Pounds per Capita per Day
ppd	Pounds per Day
Q	Influent Flow Rate
RAS	Return Activated Sludge
SF	Square Foot
SPT	Septic Tank on-site treatment process
SRT	Solids Retention Time
TDS	Total Dissolved Solids
TF	Tricking Filter process
TF/SC	Tricking Filter /Solids Contact process
TIN	Total Inorganic Nitrogen
TKN	Total Kjeldahl Nitrogen (i.e., ammonia nitrogen plus organic nitrogen)
TMDL	Total Maximum Daily Load
TP	Total Phosphorus
TS	Total Solids (Total Recoverable Residue). TSS plus TDS
TSS	Total Suspended Solids

UV	Ultraviolet light used for disinfection
WAS	Waste Activated Sludge
WWTP	Wastewater Treatment Plant
RBC	Rotating Biological Contactor
Poly	Polymer
Cl_2	Chlorine
WRIA	Water Resource Inventory Area
NaOCl	Sodium hypochlorite; a liquid form of chlorine that can used for disinfection of wastewater
mJ/cm2	milli-joules per square centimeter
nm	nanometer; a wave length of light that used for ultra violet light disinfection
MPN	most probable number
ERU	Equivalent Residential Unit
P	Phosphorus
N	Nitrogen
kW	kilowatt
kW-hours	kilowatt hours
VSS	Volatile Suspended Solids
PDF	Peak Daily Flow
SBR	Sequencing Batch Reactor process

CHAPTER 1. INTRODUCTION

Excessive loads of nutrients—specifically nitrogen and phosphorus—are the leading cause of water quality impairment in the United States and in the State of Washington. Impairments caused by excessive nutrients include excessive growth of algae and aquatic plants, low dissolved oxygen concentrations, fish and shellfish kills, foul odors, degraded drinking water supplies, and degraded recreational uses. The Washington Department of Ecology's 2008 Water Quality Assessment report identifies 524 Category 5 listings for the federal 303(d) list of impaired water bodies that may be attributable to excess nutrients.

The primary sources of nitrogen and phosphorus pollution are municipal wastewater, urban stormwater, agricultural (livestock and row crop) runoff, other non-point sources, and industrial wastewater. The contribution from each of these sources is dependent on the extent of development in the watershed of interest. Although nitrogen and phosphorus loads from other sources may be greater, nutrient loads from municipal wastewater treatment plants can be significant; such loads also are more manageable from a regulatory perspective.

1.1 BACKGROUND

1.1.1 National Trends

The Clean Water Act of 1972 authorized the U.S. Environmental Protection Agency (EPA) to establish standards for municipal wastewater treatment plants to restore and maintain the chemical, physical and biological integrity of the nation's waters. Minimum standards for municipal wastewater treatment plant effluent were promulgated into public law in 1973. The standards are based on the best treatment technology economically achievable, regardless of the condition of the receiving water. These standards are commonly known as the standards for secondary treatment. They were established for four conventional pollutant parameters: 5-day biochemical oxygen demand (BOD_5), total suspended solids (TSS), fecal coliform bacteria, and pH. In 1984, the EPA allowed the use of a test for 5-day carbonaceous biochemical oxygen demand ($CBOD_5$) rather than for BOD_5, thereby eliminating the effects of residual nitrogen (principally ammonia) on the BOD test.

While conventional secondary treatment reliably removes more than 90 percent of CBOD and TSS, it only removes about 10 to 15 percent of the total nitrogen (TN) contained in raw wastewater and 20 to 30 percent of the total phosphorus (TP). For some receiving waters, this level of nutrient removal has been inadequate to achieve water quality objectives. The Clean Water Act allows permitting agencies to impose more stringent effluent limits if the technology-based limits are not adequate to prevent violation of water quality standards.

Significant advances have been made in wastewater treatment technology since enactment of the secondary treatment standards. Several processes have proven to be reliable and cost-effective in removing nitrogen and phosphorus from municipal wastewater. The EPA recently published (September 2008) a comprehensive document that identifies and evaluates the performance and costs of nitrogen and phosphorus removal technologies applied to municipal wastewater treatment plants throughout the United States.

1.1.2 Washington State Trends

Pollutant loads to municipal wastewater plants are primarily driven by population—as the population grows, so does the quantity of nitrogen and phosphorus. U.S. Census Bureau data indicate that population increased 13.1 percent in the last 10 years in Washington, compared to 9 percent nationwide. In the last 50 years, the population of Washington has increased approximately 180 percent.

In 1998, the EPA published the *National Strategy for Development of Regional Nutrient Criteria*. In turn, the State of Washington promulgated numeric water standards (WAC Chapter 173-201A) for phosphorus for lakes and reservoirs and for a reach of the Spokane River, extending from Long Lake Dam to the Nine Mile Bridge. Currently there are no numeric water quality standards for nitrogen in the State of Washington.

There are about 300 municipal wastewater treatment plants operating in the State of Washington, using a wide assortment of treatment technologies—ranging from simple facultative lagoons to complex automated mechanical treatment plants. Their current conditions are estimated as follows:

- The plants range in annual average flow capacity from less than 10,000 gallons per day (gpd) to 210 million gallons per day (mgd), with a combined maximum month rated capacity of approximately 1,172 mgd.
- Assuming that all these plants are operating at 70 percent of their design capacity with respect to flows and pollutant loads characteristic of municipal wastewater, the existing plants serve an equivalent population of 5.13 million.
- Collectively, these plants are estimated to treat about 187 billion gallons of wastewater per year.
- The estimated mass of total nitrogen in effluent currently discharged by these plants is in the range of 22,000 to 26,000 tons per year. More than 90 percent of this nitrogen is in the form of inorganic nitrogen (ammonia, nitrate, and nitrite). This estimate is based on nitrogen removal efficiency of 10 to 15 percent for conventional activated sludge, fixed film systems, high purity oxygen plants, lagoons and septic tanks, and 30 percent to 50 percent for SBR, extended aeration, and membrane bioreactor plants.
- The estimated mass of total phosphorus contained in effluent currently discharged by these plants is in the range of 4,800 to 5,400 tons per year. This estimate is based on 30 percent of the extended aeration plant capacity achieving 80 percent phosphorus removal during the dry weather season and the remaining capacity of the extended aeration plants achieving 20 percent to 30 percent phosphorus removal. Existing SBR and MBR plants were estimated to have a phosphorus removal efficiency of 70 percent. All of the other treatment process category types were assume to have phosphorus removal efficiency in the range of 20 percent to 30 percent.

With a few exceptions, most municipal wastewater treatment plants in Washington only remove nitrogen and phosphorus to levels generally reported for conventional secondary treatment.

A few municipal wastewater treatment plants in Washington were designed and are operated to remove a greater percentage of nutrients than conventional secondary treatment does. Plants that produce reclaimed water for irrigation often are required to reduce TN to less than 10 milligrams per liter expressed as nitrogen (10 mg-N/L). Water-quality-based effluent limitations for nitrogen and phosphorus have been established for a few wastewater treatment plants in Washington (fewer than 10) based on total maximum daily load (TMDL) allocations.

1.2 PURPOSE OF THIS REPORT

This report evaluates the effectiveness and economics of advanced technologies to remove nitrogen and phosphorus from the discharges of existing municipal wastewater treatment facilities in Washington. It was prepared to assist municipal decision makers and regional and state regulators in planning for nutrient removal specifically from municipal wastewater treatment plants. Similar evaluations have been conducted across the nation—for Chesapeake Bay, Maryland, Pennsylvania, Virginia, Minnesota and Wisconsin—but they focused principally on phosphorus removal.

This report does not identify and evaluate all established, emerging, or innovative nutrient removal technologies. It is generally accepted that established wastewater treatment technologies can reliably reduce total inorganic nitrogen to 3 mg/L and TP to 0.1 mg/L. This report identifies a range of established technologies that are available and economically reasonable and have been applied in Washington and elsewhere in the United States to upgrade municipal wastewater treatment plants to achieve specific nitrogen and phosphorus reduction goals.

This report provides the information and tools to help regulatory agencies, engineers, planners and the general public understand the technologies and economic impact of upgrading wastewater treatment plants to reduce nitrogen and phosphorus loads.

1.3 DEVELOPMENT AND ORGANIZATION OF THE REPORT

In March 2009, the Washington Department of Ecology contracted with Tetra Tech to conduct the technical and economic evaluation of nitrogen and phosphorus removal at municipal wastewater treatment facilities in Washington. The original scope of work provided for up to 30 case studies of existing wastewater treatment facilities in Washington using a variety of technologies to achieve nitrogen and phosphorus removal.

As an initial effort, Tetra Tech completed case studies for two of the state's largest treatment plants: King County's South Treatment Plant and the City of Spokane's Riverside Treatment Plant. The case studies were reviewed by the Department of Ecology, EPA Region 10, a technical review committee, representatives from the studied facilities, and other interested parties, and a review workshop was held.

Lessons learned from the two case studies prompted Tetra Tech and the Department of Ecology to amend the scope of work. Under the revised work plan, six potential nutrient-removal objectives were evaluated to determine their technical and economic impacts on treatment plants. These objectives represent regulatory standards that could be adopted to set limits on concentrations of total inorganic nitrogen (TIN) or total phosphorus (TP) in municipal treatment plant effluent. The evaluations were performed for each of the main types of municipal treatment plant currently used in Washington. For each objective, analyses were performed of the improvements needed to achieve the objective year-round or to achieve it only during the dry season, when warm weather and low flows in receiving waters present the greatest risk of nutrients in effluent contributing to algae problems. The year-round and dry-season-only conditions represent the most and least expensive approaches to achieving each objective.

Table 1-1 summarizes the revised work plan and where each element of the work plan is presented in this report. In addition to the content summarized in Table 1-1, Chapter 2 provides detailed descriptions of the nutrient-removal objectives evaluated and the types of treatment plants for which each objective was analyzed, and Chapter 3 explains the methodology used in the analysis.

TABLE 1-1.
PROJECT WORK PLAN AND REPORT ORGANIZATION

Work Plan Element	Location in Report
Develop process and cost models for upgrading seven generic (hypothetical) wastewater treatment plant process categories with unit process design criteria consistent with those typically applied for wastewater treatment plants in the state and the Department of Ecology's Criteria for Sewage Works Design (Ecology, 2008).	Details of the models developed for this project are presented in Appendix A. Summaries of the process modeling results are presented in Chapters 4 – 10 (each chapter presents the results for one treatment plant type) and the cost results are summarized in Chapters 11 – 16 (each chapter presents costs for a separate nutrient-removal objective)
Evaluate capital and incremental operational costs to achieve six nutrient removal goals for several technologies at existing municipal treatment plants in Washington.	Nutrient-removal upgrade costs for the six nutrient-removal objectives are presented in Chapters 11 – 16 (each chapter presents costs for a separate objective)
Develop cost models (curves) for capital construction, incremental annual operation and maintenance (O&M), and 20-year life cycle costs for upgrading each of the seven categories of treatment plants for six different nutrient removal objectives.	Nutrient-removal upgrade cost curves for the six nutrient-removal objectives are presented in Chapters 11 – 16 (each chapter presents costs for a separate objective)
Estimate incremental capital, O&M, and 20-year life cycle costs to achieve the six different nutrient removal objectives for all wastewater municipal wastewater treatment facilities in Washington.	Estimated cumulative costs for upgrading municipal wastewater treatment plants statewide are presented in Chapter 17.
Compare process technology upgrade requirements and costs for upgrading existing municipal treatment plants in Washington to remove nutrients with upgrading plants to produce reclaimed water that meets the State of Washington's Class A reuse standards (WAC 173-221) for groundwater recharge	Incremental costs for providing treatment to achieve Class A water reuse standards are presented in Chapter 18.

CHAPTER 2.
NUTRIENT REMOVAL OBJECTIVES AND TREATMENT PLANTS EVALUATED

2.1 NUTRIENT REMOVAL OBJECTIVES

Six nutrient removal objectives stipulated by Ecology and EPA were identified for analysis. These objectives were selected based on the generally accepted performance associated with established nutrient removal technologies for municipal wastewater treatment plants. The objectives for this report are defined by the concentration of the nutrient of concern (nitrogen and/or phosphorus) remaining in the treated effluent, as follows:

- Objective A—Total inorganic nitrogen (TIN) <8 mg/L
- Objective B—TIN <3 mg/L
- Objective C—Total Phosphorus (TP) <1 mg/L
- Objective D—TP <0.1 mg/L
- Objective E—TIN <8 mg/L & TP <1 mg/L
- Objective F—TIN <3 mg/L & TP <0.1 mg/L

2.2 EXISTING MUNICIPAL WASTEWATER TREATMENT PLANTS

The Department of Ecology maintains a database of detailed information on each municipal wastewater treatment plant in the state. (The database was known as the Water Quality Permit Life Cycle System until 2010, when it was replaced with the Permit and Reporting Information System, or "PARIS.") For this study, Ecology provided Excel spreadsheets from each of its regional offices listing the names of all plants managed by that region, with pertinent information about each plant: design capacity (based on maximum-month flows), type of liquid stream treatment processes used, type of sludge treatment system, and where the final effluent is discharged (freshwater, marine water, groundwater or reuse). The secondary treatment processes used at the listed plants can be categorized as follows:

- Extended aeration (EA)
- Conventional activated sludge (CAS)
- Sequencing batch reactors (SBR)
- Fixed film systems (FF)
- Membrane bioreactors (MBR)
- High-purity oxygen activated sludge (HPO)
- Lagoons
- Septic treatment (SPT).

Tables 2-1 and 2-2 and Figures 2-1 and 2-2 summarize key data from the Ecology spreadsheets by treatment process type, number of plants, individual plant capacity and collective treatment capacity. The data are discussed in detail in the following sections.

TABLE 2-1.
NUMBER OF PLANTS BY SECONDARY TREATMENT PROCESS CATEGORY AND MAXIMUM-MONTH RATED PLANT CAPACITY

	Number of Plants							
Process Category	Capacity = 0 to 0.5 mgd	Capacity >0.5 to 5 mgd	Capacity >5 to 10 mgd	Capacity >10 to 20 mgd	Capacity >20 to 50 mgd	Capacity >50 to 100 mgd	Capacity > 100 mgd	**Total**
EA	31	36	5	3	2	1	0	**78**
CAS	30	18	7	3	2	1	1	**62**
SBR	17	12	1	0	0	0	0	**30**
FF	6	7	6	0	1	0	0	**20**
MBR	7	4	0	0	0	0	0	**11**
HPO	0	0	0	0	1	1	1	**3**
Lagoons	70	13	2	2	0	0	0	**87**
SPT	13	0	0	0	0	0	0	**13**
Total	**174**	**90**	**21**	**8**	**6**	**3**	**2**	**304**
% of Plants Statewide	57%	30%	7%	3%	2%	1%	1%	
% of Plants ≤ range	57%	87%	94%	96%	98%	99%	100%	

TABLE 2-2.
COLLECTIVE CAPACITY OF PLANTS BY SECONDARY TREATMENT PROCESS CATEGORY AND MAXIMUM-MONTH RATED PLANT CAPACITY

	Collective Treatment Capacity (mgd)							
Process Category	Plant Capacity = 0 to 0.5 mgd	Plant Capacity >0.5 to 5 mgd	Plant Capacity >5 to 10 mgd	Plant Capacity >10 to 20 mgd	Plant Capacity >20 to 50 mgd	Plant Capacity >50 to 100 mgd	Plant Capacity > 100 mgd	**Total**
EA	5	68	39	41	56	80	0	**289**
CAS	6	48	51	33	50	60	144	**392**
SBR	2	15	6	0	0	0	0	**23**
FF	1	11	44	0	36	0	0	**92**
MBR	9	0	0	0	0	0	0	**9**
HPO	0	0	0	0	20	60	215	**295**
Lagoons	10	22	16	23	0	0	0	**71**
SPT	1	0	0	0	0	0	0	**1**
Total	**34**	**163**	**154**	**98**	**163**	**200**	**359**	**1,171**
% of Statewide Capacity	3%	14%	13%	8%	14%	17%	31%	
% of Capacity ≤ range	3%	17%	30%	38%	52%	69%	100%	

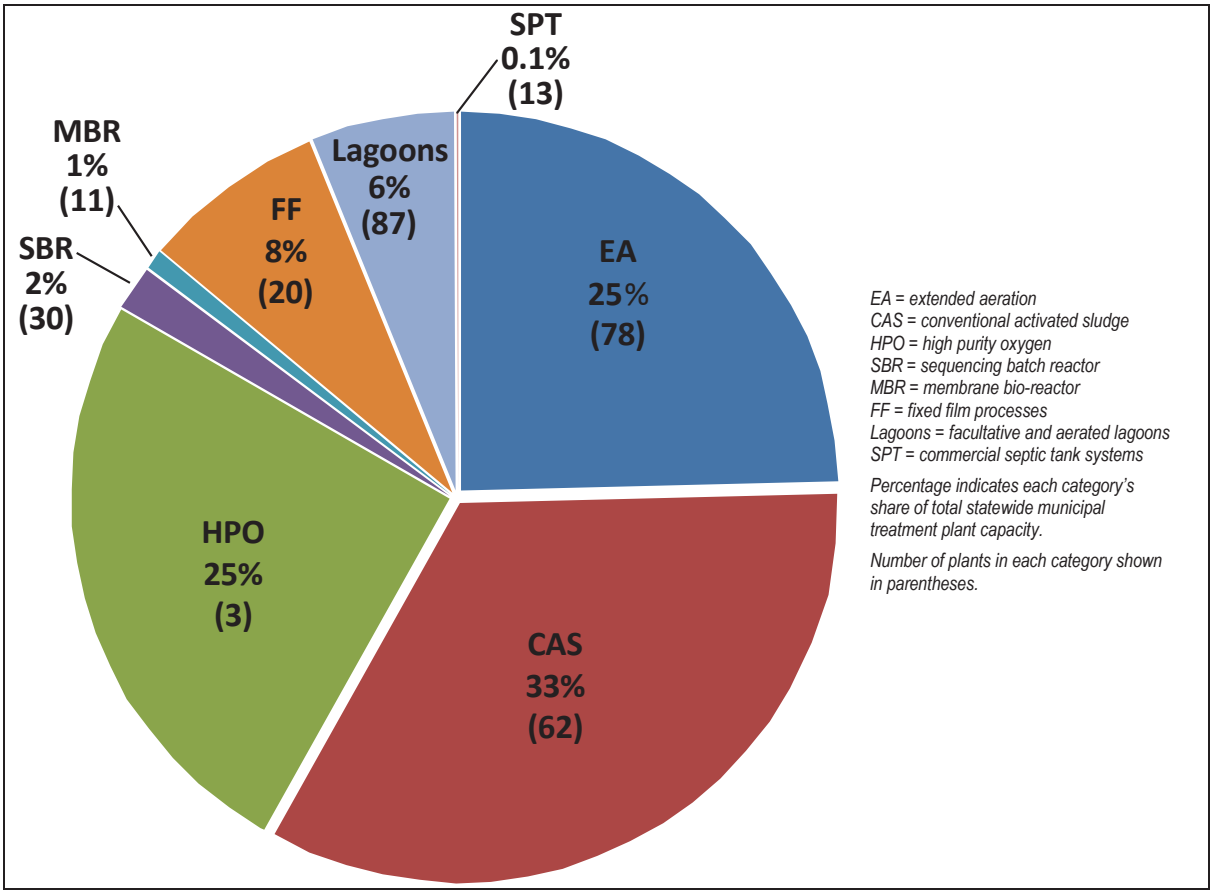

Figure 2-1. Number of Plants and Percentage of Total Statewide Treatment Capacity by Process Type

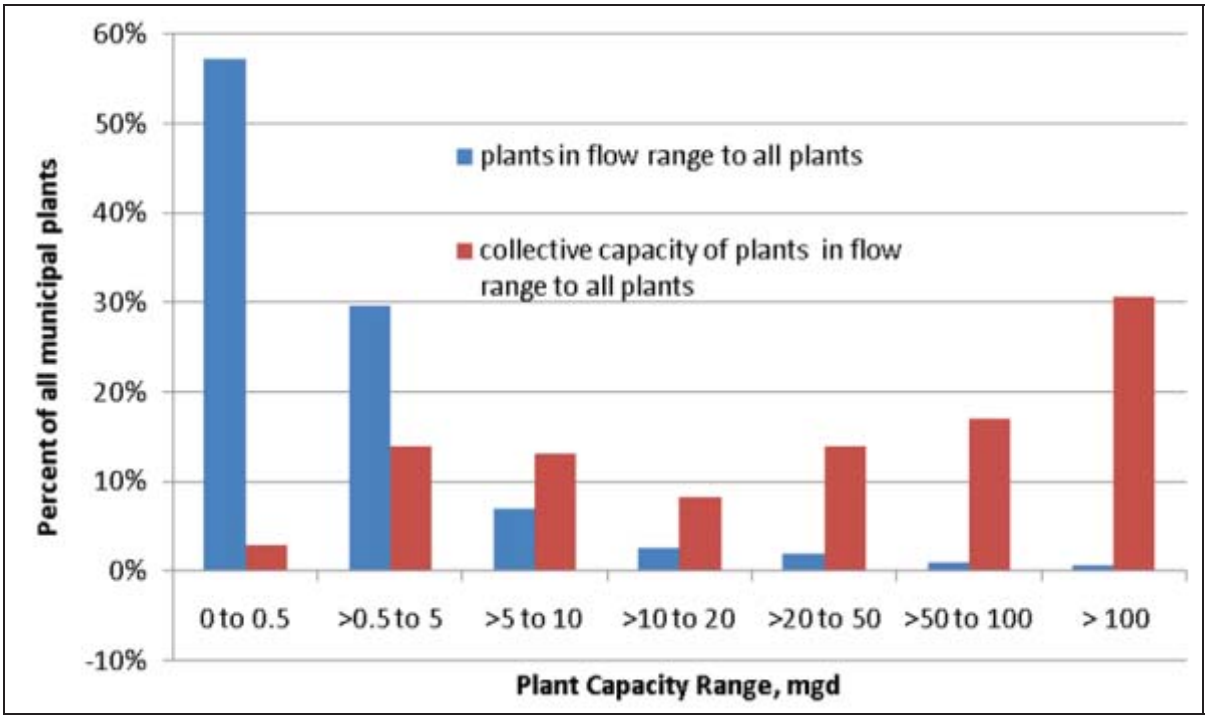

Figure 2-2. Distribution of Municipal Wastewater Treatment Plants in Washington by Capacity Range

2.2.1 Treatment Process Types

Extended Aeration Treatment Plants

The extended aeration plant category, which includes oxidation ditches, is the second most common municipal wastewater treatment process in Washington (after lagoon plants), with 78 EA plants representing 26 percent of all municipal wastewater treatment plants in the state. Collectively these plants can treat 289 mgd, which represents about 25 percent of total statewide capacity. The rated capacity of Washington's EA plants ranges from 0.012 to 79.8 mgd. The average capacity is 3.7 mgd and the median is 0.8 mgd. Most of these plants use aerobic digestion to stabilize their sludge; a few plants transport or convey their sludge to another treatment plant or to an independent biosolids recycling facility.

Conventional Activated Sludge Treatment Plants

Conventional activated sludge is the third most common municipal wastewater treatment process in Washington, with 62 CAS plants representing 20 percent of all municipal wastewater treatment plants in the state. Collectively these plants can treat 392 mgd, which represents about 33 percent of total statewide capacity. The rated capacity of Washington's CAS plants ranges from 0.018 to 144 mgd. The average capacity is 6.3 mgd and the median is 0.66 mgd. Most of these plants use anaerobic digestion to stabilize their sludge; a few plants dewater and incinerate their primary and waste activated sludge.

Sequencing Batch Reactor Treatment Plants

Sequencing batch reactors are frequently used for municipal wastewater plants with capacities below 10 mgd. The 30 SBR plants in Washington represent about 10 percent of all municipal wastewater treatment plants in the state. Collectively these plants can treat 22.5 mgd, which represents about 2 percent of total statewide capacity. The rated capacity of Washington's SBR plants ranges from 0.005 to 6 mgd. The average capacity is 0.75 mgd and the median is 0.2 mgd.

Fixed Film Treatment Plants

Fixed film plants include trickling filters, trickling filter/solids contact, and rotating biological contactor processes. The 20 fixed film municipal wastewater treatment plants in Washington represent 7 percent of all municipal wastewater treatment plants in the state. Collectively these plants can treat 92 mgd, which represents about 8 percent of total statewide capacity. The rated capacity of Washington's fixed film treatment plants ranges from 0.04 to 36.3 mgd. The average capacity is 4.6 mgd and the median is 1.785 mgd.

Membrane Bioreactor Treatment Plants

Membrane bioreactors represent a relatively new wastewater treatment process. The first full-scale MBR municipal treatment plant began operation for the Tulalip Tribes in 2003. The process has gained popularity for small- to medium-capacity plants because it requires a significantly smaller footprint than other technologies and produces a final effluent that often can meet Washington's Class A reclaimed water standard without additional treatment. Currently there are 11 Ecology-permitted MBR treatment plants in Washington ranging in capacity from 19,000 gpd to 4.2 mgd. The average capacity is 0.85 mgd and the median is 0.2 mgd. King County is currently constructing the Brightwater Treatment Plant; which is reported to be designed to treat up to 36 mgd with the MBR process.

High-Purity-Oxygen Activated Sludge Treatment Plants

High-purity-oxygen activated sludge is the least common municipal wastewater treatment process in Washington. There are only three HPO plants in Washington, about 1 percent of all municipal wastewater treatment plants in the state. Collectively these plants can treat 295 mgd, which represents about

25 percent of total statewide capacity. The rated capacity of Washington's HPO plants ranges from 20 to 210 mgd. The average capacity is 98 mgd and the median is 60 mgd. Two of the plants (King County West Point and City of Tacoma Central) stabilize their primary and waste activated sludge using anaerobic digestion; the City of Bellingham incinerates its primary and waste activated sludge.

Lagoon Treatment Plants

Lagoons are the most common wastewater treatment plant type in Washington. The 87 lagoon plants represent 29 percent of all municipal wastewater treatment plants in the state. Their collective capacity of 71 mgd represents 6 percent of the total statewide capacity. The rated capacity of lagoon plants in Washington ranges from 0.005 mgd to 12.7 mgd. The average capacity is 0.8 mgd and the median is 0.15 mgd.

Septic Treatment Plants

Wastewater treatment systems based on individual domestic septic tanks are used primarily in rural areas not served by a municipal sewer system and treatment plant. These individual on-site systems are not evaluated in this study. There are 13 commercial on-site septic tank based treatment systems permitted by Ecology. Seven of these facilities discharge treated effluent to ground under a State Waste Discharge permit; the remaining six discharge to natural surface water courses. Nine of these facilities have supplemental polishing treatment processes to improve effluent quality: seven have recirculating sand or gravel filters and two have polishing wetlands. Collectively these facilities have a treatment capacity of 1.4 mgd, which represents only 0.1 percent of the total statewide capacity. The rated capacity of these commercial septic treatment systems ranges from 4,000 gpd to 0.4 mgd. The average capacity is 0.11 mgd and the median is 50,000 gpd.

2.2.2 Treatment Plant Capacity

Capacity Up to 0.5 MGD

Plants with maximum-month capacities up to 0.5 mgd account for 57 percent of all municipal wastewater treatment plants in Washington, but their collectively treatment capacity is only about 3 percent of total statewide capacity. All of the process categories are represented in this size class except HPO, which is used in Washington only for plants with capacities over 20 mgd. Lagoons are the most common treatment processes in this capacity range, accounting for 40 percent of the plants, followed by extended aeration processes at 18 percent. CAS plants make up 17 percent of this capacity class. All commercial septic tank systems in the state are in this capacity class, representing 7.5 percent of plants this size. MBR and FF process plants each represent less than 4 percent of the plants in this class.

Capacity from 0.5 MGD to 5 MGD

Plants with maximum-month capacities greater than 0.5 mgd and up to 5 mgd account for 30 percent of all municipal wastewater treatment plants in Washington. Extended aeration treatment plants account for 40 percent of the plants in this range; CAS plants account for 20 percent; lagoon plants account for 14 percent; SBR plants account for 13 percent; fixed film plants account for 8 percent; and MBR plants account for 5 percent. Collective capacity of plants in this capacity class represents 14 percent of total statewide capacity.

Capacity from 5 MGD to 10 MGD

Plants with maximum-month capacities greater than 5 mgd and up to 10 mgd account for 7 percent of the plants statewide and 13 percent of the total statewide capacity. CAS is the most common treatment process in this class, representing 33 percent of the number of plants and 33 percent of the collective

treatment capacity. FF and EA plants are also significant in this class, providing 25 percent and 29 percent, respectively, of the collective capacity of this range of plants.

2.2.3 Nutrient Removal Quantities

Conventional secondary treatment processes generally have similar nutrient removal efficiencies. Assuming that all existing treatment processes have equivalent nutrient removal efficiencies, then the relative mass of nutrients discharged by a treatment plant is directly proportional to the flow of wastewater treated. Based on the data in Tables 2-1 and 2-2, this leads to the following estimates of nutrient removal quantities:

- 97 percent of the nutrients discharged by municipal wastewater treatment plants in Washington is discharged by the 43 percent of plants with rated capacities greater than 0.5 mgd.
- 83 percent of the nutrients discharged by municipal wastewater treatment plants in Washington is discharged by the 13 percent of plants with rated capacities greater than 5 mgd.
- 70 percent of the nutrients discharged by municipal wastewater treatment plants in Washington is discharged by the 6 percent of plants with rated capacities greater than 10 mgd.

2.3 WASTEWATER FLOW AND LOAD CHARACTERISTICS

Influent wastewater characteristics influence the concentration of nitrogen and phosphorus remaining in a treatment plant's effluent. In the absence of significant high-strength, carbon-rich industrial wastewater, municipal wastewater generally contains more inorganic nitrogen and phosphorus than can be removed by conventional secondary biological treatment processes.

Influent nitrogen and phosphorus concentrations and loads are available for only a few of the wastewater treatment plants in the Ecology database. The limited data available in the database show nutrient concentrations and loads consistent with generally recognized typical values for untreated municipal wastewater. Rather than establishing influent flows and pollutant loads for this study from any site-specific wastewater treatment plant record, it was decided to use commonly reported generic values, as summarized in Table 2-3. These values were used to calculate the concentration of nutrients and other constituents of concern in the influent wastewater to be treated. The flows and loads are population-driven with no specific allowance for industrial and commercial loads. Future facility-specific evaluations for nutrient removal should adjust the values to represent actual flows and loads contributed by the facility's residential, commercial and industrial users.

TABLE 2-3.
DESIGN CRITERIA FOR INFLUENT FLOWS AND LOADS

Constituent	Design Criteria
Annual Average Flow	100 gallons per capita per day (gpcd)
Average Wet-Weather Flow	120 gpcd
Maximum-Month Wet-Weather Flow	160 gpcd
Average Dry-Weather Flow	80 gpcd
Maximum-Month Dry-Weather Flow	110 gpcd
Peak-Day Flow	275 gpcd
BOD5	0.22 pounds per capita per day (ppcd)[a]
TSS	0.25 ppcd[a]
Total Kjeldahl Nitrogen (TKN) as N	0.032 ppcd[a]
Organic Nitrogen as N	0.013 ppcd[a]
Ammonia as N	0.019 ppcd[a]
Total Phosphorus as P	0.0076 ppcd[a]
Organic Phosphorus as P	0.0028 ppcd[a]
Inorganic Phosphorus as P	0.0048 ppcd[a]

a. Values are from Table 3-12 Metcalf &Eddy 2003

CHAPTER 3.
EVALUATION APPROACH

This chapter describes the methodology used to evaluate the implementation of technology upgrades to improve nutrient removal at existing municipal wastewater treatment plants in Washington. The evaluation assessed the following:

- The general feasibility of upgrading
- The general nature and extent of process modifications that would need to be implemented
- Capital and operation and maintenance costs associated with the upgraded plants.

3.1 TREATMENT PROCESS UPGRADES EVALUATED

The evaluation covered a wide range of existing plants and potential improvements:

- Upgrades were evaluated for seven of the eight existing treatment process types described in Chapter 2. Septic treatment plants represent only 1 percent of the total statewide treatment capacity and were not included in the scope of work.
- For each type of existing treatment process evaluated except HPO, upgrades were assessed for achieving each of the six nutrient removal objectives described in Chapter 2. For HPO, the objectives that include phosphorus removal were not evaluated.
- For each existing treatment process type and each nutrient removal objective, upgrades were evaluated for providing nutrient removal year-round or providing it only seasonally, during the dry-weather season.

The project scope of work describes the processes to be implemented for each upgrade scenario. Table 3-1 summarizes these processes.

3.2 BIOWIN MODELING

Biowin is a modeling program used to design and simulate treatment plants. The model can evaluate many different treatment processes for both liquid and solid streams. Biowin models were developed to establish the performance of each existing treatment plant technology and to evaluate upgrades for achieving the defined nutrient removal objectives. Generic hypothetical treatment plants typical of those in Washington were used as the basis of the analysis.

3.2.1 Modeling Assumptions

The following general assumptions were made for modeling the treatment technologies using Biowin:

- Base Case/Existing System Model:
  - For each existing treatment process type, a 1-mgd hypothetical base case was generated, based on maximum-month wet-weather flow (MMWWF) and loading conditions.
  - For the base case system, tank sizes and process parameters such as hydraulic retention time (HRT), solids retention time (SRT), etc. were established according to standards set forth in the Department of Ecology's *Criteria for Sewage Works Design* ("The Orange Book").

TABLE 3-1.
TREATMENT PROCESS UPGRADES EVALUATED TO ACHIEVE NUTRIENT-REMOVAL OBJECTIVES

	Objective A	Objective B	Objective C	Objective D	Objective E	Objective F
Definition of Objective						
Effluent TIN	< 8 mg/L	< 3 mg/L	—	—	< 8 mg/L	< 3 mg/L
Effluent TP	—	—	< 1 mg/L	< 0.1 mg/L	< 1 mg/L	< 0.1 mg/L
	Treatment Processes to Achieve Objective					
Existing Extended Aeration Plant						
Year-Round	MLE	4BDP+M	C	C+F	MLE+C	4BDP+M+C+F
Seasonal	MLE	4BDP+M	C	C+F	MLE+C	4BDP+M+C+F
Existing Conventional Activated Sludge Plant						
Year-Round	MLE+MBR	4BDP+MBR+M	C	C+F	MLE+MBR+C	4BDP+MBR+M+C
Seasonal	MLE	4BDP+M	C	C+F	MLE+C	4BDP+M+C+F
Existing Sequencing Batch Reactor Plant						
Year-Round	SBR	SBR+DNF+M	SBR+C	SBR+C+F	SBR+C	SBR+DNF+C+F+M
Seasonal	SBR	SBR+DNF+M	SBR+C	SBR+C+F	SBR+C	SBR+DNF+C+F+M
Existing Trickling Filter, Trickling Filter/Solids Contact, or Rotating Biological Contactor Plant						
Year-Round	MLE+MBR	4BDP+MBR+M	C	C+F	MLE+MBR+C	4BDP+MBR+M+C
Seasonal	MLE	4BDP+M	C	C+F	MLE+C	4BDP+M+C+F
Existing Membrane Bioreactor Plant						
Year-Round	OC	M	C	C	C	C+M
Seasonal	OC	M	C	C	C	C+M
Existing High-Purity Oxygen Activated Sludge Plant						
Year-Round	MLE+MBR	4BDP+MBR	—	—	—	—
Seasonal	MLE	4BDP+M	—	—	—	—
Existing Aerated Lagoon or Facultative Lagoon Plant						
Year-Round	MLE	4BDP+M	C	C+F	MLE+C	4BDP+M+C+F
Seasonal	MLE	4BDP+M	C	C+F	MLE+C	4BDP+M+C+F

4BDP = Four-stage Bardenpho system for denitrification
C = Chemical addition: alum for phosphorous removal, magnesium hydroxide for pH control
DNF = Denitrification filters
F = Tertiary filters for phosphorus removal
M = Methanol addition for denitrification
MBR = Membrane bioreactors for denitrification
MLE = Modified Ludzack Ettinger process for denitrification
OC = Operational changes only
SBR = Sequencing batch reactor (capacity increased for denitrification)

  - Clarifiers for existing treatment processes were sized based on peak-day flows using overflow rates defined in the Orange Book:
    - Fixed Film Systems: 1,200 gallons per day per square foot (gpd/ft^2)
    - Complete Mix Activated System: 1200 gpd/ft^2
    - Extended Aeration System: 500 gpd/ft^2
  - Existing plant O&M requirements were calculated at average wet-weather flow (AWWF) for six months at 10ºC and average dry-weather flow (ADWF) for six months at 15ºC.
- Year-Round Model Assumptions:
  - Capital Facilities (tanks and equipment sizing):
    - 1-mgd models were developed for the upgrades required to achieve each nutrient removal treatment objective for each treatment process type.
    - Process parameters for capital facilities such as tanks and aeration blowers were designed using MMWWF and loadings.
  - O&M Assumptions:
    - O&M requirements such as aeration energy and chemical usage were calculated at AWWF for 6 months at 10ºC and ADWF for 6 months at 15ºC using capital facilities designed for MMWWF.
- Seasonal Model Assumptions:
  - Capital Facilities (tanks and equipment sizing):
    - 1-mgd models were developed for the upgrades required to achieve each nutrient removal treatment objective for each treatment process type.
    - Process parameters for capital facilities such as tanks and aeration blowers were designed to reliably achieve the nutrient removal objectives at maximum-month dry-weather flow (MMDWF) and to provide not less than the existing level of treatment during the MMWWF.
  - O&M Assumptions:
    - O&M requirements such as aeration energy and chemical usage were calculated at ADWF for 6 months at 15ºC using capital facilities designed at MMDWF.

3.2.2 Modeling Design Criteria

Table 3-2 shows design criteria flows and loads for the hypothetical 1-mgd MMWWF model. Values were calculated as follows:

- Flows other than MMWWF for the hypothetical model were calculated by applying flow ratios from Table 2-3 to the MMWWF value of 1 mgd. For example, Table 2-3 gives per capita flows of 275 gpcd for peak-day flow (PDF) and 160 gpcd for MMWWF, so the ratio of PDF to MMWWF is 1.72. The PDF for the hypothetical model, therefore, is 1.72 times 1 mgd, or 1.72 mgd.
- pH was assumed to be slightly less than neutral for wet weather conditions, at 6.8, and neutral for dry weather, at 7.0.
- Based on the per capita MMWWF of 160 gpcd from Table 2-3, the population to generate the hypothetical MMWWF of 1 mgd is 6,250. This population was used with the per capita loading rates in Table 2-3 to calculate loading rates for the hypothetical model for nitrogen, phosphorus, BOD_5 and TSS.

TABLE 3-2.
DESIGN CRITERIA FLOWS AND LOADINGS FOR 1-MGD HYPOTHETICAL MODEL

		Annual Average	Max Month Wet Weather	Average Wet Weather	Max Month Dry Weather	Average Dry Weather	Peak Day
Flow (mgd)		0.63	1.00	0.75	0.69	0.50	1.72
pH (units)		7.0	6.8	6.8	7.0	7.0	7.0
	Loading Rate (lbs/day)	Concentration (mg/L)					
BOD_5	1,376	265	165	221	241	331	96
TSS	1,564	301	188	251	273	376	109
VSS[a]	1,095	210	132	175	191	263	77
TKN as N	200	38.5	24.1	32.1	35.0	48.1	14.0
Organic Nitrogen as N	81	15.6	9.8	13.0	14.2	19.5	5.7
Ammonia as N	119	22.9	14.3	19.1	20.8	28.6	8.3
Total Phosphorus as P	48	9.1	5.7	7.6	8.3	11.4	3.3
Organic Phosphorus as P	18	3.4	2.1	2.8	3.1	4.2	1.2
Inorganic Phosphorus as P	30	5.8	3.6	4.8	5.2	7.2	2.1
Alkalinity	835	161	100	134	146	200	58.4
Calcium	63	12.0	7.5	10.0	10.9	15.0	4.4
Magnesium	25	4.8	3.0	4.0	4.4	6.0	1.8

a. VSS = volatile suspended solids (assumed to equal 0.7 * TSS)

- Concentrations are calculated by dividing the mass loading by the flow rate, with multipliers to convert to correct units.
- Influent alkalinity during average dry weather conditions was assumed to be 200 mg/L, representing medium-strength wastewater. Concentrations for other flows were calculated using flow ratios from Table 2-3.
- Calcium was assumed to be 15 mg/L during average dry weather conditions. Concentrations for other flows were calculated using flow ratios from Table 2-3.
- Magnesium was assumed to be 6 mg/L during average dry weather conditions. Concentrations for other flows were calculated using flow ratios from Table 2-3.

3.3 COST EVALUATION

3.3.1 Treatment Plant Capacities Evaluated

Cost curves were developed for capital and O&M costs associated with the evaluated improvements. The curves were based on estimates for three plant capacities for each existing treatment process type, as shown in Table 3-3. The plant capacities chosen cover the full range of existing plants for each existing treatment process type. Sizing tables for different plant capacities were developed using process modeling results for each treatment plant upgrade.

TABLE 3-3.
MAXIMUM-MONTH TREATMENT PLANT CAPACITIES EVALUATED FOR COST CURVES

Existing Treatment Process Type	Number of Capacities Evaluated	Maximum-Month Plant Capacity (mgd)		
		Low	Mid	High
Extended Aeration	3	1	10	100
Sequencing Batch Reactor	3	0.5	2	10
Conventional Activated Sludge	3	1.0	10	150
Fixed Film	3	1.0	10	150
Membrane Bioreactor	3	1.0	10	100
High-Purity-Oxygen Activated Sludge	2	20	NA	220
Lagoons	3	0.5	5.0	50

3.3.2 Unit Costs and Rates

Biowin models were developed for each base case system and upgrade system to confirm size and capacity of major process elements required to achieve the treatment objectives. CapdetWorks 2.5 software was then used to develop capital and O&M cost estimates, with cost indices updated to January 2010 values. Costs for processes that are not part of the CapdetWorks library, such as MBRs, were developed using data from recent facilities constructed in Washington and from system vendors. Unit cost and rates used for the cost models are shown in Table 3-4.

3.3.3 Assumptions and Methods

Capital cost estimates assumed that all technology improvements were necessary to achieve the selected nutrient removal objective. Capital cost estimates assumed maximum-month flow and maximum-month load conditions, including internal recycle from any solids processing systems. Cost curves, cost model equations, and a goodness of fit indicators (i.e. correlation coefficient) were developed using the "power" curve fitting function in Microsoft Excel 2007. The accuracy of the estimated costs is in the range of -50 percent to +100 percent, consistent with a Class 5 Planning Estimate as defined by the Association for the Advancement of Cost Engineering.

Capital and O&M costs were determined by estimating first the current constructed value of existing process facilities and then the constructed value of process facilities after implementation of the necessary process upgrades. The incremental capital cost was the difference between the capital cost of the retained portion of the existing secondary treatment process and the cost to construct a complete new secondary treatment process that would achieve the nutrient removal objective. Cost estimates included the following:

- An additional 12 percent of the construction cost calculated by CapdetWorks was added to both the existing and the upgraded plants to account for the cost for construction of instrumentation and control systems.
- An allowance of 7 percent of the resultant cost for the upgrade was added to account for general site, structural, and electrical modifications.
- When an existing unit needs to be demolished, a 10 percent cost of that unit will be added as the demolition cost.

TABLE 3-4.
UNIT COSTS AND RATES

Unit Costs	
Building Cost	$150/ft^2
Excavation	$8/cubic yard
Wall Concrete	$800/ cubic yard
Slab Concrete	$500/ cubic yard
Crane Rental	$200/hour
Canopy Roof	$16/ft^2
Electricity	$0.1/kW-hour
Hand Rail	$75/foot
Land Costs	$0/acre
Labor Rates	
Construction Labor Rate	$45/hour
Operator Labor Rate	$70/hour
Administration Labor Rate	$35/hour
Laboratory Labor Rate	$45/hour
Chemical Costs (all costs are per mass of the dry form)	
$AL_2(SO_4)_3$*14 H_2O as 42.8%	$0.06/lb
Magnesium hydroxide	$0.21/lb
Methanol	$3/gallon
Polymer	$4/lb
Citric Acid	$3/gallon
Sodium Hypochlorite	$0.80/gallon
Financial	
Interest Rate	3%
Construction Period	3 years
Construction loan period	20 years
Operating Life of Plant	40 years
Other Costs	
Engineering Design Fee	15%
Miscellaneous	15%
Administration/Legal	2%
Inspection	8%
Contingency	30%
Technical	7%
Profit and Overhead	15%
Cost Indices	
Marshall and Swift Index	1448.3 (January 2010)
Engineering News Records Cost Index	8660.1 (January 2010)
Pipe Cost Index	794.5 (January 2010)

- The capital and O&M costs for chemical storage and feed systems for alum and methanol were determined using CapdetWorks based on the dosage requirements shown in the sizing tables.
- CapdetWorks does not provide costs for magnesium hydroxide storage and feed systems, so an equivalent capacity hydrated lime dosing system was used to represent the costs of magnesium hydroxide storage and feed.
- The annual cost of alum, magnesium hydroxide and methanol were determined based on calculated annual usage and the unit prices shown in Table 3-4.

The CapdetWorks model does not currently provide costing information for MBR treatment systems. Costs for MBR equipment were interpolated from vendor information provided by Enviroquip, and Zenon for 1, 10 and, 135 mgd. MBR processes require fine screening of the influent to reduce physical damage to the membranes. A 1.5-mm to 2.5-mm fine screening process is included in the cost estimates for upgrades involving MBR technology. The cost related to the MBR tankage and aeration system was estimated using CapdetWorks model.

3.3.4 Use of Cost Modeling Results

Capital, incremental O&M and 20-year life cycle costs associated with upgrades for each nutrient removal objective are presented in Chapters 12 through 17. The results from this type of analysis are likely to vary significantly from real costs of upgrading a particular treatment plant facility, depending on the facility's specific conditions. The cost models could be applied to all municipal wastewater treatment plants within a specific watershed to develop a preliminary estimate of costs associated with addressing regional nutrient-related water quality concerns.

Cost budgets for implementing nutrient removal at any specific facility should be based on a site-specific engineering report so that concerns, needs and constraints specific to the site, community and facility can be thoroughly addressed. Site-specific factors such as wastewater characteristics, site constraints, geotechnical conditions, and the condition and layout of the existing facility can have a dramatic impact on the ultimate cost of a treatment plant upgrade project.

CHAPTER 4.
TECHNOLOGICAL EVALUATION
FOR EXTENDED AERATION PLANTS

4.1 BASE CASE/EXISTING SYSTEM

Two base case Biowin models were developed to represent existing extended aeration activated (EA) sludge plants: one with a complete-mixed aeration tank with diffused aeration (DA) and the other an oxidation ditch with mechanical aeration (MA). Figure 4-1 shows the process flow schematic for the liquid and solids treatment for a hypothetical DA extended aeration plant with a design MMWWF capacity of 1.0 mgd. The process flow schematic for an MA plant would be similar, with the aeration tank replaced by an oxidation ditch. Design data for both plants is presented in Table 4-1.

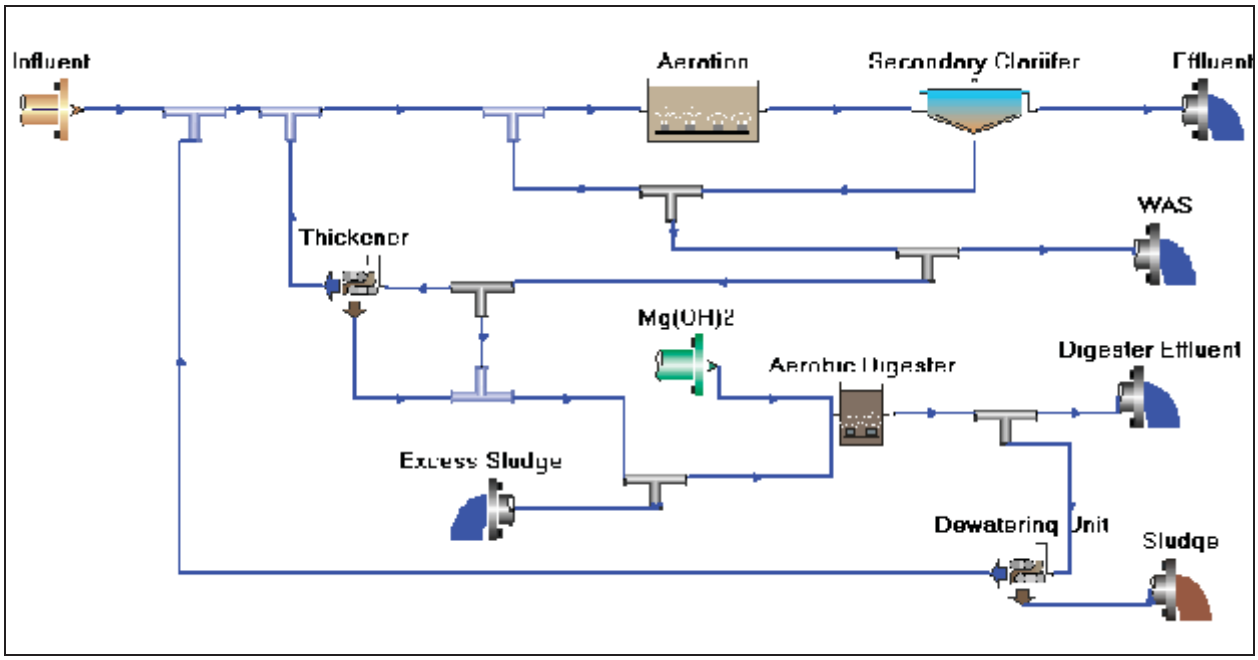

Figure 4-1. Process Flow Schematic of an Extended Aeration Treatment Plant with Aeration Tank

The DA and MA extended aeration models produced similar effluent quality: BOD_5 concentration of less than 30 mg/L, TSS concentration of less than 30 mg/L and a total ammonia-nitrogen concentration of less than 2 mg/L. It was assumed that these existing plants are currently operated to remove ammonia by the nitrification process but not to denitrify to any significant extent. The modeled secondary clarifiers were sized for peak-day flow conditions, with an overflow rate of 500 gallons per day per square foot (gpd/ft^2), which is consistent with the recommendations in the 1998 Washington State Orange Book. For modeling purposes, it was assumed that the plant thickens its waste activated sludge prior to digestion, stabilizes the sludge using aerobic digestion, and mechanically dewaters the digested sludge.

TABLE 4-1
BASE CASE/EXISTING SYSTEM FOR EXTENDED AERATION PLANT

Description	Mechanical Aeration (MA)	Diffused Aeration (DA)
MMWWF (mgd)	1.0	1.0
Temperature (ºC)	10	10
Oxidation Ditch/Aeration Tank		
Tank Volume (million gallons (MG))	1.00	1.00
HRT (hrs)	24	24
Mixed Liquor Suspended Solids (mg/L)	2,809	2,807
DO Concentration (mg/L)	2	2
Ditch Power Uptake (HP)	80	
Aeration Tank Airflow rate (cubic feet/minute)		904
Biowin SRT (days)	18.01	18.01
RAS Recycle Rate	0.5Q	0.5Q
Clarifier		
Area (SF)	3,500	3,500
Surface Overflow Rate (gal/ft^2)	286	286
Aerobic Digester		
Solids % from Clarifier	0.8%	0.8%
Solids % from Thickener	5.0%	5.0%
Combined Solids % to Aerobic Digester	3.5%	3.5%
VSS loading to Digester (pounds/day)	730	730
TSS loading to Digester (pounds/day)	1,301	1,301
Volume (MG)	0.25	0.25
Digester Sludge Age (days)	56.33	56.33
Sludge Production		
Dry Sludge Production (pounds/day)	923	923
Effluent		
BOD (mg/L)	1.85	1.85
TSS (mg/L)	4.5	4.5
Total Phosphorous (mg/L)	4.27	4.27
Ammonia N (mg/L)	0.63	0.61
TIN (mg/L)	15.97	16.05
pH	6.53	6.58

4.2 YEAR-ROUND NUTRIENT REMOVAL

Improvements required to provide year-round nutrient removal to achieve each treatment objective are described below. It was assumed that existing plants with mechanical aeration would be upgraded to diffused aeration in order to meet the all the nutrient removal objectives except those involving only phosphorus removal (Objectives C and D). Process design data for all objectives are included in Table 4-2, which is attached at the end of this chapter.

4.2.1 Objective A

Process Description

The upgrade evaluated for achieving Objective A (TIN <8 mg/L) for an extended aeration plant is to convert the existing system to a Modified Ludzack-Ettinger (MLE) activated sludge process, retaining the existing clarifiers. The MLE process is a continuous-flow suspended-growth process with an anoxic zone followed by an aeration zone and a clarifier. Denitrification is achieved by recycling nitrate produced by the aeration zone back to the upstream anoxic zone, as shown in Figure 4-2.

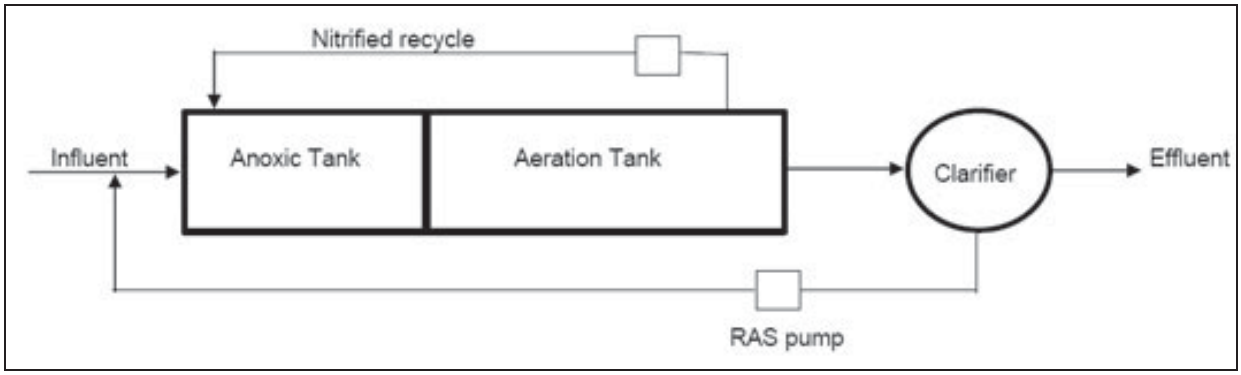

Figure 4-2. Modified Ludzack-Ettinger Process Flow Schematic

Influent wastewater, return sludge from the clarifier and nitrate-rich mixed liquor recycled from the aeration tank are mixed in the anoxic zone. When the dissolved oxygen concentration is near zero, some facultative heterotrophic bacteria can draw oxygen from nitrate in order to use the organic carbon in raw wastewater as an energy source and a carbon source for growth. The influent wastewater provides the carbon source and the return activated sludge (RAS) from the clarifier provides microorganisms.

The upgraded capital facilities were sized with capacity for the MMWWF. The upgrade includes partitioning the existing 1.0-million-gallon (MG) aeration tank into two compartments: a 0.3-MG anoxic compartment and a 0.7-MG aeration compartment. New internal recycle pumps would be required for pumping nitrate-rich mixed liquor from the aeration compartment to the anoxic compartment. The internal recycle ratio would be 6 times the influent flow (6Q). New mixers would be installed in the anoxic tank to mix the contents of the tank and to prevent sedimentation of solids. Figure 4-3 shows the upgraded process flow schematic. Table 4-2 summarizes the process design data. Detailed reports of the Biowin model are contained in Appendix A.

Recycled Loads

Process side streams generated by the thickening of the waste activated sludge prior to digestion and the dewatering of the aerobically digested sludge would be returned and blended with the influent wastewater. The percentage of total nitrogen (TN) and total phosphorus (TP) contained in these recycle streams relative to the mass contained in raw influent wastewater was calculated using Biowin model outputs. The results indicate that approximately 18 percent of the total nitrogen entering the existing plant is recycled. Upgrading the plant to achieve Objective A reduces the mass of total nitrogen recycled by approximately 2 percent on an annual basis. Although phosphorus removal is not part of Objective A, the upgrade will increase the amount of phosphorus recycled in the plant from about 23 percent to 50 percent on an annual basis. Table 4-3 summarizes the nitrogen and phosphorus recycle loads for the existing plant and the upgraded plant.

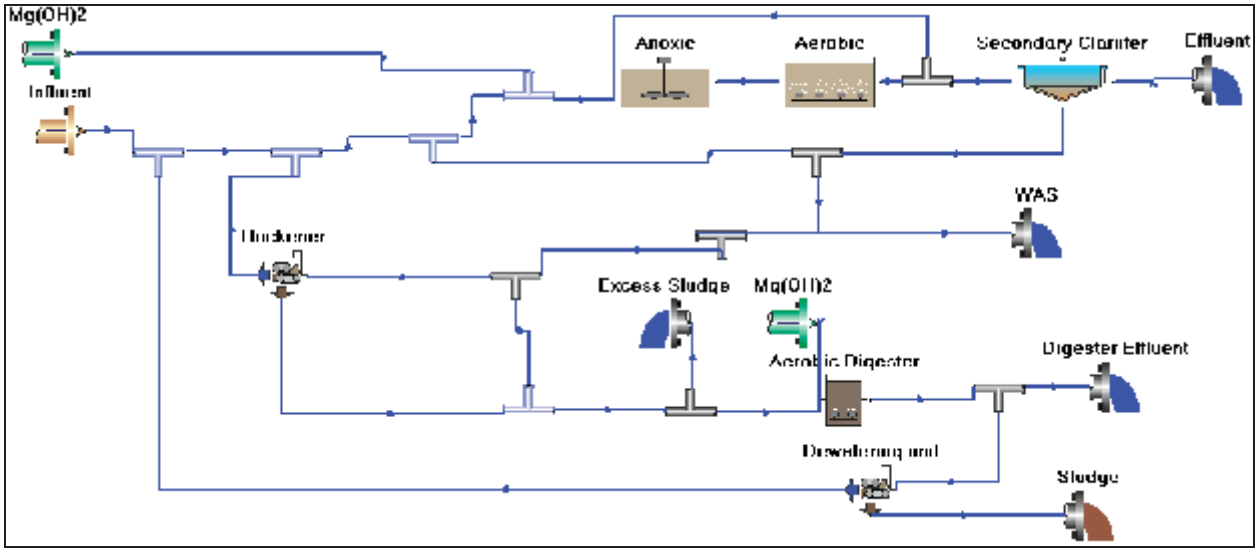

Figure 4-3. Process Schematic of Extended Aeration Plant Upgraded for Objective A Year-Round

TABLE 4-3.
NUTRIENT RECYCLING COMPARISON FOR EXTENDED AERATION SYSTEMS, OBJECTIVE A YEAR-ROUND NUTRIENT REMOVAL

	% of TN Recycled		% of TP Recycled	
	AWWF	ADWF	AWWF	ADWF
Existing Plant	18.0%	17.9%	23.9%	23.3%
Objective A Year-Round	16.3%	15.5%	48.7%	64.1%

Sludge Production

From Table 4-2, average sludge produced per day (the average of the AWWF and ADWF sludge production) is 949 pounds per day (ppd) (0.7 pound per pound of BOD_5 applied) for the existing system and 939 ppd for Objective A year-round. This reduction in sludge production associated with achieving Objective A is not significant; there should be no significant change in the overall mass of sludge produced.

Energy Consumption

For year-round flows, energy usage costs were determined based on annual average conditions, calculated as the average of AWWF and ADWF energy usage. As a result of implementing the MLE denitrification process, the average air flow rate to meet Objective A is approximately 20 percent less than the rate required for the existing DA system (see Table 4-2). However, the increased energy demand for mixing and pumping the internal mixed liquor to the anoxic compartment exceeds the energy savings associated with the reduction in process air demand.

MA Plant

Upgrading the MA plant to achieve Objective A year-round would increase the plant energy requirements by 11,500 kW-hours/year, or about 1 percent, as shown in Table 4-4. There would be no increase in the

energy requirements for solids processes. The annual energy consumption for the upgraded plant would increase by about 50 kW-hours per million gallons of influent wastewater treated.

TABLE 4-4.
ADDITIONAL ENERGY CONSUMPTION FOR UPGRADING MA PLANT TO ACHIEVE OBJECTIVE A YEAR-ROUND

Yearly Energy Required	
Existing MA Plant	998,500 kW-hours/year
Objective A Year-Round	1,010,000 kW-hours/year
Energy Increase for Upgrade	
Annual Quantity	11,500 kW-hours/year
Percent	1.2%
Increase per Volume of Plant Flow	50 kW-hours/MG

DA Plant

Upgrading the DA plant secondary treatment process to achieve Objective A year-round would increase the plant energy requirements by 159,500 kW-hours/year, or about 19 percent, as shown in Table 4-5. There would be no increase in the energy requirements for solids processes. The annual energy consumption for the upgraded plant would increase by about 700 kW-hours per million gallons of influent wastewater treated.

TABLE 4-5.
ADDITIONAL ENERGY CONSUMPTION FOR UPGRADING DA PLANT TO ACHIEVE OBJECTIVE A YEAR-ROUND

Yearly Energy Required	
Existing DA Plant	850,500 kW-hours/year
Objective A Year-Round	1,010,000 kW-hours/year
Energy Increase for Upgrade	
Annual Quantity	159,500 kW-hours/year
Percent	19%
Increase per Volume of Plant Flow	699 kW-hours/MG

Chemical Consumption

For year-round flows, chemical usage costs were determined based on annual average conditions, calculated as the average of AWWF and ADWF chemical usage.

Upgrades to achieve Objective A would require the use of chemicals only for alkalinity control. EA plants require alkalinity supplementation to maintain the pH of the effluent at or above 6.5. Diffused aeration systems are less efficient than mechanical aeration systems in stripping surplus carbon dioxide from the wastewater, so they generally require more alkalinity supplementation.

Upgrades for Objective A would reduce the need to supplement alkalinity that is consumed by nitrification (7.14 pounds of alkalinity as $CaCO_3$ consumed per pound of ammonia-nitrogen converted to nitrate). Complete denitrification of nitrate to nitrogen gas generates alkalinity that can offset up to

50 percent of the alkalinity consumed by nitrification (3.57 pounds of alkalinity as $CaCO_3$ recovered per pound of nitrate-nitrogen converted to nitrogen gas).

For an MA plant upgraded to achieve Objective A year-round, the annual quantity of magnesium hydroxide required to control alkalinity would be reduced about 50 percent, from 7,300 gallons to 3,650 gallons. This is a reduction of about 16 gallons of magnesium hydroxide per million gallons of plant influent flow.

For a DA plant upgraded to achieve Objective A year-round, the annual quantity of magnesium hydroxide required to control alkalinity would be reduced about 89 percent, from 33,000 gallons to 3,650 gallons. This is a reduction of about 128 gallons of magnesium hydroxide per million gallons of plant influent flow.

Footprint Requirements

Footprint requirements were calculated using the CapdetWorks costing model:

- No additional tanks are required to upgrade the existing DA system to achieve Objective A as the existing aeration tank would be partitioned into anoxic and aeration tanks. Since the amount of air required for Objective A is less than for the existing system, no additional blowers would be required. No new pump building would be required for the internal recycle pumps as they would be installed in the existing aeration tank.
- Upgrading an MA plant to achieve Objective A would require conversion to a DA plant. New blower buildings would be constructed to supply air to the new diffused aeration system. The existing ditch rotors would be removed and replaced with fine bubble diffusers. Based on CapdetWorks, for a 1.0-mgd plant, the required site area for the new blower building would be approximately 0.3 acres.

Table 4-6 compares the additional site area requirements, or footprint area, for upgrading existing MA and DA plants to achieve Objective A for the three generic plant capacities. Refer to Appendix C for a detailed footprint summary of the existing and upgraded systems. The existing secondary footprint includes existing aeration tanks or oxidation ditches and secondary clarifiers.

TABLE 4-6.
ADDITIONAL FOOTPRINT REQUIREMENTS FOR UPGRADING EXTENDED AERATION PLANTS TO ACHIEVE OBJECTIVE A

Plant Design Capacity (mgd)	Additional Area Required for MA Plants (square feet)	Additional Area Required for DA Plants (square feet)
1	1,050	250
10	1,800	300
100	3,300	600

4.2.2 Objective B

Process Description

The upgrade evaluated for achieving Objective B (TIN <3 mg/L) is to convert the existing system into a four-stage Bardenpho activated sludge process. The Bardenpho system consists of a first anoxic tank (pre-anoxic tank), a first aeration tank, a second anoxic tank (post-anoxic tank) and a second aeration tank, as shown in Figure 4-4.

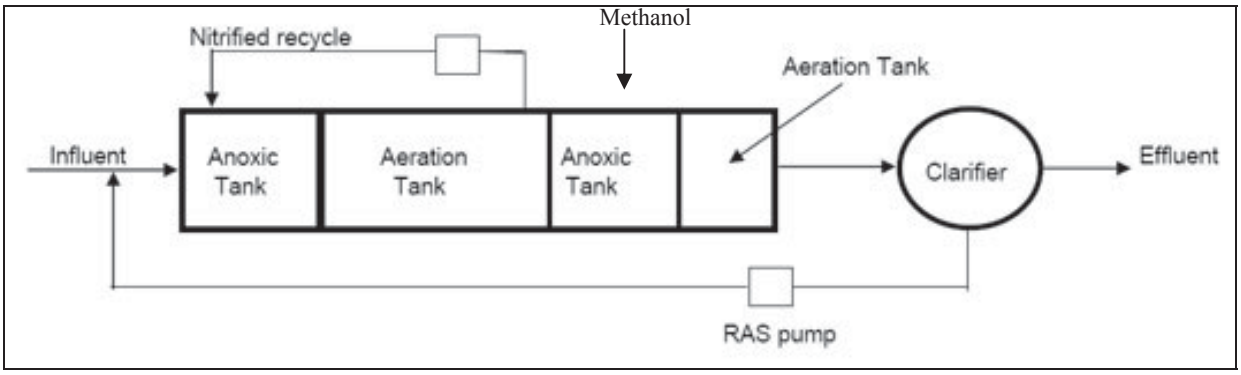

Figure 4-4 Four-Stage Bardenpho Process Flow Schematic

Wastewater enters into the pre-anoxic tank, where nitrate from the first aeration tank and the RAS from the secondary clarifier are recycled. Using carbon present in the raw wastewater, denitrification takes place in this tank by reduction of nitrate, with subsequent release of nitrogen gas. Ammonia in the raw wastewater passes through the pre-anoxic tank and is nitrified in the first aeration tank. A portion of the nitrate produced is recycled to the pre-anoxic tank and the rest of the flow passes to the second anoxic tank. Methanol is added as an additional carbon source in this zone to drive the denitrification process. The second aeration tank aids in stripping the nitrogen gas produced by denitrification in the second anoxic tank and provides a dissolved oxygen residual that improves sludge settleability.

The upgrade to achieve Objective B would consist of partitioning the existing 1.0-MG aeration tank to create a 0.2-MG pre-anoxic tank, a 0.5-MG first aeration tank, a 0.2-MG post-anoxic tank, and a 0.1-MG second aeration tank. Mechanical mixers would be provided in both the pre- and post-anoxic tanks to maintain the mixed liquor in suspension and to prevent dead zones and hydraulic short-circuiting. Methanol storage and dosing systems would be added to provide the needed carbon substrate to drive the denitrification process in the post-anoxic tank. Magnesium hydroxide storage and dosing systems would need to be added to keep the pH of the effluent at or above 6.5. Figure 4-5 shows the upgraded process flow schematic. Table 4-2 summarizes the process design data. Detailed Biowin model reports are in Appendix A.

In the absence of competitive reactions for methanol, the theoretical quantity of methanol required for denitrification is 1.91 pounds of methanol per pound of nitrate-nitrogen converted to nitrogen gas. Because there will be some aerobic biologically mediated oxidation of methanol, an empirical dose of 3.0 pounds of methanol per pound of nitrate-nitrogen converted to nitrogen gas was used for the second anoxic tank. Table 4-7 summarizes the methanol dosage requirements for different flow conditions. To minimize site footprint impacts, a minimum storage capacity of 14 days at the maximum use rate was modeled.

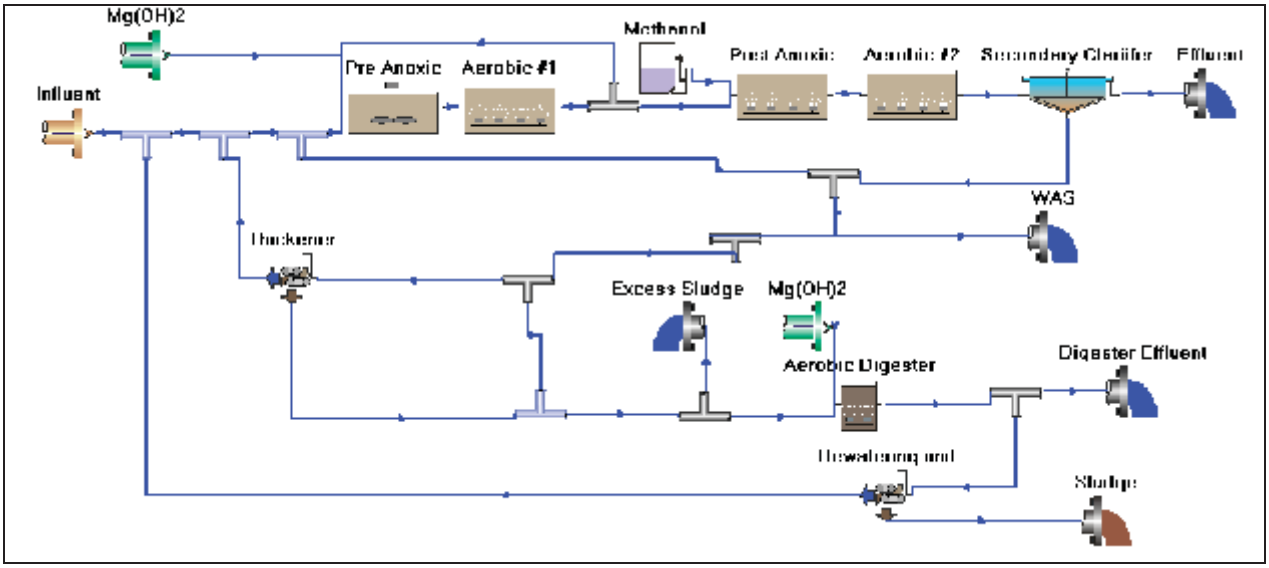

Figure 4-5. Process Schematic of Extended Aeration Plant Upgraded for Objective B Year-Round

TABLE 4-7.
METHANOL DOSAGE CALCULATION

	Flow rate (mgd)	TIN removed (mg/L)	TIN removed (ppd)	Methanol Dosage (lbs per lb of TIN removed)	Methanol Dosage (ppd)	Density of Methanol (lbs/gal)	Methanol dosage (gal/day)
MMWWF	1	5	41.7	3	125.1	6.6	19.0
ADWF	0.5	5	20.9	3	62.6	6.6	9.5
AWWF	0.75	5	31.3	3	93.8	6.6	14.2
MMDWF	0.69	5	28.8	3	86.3	6.6	13.1

Recycled Loads

Sludge wasted from the secondary clarifier will be thickened in a sludge thickener and digested in an aerobic digester. The percentage of TN and TP returning from these sludge treatment processes was calculated using Biowin model outputs. The nutrient recycle loads for Objective B are presented in Table 4-8 and are similar those observed for Objective A.

TABLE 4-8.
NUTRIENT RECYCLING COMPARISON FOR EXTENDED AERATION SYSTEMS, OBJECTIVE B YEAR-ROUND NUTRIENT REMOVAL

	% of TN Recycled		% of TP Recycled	
	AWWF	ADWF	AWWF	ADWF
Existing Plant	18.0%	17.9%	23.9%	23.3%
Objective B Year-Round	17.2%	15.9%	55.7%	61.7%

Sludge Production

From Table 4-2, average sludge produced per day for Objective B year-round is 951 ppd, which is 0.2 percent greater than for the existing plant and 1.2 percent greater than for Objective A. This increase in sludge production is the result of amending the carbon content of the wastewater with methanol to drive the denitrification process. It amounts to 0.37 tons of dry solids per year (0.0016 tons per million gallons of wastewater treated) more than the existing plant and 2.2 tons of sludge per year (0.0096 tons per million gallons of wastewater treated) more than Objective A year-round.

Energy Consumption

The average annual process air required for the upgrades to achieve Objective B year-round is 803 cubic feet per minute (cfm), which is 16 percent less than the existing system (961 cfm). As with Objective A, the overall energy required to achieve Objective B year-round exceeds the existing energy requirements for both MA and DA plants.

MA Plant

Upgrading the MA plant secondary treatment process to achieve Objective B year-round would increase the plant energy requirements by 294,000 kW-hours/year, or about 29 percent, as shown in Table 4-9. There would be no increase in the energy requirements for solids processes. The annual energy consumption for the upgraded plant would increase by about 1,289 kW-hours per million gallons of influent wastewater treated.

TABLE 4-9.
ADDITIONAL ENERGY CONSUMPTION FOR UPGRADING MA PLANT TO ACHIEVE OBJECTIVE B YEAR-ROUND

Yearly Energy Required	
Existing MA Plant	998,500 kW-hours/year
Objective B Year-Round	1,292,500 kW-hours/year
Energy Increase for Upgrade	
Annual Quantity	294,000 kW-hours/year
Percent	29%
Increase per Volume of Plant Flow	1,289 kW-hours/MG

DA Plant

Upgrading the DA plant secondary treatment process to achieve Objective B year-round would increase the plant energy requirements by 442,000 kW-hours/year, or about 52 percent, as shown in Table 4-10. There would be no increase in the energy requirements for solids processes. The annual energy consumption for the upgraded plant would increase by about 1,938 kW-hours per million gallons of influent wastewater treated.

TABLE 4-10.
ADDITIONAL ENERGY CONSUMPTION FOR UPGRADING DA PLANT TO ACHIEVE OBJECTIVE B YEAR-ROUND

Yearly Energy Required	
Existing DA Plant	850,500 kW-hours/year
Objective B Year-Round	1,292,500 kW-hours/year
Energy Increase for Upgrade	
Annual Quantity	442,000 kW-hours/year
Percent	52%
Increase per Volume of Plant Flow	1,938 kW-hours/MG

Chemical Usage

Upgrades to achieve Objective B year-round would require methanol for carbon supplementation and magnesium hydroxide for pH and alkalinity control. The methanol requirement would be approximately 6,400 gallons of methanol per year, or 28 gallons of methanol per million gallons of wastewater treated. Requirements for magnesium hydroxide would be the same as described for Objective A.

Footprint Requirements

No additional tanks are required to convert an existing EA plant to achieve Objective B year-round, but the upgrade would require partitioning of existing aeration tanks. Since the amount of air required for Objective B is less than for the existing system, no additional blowers are required.

An existing MA plant would have to be converted to a DA plant. A new blower building with blowers and process air piping and air diffusion system would need to be installed in the aerobic compartment of the existing aeration tank. The existing ditch rotors would be removed and replaced with fine bubble diffusers.

Table 4-11 compares the additional footprint area required for implementation of Objective B year-round for the three plant capacities. For existing MA plants, additional area is required for the new blower building and the methanol storage and dosing system. For DA plants, additional area is only required for the methanol storage and dosing systems. Refer to Appendix C for a detail summary of the area requirement or existing and upgraded treatment systems. The percent changes in footprint are similar to those for Objective A system as no additional tanks are needed for Objective B.

TABLE 4-11.
ADDITIONAL FOOTPRINT REQUIREMENTS FOR UPGRADING EXTENDED AERATION PLANTS TO ACHIEVE OBJECTIVE B

Plant Design Capacity (mgd)	Additional Area Required for MA Plants (square feet)	Additional Area Required for DA Plants (square feet)
1	1,400	600
10	2,500	1,000
100	6,000	3,300

4.2.3 Objective C

Process Description

Chemical phosphorus removal is achieved by adding chemicals such as alum, poly-aluminum chloride, or ferric chloride to the wastewater at a well-mixed location, followed by flocculation and solids removal. The effluent phosphorus concentration is determined by the dose and other chemical reactions. An effluent of 0.5 to 1 mg/L can typically be achieved without constructing post-secondary treatment facilities such as tertiary clarifiers or filters. The upgrade evaluated to achieve Objective C (TP <1 mg/L) consists of adding alum to precipitate phosphorus removal and magnesium hydroxide for pH control. Figure 4-6 represents the process flow schematic for Objective C. Table 4-2 summarizes the process design data. Detailed Biowin model reports are in Appendix A.

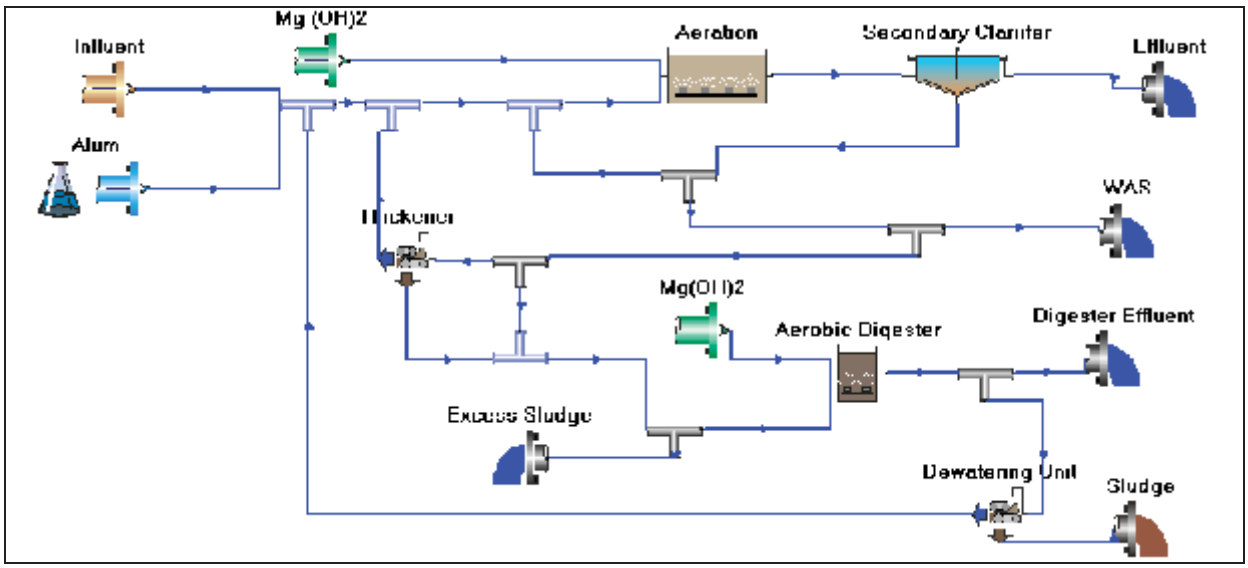

Figure 4-6. Process Schematic of Extended Aeration Plant Upgraded for Objective C Year-Round

Phosphorus is generally present in wastewater as organic and inorganic phosphates. Organic phosphate is bound to plant or animal tissues and is formed primarily by biological process. Inorganic phosphate is not associated with organic material and includes orthophosphate and polyphosphates. Orthophosphate (PO_4^{-3}) is also referred to as "reactive phosphorus" and is the most stable form of phosphate. Polyphosphates, also known as metaphosphates or condensed phosphates, are strong complexing agents for some metal ions. In wastewater, polyphosphates are unstable and eventually are converted to orthophosphate.

Metal salts frequently used for phosphorus removal include aluminum (Al(III)), ferric (Fe(III)) and calcium (Ca(II)). These metal salts can be added in existing treatment plants before a primary clarifier or other solids separation device. Use of these metal salts frequently increases the total dissolved solids content of the final effluent and the salinity of the sludge. Precipitation of phosphorus upstream or in conjunction with the biological treatment process can cause phosphorus to become a growth-limiting nutrient for the biological treatment process if the weight ratio of BOD_5 to phosphate-phosphorus exceeds 100 for SRTs less than 6 days and about 250 for SRTs greater than 12 days.

Aluminum present in alum can combine with phosphate ions to form aluminum phosphate. The reaction of alum with orthophosphate can be written as follows:

$$Al_2(SO_4)_3.14H_20 + 2PO_4^{-3} \rightarrow 2A1PO_4 + 3SO_4^{-2} + 14H_20$$

This reaction indicates that 1 lb-mole of alum (594 pounds) will react with 2 lb-moles (190 pounds) of $2PO_4^{-3}$ containing 62 pounds of phosphorus to form 2 lb-moles (244 pounds) of $AlPO_4$. The weight ratio of alum to phosphorus is therefore 9.58:1. Empirical results at several plants indicate that higher than stoichiometric quantities of alum are necessary to reduce phosphorus concentration below 1 mg/L. The ratios of alum (9.1-percent aluminum) to phosphorous listed in Table 4-12 were considered to be representative of chemical removal of phosphorus from municipal wastewater by alum addition (EPA 1976).

TABLE 4-12.
ALUM TO PHOSPHORUS RATIO FOR PHOSPHORUS REDUCTION

Required P Reduction	Mole Ratios (Aluminum to Phosphorus)	Alum-to-Phosphorus Weight Ratio
75%	1.38 : 1	13:1
85%	1.72 : 1	16:1
95%	2.31 : 1	22:1

These ratios were used to determine the required alum dosage based on the initial phosphate-phosphorus concentration of the wastewater. For example, to achieve 85-percent phosphorus removal from wastewater containing 11 mg/L of influent phosphorus, the alum dosage needed would be

11 * [Alum : P wt ratio (16:1 @ 85%)] = 176 mg/L or 1,470 lb/MG

Alum dosage required in gallons per day was calculated for all wet and dry weather flow conditions based on the concentration of soluble phosphate present in each reactor (i.e., aeration basin compartment) as determined from the Biowin model. Phosphorus reduction rates at different flow conditions were calculated using the aeration tank soluble phosphate as the influent value and a total phosphorus objective (1 mg/L) as the effluent value. The reduction rates ranged from 75 to 85 percent. In order to simplify the calculations, the following mole ratios were used:

- A mole ratio of 1.5 for 75 to 85 percent removal
- A mole ratio of 2.0 for 85 to 95 percent removal
- A mole ratio of 2.3 for >95 percent removal

Table 4-13 summarizes alum dosages at wet and dry weather flow conditions.

The calculated alum dosages were used in Biowin to determine the final effluent TP concentration. In most cases, the effluent TP concentration calculated by Biowin was less than 1 mg/L. Since the Al: P mole ratios were approximated, the Biowin dosages for some model runs varied slightly from the calculated dosages. Table 4-2 summarizes the alum dosage numbers used in the Biowin model at different flow conditions.

Addition of alum to wastewater lowers the pH of the wastewater due to neutralization of alkalinity and release of carbon dioxide. Dissolved aluminum in excess of the amount required to precipitate phosphorus is generally precipitated concurrently with aluminum hydroxide. The extent of pH reduction will depend on the initial alkalinity of the wastewater. The higher the alkalinity, the less is the reduction in pH for a given alum dosage. For this study, it is assumed that magnesium hydroxide would be used for supplemental alkalinity if needed to maintain the pH of the wastewater at or above.

TABLE 4-13.
REQUIRED ALUM DOSAGE FOR OBJECTIVE C PHOSPHORUS REDUCTION

Flow rate (a)	Soluble PO_4 in Aeration Tank (b)	Final Effluent Phosphorus (c)	Removal Rate (d)=((b-c)/b)	Mole Ratio (e)	Alum Dosage Required: In mg/L (f = b*d*e* 9.58)	Alum Dosage Required: In ppd (g = a* f* 8.34)	Alum Dosage Required: In gpd (= g/(11.14*0.48))
ADWF (0.5 mgd)	8.46 mg/L	1 mg/L	88.18%	2	142.9 mg/L	596 ppd	111.0 gpd
AWWF (0.75 mgd)	5.64 mg/L	1 mg/L	82.27%	1.5	66.7 mg/L	417 ppd	77.7 gpd
MMWWF (1.0 mgd)	4.2 mg/L	1 mg/L	76.19%	1.5	46.0 mg/L	384 ppd	71.4 gpd
MMDWF (0.69 mgd)	6.15 mg/L	1 mg/L	83.74%	1.5	74.0 mg/L	426 ppd	79.3 gpd

Note:

Alum is available as liquid hydrated alum solution that consists of 48.2% by weight alum. The density of liquid alum is 11.14 lbs/gallon.

Alum concentration (mg/L) = (0.482 * alum dosage gal/d * alum density lbs/gal)/(flow * 8.34)

Recycled Loads

Sludge wasted from the secondary clarifier will be thickened in a sludge thickener and then digested in an aerobic digester. The percentage of TN and TP returning from these sludge treatment processes was calculated using Biowin model outputs. Table 4-14 summarizes the results. Chemical phosphorus removal nearly doubles the quantity of phosphorus recycled from solids processing operations, however this phosphorus recycle is associated with the increased phosphorus content of the solids and not due to an increase in phosphate.

TABLE 4-14.
NUTRIENT RECYCLING COMPARISON FOR EXTENDED AERATION SYSTEMS, OBJECTIVE C YEAR-ROUND NUTRIENT REMOVAL

	% of TN Recycled		% of TP Recycled	
	AWWF	ADWF	AWWF	ADWF
Existing Plant	18.0%	17.9%	23.9%	23.3%
Objective C Year-Round	18.0%	17.9%	44.9%	46.8%

Sludge Production

Chemical phosphorus removal used to achieve Objective C on a year-round basis increases sludge production relative to the existing plant by 27 percent, or an additional 46 tons of dry solids per year (0.2 tons per million gallons treated). This increase is the result of the chemical precipitation of phosphorus as aluminum phosphate and aluminum hydroxide.

Energy Consumption

Biowin modeling results indicate the process air requirements for the upgraded plant to achieve Objective C year-round would be about 1 percent less than for the existing system; this is not considered

significant for this level of analysis. The overall energy requirements would be slightly higher due to the operation of chemical dosing pumps and rapid mixing systems as well as extended operating time for solids thickening and dewatering systems.

MA Plant

Upgrading the MA plant secondary treatment process to achieve Objective C year-round would increase the plant energy requirements by 10,500 kW-hours/year, or about 1 percent, as shown in Table 4-15. More than 95 percent of this increase would be attributable to the operation of the solids processes associated with achieving Objective C. The annual energy consumption for the upgraded plant would increase by about 46 kW-hours per million gallons of influent wastewater treated.

TABLE 4-15.
ADDITIONAL ENERGY CONSUMPTION FOR UPGRADING MA PLANT TO ACHIEVE OBJECTIVE C YEAR-ROUND

Yearly Energy Required	
Existing MA Plant	998,500 kW-hours/year
Objective C Year-Round	1,009,000 kW-hours/year
Energy Increase for Upgrade	
Annual Quantity	10,500 kW-hours/year
Percent	1.1%
Increase per Volume of Plant Flow	46 kW-hours/MG

DA Plant

Upgrading the DA plant secondary treatment process to achieve Objective C year-round would increase the plant energy requirements by 10,500 kW-hours/year, or about 1 percent, as shown in Table 4-16. More than 95 percent of this increase would be attributable to the operation of the solids processes associated with achieving Objective C. The annual energy consumption for the upgraded plant would increase by about 46 kW-hours per million gallons of influent wastewater treated.

TABLE 4-16.
ADDITIONAL ENERGY CONSUMPTION FOR UPGRADING DA PLANT TO ACHIEVE OBJECTIVE C YEAR-ROUND

Yearly Energy Required	
Existing DA Plant	850,500 kW-hours/year
Objective C Year-Round	861,000 kW-hours/year
Energy Increase for Upgrade	
Annual Quantity	10,500 kW-hours/year
Percent	1.2%
Increase per Volume of Plant Flow	46 kW-hours/MG

Chemical Usage

Existing MA plants that would be upgraded to achieve Objective C year-round would require approximately 188 gallons of alum and an additional 184 gallons of magnesium hydroxide per million gallons of influent wastewater treated.

Existing DA plants that would be upgraded to achieve Objective C year-round would require approximately 188 gallons of alum and an additional 72 gallons of magnesium hydroxide per million gallons of influent wastewater treated.

Footprint Requirements

New structures required for Objective C would be required for alum and magnesium hydroxide chemical storage tanks and feeding systems. These storage tanks would be sized to maintain at least two weeks of chemical storage based on the maximum chemical consumption rate. It is assumed that for smaller plants, 55-gallon drums or 250- to 400-gallon totes would be used. For larger plants, HDPE tanks or FRP tanks would be required.

Table 4-17 summarizes the approximate additional area required for constructing the alum and magnesium hydroxide storage tanks and feeding systems for the Objective C upgrade. The only change in footprint is the required area for chemical storage tanks. Refer to Appendix C for a detailed footprint summary of the existing and upgraded systems.

TABLE 4-17.
ADDITIONAL FOOTPRINT REQUIREMENTS FOR UPGRADING EXTENDED AERATION PLANTS TO ACHIEVE OBJECTIVE C

Plant Design Capacity (mgd)	Additional Area Required for MA Plants (square feet)	Additional Area Required for DA Plants (square feet)
1	500	500
10	2,000	2,000
100	11,000	11,000

4.2.4 Objective D

Process Description

The upgrade evaluated to achieve Objective D (TP <0.1 mg/L) is to add tertiary filters after the secondary clarifier as shown Figure 4-7. Tertiary filtration polishes effluent phosphorus to achieve greater reliability and reduces phosphorus to lower limits. Table 4-2 summarizes the process design data. Detailed Biowin model reports are in Appendix A.

Gravity deep bed media filtration involves the removal of particulate material suspended in a liquid by passing the liquid through a filter bed made of a granular or compressible filter medium. Conventional and continuously backwashing up-flow filtration systems have proven effective in removing suspended solids from wastewater biological and chemical treatment process effluent to reduce the mass of solids in the effluent. Chemical precipitation followed by gravity clarification followed by single-stage filtration can reliably remove TP to less than 0.1 mg/L; two-stage filtration can reliably achieve TP concentrations of less than 0.05 mg/L.

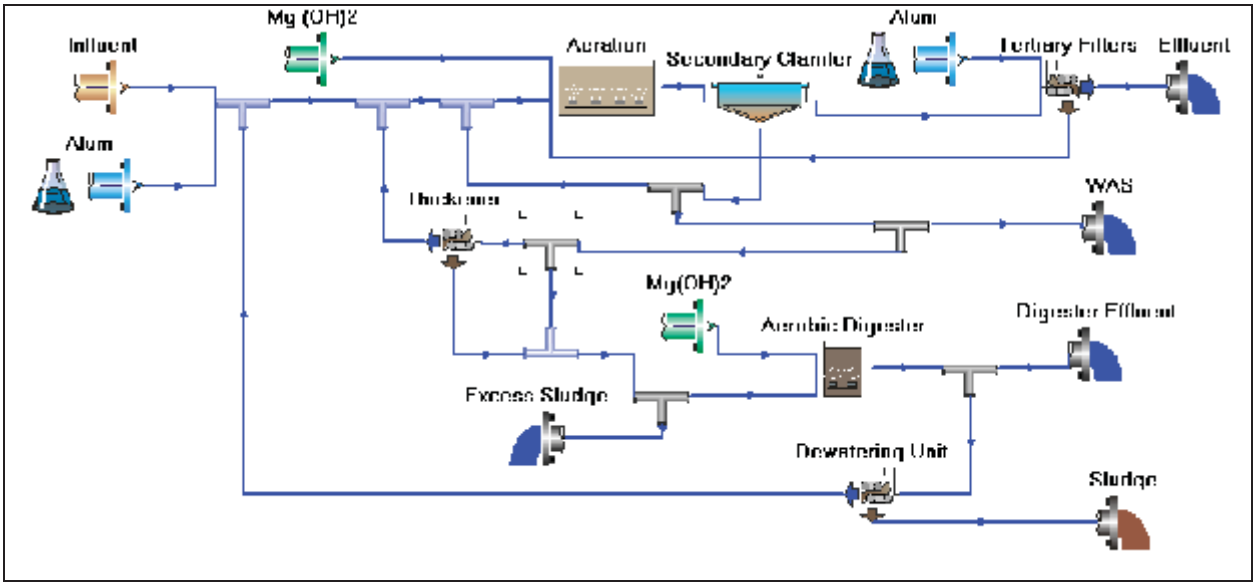

Figure 4-7. Process Schematic of Extended Aeration Plant Upgraded for Objective D Year-Round

To achieve Objective D, alum would be applied as described for Objective C and additionally to the clarified wastewater feed to the filters. Continuous backwash filters were modeled with the dirty backwash from the filters recycled to the head of the plant. Biowin results confirm that effluent total phosphorus concentration of less than 0.1 mg/L would be achieved. As discussed for Objective C, alum dosage requirements were initially computed stochiometrically and applied to the Biowin model. Table 4-18 summarizes the alum dosage requirements for Objective D. As described for Objective C, the mole ratio of aluminum to phosphorus for a removal rate greater than 95 percent is 2.3; the Biowin results indicate that a stoichiometric ratio of 2.3 is not adequate to achieve 98-percent or greater removal. Table 4-2 summarizes the alum dosages applied to the Biowin model at different flow conditions.

TABLE 4-18.
REQUIRED ALUM DOSAGE FOR OBJECTIVE D PHOSPHORUS REDUCTION

Flow rate (a)	Soluble PO_4 in Aeration Tank (b)	Final Effluent Phosphorus (c)	Removal Rate (d)=((b-c)/b)	Mole Ratio (d)	Alum Dosage Required: In mg/L (f = b*d*e* 9.58)	Alum Dosage Required: In ppd (g = a*f*8.34)	Alum Dosage Required: In gpd (=g/(11.14*0.482))
ADWF (0.5 mgd)	8.46 mg/L	0.1 mg/L	98.82%	2.3	184.2 mg/L	768 ppd	143.1 gpd
AWWF (0.75 mgd)	5.64 mg/L	0.1 mg/L	98.23%	2.3	122.1 mg/L	764 ppd	142.2 gpd
MMWWF (1.0 mgd)	4.2 mg/L	0.1 mg/L	97.62%	2.3	90.3 mg/L	753 ppd	140.3 gpd
MMDWF (0.69 mgd)	6.15 mg/L	0.1 mg/L	98.37%	2.3	133.3 mg/L	767 ppd	142.9 gpd

Recycled Loads

Sludge wasted from the secondary clarifier will be thickened in a sludge thickener and digested in an aerobic digester. The percentage of TN and TP returning from these sludge treatment processes was calculated using Biowin model outputs. Table 4-19 summarizes the results.

TABLE 4-19.
NUTRIENT RECYCLING COMPARISON FOR EXTENDED AERATION SYSTEMS, OBJECTIVE D YEAR-ROUND NUTRIENT REMOVAL

	% of TN Recycled		% of TP Recycled	
	AWWF	ADWF	AWWF	ADWF
Existing Plant	18.0%	17.9%	23.9%	23.3%
Objective D Year-Round	18.2%	18.3%	49.0%	36.8%

Sludge Production

Chemical phosphorus removal used to achieve Objective D year-round will increase the mass of sludge produced by 32 percent on an annual basis, adding 56 tons of dry solids per year (0.25 tons per million gallons of wastewater treated). This increase in sludge is the result of the chemical precipitation of phosphorus as aluminum phosphate and aluminum hydroxide.

Energy Consumption

Biowin modeling results indicate the process air requirements for the upgraded plant to achieve Objective D year-round would be about 1 percent less than the existing system; this is not considered significant for this level of analysis. The overall energy requirements would be higher than for Objective C due to the extended operation of chemical (alum and magnesium hydroxide) dosing pumps, rapid mixing systems, filtration system, as well as extended operating time for solids thickening and dewatering systems.

MA Plant

Upgrading the MA plant secondary treatment process to achieve Objective D year-round would increase the plant energy requirements by 36,500 kW-hours/year, or about 4 percent, as shown in Table 4-20. About 80 percent of this increase would be attributable to the operation of the solids processes associated with achieving Objective D, with the remainder mostly attributable to the operation of the filters. The annual energy consumption for the upgraded plant would increase by about 160 kW-hours per million gallons of influent wastewater treated.

TABLE 4-20.
ADDITIONAL ENERGY CONSUMPTION FOR UPGRADING MA PLANT TO ACHIEVE OBJECTIVE D YEAR-ROUND

Yearly Energy Required	
Existing MA Plant	998,500 kW-hours/year
Objective D Year-Round	1,035,000 kW-hours/year
Energy Increase for Upgrade	
Annual Quantity	36,500 kW-hours/year
Percent	4%
Increase per Volume of Plant Flow	160 kW-hours/MG

DA Plant

Upgrading the DA plant secondary treatment process to achieve Objective D year-round would increase the plant energy requirements by 42,500 kW-hours/year, or about 5 percent, as shown in Table 4-21. About 80 percent of this increase would be attributable to the operation of the solids processes associated with achieving Objective D, with the remainder mostly attributable to the operation of the filters. The annual energy consumption for the upgraded plant would increase by about 184 kW-hours per million gallons of influent wastewater treated.

TABLE 4-21.
ADDITIONAL ENERGY CONSUMPTION FOR UPGRADING DA PLANT TO ACHIEVE OBJECTIVE D YEAR-ROUND

Yearly Energy Required	
Existing DA Plant	850,500 kW-hours/year
Objective D Year-Round	892,500 kW-hours/year
Energy Increase for Upgrade	
Annual Quantity	42,500 kW-hours/year
Percent	5%
Increase per Volume of Plant Flow	184 kW-hours/MG

Chemical Usage

Existing MA plants upgraded to achieve Objective D year-round would require approximately 260 gallons of alum per million gallons treated and an additional 256 gallons of magnesium hydroxide per million gallons treated.

Existing DA plants upgraded to achieve Objective D year-round would require approximately 260 gallons of alum per million gallons treated and an additional 144 gallons of magnesium hydroxide per million gallons treated.

Footprint Requirements

New structures required for Objective D are the filters and the alum and magnesium hydroxide storage tanks and dosing facilities, similar to those identified for Objective C. Appendix B provides detailed storage tank calculations and dosing system requirements.

Table 4-22 summarizes the additional footprint requirements to achieve Objective D relative to the existing system. Refer to Appendix C for a detailed footprint summary of the existing and upgraded systems.

TABLE 4-22.
ADDITIONAL FOOTPRINT REQUIREMENTS FOR UPGRADING EXTENDED AERATION PLANTS TO ACHIEVE OBJECTIVE D

Plant Design Capacity (mgd)	Additional Area Required for MA Plants (square feet)	Additional Area Required for DA Plants (square feet)
1	1,400	1,400
10	11,000	11,000
100	97,000	97,000

4.2.5 Objective E

Process Description

Objective E (TIN <8 mg/L and TP <1 mg/L) can be achieved by converting the existing extended aeration system to the MLE process as described for Objective A and by adding alum to the influent for phosphorus removal as described for Objective C. Alum dosages were calculated for soluble PO_4 concentrations in the aeration tank based on the Objective A model. These alum dosages were then entered into the Biowin model to achieve effluent TP <1 mg/L. Assumptions made for Objectives A and C were also used for this objective. Table 4-2 summarizes the process design data. Detailed Biowin model reports are in Appendix A.

Recycled Loads

Sludge wasted from the secondary clarifier will be thickened in a sludge thickener and digested in an aerobic digester. The percentage of TN and TP returning from these sludge treatment processes was calculated using Biowin model outputs. Table 4-23 summarizes the results.

TABLE 4-23.
NUTRIENT RECYCLING COMPARISON FOR EXTENDED AERATION SYSTEMS, OBJECTIVE E YEAR-ROUND NUTRIENT REMOVAL

	% of TN Recycled		% of TP Recycled	
	AWWF	ADWF	AWWF	ADWF
Existing Plant	18.0%	17.9%	23.9%	23.3%
Objective E Year-Round	18.0%	15.2%	35.9%	50.4%

Sludge Production

Chemical phosphorus removal used to achieve Objective E year-round will increase the mass of sludge produced by 24 percent on an annual basis, adding 41.7 tons of dry solids per year (0.18 tons per million gallons treated). This increase in sludge production is the result of chemical precipitation of phosphorus as aluminum phosphate and aluminum hydroxide.

Energy Consumption

Biowin modeling results indicate the process air requirements for the upgraded plant to achieve Objective E year-round would be about 18 percent less than the existing system. The overall energy requirements would be higher due to the operation of anoxic basin mixing systems, internal mixed liquor recycle pumps, chemical (methanol, alum and magnesium hydroxide) dosing pumps, and rapid mixing systems, as well as extended operating time for solids thickening and dewatering systems.

MA Plant

Upgrading the MA plant secondary treatment process to achieve Objective E year-round would increase the plant energy requirements by 23,500 kW-hours/year, or about 2 percent, as shown in Table 4-24. About 50 percent of this increase would be attributable to the operation of the solids processes associated with achieving Objective E, with the remainder mostly attributable to the operation of the liquid process. The annual energy consumption for the upgraded plant would increase by about 103 kW-hours per million gallons of influent wastewater treated. This energy increase is significantly lower than required to upgrade a DA plant for Objective E year-round, because of the energy savings achieved by converting the MA system to a DA system.

TABLE 4-24.
ADDITIONAL ENERGY CONSUMPTION FOR UPGRADING MA PLANT TO ACHIEVE OBJECTIVE E YEAR-ROUND

Yearly Energy Required	
Existing MA Plant	998,500 kW-hours/year
Objective E Year-Round	1,022,000 kW-hours/year
Energy Increase for Upgrade	
Annual Quantity	23,500 kW-hours/year
Percent	2%
Increase per Volume of Plant Flow	103 kW-hours/MG

DA Plant

Upgrading the DA plant secondary treatment process to achieve Objective E year-round would increase the plant energy requirements by 171,500 kW-hours/year, or about 20 percent, as shown in Table 4-25. About 6.5 percent of this increase would be attributable to the operation of the solids processes associated with achieving Objective E, with the remainder mostly attributable to the operation of the liquid process. The annual energy consumption for the upgraded plant would increase by about 752 kW-hours per million gallons of influent wastewater treated.

Chemical Usage

Alum and magnesium hydroxide would be required to reduce total phosphorus to <1.0 mg/L and to maintain adequate alkalinity and pH for nitrification.

An MA plant upgraded to achieve Objective E year-round would require approximately 188 gallons of alum per million gallons treated and an additional 80 gallons of magnesium hydroxide per million gallons treated.

TABLE 4-25.
ADDITIONAL ENERGY CONSUMPTION FOR UPGRADING DA PLANT TO ACHIEVE OBJECTIVE E YEAR-ROUND

Yearly Energy Required	
Existing DA Plant	850,500 kW-hours/year
Objective E Year-Round	1,022,000 kW-hours/year
Energy Increase for Upgrade	
Annual Quantity	171,500 kW-hours/year
Percent	20%
Increase per Volume of Plant Flow	752 kW-hours/MG

A DA plant upgraded to achieve Objective E year-round would require approximately 188 gallons of alum per million gallons treated and 32 gallons less magnesium hydroxide per million gallons treated than required for the existing plant.

Footprint Requirements

New structures required for Objective E are alum and magnesium hydroxide storage tanks and dosing systems, which would require use of additional area as indicated for Objective C and as shown in Table 4-26.

TABLE 4-26.
ADDITIONAL FOOTPRINT REQUIREMENTS FOR UPGRADING EXTENDED AERATION PLANTS TO ACHIEVE OBJECTIVE E

Plant Design Capacity (mgd)	Additional Area Required for MA Plants (square feet)	Additional Area Required for DA Plants (square feet)
1	1,700	900
10	3,600	2,100
100	12,700	10,000

4.2.6 Objective F

Process Description

Objective F (TIN <3 mg/L and TP <0.1 mg/L) can be achieved by converting the existing extended aeration system into a four-stage Bardenpho (4BDP) process as described for Objective B and by installing tertiary filters and alum addition as discussed in Objective D. Alum dosages were calculated for soluble PO_4 concentrations in the aeration tank based on the Objective B model. These alum dosages were then entered into the Biowin model to achieve effluent TP <0.1 mg/L. Assumptions made for Objectives B and D were also used for this objective. Table 4-2 summarizes the process design data. Detailed Biowin model reports are in Appendix A.

Recycled Loads

Sludge wasted from the secondary clarifier will be thickened in a sludge thickener and digested in an aerobic digester. The percentage of TN and TP returning from these sludge treatment processes was calculated using Biowin model outputs. Table 4-27 summarizes the results.

TABLE 4-27.
NUTRIENT RECYCLING COMPARISON FOR EXTENDED AERATION SYSTEMS, OBJECTIVE F YEAR-ROUND NUTRIENT REMOVAL

	% of TN Recycled		% of TP Recycled	
	AWWF	ADWF	AWWF	ADWF
Existing Plant	18.0%	17.9%	23.9%	23.3%
Objective F Year-Round	16.5%	15.3%	36.5%	36.6%

Sludge Production

Chemical phosphorus removal used to achieve Objective F year-round will increase the mass of sludge produced by 30 percent on an annual basis, adding 53 tons of dry solids per year (0.23 tons per million gallons treated). This increase in sludge is the result of the chemical precipitation of phosphorus as aluminum phosphate and aluminum hydroxide.

Energy Consumption

Biowin modeling results indicate the process air requirements for the upgraded plant to achieve Objective F year-round would be about 14 percent less than the existing system. However, overall energy consumption would be significantly greater than for the existing plant, due to the operation of anoxic basin mixing systems, internal mixed liquor recycle pumps, chemical (methanol, alum and magnesium hydroxide) dosing pumps, rapid mixing and filtration systems, as well as extended operating time for solids thickening and dewatering systems.

MA Plant

Upgrading the MA plant secondary treatment process to achieve Objective F year-round would increase the plant energy requirements by 319,000 kW-hours/year, or about 32 percent, as shown in Table 4-28. About 5.6 percent of this increase would be attributable to the operation of the solids processes associated with achieving Objective F, with the remainder attributable to the operation of the liquid process. The annual energy consumption for the upgraded plant would increase by about 1,319 kW-hours per million gallons of influent wastewater treated.

DA Plant

Upgrading the DA plant secondary treatment process to achieve Objective F year-round would increase the plant energy requirements by 467,000 kW-hours/year, or about 55 percent, as shown in Table 4-29. About 3.8 percent of this increase would be attributable to the operation of the solids processes associated with achieving Objective F, with the remainder attributable to the operation of the liquid process. The annual energy consumption for the upgraded plant would increase by about 2,047 kW-hours per million gallons of influent wastewater treated.

TABLE 4-28.
ADDITIONAL ENERGY CONSUMPTION FOR UPGRADING MA PLANT TO ACHIEVE OBJECTIVE F YEAR-ROUND

Yearly Energy Required	
Existing MA Plant	998,500 kW-hours/year
Objective F Year-Round	1,317,500 kW-hours/year
Energy Increase for Upgrade	
Annual Quantity	319,000 kW-hours/year
Percent	32%
Increase per Volume of Plant Flow	1,319 kW-hours/MG

TABLE 4-29.
ADDITIONAL ENERGY CONSUMPTION FOR UPGRADING DA PLANT TO ACHIEVE OBJECTIVE F YEAR-ROUND

Yearly Energy Required	
Existing DA Plant	850,500 kW-hours/year
Objective F Year-Round	1,317,500 kW-hours/year
Energy Increase for Upgrade	
Annual Quantity	467,000 kW-hours/year
Percent	55%
Increase per Volume of Plant Flow	2,047 kW-hours/MG

Chemical Usage

Three new chemical storage and dosing systems would be required to achieve Objective F year-round. Alum and magnesium hydroxide would be required to reduce total phosphorus to <1.0 mg/L and to maintain adequate alkalinity and pH for nitrification. Methanol or an equivalent carbon source would be required to drive the denitrification process as described for Objective B.

For upgraded MA plants to achieve Objective F year-round would require approximately 256 gallons of alum, an additional 136 gallons of magnesium hydroxide, and 32 gallons methanol per million gallons treated.

For upgraded DA plants to achieve Objective F year-round would require approximately 256 gallons of alum, an additional 24 gallons of magnesium hydroxide, and 32 gallons methanol per million gallons treated.

Footprint Requirements

New structures required for Objective F are alum, magnesium hydroxide and methanol storage tanks. These tanks were sized as described for Objectives B and D, with the following sizes estimated for a 1-mgd plant (Appendix B provides detailed storage tank calculations for other plant capacities):

- Two alum storage tanks are required, each 8 feet deep and 5.2 feet in diameter.
- Two magnesium hydroxide storage tanks are required, each 8 feet deep and 4.5 feet in diameter.

- A 3-foot-deep, 120-square-foot containment tank is required for the alum storage tank.
- A 2.6-foot-deep, 95-square-foot containment tank is required for the magnesium hydroxide storage tank.
- One horizontal methanol tank is required, 4 feet in diameter and 5.1 feet long.
- A 45-square-foot containment tank is required to contain the methanol tank.

Table 4-30 summarizes the footprint requirements between the existing system and Objective F upgrade. Refer to Appendix C for a detailed footprint summary of the existing and upgraded systems.

TABLE 4-30.
ADDITIONAL FOOTPRINT REQUIREMENTS FOR UPGRADING EXTENDED AERATION PLANTS TO ACHIEVE OBJECTIVE F

Plant Design Capacity (mgd)	Additional Area Required for MA Plants (square feet)	Additional Area Required for DA Plants (square feet)
1	2,700	1,900
10	13,500	12,000
100	98,000	98,000

4.3 SEASONAL NUTRIENT REMOVAL

Improvements required to provide seasonal nutrient removal to achieve each treatment objective are described below. Process design data for all objectives are included in Table 4-31, which is attached at the end of this chapter.

4.3.1 Objective A

Process Description

The Objective A (TIN <8 mg/L) treatment processes for seasonal nutrient removal would be the same as for year-round nutrient removal except that the capital facilities would be designed based on MMDWF instead of MMWWF and O&M costs would be based on ADWF instead of AWWF. No additional aeration tanks or oxygen transfer systems are required for nutrient removal. Chemical storage tanks would be designed based on maximum usage of chemical during either MMDWF or ADWF. Refer to Section 4.2.1 for detailed process description and flow schematics. Process design data are included in Table 4-31.

Recycled Loads

Sludge wasted from the secondary clarifier will be thickened in a sludge thickener and digested in an aerobic digester. The percentage of TN and TP returning from these sludge treatment processes was calculated using Biowin model outputs. Table 4-32 summarizes the results.

TABLE 4-32.
NUTRIENT RECYCLING COMPARISON FOR EXTENDED AERATION SYSTEMS, OBJECTIVE A SEASONAL NUTRIENT REMOVAL

	% of TN Recycled (ADWF)	% of TP Recycled (ADWF)
Existing Plant	17.9%	23.3%
Objective A Seasonal	15.5%	64.1%

Sludge Production

From Table 4-31, average sludge produced per day is 949 pounds per day (ppd) for the existing extended aeration system and 943 ppd for seasonal treatment under Objective A. This increase in sludge production associated with achieving Objective A is not significant; there should be no significant change in the overall mass of sludge produced.

Energy Consumption

MA Plant

Upgrading the MA plant secondary treatment process to achieve Objective A seasonally would reduce the plant energy requirements by 60,000 kW-hours/year, or about 6.4 percent, as shown in Table 4-33. There would be no change in the energy requirements for solids processes. The annual energy consumption for the upgraded plant would decrease by about 263 kW-hours per million gallons of influent wastewater treated. This energy savings is attributable to the upgrade in the aeration process from MA to DA.

TABLE 4-33.
ADDITIONAL ENERGY CONSUMPTION FOR UPGRADING MA PLANT TO ACHIEVE OBJECTIVE A SEASONALLY

Yearly Energy Required	
Existing MA Plant	998,500 kW-hours/year
Objective A, Seasonal	938,500 kW-hours/year
Energy Increase for Upgrade	
Annual Quantity	(60,000) kW-hours/year
Percent	(6.4%)
Increase per Volume of Plant Flow	(263) kW-hours/MG

DA Plant

Upgrading the DA plant secondary treatment process to achieve Objective A seasonally would increase the plant energy requirements by 88,000 kW-hours/year, or about 10.3 percent, as shown in Table 4-34. There would be no increase in the energy requirements for solids processes. The annual energy consumption for the upgraded plant would increase by about 386 kW-hours per million gallons of influent wastewater treated. There would be no change in the energy requirements for solids processes. On an annual basis, seasonal operation requires approximately 55 percent of the increased energy required to achieve Objective A year-round.

TABLE 4-34.
ADDITIONAL ENERGY CONSUMPTION FOR UPGRADING DA PLANT TO ACHIEVE OBJECTIVE A SEASONALLY

Yearly Energy Required	
Existing DA Plant	850,500 kW-hours/year
Objective A, Seasonal	938,500 kW-hours/year
Energy Increase for Upgrade	
Annual Quantity	88,000 kW-hours/year
Percent	10.3%
Increase per Volume of Plant Flow	386 kW-hours/MG

Chemical Usage

If an existing MA plant is operated to achieve Objective A during dry weather and to maintain existing plant performance during the wet season, then the annual quantity of magnesium hydroxide required to control alkalinity would increase 150% relative to the existing annual usage; this equates to an incremental increase of 48 gallons of magnesium hydroxide per million gallons of wastewater treated annually.

If an existing DA plant is operated to achieve Objective A during dry weather and to maintain existing plant performance during the wet season, then the annual quantity of magnesium hydroxide required to control alkalinity would be reduced approximately 65% relative to the existing annual usage; this equates to an incremental decrease of 64 gallons of magnesium hydroxide per million gallons of wastewater treated annually.

Footprint Requirements

Space requirements to accommodate new process equipment needed to achieve Objective E on a seasonal basis would be the same as described for achieving this objective year-round, as indicated in Table 4-6.

4.3.2 Objective B

Process Description

The Objective B (TIN <3 mg/L) treatment processes for seasonal nutrient removal would be the same as for year-round nutrient removal except that the capital facilities would be designed based on MMDWF instead of MMWWF and O&M costs would be based on ADWF instead of AWWF. No additional aeration tanks are required for nutrient removal. Chemical storage tanks would be designed based on maximum usage of chemical during either MMDWF or ADWF. Refer to Section 4.2.2 for detailed process description and flow schematics. Process design data are included in Table 4-31.

Recycled Loads

Sludge wasted from the secondary clarifier will be thickened in a sludge thickener and digested in an aerobic digester. The percentage of TN and TP returning from these sludge treatment processes was calculated using Biowin model outputs. Table 4-35 summarizes the results.

TABLE 4-35.
NUTRIENT RECYCLING COMPARISON FOR EXTENDED AERATION SYSTEMS, OBJECTIVE B SEASONAL NUTRIENT REMOVAL

	% of TN Recycled (ADWF)	% of TP Recycled (ADWF)
Existing Plant	17.9%	23.3%
Objective B Seasonal	15.9%	61.7%

Sludge Production

From Table 4-31, average sludge produced per day for Objective B seasonal nutrient removal is 953 ppd, which is 0.3 percent higher than for the existing plant. This increase in sludge is the result of the addition of methanol to the post-anoxic tank for denitrification. If Objective B is achieved only during dry weather, then the annual sludge production would increase 0.32 percent on an annual basis, adding 0.55 tons of dry solids per year (0.0024 tons per million gallons of wastewater treated).

Energy Consumption

MA Plant

Upgrading the MA plant secondary treatment process to achieve Objective B seasonally would increase the plant energy requirements by 44,000 kW-hours/year, or about 4 percent, as shown in Table 4-36. There would be no change in the energy requirements for solids processes. The annual energy consumption for the upgraded plant would increase by about 193 kW-hours per million gallons of influent wastewater treated. On an annual basis, seasonal operation requires approximately 15 percent of the increased energy required to achieve Objective B year-round.

TABLE 4-36.
ADDITIONAL ENERGY CONSUMPTION FOR UPGRADING MA PLANT TO ACHIEVE OBJECTIVE B SEASONALLY

Yearly Energy Required	
Existing MA Plant	998,500 kW-hours/year
Objective B, Seasonal	1,042,500 kW-hours/year
Energy Increase for Upgrade	
Annual Quantity	44,000 kW-hours/year
Percent	4%
Increase per Volume of Plant Flow	193 kW-hours/MG

DA Plant

Upgrading the DA plant secondary treatment process to achieve Objective B seasonally would increase the plant energy requirements by 192,000 kW-hours/year, or about 23 percent, as shown in Table 4-37. There would be no increase in the energy requirements for solids processes. The annual energy consumption for the upgraded plant would increase by about 835 kW-hours per million gallons of influent wastewater treated. There would be no change in the energy requirements for solids processes. On an annual basis, seasonal operation requires approximately 43 percent of the increased energy required to achieve Objective B year-round.

TABLE 4-37.
ADDITIONAL ENERGY CONSUMPTION FOR UPGRADING DA PLANT TO ACHIEVE OBJECTIVE B SEASONALLY

Yearly Energy Required	
Existing DA Plant	850,500 kW-hours/year
Objective B, Seasonal	1,042,500 kW-hours/year
Energy Increase for Upgrade	
Annual Quantity	192,000 kW-hours/year
Percent	23%
Increase per Volume of Plant Flow	835 kW-hours/MG

Chemical Usage

To achieve Objective B nutrient removal on a seasonal basis, the annual methanol requirement would be approximately 3,650 gallons or 16 gallons of methanol per million gallons of wastewater treated. Use of magnesium hydroxide for pH and alkalinity control would be the same as for Objective A seasonal nutrient removal.

Footprint Requirements

Space requirements to accommodate new process equipment needed to achieve Objective B on a seasonal basis would be the same as described for achieving this objective year-round as indicated in Table 4-11.

4.3.3 Objective C

Process Description

The Objective C (TP <1 mg/L) treatment processes for seasonal nutrient removal would be the same as for year-round nutrient removal except that the capital facilities would be designed based on MMDWF instead of MMWWF and O&M costs would be based on ADWF instead of AWWF. No additional aeration tanks are required for nutrient removal. Chemical storage tanks would be designed based on maximum usage of chemical during either MMDWF or ADWF. Refer to Section 4.2.3 for detailed process description and flow schematics. Process design data are included in Table 4-31.

Recycled Loads

Sludge wasted from the secondary clarifier will be thickened in a sludge thickener and digested in an aerobic digester. The percentage of TN and TP returning from these sludge treatment processes was calculated using Biowin model outputs. Table 4-38 summarizes the results.

TABLE 4-38.
NUTRIENT RECYCLING COMPARISON FOR EXTENDED AERATION SYSTEMS, OBJECTIVE C SEASONAL NUTRIENT REMOVAL

	% of TN Recycled (ADWF)	% of TP Recycled (ADWF)
Existing Plant	17.9%	23.3%
Objective C Seasonal	17.9%	46.8%

Sludge Production

From Table 4-31, if Objective C is achieved only during dry weather, then sludge production would increase 13.8 percent on an annual basis, adding 24 tons of dry solids per year, or 0.11 tons per million gallons of wastewater treated.

Energy Consumption

MA Plant

Upgrading the MA plant to achieve Objective C seasonally would increase the plant energy requirements by 1,000 kW-hours/year, or about 0.1 percent, as shown in Table 4-39. Approximately 50 percent of this increase would be attributable to the additional operation of the solids processes associated with achieving Objective C. The annual energy consumption for the upgraded plant would increase by about 4 kW-hours per million gallons of influent wastewater treated. On an annual basis, seasonal operation requires approximately 9 percent of the increased energy required to achieve Objective C year-round.

TABLE 4-39.
ADDITIONAL ENERGY CONSUMPTION FOR UPGRADING MA PLANT TO ACHIEVE OBJECTIVE C SEASONALLY

Yearly Energy Required	
Existing MA Plant	998,500 kW-hours/year
Objective C, Seasonal	999,500 kW-hours/year
Energy Increase for Upgrade	
Annual Quantity	1,000 kW-hours/year
Percent	0.1%
Increase per Volume of Plant Flow	4 kW-hours/MG

DA Plant

Upgrading the DA plant secondary treatment process to achieve Objective C seasonally would increase the plant energy requirements by 3,000 kW-hours/year, or about 0.3 percent, as shown in Table 4-40. There would be no increase in the energy requirements for solids processes. The annual energy consumption for the upgraded plant would increase by about 13 kW-hours per million gallons of influent wastewater treated. Approximately 17 percent of this increase would be attributable to the operation of the solids processes associated with achieving Objective C. On an annual basis, seasonal operation requires approximately 28 percent of the increased energy required to achieve Objective C year-round.

Chemical Usage

To achieve Objective C nutrient removal on a seasonal basis, upgraded MA plants would require approximately 100 gallons of alum and an additional 64 gallons of magnesium hydroxide per million gallons treated. Upgraded DA plants would require approximately 100 gallons of alum and reduce the usage magnesium hydroxide approximately 48 gallons of magnesium hydroxide per million gallons treated.

Footprint Requirements

Space requirements to accommodate new process equipment needed to achieve Objective C on a seasonal basis would be the same as described for achieving this objective on a year-round basis as indicated in Table 4-17.

TABLE 4-40.
ADDITIONAL ENERGY CONSUMPTION FOR UPGRADING DA PLANT TO ACHIEVE OBJECTIVE C SEASONALLY

Yearly Energy Required	
Existing DA Plant	850,500 kW-hours/year
Objective C, Seasonal	853,500 kW-hours/year
Energy Increase for Upgrade	
Annual Quantity	3,000 kW-hours/year
Percent	0.3%
Increase per Volume of Plant Flow	13 kW-hours/MG

4.3.4 Objective D

Process Description

The Objective D (TP <0.1 mg/L) treatment processes for seasonal nutrient removal would be the same as for year-round nutrient removal except that the capital facilities would be designed based on MMDWF instead of MMWWF and O&M costs would be based on ADWF instead of AWWF. No additional aeration tanks are required for nutrient removal. Refer to Section 4.2.4 for detailed process description and flow schematics. Process design data are included in Table 4-31.

Recycled Loads

Sludge wasted from the secondary clarifier will be thickened in a sludge thickener and digested in an aerobic digester. The percentage of TN and TP returning from these sludge treatment processes was calculated using Biowin model outputs. Table 4-41 summarizes the results.

TABLE 4-41.
NUTRIENT RECYCLING COMPARISON FOR EXTENDED AERATION SYSTEMS, OBJECTIVE D SEASONAL NUTRIENT REMOVAL

	% of TN Recycled (ADWF)	% of TP Recycled (ADWF)
Existing Plant	17.9%	23.3%
Objective D Seasonal	18.3%	36.8%

Sludge Production

If Objective D is achieved only during dry weather, then annual sludge production would increase 16 percent, adding 28.4 tons of dry solids per year, or 0.12 tons per million gallons of wastewater treated.

Energy Consumption

MA Plant

Upgrading the MA plant to achieve Objective D seasonally would increase the plant energy requirements by 16,500 kW-hours/year, or about 2 percent, as shown in Table 4-42. This is more than 16 times the energy increase required for Objective C seasonal nutrient removal. Approximately 90 percent of this increase would be attributable to the additional operation of the solids processes associated with achieving

Objective D. The annual energy consumption for the upgraded plant would increase by about 72 kW-hours per million gallons of influent wastewater treated. On an annual basis, seasonal operation requires approximately 45 percent of the increased energy required to achieve Objective D year-round.

TABLE 4-42.
ADDITIONAL ENERGY CONSUMPTION FOR UPGRADING MA PLANT TO ACHIEVE OBJECTIVE D SEASONALLY

Yearly Energy Required	
Existing MA Plant	998,500 kW-hours/year
Objective D, Seasonal	1,015,000 kW-hours/year
Energy Increase for Upgrade	
Annual Quantity	16,500 kW-hours/year
Percent	2%
Increase per Volume of Plant Flow	72 kW-hours/MG

DA Plant

Upgrading the DA plant secondary treatment process to achieve Objective D seasonally would increase the plant energy requirements by 19,500 kW-hours/year, or about 2 percent, as shown in Table 4-43. There would be no increase in the energy requirements for solids processes. The annual energy consumption for the upgraded plant would increase by about 85 kW-hours per million gallons of influent wastewater treated. Approximately 45 percent of this increase would be attributable to the operation of the solids processes associated with achieving Objective D. On an annual basis, seasonal operation requires approximately 46 percent of the increased energy required to achieve Objective D year-round.

TABLE 4-43.
ADDITIONAL ENERGY CONSUMPTION FOR UPGRADING DA PLANT TO ACHIEVE OBJECTIVE D SEASONALLY

Yearly Energy Required	
Existing DA Plant	850,500 kW-hours/year
Objective D, Seasonal	870,000 kW-hours/year
Energy Increase for Upgrade	
Annual Quantity	19,500 kW-hours/year
Percent	2%
Increase per Volume of Plant Flow	85 kW-hours/MG

Chemical Usage

To achieve Objective D on a seasonal basis, upgraded MA plants would require 132 gallons of alum and an additional 144 gallons of magnesium hydroxide per million gallons treated. Upgraded DA plants would require 132 gallons of alum and an additional 32 gallons of magnesium hydroxide per million gallons treated.

Footprint Requirements

Space requirements to accommodate new process equipment required to achieve Objective D on a seasonal basis would be the same as described for achieving this objective on a year-round basis as indicated in Table 4-22.

4.3.5 Objective E

Process Description

The Objective E (TIN <8 mg/L and TP <1 mg/L) treatment processes for seasonal nutrient removal would be the same as for year-round nutrient removal except that the capital facilities would be designed based on MMDWF instead of MMWWF and O&M costs would be based on ADWF instead of AWWF. No additional aeration tanks are required for nutrient removal. Refer to Section 4.2.5 for detailed process description and flow schematics. Process design data are included in Table 4-31.

Recycled Loads

Sludge wasted from the secondary clarifier will be thickened in a sludge thickener and digested in an aerobic digester. The percentage of TN and TP returning from these sludge treatment processes was calculated using Biowin model outputs. Table 4-44 summarizes the results.

TABLE 4-44.
NUTRIENT RECYCLING COMPARISON FOR EXTENDED AERATION SYSTEMS, OBJECTIVE E SEASONAL NUTRIENT REMOVAL

	% of TN Recycled (ADWF)	% of TP Recycled (ADWF)
Existing Plant	17.9%	23.3%
Objective E Seasonal	15.2%	50.4%

Sludge Production

If Objective E is achieved only during dry weather, then sludge production would increase 13 percent on an annual basis, adding 21.7 tons of dry solids per year, or 0.12 tons per million gallons treated.

Energy Consumption

MA Plant

Upgrading the MA plant secondary treatment process to achieve Objective E seasonally would reduce the plant energy requirements by 58,500 kW-hours/year, or about 6 percent, as shown in Table 4-45. Total annual energy requirement would be about 8 percent less than required to achieve Objective E year-round. The energy required for the solids processing would be slightly greater (< 1 percent) than for the existing plant. Total annual energy consumption for the upgraded plant would decrease by 256 kW-hours per million gallons of influent wastewater treated.

TABLE 4-45.
ADDITIONAL ENERGY CONSUMPTION FOR UPGRADING MA PLANT TO ACHIEVE OBJECTIVE E SEASONALLY

Yearly Energy Required	
Existing MA Plant	998,500 kW-hours/year
Objective E, Seasonal	940,000 kW-hours/year
Energy Increase for Upgrade	
Annual Quantity	(58,500) kW-hours/year
Percent	(6%)
Increase per Volume of Plant Flow	(256) kW-hours/MG

DA Plant

Upgrading the DA plant secondary treatment process to achieve Objective E seasonally would increase the plant energy requirements by 89,500 kW-hours/year, or about 11 percent, as shown in Table 4-46. Less than 1 percent of the increase energy demand would be attributable to the increased operation of the solids processes associated with achieving Objective E. The annual energy consumption for the upgraded plant would increase by about 392 kW-hours per million gallons of influent wastewater treated. Approximately 17 percent of this increase would be attributable to the operation of the solids processes associated with achieving Objective E. On an annual basis, seasonal operation requires approximately 52 percent of the increased energy required to achieve Objective E year-round.

TABLE 4-46.
ADDITIONAL ENERGY CONSUMPTION FOR UPGRADING DA PLANT TO ACHIEVE OBJECTIVE E SEASONALLY

Yearly Energy Required	
Existing DA Plant	850,500 kW-hours/year
Objective E, Seasonal	940,000 kW-hours/year
Energy Increase for Upgrade	
Annual Quantity	89,500 kW-hours/year
Percent	11%
Increase per Volume of Plant Flow	392 kW-hours/MG

Chemical Usage

To achieve Objective E on a seasonal basis, upgraded MA plants would require 100 gallons of alum and an additional 96 gallons of magnesium hydroxide per million gallons treated. Upgraded DA plants would require 100 gallons of alum per million gallons treated and 16 gallons less of magnesium hydroxide per million gallons treated than the existing plant.

Footprint Requirements

Space requirements to accommodate new process equipment required to achieve Objective E on a seasonal basis would be the same as described for achieving this objective on a year-round basis as indicated in Table 4-26.

4.3.6 Objective F

Process Description

The Objective F (TIN <3 mg/L and TP <0.1 mg/L) treatment processes for seasonal nutrient removal would be the same as for year-round nutrient removal except that the capital facilities would be designed based on MMDWF instead of MMWWF and O&M costs will be based on ADWF instead of AWWF. No additional aeration tanks are required for nutrient removal. Chemical storage tanks would be designed based on maximum usage of chemical during either MMDWF or ADWF. Refer to Section 4.2.6 for detailed process description and flow schematics. Process design data are included in Table 4-31.

Recycled Loads

Sludge wasted from the secondary clarifier will be thickened in a sludge thickener and digested in an aerobic digester. The percentage of TN and TP returning from these sludge treatment processes was calculated using Biowin model outputs. Table 4-47 summarizes the results.

TABLE 4-47.
NUTRIENT RECYCLING COMPARISON FOR EXTENDED AERATION SYSTEMS, OBJECTIVE F SEASONAL NUTRIENT REMOVAL

	% of TN Recycled (ADWF)	% of TP Recycled (ADWF)
Existing Plant	17.9%	23.3%
Objective F Seasonal	15.3%	36.6%

Sludge Production

Chemical phosphorus removal to achieve Objective F seasonally will increase the sludge produced by 18 percent annually, adding 32.3 tons of dry solids per year (0.14 tons per million gallons treated).

Energy Consumption

MA Plant

Upgrading the MA plant to achieve Objective F seasonally would increase the plant energy requirements by 46,500 kW-hours/year, or about 5 percent, as shown in Table 4-48. Less than 1 percent of this increase would be attributable to the additional operation of the solids processes associated with achieving Objective F. The annual energy consumption for the upgraded plant would increase by about 204 kW-hours per million gallons of influent wastewater treated. On an annual basis, seasonal operation requires approximately 15 percent of the increased energy required to achieve Objective F year-round.

DA Plant

Upgrading the DA plant to achieve Objective F seasonally would increase the plant energy requirements by 194,500 kW-hours/year, or about 23 percent, as shown in Table 4-49. Less than 1 percent of the increase energy demand would be attributable to the increased operation of the solids processes associated with achieving Objective F. The annual energy consumption for the upgraded plant would increase by about 853 kW-hours per million gallons of influent wastewater treated. Approximately 45 percent of this increase would be attributable to the operation of the solids processes associated with achieving Objective F. On an annual basis, seasonal operation requires approximately 42 percent of the increased energy required to achieve Objective F year-round.

TABLE 4-48.
ADDITIONAL ENERGY CONSUMPTION FOR UPGRADING MA PLANT TO ACHIEVE OBJECTIVE F SEASONALLY

Yearly Energy Required	
Existing MA Plant	998,500 kW-hours/year
Objective F, Seasonal	1,045,000 kW-hours/year
Energy Increase for Upgrade	
Annual Quantity	46,500 kW-hours/year
Percent	5%
Increase per Volume of Plant Flow	204 kW-hours/MG

TABLE 4-49.
ADDITIONAL ENERGY CONSUMPTION FOR UPGRADING DA PLANT TO ACHIEVE OBJECTIVE F SEASONALLY

Yearly Energy Required	
Existing DA Plant	850,500 kW-hours/year
Objective F, Seasonal	1,045,000 kW-hours/year
Energy Increase for Upgrade	
Annual Quantity	194,500 kW-hours/year
Percent	23%
Increase per Volume of Plant Flow	853 kW-hours/MG

Chemical Usage

To achieve Objective F on a seasonal basis, upgraded MA plants would require 128 gallons of alum, an additional 120 gallons of magnesium hydroxide, and 16 gallons of methanol per million gallons treated. Upgraded DA plants would require 128 gallons of alum, an additional 8 gallons of magnesium hydroxide, and 16 gallons of methanol per million gallons treated.

Footprint Requirements

Space requirements to accommodate new process equipment required to achieve Objective F on a seasonal basis would be the same as described for achieving this objective on a year-round basis as indicated in Table 4-30.

TABLE 4-2
EXTENDED AERATION PLANT BIOWIN RESULTS FOR YEAR-ROUND NUTRIENT REMOVAL

	PROCESS DESIGN - MMWW FLOWS								WET SEASON - AWW FLOWS								DRY SEASON - ADW FLOWS							
	Existing Plant		Upgraded Plant						Existing Plant		Upgraded Plant						Existing Plant		Upgraded Plant					
Description	Mechanical Aeration	Diffused Aeration	Obj. A	Obj. B	Obj. C	Obj. D	Obj. E	Obj. F	Mechanical Aeration	Diffused Aeration	Obj. A	Obj. B	Obj. C	Obj. D	Obj. E	Obj. F	Mechanical Aeration	Diffused Aeration	Obj. A	Obj. B	Obj. C	Obj. D	Obj. E	Obj. F
Nutrient Removal Goals																								
TIN (mg/L)			< 8	< 3			< 8	< 3			< 8	< 3			< 8	< 3			< 8	< 3			< 8	< 3
TP (mg/L)					< 1	< 0.1	< 1	< 0.1					< 1	< 0.1	< 1	< 0.1					< 1	< 0.1	< 1	< 0.1
Plant Size, Average Temperature																								
Influent Flow, mgd	1.0	1.0	1.0	1.0	1.0	1.0	1.0	1.0	0.75	0.75	0.75	0.75	0.75	0.75	0.75	0.75	0.50	0.50	0.50	0.5	0.50	0.50	0.50	0.50
Temp, °C	10	10	10	10	10	10	10	10	10	10	10	10	10	10	10	10	15	15	15	15	15	15	15	15
Influent Loads																								
BOD	165	165	165	165	165	165	165	165	221	221	221	221	221	221	221	221	331	331	331	331	331	331	331	331
TSS	188	188	188	188	188	188	188	188	251	251	251	251	251	251	251	251	376	376	376	376	376	376	376	376
VSS	132	132	132	132	132	132	132	132	176	176	176	176	176	176	176	176	263	263	263	263	263	263	263	263
TKN	24	24	24	24	24	24	24	24	32	32	32	32	32	32	32	32	48	48	48	48	48	48	48	48
TP	5.7	5.7	5.7	5.7	5.7	5.7	5.7	5.7	7.6	7.6	7.6	7.6	7.6	7.6	7.6	7.6	11.4	11.4	11.4	11.4	11.4	11.4	11.4	11.4
Alkalinity	2.01	2.01	2.01	2.01	2.01	2.01	2.01	2.01	2.68	2.68	2.68	2.68	2.68	2.68	2.68	2.68	4	4	4	4	4	4	4	4
pH	6.8	6.8	6.8	6.8	6.8	6.8	6.8	6.8	6.8	6.8	6.8	6.8	6.8	6.8	6.8	6.8	7	7	7	7	7	7	7	7
Oxidation Ditch / Aeration Tank																								
Tank Volume, MG	1.00	1.00	0.70	0.50	1.00	1.00	0.70	0.50	1.00	1.00	0.70	0.50	1.00	1.00	0.70	0.50	1.00	1.00	0.70	0.50	1.00	1.00	0.70	0.50
HRT, hrs	24	24	16.8	12	24	24	16.8	12	32	32	22.4	16	32	32	22.4	16	48	48	33.6	24	48	48	33.6	24
MLSS Conc., mg/L	2,809	2,807	2,812	2,944	3,378	3,459	3,255	3,298	2,909	2,909	2,958	3,054	3,576	3,697	3,437	3,642	2,943	2,943	3,062	3,134	3,634	3,597	3,588	3,558
DO Concentration, mg/L	2	2	2	2	2	2	2	2	2	2	2	2	2	2	2	2	2	2	2	2	2	2	2	2
Ditch Power Uptake, HP	80								81								96							
Aeration Tank Airflow rate, cfm		904	756	651	906	899	771	639		936	751	651	916	920	771	657		986	781	716	986	980	807	722
BioWin SRT, days	18.01	18.01	18.02	18.1	18	17.14	18	17.2	18.26	18.26	18.28	18.38	18.25	18.25	18.27	18.32	18.78	18.78	18.79	18.91	18.77	18.06	18.79	18.18
RAS Recyle Rate	0.5Q	0.5Q	0.5Q	0.5Q	0.5Q	0.5Q	0.5Q	0.5Q	0.5Q	0.5Q	0.5Q	0.5Q	0.5Q	0.5Q	0.5Q	0.5Q	0.5Q	0.5Q	0.5Q	0.5Q	0.5Q	0.5Q	0.5Q	0.5Q
Pre - Anoxic Tank																								
Tank Volume, MG			0.30	0.20			0.30	0.20			0.30	0.20			0.30	0.20			0.30	0.20			0.30	0.20
HRT, hrs			7.2	4.8			7.2	4.8			9.6	6.4			9.6	6.4			14.4	9.6			14.4	9.6
Internal Recycle Rate			6Q	6Q			6Q	6Q			6Q	6Q			6Q	6Q			`	6Q			6Q	6Q
Post - Anoxic Tank																								
Tank Volume, MG				0.20				0.20				0.20				0.20				0.20				0.20
HRT, hrs				4.8				4.8				6.4				6.4				9.6				9.6
Aerobic Tank																								
Tank Volume, MG				0.10				0.10				0.10				0.10				0.10				0.10
HRT, hrs				2.4				2.4				3.2				3.2				4.8				4.8
Air Supply Rate, cfm				128				156				125				146				115				130
Clarifier																								
Area, SF	3,500	3,500	3,500	3,500	3,500	3,500	3,500	3,500	3,500	3,500	3,500	3,500	3,500	3,500	3,500	3,500	3,500	3,500	3,500	3,500	3,500	3,500	3,500	3,500
Surface Overflow Rate, gal/ft^2	286	286	286	286	286	286	286	286	214	214	214	214	214	214	214	142	142	142	142	142	142	142	142	142
Tertiary Filters																								
Filter Area (ft2) (from Capdet)						551		551						551		551						551		551
Chemical Addition																								
Methanol, gpd				20				20				15				20				20				20
Alum Dosage, gpd					110	160	80	125					110	160	110	160					125	165	125	160
Magnesium Hydroxide Dosage, gpd	25	120	40	40	150	200	80	120		100	20	20	150	200	80	120	40	80	NR	NR	120	160	60	90
Magnesium Hydroxide Conc., meq/L	14,500	14,500	14,500	14,500	14,500	14,500	14,500	14,500		14,500	14,500	14,500	14,500	14,500	14,500	14,500	14,500	14,500			14,500	14,500	14,500	14,500

TABLE 4-2
EXTENDED AERATION PLANT BIOWIN RESULTS FOR YEAR-ROUND NUTRIENT REMOVAL

	PROCESS DESIGN - MMWW FLOWS								WET SEASON - AWW FLOWS								DRY SEASON - ADW FLOWS							
	Existing Plant		Upgraded Plant						Existing Plant		Upgraded Plant						Existing Plant		Upgraded Plant					
Description	Mechanical Aeration	Diffused Aeration	Obj. A	Obj. B	Obj. C	Obj. D	Obj. E	Obj. F	Mechanical Aeration	Diffused Aeration	Obj. A	Obj. B	Obj. C	Obj. D	Obj. E	Obj. F	Mechanical Aeration	Diffused Aeration	Obj. A	Obj. B	Obj. C	Obj. D	Obj. E	Obj. F
Aerobic Digester																								
Solids % from Clarifier	0.8%	0.8%	0.8%	0.9%	1.0%	1.0%	1.0%	1.0%	0.9%	0.9%	0.9%	0.9%	1.0%	1.1%	1.0%	1.1%	0.9%	0.9%	0.9%	0.9%	1.1%	1.1%	1.0%	1.1%
Solids % from Thickener	5.0%	5.0%	5.0%	5.2%	6.0%	6.0%	5.8%	5.9%	5.2%	5.2%	5.3%	5.4%	6.3%	6.6%	6.1%	6.3%	5.3%	5.2%	5.5%	5.5%	6.5%	6.4%	6.4%	6.3%
Combined Solids % to Aerobic Digester	3.5%	3.5%	3.5%	3.6%	4.2%	4.3%	4.1%	4.1%	3.6%	3.6%	3.7%	3.8%	4.4%	4.6%	4.3%	4.4%	3.7%	3.7%	3.8%	3.9%	4.5%	4.4%	4.5%	4.4%
VSS loading to Digester, ppd	730	730	710	745	732	753	712	741	739	739	722	747	740	747	710	727	719	718	706	725	719	728	693	697
TSS loading to Digester, ppd	1,301	1,301	1,303	1,354	1,565	1,684	1,508	1,605	1,329	1,328	1,351	1,381	1,371	1,690	1,570	1,656	1,308	1,307	1,360	1,377	1,615	1,661	1,594	1,630
Volume, MG	0.25	0.25	0.25	0.25	0.25	0.25	0.25	0.25	0.25	0.25	0.25	0.25	0.25	0.25	0.25	0.25	0.25	0.25	0.25	0.25	0.25	0.25	0.25	0.25
Hydraulic Residence Time, hrs	1352	1352	1352	1352	1352	1288	1352	1352	1372	1372	1372	1372	1371	1371	1372	1357	1418	1411	1411	1411	1410	1357	1411	1357
Digester Sludge Age, days	56.33	56.33	56.33	56.33	56.33	53.67	56.33	56.33	57.17	57.17	57	57	57	57	57	57	59	59	59	59	59	57	59	57
Total Sludge Age, days	74.34	74.34	74.35	74.43	74.33	70.81	74.33	73.53	75.43	75.43	75	76	75	75	75	75	78	78	78	78	78	75	78	75
Digester Airflow rate cfm	139	139	140	150	139	139	139	154	139	139	139	150	164	139	139	125	119	119	120	127	119	123	120	125
VSS destruction %	27.21%	27.21%	28.25%	28.97%	27.14%	27.40%	28.20%	29.19%	26.83%	26.83%	27.8%	28.6%	26.8%	26.6%	27.9%	28.2%	24.4%	24.3%	25.4%	26.0%	24.3%	24.7%	25.4%	26.0%
SOUR, mg/L of O_2/hr/g TSS (< = 1.5)	0.256	0.256	0.262	0.271	0.206	0.208	0.218	0.229	0.246	0.246	0.251	0.260	0.198	0.186	0.200	0.196	0.180	0.210	0.211	0.220	0.165	0.170	0.167	0.175
Magnesium Hydroxide addition, gal/day	20.0	20.0	20.0	20.0	20.0	20.0	20.0	20.0	20.0	20.0	20	20	20	20	20	20	20	20	20	20	20	20	20	20
Sludge Production																								
Dry Sludge Production, ppd	923	923	906	928	1148	1241	1088	1179	947	947	934	948	1190	1253	1166	1225	950	950	943	953	1212	1258	1188	1231
Effluent																								
BOD, mg/L	1.85	1.85	1.8	1.7	1.73	1.37	1.71	1.86	1.63	1.63	1.57	1.35	1.54	1.2	1.68	1.65	1.37	1.37	1.3	1.07	1.32	1.26	1.3	1.32
TSS, mg/L	4.5	4.5	4.5	4.6	4.6	3.4	4.6	3.0	3.3	3.3	3.3	3.3	3.4	3.9	3.4	3.9	2.2	2.2	2.2	2.2	2.2	5.5	2.2	5.5
Phosphorous, mg/L	4.27	4.27	4.11	3.88	0.8	0.05	0.82	0.05	5.68	5.66	5.2	4.95	0.93	0.05	0.13	0.04	8.51	8.49	7.31	7.26	0.3	0.03	0.32	0.03
Ammonia N, mg/L	0.63	0.61	1.03	1.07	0.62	0.72	1	1.34	0.6	0.6	1	0.95	0.59	0.58	1.25	1.12	0.39	0.38	0.57	0.39	0.39	0.44	0.56	0.47
TIN, mg/L	15.97	16.05	2.92	2.45	16.16	16.16	2.91	2.60	21.82	21.89	3.6	2.85	21.82	21.82	3.79	2.85	33.38	33.55	4.72	2.86	33.55	33.48	4.7	2.85
pH	6.53	6.58	6.54	6.56	6.55	6.53	6.58	6.56	6.84	6.61	6.56	6.64	6.65	6.6	6.6	6.57	6.66	6.67	6.62	6.66	6.64	6.5	6.7	6.53
Recycle Loads																								
TN recycled from thickener, ppd	12.37	12.37	10.18	10.64	12.42	12.42	10.2	12.84	13.29	13.29	10.44	10.72	13.31	13.41	13.31	10.4	14.51	14.51	10.36	10.42	14.52	14.83	10.16	9.99
TN recycled from Digester, ppd	22.52	22.52	21.92	23.36	23.42	23.42	22.79	24.18	22.8	22.8	22.14	23.71	22.83	22.95	22.83	22.58	21.35	21.35	20.62	21.48	21.37	21.84	20.21	20.74
Total Nitrogen Recycled, ppd	34.89	34.89	32.1	34	35.84	35.84	32.99	37.02	36.09	36.09	32.58	34.43	36.14	36.36	36.14	32.98	35.86	35.86	30.98	31.9	35.89	36.67	30.37	30.73
Phosphorus Recycle from Thickener, ppd	3.7	3.7	4.75	5.43	8.69	9.79	9.11	8.9	3.92	3.92	5.9	6.55	8.86	9.81	8.8	8.98	4.19	4.19	7.43	7.29	9.55	9.02	9.78	9.01
Phosphorus Recycle from Digester, ppd	7.37	7.37	12.75	15.83	12.3	13	15.16	8.33	7.44	7.44	17.27	19.94	12.51	13.5	8.26	8.36	6.91	6.91	23.08	22.08	12.7	8.5	14.21	8.38
Total Phosphorus Recycled, ppd	11.07	11.07	17.5	21.26	20.99	22.79	24.27	17.23	11.36	11.36	23.17	26.49	21.37	23.31	17.06	17.34	11.1	11.1	30.51	29.37	22.25	17.52	23.99	17.39
% TN recycled	17.4%	17.4%	16.0%	17.0%	17.9%	17.9%	16.5%	18.5%	18.0%	18.0%	16.3%	17.2%	18.0%	18.2%	18.0%	16.5%	17.9%	17.9%	15.5%	15.9%	17.9%	18.3%	15.2%	15.3%
% TP Recycled	23.3%	23.3%	36.8%	44.7%	44.1%	47.9%	51.0%	36.2%	23.9%	23.9%	48.7%	55.7%	44.9%	49.0%	35.9%	36.5%	23.3%	23.3%	64.1%	61.7%	46.8%	36.8%	50.4%	36.6%

TABLE 4-31
EXTENDED AERATION PLANT BIOWIN RESULTS FOR SEASONAL NUTRIENT REMOVAL

	PROCESS DESIGN - MMDW FLOWS								DRY SEASON - ADW FLOWS							
	Existing Plant		Upgraded Plant						Existing Plant		Upgraded Plant					
Description	Mechanical Aeration	Diffused Aeration	Obj. A	Obj. B	Obj. C	Obj. D	Obj. E	Obj. F	Mechanical Aeration	Diffused Aeration	Obj. A	Obj. B	Obj. C	Obj. D	Obj. E	Obj. F
Nutrient Removal Goals																
TIN (mg/L)			< 8	< 3			< 8	< 3			< 8	< 3			< 8	< 3
TP (mg/L)					< 1	< 0.1	< 1	< 0.1					< 1	< 0.1	< 1	< 0.1
Plant Size, Average Temperature																
Influent Flow, mgd	0.7	0.7	0.7	0.7	0.7	0.7	0.7	0.7	0.50	0.50	0.50	0.5	0.50	0.50	0.50	0.50
Temp, °C	15	15	15	15	15	15	15	15	15	15	15	15	15	15	15	15
Influent Loads																
BOD	241	241	241	241	241	241	241	241	331	331	331	331	331	331	331	331
TSS	273	273	273	273	273	273	273	273	376	376	376	376	376	376	376	376
VSS	191	191	191	191	191	191	191	191	263	263	263	263	263	263	263	263
TKN	35	35	35	35	35	35	35	35	48	48	48	48	48	48	48	48
TP	8.3	8.3	8.3	8.3	8.3	8.3	8.3	8.3	11.4	11.4	11.4	11.4	11.4	11.4	11.4	11.4
Alkalinity	2.92	2.92	2.92	2.92	2.92	2.92	2.92	2.92	4	4	4	4	4	4	4	4
pH	7	7	7	7	7	7	7	7	7	7	7	7	7	7	7	7
Oxidation Ditch / Aeration Tank																
Tank Volume, MG	1.00	1.00	0.70	0.50	1.00	1.00	0.70	0.50	1.00	1.00	0.70	0.50	1.00	1.00	0.70	0.50
HRT, hrs	34.8	34.8	24.3	17.4	34.8	34.8	24.3	17.4	48	48	33.6	24	48	48	33.6	24
MLSS Conc., mg/L	2,873	2,873	2,941	3,042	3,413	3,511	3,380	3,323	2,943	2,943	3,062	3,134	3,634	3,597	3,588	3,543
DO Concentration, mg/L	2	2	2	2	2	2	2	2	2	2	2	2	2	2	2	2
Ditch Power Uptake, HP	94								96							
Aeration Tank Airflow rate ft3/min		983	800	718	983	975	801	718		986	781	716	986	980	807	722
BioWin SRT, days	18.36	18.36	18.37	18.47	18.36	17.48	18.37	18.47	18.78	18.78	18.79	18.91	18.77	18.06	18.79	18.18
RAS Recyle Rate	0.5Q	0.5Q	0.5Q	0.5Q	0.5Q	0.5Q	0.5Q	0.5Q	0.5Q	0.5Q	0.5Q	0.5Q	0.5Q	0.5Q	0.5Q	0.5Q
Pre - Anoxic Tank																
Tank Volume, MG			0.30	0.20			0.30	0.20			0.30	0.20			0.30	0.20
HRT, hrs			10.4	7.0			10.4	7.0			14.4	9.6			14.4	9.6
Internal Recycle Rate			6Q	6Q			6Q	6Q			6Q	6Q			6Q	6Q
Post - Anoxic Tank																
Tank Volume, MG				0.20				0.20				0.20				0.20
HRT, hrs				7.0				7.0				9.6				9.6
Aerobic Tank																
Tank Volume, MG				0.10				0.10				0.10				0.10
HRT, hrs				3.5				3.5				4.8				4.8
Air Supply Rate, ft^3/min				131				143				115				130
Clarifier																
Area, SF	3,500	3,500	3,500	3,500	3,500	3,500	3,500	3,500	3,500	3,500	3,500	3,500	3,500	3,500	3,500	3,500
Surface Overflow Rate, gal/ft^2	197	197	197	197	197	197	197	197	142	142	142	142	142	142	142	142
Tertiary Filters																
Filter Area (ft2) (from Capdet)						380		380						380		380

TABLE 4-31
EXTENDED AERATION PLANT BIOWIN RESULTS FOR SEASONAL NUTRIENT REMOVAL

	PROCESS DESIGN - MMDW FLOWS								DRY SEASON - ADW FLOWS							
	Existing Plant		Upgraded Plant						Existing Plant		Upgraded Plant					
Description	Mechanical Aeration	Diffused Aeration	Obj. A	Obj. B	Obj. C	Obj. D	Obj. E	Obj. F	Mechanical Aeration	Diffused Aeration	Obj. A	Obj. B	Obj. C	Obj. D	Obj. E	Obj. F
Chemical Addition																
Methanol, gal/d				20				20				20				20
Alum Dosage, gal/day					90	165	80	125					125	165	125	160
Magnesium Hydroxide Dosage, gal/day	40	80	NR	NR	120	180	60	90	40	80	NR	NR	120	160	60	90
Magnesium Hydroxide Conc., meq/L	14,500	14,500			14,500	14,500	14,500	14,500	14,500	14,500			14,500	14,500	14,500	14,500
Aerobic Digester																
Solids % from Clarifier	0.86%	0.86%	0.9%	0.9%	1.00%	1.00%	1.0%	1.0%	0.9%	0.9%	0.9%	0.9%	1.1%	1.1%	1.0%	1.1%
Solids % from Thickener	5.10%	5.10%	5.2%	5.4%	6.10%	6.30%	6.0%	5.9%	5.3%	5.2%	5.5%	5.5%	6.5%	6.4%	6.4%	6.3%
Combined Solids % to Aerobic Digester	3.60%	3.60%	3.7%	3.8%	4.30%	4.40%	4.2%	4.1%	3.7%	3.7%	3.8%	3.9%	4.5%	4.4%	4.5%	4.4%
VSS loading to Digester, lbs/day	720	720	707	730	721	734	706	713	719	718	706	725	719	728	706	697
TSS loading to Digester, lbs/day	1,305	1,305	1,337	1,369	1,552	1,676	1,537	1,586	1,308	1,307	1,360	1,377	1,615	1,661	1,594	1,624
Volume, MG	0.25	0.25	0.25	0.25	0.25	0.25	0.25	0.25	0.25	0.25	0.25	0.25	0.25	0.25	0.25	0.25
Hydraulic Residence Time, hrs	1379	1379	1379	1379	1379	1313	1379	1379	1418	1411	1411	1411	1410	1357	1411	1357
Digester Sludge Age, days	57	57	57	57	57	55	57	57	59	59	59	59	59	57	59	57
Total Sludge Age, days	76	76	76	76	76	72	76	76	78	78	78	78	78	75	78	75
Digester Airflow rate ft3/min	122	122	123	131	122	122	123	131	119	119	120	127	119	123	120	125
VSS destruction %	24.7%	24.7%	25.8%	26.5%	24.7%	25.1%	25.8%	26.5%	24.4%	24.3%	25.4%	26.0%	24.3%	24.7%	25.4%	26.0%
SOUR, mg/L of O_2/hr/g TSS (< = 1.5)	0.220	0.219	0.224	0.233	0.180	0.178	0.188	0.197	0.180	0.210	0.211	0.220	0.165	0.170	0.172	0.176
Magnesium hydroxide, gal/day	20	20	20	20	20	20	20	20	20	20	20	20	20	20	20	20
Sludge Production																
Dry Sludge Production, ppd	946	946	935	949	1155	1267	1118	1186	950	950	943	953	1212	1258	1158	1225
Effluent																
BOD, mg/L	1.51	1.51	1.46	1.26	1.45	1.29	1.4	1.5	1.37	1.37	1.3	1.07	1.32	1.26	1.3	1.32
TSS, mg/L	3.0	3.0	3.0	3.0	3.1	4.3	3.1	3.6	2.2	2.2	2.2	2.2	2.2	5.5	2.2	5.2
Phosphorous, mg/L	6.2	6.2	5.61	5.41	0.54	0.03	0.84	0.04	8.51	8.49	7.31	7.26	0.29	0.03	0.32	0.03
Ammonia N, mg/L	0.38	0.4	0.6	0.47	0.39	0.45	0.57	0.51	0.39	0.38	0.57	0.39	0.38	0.44	0.56	0.47
TIN, mg/L	24.14	24.13	3.57	2.39	24.13	24.09	3.54	2.24	33.38	33.55	4.72	2.86	33.55	33.48	4.7	2.85
pH	6.82	6.55	6.5	6.53	6.61	6.51	6.67	6.56	6.66	6.67	6.62	6.66	6.64	6.5	6.7	6.56
Recycle Loads																
TN recycled from thickener	13.3	13.3	10.16	10.48	13.32	13.68	10.17	10.13	14.51	14.51	10.36	10.42	14.52	14.83	10.16	9.99
TN recycled from Digester	22.55	22.55	21.96	22.95	22.57	23.2	21.96	22.76	21.35	21.35	20.62	21.48	21.37	21.84	20.21	20.74
TN recycled from solids processing	35.85	35.85	32.12	33.43	35.89	36.88	32.13	32.89	35.86	35.86	30.98	31.9	35.89	36.67	30.37	30.73
Phosphorus Recycle from Thickener, ppd	3.9	3.9	6.21	6.58	9.28	8.41	10.08	9.03	4.19	4.19	7.43	7.29	9.55	9.02	9.78	9.01
Phosphorus Recycle from Digester, ppd	6.92	6.92	18.4	19.74	12.43	8	18.94	8.41	6.91	6.91	23.08	22.08	12.7	8.5	14.21	8.38
Total Phosphorus Recycled, ppd	10.82	10.82	24.61	26.32	21.71	16.41	29.02	17.44	11.1	11.1	30.51	29.37	22.25	17.52	23.99	17.39
% TN recycled	17.9%	17.9%	16.0%	16.7%	17.9%	18.4%	16.0%	16.4%	17.9%	17.9%	15.5%	15.9%	17.9%	18.3%	15.2%	15.3%
% TP Recycled	22.7%	22.7%	51.7%	55.3%	45.6%	34.5%	61.0%	36.7%	23.3%	23.3%	64.1%	61.7%	46.8%	36.8%	50.4%	36.6%

CHAPTER 5.
TECHNOLOGICAL EVALUATION
FOR CONVENTIONAL ACTIVATED SLUDGE PLANTS

5.1 BASE CASE/EXISTING SYSTEM

A base case model was developed in Biowin to represent a conventional activated sludge (CAS) plant with a MMWWF capacity of 1.0 mgd. Figure 5-1 shows the process flow schematic for the modeled CAS treatment plant. The plant consists of a primary clarifier, an aeration tank and a secondary clarifier to treat the liquid stream. Sludge wasted from the secondary clarifier is sent to a thickening unit and then combined with the primary sludge before being digested in an anaerobic digester.

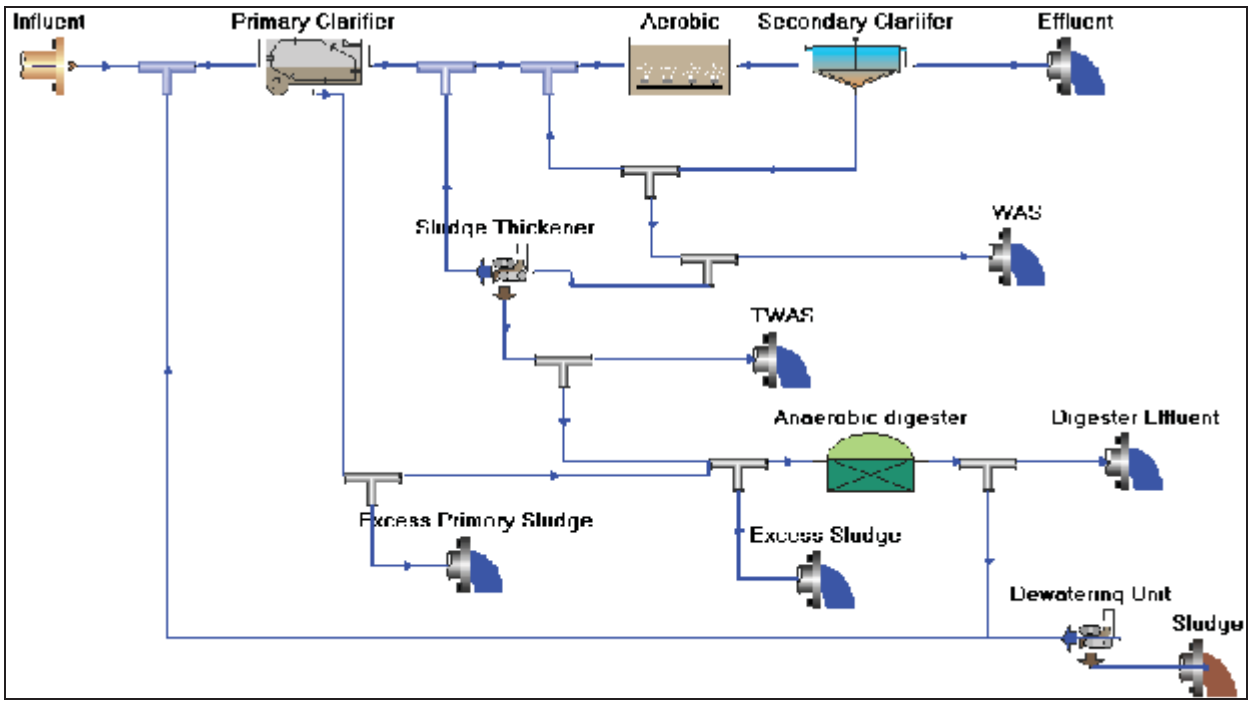

Figure 5-1. Process Flow Schematic of Conventional Activated Sludge Treatment Plant

The Biowin CAS model was developed based on the 1998 Washington State Orange Book and the general sizing and operational criteria listed in Table 5-1. Although the existing treatment process system is very effective in removing BOD and TSS (~95-percent removal), it removes only about 34 percent of influent nitrogen and 25 percent of influent phosphorus.

5.2 YEAR-ROUND NUTRIENT REMOVAL

Improvements required to provide year-round nutrient removal to achieve each treatment objective are described below. Process design data for all objectives are included in Table 5-2, which is attached at the end of this chapter.

TABLE 5-1
BASE CASE/EXISTING SYSTEM FOR CONVENTIONAL ACTIVATED SLUDGE PLANT

MMWWF	1.0 mgd
Temperature	10 ºC
Primary Clarifier	
Area	1,020 ft^2
Surface Overflow Rate	979 gal/ft^2
Aerobic Tank	
Tank Volume	0.2 MG
HRT	4.8 hours
Mixed Liquor Suspended Solids Concentration	2,046 mg/L
DO Concentration	1 mg/L
Air Supply Rate	336 cfm
Biowin SRT	5.25 days
RAS Recycle Rate	0.5 mgd
Secondary Clarifier	
Area	1,450 ft^2
Surface Overflow Rate	689 gal/ft^2
Anaerobic Digester	
TSS wasted from Aerobic Tank	650 ppd
Total loading to Digester	1,779 ppd
Total Volatile Solids loading to Digester	1,255 ppd
Volume	0.15 MG
Hydraulic Residence Time	19.8 days
Sludge Production	
Sludge Production	936 ppd
Effluent	
BOD	6.79 mg/L
TSS	12.8 mg/L
Phosphorous	4.27 mg/L
Ammonia N	15 mg/L
TIN	15.59 mg/L
pH	6.58

5.2.1 Objective A

Process Description

The upgrade evaluated for achieving Objective A (TIN <8 mg/L) for a conventional activated sludge plant consisted of converting the existing CAS process to a Modified Ludzack-Ettinger (MLE) process, demolishing the existing clarifiers and replacing them with a membrane bioreactor (MBR). Figure 5-2 shows the upgraded process flow schematic. Table 5-2 summarizes the process design data. Detailed Biowin model reports for the existing and upgraded plant are presented in Appendix A.

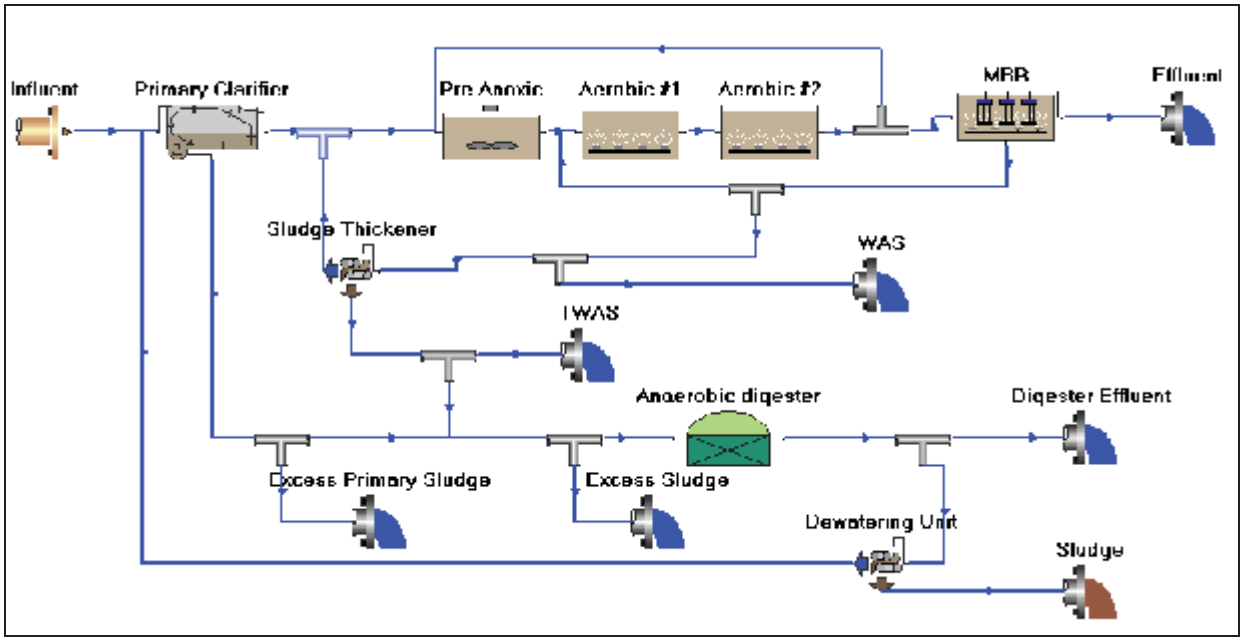

Figure 5-2. Process Schematic of CAS Plant Upgraded for Objective A Year-Round

Section 4.2.1 provides a detailed description of the MLE process. Since the volume of the aeration tank in the modeled existing secondary treatment process is only 0.2 MG, additional tanks would be needed for an MLE process that could meet the nutrient removal objective. A new 0.1-MG anoxic tank would need to be constructed upstream of the existing aeration system. Aeration capacity would be upgraded to meet the increased oxygen demand associated with the nitrification process and the longer sludge age. The DO in the tank would be maintained at 2.0 mg/L.

MBRs combine activated sludge treatment with a membrane liquid-solid separation process. The membrane component uses low-pressure microfiltration or ultra-filtration membranes, eliminating the need for clarification. The membranes are typically immersed in the aeration tank, although some applications use a separate membrane tank. An MBR process effectively overcomes the limitations associated with poor settling of sludge due to upsets in the CAS processes. MBRs can be operated at higher mixed liquor suspended solids (MLSS) concentrations, ranging from 8,000 to 10,000 mg/L (compared to 1,500 to 3,000 mg/L for the conventional CAS process with gravity clarifiers). The elevated biomass concentration in the MBR process allows for effective removal of both soluble and particulate biodegradable materials at higher loading rates. The small footprint of MBR systems and the high quality effluent produced make them particularly useful for nutrient removal projects at treatment plants where there is little or no available area for process alternatives with a significantly greater footprint.

The MBR tank was sized at 20,000 gallons with a membrane flux rate of 15.31 gpd/ft^2 at an MMWWF of 1.0 mgd. The DO in the MBR tank would be maintained at 6.0 mg/L, with an MLSS concentration of 8,300 mg/L. Mixed liquor from the MBR tank would be recycled to the aeration tank at a flow rate of 1.5 mgd, and mixed liquor from the terminal end of the aeration tank would be recycled to the anoxic tank at a rate of 5 mgd. The MLE-MBR system would have an SRT of 23 days.

Recycled Loads

Solids treatment for a CAS consists of a thickener for waste activated sludge (WAS) from the secondary clarifier and an anaerobic digester for the combined primary and secondary sludge. The percentage of TN and TP returning from these sludge treatment processes was calculated using Biowin model outputs. The

modeling results indicate upgrading to achieve Objective A would reduce the annual quantity of TN contained in the recycle streams approximately 33 percent and the annual quantity of TP recycled by 28 percent. Table 5-3 summarizes the results.

TABLE 5-3.
NUTRIENT RECYCLING COMPARISON FOR CONVENTIONAL ACTIVATED SLUDGE SYSTEMS, OBJECTIVE A YEAR-ROUND NUTRIENT REMOVAL

	% of TN Recycled		% of TP Recycled	
	AWWF	ADWF	AWWF	ADWF
Existing Plant	22.6%	22.0%	38.2%	40.7%
Objective A Year-Round	15.2%	14.6%	27.6%	28.4%

Sludge Production

From Table 5-2, average annual sludge produced by the existing CAS plant (the average of the AWWF and ADWF sludge production) is 168 tons/year, or 0.74 dry tons of solids per million gallons of wastewater treated. With upgrade of the plant to achieve Objective A, the plant's overall sludge production would increase to 174 tons/year, or 0.76 dry tons of solids per million gallons of wastewater treated. This 3-percent increase would be attributable to the improved capture of solids associated with the membrane filtration process. Objective A upgrades would result in a 12.5-percent decrease in the total volatile solids loading to the anaerobic digester and in methane production.

Energy Consumption

The process air requirements on an average annual basis would be approximately 150 percent greater for the upgraded plant to achieve Objective A than for the existing CAS system. The additional process air is required to satisfy the oxygen demand associated with nitrification and the longer sludge age, and to provide air scour of the membranes, which accounts for approximately 75 percent of the increased process air demand.

Upgrading the CAS plant to achieve Objective A year-round would increase the plant energy requirements by 476,300 kW-hours/year, or about 230 percent, as shown in Table 5-4. Less than 1 percent of this increase would be attributable to the operation of solids processes associated with achieving Objective A. The energy consumption for the upgraded plant would increase by about 2,088 kW-hours per million gallons of influent wastewater treated.

TABLE 5-4.
ADDITIONAL ENERGY CONSUMPTION FOR UPGRADING CAS PLANT TO ACHIEVE OBJECTIVE A YEAR-ROUND

Yearly Energy Required	
Existing CAS Plant	207,200 kW-hours/year
Objective A Year-Round	683,500 kW-hours/year
Energy Increase for Upgrade	
Annual Quantity	476,300 kW-hours/year
Percent	230%
Increase per Volume of Plant Flow	2,088 kW-hours/MG

Chemical Usage

No additional use of chemicals would be required to reduce nutrients as required for this objective, but 8,600 gallons each of 50-percent citric acid and 12.5-percent sodium hypochlorite would be required per year for membrane cleaning, which would need to be done periodically throughout the year. This equates to 38 gallons each of citric acid and sodium hypochlorite per million gallons of wastewater treated.

Footprint Requirements

To achieve Objective A for the 1-mgd CAS plant, the existing secondary clarifiers would be demolished to provide area for new process elements. The total area required for the new process elements would be approximately 2,000 square feet allocated as follows:

- 960 square feet for new anoxic tanks, including fine screening of primary clarifier effluent
- 270 square feet for new membrane tanks
- 730 square feet for a membrane blower building.

The area liberated by demolition of the existing secondary clarifiers would be approximately the same as that required for the upgrade, so no additional area would be required.

Table 5-5 compares the additional site area requirements, or footprint area, for upgrading existing CAS plants to achieve Objective A for the three generic plant capacities. Objective A upgrades at larger plants would liberate more site area than required, if all secondary clarifiers were demolished. Additional area is not required for the larger plants because the footprint requirement for the blower building does not increase at the same rate as the anoxic tanks and MBR tank size. For some plants, it may be beneficial to retain some of the existing secondary clarifiers to handle unusually high peak flow events. Refer to Appendix C for detailed footprint areas of the existing system and the proposed system.

TABLE 5-5.
ADDITIONAL FOOTPRINT REQUIRED FOR UPGRADING CONVENTIONAL ACTIVATED SLUDGE PLANTS TO ACHIEVE OBJECTIVE A YEAR-ROUND

Plant Design Capacity (mgd)	Additional Area Required for Upgrade (square feet)
1	0
10	(6,000)
150	(142,000)

Note: Values in parentheses indicate area currently occupied by existing treatment facilities that could become available for future use.

5.2.2 Objective B

Process Description

The upgrade evaluated for achieving Objective B (TIN <3 mg/L) is to convert the existing CAS system into a four-stage Bardenpho process (4BDP) with the addition of methanol and to replace the existing clarifiers with an MBR. Figure 5-3 shows the upgraded process flow schematic. Table 5-2 summarizes the process design data. Detailed Biowin model reports are in Appendix A.

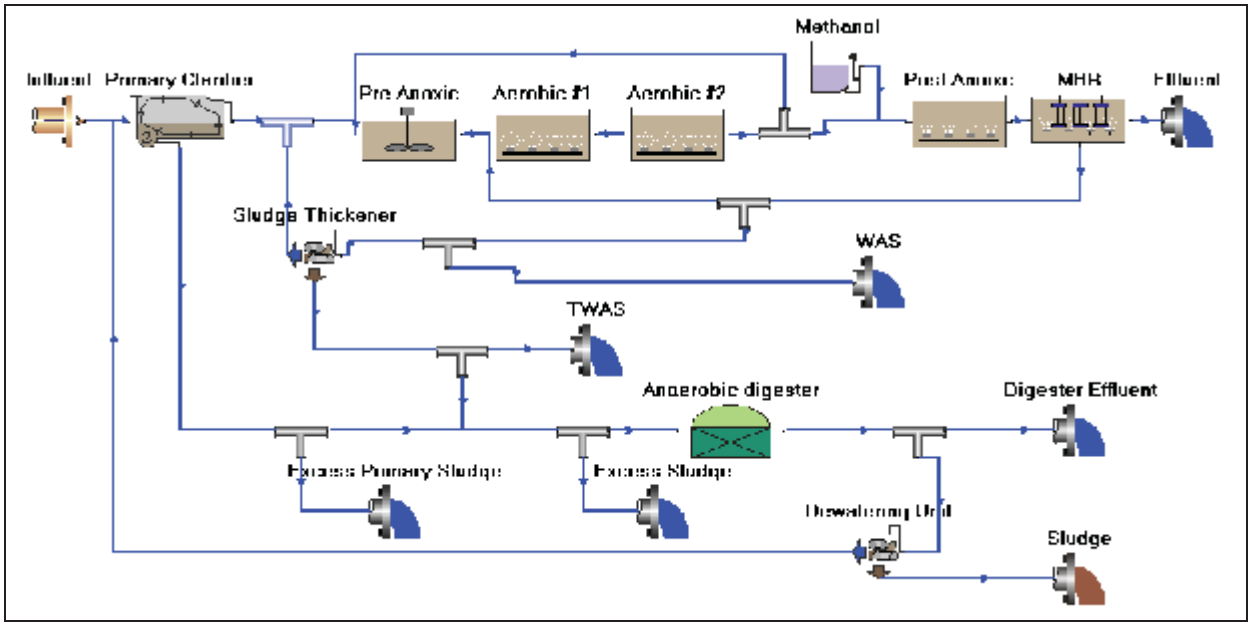

Figure 5-3. Process Schematic of CAS Plant Upgraded for Objective B Year-Round

The existing CAS process does not have adequate tank volume to maintain an adequate sludge age to achieve nitrification and denitrification. Therefore, additional tankage would need to be constructed. For the modeled 1-mgd plant, a new pre-anoxic tank of 0.1 MG and a new post-anoxic tank of 0.05 MG would be required. The MBR tank, which would be aerated, would act as a post-aeration basin to strip the nitrogen gas formed during the denitrification process. Methanol would be added to the post-anoxic tank as a supplemental carbon source to drive the denitrification process. Methanol dosages were determined as described in Chapter 4 for the 4BDP upgraded extended aeration plants. The existing secondary clarifier would be demolished and replaced with the MBR, as described for upgrading CAS plants to achieve Objective A year-round.

Recycled Loads

Solids treatment for a CAS consists of a thickener for WAS, an anaerobic digester for the combined primary and thickened sludge, and a digested-sludge dewatering system. The percentage of TN and TP returning in the recycle streams from solids handling and treatment processes was calculated using the Biowin model outputs. The results indicate that upgrades to achieve Objective B would reduce the quantity of total nitrogen in the recycle streams approximately 34 percent and the quantity of phosphorus in the recycle streams approximately 15 percent. Table 5-6 summarizes the results.

TABLE 5-6.
NUTRIENT RECYCLING COMPARISON FOR CONVENTIONAL ACTIVATED SLUDGE SYSTEMS, OBJECTIVE B YEAR-ROUND NUTRIENT REMOVAL

	% of TN Recycled		% of TP Recycled	
	AWWF	ADWF	AWWF	ADWF
Existing Plant	22.6%	22.0%	38.2%	40.7%
Objective B Year-Round	14.9%	14.8%	32.7%	33.8%

Sludge Production

From Table 5-2, average sludge produced by the upgraded plant to achieve Objective B is 970 ppd. This is about 5 percent greater than for the existing plant and 1.4 percent greater than for Objective A. The average annual sludge produced by the plant would increase approximately 5 percent, to about 177 tons/year or 0.78 dry tons of solids per million gallons of wastewater treated. This increase would be attributable to the improved capture of solids associated with membrane filtration and the addition of methanol to the post-anoxic tank for denitrification, which accounts for 0.01 tons of the additional sludge per million gallons of wastewater. Objective B upgrades would result in an 18.5-percent decrease in the total volatile solids loading to the anaerobic digester, reducing methane by the same percentage.

Energy Consumption

Upgrades to achieve Objective B year-round would increase average annual process air requirements by 147 percent. The process air required by the MBR system accounts for 76 percent of this increase. Additional energy would be required for intra-process pumping and mixing.

Upgrading the CAS plant to achieve Objective B year-round would increase the plant energy requirements by 580,800 kW-hours/year, or about 280 percent, as shown in Table 5-7. Less than 1 percent of this increase would be attributable to the operation of solids processes associated with achieving Objective B. The energy consumption for the upgraded plant would increase by about 2,546 kW-hours per million gallons of influent wastewater treated. Objective B upgrades require about 22 percent more energy than Objective A upgrades.

TABLE 5-7.
ADDITIONAL ENERGY CONSUMPTION FOR UPGRADING CAS PLANT TO ACHIEVE OBJECTIVE B YEAR-ROUND

Yearly Energy Required	
Existing CAS Plant	207,200 kW-hours/year
Objective B Year-Round	788,000 kW-hours/year
Energy Increase for Upgrade	
Annual Quantity	580,800 kW-hours/year
Percent	280%
Increase per Volume of Plant Flow	2,546 kW-hours/MG

Chemical Usage

The upgraded plant to achieve Objective B year-round would require 4,563 gallons of methanol per year for carbon supplementation to drive the denitrification process, or 20 gallons of methanol per million gallons of wastewater treated. Additionally, 8,600 gallon each of 50-percent citric acid and 12.5-percent sodium hypochlorite would be required per year for periodic cleaning of the membranes. This equates to 38 gallons each of citric acid and sodium hypochlorite per million gallons of wastewater treated.

Footprint Requirements

To achieve Objective B, additional facility footprint area is required to accommodate the pre-anoxic tank, the post-anoxic tank, the membrane tank, the blower building for the MBR process and the methanol storage tank and feed system. The total area required for these new process elements for a 1-mgd plant would be approximately 3,300 square feet. Demolition of the existing secondary clarifiers would liberate approximately 2,000 square feet, so an additional 1,300 square feet would be required.

Table 5-8 compares the additional footprint area for upgrading existing CAS plants to achieve Objective B for the three generic plant capacities. Objective B upgrades at larger plants would liberate more site area than required, if all of the secondary clarifiers were demolished. Additional area is not required for the larger plants because the footprint requirement for the blower building does not increase at the same rate as the anoxic tanks and MBR tank size. For some plants, it may be beneficial to retain some of the existing secondary clarifiers to handle unusually high peak flow events. Refer to Appendix C for detailed footprint areas of the existing system and the proposed system.

TABLE 5-8.
ADDITIONAL FOOTPRINT REQUIRED FOR UPGRADING CONVENTIONAL ACTIVATED SLUDGE PLANTS TO ACHIEVE OBJECTIVE B YEAR-ROUND

Plant Design Capacity (mgd)	Additional Area Required for Upgrade (square feet)
1	1,300
10	0
150	(130,000)

Note: Values in parentheses indicate area currently occupied by existing treatment facilities that could become available for future use.

5.2.3 Objective C

Process Description

The upgrade to achieve Objective C (TP <1 mg/L) consists of alum addition for precipitation of phosphorus and magnesium hydroxide addition for pH control. The aluminum phosphate and aluminum hydroxide precipitates would be incorporated into the activated sludge mixed liquor and removed with the waste activated sludge. Storage tanks and feed pumps for alum and magnesium hydroxide would be sized for the usage required during MMWWF. The method for determining alum dosage is described in Section 4.2.3. It was assumed that existing solids facilities have the capacity to accommodate the increased sludge produced by chemical precipitation. Figure 5-4 shows the upgraded process flow schematic. Table 5-2 summarizes the process design data. Detailed Biowin model reports are in Appendix A.

Recycled Loads

Solids treatment for a CAS consists of a thickener for WAS, an anaerobic digester for the combined primary and thickened sludge, and a digested-sludge dewatering system. The percentage of TN and TP returning in the recycle streams from solids processes was calculated using the Biowin model outputs. The results indicate that upgrades to achieve Objective C would have no significant effect (<1 percent) on the quantity of total nitrogen in the recycle streams but would increase the quantity of phosphorus in the recycle streams approximately 41 percent. Table 5-9 summarizes the results.

Sludge Production

With upgrades to achieve Objective C, the overall sludge production for the plant would increase approximately 27 percent to 213 tons/year, or 0.94 dry tons of solids per million gallons of wastewater treated. This increase would be attributable to the presence of the aluminum phosphate and the aluminum hydroxide in the sludge, resulting from the chemical precipitation process. Objective C upgrades would not significantly change the total volatile solids loading to the anaerobic digester; therefore, no changes would be anticipated with regard to methane production by the anaerobic digestion process.

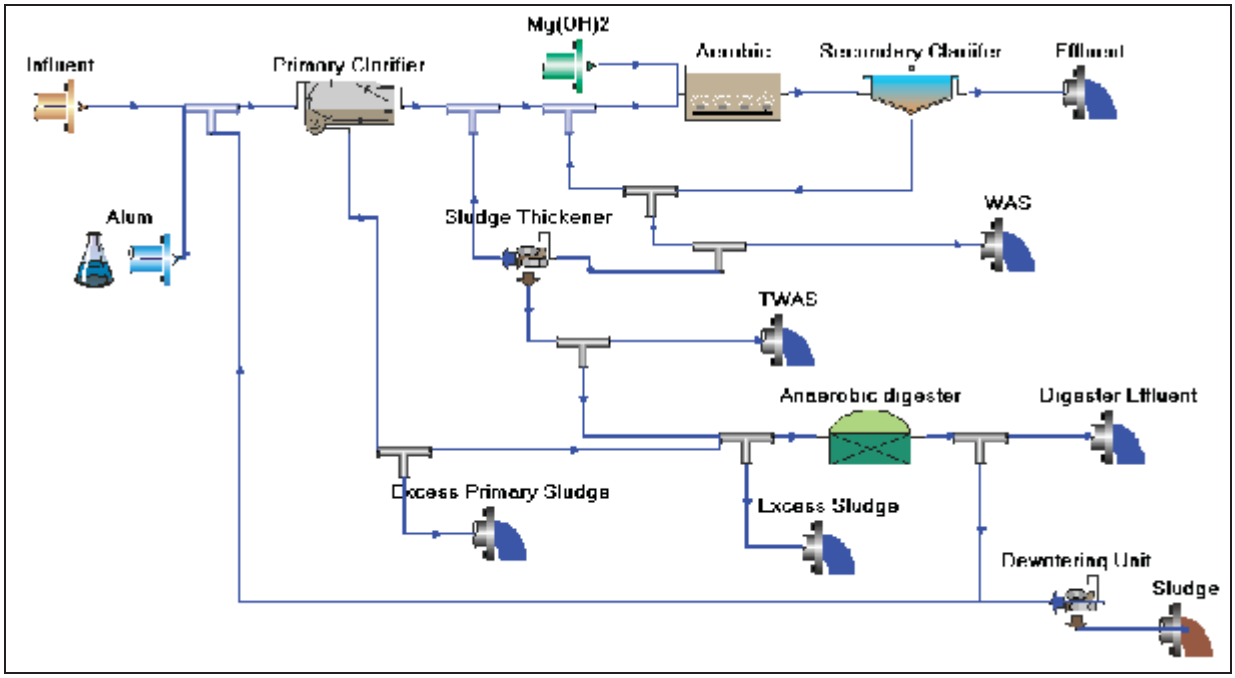

Figure 5-4. Process Schematic of CAS Plant Upgraded for Objective C Year-Round

TABLE 5-9.
NUTRIENT RECYCLING COMPARISON FOR CONVENTIONAL ACTIVATED SLUDGE SYSTEMS, OBJECTIVE C YEAR-ROUND NUTRIENT REMOVAL

	% of TN Recycled		% of TP Recycled	
	AWWF	ADWF	AWWF	ADWF
Existing Plant	22.6%	22.0%	38.2%	40.7%
Objective C Year-Round	23.2%	21.7%	55.7%	56.8%

Energy Consumption

Average annual process air required for the upgraded plant to achieve Objective C plant is about the same as required for the existing CAS plant. The upgrades would increase the energy requirements for the treatment plant by 28,300 kW-hours/year, as shown in Table 5-10. This represents about a 14-percent increase in the annual energy consumption. The increase would be attributable to the operation of chemical feed systems and the extended operation of the solids processes associated with achieving Objective C. The energy consumption for the upgraded plant would increase by about 124 kW-hours per million gallons of influent wastewater treated.

Chemical Usage

The upgraded plant to achieve Objective C year-round would require approximately 43,800 gallons of alum per year to precipitate phosphorus and approximately 16,430 gallons of magnesium hydroxide for pH control. These chemical usage rates equate to 192 gallons of alum per million gallons of wastewater treated and 72 gallons of magnesium hydroxide per million gallons of wastewater treated.

TABLE 5-10.
ADDITIONAL ENERGY CONSUMPTION FOR UPGRADING CAS PLANT TO ACHIEVE OBJECTIVE C YEAR-ROUND

Yearly Energy Required	
Existing CAS Plant	207,200 kW-hours/year
Objective C Year-Round	235,500 kW-hours/year
Energy Increase for Upgrade	
Annual Quantity	28,300 kW-hours/year
Percent	14%
Increase per Volume of Plant Flow	124 kW-hours/MG

Footprint Requirements

Table 5-11 presents the additional site area that would be required for the three generic plant capacities. The additional footprint required for plant upgrades to achieve Objective C would be for the alum and magnesium hydroxide storage tanks and feed systems.

TABLE 5-11.
ADDITIONAL FOOTPRINT REQUIRED FOR UPGRADING CONVENTIONAL ACTIVATED SLUDGE PLANTS TO ACHIEVE OBJECTIVE C YEAR-ROUND

Plant Design Capacity (mgd)	Additional Area Required for Upgrade (square feet)
1	400
10	1,600
150	12,700

5.2.4 Objective D

Process Description

The upgrade evaluated to achieve Objective D (TP <0.1 mg/L) would be to add tertiary filters to the improvements described for Objective C, as shown Figure 5-5. Alum would be added at two locations in the process: at the influent to the primary clarifiers; and after the secondary clarifiers, ahead of the filters. Dirty backwash water from the filters would be returned to the head of the plant. The methodology for determining appropriate alum dosage is described in Section 4.2.4. Table 5-2 summarizes the process design data. Detailed Biowin model reports are in Appendix A.

Recycled Loads

Solids treatment for a CAS consists of a WAS thickener, an anaerobic digester for the combined primary and thickened sludge, and a digested-sludge dewatering unit. The percentage of TN and TP returning from these sludge treatment processes was calculated using Biowin model outputs. The results indicate that implementation of the upgrades to achieve Objective D would have no significant effect on annual nitrogen and phosphorus recycle loads. Table 5-12 summarizes the results.

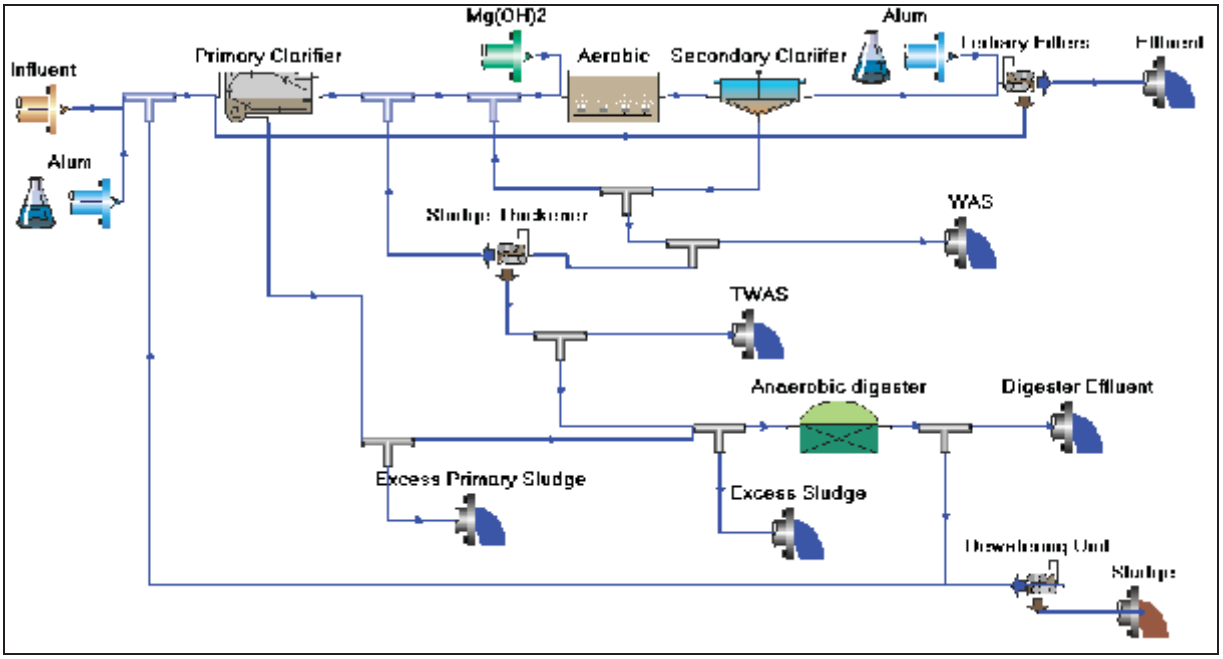

Figure 5-5. Process Schematic of CAS Plant Upgraded for Objective D Year-Round

TABLE 5-12.
NUTRIENT RECYCLING COMPARISON FOR CONVENTIONAL ACTIVATED SLUDGE SYSTEMS, OBJECTIVE D YEAR-ROUND NUTRIENT REMOVAL

	% of TN Recycled		% of TP Recycled	
	AWWF	ADWF	AWWF	ADWF
Existing Plant	22.6%	22.0%	38.2%	40.7%
Objective D Year-Round	23.7%	21.0%	55.3%	23.8%

Sludge Production

With upgrades to achieve Objective D, the overall sludge production for the plant would increase approximately 36 percent to 229 tons/year, or 1.0 dry tons of solids per million gallons of wastewater treated. This increase would be attributable to the presence of the aluminum phosphate and the aluminum hydroxide in the sludge, resulting from the chemical precipitation process. Objective D upgrades would not significantly change the total volatile solids loading to the anaerobic digester; therefore, no changes would be anticipated with regard to methane production by the anaerobic digestion process.

Energy Consumption

Average annual process air required for the upgraded plant to achieve Objective D is about the same as required for the existing CAS plant. The upgrades would increase the annual energy requirements for the treatment plant by 43,800 kW-hours/year, as shown in Table 5-13. This represents a 21-percent increase in the annual energy consumption, or about 192 kW-hours per million gallons of influent wastewater treated. This increase would be attributable to the operation of filters, chemical feed systems and the extended operation of the solids processes associated with achieving Objective D.

TABLE 5-13.
ADDITIONAL ENERGY CONSUMPTION FOR UPGRADING CAS PLANT TO ACHIEVE OBJECTIVE D YEAR-ROUND

Yearly Energy Required	
Existing CAS Plant	207,200 kW-hours/year
Objective D Year-Round	251,000 kW-hours/year
Energy Increase for Upgrade	
Annual Quantity	43,800 kW-hours/year
Percent	21%
Increase per Volume of Plant Flow	192 kW-hours/MG

Chemical Usage

The upgraded plant to achieve Objective D year-round would require approximately 58,400 gallons of alum per year to precipitate phosphorus and approximately 29,200 gallons of magnesium hydroxide for pH control. These chemical usage rates equate to 256 gallons of alum per million gallons of wastewater treated and 128 gallons of magnesium hydroxide per million gallons of wastewater treated.

Footprint Requirements

The new process elements required to achieve Objective D on a year-round basis would include alum and magnesium hydroxide storage tanks and feed systems, and filters to remove suspended and colloidal solids from the secondary effluent. For the modeled 1-mgd plant, the total site area footprint required for new process elements would be approximately 1,200 square feet:

- 200 square feet for alum storage tanks and feed systems
- 150 square feet for magnesium hydroxide storage tanks and feed systems
- 850 square feet for new filters.

Table 5-14 presents the additional site area that would be required for the three generic plant capacities.

TABLE 5-14.
ADDITIONAL FOOTPRINT REQUIRED FOR UPGRADING CONVENTIONAL ACTIVATED SLUDGE PLANTS TO ACHIEVE OBJECTIVE D YEAR-ROUND

Plant Design Capacity (mgd)	Additional Area Required for Upgrade (square feet)
1	1,200
10	10,100
150	139,100

5.2.5 Objective E

Process Description

An existing CAS plant may be upgraded to achieve Objective E (TIN <8 mg/L and TP <1 mg/L) by converting the existing CAS system to an MLE-MBR process as described in Section 5.2.1 and by adding alum and magnesium hydroxide for phosphorus as described in Section 5.2.3. The process flow schematic

for the upgraded plant would be as shown for Objective A plus the addition of alum and magnesium hydroxide to the influent as shown for Objective C.

The biological SRT for Objective E would be less than for Objective A due to increased MLSS concentration resulting from chemical precipitation of phosphorus. Alum dosage values were calculated for soluble PO_4 concentrations in the aeration tank based on the Objective A model. These alum dosages were then entered in Biowin to achieve effluent TP <1 mg/L. Assumptions made for Objectives A and C were also used for this objective. Table 5-2 summarizes the process design data. Detailed Biowin model reports are in Appendix A.

Recycled Loads

The percentage of TN and TP returning from the solids handling and treatment processes were calculated using Biowin model outputs. The results indicate that upgrades to achieve Objective E would reduce the annual quantity of total nitrogen in the recycle streams approximately 29 percent and reduce the annual quantity of phosphorus recycled by 3 percent. Table 5-15 summarizes the results.

TABLE 5-15.
NUTRIENT RECYCLING COMPARISON FOR CONVENTIONAL ACTIVATED SLUDGE SYSTEMS, OBJECTIVE E YEAR-ROUND NUTRIENT REMOVAL

	% of TN Recycled		% of TP Recycled	
	AWWF	ADWF	AWWF	ADWF
Existing Plant	22.6%	22.0%	38.2%	40.7%
Objective E Year-Round	16.5%	15.1%	51.1%	25.0%

Sludge Production

With upgrades to achieve Objective E, the overall sludge production for the plant would increase approximately 27 percent to 216 tons/year, or 0.95 dry tons of solids per million gallons of wastewater treated. This increase would be attributable to the presence of the aluminum phosphate and the aluminum hydroxide in the sludge, resulting from the chemical precipitation process. Objective E upgrades would reduce the total volatile solids loading on the anaerobic digester approximately 11 percent; an equivalent reduction would be anticipated with regard to methane production by the anaerobic digestion process.

Energy Consumption

Average annual process air required for the upgraded plant to achieve Objective E would be approximately 233 percent greater than for the existing CAS plant, about the same as required to achieve Objective A. The additional process air, which is required to satisfy the oxygen demand associated with nitrification and the longer sludge age and to provide air scour of the membranes, accounts for approximately 96 percent of the increased energy demand. The upgrades would increase the total plant annual energy requirements 483,300 kW-hours/year, as shown in Table 5-16. This represents a 233 percent increase in the annual energy consumption, or about 2,119 kW-hours per million gallons of influent wastewater treated.

TABLE 5-16.
ADDITIONAL ENERGY CONSUMPTION FOR UPGRADING CAS PLANT TO ACHIEVE OBJECTIVE E YEAR-ROUND

Yearly Energy Required	
Existing CAS Plant	207,200 kW-hours/year
Objective E Year-Round	690,500 kW-hours/year
Energy Increase for Upgrade	
Annual Quantity	483,300 kW-hours/year
Percent	233%
Increase per Volume of Plant Flow	2,119 kW-hours/MG

Chemical Usage

Year-round nutrient removal to achieve Objective E would require the following chemical usage:

- 180 gallons of alum per million gallons of wastewater treated
- 96 gallons of magnesium hydroxide per million gallons of wastewater treated
- 38 gallons of 50-percent citric acid citric acid per million gallons of wastewater treated
- 38 gallons of 12.5-percent sodium hypochlorite per million gallons of wastewater treated.

Footprint Requirements

This alternative requires all the tanks that are required for Objective A as well as chemical storage tanks for alum and magnesium hydroxide as described for Objective C. Table 5-17 presents the additional site area that would be required for the three generic plant capacities. Refer to Appendix C for detailed footprint areas of the existing system and the proposed system.

TABLE 5-17.
ADDITIONAL FOOTPRINT REQUIRED FOR UPGRADING CONVENTIONAL ACTIVATED SLUDGE PLANTS TO ACHIEVE OBJECTIVE E YEAR-ROUND

Plant Design Capacity (mgd)	Additional Area Required for Upgrade (square feet)
1	400
10	(4,400)
150	(104,500)

Note: Values in parentheses indicate area currently occupied by existing treatment facilities that could become available for future use.

5.2.6 Objective F

Process Description

Objective F (TIN <3 mg/L and TP <0.1 mg/L) can be achieved by converting the existing CAS system to a 4BDP-MBR system and adding methanol, as described for Objective B, and adding alum and magnesium hydroxide, as described for Objective D. The flow schematic for this option is similar to that of Objective B, combined with the addition of alum and magnesium hydroxide, as shown for Objective D.

Alum dosage values were calculated based on the Objective B model for soluble PO_4 concentration in the aeration tank. These alum dosages were entered in Biowin to achieve effluent TP <0.1 mg/L. Assumptions made for Objectives B and D were used for this objective. Similar to Objective E, additional MBR blowers would be required for air scour of membranes. Table 5-2 summarizes the process design data. Detailed Biowin model reports are in Appendix A.

Recycled Loads

The percentage of TN and TP returning from the sludge treatment processes was calculated using Biowin model outputs. Table 5-18 summarizes the results.

TABLE 5-18.
NUTRIENT RECYCLING COMPARISON FOR CONVENTIONAL ACTIVATED SLUDGE SYSTEMS, OBJECTIVE F YEAR-ROUND NUTRIENT REMOVAL

	% of TN Recycled		% of TP Recycled	
	AWWF	ADWF	AWWF	ADWF
Existing Plant	22.6%	22.0%	38.2%	40.7%
Objective F Year-Round	15.7%	15.4%	26.4%	26.5%

Sludge Production

With upgrades to achieve Objective F, the overall sludge production for the plant would increase approximately 37.5 percent to 231 tons/year, or 1.01 dry tons of solids per million gallons of wastewater treated. The increase would be attributable to aluminum phosphate and aluminum hydroxide in the sludge, resulting from chemical precipitation, and from the addition of methanol. Objective E upgrades would reduce total volatile solids in the anaerobic digester approximately 5.6 percent; an equivalent reduction would be anticipated with regard to methane production by the anaerobic digestion process.

Energy Consumption

Average annual process air required for the upgraded plant to achieve Objective F would be approximately 37 percent greater than for the existing CAS plant. The upgrade would increase the annual energy requirements for the treatment plant by 613,100 kW-hours/year, as shown in Table 5-19. This represents a 296-percent increase in the annual energy consumption, or about 2,688 kW-hours per million gallons of influent wastewater treated.

Chemical Usage

Year-round nutrient removal to achieve Objective F would require the following chemical usage:

- 32 gallons of methanol per million gallons of wastewater treated
- 256 gallons of alum per million gallons of wastewater treated
- 96 gallons of magnesium hydroxide per million gallons of wastewater treated
- 38 gallons of 50-percent citric acid citric acid per million gallons of wastewater treated
- 38 gallons of 12.5-percent sodium hypochlorite per million gallons of wastewater treated.

TABLE 5-19.
ADDITIONAL ENERGY CONSUMPTION FOR UPGRADING CAS PLANT TO ACHIEVE OBJECTIVE F YEAR-ROUND

Yearly Energy Required	
Existing CAS Plant	207,200 kW-hours/year
Objective F Year-Round	820,300 kW-hours/year
Energy Increase for Upgrade	
Annual Quantity	613,100 kW-hours/year
Percent	296%
Increase per Volume of Plant Flow	2,688 kW-hours/MG

Footprint Requirements

This alternative requires partitioning of existing tanks and construction of new membrane tanks on the footprint currently occupied by the existing secondary clarifiers. Chemical storage tanks and feed systems for methanol, alum, magnesium hydroxide, citric acid and sodium hypochlorite would also need to be constructed in the area liberated by demolition of the secondary clarifiers. Table 5-20 presents the additional site area that would be required for the three generic plant capacities, assuming that the existing secondary clarifiers are demolished to allow for construction of the new process facilities.

TABLE 5-20.
ADDITIONAL FOOTPRINT REQUIRED FOR UPGRADING CONVENTIONAL ACTIVATED SLUDGE PLANTS TO ACHIEVE OBJECTIVE F YEAR-ROUND

Plant Design Capacity (mgd)	Additional Area Required for Upgrade (square feet)
1	500
10	(3,000)
150	(131,000)

Note: Values in parentheses indicate area currently occupied by existing treatment facilities that could become available for future use.

5.3 SEASONAL NUTRIENT REMOVAL

Improvements required to provide seasonal nutrient removal to achieve each treatment objective are described below. Process design data are included in Table 5-21, attached at the end of this chapter.

5.3.1 Objective A

Process Description

The Objective A (TIN <8 mg/L) treatment process for seasonal nutrient removal would be an MLE system. Unlike the upgrade for year-round treatment for this objective, membrane bioreactors would not be added, and the existing clarifiers would be retained. A new 0.1-MG anoxic tank would be constructed upstream of the existing aeration system. Aeration tank DO concentration would be maintained at 2.0 mg/L. Figure 5-6 shows the upgraded process flow schematic. Table 5-21 summarizes the process design data. Detailed Biowin model reports are in Appendix A.

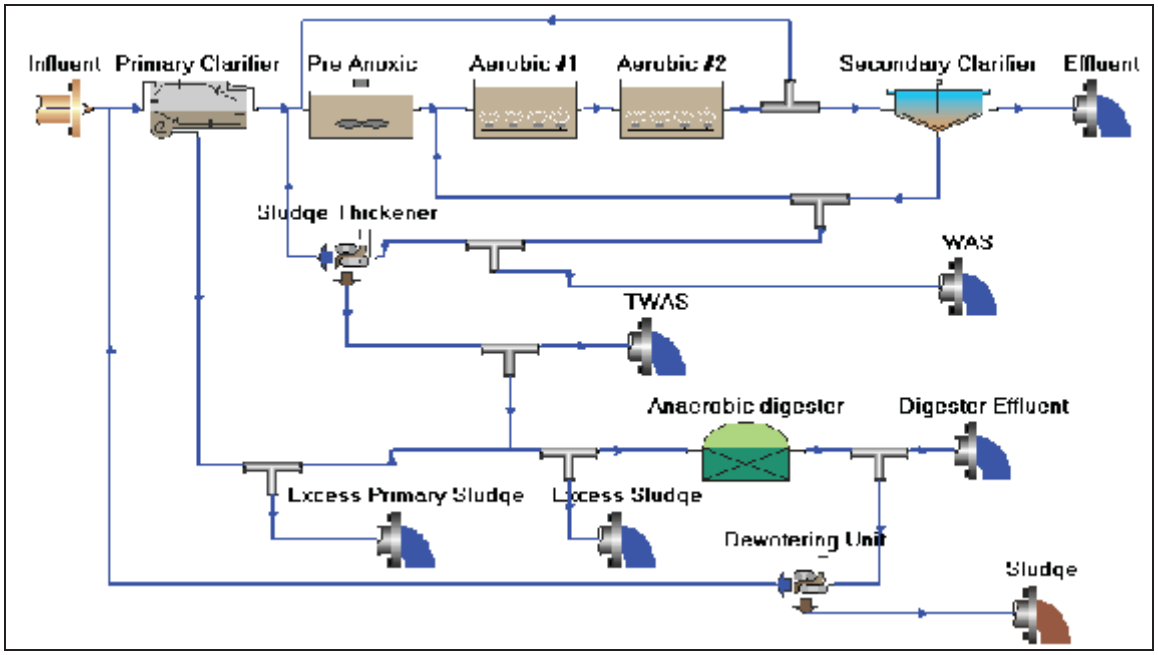

Figure 5-6. Process Schematic of CAS Plant Upgraded for Objective A, Seasonal

In the MLE process, nitrification takes place in the aeration tank, where ammonia is converted into nitrate, and denitrification occurs in the anoxic tank, where the nitrate is converted into nitrite, nitrous oxide and eventually into nitrogen gas. The anoxic tank consists of a mixer for continuous mixing of the influent and the nitrates that are recycled from the aeration tank. The conversion of ammonia nitrogen (NH_3/NH_4^+) to nitrate nitrogen (NO_3^-) is directly dependent on solids retention time. A longer SRT will result in conversion of ammonia to nitrate. SRT is calculated as follows:

- SRT (days) = MLSS in Aeration Tank (lbs)/MLSS Wasted in the Sludge (lbs/day)

In order to achieve Objective A, the SRT of the system should be about 14 days.

Recycled Loads

The percentage of TN and TP returning from the sludge treatment processes was calculated using Biowin model outputs. The modeling results indicate that upgrades to achieve Objective A only during the dry season would reduce the quantity of total nitrogen in the recycle streams during the dry season approximately 32 percent and reduce the quantity of phosphorus approximately 8 percent. This is equivalent to an annual nitrogen recycle load reduction of 12 percent and an annual phosphorus load reduction of 4 percent. Table 5-22 summarizes the results.

Sludge Production

From Tables 5-2 and 5-21, the Objective A seasonal nutrient removal upgrade would reduce average overall sludge production approximately 1 ton per year, to 167 tons per year. This corresponds to an equivalent annual average sludge production of 0.73 tons per million gallons of wastewater treated. The annual average volatile solids loading to the digester would be reduced approximately 6 percent; and a similar reduction would be anticipated in production of digester gas.

TABLE 5-22.
NUTRIENT RECYCLING COMPARISON FOR CONVENTIONAL ACTIVATED SLUDGE SYSTEMS, OBJECTIVE A SEASONAL NUTRIENT REMOVAL

	% of TN Recycled	% of TP Recycled
	ADWF	ADWF
Existing Plant	22.0%	40.7%
Objective A Seasonal	16.7%	37.5%

Energy Consumption

Upgrading the plant for seasonal treatment to achieve Objective A would require a 17-percent increase in the overall annual plant energy requirements, as shown in Table 5-23. This equates to an annual energy increase of 754 kW-hours per million gallons of influent wastewater treated. The additional energy would be attributed to additional process aeration, mixer operation in the anoxic compartment, and internal recycling of mixed liquor from the terminal end of the aeration tank to the inlet of the anoxic tank.

TABLE 5-23.
ADDITIONAL ENERGY CONSUMPTION FOR UPGRADING CAS PLANT TO ACHIEVE OBJECTIVE A SEASONALLY

Yearly Energy Required	
Existing CAS Plant	207,200 kW-hours/year
Objective A, Seasonal	379,200 kW-hours/year
Energy Increase for Upgrade	
Annual Quantity	172,000 kW-hours/year
Percent	17%
Increase per Volume of Plant Flow	754 kW-hours/MG

Chemical Usage

No additional chemicals are required to achieve Objective A on a seasonal basis.

Footprint Requirements

To achieve Objective A seasonally, approximately 1,000 square feet of additional new process footprint area would need to be accommodated:

- 955 square feet for construction of anoxic tanks
- Up to 60 square feet to accommodate the upgrade of the existing process air blower system.

Table 5-24 compares the additional footprint area for upgrading existing CAS plants to achieve Objective A seasonally for the three generic plant capacities.

TABLE 5-24.
ADDITIONAL FOOTPRINT REQUIRED FOR UPGRADING CONVENTIONAL ACTIVATED SLUDGE PLANTS TO ACHIEVE OBJECTIVE A SEASONALLY

Plant Design Capacity (mgd)	Additional Area Required for Upgrade (square feet)
1	1,000
10	10,000
150	150,000

5.3.2 Objective B

Process Description

The treatment plant upgrades modeled for achieving Objective B (TIN <3 mg/L) for dry season nutrient removal included conversion of the CAS system to a four-stage Bardenpho process with the addition of methanol. Refer to Section 4.2.2 for a description of the 4BDP process. The first half of the existing aeration tank (0.1 MG) would be converted to an anoxic reactor and the second half would be fully aerated. New tankage would need to be constructed to provide the additional aerobic reactor (0.1 MG), the post-anoxic reactor (0.05 MG), and the post-aeration (nitrogen gas stripping) reactor (0.05 MG). Methanol would be added to the post-anoxic tank to provide the necessary carbon source to drive the denitrification process. Figure 5-7 shows the upgraded process flow schematic. Table 5-21 summarizes the process design data. Detailed Biowin model reports are in Appendix A.

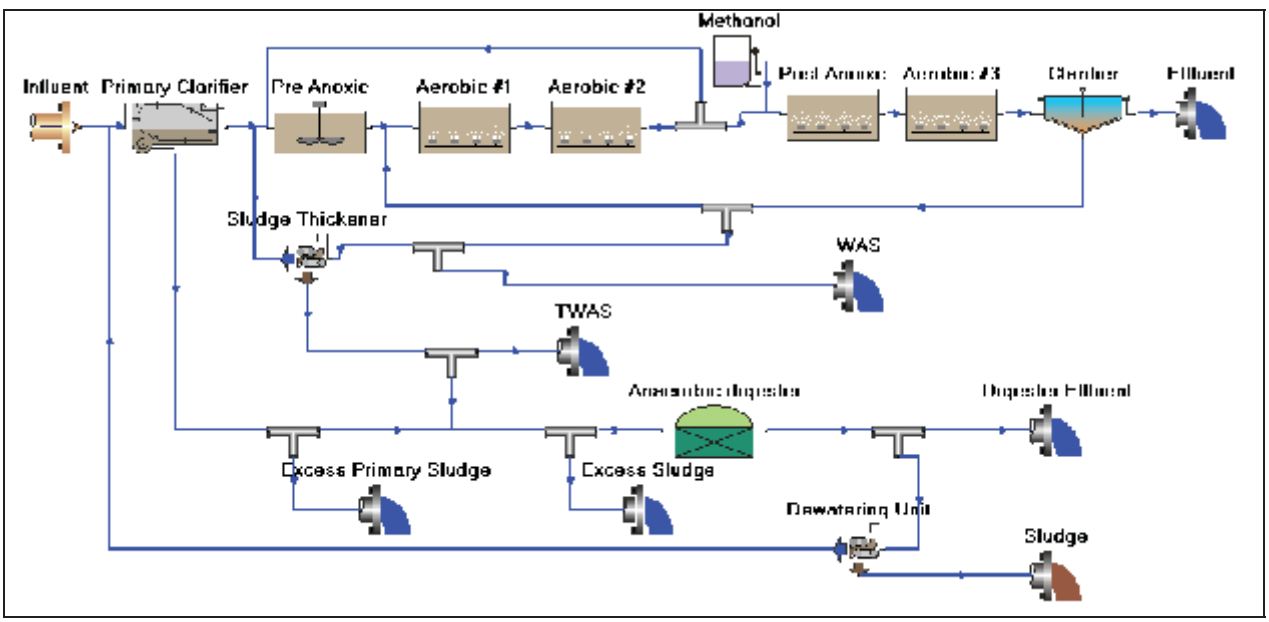

Figure 5-7. Process Schematic of CAS Plant Upgraded for Objective B, Seasonal

Recycled Loads

The percentage of TN and TP returning from the solids handling and dewatering treatment processes relative to the raw influent plant loads was calculated using Biowin model outputs. The results indicate that upgrades to achieve Objective B on a seasonal basis would reduce the quantity of total nitrogen in the recycle streams during the dry-weather period approximately 23 percent—only 11 percent on an annual

basis. The upgrades would increase the quantity of total phosphorus in the recycle streams approximately 40 percent during the dry weather period and 20 percent on an annual basis. Table 5-25 summarizes the results.

TABLE 5-25.
NUTRIENT RECYCLING COMPARISON FOR CONVENTIONAL ACTIVATED SLUDGE SYSTEMS, OBJECTIVE B SEASONAL NUTRIENT REMOVAL

	% of TN Recycled	% of TP Recycled
	ADWF	ADWF
Existing Plant	22.0%	40.7%
Objective B Seasonal	17.0%	56.8%

Sludge Production

From Table 5-2 and 5-21, the Objective B seasonal nutrient removal upgrade would not significantly change the average overall sludge production. However, the upgrades would reduce the average annual volatile solids loading on the digesters approximately 5 percent. Consequently, digester gas production would be reduced by an equivalent percentage.

Energy Consumption

Upgrading the plant for seasonal treatment to achieve Objective B would require an 18-percent increase in the overall plant energy requirements, as shown in Table 5-26. This equates to an annual energy increase of 815 kW-hours per million gallons of influent wastewater treated. The additional energy would be attributed to additional process aeration, mixer operation in the anoxic compartments, and internal recycling of mixed liquor from the terminal end of the aeration tank to the inlet of the anoxic tank.

Chemical Usage

Upgrading the plant for seasonal nutrient removal to achieve Objective B would require 1,825 gallons of methanol per year, which would be equivalent to annual use of 8 gallons of methanol per million gallons of influent wastewater treated.

TABLE 5-26.
ADDITIONAL ENERGY CONSUMPTION FOR UPGRADING CAS PLANT TO ACHIEVE OBJECTIVE B SEASONALLY

Yearly Energy Required	
Existing CAS Plant	207,200 kW-hours/year
Objective B, Seasonal	393,200 kW-hours/year
Energy Increase for Upgrade	
Annual Quantity	186,000 kW-hours/year
Percent	18%
Increase per Volume of Plant Flow	815 kW-hours/MG

Footprint Requirements

To achieve Objective B seasonally, the following additional facility footprint area is required:

- 955 square feet of anoxic tank
- 480 square feet of post-anoxic tank
- Up to 60 additional square feet for expansion of the existing process air blower building
- 100 square feet of methanol storage tanks and containment to store methanol for two weeks (refer to detailed calculations in Appendix B).

Table 5-27 compares the additional footprint area for upgrading existing CAS plants to achieve Objective B seasonally for the three generic plant capacities.

TABLE 5-27.
ADDITIONAL FOOTPRINT REQUIRED FOR UPGRADING CONVENTIONAL ACTIVATED SLUDGE PLANTS TO ACHIEVE OBJECTIVE B SEASONALLY

Plant Design Capacity (mgd)	Additional Area Required for Upgrade (square feet)
1	1,600
10	16,000
150	225,000

5.3.3 Objective C

Process Description

To achieve Objective C at CAS plants, the only difference between the year-round and the seasonal nutrient removal is that the chemical storage and feeding system upgrades would be sized for MMDWF instead of the MMWWF. Table 5-21 summarizes the process design data. Detailed Biowin model reports are in Appendix A.

Recycled Loads

The percentage of TN and TP returning from the solids handling and dewatering treatment processes relative to the raw influent plant loads were calculated using Biowin model outputs. Upgrades to achieve Objective C on a seasonal basis would reduce the quantity of total phosphorus in the recycle streams during the dry weather period approximately 40 percent—about 20 percent on an annual basis. The upgrades would reduce the quantity of total nitrogen in the recycle streams during the dry weather period approximately 23 percent during the dry weather period, about 11 percent on an annual basis. Table 5-28 summarizes the results.

Sludge Production

From Tables 5-2 and 5-21, the average sludge produced by the upgraded plant to achieve Objective C seasonally would be 193 tons per year. This is a 15-percent increase compared to the existing plant but 10 percent less sludge than produced by upgrades for year-round nutrient removal to achieve Objective C. The upgrades would not significantly affect the average annual volatile solids loading on the digesters; therefore, no significant changes would be anticipated in the production of digester gas.

TABLE 5-28.
NUTRIENT RECYCLING COMPARISON FOR CONVENTIONAL ACTIVATED SLUDGE SYSTEMS, OBJECTIVE C SEASONAL NUTRIENT REMOVAL

	% of TN Recycled	% of TP Recycled
	ADWF	ADWF
Existing Plant	22.0%	40.7%
Objective C Seasonal	21.7%	56.8%

Energy Consumption

The annual energy requirements for the upgraded treatment plant to achieve Objective C seasonally would increase 25,100 kW-hours/year as shown in Table 5-29. This represents an increase in the annual energy consumption of approximately 12 percent, or 110 kW-hours per million gallons of influent wastewater treated.

TABLE 5-29.
ADDITIONAL ENERGY CONSUMPTION FOR UPGRADING CAS PLANT TO ACHIEVE OBJECTIVE C SEASONALLY

Yearly Energy Required	
Existing CAS Plant	207,200 kW-hours/year
Objective C, Seasonal	232,300 kW-hours/year
Energy Increase for Upgrade	
Annual Quantity	25,100 kW-hours/year
Percent	12%
Increase per Volume of Plant Flow	110 kW-hours/MG

Chemical Usage

The upgraded plant for seasonal removal of phosphorus to achieve Objective C would require 23,725 gallons of alum per year to precipitate phosphorus and 16,430 gallons of magnesium hydroxide for pH control. These chemical usage rates equate to 104 gallons of alum and 72 gallons of magnesium hydroxide per million gallons of wastewater treated.

Footprint Requirements

The additional process elements required for plant upgrades to achieve Objective C seasonally are alum and magnesium hydroxide storage tanks and feed systems. The additional site area required for these systems would be the same as presented for the year-round model as shown in Table 5-11.

5.3.4 Objective D

Process Description

To achieve Objective D only during the dry season would require upgrades similar to those for Objective D year-round. Nutrient removal processes would be sized for the MMDWF instead of the MMWWF. Refer to the Section 5.2.4 for a detailed process description. Table 5-21 summarizes the process design data. Detailed Biowin model reports are in Appendix A.

Recycled Loads

The percentage of TN and TP returning from the solids handling and dewatering processes relative to the influent plant loads was calculated using Biowin outputs. Upgrades to achieve Objective D on a seasonal basis would reduce the quantity of total phosphorus in the recycle streams during the dry weather period approximately 42 percent—about 27 percent on an annual basis. Implementation of Objective D on a seasonal basis would reduce the quantity of total nitrogen in the recycle streams approximately 5 percent during the dry weather period, or 4 percent on an annual basis. Table 5-30 summarizes the results.

TABLE 5-30.
NUTRIENT RECYCLING COMPARISON FOR CONVENTIONAL ACTIVATED SLUDGE SYSTEMS, OBJECTIVE D SEASONAL NUTRIENT REMOVAL

	% of TN Recycled	% of TP Recycled
	ADWF	ADWF
Existing Plant	22.0%	40.7%
Objective D Seasonal	21.0%	23.8%

Sludge Production

From Tables 5-2 and 5-21, the average sludge produced by the upgraded 1-mgd modeled plant to achieve Objective D only during the dry-weather season would be 198 tons per year, or 0.87 tons per million gallons treated on an annual basis. This represents a 16-percent increase in sludge production compared to the existing plant but 15 percent less sludge than produced by implementation of Objective D year-round. The upgrades would not significantly affect the average annual volatile solids loading on the digesters; therefore, no significant changes would be anticipated in the production of digester gas.

Energy and Chemical Usage

Upgrades to achieve Objective D seasonally would increase the energy requirements for the treatment plant by 26,100 kW-hours/year, as shown in Table 5-31. This represents a 13-percent increase annually, or 114 kW-hours per million gallons of influent wastewater. The increase would be attributable to the operation of filters and chemical feed systems and the extended operation of the solids processes.

Chemical Usage

For seasonal nutrient removal to achieve Objective D, a 1-mgd plant would require 29,200 gallons of alum per year to precipitate phosphorus and 18,250 gallons of magnesium hydroxide for pH control. These chemical usage rates translate to 128 gallons of alum per million gallons of wastewater treated and 80 gallons of magnesium hydroxide per million gallons of wastewater treated.

Footprint Requirements

The process elements that need to be constructed to achieve Objective D seasonally include alum and magnesium hydroxide storage tanks and secondary effluent filters. The footprint of the chemical storage and feeding systems would be the same as for the year-round nutrient removal upgrades; the area required for the filters would be less because they would only need to treat the maximum dry-weather flow, not the maximum wet-weather flow. Table 5-32 compares the additional footprint area for upgrading existing CAS plants to achieve Objective D seasonally for the three generic plant capacities.

TABLE 5-31.
ADDITIONAL ENERGY CONSUMPTION FOR UPGRADING CAS PLANT TO ACHIEVE OBJECTIVE D SEASONALLY

Yearly Energy Required	
Existing CAS Plant	207,200 kW-hours/year
Objective D, Seasonal	233,300 kW-hours/year
Energy Increase for Upgrade	
Annual Quantity	26,100 kW-hours/year
Percent	13%
Increase per Volume of Plant Flow	114 kW-hours/MG

TABLE 5-32.
ADDITIONAL FOOTPRINT REQUIRED FOR UPGRADING CONVENTIONAL ACTIVATED SLUDGE PLANTS TO ACHIEVE OBJECTIVE D SEASONALLY

Plant Design Capacity (mgd)	Additional Area Required for Upgrade (square feet)
1	1000
10	7,500
150	99,500

5.3.5 Objective E

Process Description

To achieve Objective E (TIN <8 mg/L and TP <1 mg/L) only during the dry-weather season would require conversion of the existing CAS plant to an MLE process and adding alum and magnesium hydroxide for chemical precipitation of phosphorus. Conversion to an MLE plant would require doubling the capacity of the existing mixed liquor tanks. In the case of the 1-mgd modeled facility, this would consist of adding 0.1 MG of tankage for an anoxic reactor prior to aeration, a 0.05-MG post-anoxic tank, and a 0.05-MG post-aeration tank. The alum and magnesium hydroxide tanks for this objective would be sized based on MMDWF instead of MMWWF. Table 5-21 summarizes the process design data.

Recycled Loads

The percentage of TN and TP returning from the solids handling and dewatering treatment processes relative to the raw influent plant loads were calculated using Biowin model outputs. Upgrades to achieve Objective E on a seasonal basis would reduce the quantity of total nitrogen in the recycle streams approximately 25 percent during the dry weather period, or 14 percent on an annual basis. The upgrades would increase the quantity of total phosphorus in the recycle streams approximately 19 percent during the dry weather period, which is equivalent to a 10-percent increase on an annual basis. Table 5-33 summarizes the results.

TABLE 5-33.
NUTRIENT RECYCLING COMPARISON FOR CONVENTIONAL ACTIVATED SLUDGE SYSTEMS, OBJECTIVE E SEASONAL NUTRIENT REMOVAL

	% of TN Recycled	% of TP Recycled
	ADWF	ADWF
Existing Plant	22.0%	40.7%
Objective E Seasonal	16.5%	48.5%

Sludge Production

From Tables 5-2 and 5-21, average sludge produced by the upgraded 1 mgd model plant to achieve Objective E only during the dry-weather season would be 191 tons per year, or 0.83 tons per million gallons treated on an annual basis. This is a 17-percent increase in sludge production compared to the existing plant but 13 percent less sludge than produced by implementation of Objective E year-round. The upgrades would result in an annual reduction of 5 percent in the volatile solids loading on the digesters, with an equivalent reduction in the annual production of digester gas.

Energy Consumption

Upgrades to achieve Objective E only during the dry season would increase the annual energy requirements for the treatment plant by 183,000 kW-hours/year, as shown in Table 5-34. This is an 88-percent increase in the annual energy plant consumption, or 802 kW-hours per million gallons of influent wastewater treated. The increase would be attributable to additional aeration, mixers in the anoxic reactors, internal mixed liquor recycle pumps, chemical feed systems, and extended operation of the solids processes.

TABLE 5-34.
ADDITIONAL ENERGY CONSUMPTION FOR UPGRADING CAS PLANT TO ACHIEVE OBJECTIVE E SEASONALLY

Yearly Energy Required	
Existing CAS Plant	207,200 kW-hours/year
Objective E, Seasonal	390,200 kW-hours/year
Energy Increase for Upgrade	
Annual Quantity	183,000 kW-hours/year
Percent	88%
Increase per Volume of Plant Flow	802 kW-hours/MG

Chemical Usage

Upgrades to achieve Objective E seasonally would require storage and feed systems for alum and magnesium hydroxide:

- 104 gallons of alum per million gallons of wastewater treated annually
- 61 gallons of magnesium hydroxide per million gallons of wastewater treated annually.

Footprint Requirements

This alternative requires all the tanks that are required for Objective A (seasonal) and chemical storage tanks and feed systems for alum and magnesium hydroxide identified for Objective C (seasonal). Table 5-35 compares the additional footprint area for upgrading existing CAS plants to achieve Objective E seasonally for the three generic plant capacities.

TABLE 5-35.
ADDITIONAL FOOTPRINT REQUIRED FOR UPGRADING CONVENTIONAL ACTIVATED SLUDGE PLANTS TO ACHIEVE OBJECTIVE E SEASONALLY

Plant Design Capacity (mgd)	Additional Area Required for Upgrade (square feet)
1	1,400
10	11,600
150	162,700

5.3.6 Objective F

Process Description

Objective F (TIN <3 mg/L and TP <0.1 mg/L) can be achieved by converting the existing CAS system into a 4BDP process, adding methanol, alum and magnesium hydroxide, and providing tertiary filtration. The alum and magnesium hydroxide tanks would be sized based on the MMDWF instead of the MMWWF. Table 5-21 summarizes the process design data. Detailed Biowin model reports are in Appendix A.

Recycled Loads

The percentage of TN and TP recycled from the solids handling and dewatering treatment processes relative to the raw influent plant loads were calculated using Biowin model outputs. Upgrades to achieve Objective F on a seasonal basis would reduce the quantity of total nitrogen in the recycle streams approximately 31 percent during the dry weather period, or 15.5 percent on an annual basis. The upgrades would reduce the quantity of total phosphorus in the recycle streams approximately 40 percent during the dry weather period and 28 percent on an annual basis. Table 5-36 summarizes the results.

TABLE 5-36.
NUTRIENT RECYCLING COMPARISON FOR CONVENTIONAL ACTIVATED SLUDGE SYSTEMS, OBJECTIVE F SEASONAL NUTRIENT REMOVAL

	% of TN Recycled	% of TP Recycled
	ADWF	ADWF
Existing Plant	22.0%	40.7%
Objective F Seasonal	15.1%	24.6%

Sludge Production

From Tables 5-2 and 5-21, the average sludge produced by the upgraded 1 mgd model plant to achieve Objective E only during the dry weather season would be 198 tons per year, or 0.87 tons per million gallons treated on an annual basis. This is an 18-percent increase in sludge production compared to the existing plant, but approximately 14 percent less sludge than produced by implementation of Objective F year-round. The upgrades would result in an annual reduction of 5 percent in the volatile solids loading on the digesters, and an equivalent reduction in the annual production of digester gas.

Energy Consumption

Upgrades to achieve Objective F for the dry season only would increase the annual energy requirements for the treatment plant by 207,100 kW-hours/year, as shown in Table 5-37. This is a 100-percent increase in the annual energy plant consumption, or 908 kW-hours per million gallons of influent wastewater treated. The increase would be attributable to additional aeration, mixers in the anoxic reactors, internal mixed liquor recycle pumps, chemical feed systems and extended operation of the solids processes.

TABLE 5-37.
ADDITIONAL ENERGY CONSUMPTION FOR UPGRADING CAS PLANT TO ACHIEVE OBJECTIVE F SEASONALLY

Yearly Energy Required	
Existing CAS Plant	207,200 kW-hours/year
Objective F, Seasonal	414,300 kW-hours/year
Energy Increase for Upgrade	
Annual Quantity	207,100 kW-hours/year
Percent	100%
Increase per Volume of Plant Flow	908 kW-hours/MG

Chemical Usage

Implementation of upgrades to achieve Objective F would require storage and feed systems for methanol, alum and magnesium hydroxide:

- 8 gallons of methanol per million gallons of wastewater treated annually
- 140 gallons of alum per million gallons of wastewater treated annually
- 80 gallons of magnesium hydroxide per million gallons of wastewater treated annually.

Footprint Requirements

This alternative requires all the mixed liquor tanks and methanol storage tanks and feed systems required to upgrade the plant to achieve Objective B during the dry weather season; in addition, it requires the tertiary filters and alum and chemical storage tanks described for implementation of Objective D during the dry weather season. Table 5-38 compares the additional footprint area for upgrading existing CAS plants to achieve Objective F seasonally for the three generic plant capacities.

TABLE 5-38.
ADDITIONAL FOOTPRINT REQUIRED FOR UPGRADING CONVENTIONAL ACTIVATED SLUDGE PLANTS TO ACHIEVE OBJECTIVE F SEASONALLY

Plant Design Capacity (mgd)	Additional Area Required for Upgrade (square feet)
1	2,100
10	23,500
150	259,500

TABLE 5-2
CONVENTIONAL ACTIVATED SLUDGE PLANT BIOWIN RESULTS FOR YEAR-ROUND NUTRIENT REMOVAL

	PROCESS DESIGN - MMWW FLOWS							WET SEASON - AWW FLOWS							DRY SEASON - ADW FLOWS						
	Existing CAS	Upgraded Plant						Existing CAS	Upgraded Plant						Existing CAS	Upgraded Plant					
Description	Plant	Obj. A	Obj. B	Obj. C	Obj. D	Obj. E	Obj. F	Plant	Obj. A	Obj. B	Obj. C	Obj. D	Obj. E	Obj. F	Plant	Obj. A	Obj. B	Obj. C	Obj. D	Obj. E	Obj. F
Nutrient Removal Goals																					
TIN (mg/L)		< 8	< 3			< 8	< 3		< 8	< 3			< 8	< 3		< 8	< 3			< 8	< 3
TP (mg/L)				< 1	< 0.1	< 1	< 0.1				< 1	< 0.1	< 1	< 0.1				< 1	< 0.1	< 1	< 0.1
Plant Size, Average Temperature																					
Influent Flow, mgd	1.0	1.0	1.0	1.0	1.0	1.0	1.0	0.75	0.75	0.75	0.75	0.75	0.75	0.75	0.50	0.50	0.50	0.50	0.50	0.50	0.50
Temp, ^{o}C	10	10	10	10	10	10	10	10	10	10	10	10	10	10	15	15	15	15	15	15	15
Influent																					
BOD	165	165	165	165	165	165	165	221	221	221	221	221	221	221	331	331	331	331	331	331	331
TSS	188	188	188	188	188	188	188	251	251	251	251	251	251	251	376	376	376	376	376	376	376
VSS	132	132	132	132	132	132	132	176	176	176	176	176	176	176	263	263	263	263	263	263	263
TKN	24	24	24	24	24	24	24	32	32	32	32	32	32	32	48	48	48	48	48	48	48
TP	5.7	5.7	5.7	5.7	5.7	5.7	5.7	7.6	7.6	7.6	7.6	7.6	7.6	7.6	11.4	11.4	11.4	11.4	11.4	11.4	11.4
Alkalinity	2.01	2.01	2.01	2.01	2.01	2.01	2.01	2.68	2.68	2.68	2.68	2.68	2.68	2.68	4	4	4	4	4	4	4
pH	6.8	6.8	6.8	6.8	6.8	6.8	6.8	6.8	6.8	6.8	6.8	6.8	6.8	6.8	7	7	7	7	7	7	7
Primary Clarifier																					
Area, ft^2	1,020	1,020	1,020	1,020	1,020	1,020	1,020	1,020	1,020	1,020	1,020	1,020	1,020	1,020	1,020	1,020	1,020	1,020	1,020	1,020	1,020
Surface Overflow Rate, gal/ft^2	979	979	979	979	979	979	979	734	734	734	734	734	734	734	490	490	490	490	490	490	490
Aerobic Tank																					
Tank Volume, MG	0.2	0.2	0.2	0.2	0.2	0.2	0.2	0.2	0.2	0.2	0.2	0.2	0.2	0.2	0.2	0.2	0.2	0.2	0.2	0.2	0.2
HRT, hrs	4.8	4.8	4.8	4.8	4.8	4.8	4.8	6.4	6.4	6.4	6.4	6.4	6.4	6.4	9.6	9.6	9.6	9.6	9.6	9.6	9.6
MLSS Conc., mg/L	2,046	4,925	4,784	2,483	2,389	4,637	4,619	2,208	4,954	5,253	2,676	2,624	5,111	5,161	2,235	4,929	4,954	2,608	2,575	5,110	4,920
DO Concentration, mg/L	1	2, 0.5	2, 0.5	1	1	2, 0.5	2, 0.5	1	2, 0.5	2, 0.5	1	1	2, 0.5	2, 0.5	1	2, 0.5	2, 0.5	1	1	2, 0.5	2, 0.5
Air Supply Rate, ft^3/min	336	589	572	352	325	567	560	389	615	581	338	347	597	589	528	685	659	588	558	660	636
BioWin SRT, days	5.25	23.35	24.71	5.25	5.25	16.55	17.41	5.24	23.21	27.35	5.22	5.24	17.91	19.75	5.24	23.89	27.1	5.25	5.24	18.48	19.77
RAS Recyle Rate	0.5Q	1.5Q	1.5Q	0.5Q	0.5Q	1.5Q	1.5Q	0.5Q	1.5Q	1.5Q	0.5Q	0.5Q	1.5Q	1.5Q	0.5Q	1.5Q	1.5Q	0.5Q	0.5Q	1.5Q	1.5Q
Pre - Anoxic Tank																					
Tank Volume, MG		0.1	0.1						0.1	0.1			0.1	0.1		0.1	0.1			0.1	0.1
HRT, hrs		2.4	2.4						3.2	3.2			3.2	3.2		4.8	4.8			4.8	4.8
Internal Recycle Rate		5Q	5Q						5Q	5Q			5Q	5Q		5Q	5Q			5Q	5Q
Post - Anoxic Tank																					
Tank Volume, MG			0.05							0.05				0.05			0.05				0.05
HRT, hrs			1.2							1.6				1.6			2.4				2.4
Membrane Bioreactor																					
Tank Volume, MG		0.02	0.02			0.02	0.02		0.02	0.02			0.02	0.02		0.02	0.02			0.02	0.02
No. of Cassettes		4	4			4	4		4	4			4	4		4	4			4	4
Area of each Cassette, ft^2		16,320	16,320			16,320	16,320		16,320	16,320			16,320	16,320		16,320	16,320			16,320	16,320
HRT, hrs		0.48	0.48			0.48	0.48		0.64	0.64			0.64	0.64		0.96	0.96			0.96	0.96
MLSS Conc., mg/L		8,200	7,967			8,733	8,730		8,247	8,746			8,520	8,385		8,200	8,242			8,516	8,200
DO Concentration, mg/L		6	6			6	6		6	6			6	6		6	6			6	6
Air Supply Rate, ft^3/min		595.4	745			566	871		512	569			508	588		450	461			456	482
Membrane Flux, gpd/ft^2		15.31	15.31			15.31	15.31		11.48	11.48			11.48	11.49		7.65	7.65			7.65	7.66

TABLE 5-2
CONVENTIONAL ACTIVATED SLUDGE PLANT BIOWIN RESULTS FOR YEAR-ROUND NUTRIENT REMOVAL

	PROCESS DESIGN - MMWW FLOWS							WET SEASON - AWW FLOWS							DRY SEASON - ADW FLOWS						
	Existing CAS Plant	Upgraded Plant						Existing CAS Plant	Upgraded Plant						Existing CAS Plant	Upgraded Plant					
Description		Obj. A	Obj. B	Obj. C	Obj. D	Obj. E	Obj. F		Obj. A	Obj. B	Obj. C	Obj. D	Obj. E	Obj. F		Obj. A	Obj. B	Obj. C	Obj. D	Obj. E	Obj. F
Clarifier																					
Area, ft^2	1,450			1,450	1,450			1,450			1,450	1,450			1,450			1,450	1,450		
Surface Overflow Rate, gal/ft^2	689			689	689			517			517	517			345			345	345		
Tertiary Filters																					
Filter Area, ft2					552		552					552		552					552		552
Chemical Addition																					
Methanol, gpd			20				30			15				30			10				10
Alum Dosage, gpd				90	160	90	160				90	160	95	160				130	160	130	160
Magnesium Hydroxide Dosage, gpd				40	80	60	60					60	60	60				90	100	60	60
Magnesium Hydroxide Conc., meq/L												14,500	14,500	14,500				14,500	14,500	14,500	14,500
Anaerobic Digester																					
TSS wasted from Aerobic Tank, ppd	650	552	588	792	760	733	805	691	559	583	854	835	748	794	712	541	555	831	821	725	756
TSS loading to Digester, ppd	1,779	1,684	1,721	2,016	2,179	1,964	2,100	1,820	1,690	1,810	2,082	2,219	1,979	2,091	1,837	1,666	1,681	2,160	2,190	1,976	2,045
VS loading to Digester, ppd								1,254	1,107	1,176	1,255	1,283	1,133	1,159	1,255	1,090	1,097	1,259	1,269	1,112	1,119
Volume, MG	0.15	0.15	0.15	0.15	0.15	0.15	0.15	0.15	0.15	0.15	0.15	0.15	0.15	0.15	0.15	0.15	0.15	0.15	0.15	0.15	0.15
Hydraulic Residence Time, days	19.8	19.8	19.8	19.7	19.8	19.8	19.8	26.3	26.4	26.4	26.3	24.8	26.3	26.2	39.1	39.4	39.4	39.1	37.3	39.3	39.3
Sludge Production																					
Sludge Production, ppd	936	975	993	1,136	1,283	1,188	1,312	931	955	1,015	1,154	1,262	1,179	1,290	913	955	924	1,186	1,243	1,191	1,241
Effluent																					
BOD, mg/L	6.79	0.85	1.1	6.12	6.79	0.86	1.42	5.14	0.84	0.93	4.8	2.56	0.87	1.51	3.61	0.79	0.81	3.4	2.1	0.9	0.94
TSS, mg/L	12.8	0.0	0.0	13.4	12.8	0	0	8.9	0.0	0.0	9.2	5.2	0.0	0.0	5.5	0.0	0.0	5.6	1.2	0.0	0
Total Phosphorous, mg/L	4.27	4.29	4.16	0.64	4.27	0.32	0.01	5.73	5.81	5.69	0.41	0.08	0.22	0.01	8.75	8.89	8.76	0.25	0.04	0.01	0.01
Ammonia N, mg/L	15	0.4	0.55	13.9	15	0.35	0.86	16.71	0.27	0.34	21.49	20.9	0.29	0.6	11.08	0.07	0.09	4.84	6.84	0.1	0.16
TIN, mg/L	15.59	4.29	1.78	15.48	15.59	4.64	3	21.45	5.26	1.61	21.64	21.63	5.5	2.83	32.89	7.81	1.76	32.87	32.52	7.94	2.2
pH	6.58	6.28	6.41	6.58	6.58	6.58	6.5	6.59	6.39	6.52	6.53	6.56	6.6	6.62	6.27	6.57	6.71	6.42	6.48	6.56	6.68
Recycle Loads																					
Nitrogen Recycle from Thickener, ppd	9.34	5.31	5.78	9.34	9.65	6	6.6	10.12	5.43	5.42	10.72	10.74	5.92	6.36	9.49	5.17	5.28	8.79	9	5.61	5.72
Nitrogen Recycle from Digester, ppd	34	24	25	33.2	33.37	25	26	35	25	24.33	35.7	36.7	27	25	34.41	24	24.22	34.6	33	24.5	25
Total Nitrogen Recycled, ppd	43.34	29.31	30.78	42.54	43.02	31	32.6	45.12	30.43	29.75	46.42	47.44	32.92	31.36	43.9	29.17	29.5	43.39	42	30.11	30.72
Total Phosphorus Recycle from Thickener, ppd	2.37	1.96	2.72	5.94	3.29	6	4.2	3.15	2.12	2.54	6.48	5.02	6.29	4.17	3.54	2.26	2.72	5.12	3.26	3.77	4.2
Total Phosphorus Recycle from Digester, ppd	14	10.42	13.67	19.3	12	17	8.4	15	11	13	20	21.3	18	8.4	15.82	11.27	13.38	21.9	8.07	8.1	8.4
Total Phosphorus Recycled, ppd	16.37	12.38	16.39	25.24	15.29	23	12.6	18.15	13.12	15.54	26.48	26.32	24.29	12.57	19.36	13.53	16.1	27.02	11.33	11.87	12.6
% TN Recycled	21.7%	14.7%	15.4%	21.3%	21.5%	15.5%	16.3%	22.6%	15.2%	14.9%	23.2%	23.7%	16.5%	15.7%	22.0%	14.6%	14.8%	21.7%	21.0%	15.1%	15.4%
% TP Recycled	34.4%	26.0%	34.5%	53.1%	32.1%	48.3%	26.5%	38.2%	27.6%	32.7%	55.7%	55.3%	51.1%	26.4%	40.7%	28.4%	33.8%	56.8%	23.8%	25.0%	26.5%

TABLE 5-21

CONVENTIONAL ACTIVATED SLUDGE PLANT BIOWIN RESULTS FOR SEASONAL NUTRIENT REMOVAL

	PROCESS DESIGN - MMDW FLOWS							DRY SEASON - ADW FLOWS						
	Existing CAS Plant	Upgraded Plant						Existing CAS Plant	Upgraded Plant					
Description		Obj. A	Obj. B	Obj. C	Obj. D	Obj. E	Obj. F		Obj. A	Obj. B	Obj. C	Obj. D	Obj. E	Obj. F
Nutrient Removal Goals														
TIN (mg/L)		< 8	< 3			< 8	< 3		< 8	< 3			< 8	< 3
TP (mg/L)				< 1	< 0.1	< 1	< 0.1				< 1	< 0.1	< 1	< 0.1
Plant Size, Average Temperature														
Influent Flow, mgd	0.69	0.69	0.69	0.69	0.69	0.69	0.69	0.50	0.50	0.50	0.50	0.50	0.50	0.50
Temp, ^{o}C	15	15	15	15	15	15	15	15	15	15	15	15	15	15
Influent														
BOD	241	241	241	241	241	241	241	331	331	331	331	331	331	331
TSS	273	273	273	273	273	273	273	376	376	376	376	376	376	376
VSS	191	191	191	191	191	191	191	263	263	263	263	263	263	263
TKN	35	35	35	35	35	35	35	48	48	48	48	48	48	48
TP	8.3	8.3	8.3	8.3	8.3	8.3	8.3	11.4	11.4	11.4	11.4	11.4	11.4	11.4
Alkalinity	2.92	2.92	2.92	2.92	2.92	2.92	2.92	4	4	4	4	4	4	4
pH	7	7	7	7	7	7	7	7	7	7	7	7	7	7
Primary Clarifier														
Area, ft^2	1,020	1,020	1,020	1,020	1,020	1,020	1,020	1,020	1,020	1,020	1,020	1,020	1,020	1,020
Surface Overflow Rate, gal/ft^2	676	676	676	676	676	676	676	490	490	490	490	490	490	490
Aerobic Tank														
Tank Volume, MG	0.2	0.2	0.2	0.2	0.2	0.2	0.2	0.2	0.2	0.2	0.2	0.2	0.2	0.2
HRT, hrs	7.0	7.0	7.0	7.0	7.0	7.0	7.0	9.6	9.6	9.6	9.6	9.6	9.6	9.6
MLSS Conc., mg/L	2,185	3,280	3,239	2,489	2,542	3,758	3,558	2,235	3,388	3,334	2,608	2,575	4,014	3,553
DO Concentration, mg/L	1	2	2, 0.5, 2	1	1	2	2, 0.5, 2	1	2, 0.5	2, 0.5, 2	1	1	2, 0.5	2, 0.5, 2
Air Supply Rate, ft^3/min	514	710	697	624	562	700	720	528	715	677	588	558	720	691
BioWin SRT, days	5.24	13.95	15.24	5.24	5.24	13.95	14.49	5.24	13.96	15	5.25	5.24	13.78	14.31
RAS Recyle Rate	0.5Q	0.5Q	0.5Q	0.5Q	0.5Q	0.5Q	0.5Q	0.5Q	0.5Q	0.5Q	0.5Q	0.5Q	0.5Q	0.5Q
Pre - Anoxic Tank														
Tank Volume, MG		0.1	0.1			0.1	0.1		0.1	0.1			0.1	0.1
HRT, hrs		3.5	3.5			3.5	3.5		4.8	4.8			4.8	4.8
Internal Recycle Rate		5Q	5Q			5Q	5Q		5Q	5Q			5Q	5Q
Post - Anoxic Tank														
Tank Volume, MG			0.05				0.05			0.05				0.05
HRT, hrs			1.7				1.7			2.4				2.4
Clarifier														
Area, ft^2	1,450	1,450	1,450	1,450	1,450	1,450	1,450	1,450	1,450	1,450	1,450	1,450	1,450	1,450
Surface Overflow Rate, gal/ft^2	476	476	476	476	476	476	476	345	345	345	345	345	345	345

TABLE 5-21

CONVENTIONAL ACTIVATED SLUDGE PLANT BIOWIN RESULTS FOR SEASONAL NUTRIENT REMOVAL

	PROCESS DESIGN - MMDW FLOWS							DRY SEASON - ADW FLOWS						
	Existing CAS Plant	Upgraded Plant						Existing CAS Plant	Upgraded Plant					
Description		Obj. A	Obj. B	Obj. C	Obj. D	Obj. E	Obj. F		Obj. A	Obj. B	Obj. C	Obj. D	Obj. E	Obj. F
Tertiary Filters														
Filter Area (ft^2)					380		380					380		380
Chemical Addition														
Methanol, gpd			15				15			10				10
Alum Dosage, gpd				95	160	100	175				130	160	130	175
Magnesium Hydroxide Dosage, gpd				120	120	80	120				90	100	80	100
Magnesium Hydroxide Conc., meq/L											14500	14500	14,500	14,500
Anaerobic Digester														
TSS wasted from Aerobic Tank, ppd	695	557	600	792	809	638	682	712	575	617	831	821	691	690
TSS loading to Digester, ppd	1,825	1,683	1,729	2,090	2,200	1,941	2,073	1,837	1,699	1,741	2,160	2,190	2,019	2,061
VS loading to Digester, ppd								1,255	1,111	1,134	1,259	1,269	1,134	1,123
Volume, MG	0.15	0.15	0.15	0.15	0.15	0.15	0.15	0.15	0.15	0.15	0.15	0.15	0.15	0.15
Hydraulic Residence Time, days	28.5	28.7	28.7	28.5	28.5	28.7	27.3	39.1	39.5	39.5	39.1	37.3	39.3	37.5
Sludge Production														
Sludge Production, ppd	934	912	927	1,156	1,278	1,141	1,264	913	899	910	1,186	1,243	1,171	1,234
Effluent														
BOD, mg/L	4.61	3.26	3.16	4.38	2.34	3.12	1.58	3.61	2.44	2.32	3.4	2.1	2.23	1.28
TSS, mg/L	8	8.5	8.5	0.2	1.8	8.8	5.3	5.5	5.8	5.8	5.6	1.2	5.9	6.0
Total Phosphorous, mg/L	6.29	6.43	6.09	0.32	0.05	0.28	0.06	8.75	8.39	8.47	0.25	0.04	0.45	0.05
Ammonia N, mg/L	8.95	0.58	0.21	2.02	3.93	0.67	0.27	11.08	0.42	0.14	4.84	6.84	0.36	0.22
TIN, mg/L	23.66	5.31	1.93	23.29	22.92	5.06	2.08	32.89	7.24	1.99	32.87	32.52	7.34	2.38
pH	6.23	6.29	6.38	6.61	6.57	6.67	6.52	6.27	6.38	6.52	6.42	6.48	6.64	6.52
Recycle Loads														
Nitrogen Recycle from Thickener, ppd	9.04	5.72	5.88	8.31	8.56	5.73	5.88	9.49	5.87	5.99	8.79	9	5.92	5.88
Nitrogen Recycle from Digester, ppd	35	27	28	33.5	31	24	26	34.41	27.5	28	34.6	33	27	24.29
Total Nitrogen Recycled, ppd	44.04	32.72	33.88	41.81	39.56	29.73	31.88	43.9	33.37	33.99	43.39	42	32.92	30.17
Total Phosphorus Recycle from Thickener, ppd	3.18	2.17	4.1	4.88	3.31	3.52	3.27	3.54	2.35	4.4	5.12	3.26	4.4	3.36
Total Phosphorus Recycle from Digester, ppd	15	12	21	21	8.38	13.8	8.37	15.82	15.5	22.6	21.9	8.07	18.66	8.36
Total Phosphorus Recycled, ppd	18.18	14.17	25.1	25.88	11.69	17.32	11.64	19.36	17.85	27	27.02	11.33	23.06	11.72
% TN Recycled	22.0%	16.4%	16.9%	20.9%	19.8%	14.9%	15.9%	22.0%	16.7%	17.0%	21.7%	21.0%	16.5%	15.1%
% TP Recycled	38.2%	29.8%	52.8%	54.4%	24.6%	36.4%	24.5%	40.7%	37.5%	56.8%	56.8%	23.8%	48.5%	24.6%

CHAPTER 6.
TECHNOLOGICAL EVALUATION
FOR SEQUENCING BATCH REACTOR PLANTS

6.1 BASE CASE/EXISTING SYSTEM

A base case model was developed in Biowin representing a sequencing batch reactor (SBR) plant with capacity for an MMWWF of 1.0 mgd. Unlike a typical extended aeration plant, where screened wastewater is aerated in a reactor sized for large retention time, followed by settlement of the biomass in a separate tank (final clarifier), in the SBR system, filling, reacting and settling of the biomass all take place in the same reactor tank, over sequential time periods.

It is assumed that the existing SBR system performs BOD removal and nitrification. Each of two SBR tanks operates on an 8-hour cycle, with 75 percent of the time for fill and react modes, 18.75 percent for settling, and 6 percent for decanting. The cycles of the two SBR tanks are offset 4 hours from one another. Only the liquid treatment process of the SBR was modeled; recycle flows and loads were assumed to be the same as those calculated for the extended aeration plant models.

Figure 6-1 represents the process flow schematic for the modeled existing SBR system. Table 6-1 summarizes the design data. SBR plants, in general are effective in removing nitrogen and biological phosphorus without the addition of chemicals. Biowin modeling of the base case SBR plant predicted an effluent TP concentration of less than 1.0 mg/L and a total inorganic nitrogen concentration of less than 10 mg/L. However, to be conservative, effluent TP from the existing plant was assumed to be 2 mg/L for the evaluation of process alternatives to achieve nutrient removal objectives.

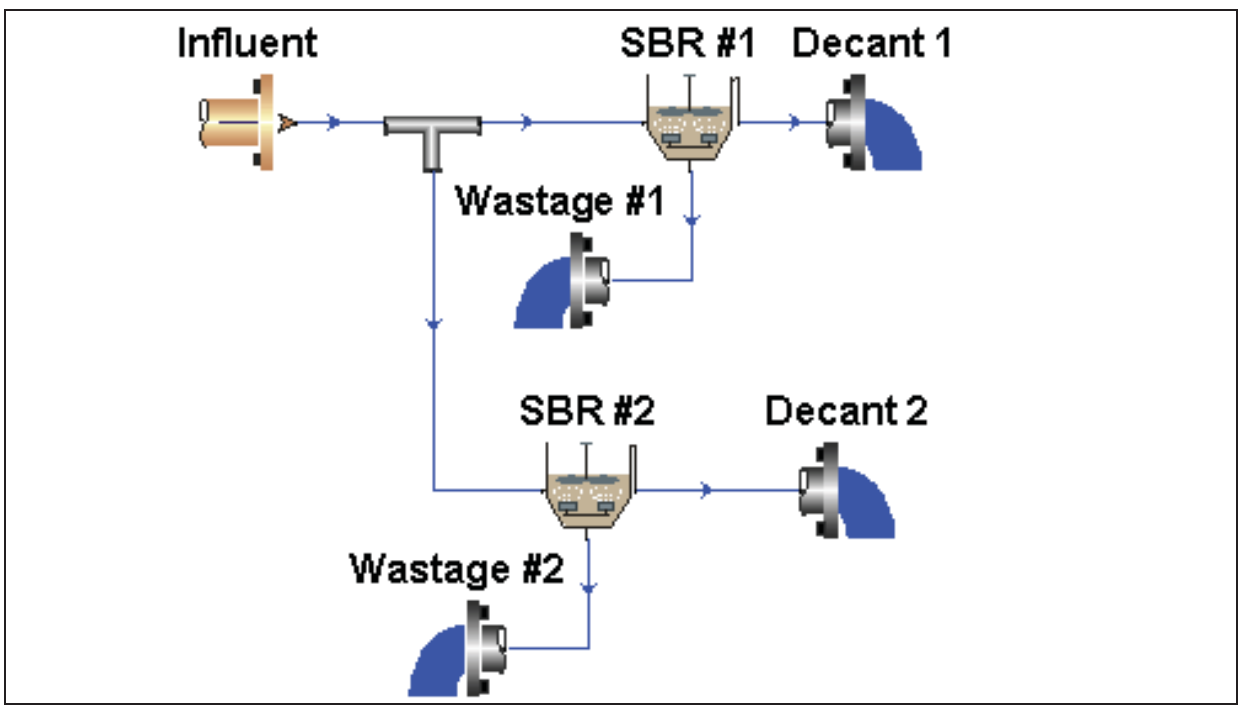

Figure 6-1. Process Flow Schematic of Sequencing Batch Reactor Treatment Plant

TABLE 6-1. BASE CASE/EXISTING SYSTEM FOR SEQUENCING BATCH REACTOR PLANT	
Influent + Recycle Flow	1.021 mgd
Temperature	10ºC
SBR Tank	
No of Tanks	2
Each Tank Volume	0.50 MG
HRT	23.5 hours
MLSS Concentration	3,000 mg/L
DO Concentration	2 mg/L
Air Supply Rate	720 cfm
Cycle Time	8 hours
SRT	16 days
Chemical Addition	
Magnesium Hydroxide Dosage	40 gpd
Effluent	
BOD	4.5 mg/L
TSS	16.0 mg/L
Phosphorous	2 mg/L
Ammonia N	5.2 mg/L
TIN	9.4 mg/L
pH	6.4

6.2 YEAR-ROUND NUTRIENT REMOVAL

Improvements required to provide year-round nutrient removal to achieve each treatment objective are described below. Process design data for all objectives are included in Table 6-2, which is attached at the end of this chapter.

6.2.1 Objective A

Process Description

Total inorganic nitrogen (TIN) effluent concentration as modeled for the existing system is 9.4 mg/L. TIN could be reduced to the Objective A target of 8 mg/L by increasing the volume of each existing SBR tank from 0.5 MG each to 0.65 MG. It was assumed that required additional volume would be provided by enlarging the footprint the existing tanks; at some facilities, the additional volume might be achievable by raising the walls of the existing tank or a combination of increasing the footprint and raising the tank walls. At some facilities, it might be appropriate to provide increased volume by constructing an additional SBR tank. Magnesium hydroxide would need to be applied to maintain the pH of the system at or above 6.5 and to balance the alkalinity.

Recycled Loads

The TN and TP recycle loads for SBR plants are same as for extended aeration plants. Refer to the extended aeration recycled loads discussions in Chapter 4 for a detailed description.

Sludge Production

Since the solids treatment process was not included in the SBR model, extended aeration model solids treatment removal rates were used to estimate the daily sludge production values. Based on the amount of sludge wasted per day and using the removal efficiencies from the extended aeration model, the annual average quantity of sludge produced by the complete existing SBR plant is 1,118 ppd dry solids; this is equivalent to 0.89 tons of dry solids per million gallons of wastewater treated on an annual basis. The modeled upgraded SBR plant to achieve Objective A would 1,074 ppd dry solids, which is equivalent to 0.86 tons of dry solids per million gallons of wastewater treated. Therefore, upgrading SBR plant to achieve Objective A would result in a 4-percent reduction in annual quantity of sludge produced by the plant. This is equivalent to a reduction in sludge production of approximately 71 pounds (0.036 tons) per million gallons of wastewater treated.

Energy Consumption

Upgrading the 1-mgd model SBR plant secondary treatment process to achieve Objective A year-round would increase the total plant energy requirements by 11,000 kW-hours/year, or about 1 percent, as shown in Table 6-3. There would be a slight decrease in the energy requirements for solids processes as a result of the reduced volatile solids loading on the aerobic digester. The annual energy consumption for the upgraded plant would increase by about 48 kW-hours per million gallons of influent wastewater treated.

TABLE 6-3.
ADDITIONAL ENERGY CONSUMPTION FOR UPGRADING SBR PLANT TO ACHIEVE OBJECTIVE A YEAR-ROUND

Yearly Energy Required	
Existing SBR Plant	1,014,000 kW-hours/year
Objective A Year-Round	1,025,000 kW-hours/year
Energy Increase for Upgrade	
Annual Quantity	11,000 kW-hours/year
Percent	1%
Increase per Volume of Plant Flow	48 kW-hours/MG

Chemical Usage

The model predicts that both the existing and the upgraded SBR plants would need supplemental addition of alkalinity to sustain the nitrification process and to maintain the pH of the secondary effluent above 6.5. Upgrade of the existing SBR plant to achieve Objective A would reduce the quantity of supplemental alkalinity addition by 7.6 percent on an annual flow basis. The existing SBR plant would require approximately 52 gallons of magnesium hydroxide per million gallons treated on an annual basis and the upgraded SBR plant would require only 48 gallons per million gallons of wastewater treated.

Footprint Requirements

Increasing the volume of the SBR tanks to achieve Objective A would require additional site area, as indicated in Table 6-4.

TABLE 6-4.
ADDITIONAL FOOTPRINT REQUIRED FOR UPGRADING SBR PLANTS TO ACHIEVE OBJECTIVE A YEAR-ROUND

Plant Design Capacity (mgd)	Additional Area Required for Upgrade (square feet)
0.5	1,500
1.0	3,000
2.0	6,000
10	30,000

6.2.2 Objective B

Process Description

The upgrade evaluated for an SBR plant to achieve Objective B (TIN <3 mg/L) includes increasing SBR tank volume as identified for Objective A, installing denitrification filters, and providing a methanol feed and storage tank system for a carbon source to drive the denitrification process. If the existing plant does not have an equalization basin, then a new equalization tank is needed to maintain a relatively constant flow to the denitrification filters. Biowin does not have an option to size and model denitrification filters, so they were sized separately. Table 6-2 summarizes the process design data.

Denitrification filters are used as a polishing treatment process for nitrogen removal. The denitrification filters remove nitrate-nitrogen by the biologically mediated process that converts the nitrate-nitrogen to nitrogen gas and concurrently removes suspended solids from the secondary effluent stream. Two types of denitrification filters are available:

- Downflow continuous backwash filters—Downflow denitrification filters operate in a conventional filtration mode and consist of media and support gravel supported by an underdrain. Denitrification takes place through the filter system due to limited or anoxic conditions, and the nitrate-nitrogen is converted to nitrogen gas, which is embedded in the filter media and removed through nitrogen-release cycles. The piping for the filter influent and backwash is similar to that of conventional filters. Backwash is required at regular intervals.
- Upflow filters—In an upflow filter, wastewater moves up through the filter media and filtrate is discharged from the upper portion.

Downflow denitrification filters were assumed for the Objective B upgrade, with two duty filters at an application rate of 3 gallons per minute per square foot (gpm/ft^2). The filters were sized for 115 percent capacity, which included a 5-percent capacity allowance for backwashing. The filters were sized as follows:

- MMWWF = 1 mgd (694.4 gpm)
- Design the filter at 110% of MMWWF capacity
- Provide 5% allowance for backwashing
- Design capacity + Backwash = 798.6 gpm
- Filter Application Rate = 3 gpm/ft^2
- Required Filter Area = 266.2 square feet

- Area of each Filter = 133.1 square feet

The head loss of the system increases as the nitrogen gas accumulates in the filter media. This requires periodic release of the nitrogen gas during backwashes. This can be achieved by removing a reactor from service and applying backwash water for a short period of time. Therefore, three filters are needed, in order to provide continuous filtration. The total filter area with three filters—two operating and one for backwash—would be 400 square feet.

The equalization tank would need to be sized to store one SBR decant volume during peak flow. The total number of cycles in a day for each SBR tank is three (each cycle is eight hours). With two SBR tanks, the plant performs a total of six cycles per day. Thus, for a peak flow of 1.72 mgd, the required volume of the equalization tank is 1.72 mgd ÷ 6 cycles per day, or approximately 0.3 MG.

Methanol feed and storage tanks systems would be sized as described in Chapter 4 for upgrading the extended aeration systems.

Recycled Loads

The TN and TP recycle loads for SBR plants would be the same as presented for upgraded extended aeration plants meeting this objective. Refer to the Chapter 4 extended aeration Objective B recycle loads discussion.

Sludge Production

Since the Objective B SBR system was not modeled using Biowin, it was assumed that the difference in sludge produced compared to an existing SBR would be similar to the difference between the Objective B extended aeration system (951 ppd) and the existing extended aeration system (949 ppd). This 2-ppd difference was added to the existing SBR average daily sludge value (1,118 ppd) to yield an average sludge production rate for Objective B SBRs of 1,120 ppd. The average sludge production increase associated with achieving Objective B would be negligible at less than 0.2 percent. The increased sludge production associated with upgrading the existing plant to achieve Objective B would be equivalent to approximately 1.8 pounds per million gallons of wastewater treated on an annual basis.

Energy Consumption

The upgraded plant to achieve Objective B will consume approximately 16 percent more energy than the existing SBR plant, as shown in Table 6-5. This increase in energy consumption is mostly attributable to the operation of the denitrification filters and the chemical feed systems. Energy requirements associated with the solids handling and dewatering processes would be approximately the same as for the existing plant.

Chemical Usage

The Objective B upgrade would require the same amount of alkalinity supplementation as the Objective A upgrade. It would reduce the annual quantity of alkalinity addition 7.6 percent, from about 52 gallons of magnesium hydroxide per million gallons treated for the existing plant to 48 gallons per million gallons treated for the upgraded plant. The methanol requirement for carbon supplementation to achieve Objective B year-round would be approximately 3,700 gallons of methanol per year, or 16 gallons per million gallons of wastewater treated.

TABLE 6-5.
ADDITIONAL ENERGY CONSUMPTION FOR UPGRADING SBR PLANT TO ACHIEVE OBJECTIVE B YEAR-ROUND

Yearly Energy Required	
Existing SBR Plant	1,014,000 kW-hours/year
Objective A Year-Round	1,178,000 kW-hours/year
Energy Increase for Upgrade	
Annual Quantity	164,000 kW-hours/year
Percent	16%
Increase per Volume of Plant Flow	719 kW-hours/MG

Footprint Requirements

The additional process footprint area required to achieve Objective B would include the expansion of the SBR tanks as described for Objective A plus the area required for a secondary flow equalization tank, denitrification filters and methanol storage tanks and feed system. The footprint for the denitrification filters includes the filter column area, the area of internal recycle pumping, and the area of wash water pumping. Table 6-6 presents the additional footprint area required to upgrade the existing SBR plants to achieve Objective B year round for the four generic plant capacities.

TABLE 6-6.
ADDITIONAL FOOTPRINT REQUIRED FOR UPGRADING SBR PLANTS TO ACHIEVE OBJECTIVE B YEAR-ROUND

	Additional Area Required for Upgrade (square feet)				
Plant Design Capacity (mgd)	SBR Tank Expansion	Denitrification Filters	Methanol Storage & Feed	Equalization Basin	**Total**
0.5	1,500	1,200	400	1,500	**4,600**
1.0	3,000	2,400	600	3,000	**9,000**
2.0	6,000	4,000	800	6,000	**16,800**
10	30,000	9,000	1,000	16,000	**56,000**

6.2.3 Objective C

Process Description

The upgrade evaluated to achieve Objective C (TP <1 mg/L) includes adding alum for chemical precipitation of orthophosphate and magnesium hydroxide for pH control. The quantity of alum required to reduce TP to less than 1.0 mg/L from the assumed existing effluent concentration of 2.0 mg/L was calculated stochiometrically; no Biowin model was generated. Magnesium hydroxide dose was determined based on the alum-to-magnesium-hydroxide ratio applied to the extended aeration system Objective C upgrade presented in Chapter 4. For year-round nutrient removal, alum and magnesium hydroxide storage tanks were sized for maximum chemical consumption during MMWWF, AWWF or ADWF. Table 6-2 presents the alum and magnesium hydroxide dosage rates for the 1-mgd SBR plant.

Recycled Loads

The TN and TP recycle loads for SBR plants would be the same as for extended aeration plants. See the extended aeration recycled loads for Objective C discussions in Chapter 4 for a detailed description.

Sludge Production

Sludge production rates for the upgraded SBR plant achieving Objective C were extrapolated from the Biowin results for upgraded extended aeration plants. It was assumed that the difference in sludge produced compared to an existing SBR will be similar to the difference between the Objective C extended aeration system (1,201 ppd) and the existing extended aeration system (949 ppd). This 252-ppd difference was correlated to an average alum dose of 118 gpd, which equates to 2.14 pounds of additional dry sludge solids per gallon of alum applied. The SBR plant was determined to require only 21 percent of the alum dose needed for the extended aeration system. Thus the increase in sludge production for the 1-mgd SBR plant would be 53 ppd, or 4.7 percent. This represents 0.04 tons of dry solids per million gallons of wastewater treated.

Energy Consumption

There would be very little increase (less than 1 percent) in energy consumption for the upgraded SBR plant to achieve Objective C. As shown in Table 6-7, the incremental increase in the consumption of energy would be equivalent to 18 kW-hours per million gallons of wastewater treated.

TABLE 6-7.
ADDITIONAL ENERGY CONSUMPTION FOR UPGRADING SBR PLANT TO ACHIEVE OBJECTIVE C YEAR-ROUND

Yearly Energy Required	
Existing SBR Plant	1,014,000 kW-hours/year
Objective C Year-Round	1,018,000 kW-hours/year
Energy Increase for Upgrade	
Annual Quantity	4,000 kW-hours/year
Percent	<1%
Increase per Volume of Plant Flow	18 kW-hours/MG

Chemical Usage

To meet Objective C would not require more alkalinity supplementation than required by the existing plant. Based on an existing final effluent total phosphorus concentration of 2 mg/L, the average annual alum usage would be approximately 40 gallons per million gallons of wastewater treated to achieve Objective C.

Footprint Requirements

Table 6-8 compares the secondary footprint area for existing SBR plants to the area required to achieve Objective C for the four plant capacities. The additional footprint area is required for alum storage and feed systems.

TABLE 6-8.
ADDITIONAL FOOTPRINT REQUIRED FOR UPGRADING SBR PLANTS TO ACHIEVE OBJECTIVE C YEAR-ROUND

Plant Design Capacity (mgd)	Additional Area Required for Upgrade (square feet)
0.5	300
1.0	500
2.0	1,000
10	2,000

6.2.4 Objective D

Process Description

The upgrade evaluated to achieve Objective D (TP <0.1 mg/L) is to provide chemical precipitation using alum and magnesium hydroxide and to add final effluent flow equalization and tertiary filters to the existing SBR system. It is assumed that the phosphorus in the final effluent produced by the existing treatment plant is 2 mg/L.

Alum required to reduce TP from 2.0 mg/L to 0.1 mg/L was calculated stochiometrically as described in Chapter 4; no Biowin model was generated. Magnesium hydroxide dosage was determined based on extrapolation of the alum-to-magnesium-hydroxide ratio described in Objective C. For year-round nutrient removal, alum and magnesium hydroxide storage tanks were sized for maximum chemical consumption during MMWWF, AWWF or ADWF. Refer to Table 6-2 for alum and magnesium hydroxide dosage rates.

Recycled Loads

The TN and TP recycle loads for SBR plants would be the same as for extended aeration plants. See the extended aeration recycled loads for Objective D discussions in Chapter 4 for a detailed description.

Sludge Production

The methodology for determining the effect on sludge production of upgrading the existing SBR plant to achieve Objective D was similar to that described for Objective C. It was assumed that the difference in sludge produced by an upgraded SBR plant to achieve Objective D would be similar to an extended aeration plant achieving the same objective. The incremental increase in sludge production associated with upgrading an extended aeration plant to achieve Objective D year-round was determined to be approximately 1.9 pounds of additional sludge per gallon of alum applied. The 1-mgd SBR plant upgraded to achieve Objective D would require 24,445 gallons of alum, so the additional sludge produced would be 23.1 tons of dry solids per year. This corresponds to an annual sludge production increase of 202 pounds (0.10 tons) of additional dry solids per million gallons of influent wastewater treated, an increase of 18 percent.

Energy Consumption

As shown in Table 6-9, there would be a small increase in energy consumption to achieve Objective D for an SBR plant, principally due to operation of the filters.

TABLE 6-9.
ADDITIONAL ENERGY CONSUMPTION FOR UPGRADING SBR PLANT TO ACHIEVE OBJECTIVE D YEAR-ROUND

Yearly Energy Required	
Existing SBR Plant	1,014,000 kW-hours/year
Objective D Year-Round	1,038,000 kW-hours/year
Energy Increase for Upgrade	
Annual Quantity	24,000 kW-hours/year
Percent	2%
Increase per Volume of Plant Flow	105 kW-hours/MG

Chemical Usage

The average annual alum usage to meet Objective D year-round would be 107 gallons per million gallons of wastewater treated. Additional alkalinity supplementation would be required to compensate for the alum dose; the magnesium hydroxide usage would increase 13,700 gallons per year for the 1-mgd model plant, or an additional 60 gallons of magnesium hydroxide per million gallons of wastewater treated.

Footprint Requirements

The footprint expansion required for the year-round Objective D upgrade would be for the tertiary filters, the equalization storage, and the chemical storage tanks. Table 6-10 presents the increased footprint area required for the four generic plant capacities.

TABLE 6-10.
ADDITIONAL FOOTPRINT REQUIRED FOR UPGRADING SBR PLANTS TO ACHIEVE OBJECTIVE D YEAR-ROUND

Plant Design Capacity (mgd)	Additional Area Required for Upgrade (square feet)			
	Alum Storage and Feed Systems	Equalization Basin	Filters	**Total**
0.5	300	1,500	420	**2,220**
1.0	520	3,000	830	**4,350**
2.0	1,000	6,000	1,660	**8,660**
10	2,500	16,000	8,300	**26,800**

6.2.5 Objective E

Process Description

Existing SBR plants can be upgraded to achieve Objective E (TIN <8 mg/L and TP <1 mg/L) by completing the upgrades described for both Objective A and Objective C. For the 1-mgd plant, the upgrade would be to increase the capacity of the two existing SBR tanks from 0.5 MG to 0.65 MG and to construct chemical feed and storage tank systems. Dosages rates for alum and magnesium hydroxide would be the same as presented in Table 6-2 for Objective B.

Recycled Loads

The TN and TP recycle loads for SBR plants were assumed to be the same as for extended aeration plants. See the extended aeration recycled loads discussions in Chapter 4 for a detailed description.

Sludge Production

Sludge production rates for the upgraded SBR plant achieving Objective E were extrapolated from Biowin modeled results for upgraded extended aeration plants. It was assumed that the difference in sludge produced compared to an existing SBR will be similar to the sludge production difference between the extended aeration plant upgraded to achieve Objective E (1,201 ppd) and the existing extended aeration system (949 ppd). This 366-ppd of additional sludge per million gallons of wastewater treated is correlated to an average alum dose of 118 gpd, which equates to 1.9 pounds of additional dry sludge solids per gallon of alum applied. The SBR plant upgrade was determined to require only 33.8 percent of the alum dose needed to upgrade the extended aeration system for Objective E. The increased sludge production for a 1-mgd SBR plant would be only 76 ppd, or 6.7 percent. This represents an increase of 0.06 tons of dry solids per million gallons of wastewater treated.

Energy Consumption

As shown in Table 6-11, there would be a slight increase (<1%) in energy consumption for the plant upgraded to achieve Objective E. Although there would be more sludge generated by the upgraded plant, there would be slightly less energy required for the solids handling process due to the longer sludge age maintained in the SBR process.

TABLE 6-11.
ADDITIONAL ENERGY CONSUMPTION FOR UPGRADING SBR PLANT TO ACHIEVE OBJECTIVE E YEAR-ROUND

Yearly Energy Required	
Existing SBR Plant	1,014,000 kW-hours/year
Objective E Year-Round	1,017,000 kW-hours/year
Energy Increase for Upgrade	
Annual Quantity	3,000 kW-hours/year
Percent	<1%
Increase per Volume of Plant Flow	13 kW-hours/MG

Chemical Usage

To meet Objective E, the upgraded SBR plant would not require more alkalinity supplementation than required by the existing plant. The average annual alum usage to achieve Objective E would be approximately 40 gallons per million gallons of wastewater treated.

Footprint Requirements

The increased footprint requirements for upgrading the existing SBR plant to achieve Objective E would be for expansion of the SBR tankage as described for Objective A and for chemical storage and feeding systems as described for Objective C. Table 6-12 summarizes the footprint area requirement for the four generic plant capacities.

TABLE 6-12.
ADDITIONAL FOOTPRINT REQUIRED FOR UPGRADING SBR PLANTS TO ACHIEVE OBJECTIVE E YEAR-ROUND

Plant Design Capacity (mgd)	Additional Area Required for Upgrade (square feet)		
	SBR Tank Expansion	Alum Storage and Feed Systems	**Total**
0.5	1,500	300	**1,800**
1.0	3,000	520	**3,520**
2.0	6,000	1,000	**7,000**
10	30,000	2,500	**32,500**

6.2.6 Objective F

Process Description

Objective F (TIN <3 mg/L and TP <0.1 mg/L) can be achieved by simultaneously completing the upgrades described for both Objective B and Objective D:

- Increase the volume of SBR tanks approximately 18 percent.
- Install denitrification filters.
- Add methanol as a supplemental carbon source.
- Add a flow equalization basin for secondary effluent decants from the SBR reactors to provide a relatively uniform rate of flow to the filters and to minimize the size and cost of the filtration facilities.
- Provide chemical precipitation using alum and expand alkalinity control using magnesium hydroxide.

Recycled Loads

The TN and TP recycle loads for SBR plants are same as for extended aeration plants. See the extended aeration recycled loads discussions in Chapter 4 for a detailed description.

Sludge Production

Following the procedure outlined for the other objectives, upgrading the existing SBR plant to achieve Objective F would increase the annual sludge production approximately 17 percent on an annual basis, compared to the existing plant. This is equivalent to an annual increase of 190 pounds (0.095 tons) of sludge per million gallons wastewater treated. The increase would be primarily a consequence of precipitating phosphorus with alum.

Energy Consumption

Based on extended aeration total phosphorus removal results, 17 percent more energy would be required for the upgraded SBR plant to achieve Objective F than for the existing plant, as shown in Table 6-13. Although there would be more sludge generated by the upgraded plant, there would be slightly less energy required for solids handling due to the longer sludge age maintained in the SBR process.

TABLE 6-13.
ADDITIONAL ENERGY CONSUMPTION FOR UPGRADING SBR PLANT TO ACHIEVE OBJECTIVE F YEAR-ROUND

Yearly Energy Required	
Existing SBR Plant	1,014,000 kW-hours/year
Objective F Year-Round	1,190,000 kW-hours/year
Energy Increase for Upgrade	
Annual Quantity	176,000 kW-hours/year
Percent	17%
Increase per Volume of Plant Flow	772 kW-hours/MG

Chemical Usage

The average annual alum usage for the upgraded SBR plant to meet Objective F would be 106.4 gallons per million gallons of wastewater treated. Magnesium hydroxide dosage would increase 39 percent, an incremental increase equivalent to 20 gallons per million gallons of wastewater treated.

Footprint Requirements

The increased process footprint requirements for upgrading the existing SBR plant to achieve Objective F would include: expansion of the SBR tankage and addition of denitrification filters and methanol storage and feedings system as described for Objective B; and addition of alum storage and feeding and tertiary filtration system as described for Objective D. For the purposes of this analysis, it was assumed that the tertiary filtration and denitrification filters would be a combined filtration system. Table 6-14 summarizes the footprint area requirement for the four generic plant capacities.

TABLE 6-14.
ADDITIONAL PROCESS FOOTPRINT AREA REQUIRED FOR UPGRADING SBR PLANTS TO ACHIEVE OBJECTIVE F YEAR-ROUND

	Additional Area Required for Upgrade (square feet)					
Plant Design Capacity (mgd)	SBR Tank Expansion	Methanol Storage & Feed	Alum Storage and Feed Systems	Equalization Basin	Filters	**Total**
0.5	1,500	400	300	1,500	420	**4,120**
1.0	3,000	600	520	3,000	830	**7,950**
2.0	6,000	800	1,000	6,000	1,660	**15,460**
10	30,000	1,000	2,500	16,000	8,300	**57,800**

6.3 SEASONAL NUTRIENT REMOVAL

Improvements required to provide seasonal nutrient removal to achieve each treatment objective are described below. Process design data for all objectives are included in Table 6-15, which is attached at the end of this chapter.

6.3.1 Objective A

Process Description

The Objective A (TIN <8 mg/L) treatment process upgrades for seasonal nutrient removal would be the same as for year-round nutrient removal (the capacity of the existing aeration tanks would need to be increased) except that the capital facilities would be designed based on MMDWF instead of MMWWF and O&M costs would be based on ADWF instead of AWWF. Refer to Section 6.2.1 for detailed process description. Process design data are included in Table 6-15.

Recycled Loads

The TN and TP recycle loads for SBR plants are same as for extended aeration plants. See the extended aeration recycled loads discussions in Chapter 4 for a detailed description.

Sludge Production

Sludge production would decrease approximately 4 percent during dry season with the operation of the Objective A upgraded plant. On an average annual basis, seasonal operation of the upgraded SBR plant to achieve Objective A would decrease sludge production about 2 percent, or 0.0175 tons of dry solids per million gallons of influent wastewater treated.

Energy Consumption

Upgrading the SBR plant secondary treatment process to achieve Objective A for dry-season nutrient removal would increase the total plant energy requirements by 5,000 kW-hours/year, or <1 percent, as shown in Table 6-16. There would be a slight decrease in the energy requirement for solids processes as a result of the reduced volatile solids loading. The annual energy consumption for the upgraded plant would increase by about 22 kW-hours per million gallons of influent wastewater treated.

TABLE 6-16.
ADDITIONAL ENERGY CONSUMPTION FOR UPGRADING SBR PLANT TO ACHIEVE OBJECTIVE A SEASONALLY

Yearly Energy Required	
Existing SBR Plant	1,014,000 kW-hours/year
Objective A Dry Season	1,019,000 kW-hours/year
Energy Increase for Upgrade	
Annual Quantity	5,000 kW-hours/year
Percent	<1%
Increase per Volume of Plant Flow	22 kW-hours/MG

Chemical Usage

The model predicts that the both the existing and the upgraded SBR plants would need supplemental addition of alkalinity to sustain the nitrification process and to maintain the pH of the secondary effluent above 6.5. Upgrade of the existing SBR plant to achieve Objective A seasonally would increase the annual quantity of supplemental alkalinity addition by 7.6 percent—an additional 4 gallons of magnesium hydroxide per million gallons treated per year.

Footprint Requirements

Process footprint requirements associated with upgrading an existing SBR plant to achieve Objective A seasonally would be the same as presented for year-round nutrient removal in Section 6.2.1. Refer to Table 6-4.

6.3.2 Objective B

Process Description

The Objective B (TIN <3 mg/L) treatment processes for seasonal nutrient removal would be the same as for year-round nutrient removal except that the capital facilities would be designed based on MMDWF instead of MMWWF and O&M costs will be based on ADWF instead of AWWF. Refer to Section 6.2.2 for detailed process description. Process design data are included in Table 6-15.

Recycled Loads

The TN and TP recycle loads for SBR plants are same as for extended aeration plants. See the extended aeration recycled loads discussions in Chapter 4 for a detailed description.

Sludge Production

The sludge production would increase slightly as a result of seasonal implementation of Objective B—about 0.1 percent on an annual basis, or 0.9 pounds per million gallons of influent wastewater treated. This would be an annual increase of only 205 pounds of dry solids for an upgraded 1-mgd SBR plant.

Energy Consumption

Upgrading the SBR plant secondary treatment process to achieve Objective B for dry-season nutrient removal would increase the total plant energy requirements by 67,000 kW-hours/year, or about 7 percent, as shown in Table 6-17. There would be slight decrease in the energy requirements for solids processes as a result of the reduced volatile solids loading on the aerobic digester. The annual energy consumption for the upgraded plant would increase by about 294 kW-hours per million gallons of influent wastewater treated.

TABLE 6-17.
ADDITIONAL ENERGY CONSUMPTION FOR UPGRADING SBR PLANT TO ACHIEVE OBJECTIVE B SEASONALLY

Yearly Energy Required	
Existing SBR Plant	1,014,000 kW-hours/year
Objective B Dry Season	1,081,000 kW-hours/year
Energy Increase for Upgrade	
Annual Quantity	67,000 kW-hours/year
Percent	7%
Increase per Volume of Plant Flow	294 kW-hours/MG

Chemical Usage

Upgrade of the existing SBR plant to achieve Objective B would reduce the quantity of supplemental alkalinity required by 15.4 percent on an annual flow basis. The upgraded plant would require an

additional 8 gallons of magnesium hydroxide per million gallons treated on an annual basis. It also would require the addition of methanol at a rate of approximately 8 gallons of methanol per million gallons of wastewater treated on an annual basis.

Footprint Requirements

Table 6-18 presents the additional footprint area required for upgrading existing SBR plants to achieve Objective B on a dry weather season basis for the four generic plant capacities.

TABLE 6-18.
ADDITIONAL FOOTPRINT REQUIRED FOR UPGRADING SBR PLANTS TO ACHIEVE OBJECTIVE B SEASONALLY

	Additional Area Required for Upgrade (square feet)				
Plant Design Capacity (mgd)	SBR Tank Expansion	Denitrification Filters	Methanol Storage & Feed	Equalization Basin	**Total**
0.5	1,500	800	400	1,000	3,800
1.0	3,000	1,700	600	2,000	7,300
2.0	6,000	2,800	800	4,200	13,800
10	30,000	6,300	1,000	11,200	48,500

6.3.3 Objective C

Process Description

The Objective C (TP <1 mg/L) treatment processes for seasonal nutrient removal would be the same as for year-round nutrient removal except that the capital facilities would be designed based on MMDWF instead of MMWWF.

Recycled Loads

The TN and TP recycle loads for SBR plants are assumed to be same as for extended aeration plants. See the extended aeration recycled loads discussions in Chapter 4 for a detailed description.

Sludge Production

Sludge production for the upgraded 1-mgd SBR plant to achieve Objective C seasonally would be 53 ppd greater than for the existing plant during the dry weather season, a 2.3-percent increase in the annual mass of sludge produced by the plant. The increase represents 42.4 pounds (0.02 tons) of dry solids per million gallons of influent wastewater treated on an annual basis.

Energy Consumption

Upgrading the SBR plant secondary treatment process to achieve Objective C for dry season nutrient removal would slightly reduce the total plant energy requirements as shown in Table 6-19.

TABLE 6-19. ADDITIONAL ENERGY CONSUMPTION FOR UPGRADING SBR PLANT TO ACHIEVE OBJECTIVE C SEASONALLY	
Yearly Energy Required	
Existing SBR Plant	1,014,000 kW-hours/year
Objective C Dry Season	1,009,000 kW-hours/year
Energy Increase for Upgrade	
Annual Quantity	(5000) kW-hours/year
Percent	<1%
Increase per Volume of Plant Flow	(22) kW-hours/MG

Chemical Usage

Upgrade of the existing SBR plant to achieve Objective C would require an additional 8 gallons of magnesium hydroxide per million gallons treated on an annual basis. The upgrade would require the addition of alum to remove phosphorus at an average rate of 66 gallons per million gallons of wastewater treated during seasonal dry weather, or 26.4 gallons per million gallons of wastewater treated on an annual basis.

Footprint Requirements

The site area requirements to accommodate the process upgrades to achieve Objective C on a seasonal basis would be the same as for the Objective C year-round upgrade.

6.3.4 Objective D

Process Description

The Objective D (TP <0.1 mg/L) treatment processes for seasonal nutrient removal would be the same as for year-round nutrient removal except that the capital facilities would be designed based on MMDWF instead of MMWWF and O&M costs will be based on ADWF instead of AWWF. Refer to Section 6.2.4 for detailed process description. Process design data are included in Table 6-15.

Recycled Loads

The TN and TP recycle loads for SBR plants are same as for extended aeration plants. See the extended aeration recycled loads discussions in Chapter 4 for a detailed description.

Sludge Production

Sludge production for the upgraded 1-mgd SBR plant to achieve Objective D on a seasonal dry weather basis would be approximately 126 ppd greater than for the existing plant during the dry weather season, a 5.6 percent increase in the annual mass of sludge produced. This represents 101 pounds (0.05 tons) of dry solids per million gallons of influent wastewater treated on an annual basis.

Energy Consumption

As shown in Table 6-20, there would be a small increase in energy consumption to achieve Objective D seasonally for an SBR plant, principally due to the operation of the filters.

TABLE 6-20.
ADDITIONAL ENERGY CONSUMPTION FOR UPGRADING SBR PLANT TO ACHIEVE OBJECTIVE D SEASONALLY

Yearly Energy Required	
Existing SBR Plant	1,014,000 kW-hours/year
Objective D Dry Season	1,024,000 kW-hours/year
Energy Increase for Upgrade	
Annual Quantity	10,000 kW-hours/year
Percent	1%
Increase per Volume of Plant Flow	44 kW-hours/MG

Chemical Usage

The average annual alum usage to achieve Objective D seasonally would be 26.8 gallons per million gallons of wastewater treated. The magnesium hydroxide usage would increase 3,650 gallons per year for the 1-mgd model plant, or an additional 16 gallons of magnesium hydroxide per million gallons of wastewater treated.

Footprint Requirements

The footprint expansion required for the seasonal Objective D upgrade would be for the tertiary filters, the equalization storage, and the chemical storage tanks. Table 6-21 presents the increased footprint area required for the four generic plant capacities.

TABLE 6-21.
ADDITIONAL FOOTPRINT REQUIRED FOR UPGRADING SBR PLANTS TO ACHIEVE OBJECTIVE D SEASONALLY

Plant Design Capacity (mgd)	Additional Area Required for Upgrade (square feet)			
	Alum Storage and Feed Systems	Equalization Basin	Filters	**Total**
0.5	300	1,100	320	**1,720**
1.0	520	2,250	630	**3,400**
2.0	1,000	4,500	1,250	**7,650**
10	2,500	12,000	6,300	**20,800**

6.3.5 Objective E

Process Description

The Objective E (TIN <8 mg/L and TP <1 mg/L) treatment processes for seasonal nutrient removal would be the same as for year-round nutrient removal except that the capital facilities would be designed based on MMDWF instead of MMWWF and O&M costs will be based on ADWF instead of AWWF. Refer to Section 6.2.5 for detailed process description. Process design data are included in Table 6-15.

Recycled Loads

The TN and TP recycle loads for SBR plants are same as for extended aeration plants. See the extended aeration recycled loads discussions in Chapter 4 for a detailed description.

Sludge Production

Sludge production for the 1-mgd SBR plant upgraded to achieve Objective E on a seasonal basis would be 76 ppd greater than for the existing plant, a 3.3 percent increase in the annual mass of sludge produced. This represents an increase of 61 pounds (0.03 tons) of dry solids per million gallons of influent wastewater treated on an annual basis.

Energy Consumption

As shown in Table 6-22 there would be a slight reduction (<1%) in the energy consumption by the upgraded plant to achieve Objective E on a seasonal dry weather basis. Although there would be more sludge generated by the upgraded plant, there would be slightly less energy required for the solids handling process due to the longer sludge age maintained in the SBR process.

TABLE 6-22.
ADDITIONAL ENERGY CONSUMPTION FOR UPGRADING SBR PLANT TO ACHIEVE OBJECTIVE E SEASONAL

Yearly Energy Required	
Existing SBR Plant	1,014,000 kW-hours/year
Objective E Dry Season	1,008,000 kW-hours/year
Energy Increase for Upgrade	
Annual Quantity	(6,000) kW-hours/year
Percent	<-1%
Increase per Volume of Plant Flow	(26) kW-hours/MG

Chemical Usage

The upgrade to achieve Objective E on a seasonal basis would require the addition of alum and magnesium hydroxide, and the usage rates would be equivalent to those required to achieve Objective C on a seasonal basis. Methanol would not be required.

Footprint Requirements

The increased footprint requirements associated with upgrading the existing SBR plant to achieve Objective E during seasonal dry weather would be for expansion of the SBR tankage as described for Objective A and for chemical storage and feeding systems as described for Objective C. Table 6-23 summarizes the footprint area requirement for upgrading existing SBR plant to achieve Objective E for the four generic plant capacities.

TABLE 6-23.
ADDITIONAL FOOTPRINT REQUIRED FOR UPGRADING SBR PLANTS TO ACHIEVE OBJECTIVE E SEASONALLY

Plant Design Capacity (mgd)	Additional Area Required for Upgrade (square feet)		
	SBR Tank Expansion	Alum Storage and Feed Systems	**Total**
0.5	1,500	300	**1,800**
1.0	3,000	520	**3,520**
2.0	6,000	1,000	**7,000**
10	30,000	2,500	**32,500**

6.3.6 Objective F

Process Description

The Objective F (TIN <3 mg/L and TP <0.1 mg/L) treatment processes for seasonal nutrient removal would be the same as for year-round nutrient removal except that the capital facilities would be designed based on MMDWF instead of MMWWF and O&M costs will be based on ADWF instead of AWWF. Refer to Section 6.2.6 for detailed process description. Process design data are included in Table 6-15.

Recycled Loads

The TN and TP recycle loads for SBR plants are same as for extended aeration plants. See the extended aeration recycled loads discussions in Chapter 4 for a detailed description.

Sludge Production

Sludge production for the 1-mgd SBR plant upgraded to achieve Objective F on a seasonal dry weather basis would be 119 ppd greater than for the existing plant, a 5.3-percent in the annual mass of sludge produced by the plant. This represents an increase of 95 pounds (0.048 tons) of dry solids per million gallons of influent wastewater treated on an annual basis.

Energy Consumption

Although there would be more sludge generated by the upgraded plant, there would be slightly less energy required for the solids handling process due to the longer sludge age maintained in the SBR. The effect of upgrading the existing SBR plant to achieve Objective F on a seasonal basis would increase the annual power requirements approximately 7 percent or 311 kW-hours per million gallons of influent wastewater treated on an annual basis, as shown in Table 6-24.

Chemical Usage

The average annual alum usage to achieve Objective F seasonally would be 134 gallons per million gallons of wastewater treated during the dry season, or 84 gallons per million gallons of influent wastewater treated on an annual basis. Magnesium hydroxide dosage would increase 19 percent on an annual basis, which equates to an incremental increase of 8 gallons per million gallons of influent wastewater treated. Methanol would be required as a supplemental carbon source to drive the denitrification process in the filters. Methanol usage would be equal to 8 gallons per million gallons of influent wastewater treated on an annual basis.

TABLE 6-24.
ADDITIONAL ENERGY CONSUMPTION FOR UPGRADING SBR PLANT TO ACHIEVE OBJECTIVE F SEASONAL

Yearly Energy Required	
Existing SBR Plant	1,014,000 kW-hours/year
Objective F Dry Season	1,190,000 kW-hours/year
Energy Increase for Upgrade	
Annual Quantity	71,000 kW-hours/year
Percent	7%
Increase per Volume of Plant Flow	311 kW-hours/MG

Footprint Requirements

The increased process footprint requirements associated with upgrading the existing SBR plant to achieve Objective F for dry season nutrient removal would include: expansion of the SBR tankage and addition of denitrification filters and methanol storage and feedings system as described for Objective B; and addition of alum storage and feeding and tertiary filtration system as described for Objective D. For the purposes of this analysis, it was assumed that the tertiary filtration and denitrification filters would be a combined filtration system. Table 6-25 summarizes the footprint area requirement for the four generic plant capacities.

TABLE 6-25.
ADDITIONAL PROCESS FOOTPRINT AREA REQUIRED FOR UPGRADING SBR PLANTS TO ACHIEVE OBJECTIVE F SEASONALLY

	Additional Area Required for Upgrade (square feet)					
Plant Design Capacity (mgd)	SBR Tank Expansion	Methanol Storage & Feed	Alum Storage and Feed Systems	Equalization Basin	Filters	**Total**
0.5	1,500	400	300	1,100	320	**2,120**
1.0	3,000	600	520	2,250	630	**4,300**
2.0	6,000	800	1,000	4,500	1,250	**13,550**
10	30,000	1,000	2,500	12,000	6,300	**51,800**

TABLE 6-2.
SEQUENCING BATCH REACTOR PLANT BIOWIN RESULTS FOR YEAR-ROUND NUTRIENT REMOVAL

	PROCESS DESIGN - MMWW FLOWS							WET SEASON - AWW FLOWS							DRY SEASON - ADW FLOWS						
		Upgraded Plant							Upgraded Plant							Upgraded Plant					
Description	Existing SBR	Obj. A	Obj. B	Obj. C	Obj. D	Obj. E	Obj. F	Existing SBR	Obj. A	Obj. B	Obj. C	Obj. D	Obj. E	Obj. F	Existing SBR	Obj. A	Obj. B	Obj. C	Obj. D	Obj. E	Obj. F
Nutrient Removal Goals																					
TIN (mg/L)		< 8	< 3			< 8	< 3		< 8	< 3			< 8	< 3		< 8	< 3			< 8	< 3
TP (mg/L)				< 1	< 0.1	< 1	< 0.1				< 1	< 0.1	< 1	< 0.1				< 1	< 0.1	< 1	< 0.1
Plant Size, Average Temperature																					
Influent + Recycle Flow, mgd	1.021	1.021	1.021	1.021	1.021	1.021	1.021	0.77	0.77	0.77	0.77	0.77	0.77	0.77	0.52	0.52	0.52	0.52	0.52	0.52	0.52
Temp, ^{o}C	10	10	10	10	10	10	10	10	10	10	10	10	10	10	15	15	15	15	15	15	15
Influent with Recycle Loads																					
BOD	166	166	166	166	166	166	166	221	221	221	221	221	221	221	326	326	326	326	326	326	326
TSS	228	228	228	228	228	228	228	304	304	304	304	304	304	304	449	449	449	449	449	449	449
VSS	152	152	152	152	152	152	152	202	202	202	202	202	202	202	258	258	258	258	258	258	258
TKN	27.6	27.6	27.6	27.6	27.6	27.6	27.6	36.76	36.76	36.76	36.76	36.76	36.76	36.76	54.41	54.41	54.41	54.41	54.41	54.41	54.41
TP	6.8	7.64	8.09	8.05	8.31	8.43	7.6	9.16	11	11.52	10.72	11.02	10.06	10.09	13.52	17.99	17.72	16.08	14.97	16.48	14.94
Alkalinity	2.01	2.01	2.01	2.01	2.01	2.01	2.01	2.68	2.68	2.68	2.68	2.68	2.68	2.68	4	4	4	4	4	4	4
pH	6.8	6.8	6.8	6.8	6.8	6.8	6.8	6.8	6.8	6.8	6.8	6.8	6.8	6.8	7	7	7	7	7	7	7
SBR Tank																					
No of Tanks	2	2	2	2	2	2	2	2	2	2	2	2	2	2	2	2	2	2	2	2	2
Each Tank Volume, MG	0.50	0.65	0.65	0.50	0.50	0.65	0.65	0.50	0.65	0.65	0.50	0.50	0.65	0.65	0.50	0.65	0.65	0.50	0.50	0.65	0.65
HRT, hrs	23.5	30.6	30.6	23.5	23.5	30.6	30.6	31.2	20.3	40.5	31.2	31.2	40.5	40.5	23.1	30.0	60.0	46.2	46.2	60.0	60.0
MLSS Conc., mg/L	3,000	2,800	2,800	3,000	3,000	2,800	2,800	3,000	3,000	3,000	3,000	3,000	3,000	3,000	3,500	3,300	3,300	3,500	3,500	3,300	3,300
DO Concentration, mg/L	2	2	2	2	2	2	2	2	2	2	2	2	2	2	2	2	2	2	2	2	2
Air Supply Rate, ft3/min	720	840	840	720	720	840	840	780	900	900	780	780	900	900	1,050	1,180	1,180	1,050	1,050	1,180	1,180
Cycle Time, hrs	8	8	8	8	8	8	8	8	8	8	8	8	8	8	8	8	8	8	8	8	8
SRT, days	16	20.8	20.8	16	16	20.8	20.8	16	20.8	20.8	16	16	20.8	20.8	16	20.8	20.8	16	16	20.8	20.8
Equalization Tank																					
Tank Volume, MG			0.3				0.3			0.3				0.3			0.3				0.3
Denite Filters																					
Required Area, SF			400				400			400				400			400				400
Methanol, gpd			20				20			15				15			10				10
Tertiary Filters																					
Filter Area (ft2) (From Capdet)					550		550					550		550					550		550
Chemical Addition																					
Alum Dosage, gpd				15	65	15	65				17	66	17	66				33	67	33	67
Magnesium Hydroxide Dosage, gpd	40	40	40	20	80	20	60	40	30	30	20	80	10	50	25	30	30	30	60	20	40
Effluent																					
BOD, mg/L	4.5	2.8	2.8	4.5	4.5	2.8	2.8	3.5	2.3	2.3	3.5	3.5	2.3	2.3	2.5	1.5	1.5	2.5	2.5	1.5	1.5
TSS, mg/L	16.0	10.0	10.0	16.0	16.0	10.0	10.0	10.5	7.3	7.3	10.5	10.5	7.3	7.3	6.6	5.0	5.0	6.6	6.6	5.0	5.0
Phosphorous (from Biowin), mg/L	0.875	0.65	0.65	1	0.1	0.65	0.65	0.61	0.5	0.5	0.61	0.61	0.5	0.5	0.4	3	3	0.4	0.4	3	3
Phosphorous (assumed), mg/L	2	2	2	1	0.1	1	0.1	2.67	2.67	2.67	1	0.1	1	0.1	4	4	4	1	0.1	1	0.1
Ammonia N, mg/L	5.2	2	2	5.2	5.2	2	2	6.5	2.2	2.2	6.5	6.5	2.2	2.2	0.5	0.2	0.2	0.5	0.5	0.2	0.2
TIN, mg/L	9.4	6.9	3	9.4	9.4	6.9	3	11.8	7.9	3	11.8	11.8	7.9	3	9	7.4	3	9	9	7.4	3
pH	6.4	6.4	6.4	6.5	6.5	6.5	6.5	6.5	6.5	6.5	6.5	6.5	6.5	6.5	6.5	6.6	6.6	6.5	6.5	6.6	6.6

TABLE 6-15.
SEQUENCING BATCH REACTORS BIOWIN RESULTS FOR SEASONAL NUTRIENT REMOVAL

	PROCESS DESIGN - MMDW FLOWS							DRY SEASON - ADW FLOWS						
		Upgraded Plant							Upgraded Plant					
Description	Existing SBR	Obj. A	Obj. B	Obj. C	Obj. D	Obj. E	Obj. F	Existing SBR	Obj. A	Obj. B	Obj. C	Obj. D	Obj. E	Obj. F
Nutrient Removal Goals														
TIN (mg/L)		< 8	< 3			< 8	< 3		< 8	< 3			< 8	< 3
TP (mg/L)				< 1	< 0.1	< 1	< 0.1				< 1	< 0.1	< 1	< 0.1
Plant Size, Average Temperature														
Influent + Recycle Flow, mgd	1.021	1.021	1.021	1.021	1.021	1.021	1.021	0.52	0.52	0.52	0.52	0.52	0.52	0.52
Temp, °C	10	10	10	10	10	10	10	15	15	15	15	15	15	15
Influent with Recycle Loads														
BOD	240	240	240	240	240	240	240	326	326	326	326	326	326	326
TSS	329	329	329	329	329	329	329	449	449	449	449	449	449	449
VSS	219	219	219	219	219	219	219	258	258	258	258	258	258	258
TKN	40	40	40	40	40	40	40	54.41	54.41	54.41	54.41	54.41	54.41	54.41
TP	9.9	12.21	12.5	11.73	10.98	12.95	10.98	13.52	17.99	17.72	16.08	14.97	16.48	14.94
Alkalinity	2.92	2.92	2.92	2.92	2.92	2.92	2.92	4	4	4	4	4	4	4
pH	7	7	7	7	7	7	7	7	7	7	7	7	7	7
SBR Tank														
No of Tanks	2	2	2	2	2	2	2	2	2	2	2	2	2	2
Each Tank Volume, MG	0.50	0.65	0.65	0.50	0.50	0.65	0.65	0.50	0.65	0.65	0.50	0.50	0.65	0.65
HRT, hrs	23.5	30.6	30.6	23.5	23.5	30.6	30.6	23.1	30.0	60.0	46.2	46.2	60.0	60.0
MLSS Conc., mg/L	3,000	3,000	3,000	3,000	3,000	3,000	3,000	3,500	3,300	3,300	3,500	3,500	3,300	3,300
DO Concentration, mg/L	2	2	2	2	2	2	2	2	2	2	2	2	2	2
Air Supply Rate, ft3/min	1,020	1,120	1,120	1,020	1,020	1,120	1,120	1,050	1,180	1,180	1,050	1,050	1,180	1,180
Cycle Time, hrs	8	8	8	8	8	8	8	8	8	8	8	8	8	8
SRT, days	16	20.8	20.8	16	16	20.8	20.8	16	20.8	20.8	16	16	20.8	20.8
Equalization Tank														
Tank Volume, MG			0.3				0.3			0.3				0.3
Denite Filters														
Required Area, SF			276				276			276				276
Methanol, gpd			15				15			10				10
Tertiary Filters														
Filter Area (ft2) (to be filled)					380		380					380		380
Chemical Addition														
Alum Dosage, gpd				20	66	20	66				33	67	33	67
Magnesium Hydroxide Dosage, gpd	40	30	30	30	70	20	50	25	30	30	30	60	20	40
Effluent														
BOD, mg/L	4.5	1.5	1.5	4.5	4.5	1.5	1.5	2.5	1.5	1.5	2.5	2.5	1.5	1.5
TSS, mg/L	9.5	6.0	6.0	9.5	9.5	6.0	6.0	6.6	5.0	5.0	6.6	6.6	5.0	5.0
Phosphorous (from Biowin), mg/L	0.52	3.75	3.75	0.52	0.52	3.75	3.75	0.4	3	3	0.4	0.4	3	3
Phosphorous (assumed), mg/L	3	3	3	1	0.1	1	0.1	4	4	4	1	0.1	1	0.1
Ammonia N, mg/L	0.5	0.3	0.3	0.5	0.5	0.3	0.3	0.5	0.2	0.2	0.5	0.5	0.2	0.2
TIN, mg/L	8	6.8	3	8	8	6.8	3	9	7.4	3	9	9	7.4	3
pH	6.3	6.5	6.5	6.5	6.5	6.5	6.5	6.5	6.6	6.6	6.5	6.5	6.6	6.6

CHAPTER 7.
TECHNOLOGICAL EVALUATION FOR TRICKLING FILTER, TRICKLING FILTER/SOLIDS CONTACT AND ROTATING BIOLOGICAL CONTACTOR PLANTS

7.1 BASE CASE/EXISTING SYSTEM

It is assumed that the base case for this category is a plant that consists of the following:

- A headworks with coarse screening system
- Primary clarifiers
- Secondary treatment system consisting of trickling filters (TF), rotating biological contactors (RBC) or trickling filters with solids contact (TF/SC)
- Secondary clarifiers.

Biowin cannot model trickling filter or RBC plants. For the purposes of this report, the existing and upgraded plant data for this category are assumed to be the same as for the conventional activated sludge plants discussed in Chapter 5, except as noted in this chapter.

Cost models for the base case were developed using CapdetWorks. Primary and secondary treatment facility sizing for a 1.0-mgd existing plant were modeled as follows:

- Trickling Filter—Based on the CapdetWorks cost model, a 1.0-mgd trickling filter plant consists of two primary clarifiers, each 26 feet in diameter, one trickling filter 34.3 feet in diameter, and two secondary clarifiers, each 36 feet in diameter.
- Rotating Biological Contactor—Based on the CapdetWorks cost model, a 1.0-mgd RBC plant consists of two primary clarifiers, each 26 feet in diameter, and two secondary clarifiers, each 36 feet in diameter. The RBC size was not listed in the CapdetWorks Model. A detention time of 1.44 hours was used for the RBC tank per Metcalf & Eddy.
- Trickling Filter/Solids Contact—Based on the CapdetWorks cost model, a 1.0-mgd trickling filter/solids contact plant consists of two primary clarifiers, each 26 feet in diameter, one trickling filter 34.3 feet in diameter, two 215-square-foot aeration tanks, and two secondary clarifiers, each 21 feet in diameter.

Table 7-1 shows the secondary footprint area for existing TF, RBC and TF/SC plants for the three generic plant capacities. The existing secondary area for TF and TF/SC plants includes the trickling filters and the secondary clarifiers. The existing secondary area for RBC plants includes the RBC tanks and the secondary clarifiers..

7.2 YEAR-ROUND NUTRIENT REMOVAL

Improvements required to provide year-round nutrient removal to achieve each treatment objective are described below. Process design data for all objectives are included in Table 5-2, which is attached at the end of Chapter 5.

TABLE 7-1. FOOTPRINT COMPARISON FOR EXISTING TRICKLING FILTER, ROTATING BIOLOGICAL CONTACTOR, AND TRICKLING FILTER/SOLIDS CONTACT SYSTEMS			
Plant Design Capacity (mgd)	Existing Secondary Area (square feet)		
	TF	RBC	TF/SC
1	6,750	10,190	4,120
10	60,550	80,590	33,980
150	897,340	1,180,480	500,940

7.2.1 Objective A

Process Description

The upgrade evaluated to achieve Objective A (TIN <8 mg/L) includes demolition of the existing secondary treatment process facilities (RBC, trickling filters, solids contact tanks and clarifiers) and construction of new aeration, anoxic tanks and membrane tanks. The existing headworks coarse screen would be replaced with a fine screen system in order to protect the downstream membranes. The aeration treatment process would be an MLE-MBR process, as described for the CAS system in Section 5.2.1. The new tanks to be constructed include a 0.2-MG aeration tank, a 0.1-MG anoxic tank, and a 20,000-gallon MBR tank. The existing aeration tank volume should also be added to the total tank volume for the upgrade. Figure 5-2 shows the process flow schematic for the upgraded plant.

Recycled Loads

Recycled nutrient loads would be the same as estimated for Objective A year-round treatment for a conventional activated sludge system, as described in Section 5.2.1 and listed in Table 5-3.

Sludge Production

Sludge production would be the same as estimated for Objective A year-round treatment for a conventional activated sludge system, as described in Section 5.2.1.

Energy Consumption

Upgrading a TF plant, RBC plant or TF/SC plant to achieve Objective A year-round would change the plant energy requirements as shown in Table 7-2, 7-3 or 7-4, respectively.

Chemical Usage

Chemical use would be the same as estimated for Objective A year-round treatment for a conventional activated sludge system, as described in Section 5.2.1.

Footprint Requirements

The proposed secondary footprint includes a new anoxic tank, aeration tank, MBR tank, aeration blower building, MBR blower building and RAS pump building. Table 7-5 compares the additional site area requirements for upgrading existing TF, RBC and TF/SC plants to achieve Objective A year-round for the three generic plant capacities. Refer to Appendix C for a detailed footprint summary of the existing and upgraded systems.

TABLE 7-2.
ADDITIONAL ENERGY CONSUMPTION FOR UPGRADING TF PLANT TO ACHIEVE OBJECTIVE A YEAR-ROUND

Yearly Energy Required	
Existing TF Plant	205,800 kW-hours/year
Objective A Year-Round	674,600 kW-hours/year
Energy Increase for Upgrade	
Annual Quantity	468,800 kW-hours/year
Percent	228%
Increase per Volume of Plant Flow	2,055 kW-hours/MG

TABLE 7-3.
ADDITIONAL ENERGY CONSUMPTION FOR UPGRADING RBC PLANT TO ACHIEVE OBJECTIVE A YEAR-ROUND

Yearly Energy Required	
Existing RBC Plant	141,700 kW-hours/year
Objective A Year-Round	656,100 kW-hours/year
Energy Increase for Upgrade	
Annual Quantity	514,400 kW-hours/year
Percent	363%
Increase per Volume of Plant Flow	2,295 kW-hours/MG

TABLE 7-4.
ADDITIONAL ENERGY CONSUMPTION FOR UPGRADING TF/SC PLANT TO ACHIEVE OBJECTIVE A YEAR-ROUND

Yearly Energy Required	
Existing TF/SC Plant	312,800 kW-hours/year
Objective A Year-Round	704,100 kW-hours/year
Energy Increase for Upgrade	
Annual Quantity	391,300 kW-hours/year
Percent	125%
Increase per Volume of Plant Flow	1,715 kW-hours/MG

TABLE 7-5.
ADDITIONAL FOOTPRINT REQUIREMENTS FOR UPGRADING TF, RBC AND TF/SC PLANTS TO ACHIEVE OBJECTIVE A YEAR-ROUND

	Additional Area Required for Upgrade (square feet)		
Plant Design Capacity (mgd)	TF Plants	RBC Plants	TF/SC Plants
1	1,089	(2,352)	3,724
10	3,049	(16,988)	29,621
150	(27,443)	(310,583)	368,953

7.2.2 Objective B

Process Description

The upgrade evaluated for achieving Objective B (TIN <3 mg/L) is to demolish the existing secondary treatment process facilities and construct new aeration, anoxic tanks and membrane tanks. The headworks coarse screen would be replaced with fine screen system in order to protect the downstream membranes. The aeration treatment process would be a 4-stage Bardenpho-MBR process as described for the CAS system in Section 5.2.2. The new tanks to be constructed include a 0.2-MG aeration tank, a 0.1-MG anoxic tank, a 0.05-MG post-anoxic tank, and a 20,000-gallon MBR tank. The existing aeration tank volume should also be added to the total tank volume for the upgrade. Figure 5-3 shows the upgraded process flow schematic.

Recycled Loads

Recycled nutrient loads would be the same as estimated for Objective B year-round treatment for a conventional activated sludge system, as described in Section 5.2.2 and listed in Table 5-6.

Sludge Production

Sludge production would be the same as estimated for Objective B year-round treatment for a conventional activated sludge system, as described in Section 5.2.2.

Energy Consumption

Upgrading a TF plant, RBC plant or TF/SC plant to achieve Objective B year-round would change the plant energy requirements as shown in Table 7-6, 7-7 or 7-8, respectively.

Chemical Usage

Chemical use would be the same as estimated for Objective B year-round treatment for a conventional activated sludge system, as described in Section 5.2.2.

Footprint Requirements

The proposed secondary footprint includes new anoxic tank, aeration tank, post anoxic tank, MBR tank, aeration blower building, MBR blower building, RAS pump building, and methanol containment tank. Table 7-9 compares the additional site area requirements for upgrading existing TF, RBC and TF/SC plants to achieve Objective B year-round for the three generic plant capacities. Refer to Appendix C for a detailed footprint summary of the existing and upgraded systems.

TABLE 7-6.
ADDITIONAL ENERGY CONSUMPTION FOR UPGRADING TF PLANT TO ACHIEVE OBJECTIVE B YEAR-ROUND

Yearly Energy Required	
Existing TF Plant	205,800 kW-hours/year
Objective B Year-Round	779,100 kW-hours/year
Energy Increase for Upgrade	
Annual Quantity	573,300 kW-hours/year
Percent	279%
Increase per Volume of Plant Flow	2,513 kW-hours/MG

TABLE 7-7.
ADDITIONAL ENERGY CONSUMPTION FOR UPGRADING RBC PLANT TO ACHIEVE OBJECTIVE B YEAR-ROUND

Yearly Energy Required	
Existing RBC Plant	141,700 kW-hours/year
Objective B Year-Round	760,600 kW-hours/year
Energy Increase for Upgrade	
Annual Quantity	618,900 kW-hours/year
Percent	437%
Increase per Volume of Plant Flow	2,713 kW-hours/MG

TABLE 7-8.
ADDITIONAL ENERGY CONSUMPTION FOR UPGRADING TF/SC PLANT TO ACHIEVE OBJECTIVE B YEAR-ROUND

Yearly Energy Required	
Existing TF/SC Plant	312,800 kW-hours/year
Objective B Year-Round	808,600 kW-hours/year
Energy Increase for Upgrade	
Annual Quantity	495,800 kW-hours/year
Percent	159%
Increase per Volume of Plant Flow	2,174 kW-hours/MG

TABLE 7-9.
ADDITIONAL FOOTPRINT REQUIREMENTS FOR UPGRADING TF, RBC AND TF/SC PLANTS TO ACHIEVE OBJECTIVE B YEAR-ROUND

	Additional Area Required for Upgrade (square feet)		
Plant Design Capacity (mgd)	TF Plants	RBC Plants	TF/SC Plants
1	2,396	(1,045)	5,031
10	11,761	(8,276)	38,333
150	(56,192)	(339,332)	340,204

7.2.3 Objective C

Process Description

Objective C (TP <1.0 mg/L) can be achieved by adding new alum storage tanks and feed system for phosphorus removal and magnesium hydroxide for pH control. Biowin cannot model TF/RBC plants, so alum and magnesium hydroxide dosages are assumed to be same as for the CAS system Objective C upgrade described in Section 5.2.3. No modifications to the solids treatment process are proposed.

Recycled Loads

Recycled nutrient loads would be the same as estimated for Objective C year-round treatment for a conventional activated sludge system, as described in Section 5.2.3 and listed in Table 5-9.

Sludge Production

Sludge production would be the same as estimated for Objective C year-round treatment for a conventional activated sludge system, as described in Section 5.2.3.

Energy Consumption

Upgrading a TF plant, RBC plant or TF/SC plant to achieve Objective C year-round would change the plant energy requirements as shown in Table 7-10, 7-11 or 7-12, respectively.

TABLE 7-10.
ADDITIONAL ENERGY CONSUMPTION FOR UPGRADING TF PLANT TO ACHIEVE OBJECTIVE C YEAR-ROUND

Yearly Energy Required	
Existing TF Plant	205,800 kW-hours/year
Objective C Year-Round	220,000 kW-hours/year
Energy Increase for Upgrade	
Annual Quantity	14,300 kW-hours/year
Percent	7%
Increase per Volume of Plant Flow	62 kW-hours/MG

TABLE 7-11.
ADDITIONAL ENERGY CONSUMPTION FOR UPGRADING RBC PLANT TO ACHIEVE OBJECTIVE C YEAR-ROUND

Yearly Energy Required	
Existing RBC Plant	141,700 kW-hours/year
Objective C Year-Round	168,700 kW-hours/year
Energy Increase for Upgrade	
Annual Quantity	27,000 kW-hours/year
Percent	19%
Increase per Volume of Plant Flow	118 kW-hours/MG

TABLE 7-12.
ADDITIONAL ENERGY CONSUMPTION FOR UPGRADING TF/SC PLANT TO ACHIEVE OBJECTIVE C YEAR-ROUND

Yearly Energy Required	
Existing TF/SC Plant	312,800 kW-hours/year
Objective C Year-Round	326,500 kW-hours/year
Energy Increase for Upgrade	
Annual Quantity	13,700 kW-hours/year
Percent	4%
Increase per Volume of Plant Flow	60 kW-hours/MG

Chemical Usage

Chemical use would be the same as estimated for Objective C year-round treatment for a conventional activated sludge system, as described in Section 5.2.3.

Footprint Requirements

The total additional area required for alum and magnesium hydroxide containment tanks to achieve Objective C year-round is 186 square feet for a 1.0-mgd plant. Refer to Appendix B for detailed storage tank calculations.

7.2.4 Objective D

Process Description

Objective D (TP <0.1 mg/L) can be achieved by adding tertiary filters in addition to a chemical precipitation process using alum and magnesium hydroxide. Alum and magnesium hydroxide dosages are assumed to be same as for the CAS system Objective D upgrade described in Section 5.2.4. No modifications to the solids treatment process are proposed.

Recycled Loads

Recycled nutrient loads would be the same as estimated for Objective D year-round treatment for a conventional activated sludge system, as described in Section 5.2.4 and listed in Table 5-12.

Sludge Production

Sludge production would be the same as estimated for Objective D year-round treatment for a conventional activated sludge system, as described in Section 5.2.4.

Energy Consumption

Upgrading a TF plant, RBC plant or TF/SC plant to achieve Objective D year-round would change the plant energy requirements as shown in Table 7-13, 7-14 or 7-15, respectively.

Chemical Usage

Chemical use would be the same as estimated for Objective D year-round treatment for a conventional activated sludge system, as described in Section 5.2.4.

Footprint Requirements

The total additional area required for the tertiary filters and the alum and magnesium hydroxide containment tanks is 762 square feet for a 1.0-mgd plant. Refer to Appendix B for detailed storage tank calculations and Appendix C for tertiary filter footprint requirements.

TABLE 7-13. ADDITIONAL ENERGY CONSUMPTION FOR UPGRADING TF PLANT TO ACHIEVE OBJECTIVE D YEAR-ROUND	
Yearly Energy Required	
Existing TF Plant	205,800 kW-hours/year
Objective D Year-Round	234,300 kW-hours/year
Energy Increase for Upgrade	
Annual Quantity	28,600 kW-hours/year
Percent	14%
Increase per Volume of Plant Flow	125 kW-hours/MG

TABLE 7-14. ADDITIONAL ENERGY CONSUMPTION FOR UPGRADING RBC PLANT TO ACHIEVE OBJECTIVE D YEAR-ROUND	
Yearly Energy Required	
Existing RBC Plant	141,700 kW-hours/year
Objective D Year-Round	177,900 kW-hours/year
Energy Increase for Upgrade	
Annual Quantity	36,200 kW-hours/year
Percent	26%
Increase per Volume of Plant Flow	159 kW-hours/MG

TABLE 7-15. ADDITIONAL ENERGY CONSUMPTION FOR UPGRADING TF/SC PLANT TO ACHIEVE OBJECTIVE D YEAR-ROUND	
Yearly Energy Required	
Existing TF/SC Plant	312,800 kW-hours/year
Objective D Year-Round	335,500 kW-hours/year
Energy Increase for Upgrade	
Annual Quantity	22,700 kW-hours/year
Percent	7%
Increase per Volume of Plant Flow	100 kW-hours/MG

7.2.5 Objective E

Process Description

Objective E (TIN <8 mg/L and TP <1.0 mg/L) can be achieved by converting the existing plant to an MLE-MBR process and by adding alum and magnesium hydroxide feed systems and storage tanks for phosphorus removal, as described in Section 5.2.5.

Recycled Loads

Recycled nutrient loads would be the same as estimated for Objective E year-round treatment for a conventional activated sludge system, as described in Section 5.2.5 and listed in Table 5-15.

Sludge Production

Sludge production would be the same as estimated for Objective E year-round treatment for a conventional activated sludge system, as described in Section 5.2.5.

Energy Consumption

Upgrading a TF plant, RBC plant or TF/SC plant to achieve Objective E year-round would change the plant energy requirements as shown in Table 7-16, 7-7 or 7-18, respectively.

TABLE 7-16.
ADDITIONAL ENERGY CONSUMPTION FOR UPGRADING TF PLANT TO ACHIEVE OBJECTIVE E YEAR-ROUND

Yearly Energy Required	
Existing TF Plant	205,800 kW-hours/year
Objective E Year-Round	690,500 kW-hours/year
Energy Increase for Upgrade	
Annual Quantity	484,700 kW-hours/year
Percent	236%
Increase per Volume of Plant Flow	2,125 kW-hours/MG

TABLE 7-17.
ADDITIONAL ENERGY CONSUMPTION FOR UPGRADING RBC PLANT TO ACHIEVE OBJECTIVE E YEAR-ROUND

Yearly Energy Required	
Existing RBC Plant	141,700 kW-hours/year
Objective E Year-Round	690,500 kW-hours/year
Energy Increase for Upgrade	
Annual Quantity	548,800 kW-hours/year
Percent	387%
Increase per Volume of Plant Flow	2,046 kW-hours/MG

TABLE 7-18.
ADDITIONAL ENERGY CONSUMPTION FOR UPGRADING TF/SC PLANT TO ACHIEVE OBJECTIVE E YEAR-ROUND

Yearly Energy Required	
Existing TF/SC Plant	312,800 kW-hours/year
Objective E Year-Round	690,500 kW-hours/year
Energy Increase for Upgrade	
Annual Quantity	377,700 kW-hours/year
Percent	121%
Increase per Volume of Plant Flow	1,656 kW-hours/MG

Chemical Usage

Chemical use would be the same as estimated for Objective E year-round treatment for a conventional activated sludge system, as described in Section 5.2.5.

Footprint Requirements

The proposed secondary footprint includes new anoxic tank, aeration tank, MBR tank, aeration blower building, MBR blower building, RAS pump building and containment tanks for alum and magnesium hydroxide storage. Table 7-19 compares the additional site area requirements for upgrading existing TF, RBC and TF/SC plants to achieve Objective E year-round for the three generic plant capacities. Refer to Appendix C for a detailed footprint summary of the existing and upgraded systems.

TABLE 7-19.
ADDITIONAL FOOTPRINT REQUIREMENTS FOR UPGRADING TF, RBC AND TF/SC PLANTS TO ACHIEVE OBJECTIVE E YEAR-ROUND

	Additional Area Required for Upgrade (square feet)		
Plant Design Capacity (mgd)	TF Plants	RBC Plants	TF/SC Plants
1	1,089	(2,352)	3,724
10	3,485	(16,553)	30,056
150	(26,136)	(309,276)	370,260

7.2.6 Objective F

Process Description

Objective F (TIN <3 mg/L and TP <0.1 mg/L) can be achieved by converting the existing plant to a 4-stage Bardenpho process and by adding alum and magnesium hydroxide feed systems and storage tanks for phosphorus removal, as described in Section 5.2.6.

Recycled Loads

Recycled nutrient loads would be the same as estimated for Objective F year-round treatment for a conventional activated sludge system, as described in Section 5.2.6 and listed in Table 5-18.

Sludge Production

Sludge production would be the same as estimated for Objective F year-round treatment for a conventional activated sludge system, as described in Section 5.2.6.

Energy Consumption

Upgrading a TF plant, RBC plant or TF/SC plant to achieve Objective F year-round would change the plant energy requirements as shown in Table 7-20, 7-21 or 7-22, respectively.

Chemical Usage

Chemical use would be the same as estimated for Objective F year-round treatment for a conventional activated sludge system, as described in Section 5.2.6.

TABLE 7-20.
ADDITIONAL ENERGY CONSUMPTION FOR UPGRADING TF PLANT TO ACHIEVE OBJECTIVE F YEAR-ROUND

Yearly Energy Required	
Existing TF Plant	205,800 kW-hours/year
Objective F Year-Round	820,300 kW-hours/year
Energy Increase for Upgrade	
Annual Quantity	614,500 kW-hours/year
Percent	300%
Increase per Volume of Plant Flow	2,694 kW-hours/MG

TABLE 7-21.
ADDITIONAL ENERGY CONSUMPTION FOR UPGRADING RBC PLANT TO ACHIEVE OBJECTIVE F YEAR-ROUND

Yearly Energy Required	
Existing RBC Plant	141,700 kW-hours/year
Objective F Year-Round	820,300 kW-hours/year
Energy Increase for Upgrade	
Annual Quantity	678,600 kW-hours/year
Percent	479%
Increase per Volume of Plant Flow	2,975 kW-hours/MG

TABLE 7-22.
ADDITIONAL ENERGY CONSUMPTION FOR UPGRADING TF/SC PLANT TO ACHIEVE OBJECTIVE F YEAR-ROUND

Yearly Energy Required	
Existing TF/SC Plant	312,800 kW-hours/year
Objective F Year-Round	820,300 kW-hours/year
Energy Increase for Upgrade	
Annual Quantity	507,500 kW-hours/year
Percent	162%
Increase per Volume of Plant Flow	2,225 kW-hours/MG

Footprint Requirements

The proposed secondary footprint includes new anoxic tank, aeration tank, post anoxic tank, MBR tank, aeration blower building, MBR blower building, RAS pump building and alum, magnesium hydroxide and methanol containment tanks. Table 7-23 compares the additional site area requirements for upgrading existing TF, RBC and TF/SC plants to achieve Objective F year-round for the three generic plant capacities. Refer to Appendix C for a detailed footprint summary of the existing and upgraded systems.

TABLE 7-23. ADDITIONAL FOOTPRINT REQUIREMENTS FOR UPGRADING TF, RBC AND TF/SC PLANTS TO ACHIEVE OBJECTIVE F YEAR-ROUND			
	Additional Area Required for Upgrade (square feet)		
Plant Design Capacity (mgd)	TF Plants	RBC Plants	TF/SC Plants
1	3,703	261	6,338
10	23,522	3,485	50,094
150	120,661	(162,479)	517,057

7.3 SEASONAL NUTRIENT REMOVAL

Improvements required to provide seasonal nutrient removal to achieve each treatment objective are described below. Process design data for all objectives are included in Table 5-21, which is attached at the end of Chapter 5.

7.3.1 Objective A

Process Description

The Objective A (TIN <8 mg/L) treatment process for seasonal nutrient removal would be an MLE system. The improvements would be essentially the same as described for CAS seasonal treatment in Section 5.3.1.

Recycled Loads

Recycled nutrient loads would be the same as estimated for Objective A seasonal treatment for a conventional activated sludge system, as described in Section 5.3.1 and listed in Table 5-22.

Sludge Production

Sludge production would be the same as estimated for Objective A seasonal treatment for a conventional activated sludge system, as described in Section 5.3.1.

Energy Consumption

Upgrading a TF plant, RBC plant or TF/SC plant to achieve Objective A seasonally would change the plant energy requirements as shown in Table 7-24, 7-25 or 7-26, respectively.

TABLE 7-24. ADDITIONAL ENERGY CONSUMPTION FOR UPGRADING TF PLANT TO ACHIEVE OBJECTIVE A SEASONALLY	
Yearly Energy Required	
Existing TF Plant	205,800 kW-hours/year
Objective A Seasonal	370,250 kW-hours/year
Energy Increase for Upgrade	
Annual Quantity	164,500 kW-hours/year
Percent	80%
Increase per Volume of Plant Flow	721 kW-hours/MG

TABLE 7-25.
ADDITIONAL ENERGY CONSUMPTION FOR UPGRADING RBC PLANT TO ACHIEVE OBJECTIVE A SEASONALLY

Yearly Energy Required	
Existing RBC Plant	205,900 kW-hours/year
Objective A Seasonal	351,800 kW-hours/year
Energy Increase for Upgrade	
Annual Quantity	210,100 kW-hours/year
Percent	148%
Increase per Volume of Plant Flow	921 kW-hours/MG

TABLE 7-26.
ADDITIONAL ENERGY CONSUMPTION FOR UPGRADING TF/SC PLANT TO ACHIEVE OBJECTIVE A SEASONALLY

Yearly Energy Required	
Existing TF/SC Plant	312,800 kW-hours/year
Objective A Seasonal	399,800 kW-hours/year
Energy Increase for Upgrade	
Annual Quantity	87,000 kW-hours/year
Percent	28%
Increase per Volume of Plant Flow	381 kW-hours/MG

Chemical Usage

Chemical use would be the same as estimated for Objective A seasonal treatment for a conventional activated sludge system, as described in Section 5.3.1.

Footprint Requirements

Table 7-27 compares the additional site area requirements for upgrading existing TF, RBC and TF/SC plants to achieve Objective A seasonally for the three generic plant capacities. Refer to Appendix C for detailed footprint areas of the existing system and the proposed system.

TABLE 7-27.
ADDITIONAL FOOTPRINT REQUIREMENTS FOR UPGRADING TF, RBC AND TF/SC PLANTS TO ACHIEVE OBJECTIVE A SEASONALLY

	Additional Area Required for Upgrade (square feet)		
Plant Design Capacity (mgd)	TF Plants	RBC Plants	TF/SC Plants
1	3,267	(174)	5,902
10	27,878	7,841	54,450
150	352,836	69,696	749,232

7.3.2 Objective B

Process Description

The Objective B (TIN <3 mg/L) treatment processes for seasonal nutrient removal would be to upgrade to a four-stage Bardenpho process with the addition of methanol. The improvements would be essentially the same as described for CAS seasonal treatment in Section 5.3.2.

Recycled Loads

Recycled nutrient loads would be the same as estimated for Objective B seasonal treatment for a conventional activated sludge system, as described in Section 5.3.2 and listed in Table 5-25.

Sludge Production

Sludge production would be the same as estimated for Objective B seasonal treatment for a conventional activated sludge system, as described in Section 5.3.2.

Energy Consumption

Upgrading a TF plant, RBC plant or TF/SC plant to achieve Objective B seasonally would change the plant energy requirements as shown in Table 7-28, 7-29 or 7-30, respectively.

TABLE 7-28.
ADDITIONAL ENERGY CONSUMPTION FOR UPGRADING TF PLANT TO ACHIEVE OBJECTIVE B SEASONALLY

Yearly Energy Required	
Existing TF Plant	205,800 kW-hours/year
Objective B Seasonal	384,300 kW-hours/year
Energy Increase for Upgrade	
Annual Quantity	178,500 kW-hours/year
Percent	87%
Increase per Volume of Plant Flow	782 kW-hours/MG

TABLE 7-29.
ADDITIONAL ENERGY CONSUMPTION FOR UPGRADING RBC PLANT TO ACHIEVE OBJECTIVE B SEASONALLY

Yearly Energy Required	
Existing RBC Plant	141,700 kW-hours/year
Objective B Seasonal	365,800 kW-hours/year
Energy Increase for Upgrade	
Annual Quantity	224,100 kW-hours/year
Percent	158%
Increase per Volume of Plant Flow	982 kW-hours/MG

TABLE 7-30.
ADDITIONAL ENERGY CONSUMPTION FOR UPGRADING TF/SC PLANT TO ACHIEVE OBJECTIVE B SEASONALLY

Yearly Energy Required	
Existing TF/SC Plant	312,800 kW-hours/year
Objective B Seasonal	413,800 kW-hours/year
Energy Increase for Upgrade	
Annual Quantity	101,000 kW-hours/year
Percent	32%
Increase per Volume of Plant Flow	443 kW-hours/MG

Chemical Usage

Chemical use would be the same as estimated for Objective B seasonal treatment for a conventional activated sludge system, as described in Section 5.3.2.

Footprint Requirements

Table 7-31 compares the additional site area requirements for upgrading existing TF, RBC and TF/SC plants to achieve Objective B seasonally for the three generic plant capacities. Refer to Appendix C for detailed footprint areas of the existing system and the proposed system.

TABLE 7-31.
ADDITIONAL FOOTPRINT REQUIREMENTS FOR UPGRADING TF, RBC AND TF/SC PLANTS TO ACHIEVE OBJECTIVE B SEASONALLY

	Additional Area Required for Upgrade (square feet)		
Plant Design Capacity (mgd)	TF Plants	RBC Plants	TF/SC Plants
1	4,574	1,133	7,209
10	37,462	17,424	64,033
150	349,787	66,647	746,183

7.3.3 Objective C

Process Description

For Objective C (TP <1 mg/L), the only difference between the year-round and the seasonal nutrient removal is that the capital facilities would be sized for either MMDWF or ADWF instead of the MMWWF. The improvements would be essentially the same as for year-round treatment.

Recycled Loads

Recycled nutrient loads would be the same as estimated for Objective C seasonal treatment for a conventional activated sludge system, as described in Section 5.3.3 and listed in Table 5-28.

Sludge Production

Sludge production would be the same as estimated for Objective C seasonal treatment for a conventional activated sludge system, as described in Section 5.3.3.

Energy Consumption

Upgrading a TF plant, RBC plant or TF/SC plant to achieve Objective C seasonally would change the plant energy requirements as shown in Table 7-32, 7-33 or 7-34, respectively.

TABLE 7-32.
ADDITIONAL ENERGY CONSUMPTION FOR UPGRADING TF PLANT TO ACHIEVE OBJECTIVE C SEASONALLY

Yearly Energy Required	
Existing TF Plant	205,800 kW-hours/year
Objective C Seasonal	220,400 kW-hours/year
Energy Increase for Upgrade	
Annual Quantity	14,600 kW-hours/year
Percent	7%
Increase per Volume of Plant Flow	64 kW-hours/MG

TABLE 7-33.
ADDITIONAL ENERGY CONSUMPTION FOR UPGRADING RBC PLANT TO ACHIEVE OBJECTIVE C SEASONALLY

Yearly Energy Required	
Existing RBC Plant	141,700 kW-hours/year
Objective C Seasonal	166,900 kW-hours/year
Energy Increase for Upgrade	
Annual Quantity	25,500 kW-hours/year
Percent	18%
Increase per Volume of Plant Flow	110 kW-hours/MG

TABLE 7-34.
ADDITIONAL ENERGY CONSUMPTION FOR UPGRADING TF/SC PLANT TO ACHIEVE OBJECTIVE C SEASONALLY

Yearly Energy Required	
Existing TF/SC Plant	312,800 kW-hours/year
Objective C Seasonal	327,200 kW-hours/year
Energy Increase for Upgrade	
Annual Quantity	14,400 kW-hours/year
Percent	5%
Increase per Volume of Plant Flow	63 kW-hours/MG

Chemical Usage

Chemical use would be the same as estimated for Objective C seasonal treatment for a conventional activated sludge system, as described in Section 5.3.3.

Footprint Requirements

The total additional area required for alum and magnesium hydroxide containment tanks to achieve Objective C seasonally is 186 square feet for a 1.0-mgd plant (the same as for Objective C year-round treatment). Refer to Appendix B for detailed storage tank calculations.

7.3.4 Objective D

Process Description

For Objective D (TP <0.1 mg/L), the only difference between the year-round and the seasonal nutrient removal is that the capital facilities would be sized for either MMDWF or ADWF instead of the MMWWF. The improvements would be essentially the same as for year-round treatment.

Recycled Loads

Recycled nutrient loads would be the same as estimated for Objective D seasonal treatment for a conventional activated sludge system, as described in Section 5.3.4 and listed in Table 5-30.

Sludge Production

Sludge production would be the same as estimated for Objective D seasonal treatment for a conventional activated sludge system, as described in Section 5.3.4.

Energy Consumption

Upgrading a TF plant, RBC plant or TF/SC plant to achieve Objective D seasonally would change the plant energy requirements as shown in Table 7-35, 7-36 or 7-37, respectively.

TABLE 7-35.
ADDITIONAL ENERGY CONSUMPTION FOR UPGRADING TF PLANT TO ACHIEVE OBJECTIVE D SEASONALLY

Yearly Energy Required	
Existing TF Plant	205,800 kW-hours/year
Objective D Seasonal	223,100 kW-hours/year
Energy Increase for Upgrade	
Annual Quantity	17,300 kW-hours/year
Percent	8%
Increase per Volume of Plant Flow	76 kW-hours/MG

TABLE 7-36. ADDITIONAL ENERGY CONSUMPTION FOR UPGRADING RBC PLANT TO ACHIEVE OBJECTIVE D SEASONALLY	
Yearly Energy Required	
Existing RBC Plant	141,700 kW-hours/year
Objective D Seasonal	166,900 kW-hours/year
Energy Increase for Upgrade	
Annual Quantity	25,200 kW-hours/year
Percent	18%
Increase per Volume of Plant Flow	110 kW-hours/MG

TABLE 7-37. ADDITIONAL ENERGY CONSUMPTION FOR UPGRADING TF/SC PLANT TO ACHIEVE OBJECTIVE D SEASONALLY	
Yearly Energy Required	
Existing TF/SC Plant	312,800 kW-hours/year
Objective D Seasonal	327,200 kW-hours/year
Energy Increase for Upgrade	
Annual Quantity	14,400 kW-hours/year
Percent	5%
Increase per Volume of Plant Flow	63 kW-hours/MG

Chemical Usage

Chemical use would be the same as estimated for Objective D seasonal treatment for a conventional activated sludge system, as described in Section 5.3.4.

Footprint Requirements

Additional footprint area required for Objective D is the same as for Objective D seasonal treatment for a CAS plant, as listed in Table 5-32. This footprint includes alum, magnesium hydroxide containment tanks and tertiary filters.

7.3.5 Objective E

Process Description

The Objective E (TIN <8 mg/L and TP <1 mg/L) treatment process for seasonal nutrient removal would be essentially the same as described for CAS seasonal treatment in Section 5.3.5.

Recycled Loads

Recycled nutrient loads would be the same as estimated for Objective E seasonal treatment for a conventional activated sludge system, as described in Section 5.3.5 and listed in Table 5-33.

Sludge Production

Sludge production would be the same as estimated for Objective E seasonal treatment for a conventional activated sludge system, as described in Section 5.3.5.

Energy Consumption

Upgrading a TF plant, RBC plant or TF/SC plant to achieve Objective E seasonally would change the plant energy requirements as shown in Table 7-38, 7-39 or 7-40, respectively.

TABLE 7-38.
ADDITIONAL ENERGY CONSUMPTION FOR UPGRADING TF PLANT TO ACHIEVE OBJECTIVE E SEASONALLY

Yearly Energy Required	
Existing TF Plant	205,800 kW-hours/year
Objective E Seasonal	390,200 kW-hours/year
Energy Increase for Upgrade	
Annual Quantity	184,400 kW-hours/year
Percent	90%
Increase per Volume of Plant Flow	808 kW-hours/MG

TABLE 7-39.
ADDITIONAL ENERGY CONSUMPTION FOR UPGRADING RBC PLANT TO ACHIEVE OBJECTIVE E SEASONALLY

Yearly Energy Required	
Existing RBC Plant	141,700 kW-hours/year
Objective E Seasonal	390,200 kW-hours/year
Energy Increase for Upgrade	
Annual Quantity	248,500 kW-hours/year
Percent	175%
Increase per Volume of Plant Flow	1,089 kW-hours/MG

TABLE 7-40.
ADDITIONAL ENERGY CONSUMPTION FOR UPGRADING TF/SC PLANT TO ACHIEVE OBJECTIVE E SEASONALLY

Yearly Energy Required	
Existing TF/SC Plant	312,800 kW-hours/year
Objective E Seasonal	390,200 kW-hours/year
Energy Increase for Upgrade	
Annual Quantity	77,400 kW-hours/year
Percent	25%
Increase per Volume of Plant Flow	339 kW-hours/MG

Chemical Usage

Chemical use would be the same as estimated for Objective E seasonal treatment for a conventional activated sludge system, as described in Section 5.3.5.

Footprint Requirements

Table 7-41 compares the additional site area requirements for upgrading existing TF, RBC and TF/SC plants to achieve Objective E seasonally for the three generic plant capacities. Refer to Appendix C for detailed footprint areas of the existing system and the proposed system.

TABLE 7-41.
ADDITIONAL FOOTPRINT REQUIREMENTS FOR UPGRADING TF, RBC AND TF/SC PLANTS TO ACHIEVE OBJECTIVE E SEASONALLY

	Additional Area Required for Upgrade (square feet)		
Plant Design Capacity (mgd)	TF Plants	RBC Plants	TF/SC Plants
1	3,267	(174)	5,902
10	29,621	9,583	56,192
150	375,487	92,347	771,883

7.3.6 Objective F

Process Description

The Objective F (TIN <3 mg/L and TP <0.1 mg/L) treatment process for seasonal nutrient removal would be essentially the same as described for CAS seasonal treatment in Section 5.3.6.

Recycled Loads

Recycled nutrient loads would be the same as estimated for Objective F seasonal treatment for a conventional activated sludge system, as described in Section 5.3.6 and listed in Table 5-36.

Sludge Production

Sludge production would be the same as estimated for Objective F seasonal treatment for a conventional activated sludge system, as described in Section 5.3.6.

Energy Consumption

Upgrading a TF plant, RBC plant or TF/SC plant to achieve Objective F seasonally would change the plant energy requirements as shown in Table 7-42, 7-43 or 7-44, respectively.

TABLE 7-42.
ADDITIONAL ENERGY CONSUMPTION FOR UPGRADING TF PLANT TO ACHIEVE OBJECTIVE F SEASONALLY

Yearly Energy Required	
Existing TF Plant	205,800 kW-hours/year
Objective F Seasonal	414,300 kW-hours/year
Energy Increase for Upgrade	
Annual Quantity	208,600 kW-hours/year
Percent	101%
Increase per Volume of Plant Flow	914 kW-hours/MG

TABLE 7-43.
ADDITIONAL ENERGY CONSUMPTION FOR UPGRADING RBC PLANT TO ACHIEVE OBJECTIVE F SEASONALLY

Yearly Energy Required	
Existing RBC Plant	141,700 kW-hours/year
Objective F Seasonal	414,300 kW-hours/year
Energy Increase for Upgrade	
Annual Quantity	272,600 kW-hours/year
Percent	192%
Increase per Volume of Plant Flow	1,195 kW-hours/MG

TABLE 7-44.
ADDITIONAL ENERGY CONSUMPTION FOR UPGRADING TF/SC PLANT TO ACHIEVE OBJECTIVE F SEASONALLY

Yearly Energy Required	
Existing TF/SC Plant	312,800 kW-hours/year
Objective F Seasonal	414,300 kW-hours/year
Energy Increase for Upgrade	
Annual Quantity	101,500 kW-hours/year
Percent	32%
Increase per Volume of Plant Flow	445 kW-hours/MG

Chemical Usage

Chemical use would be the same as estimated for Objective F seasonal treatment for a conventional activated sludge system, as described in Section 5.3.6.

Footprint Requirements

Table 7-45 compares the additional site area requirements for upgrading existing TF, RBC and TF/SC plants to achieve Objective F seasonally for the three generic plant capacities. Refer to Appendix C for detailed footprint areas of the existing system and the proposed system.

TABLE 7-45.
ADDITIONAL FOOTPRINT REQUIREMENTS FOR UPGRADING TF, RBC AND TF/SC PLANTS TO ACHIEVE OBJECTIVE F SEASONALLY

	Additional Area Required for Upgrade (square feet)		
Plant Design Capacity (mgd)	TF Plants	RBC Plants	TF/SC Plants
1	5,445	2,004	8,080
10	45,738	25,700	72,310
150	468,706	185,566	865,102

CHAPTER 8.
TECHNOLOGICAL EVALUATION FOR MEMBRANE BIOLOGICAL REACTOR PLANTS

8.1 BASE CASE/EXISTING SYSTEM

A base case model was developed in Biowin representing a membrane biological reactor (MBR) plant with a capacity of 1.0 mgd (MMWWF). Figure 8-1 depicts the process flow schematic for the modeled MBR plant. The plant features a pre-anoxic tank, an aeration tank, a post-anoxic tank and a membrane bioreactor. Waste sludge is mechanically thickened and then stabilized in an aerobic digester.

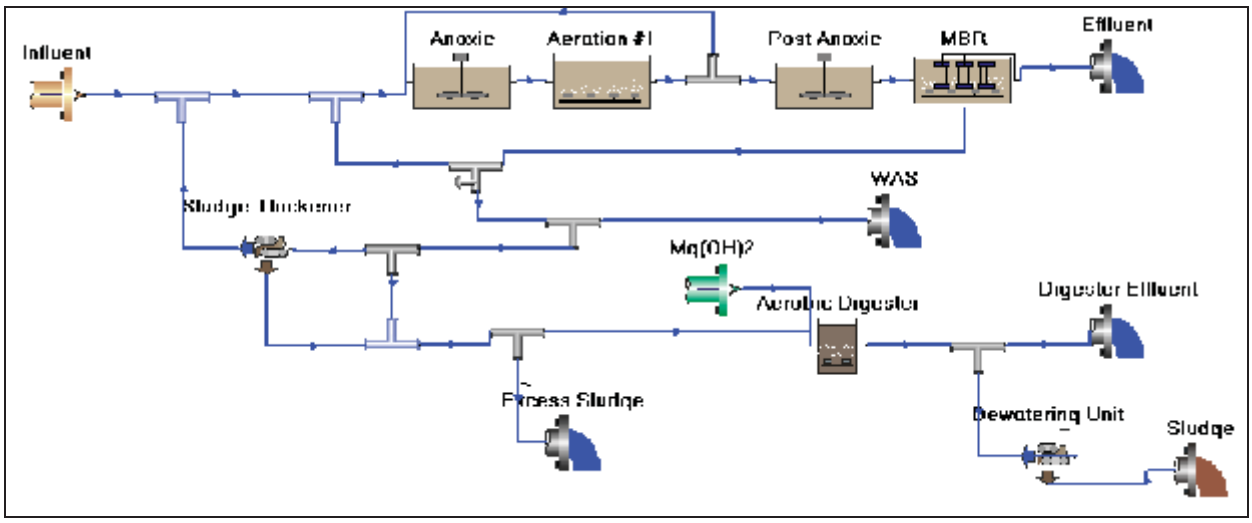

Figure 8-1. Process Flow Schematic for an Existing MBR Plant

Table 8-1 summarizes the assumed number of aeration tank trains and number of aerators per train, based on annual average plant capacity. According to the design criteria, the average annual flow for a plant with MMWWF of 1.0 mgd is 0.63 mgd. Therefore, the modeled 1.0-mgd plant has two aeration tank trains; it is assumed that each train will have two membrane tanks, for a total of four membrane tanks. One tank is assumed to be redundant, so the flow handled by each tank is calculated as the total flow divided by 3. The membranes were sized to achieve a peak-day flux of 20 gpd/ft^2. Table 8-2 shows the sizing and flux rate calculations for the 1.0-mgd plant and corresponding calculations for plants with capacities of 10 mgd and 100 mgd.

Using a packing density of 8.0 ft^2/ft^3, the volume of each membrane tank was determined to be 20,000 gallons. The total volume of the three firm membrane units is 60,000 gallons. This volume was used in the MBR Biowin model. The total tank volume of the modeled MBR process is 0.66 MG; the pre- and post-anoxic tanks each account for 18 percent of the total volume, the aerobic tank for 55 percent, and the MBR tanks for 9 percent.

Table 8-3 summarizes the existing MBR tank design data at MMWWF conditions. The Biowin model results indicate that the modeled MBR plant would produce a final effluent with a TIN concentration of 1.7 mg/L; however, to be conservative, it was assumed that the TIN in the effluent is just less than 8 mg/L.

TABLE 8-1.
NUMBER OF AERATION TANK TRAINS BASED ON TREATMENT PLANT AVERAGE ANNUAL FLOW

AAF (mgd)	No. of Aeration Tank Trains	No. of Tanks per Train
0.5 – 2	2	1
2 – 4	3	1
4 – 10	4	1
10 – 20	6	2
20 – 30	8	2
30 – 40	10	3
40 – 50	12	3
50 – 70	14	3
70 – 100	16	4

TABLE 8-2.
NUMBER OF TANKS TRAINS BASED ON PEAK PLANT CAPACITY

	MMWWF = 1 mgd	MMWWF = 10 mgd	MMWWF = 100 mgd
Average Annual Flow (mgd)	0.63	6.3	63
No. of Aeration Trains	2	4	16
No. of Membrane Tanks (N)	4	8	32
Peak Day Flow (mgd)	1.72	17.2	172
Peak Day Flux (gpd/ft^2)	20	20	20
Membrane Area (ft^2)	86,000	860,000	8,600,000
Area per Tank	21,500	107,500	268,750
No. of Membranes in operation (N-1)	3	7	31
MMWWF per train (mgd)	0.33	1.43	3.23
MMWWF Flux Rate (gpd/ft^2)	15.5	13.29	12

8.2 YEAR-ROUND NUTRIENT REMOVAL

Improvements required to provide year-round nutrient removal to achieve each treatment objective are described below. Process design data for all objectives are included in Table 8-4, which is attached at the end of this chapter.

8.2.1 Objective A

Because the existing system achieves Objective A (TIN <8 mg/L), no upgrades are required for this alternative. Operational changes should be performed if required to improve existing plant performance. Because no upgrade is required, the process flow schematic, process design data, recycled loads, sludge production, energy consumption, chemical usage and footprint requirements are all the same as for the existing MBR plant.