HYUNDAI HEAVY INDUSTRIES CO.,LTD.	**EcoBallast Ballast Water Management System**

4-3. Shipboard Test Report for EcoBallast-360

APPLICATION/PROJECT	Alternate Management System (AMS)
APPROVAL AUTHORITY	USCG
DOCUMENT NO.	Eco-04300-AMS
APPLICANT	Hyundai Heavy Industries Co., Ltd.
ISSUING PARTY	Engine & Machinery Research Institute / R&D Division

Rev.	Date	Reason for Issue	Prepared	Checked	Approved
0	30 Jul., 2013	Draft	T. J. Rhee	Y. G. Kim	K. N. Chung
1	30 Aug., 2013	First Issue	S. H. Yoon	Y. G. Kim	K. N. Chung
2					
3					
4					

시 험 성 적 서

Testing Certificate

Korea Marine Equipment Research Institute

(재)한국조선해양기자재연구원
부산광역시 영도구 해양로 435 (우 606-806)
435 Haeyang-ro Yeongdo-gu 606-806 Busan
Korea Tel:+82-51-400-5000
Fax:+82-51-400-5091
http://www.komeri.re.kr

시험성적서 번호 :
Certificate No. :
KOMERI-0906-12T1477

시험확인 미검증 2013/07/23 12:41:47 KST 정부시험확인센터

■ 접수일자 : 2012. 10. 08
Date of Receipt

■ 접수번호 : 12T1477
Receipt No.

■ 신 청 자 : Hyundai Heavy Industries Co., Ltd.
Applicant

■ 주 소 : 1000 Bangeojinsunhwan-doro, Dong-gu, Ulsan, 682-792, Korea
Address

■ 시 료 명 : EcoBallast™ Ballast Water Management System
Name of Product

■ 모 델 : EcoBallast-720
Model

■ 일련번호 : Eco-2012-2
Serial No.

■ 시험규격 : The Provisional Regulation for Type Approval of Ballast Water Management System by the Ministry of Land, Transport and Maritime Affairs (PR. No. 2012-982, Annex 5 and Annex 6) and Guidelines for Approval of Ballast Water Management Systems (Res. MEPC. 174(58), Annex, PART 2, 2.2, 2.4 & Part 4)
Test Standard

■ 성적서 용도 : Type Approval (Shipboard test)
Purpose of Testing Certificate

■ 시험기간 : 2012. 10. 17 - 2013. 04. 22
Test Period

■ 시험환경 : 온도 (min. 26.3 °C, max. 29.2 °C), 습도 (min. 50.2 % R.H., max. 57.9 % R.H.)
Environment *Temperature* *Humidity*

■ 시험결과 : **Conformity**
Test Result

본 시험성적서의 시험결과는 신청인이 제공한 시험대상품에 한하며, 한국조선해양기자재연구원장의 사전 서면 승인 없이 성적서의 전부 또는 일부를 복사하여 사용할 수 없음.

The test results are valid only for the test sample(s) provided by the applicant, and cannot be reproduced in full or in part without the prior written consent of the KOMERI

2013. 07. 23

시험원 *Tested by* 성명 *Name*	이 은 *Eun Lee*	(서명)	기술책임자 *Technical Manager* 성명 *Name*	양 준 혁 *Jun-Hyuk Yang*	(서명)

(재)한국조선해양기자재연구원장 (인)

The President of Korea Marine Equipment Research Institute

TABLE OF CONTENTS

■ GENERAL ····· 3

1. SHIPBOARD TEST ····· 4
   1.1 TEST ENVIRONMENT ····· 4
   1.2 TEST STANDARD ····· 4
   1.3 TEST EQUIPMENT ····· 5
   1.4 TEST SET-UP ····· 6
   1.5 TEST PROCEDURE ····· 6
   1.6 TEST SCHEDULE ····· 6
   1.7 TEST RESULTS ····· 7

ATTACHMENT I. DRAWING ····· 9
ATTACHMENT II. PROCEDURE ON SHIPBOARD TEST ····· 10
ATTACHMENT III. TEST RESULT DETAILS ····· 11
ATTACHMENT IV. SPECIES LIST ····· 14

GENERAL

■ **MANUFACTURER** ☑ Same as the Applicant

Company Name : Hyundai Heavy Industries Co., Ltd.

Address : 1000 Bangeojinsunhwan-doro, Dong-gu, Ulsan, 682-792, Korea

■ **ADDITIONAL TEST INFORMATION**

Treatment Rated Capacity : 720 m^3/h

■ **TEST SUMMARY**

Test Item	Test Standard	Result
Ballast Water Management System (SHIPBOARD TEST)	The Provisional Regulation for Type Approval of Ballast Water Management System by the Ministry of Land, Transport and Maritime Affairs (PR. No. 2012-982, Annex 5 and Annex 6) and Guidelines for Approval of Ballast Water Management Systems (Res. MEPC. 174(58), Annex, PART 2, 2.2, 2.4 & Part 4)	Conformity

1. SHIPBOARD TEST

1.1 TEST ENVIRONMENT

· Ambient temperature min. 26.3 °C, max. 29.2 °C

· Relative Humidity min. 50.2 % R.H., max. 57.9 % R.H.

1.2 TEST STANDARD

· Test standards are The Provisional Regulation for Type Approval of Ballast Water Management System by the Ministry of Land, Transport and Maritime Affairs (PR. No. 2012-982, Annex 5 and Annex 6) and Guidelines for Approval of Ballast Water Management Systems (Res. MEPC. 174(58), Annex, PART 2, 2.2, 2.4 & PART 4). Details test methods are as below;

	Test Item	Test Method
◆	Water temperature	APHA Standard Method 2550:2012
◆	pH	APHA Standard Method 4500 H^+ B:2012
◆	ORP	APHA Standard Method 2580:2012
◆	Salinity	APHA Standard Method 2520 B:2012
◆	DO	ASTM Standard Method D888-09 C:2010
◆	Turbidity	APHA Standard Method 2130 B:2012
◆	TSS	Standard Method 2540 D:2005
◆	DOC/POC	ISO 8245:1999
◆	Viable organisms (≥ 50 μm)	Fleming & Coughlan, 1978[1], US EPA 600/R-10/146:2010[2], APHA Standard Method 10200 C:2012[3]
◆	Viable organisms (≥ 10 - 50 μm)	Anja et al., 2005[4], APHA Standard Method 10200 C:2012
◆	Heterotrophic bacteria	APHA Standard Method 9125:2012
◆	Coliform	APHA Standard Method 9222 B:2012
◆	*Escherichia coli*	US EPA 1603:2009
◆	Intestinal Enterococci	US EPA 1600:2009
◆	Toxicogenic *Vibrio cholerae* (O1, O139)	APHA Standard Method 9260 H:2012 and/or API 20E kit (BioMerieux, Inc.)

[1] Staining with Neutral Red
[2] Touch with the point of a fine dissecting needle
[3] Concentration techniques
[4] Fluorescence dyeing with 5-CFDA AM

1.3 TEST EQUIPMENT

	Description	Manufacturer	Model Number	Calibration Due
◆	Auto pipette	Labnet International, inc.	BP-10000	~ 2013. 12. 01
◆	Auto pipette	Labnet International, inc.	BP-1000	~ 2013. 12. 01
◆	Auto pipette	Labnet International, inc.	BP-200	~ 2013. 12. 01
◆	Bogorov counting chamber	DH Sci.	-	-
◆	Digital imaging	BAUMER	TDI DMC3	-
◆	Digital imaging	Olympus	JUJAK 5.5	-
◆	Filtration system	Nalgene	350 mL	-
◆	Fluorescent microscope	Olympus	CFX41-33FL	-
◆	Humidity Recorder	CENTER	342	~ 2013. 08. 17
◆	Mass cylinder	Witeg	100 mL	~ 2015. 06. 04
◆	Micro (Pasteur) pipette	Hilgenberg	31 501 02	-
◆	Multiprobe (Hydrolab)	Hach company	Hydrolab MS5	-
◆	Plankton net	SA Sci.	conical type 50 µm	-
◆	Portable cleanbooth	DS Tech.	-	-
◆	Potrable incubators	CAIS	KC2500	-
◆	Sedgewick-Rafter chamber	Pyser-SGI	-	-
◆	Standard sieve	Sefar	50 µm	-
◆	Stereo-microscope	Olympus	SZ40	-
◆	Turbidity meter	Hach company	2100 P	-
◆	Vacuum pump	THOMAS	1617-353 series	-

1.4 TEST SET-UP

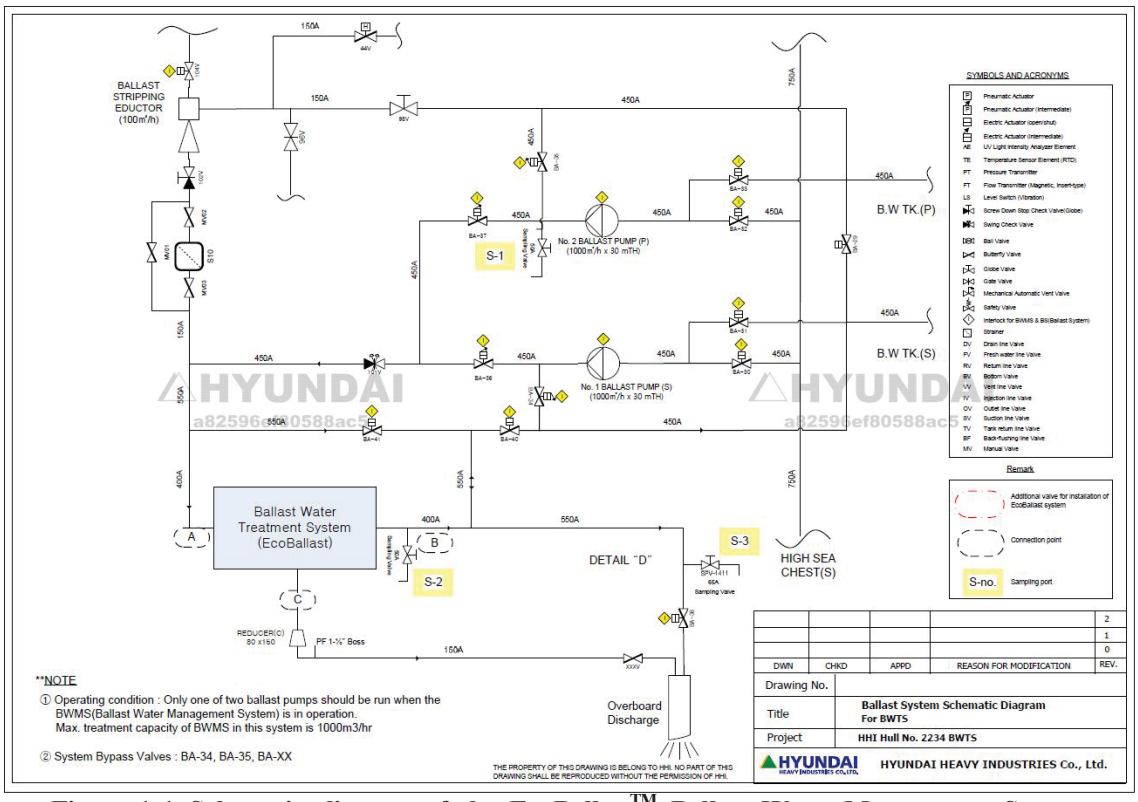

Figure 1-1 Schematic diagram of the EcoBallast™ Ballast Water Management System

1.5 TEST PROCEDURE

- See Appendix II. PROCEDURE ON SHIPBOARD TEST.

1.6 TEST SCHEDULE

Test cycle	Test schedule and location	
	Ballasting	de-Ballasting
1st	2012. 10. 17 Le havre port, France	2012. 10. 22 Algeciras port, Spain
2nd	2013. 02. 03 Hongkong port, China	2013. 02. 11 Busan new port, Korea
3rd	2013. 04. 16 Singapore port, Singapore	2013. 04. 22 Hongkong port, China

1.7 TEST RESULTS

1.7.1 Basic water parameter of source water

Test cycle	Temp. (°C)	pH	OPR (mV)	Salinity (PSU)	DO (mg/L)	Turbidity (NTU)	TSS (mg/L)	DOC* (mg/L)	POC* (mg/L)
1st	15.90	8.01	376	30.74	7.26	6.85	13.60	1.28	0.08
2nd	20.55	8.15	333	31.69	6.34	5.58	13.70	1.77	0.27
3rd	30.90	8.44	334	31.95	5.93	3.83	12.50	1.72	0.11

* The test was conducted by KTR.

1.7.2 Assessment of valid tests

(1) Viable organisms of influent water

Test cycle	≥ 50 μm organisms (inds./m^3)	≥ 10 - 50 μm organisms (inds./mL)	Remarks
1st	9 995	137	**Conformity**
2nd	5 678	180	**Conformity**
3rd	13 567	206	**Conformity**
Valid requirement	**> 100**	**> 100**	**-**

*Data indicates an arithmetic mean from 3 of samples (including beginning, middle and end).

(2) Viable organisms of discharge control water

Test cycle	≥ 50 μm organisms (inds./m^3)	≥ 10 - 50 μm organisms (inds./mL)	Remarks
1st	2 439	28	**Conformity**
2nd	366	12	**Conformity**
3rd	2 661	21	**Conformity**
Valid requirement	**> 10**	**> 10**	**-**

*Data indicates an arithmetic mean from 3 of samples (including beginning, middle and end).

1.7.3 Assessment of discharge treated water

Test cycle	≥ 50 μm organisms (inds./m^3)	≥ 10 - 50 μm organisms (inds./mL)	Bacteria (cfu/100 mL)			Remarks
			Escherichia coli	Intestinal Enterococci	Toxicogenic *Vibrio cholerae* (O1, O139)	
1st	1	0	0	0	0	**Conformity**
2nd	2	0	1	0	0	**Conformity**
3rd	3	1	0	0	0	**Conformity**
Discharge standard	**< 10**	**< 10**	**< 250**	**< 100**	**< 1**	**-**

*Data indicates an arithmetic mean from 9 of samples (including beginning × 3 , middle × 3 and end × 3).

ATTACHMENT

I. DRAWING

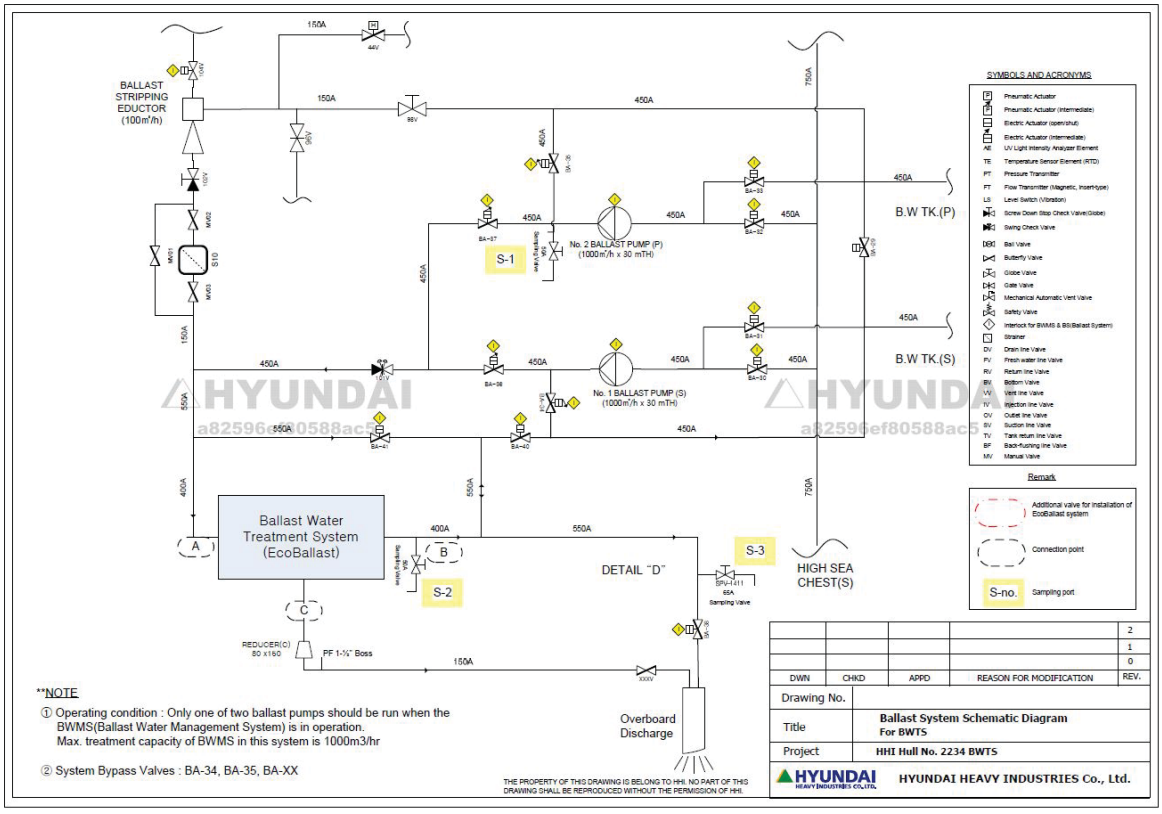

II. PROCEDURE ON SHIPBOARD TEST

KOMERI SOP BWMS 02
Rev. 2.0 May 2011

BWMS Test Procedure on Shipboard Test

The test cycles including invalid and unsuccessful test cycles are to span a trial period of not less than six months.

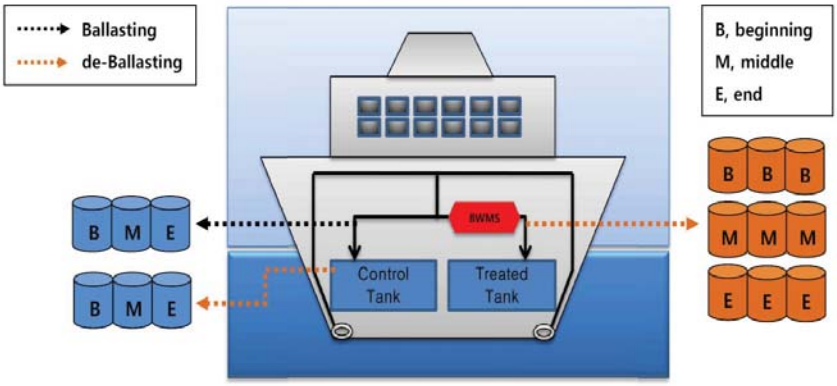

Sample volume			
Ballasting	Infleunt water	≥ 50 μm organisms	1 m³ × 3
		≥ 10-50 μm organisms	1 L × 3
		Bacteria	500 mL × 3
de-Ballasting	Discharge control water	≥ 50 μm organisms	1 m³ × 3
		≥ 10-50 μm organisms	1 L × 3
	Discharge Treated water	≥ 50 μm organisms	1 m³ × 9
		≥ 10-50 μm organisms	1 L × 9
		Bacteria	500 mL × 9

<Standard for valid test>

Ballasting		
Influent water	≥ 50 μm organisms	> 100 inds./m³
	≥ 10-50 μm organisms	> 100 inds./mL

de-Ballasting		
Discharge Control water	≥ 50 μm organisms	> 10 inds./m³
	≥ 10-50 μm organisms	> 10 inds./mL
Discharge Treated water	≥ 50 μm organisms	< 10 inds./m³
	≥ 10-50 μm organisms	< 10 inds./mL
	Toxicogenic *Vibrio cholerae* (O1, O139)	< 1 cfu/100 mL
	Escherichia coil	< 250 cfu/100 mL
	Intestinal Enterococci	< 100 cfu/100 mL

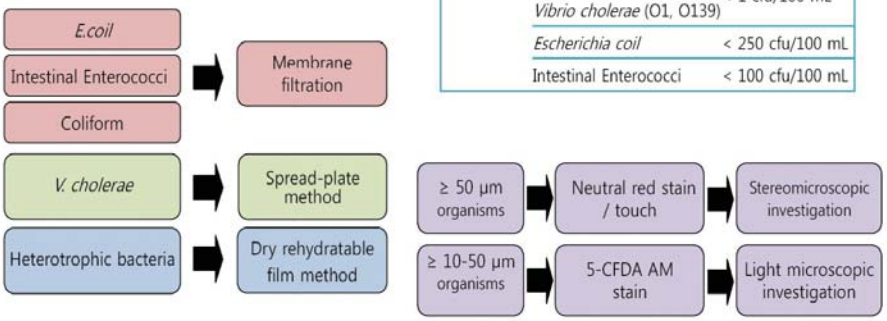

III. TEST RESULT DETAILS

· Ballasting (1st cycle : 2012. 10. 17)

Test Item		Ballasting			
		Source water	Influent water		
			Beginning	Middle	End
Water temperature (°C)		15.90	15.30	15.38	15.46
pH		8.01	8.14	8.21	8.21
ORP (mV)		376	353	344	335
Salinity (PSU)		30.74	29.65	29.72	30.12
DO (mg/L)		7.26	7.86	7.76	7.68
Turbidity (NTU)		6.85	6.97	6.77	6.80
TSS (mg/L)		13.6	-	-	-
DOC (mg/L)		1.28	-	-	-
POC (mg/L)		0.08	-	-	-
≥ 50 μm organisms (inds./m^3)		-	15 833	8 033	6 117
≥ 10 - 50 μm organisms (inds./mL)		-	141	142	128
Heterotrophic bacteria (cells/mL)		-	TNTC[a]	TNTC	TNTC
Bacteria (cfu/100 mL)	Coliform	-	TNTC	TNTC	TNTC
	Escherichia coli	-	24	20	22
	Intestinal Enterococci	-	35	75	49
	Toxicogenic *Vibrio cholerae* (O1, O139)	-	0	0	0

[a]Too Numerous To Count

· de-Ballasting (1st cycle : 2012. 10. 22)

Test Item		de-Ballasting											
		Discharge control water			Discharge treated water								
		B[a]	M[b]	E[c]	B1[d]	B2[e]	B3[f]	M1	M2	M3	E1	E2	E3
Water temperature (°C)		20.51	20.48	20.51	21.80	21.04	20.87	20.82	20.92	20.78	20.79	20.75	20.75
pH		8.23	8.22	8.23	8.18	8.14	8.15	8.17	8.17	8.15	8.17	8.18	8.19
ORP (mV)		271	270	268	373	331	315	306	298	294	289	286	284
Salinity (PSU)		30.26	30.25	30.27	29.49	30.45	30.56	30.53	30.51	30.57	30.56	30.56	30.57
DO (mg/L)		7.23	7.32	7.36	7.31	7.43	7.29	7.34	7.13	7.44	7.17	7.26	7.12
Turbidity (NTU)		1.43	2.04	1.59	4.12	3.36	1.73	1.73	1.07	0.95	0.91	1.10	1.14
≥ 50 μm organisms (inds./m^3)		2 650	2 650	2 017	1	0	2	0	1	1	0	1	2
≥ 10 - 50 μm organisms (inds./mL)		22	32	29	0	0	0	0	0	0	0	0	0
Heterotrophic bacteria (cells/mL)		-	-	-	38	1	0	0	0	0	0	0	0
Bacteria (cfu/100 mL)	Coliform	-	-	-	0	0	0	0	0	0	0	0	0
	Escherichia coli	-	-	-	0	0	0	0	0	0	0	0	0
	Intestinal Enterococci	-	-	-	0	0	0	0	0	0	0	0	0
	Toxicogenic *Vibrio cholerae* (O1, O139)	-	-	-	0	0	0	0	0	0	0	0	0

[a]Beginning, [b]Middle, [c]End, [d]Begining of beginning, [e]Middle of beginning, [f]End of beginning,

III. To be contiuned

· Ballasting (2nd cycle : 2013. 02. 03)

Test Item		Ballasting			
		Source water	Influent water		
			Beginning	Middle	End
Water temperature (°C)		20.55	20.66	19.60	19.33
pH		8.15	8.27	8.29	8.30
ORP (mV)		333	145	146	150
Salinity (PSU)		31.69	31.61	31.52	31.49
DO (mg/L)		6.34	6.43	6.78	6.89
Turbidity (NTU)		5.58	4.65	4.26	4.47
TSS (mg/L)		13.7	-	-	-
DOC (mg/L)		1.77	-	-	-
POC (mg/L)		0.27	-	-	-
≥ 50 μm organisms (inds./m^3)		-	6 283	5 817	4 933
≥ 10 - 50 μm organisms (inds./mL)		-	174	174	191
Heterotrophic bacteria (cells/mL)		-	TNTC[a]	TNTC	TNTC
Bacteria (cfu/100 mL)	Coliform	-	0	0	0
	Escherichia coli	-	TNTC	TNTC	TNTC
	Intestinal Enterococci	-	64	55	62
	Toxicogenic *Vibrio cholerae* (O1, O139)	-	0	0	0

[a]Too Numerous To Count

· de-Ballasting (2nd cycle : 2013. 02. 11)

Test Item		de-Ballasting											
		Discharge control water			Discharge treated water								
		B[a]	M[b]	E[c]	B1[d]	B2[e]	B3[f]	M1	M2	M3	E1	E2	E3
Water temperature (°C)		9.48	9.64	9.52	11.45	9.71	9.82	9.84	9.74	9.70	9.68	9.68	9.47
pH		8.57	8.45	8.50	8.30	8.15	8.45	8.58	8.63	8.46	8.47	8.46	8.49
ORP (mV)		286	285	284	327	319	316	311	308	305	301	299	296
Salinity (PSU)		31.51	31.49	31.48	31.40	31.42	31.43	31.41	31.43	31.43	31.44	31.45	31.46
DO (mg/L)		7.81	7.87	7.94	7.64	7.75	7.77	7.88	7.68	7.62	7.73	7.90	7.78
Turbidity (NTU)		0.91	0.75	0.81	2.13	2.14	1.54	1.64	1.63	1.65	1.77	2.06	2.13
≥ 50 μm organisms (inds./m^3)		243	297	557	0	1	2	2	1	1	1	2	2
≥ 10 - 50 μm organisms (inds./mL)		14	11	9	0	0	0	0	0	0	0	0	0
Heterotrophic bacteria (cells/mL)		-	-	-	0	1	0	0	0	1	0	1	2
Bacteria (cfu/100 mL)	Coliform	-	-	-	0	0	0	0	1	0	0	0	0
	Escherichia coli	-	-	-	0	0	0	0	0	0	0	0	0
	Intestinal Enterococci	-	-	-	0	0	0	0	0	0	0	0	0
	Toxicogenic *Vibrio cholerae* (O1, O139)	-	-	-	0	0	0	0	0	0	0	0	0

[a]Beginning, [b]Middle, [c]End, [d]Begining of beginning, [e]Middle of beginning, [f]End of beginning

III. To be contiuned

· Ballasting (3rd cycle : 2013. 04. 16)

Test Item		Ballasting			
		Source water	Influent water		
			Beginning	Middle	End
Water temperature (°C)		30.90	30.55	30.43	30.47
pH		8.44	8.44	8.45	8.46
ORP (mV)		334	305	289	276
Salinity (PSU)		31.95	31.79	31.73	31.72
DO (mg/L)		5.93	5.98	5.99	5.91
Turbidity (NTU)		3.83	4.55	5.09	5.44
TSS (mg/L)		12.5	-	-	-
DOC (mg/L)		1.70	-	-	-
POC (mg/L)		0.10	-	-	-
≥ 50 μm organisms (inds./m^3)		-	19 950	12 500	8 250
≥ 10 - 50 μm organisms (inds./mL)		-	199	201	218
Heterotrophic bacteria (cells/mL)		-	TNTC[a]	TNTC	TNTC
Bacteria (cfu/100 mL)	Coliform	-	9	12	12
	Escherichia coli	-	7	10	9
	Intestinal Enterococci	-	2	2	4
	Toxicogenic *Vibrio cholerae* (O1, O139)	-	0	0	0

[a]Too Numerous To Count

· de-Ballasting (3rd cycle : 2013. 04. 22)

Test Item		de-Ballasting											
		Discharge control water			Discharge treated water								
		B[a]	M[b]	E[c]	B1[d]	B2[e]	B3[f]	M1	M2	M3	E1	E2	E3
Water temperature (°C)		23.52	23.60	23.56	23.73	23.87	23.87	23.72	23.80	23.79	23.70	23.83	23.67
pH		8.44	8.44	8.46	8.38	8.42	8.44	8.45	8.45	8.46	8.46	8.46	8.47
ORP (mV)		158	160	162	348	265	232	204	182	178	172	166	166
Salinity (PSU)		29.42	29.41	29.42	30.69	30.63	30.61	30.61	30.61	30.60	30.60	30.59	30.59
DO (mg/L)		4.90	5.21	5.08	5.74	5.56	5.49	5.34	5.50	5.33	5.50	5.48	5.65
Turbidity (NTU)		0.90	1.13	0.96	2.30	1.57	1.41	1.23	1.32	1.18	1.38	1.18	1.10
≥ 50 μm organisms (inds./m^3)		3 100	2 150	2 733	0	3	2	5	2	3	3	3	4
≥ 10 - 50 μm organisms (inds./mL)		25	21	16	0	1	0	0	0	0	0	0	0
Heterotrophic bacteria (cells/mL)		-	-	-	0	0	0	0	0	0	0	0	0
Bacteria (cfu/100 mL)	Coliform	-	-	-	0	0	0	0	0	0	0	0	0
	Escherichia coli	-	-	-	0	0	0	0	0	0	0	0	0
	Intestinal Enterococci	-	-	-	0	0	0	0	0	0	0	0	0
	Toxicogenic *Vibrio cholerae* (O1, O139)	-	-	-	0	0	0	0	0	0	0	0	0

[a]Beginning, [b]Middle, [c]End, [d]Begining of beginning, [e]Middle of beginning, [f]End of beginning

IV. SPECIES LIST

1. ≥ 50 μm organisms

- **Ballasting (1st cycle : 2012. 10. 17)**

Phylum/Division	Order	Genus/Species
Protozoa	Tintinnida	*Tintinnopsis* sp.
Arthropoda	Calanoida	*Acartia omorii*
		Paracalanus sp.
	Cyclopoida	*Oithona* sp.
	Harpacticoida	-
	Sessilia	Balanus larva
	Calanoida copepodite	-
	Copepod nauplius	-
	Cyclopoida copepodite	-
Annelida	Polychaeta larva	-

- **de-Ballasting (1st cycle : 2012. 10. 22)**

Phylum/Division	Order	Genus/Species
Discharge control water		
Protozoa	Tintinnida	*Tintinnopsis* sp.
Arthropoda	Calanoida	*Acartia omorii*
		Paracalanus sp.
	Harpacticoida	-
	Sessilia	Balanus larva
	Calanoida copepodite	-
	Copepod nauplius	-
	Calanoida copepodite	-
Annelida	Polychaeta larva	-
Discharge treated water		
Arthropoda	Sessilia	Balanus larva
		Cyprid larva
	Harpacticoida	-
Annelida	Polychaeta larva	-

1. To be continued

- **Ballasting (2nd cycle : 2013. 02. 03)**

Phylum/Division	Order	Genus/Species
Protozoa	Tintinnida	*Tintinnopsis* sp.
Arthropoda	Calananoida	*Centropages abdominalis*
		Paracalanus sp.
	Cyclopoida	*Oithona* sp.
	Poecilostomatoida	*Corycaeus affinis*
	Harpacticoida	-
	Sessilia	Balanus larva
	Calanoida copepodite	-
	Copepod nauplius	-
Annelida	Polychaeta larva	-
Mollusca	Bivalve larva	-
Chaetognatha	Aphragmophora	*Sagitta* sp.

- **de-Ballasting (2nd cycle : 2013. 02. 11)**

Phylum/Division	Order	Genus/Species
Discharge control water		
Protozoa	Tintinnida	*Tintinnopsis* sp.
Arthropoda	Calanoida	*Paracalanus* sp.
		Centropages abdominalis
	Cyclopoida	*Oithona* sp.
	Poecilostomatoida	*Corycaeus affinis*
	Calanoida copepodite	-
	Copepod nauplius	-
Annelida	Polychaeta larva	-
Mollusca	Bivalve larva	-
Platyhelminthes	Turbellarian	Műller's larva
Discharge treated water		
Arthropoda	Calanoida	*Paracalanus* sp.
	Harpacticoida	-
	Sessilia	Cyprid larva
	Calanoida copepodite	
Annelida	Polychaeta larva	-

1. To be continued

- **Ballasting (3rd cycle : 2013. 04. 16)**

Phylum/Division	Order	Genus/Species
Protozoa	Tintinnida	*Tintinnopsis* sp.
Arthropoda	Calanoida	*Acartia omorii*
		Centropages abdominalis
		Paracalanus sp.
	Cyclopoida	*Oithona* sp.
	Poecilostomatoida	*Corycaeus affinis*
	Harpacticoida	-
	Sessilia	Balanus larva
		Cyprid larva
	Calanoida copepodite	-
	Copepod nauplius	-
	Decapoda	-
Annelida	Polychaeta larva	-
Mollusca	Bivalve larva	-
	Gastropod larva	-
Platyhelminthes	Turbellarian	Műller's larva

- **de-Ballasting (3rd cycle : 2013. 04. 22)**

Phylum/Division	Order	Genus/Species
Discharge control water		
Arthropoda	Calanoida	*Acartia omorii*
		Paracalanus sp.
	Cyclopoida	*Oithona* sp.
	Poecilostomatoida	*Corycaeus affinis*
	Harpacticoida	-
	Calanoida copepodite	-
	Copepod nauplius	-
	Sessilia	Cyprid larva
Annelida	Polychaeta larva	-
Mollusca	Bivalve larva	-
Platyhelminthes	Turbellarian	Műller's larva
Chaetognatha	Aphragmophora	*Sagitta* sp.
Discharge treated water		
Arthropoda	Poecilostomatoida	*Corycaeus affinis*
	Harpacticoida	-
	Sessilia	Balanus larva
		Cyprid larva
Annelida	Polychaeta larva	-
Chaetognatha	Aphragmophora	*Sagitta* sp.

2. ≥ 10 - 50 μm organisms

- **Ballasting (1st cycle : 2012. 10. 17)**

Phylum/Division	Order	Genus/Species
Bacillariophyta	Thalassiosirales	*Thalassiosira* sp.
	Coscinodiscales	*Actinoptychus* sp.
	Lithodesmidales	*Ditylum sol*
	Triceratiales	*Odontella aurita*
Dinophyta	Peridiniales	*Scrippsiella* sp.
		Heterocapsa sp.
		Protoperidinium sp.
	Dinophysiales	*Dinophysis* sp.
	Prorocetrales	*Prorocentrum micans*
Unidentified species		

- **de-Ballasting (1st cycle : 2012. 10. 22)**

Phylum/Division	Order	Genus/Species
Discharge control water		
Bacillariophyta	Thalassiosirales	*Thalassiosira* sp.
	Naviculales	*Pinnularia* sp.
Dinophyta	Prorocetrales	*Prorocentrum micans*
	Oxyrrhinales	*Oxyrrhis marina*
	Gymnodiniales	*Gyrodinium* sp.
Protozoa		

- **Ballasting (2nd cycle : 2013. 02. 03)**

Phylum/Division	Order	Genus/Species
Bacillariophyta	Thalassiosirales	*Thalassiosira* sp.
		Detonula sp.
	Rhizosoleniales	*Guinardia* sp.
	Chaetocerotales	*Chatoceros* sp.
	Naviculales	*Pinnularia* sp.
Dinophyta	Peridiniales	*Ceratium furca*
		Ceratium fusus
		Protoperidinium sp.
Protozoa		
Unidentified species		

- **de-Ballasting (2nd cycle : 2013. 02. 11)**

Phylum/Division	Order	Genus/Species
Discharge control water		
Bacillariophyta	Thalassiosirales	*Detonula* sp.
Dinophyta	Oxyrrhinales	*Oxyrrhis marina*
Protozoa		
Unidentified species		

2. To be continued

- **Ballasting (3rd cycle : 2013. 04. 16)**

Phylum/Division	Order	Genus/Species
Bacillariophyta	Thalassiosirales	*Skeletonema costatum*
		Thalassiosira sp.
	Hemiaulales	*Eucampia zodiacus*
	Chaetocerotales	*Chaetoceros* sp.
	Triceratiales	*Odontella aurita*
	Lithodesmidales	*Ditylum sol*
	Naviculales	*Pinnularia* sp.
Dinophyta	Gymnodiniales	*Gyrodinium* sp.
Protozoa		
Unidentified species		

- **de-Ballasting (3rd cycle : 2013. 04. 22)**

Phylum/Division	Order	Genus/Species
Discharge control water		
Bacillariophyta	Thalassiosirales	*Skeletonema costatum*
		Thalassiosira sp.
	Chaetocerotales	*Chaetoceros* sp.
	Paraliales	*Paralia* sp.
	Naviculales	*Pleurosigma* sp.
Protozoa		
Discharge treated water		
Bacillariophyta	Thalassiosirales	*Cyclotella* sp.