HYUNDAI HEAVY INDUSTRIES CO.,LTD.	**EcoBallast Ballast Water Management System**

3-4. Land-based Test Report for EcoBallast-360

APPLICATION/PROJECT	Alternate Management System (AMS)
APPROVAL AUTHORITY	USCG
DOCUMENT NO.	Eco-03400-AMS
APPLICANT	Hyundai Heavy Industries Co., Ltd.
ISSUING PARTY	Engine & Machinery Research Institute / R&D Division

Rev.	Date	Reason for Issue	Prepared	Checked	Approved
0	25 Jul., 2013	Draft	T. J. Rhee	Y. G. Kim	K. N. Chung
1	25 Aug., 2013	First Issue	S. H. Yoon	Y. G. Kim	K. N. Chung
2					
3					
4					

시 험 성 적 서

Testing Certificate

Korea Marine Equipment Research Institute

(재)한국조선해양기자재연구원
부산광역시 영도구 해양로 435 (우 606-806)
435 Haeyang-ro Yeongdo-gu 606-806 Busan Korea
Tel:+82-51-400-5000 Fax:+82-51-400-5091
http://www.komeri.re.kr

시험성적서 번호
Certificate No. :
KOMERI-0906-12T822-2

■ 접수일자 : 2012. 06. 08
Date of Receipt

■ 접수번호 : 12T822
Receipt No.

■ 신 청 자 : Hyundai Heavy Industries Co., Ltd.
Applicant

■ 주 소 : 1000 Bangeojinsunhwan-doro, Dong-Gu, Ulsan, Korea
Address

■ 시 료 명 : EcoBallast™ Ballast Water Management System
Name of Product

■ 모 델 : EcoBallast-360
Model

■ 일련번호 : Eco-2012-1
Serial No.

■ 시험규격 : The Provisional Regulation for Type Approval of Ballast Water Management System by the Ministry of Land, Transport and Maritime Affairs (PR. No. 2012-982, Annex 4 and Annex 6) and Guidelines for Approval of Ballast Water Management Systems (Res. MEPC. 174(58), Annex, PART 2, 2.3, 2.4 & Part 4)
Test Standard

■ 성적서 용도 : Type Approval (Land-based Test)
Purpose of Testing Certificate

■ 시험기간 : 2012. 07. 19 ~ 2012. 10. 03
Test Period

■ 시험환경 : 온도 (min. 14.4°C, max. 28.8 °C), 습도 (min. 38.0 % R.H., max. 66.3 % R.H.)
Environment Temperature Humidity

■ 시험결과 : **Conformity**
Test Result

본 시험성적서의 시험결과는 신청인이 제공한 시험대상품에 한하며, 한국조선해양기자재연구원장의 사전 서면 승인 없이 성적서의 전부 또는 일부를 복사하여 사용할 수 없음.
The test results are valid only for the test sample(s) provided by the applicant, and cannot be reproduced in full or in part without the prior written consent of the KOMERI

* 본 시험성적서는 제 KOMERI-0906-12T822-1호의 대체문서 임.
* This document is substitute for certificate No. KOMERI-0906-12T822-1.

2017. 07. 23

시험원 *Tested by* 성명 *Name*	박 형 민 *Hyung-Min Park*	(서명)	기술책임자 *Technical Manager* 성명 *Name*	양 준 혁 *Jun-Hyuk Yang*	(서명)

(재)한국조선해양기자재연구원장 (인)

The President of Korea Marine Equipment Research Institute

TABLE OF CONTENTS

■ GENERAL ····· 3

1. LAND-BASED TEST ····· 4

ATTACHMENT I. DRAWING ····· 10
ATTACHMENT II. PROCEDURE OF LAND-BASED TEST ····· 11
ATTACHMENT III. ORGANISMS DIVERSITY IN THE TEST WATER ····· 12
ATTACHMENT IV. TEST RESULT DETAILS ····· 22
ATTACHMENT V. ANALYZED SAMPLE PICTURES ····· 27

GENERAL

■ **MANUFACTURER** ☑ Same as the Applicant

Company Name : Hyundai Heavy Industries Co., Ltd.

Address : 1000 Bangeojinsunhwan-doro, Dong-Gu, Ulsan, Korea

■ **ADDITIONAL TEST INFORMATION**

Treatment Rated Capacity : 360 m^3/h

Rated : AC 440 V, 60 Hz

■ **TEST SUMMARY**

No.	Test Item	Test Standard	Result
1	Land-based test	The Provisional Regulation for Type Approval of Ballast Water Management System' by the Ministry of Land, Transport and Maritime Affairs (PR. No. 2012-982, Annex 4 and Annex 6) and Guidelines for Approval of Ballast Water Management Systems (Res. MEPC. 174(58), Annex, PART 2, 2.3, 2.4 & Part 4)	Conformity

1. LAND-BASED TEST

1.1 TEST ENVIRONMENT

· Ambient temperature min 14.4 ˚C, max 28.8 ˚C

· Relative Humidity min 38.0 % R.H., max 66.3 % R.H.

1.2 TEST STANDARD

· Test standards are 'The Provisional Regulation of Type Approval of Ballast Water Management System' by the Ministry of Land, Transport and Maritime Affairs (PR. No. 2012-982, Annex 4 & Annex 6) and Guidelines for Approval of Ballast Water Management Systems (Res. MEPC. 174(58), Annex, PART 2, 2.3, 2.4 & Part 4)

	Test Item	Test standard	Remark
◆	Water temperature	APHA Standard Method 2550:2012	Measurement with Electrode multiprobe (Hydrolab, USA)
◆	pH	APHA Standard Method 4500 H^+ B:2012	
◆	ORP	APHA Standard Method 2580:2012	
◆	Salinity	APHA Standard Method 2520 B:2012	
◆	DO	ASTM Standard Method D888-09 C:2010	
◆	Turbidity	APHA Standard Method 2130 B:2012	Measurement with Turbidity meter (Hach, 2100 P)
◆	TSS	APHA Standard Method 2540 D:2012	-
◆	DOC/POC	ISO 8245:1999	-
◆	Viable organisms (≥ 50 μm)	Fleming & Coughlan, 1978, US EPA 600/R-10/146:2010, APHA Standard Method 10200 C:2012	Staining with Neutral Red, Touch with the point of a fine dissecting needle, Concentration techniques
◆	Viable organisms (≥ 10 - 50 μm)	Anja et al., 2005, APHA Standard Method 10200 C:2012	Fluorescence dyeing with 5-CFDA AM, Concentration techniques
◆	Heterotrophic bacteria	APHA Standard Method 9215:2012	-
◆	Coliform	APHA Standard Method 9222 B:2012	-
◆	*Escherichia coli*	US EPA 1603:2009	-
◆	Intestinal Enterococci	US EPA 1600:2009	-
◆	Toxicogenic *Vibrio cholerae* (O1, O139)	APHA Standard Method 9260 H:2012 and/or API 20E kit (BioMerieux, Inc.)	-

1.3 TEST EQUIPMENT

	Description	Manufacturer	Model Number	Calibration Due
◆	Fluorescent microscope	Olympus	CFX41-33FL	-
◆	Sedgewick-Rafter chamber	Pyser-SGI	-	-
◆	Stereo-microscope	Olympus	SZ40	-
◆	Bogorov counting chamber	DH Sci.	-	-
◆	Multiprobe (Hydrolab)	Hach company	Hydrolab MS5	-
◆	Clean bench	SY Sci.	SH-150S	-
◆	Turbidity meter	Hach company	2100 P	-
◆	Digital imaging	BAUMER	TDI DMC3	-
◆	Digital imaging	Olympus	JUJAK 5.5	-
◆	Standard sieve	Sefar	30 µm	-
◆	Standard sieve	Sefar	10 µm	-
◆	Plankton net	SA Sci.	conical type (30 µm)	-
◆	Plankton net	SA Sci.	conical type (10 µm)	-
◆	Auto pipette	Labnet International, inc.	BP-10000	~ 2012. 12. 06
◆	Auto pipette	Labnet International, inc.	BP-1000	~ 2012. 12. 06
◆	Auto pipette	Labnet International, inc.	BP-200	~ 2012. 12. 06
◆	Micro (Pasteur) pipette	Hilgenberg	31 501 02	-
◆	Filtration system	Nalgene	350 mL	-
◆	Vacuum pump	THOMAS	1617-353 series	-
◆	Mass cylinder	Witeg	100 mL	~ 2015. 06. 04
◆	Incubators	DH Sci.	WIG-155	~ 2012. 12. 07
◆	Drying and heating oven	DH Sci.	WON-105	~ 2012. 12. 07
◆	Electronic balance	OHAUS	Pioneer™ Balances	~ 2012. 12. 06
◆	Colony counter	SUNTEX	570	-
◆	Autoclave	DH Sci.	WAC-60	~ 2012. 12. 07
◆	Humidity Recorder	CENTER	342	~ 2013. 08. 05

1.4 TEST SET-UP

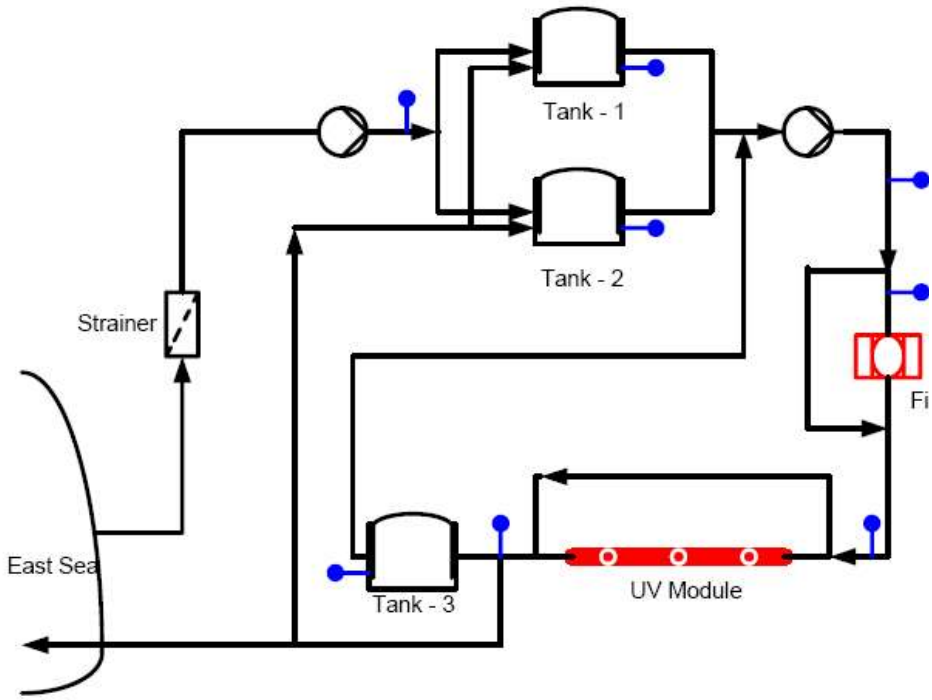

Figure 1-1 Test diagram of EcoBallast™ Ballast Water Management System

1.5 TEST PROCEDURE

· See Attachment Ⅱ. PROCEDURES OF LAND-BASED TEST.

1.6 TEST SCHEDULE

Period	Cycle	Test mode and date		Location
		Ballasting	de-Ballasting	
1 (> 32 PSU)	5	2012. 08. 09	2012. 08. 14	Hyundai Heavy Industry, Ulsan
	6	2012. 08. 16	2012. 08. 21	
	7	2012. 08. 23	2012. 08. 29	
	8	2012. 08. 30	2012. 09. 04	
	9	2012. 09. 06	2012. 09. 11	
2 (3 - 32 PSU)	3	2012. 07. 19	2012. 07. 24	
	4	2012. 07. 26	2012. 07. 31	
	10	2012. 09. 13	2012. 09. 18	
	11	2012. 09. 20	2012. 09. 25	
	12	2012. 09. 27	2012. 10. 03	

1.7 TEST RESULTS

1.7.1 Assessment of valid test

(1) Basic water parameter of test (challenge) water

Period	Cycle	Salinity (PSU)	TSS (mg/L)	DOC (mg/L)	POC (mg/L)	Remarks
1 (> 32 PSU)	5	32.16	20.90	3.34	1.49	Conformity
	6	32.34	20.00	3.01	1.38	
	7	33.25	23.50	3.07	1.79	
	8	33.16	22.00	2.85	2.05	
	9	32.30	16.50	3.08	1.90	
Valid requirement		**> 32**	**> 1**	**> 1**	**> 1**	**-**
2 (3- 32 PSU)	3	18.05	75.30	7.45	18.33	Conformity
	4	18.92	68.30	7.44	19.06	
	10	18.23	79.70	6.51	13.84	
	11	18.54	96.50	6.22	16.55	
	12	17.76	97.00	6.33	12.64	
Valid requirement		**3 - 32**	**> 50**	**> 5**	**> 5**	**-**

※ Data indicates an arithmetic mean from triplicate.

(2) Viable organisms of test (challenge) water

Period	Cycle	≥ 50 µm organisms (inds./m^3)	≥ 10 - 50 µm organisms (inds./mL)	Heterotrophic bacteria (cells/mL)	Remarks
1 (> 32 PSU)	5	151 834	2 466	16 773	Conformity
	6	242 834	1 145	10 319	
	7	351 167	1 348	20 773	
	8	281 167	1 243	19 955	
	9	204 000	1 215	30 955	
2 (3 - 32 PSU)	3	193 000	1 944	21 200	
	4	157 667	1 350	34 334	
	10	412 167	1 234	44 091	
	11	272 667	1 079	47 090	
	12	387 000	1 288	25 364	
Valid requirement		**≥ 100 000**	**≥ 1 000**	**≥ 10 000**	**-**

※ Data indicates an arithmetic mean from triplicate.

(3) Organisms diversity of test (challenge) water

Period	Cycle	≥ 50 μm organisms	≥ 10 - 50 μm organisms	Remarks
1 (> 32 PSU)	5	6 Phyla/Division 11 species	3 Phyla/Division 6 species	Conformity
	6	6 Phyla/Division 15 species	3 Phyla/Division 7 species	
	7	4 Phyla/Division 12 species	4 Phyla/Division 7 species	
	8	5 Phyla/Division 10 species	4 Phyla/Division 7 species	
	9	4 Phyla/Division 10 species	4 Phyla/Division 9 species	
2 (3 - 32 PSU)	3	5 Phyla/Division 9 species	3 Phyla/Division 8 species	
	4	6 Phyla/Division 13 species	3 Phyla/Division 7 species	
	10	5 Phyla/Division 9 species	4 Phyla/Division 9 species	
	11	4 Phyla/Division 9 species	4 Phyla/Division 7 species	
	12	4 Phyla/Division 10 species	4 Phyla/Division 8 species	
Valid requirement		**≥ 3 Phyla/Division 5 species**	**≥ 3 Phyla/Division 5 species**	**-**

(4) Viable organisms of discharge control water

Period	Cycle	≥ 50 μm organisms (inds./m^3)	≥ 10 - 50 μm organisms (inds./mL)	Remarks
1 (> 32 PSU)	5	1 251	470	Conformity
	6	6 528	258	
	7	7 390	134	
	8	6 529	275	
	9	7 389	102	
2 (3 - 32 PSU)	3	100 890	364	
	4	1 334	206	
	10	17 445	155	
	11	9 890	161	
	12	806	154	
Valid requirement		**> 100**	**> 100**	**-**

※ Data indicates an arithmetic mean from triplicate.

1.7.2 Assessment of discharge treated water

Period	Cycle	≥ 50 μm organisms (inds./m^3)	≥ 10 - 50 μm organisms (inds./mL)	Bacteria (CFU/100 mL)			Remarks
				Escherichia coli	Intestinal Enterococci	Toxicogenic *Vibrio cholerae* (O1, O139)	
1 (> 32 PSU)	5	0	1	3	1	0	Conformity
	6	0	1	20	1	0	
	7	0	0	34	0	0	
	8	0	1	5	1	0	
	9	0	1	1	0	0	
2 (3 - 32 PSU)	3	0	0	2	1	0	
	4	0	1	6	1	0	
	10	0	1	7	1	0	
	11	0	1	1	0	0	
	12	0	1	2	0	0	
Discharge standard		**< 10**	**< 10**	**< 250**	**< 100**	**< 1**	**-**

※ Data indicates an arithmetic mean.

ATTACHMENT

I. DRAWING

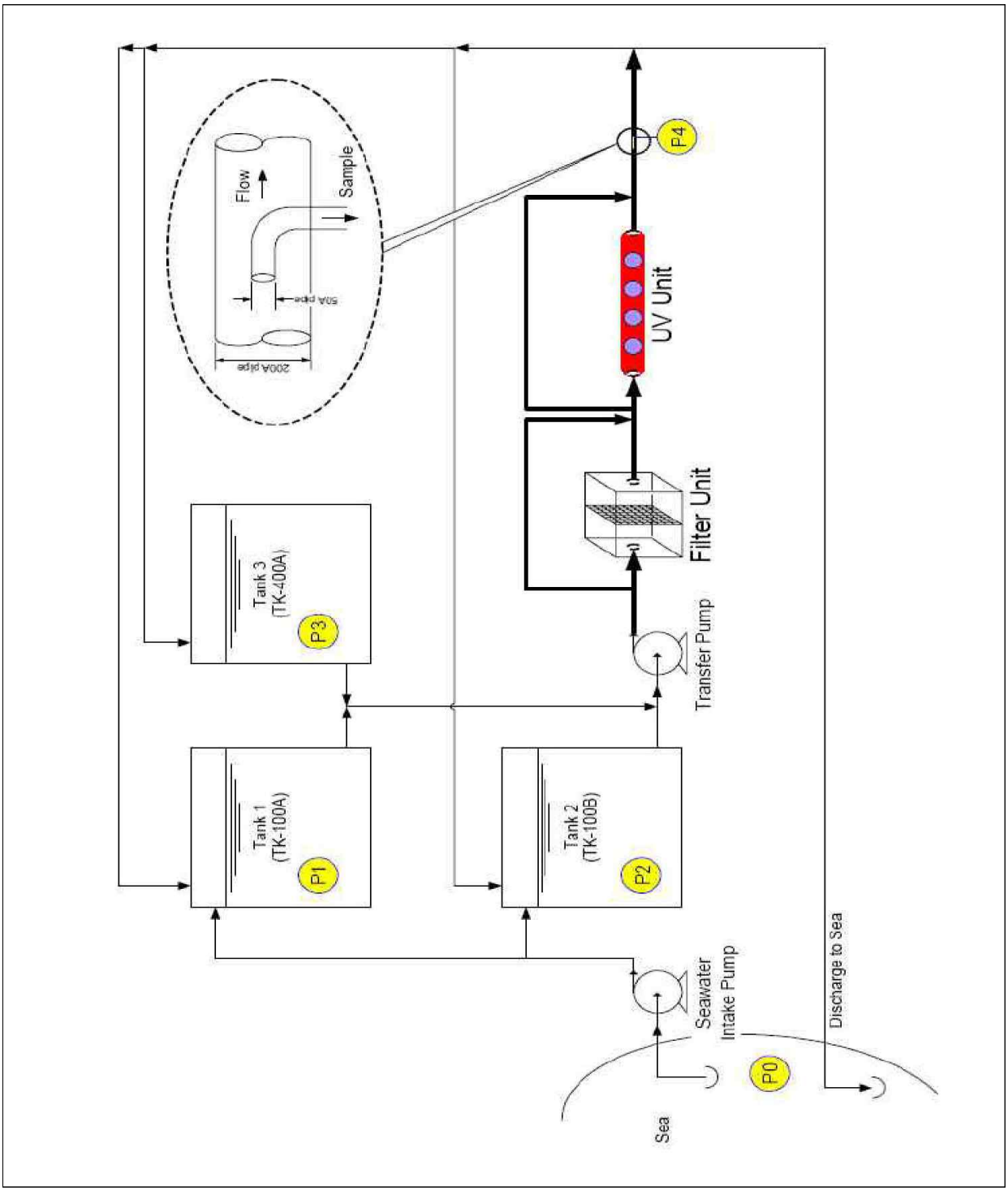

II. PROCEDURE OF LAND-BASED TEST

KOMERI SOP BWMS 01
Rev. 3.0 May 2011

BWMS Test Procedures of Land-Based Test

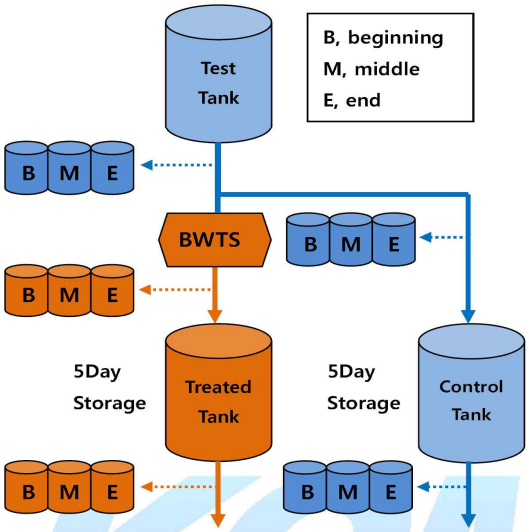

<Standard for valid test>

Salinity in the test water			
	> 32 PSU	3-32 PSU	< 3 PSU
DOC	> 1 mg/L	> 5 mg/L	> 5 mg/L
POC	> 1 mg/L	> 5 mg/L	> 5 mg/L
TSS	> 1 mg/L	> 50 mg/L	> 50 mg/L

Density of organisms in the test water	
≥ 50 μm organisms	≥ 3 Phyla/Division 5 species ≥ 100,000 inds./m³
≥ 10-50 μm organisms	≥ 3 Phyla/Division 5 species ≥ 1,000 inds./mL
Heterotrophic bacteria	≥ 10,000 cells/mL

Density of organisms in the treated water		
≥ 50 μm organisms		< 10 inds./m³
≥ 10-50 μm organisms		< 10 inds./mL
Bacteria	Toxicogenic *Vibrio cholerae* (O1, O139)	< 1 cfu/100 mL
	Escherichia coil	< 250 cfu/100mL
	Intestinal Enterococci	< 100 cfu/100mL

Sample volume			
Ballasting	Test water	≥ 50 μm organisms	20 L
		≥ 10-50 μm organisms	1 L
		Bacteria	1 L
	Control water	≥ 50 μm organisms	20 L
		≥ 10-50 μm organisms	1 L
		Bacteria	1 L
	Treated water	≥ 50 μm organisms	1 m³
		≥ 10-50 μm organisms	10 L
		Bacteria	2 L
de-Ballasting	Control water	≥ 50 μm organisms	20 L
		≥ 10-50 μm organisms	1 L
		Bacteria	1 L
	Treated water	≥ 50 μm organisms	1 m³
		≥ 10-50 μm organisms	10 L
		Bacteria	2 L

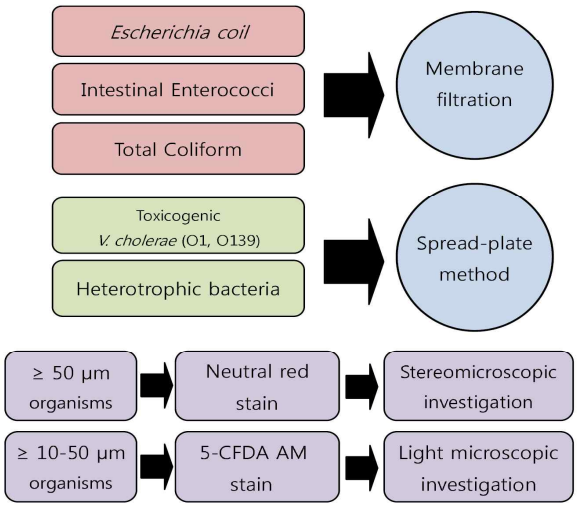

III. ORGANISMS DIVERSITY IN THE TEST WATER (1)

- **Ballasting (3rd cycle : 2012. 07. 19)**

≥ 50 μm organisms

Phylum/Division	Order	Genus/Species
Rotifera	Ploimida	*Brachionus plicatilis*
Protozoa	Tintinnida	*Tintinnopsis* sp.
Arthropoda	Anostraca	*Artemia salina*
	Cyclopoida	*Oithona* sp.
	Cladocera	*Podon* sp.
	Calanoida copepodite	-
	Copepod nauplius	-
Annelida	Polychaeta larva	-
Mollusca	Bivalve larva	-

≥ 10 - 50 μm organisms

Phylum/Division	Order	Genus/Species
Bacillariophyta	Thalassiosirales	*Thalassiosira* sp.
	Melosirales	*Stephanopyxis* sp.
	Chaetocerotales	*Chaetoceros* sp.
	Triceratiales	*Odontella* sp.
Dinophyta	Peridiniales	*Scrippsiella* sp.
		Protoperidinium sp.
Chlorophyta	Chlorodendrales	*Tetraselmis suecica*
	Desmidales	*Staurastrum* sp.

III. ORGANISMS DIVERSITY IN THE TEST WATER (2)

- **Ballasting (4th cycle : 2012. 07. 26)**

≥ 50 μm organisms

Phylum/Division	Order	Genus/Species
Rotifera	Ploimida	*Brachionus plicatilis*
Protozoa	Tintinnida	*Tintinnopsis* sp.
Arthropoda	Anostraca	*Artemia salina*
	Calanoida	*Paracalanus* sp.
	Cyclopoida	*Oithona* sp.
	Poecilostomatoida	*Corycaeus affinis*
	Cladocera	*Podon* sp.
	Sessilia	Balanus larva
	Calanoida copepodite	-
	Copepod nauplius	-
Annelida	Polychaeta larva	-
Mollusca	Bivalve larva	-
Platyhelminthes	Turbellarian	Műller's larva

≥ 10 - 50 μm organisms

Phylum/Division	Order	Genus/Species
Bacillariophyta	Thalassiosirales	*Detonula* sp.
	Chaetocerotales	*Chaetoceros* sp.
	Triceratiales	*Odontella* sp.
Dinophyta	Peridiniales	*Ceratium furca*
Chlorophyta	Chlorodendrales	*Tetraselmis suecica*
	Desmidales	*Staurastrum* sp.
	Sphaeropleales	*Scenedesmus* sp.

III. ORGANISMS DIVERSITY IN THE TEST WATER (3)

- **Ballasting (5th cycle : 2012. 08. 09)**

≥ 50 μm organisms

Phylum/Division	Order	Genus/Species
Rotifera	Ploimida	*Brachionus plicatilis*
Protozoa	Tintinnida	*Tintinnopsis* sp.
Arthropoda	Anostraca	*Artemia salina*
	Cyclopoida	*Oithona* sp.
	Sessilia	Balanus larva
	Calanoida copepodite	-
	Cyclopoida copepodite	-
	Copepod nauplius	-
Annelida	Polychaeta larva	-
Mollusca	Bivalve larva	-
Platyhelminthes	Turbellarian	Műller's larva

≥ 10 - 50 μm organisms

Phylum/Division	Order	Genus/Species
Bacillariophyta	Dictyocales	*Dictyocha* sp.
	Chaetocerotales	*Chaetoceros* spp. (2 sp.)
Dinophyta	Peridiniales	*Ceratium fusus*
		Scrippsiella sp.
Chlorophyta	Chlorodendrales	*Tetraselmis suecica*

III. ORGANISMS DIVERSITY IN THE TEST WATER (4)

- **Ballasting (6th cycle : 2012. 08. 16)**

≥ 50 μm organisms

Phylum/Division	Order	Genus/Species
Rotifera	Ploimida	*Brachionus plicatilis*
Protozoa	Tintinnida	*Tintinnopsis* sp.
Arthropoda	Anostraca	*Artemia salina*
	Calanoida	*Acartia omorri*
		Paracalanus sp.
	Cyclopoida	*Oithona* sp.
	Poecilostomatoida	*Corycaeus affinis*
	Harpacticoida	-
	Sessilia	Balanus larva
	Calanoida copepodite	-
	Cyclopoida copepodite	-
	Copepod nauplius	-
Annelida	Polychaeta larva	-
Mollusca	Bivalve larva	-
Platyhelminthes	Turbellarian	Műller's larva

≥ 10 - 50 μm organisms

Phylum/Division	Order	Genus/Species
Bacillariophyta	Thalassiosirales	*Thalassiosira* sp.
	Hemiaulales	*Eucampia* sp.
	Chaetocerotales	*Chaetoceros* sp.
Dinophyta	Peridiniales	*Ceratium furca*
	Oxyrrhinales	*Oxyrrhis* sp.
	Gymnodiniales	*Cochlodinium* sp.
Chlorophyta	Chlorodendrales	*Tetraselmis suecica*

III. ORGANISMS DIVERSITY IN THE TEST WATER (5)

- **Ballasting (7th cycle : 2012. 08. 23)**

≥ 50 μm organisms

Phylum/Division	Order	Genus/Species
Rotifera	Ploimida	*Brachionus plicatilis*
Protozoa	Tintinnida	*Tintinnopsis* sp.
Arthropoda	Anostraca	*Artemia salina*
	Calanoida	*Paracalanus* sp.
	Cyclopoida	*Oithona* sp.
	Harpacticoida	-
	Sessilia	Balanus larva
		Cyprid larva
	Calanoida copepodite	-
	Cyclopoida copepodite	-
	Copepod nauplius	-
Annelida	Polychaeta larva	-

≥ 10 - 50 μm organisms

Phylum/Division	Order	Genus/Species
Bacillariophyta	Thalassiosirales	*Thalassiosira* sp.
	Rhizosoleniales	*Guinardia* sp.
	Chaetocerotales	*Chaetoceros* sp.
Dinophyta	Gymnodiniales	*Gyrodinium* sp.
Chlorophyta	Chlorodendrales	*Tetraselmis suecica*
Protozoa		
Unidentified diatom		

III. ORGANISMS DIVERSITY IN THE TEST WATER (6)

- **Ballasting (8th cycle : 2012. 08. 30)**

≥ 50 μm organisms

Phylum/Division	Order	Genus/Species
Rotifera	Ploimida	*Brachionus plicatilis*
Protozoa	Tintinnida	*Tintinnopsis* sp.
Arthropoda	Anostraca	*Artemia salina*
	Calanoida	*Paracalanus* sp.
	Cyclopoida	*Oithona* sp.
	Sessilia	Balanus larva
	Calanoida copepodite	-
	Copepod nauplius	-
Annelida	Polychaeta larva	-
Mollusca	Bivalve larva	-

≥ 10 - 50 μm organisms

Phylum/Division	Order	Genus/Species
Bacillariophyta	Thalassiosirales	*Thalassiosira* sp.
	Rhizosoleniales	*Guinardia* sp.
	Naviculaes	*Pinnularia* sp.
	Paraliales	*Paralia* sp.
Dinophyta	Oxyrrhinales	*Oxyrrhis* sp.
Chlorophyta	Chlorodendrales	*Tetraselmis suecica*
Protozoa		

III. ORGANISMS DIVERSITY IN THE TEST WATER (7)

- **Ballasting (9th cycle : 2012. 09. 06)**

≥ 50 μm organisms

Phylum/Division	Order	Genus/Species
Rotifera	Ploimida	*Brachionus plicatilis*
Protozoa	Tintinnida	*Tintinnopsis* sp.
Arthropoda	Anostraca	*Artemia salina*
	Calanoida	*Paracalanus* sp.
	Cyclopoida	*Oithona* sp.
	Harpacticoida	-
	Sessilia	Balanus larva
	Calanoida copepodite	-
	Copepod nauplius	-
Annelida	Polychaeta larva	-

≥ 10 - 50 μm organisms

Phylum/Division	Order	Genus/Species
Bacillariophyta	Thalassiosirales	*Thalassiosira* sp.
	Rhizosoleniales	*Guinardia* sp.
	Chaetocerotales	*Chaetoceros* sp.
	Lithodesmidales	*Ditylum* sp.
	Triceratiales	*Odontella* sp.
Dinophyta	Prorocetrales	*Prorocentrum* sp.
	Gymnodiniales	*Karenia mikimotoi*
Chlorophyta	Chlorodendrales	*Tetraselmis suecica*
Protozoa		

III. ORGANISMS DIVERSITY IN THE TEST WATER (8)

- **Ballasting (10th cycle : 2012. 09. 13)**

≥ 50 μm organisms

Phylum/Division	Order	Genus/Species
Rotifera	Ploimida	*Brachionus plicatilis*
Protozoa	Tintinnida	*Tintinnopsis* sp.
Arthropoda	Anostraca	*Artemia salina*
	Cyclopoida	*Oithona* sp.
	Harpacticoida	-
	Calanoida copepodite	-
	Copepod nauplius	-
Annelida	Polychaeta larva	-
Platyhelminthes	Turbellarian	Műller's larva

≥ 10 - 50 μm organisms

Phylum/Division	Order	Genus/Species
Bacillariophyta	Melosirales	*Stephanopyxis* sp.
	Lithodesmidales	*Ditylum* sp.
	Paraliales	*Paralia* sp.
Dinophyta	Gymnodiniales	*Gyrodinium* sp.
Chlorophyta	Chlorodendrales	*Tetraselmis suecica*
	Desmidales	*Staurastrum* sp.
Protozoa		
Unidentified 2 species		

III. ORGANISMS DIVERSITY IN THE TEST WATER (9)

- **Ballasting (11th cycle : 2012. 09. 20)**

≥ 50 μm organisms

Phylum/Division	Order	Genus/Species
Rotifera	Ploimida	*Brachionus plicatilis*
Protozoa	Tintinnida	*Tintinnopsis* sp.
Arthropoda	Anostraca	*Artemia salina*
	Calanoida	*Paracalanus* sp.
	Cyclopoida	*Oithona* sp.
	Harpacticoida	-
	Copepod nauplius	-
	Sessilia	Balanus larva
Annelida	Polychaeta larva	-

≥ 10 - 50 μm organisms

Phylum/Division	Order	Genus/Species
Bacillariophyta	Thalassiosirales	*Thalassiosira* sp.
	Naviculaes	*Navicula* sp.
	Paraliales	*Paralia* sp.
Dinophyta	Peridiniales	*Ceratium furca*
Chlorophyta	Chlorodendrales	*Tetraselmis suecica*
Protozoa		
Unidentified species		

III. ORGANISMS DIVERSITY IN THE TEST WATER (10)

- **Ballasting (12th cycle : 2012. 09. 27)**

≥ 50 μm organisms

Phylum/Division	Order	Genus/Species
Rotifera	Ploimida	*Brachionus plicatilis*
Protozoa	Tintinnida	*Tintinnopsis* sp.
Arthropoda	Anostraca	*Artemia salina*
	Calanoida	*Paracalanus* sp.
	Cyclopoida	*Oithona* sp.
	Poecilostomatoida	*Corycaeus affinis*
	Sessilia	Balanus larva
	Calanoida copepodite	-
	Copepod nauplius	-
Annelida	Polychaeta larva	-

≥ 10 - 50 μm organisms

Phylum/Division	Order	Genus/Species
Bacillariophyta	Thalassiosirales	*Thalassiosira* sp.
		Skeletonema sp.
Dinophyta	Prorocetrales	*Prorocentrum* sp.
	Gymnodiniales	*Gyrodinium* sp.
Chlorophyta	Chlorodendrales	*Tetraselmis suecica*
	Sphaeropleales	*Coelastrum* sp.
Protozoa		
Unidentified species		

IV. TEST RESULT DETAILS (1)

TEST RESULTS IN > 32 PSU (5th cycle : 2012. 08. 09 - 2012. 08. 14)

Test Item		Ballasting			de-Ballasting	
		Test water	Control water	Treated water	Control water	Treated water
Water temperature (°C)		27.48	27.65	27.70	27.56	28.44
pH		8.15	8.15	8.16	7.48	7.58
ORP (mV)		376	340	339	367	385
Salinity (PSU)		32.16	32.12	32.05	32.15	31.95
DO (mg/L)		7.42	7.63	7.45	6.75	7.07
Turbidity (NTU)		5.90	5.49	5.72	6.04	4.97
Total suspended solid (mg/L)		20.90	18.43	21.30	17.93	16.23
Dissolved organic carbon (mg/L)		3.34	3.08	3.43	2.37	2.27
Particulate organic carbon (mg/L)		1.49	1.95	1.66	0.51	0.35
≥ 50 μm organisms (inds./m^3)		151 834	17 056	8	1 251	0
≥ 10 - 50 μm organisms (inds./mL)		2 466	1 895	1	470	1
Heterotrophic bacteria (cells/mL)		16 773	14 900	6	11 289	27
Bacteria (CFU/100 mL)	Coliform	TNTC*	TNTC	2	128	1
	Escherichia coli	190	448	1	74	3
	Intestinal Enterococci	734	762	1	87	1
	Toxicogenic *Vibrio cholerae* (O1, O139)	0	0	0	0	0

*TNTC, Too Numerous To Count

TEST RESULTS IN > 32 PSU (6th test cycle : 2012. 08. 16 - 2012. 08. 21)

Test Item		Ballasting			de-Ballasting	
		Test water	Control water	Treated water	Control water	Treated water
Water temperature (°C)		25.64	25.32	25.82	27.91	29.46
pH		8.13	8.12	8.14	7.51	7.57
ORP (mV)		373	332	336	264	292
Salinity (PSU)		32.34	32.45	32.34	32.77	32.52
DO (mg/L)		7.75	7.62	7.73	6.81	7.00
Turbidity (NTU)		3.60	4.28	3.93	4.18	3.37
Total suspended solid (mg/L)		20.00	20.03	18.33	14.47	13.83
Dissolved organic carbon (mg/L)		3.01	3.07	3.16	1.70	1.79
Particulate organic carbon (mg/L)		1.38	1.85	1.85	0.39	0.27
≥ 50 μm organisms (inds./m^3)		242 834	252 779	38	6 528	0
≥ 10 - 50 μm organisms (inds./mL)		1 145	1 348	1	258	1
Heterotrophic bacteria (cells/mL)		10 319	12 978	138	45 234	2
Bacteria (CFU/100 mL)	Coliform	TNTC*	TNTC	1	73	0
	Escherichia coli	63	76	1	67	20
	Intestinal Enterococci	TNTC	TNTC	1	651	1
	Toxicogenic *Vibrio cholerae* (O1, O139)	0	0	0	0	0

*TNTC, Too Numerous To Count

IV. TEST RESULT DETAILS (2)

TEST RESULTS IN > 32 PSU (7th test cycle : 2012. 08. 23 - 2012. 08.29)

Test Item		Ballasting			de-Ballasting	
		Test water	Control water	Treated water	Control water	Treated water
Water temperature (°C)		18.28	18.16	18.64	25.61	26.07
pH		8.05	8.09	8.09	7.46	7.56
ORP (mV)		429	368	385	300	326
Salinity (PSU)		33.25	33.27	33.09	33.52	33.44
DO (mg/L)		8.63	8.92	8.69	6.47	7.09
Turbidity (NTU)		8.32	7.70	7.95	6.26	6.45
Total suspended solid (mg/L)		23.50	23.53	25.37	14.67	17.63
Dissolved organic carbon (mg/L)		3.07	3.20	3.12	1.37	1.54
Particulate organic carbon (mg/L)		1.79	1.78	1.94	0.29	0.34
≥ 50 μm organisms (inds./m^3)		351 167	177 556	79	7 390	0
≥ 10 - 50 μm organisms (inds./mL)		1 348	1 150	1	134	0
Heterotrophic bacteria (cells/mL)		20 773	15 778	36	34 478	374
Bacteria (CFU/100 mL)	Coliform	TNTC*	TNTC	1	278	1
	Escherichia coli	374	469	2	3	34
	Intestinal Enterococci	TNTC	TNTC	1	1 019	0
	Toxicogenic *Vibrio cholerae* (O1, O139)	0	0	0	0	0

*TNTC, Too Numerous To Count

TEST RESULTS IN > 32 PSU (8th test cycle : 2012. 08 30 - 2012. 09. 04)

Test Item		Ballasting			de-Ballasting	
		Test water	Control water	Treated water	Control water	Treated water
Water temperature (°C)		19.39	19.98	20.00	23.34	24.12
pH		8.00	8.04	8.03	7.57	7.68
ORP (mV)		350	301	290	321	344
Salinity (PSU)		33.16	33.29	33.15	33.40	33.44
DO (mg/L)		8.11	8.20	8.40	7.69	7.71
Turbidity (NTU)		11.30	11.87	11.87	5.91	7.81
Total suspended solid (mg/L)		22.00	27.27	27.37	13.47	19.03
Dissolved organic carbon (mg/L)		2.85	2.91	2.87	1.34	1.50
Particulate organic carbon (mg/L)		2.05	1.74	1.90	0.19	0.29
≥ 50 μm organisms (inds./m^3)		281 167	65 667	584	6 529	0
≥ 10 - 50 μm organisms (inds./mL)		1 243	914	2	275	1
Heterotrophic bacteria (cells/mL)		19 955	23 467	295	126 867	775
Bacteria (CFU/100 mL)	Coliform	TNTC*	TNTC	0	71	0
	Escherichia coli	TNTC	TNTC	1	16	5
	Intestinal Enterococci	TNTC	TNTC	1	1 197	1
	Toxicogenic *Vibrio cholerae* (O1, O139)	0	0	0	0	0

*TNTC, Too Numerous To Count

IV. TEST RESULT DETAILS (3)

TEST RESULTS IN > 32 PSU (9th test cycle : 2012. 09. 06 - 2012. 09. 11)

Test Item		Ballasting			de-Ballasting	
		Test water	Control water	Treated water	Control water	Treated water
Water temperature (°C)		21.35	21.56	21.58	22.36	23.08
pH		8.09	8.11	8.10	7.75	7.85
ORP (mV)		341	302	306	246	246
Salinity (PSU)		32.30	32.22	32.10	32.32	32.34
DO (mg/L)		7.64	8.37	8.19	7.53	7.96
Turbidity (NTU)		3.83	3.79	4.19	3.80	2.93
Total suspended solid (mg/L)		16.50	14.30	16.53	9.10	7.60
Dissolved organic carbon (mg/L)		3.08	2.18	3.30	1.34	1.55
Particulate organic carbon (mg/L)		1.90	1.81	1.58	0.34	0.23
≥ 50 µm organisms (inds./m^3)		204 000	160 334	78	7 389	0
≥ 10 - 50 µm organisms (inds./mL)		1 215	847	1	102	1
Heterotrophic bacteria (cells/mL)		30 955	33 023	418	75 345	170
Bacteria (CFU/100 mL)	Coliform	TNTC*	TNTC	7	19	0
	Escherichia coli	43	82	0	15	1
	Intestinal Enterococci	144	700	0	86	0
	Toxicogenic *Vibrio cholerae* (O1, O139)	0	0	0	0	0

*TNTC, Too Numerous To Count

TEST RESULTS IN 3 - 32 PSU (3rd test cycle: 2012. 07. 19 - 2012. 07. 24)

Test Item		Ballasting			de-Ballasting	
		Test water	Control water	Treated water	Control water	Treated water
Water temperature (°C)		23.66	23.71	23.95	26.32	27.42
pH		8.07	8.05	8.09	6.87	6.99
ORP (mV)		377	343	353	334	381
Salinity (PSU)		18.05	17.92	18.26	17.94	18.11
DO (mg/L)		8.61	8.75	8.64	7.05	7.72
Turbidity (NTU)		32.50	64.37	32.60	23.53	11.80
Total suspended solid (mg/L)		75.30	87.47	76.07	22.00	24.53
Dissolved organic carbon (mg/L)		7.45	7.50	7.66	5.82	5.83
Particulate organic carbon (mg/L)		18.33	18.02	19.17	2.71	3.67
≥ 50 µm organisms (inds./m^3)		193 000	103 278	153	100 890	0
≥ 10 - 50 µm organisms (inds./mL)		1 944	1 823	2	364	0
Heterotrophic bacteria (cells/mL)		21 220	12 461	0	0	0
Bacteria (CFU/100 mL)	Coliform	TNTC*	TNTC	2	TNTC	55
	Escherichia coli	77	TNTC	0	328	2
	Intestinal Enterococci	53	227	0	38	1
	Toxicogenic *Vibrio cholerae* (O1, O139)	0	0	0	0	0

*TNTC, Too Numerous To Count

IV. TEST RESULT DETAILS (4)

TEST RESULTS IN 3 - 32 PSU (4th test cycle : 2012. 07. 26 - 2012. 07. 31)

Test Item		Ballasting			de-Ballasting	
		Test water	Control water	Treated water	Control water	Treated water
Water temperature (°C)		25.06	24.50	25.53	28.10	29.65
pH		8.12	8.14	8.14	6.93	7.13
ORP (mV)		379	329	329	198	378
Salinity (PSU)		18.92	19.12	18.95	19.10	18.87
DO (mg/L)		8.54	8.59	8.49	6.99	7.49
Turbidity (NTU)		25.10	25.27	26.80	10.99	16.47
Total suspended solid (mg/L)		68.30	68.00	68.77	32.13	49.97
Dissolved organic carbon (mg/L)		7.44	7.67	8.21	7.18	7.06
Particulate organic carbon (mg/L)		19.06	17.45	17.14	4.21	8.85
≥ 50 μm organisms (inds./m^3)		157 667	100 223	143	1 334	0
≥ 10 - 50 μm organisms (inds./mL)		1 350	1 270	1	206	1
Heterotrophic bacteria (cells/mL)		34 334	14 023	36	12 623	8
Bacteria (CFU/100 mL)	Coliform	TNTC*	TNTC	8	TNTC	2
	Escherichia coli	560	TNTC	0	733	6
	Intestinal Enterococci	54	445	1	24	1
	Toxicogenic *Vibrio cholerae* (O1, O139)	0	0	0	0	0

*TNTC, Too Numerous To Count

TEST RESULTS IN 3 - 32 PSU (10th test cycle : 2012. 09. 13 - 2012. 09. 18)

Test Item		Ballasting			de-Ballasting	
		Test water	Control water	Treated water	Control water	Treated water
Water temperature (°C)		23.93	24.38	24.35	22.28	22.63
pH		8.25	8.25	8.25	7.25	7.35
ORP (mV)		339	299	298	185	323
Salinity (PSU)		18.23	18.40	18.19	18.27	18.13
DO (mg/L)		8.66	8.42	8.41	8.24	8.30
Turbidity (NTU)		27.10	26.27	27.93	10.16	11.23
Total suspended solid (mg/L)		79.70	76.53	78.83	24.20	28.13
Dissolved organic carbon (mg/L)		6.51	6.40	6.54	3.10	2.65
Particulate organic carbon (mg/L)		13.84	14.63	17.47	3.79	4.90
≥ 50 μm organisms (inds./m^3)		412 167	340 000	4 987	17 445	0
≥ 10 - 50 μm organisms (inds./mL)		1 234	1 011	24	155	1
Heterotrophic bacteria (cells/mL)		44 091	38 678	187	56 345	269
Bacteria (CFU/100 mL)	Coliform	TNTC*	TNTC	1	TNTC	2
	Escherichia coli	TNTC	TNTC	1	197	7
	Intestinal Enterococci	TNTC	TNTC	1	755	1
	Toxicogenic *Vibrio cholerae* (O1, O139)	0	0	0	0	0

*TNTC, Too Numerous To Count

IV. TEST RESULT DETAILS (5)

TEST RESULTS IN 3 - 32 PSU (11th test cycle: 2012. 09. 20 - 2012. 09. 25)

Test Item		Ballasting			de-Ballasting	
		Test water	Control water	Treated water	Control water	Treated water
Water temperature (°C)		22.64	22.96	22.82	22.27	23.22
pH		8.29	8.28	8.27	7.29	7.39
ORP (mV)		312	284	293	204	287
Salinity (PSU)		18.54	18.70	18.47	18.71	18.47
DO (mg/L)		9.03	8.67	8.83	8.39	8.41
Turbidity (NTU)		73.00	76.93	72.93	46.37	33.93
Total suspended solid (mg/L)		96.50	97.57	94.17	43.90	45.53
Dissolved organic carbon (mg/L)		6.22	6.39	6.45	2.33	2.39
Particulate organic carbon (mg/L)		16.55	14.65	14.45	5.68	3.10
≥ 50 μm organisms (inds./m^3)		272 667	352 001	17 678	9 890	0
≥ 10 - 50 μm organisms (inds./mL)		1 079	1 028	4	161	1
Heterotrophic bacteria (cells/mL)		47 090	66 800	565	48 667	462
Bacteria (CFU/100 mL)	Coliform	TNTC*	TNTC	2	TNTC	1
	Escherichia coli	TNTC	TNTC	TNTC	502	1
	Intestinal Enterococci	237	TNTC	1	TNTC	0
	Toxicogenic *Vibrio cholerae* (O1, O139)	0	0	0	0	0

*TNTC, Too Numerous To Count

TEST RESULTS IN 3 - 32 PSU (12th test cycle: 2012. 09. 27 - 2012. 10. 03)

Test Item		Ballasting			de-Ballasting	
		Test water	Control water	Treated water	Control water	Treated water
Water temperature (°C)		22.51	22.80	22.70	21.05	22.31
pH		8.49	8.44	8.47	7.31	7.20
ORP (mV)		341	306	307	262	295
Salinity (PSU)		17.76	17.85	17.78	17.83	17.80
DO (mg/L)		8.86	8.98	8.92	9.00	8.22
Turbidity (NTU)		67.30	67.57	66.13	32.33	27.83
Total suspended solid (mg/L)		97.00	107.67	101.43	44.43	41.67
Dissolved organic carbon (mg/L)		6.33	6.39	6.49	3.15	3.47
Particulate organic carbon (mg/L)		12.64	17.03	16.60	2.64	3.71
≥ 50 μm organisms (inds./m^3)		387 000	342 000	30 267	806	0
≥ 10 - 50 μm organisms (inds./mL)		1 288	807	29	154	1
Heterotrophic bacteria (cells/mL)		25 364	38 145	838	37 478	326
Bacteria (CFU/100 mL)	Coliform	424	478	0	688	0
	Escherichia coli	557	657	2	103	2
	Intestinal Enterococci	TNTC*	704	1	143	0
	Toxicogenic *Vibrio cholerae* (O1, O139)	0	0	0	0	0

*TNTC, Too Numerous To Count