ENVIROLOGIC
TECHNOLOGIES INC.

June 15, 2009

Mr. Shawn Brown
Brown Family Holdings, LLC
860 Gibson
Kalamazoo, MI 49001

Re: Due Diligence Services, Former Goodwill Industries of SW Michigan, 2700 N. Pitcher St., Kalamazoo, Michigan.

Dear Mr. Brown:

Pursuant to the request of the Kalamazoo County Brownfield Redevelopment Authority (KCBRA), Envirologic Technologies, Inc. has completed a Phase I & II ESA, Baseline Environmental Assessment (BEA), and Section 7a Compliance Analysis ("due care" plan) for the above referenced property. As you are aware, bound copies of the documents have been provided to you for your records. In addition, bound copies of the documents have also been forwarded to the attention of Mr. Mark DuCharme of the MDEQ. Included, please find a CD containing electronic copies of the environmental reports. Electronic copies of the reports have also been forwarded to Ms. Levine, Mr. Kinnane, and Mr. Artley.

Envirologic is in the process of completing a Brownfield Plan for the project. Submittal of the attached environmental reports to the MDEQ and completion of the Brownfield Plan represents the extent of all environmental activities that Envirologic has been authorized to complete on your behalf by the KCBRA. If you have any questions, please do not hesitate to contact our office at (269) 342-1100.

Sincerely,

ENVIROLOGIC TECHNOLOGIES, INC

Erik D. Peterson
Project Manager

Jeffrey C. Hawkins
President

EDP:edp

Attachment
Cc. Ms. Sharan Levine

ENVIROLOGIC
TECHNOLOGIES INC.

Mr. Chuck Kinnane
Mr. David Artley
H:\Projects_K\KzooCounty\Brownfield Redevelopment Authority\Former Goodwill\080503\BEACoverLetter.doc

2960 INTERSTATE PARKWAY • KALAMAZOO, MICHIGAN 49048 • 269-342-1100 • FAX 269-342-4945

E N V I R O L O G I C
TECHNOLOGIES, INC.

BASELINE ENVIRONMENTAL ASSESSMENT CONDUCTED PURSUANT TO SECTION 20126(1)(C) OF 1994 PA 451, PART 201, AS AMENDED, AND THE RULES PROMULGATED THERE UNDER

FOR

2700 N. PITCHER ST.
KALAMAZOO TOWNSHIP
KALAMAZOO COUNTY, MICHIGAN

Prepared For:

Brown Family Holdings, LLC
860 Gibson St.
Kalamazoo, MI 49001

&

Beckan Industries, Inc.
860 Gibson St.
Kalamazoo, MI 49001

Prepared by:

ENVIROLOGIC TECHNOLOGIES, INC.
2960 Interstate Parkway
Kalamazoo, Michigan 49048
(269) 342-1100

FOR DEQ USE ONLY
BEA Disclosure #_____

MICHIGAN DEPARTMENT OF ENVIRONMENTAL QUALITY
REMEDIATION AND REDEVELOPMENT DIVISION

DISCLOSURE OF A BASELINE ENVIRONMENTAL ASSESSMENT
(FORM EQP4446 (REV. 4/03))

(Under the authority of Part 201, 1994 Act 451, as amended, and the Rules promulgated thereunder)

DO NOT use this form for requesting a Baseline Environmental Assessment ("BEA") adequacy determination, OR if the property is not a facility, OR if the BEA was complete before the effective date of the BEA rules. *Please answer the following questions as completely as possible.*

Name and address of submitter (individual or legal entity):*
Brown Family Holdings, LLC
860 Gibson St.
Kalamazoo, MI
49001

Status relative to the property:

	Former	Current	Prospective
Owner*	☐	☐	☒
Operator*	☐	☐	☐

Address/location of property where BEA was conducted:
Goodwill Industries of SW Michigan
2700 N. Pitcher St.
Kalamazoo Township

County: Kalamazoo

Provide the property tax identification number(s) or, if applicable, the ward and item number(s) for the property identified in the BEA. Required pursuant to Rule 907.
06-03-460-010

Contact person: Mr. Erik Peterson Telephone #: (269) 342-1100

If the address of the person seeking liability protection above is different from the address that should be used to correspond with the contact person, please provide the contact person's address:
Envirologic Technologies, Inc.
2960 Interstate Parkway
Kalamazoo, MI 49048

Check the appropriate response to each of the following questions.

	YES	NO
1. Is it known that the source of contamination at the property is primarily from any of the following?		
• **A leaking underground storage tank (UST) regulated under Part 213, 1994 PA 451, as amended.**	☐	☒
• **A licensed landfill or solid waste management facility.**	☐	☒
• **A licensed hazardous waste treatment, storage, or disposal facility.**	☐	☒
• **Oil and gas development related activities.**	☐	☒

The source of the release that resulted in this property becoming a "facility" will determine which DEQ division will maintain a file regarding this BEA.

2. Based on the Part 201 Rules, this BEA is a:

Category N ☐
Category D ☐
Category S ☒

	YES	NO
3. Is the property at which the BEA was conducted a "facility"* as defined by Section 20101? If the answer to this question is NO, do not submit the BEA to the DEQ.	☒	☐

4. **Was the BEA conducted* prior to or within 45 days after the date of purchase*, occupancy, or foreclosure of the property, whichever is earliest, and completed* not more than 15 days after the date required by Section 20126(1)(c) or Rule 299.5903(8)?** If the answer to either portion of this question is no, you are ineligible for an exemption from liability based on the BEA. — YES ☒ NO ☐

5. **Is the BEA being disclosed to the DEQ no later than 8 months after the earliest of the date of purchase, occupancy, or foreclosure?** All disclosures pursuant to Rule 919(3) must be submitted to the DEQ no later than 8 months after the earliest of the date of purchase, occupancy, or foreclosure. — YES ☒ NO ☐

6. **Are any USTs or abandoned or discarded containers identified in the BEA?** If yes, this information must be provided on Form EQP4476. — YES ☐ NO ☒

7. **Does this BEA rely on an isolation zone or an engineering control that requires an affidavit pursuant to Rule 299.5909(3) or 299.5909(4)?** If yes, a completed affidavit, Form EQP4479, must be attached or the BEA will not be considered complete. — YES ☒ NO ☐

With my signature below, I certify that the enclosed BEA and all related materials are complete and accurate to the best of my knowledge and belief. I understand that intentionally submitting false information to the DEQ is a felony and may result in fines up to $25,000 for each violation.

Signature of Submitter: Shawn E. Brown — June 11, 2009
(Person legally authorized to bind the person seeking liability protection) — Date

Name (Typed or Printed) Shawn Brown

Title Member/President

FOR DEQ USE ONLY
BEA Disclosure #_____

MICHIGAN DEPARTMENT OF ENVIRONMENTAL QUALITY
REMEDIATION AND REDEVELOPMENT DIVISION

DISCLOSURE OF A BASELINE ENVIRONMENTAL ASSESSMENT
(FORM EQP4446 (REV. 4/03))

(Under the authority of Part 201, 1994 Act 451, as amended, and the Rules promulgated thereunder)

DO NOT use this form for requesting a Baseline Environmental Assessment ("BEA") adequacy determination, OR if the property is not a facility, OR if the BEA was complete before the effective date of the BEA rules. *Please answer the following questions as completely as possible.*

Name and address of submitter (individual or legal entity):*
Beckan Industries, Inc.
860 Gibson St.
Kalamazoo, MI
49001

Status relative to the property:

	Former	Current	Prospective
Owner*	☐	☐	☐
Operator*	☐	☐	☒

Address/location of property where BEA was conducted:
Goodwill Industries of SW Michigan
2700 N. Pitcher St.
Kalamazoo Township

County: Kalamazoo

Provide the property tax identification number(s) or, if applicable, the ward and item number(s) for the property identified in the BEA. Required pursuant to Rule 907.
06-03-460-010

Contact person: Mr. Erik Peterson Telephone #: (269) 342-1100

If the address of the person seeking liability protection above is different from the address that should be used to correspond with the contact person, please provide the contact person's address:
Envirologic Technologies, Inc.
2960 Interstate Parkway
Kalamazoo, MI 49048

Check the appropriate response to each of the following questions.

	YES	NO
1. Is it known that the source of contamination at the property is primarily from any of the following?		
• **A leaking underground storage tank (UST) regulated under Part 213, 1994 PA 451, as amended.**	☐	☒
• **A licensed landfill or solid waste management facility.**	☐	☒
• **A licensed hazardous waste treatment, storage, or disposal facility.**	☐	☒
• **Oil and gas development related activities.**	☐	☒

The source of the release that resulted in this property becoming a "facility" will determine which DEQ division will maintain a file regarding this BEA.

2. Based on the Part 201 Rules, this BEA is a:

Category N ☐
Category D ☐
Category S ☒

	YES	NO
3. Is the property at which the BEA was conducted a "facility"* as defined by Section 20101? If the answer to this question is NO, do not submit the BEA to the DEQ.	☒	☐

4. **Was the BEA conducted* prior to or within 45 days after the date of purchase*, occupancy, or foreclosure of the property, whichever is earliest, and completed* not more than 15 days after the date required by Section 20126(1)(c) or Rule 299.5903(8)?** If the answer to either portion of this question is no, you are ineligible for an exemption from liability based on the BEA. — YES ☒ NO ☐

5. **Is the BEA being disclosed to the DEQ no later than 8 months after the earliest of the date of purchase, occupancy, or foreclosure?** All disclosures pursuant to Rule 919(3) must be submitted to the DEQ no later than 8 months after the earliest of the date of purchase, occupancy, or foreclosure. — YES ☒ NO ☐

6. **Are any USTs or abandoned or discarded containers identified in the BEA?** If yes, this information must be provided on Form EQP4476. — YES ☐ NO ☒

7. **Does this BEA rely on an isolation zone or an engineering control that requires an affidavit pursuant to Rule 299.5909(3) or 299.5909(4)?** If yes, a completed affidavit, Form EQP4479, must be attached or the BEA will not be considered complete. — YES ☒ NO ☐

With my signature below, I certify that the enclosed BEA and all related materials are complete and accurate to the best of my knowledge and belief. I understand that intentionally submitting false information to the DEQ is a felony and may result in fines up to $25,000 for each violation.

Signature of Submitter: Shawn E. Brown — June 11, 2009
(Person legally authorized to bind the person seeking liability protection) — Date

Name (Typed or Printed) Shawn Brown

Title President /Member

MICHIGAN DEPARTMENT OF ENVIRONMENTAL QUALITY
REMEDIATION AND REDEVELOPMENT DIVISION

AFFIDAVIT IN SUPPORT OF A DISCLOSURE RELYING ON ISOLATION ZONES OR ENGINEERING CONTROLS OR OTHER SIMILAR FEATURES FOR A BASELINE ENVIRONMENTAL ASSESSMENT (FORM EQP4479 (REV. 4/03))

(Under the authority of Part 201, 1994 Act 451, as amended, and the Rules promulgated thereunder)

STATE OF Michigan)
)
COUNTY OF Kalamazoo)

The purpose of this Affidavit is to set forth certain information and documentation to enable the Michigan Department of Environmental Quality (hereinafter the "DEQ") to make a finding of adequacy, at a time the DEQ determines to be appropriate, on the Baseline Environmental Assessment ("BEA") disclosed pursuant to Section 20126(1)(c) of Part 201, Environmental Remediation, of the Natural Resources and Environmental Protection Act (hereinafter the "NREPA"), 1994 PA 451, as amended. All terms found in this document which are defined in the NREPA, Part 3, Part 201, and the Part 201 Rules, shall have the same meaning as in the statute and the Part 201 Rules.

The undersigned Affiant, being first duly sworn, deposes and says as follows:

1. **THIS AFFIDAVIT** is executed by the undersigned Mr. Shawn Brown, whose title is Member, on behalf of Brown Family Holding, LLC (hereinafter "the Submitter") located at 860 Gibson St., Kalamazoo, MI 49001.

2. The Submitter intends to purchase a property located at 2700 N. Pitcher St. Kalamazoo Township, MI (hereinafter the "Property") on June 11, 2009.

3. The Property referred to in this BEA is a "Facility."

4. The language in this Affidavit does not deviate from that in the model Affidavit, Form EQP4479 (Rev. 4/03), except as provided for in item #6.

5. The BEA included in this disclosure was conducted on June 9, 2009 and completed on June 9, 2009. The BEA, to the best of the Submitter's knowledge and belief, reasonably defines the existing conditions and circumstances at the facility so that in the event of a release subsequent to the Submitter's purchase of the Property, there is a means of distinguishing any new release from existing contamination.

6. The submitter acknowledges that if there is a failure of an engineering control or similar feature identified in the BEA, and a release occurs as a result of the failure, the BEA does not provide an exemption to liability for release response activity necessary to address contamination resulting from the failure. The burden of distinguishing the release attributable to the failure of the engineering control from existing contamination shall be borne by the submitter according to Section 29 of Part 201.

I affirm that the above representations are true and are based upon my personal knowledge and belief after all reasonable inquiry.

I certify that I am legally authorized to execute this Affidavit and to bind the Submitter to the terms and conditions of this Affidavit.

I understand that intentionally submitting false information to the DEQ is a felony and may result in fines of up to $25,000 for each violation.

I acknowledge that this Affidavit has been provided pursuant to Section 20126(1)(c) of the NREPA and Rule 909 of the rules promulgated thereunder.

Shawn E. Brown
Signature of Submitter or Person Legally Authorized to Bind Submitter

June 11, 2009
Date

Mr. Shawn Brown
Print or Type Legal Name

SUBSCRIBED AND SWORN to before me this 11th day of June, 2009, a Notary Public in and for Kalamazoo County, Michigan.

Peggy Sue Knotts
Notary Public Peggy Sue Knotts
Kalamazoo County, Michigan
My Commission Expires: 12/09/2011

MICHIGAN DEPARTMENT OF ENVIRONMENTAL QUALITY
REMEDIATION AND REDEVELOPMENT DIVISION

AFFIDAVIT IN SUPPORT OF A DISCLOSURE RELYING ON ISOLATION ZONES OR ENGINEERING CONTROLS OR OTHER SIMILAR FEATURES FOR A BASELINE ENVIRONMENTAL ASSESSMENT (FORM EQP4479 (REV. 4/03))

(Under the authority of Part 201, 1994 Act 451, as amended, and the Rules promulgated thereunder)

STATE OF Michigan)
)
COUNTY OF Kalamazoo)

The purpose of this Affidavit is to set forth certain information and documentation to enable the Michigan Department of Environmental Quality (hereinafter the "DEQ") to make a finding of adequacy, at a time the DEQ determines to be appropriate, on the Baseline Environmental Assessment ("BEA") disclosed pursuant to Section 20126(1)(c) of Part 201, Environmental Remediation, of the Natural Resources and Environmental Protection Act (hereinafter the "NREPA"), 1994 PA 451, as amended. All terms found in this document which are defined in the NREPA, Part 3, Part 201, and the Part 201 Rules, shall have the same meaning as in the statute and the Part 201 Rules.

The undersigned Affiant, being first duly sworn, deposes and says as follows:

1. **THIS AFFIDAVIT** is executed by the undersigned Mr. Shawn Brown, whose title is Member, on behalf of Brown Family Holding, LLC (hereinafter "the Submitter") located at 860 Gibson St., Kalamazoo, MI 49001.

2. The Submitter intends to purchase a property located at 2700 N. Pitcher St. Kalamazoo Township, MI (hereinafter the "Property") on June 11, 2009.

3. The Property referred to in this BEA is a "Facility."

4. The language in this Affidavit does not deviate from that in the model Affidavit, Form EQP4479 (Rev. 4/03), except as provided for in item #6.

5. The BEA included in this disclosure was conducted on June 9, 2009 and completed on June 9, 2009. The BEA, to the best of the Submitter's knowledge and belief, reasonably defines the existing conditions and circumstances at the facility so that in the event of a release subsequent to the Submitter's purchase of the Property, there is a means of distinguishing any new release from existing contamination.

6. The submitter acknowledges that if there is a failure of an engineering control or similar feature identified in the BEA, and a release occurs as a result of the failure, the BEA does not provide an exemption to liability for release response activity necessary to address contamination resulting from the failure. The burden of distinguishing the release attributable to the failure of the engineering control from existing contamination shall be borne by the submitter according to Section 29 of Part 201.

I affirm that the above representations are true and are based upon my personal knowledge and belief after all reasonable inquiry.

I certify that I am legally authorized to execute this Affidavit and to bind the Submitter to the terms and conditions of this Affidavit.

I understand that intentionally submitting false information to the DEQ is a felony and may result in fines of up to $25,000 for each violation.

I acknowledge that this Affidavit has been provided pursuant to Section 20126(1)(c) of the NREPA and Rule 909 of the rules promulgated thereunder.

Shawn E. Brown
Signature of Submitter or Person Legally Authorized to Bind Submitter

June 11, 2009
Date

Mr. Shawn Brown
Print or Type Legal Name

SUBSCRIBED AND SWORN to before me this 11th day of June, 2009, a Notary Public in and for Kalamazoo County, Michigan.

Peggy Sue Knotts
Notary Public Peggy Sue Knotts
Kalamazoo County, Michigan
My Commission Expires: 12/09/2011

Table of Contents

1. IDENTIFICATION OF AUTHOR AND DATE BEA WAS CONDUCTED AND DATE BEA WAS COMPLETED 1

2. INTRODUCTION 2

3. PROPERTY DESCRIPTION & INTENDED HAZARDOUS SUBSTANCE USE 4

PROPERTY DESCRIPTION 4
INTENDED HAZARDOUS SUBSTANCE USE 4

4. KNOWN CONTAMINATION 6

SOIL/GROUNDWATER ANALYTICAL RESULTS 17
SUB-SLAB SOIL GAS ANALYTICAL RESULTS 18
FATE AND TRANSPORT OF CONTAMINANTS 21
ABANDONED AND DISCARDED CONTAINERS 21

5. LIKELIHOOD OF OTHER CONTAMINATION 23

6. ALTERNATIVE APPROACHES 24

7. CONCLUSIONS 26

8. REFERENCES 28

List of Attachments

ATTACHMENT A: FIGURES

Figure 1: Site Location Map

Figure 2: Site Plan

Figure 3: Envirologic Sampling Locations

DeLisle Site Map – 2: SVE System Performance

ATTACHMENT B: SITE PHOTOGRAPHS

ATTACHMENT C: MATERIAL SAFETY DATA SHEETS (MSDS)

ATTACHMENT D: *Phase I & II Environmental Site Assessment, Goodwill Industries of SW Michigan,* 2700 N. Pitcher St., Kalamazoo Twp., Michigan, Envirologic Technologies, Inc., June 9, 2009

ATTACHMENT E: NOTICE OF MIGRATION OF CONTAMINATION

Tables

TABLE 1: INTENDED HAZARDOUS SUBSTANCE USE 9-10

TABLE 2: SUMMARY OF ENVIROLOGIC SOIL ANALYTICAL RESULTS 9-10

TABLE 3: SUMMARY OF ENVIROLOGIC GROUNDWATER ANALYTICAL RESULTS 11

TABLE 4: SUMMARY OF ENVIROLOGIC SUB-SLAB SOIL GAS ANALYTICAL RESULTS 11

TABLE 5: SUMMARY OF NEGATIVE PRESSURE READINGS FOR SUB-SLAB SOIL GAS VAPOR SAMPLE POINTS 11

E N V I R O L O G I C
TECHNOLOGIES, INC.

BASELINE ENVIRONMENTAL ASSESSMENT CONDUCTED PURSUANT TO SECTION 20126(1) (C) OF 1994 PA 451, PART 201, AS AMENDED, AND THE RULES PROMULGATED THEREUNDER

2700 N. PITCHER ST.
KALAMAZOO TOWNSHIP
KALAMAZOO COUNTY, MICHIGAN

1. IDENTIFICATION OF AUTHOR AND DATE BEA WAS CONDUCTED AND DATE BEA WAS COMPLETED

Date BEA Conducted: June 9, 2009

Date BEA Completed: June 9, 2009

Author: Envirologic Technologies, Inc.

Prepared by: Erik D. Peterson, Project Manager

Reviewed by: David A. Stegink, Associate Vice President

2. INTRODUCTION

Envirologic Technologies, Inc. (Envirologic) has prepared the following Category S Baseline Environmental Assessment (BEA) of the former Goodwill Industries of SW Michigan property, located at 2700 N. Pitcher St., Kalamazoo Township, Michigan (Figure 1, Attachment A). The BEA was prepared for Brown Family Holdings, LLC and Beckan Industries, Inc. Brown Family Holdings, LLC intends to purchase the subject property and lease the site to Beckan Industries, Inc. in support of precision machining operations. Future machining operations will involve the use of oils and lubricants containing polynuclear aromatic hydrocarbons (PNAs) similar to select "facility" contaminants that have been identified on the subject property. Therefore, this is a Category S BEA.

The subject property consists of one parcel of land occupying approximately 7.3 acres. The site is developed with an approximately 58,500-square-foot warehouse/office building resting on concrete slab on grade. Asphalt cover is in place surrounding the building. A combination of asphalt/concrete cover is also in place over portions of the property located east of the subject building. The remainder of the subject property consists of grass/scrub field and lightly wooded areas. A cellular phone tower is located on the eastern portion of the subject property.

Historic data sources indicate that the site was initially developed by the Upjohn Pharmaceutical Company for warehousing activities sometime prior to 1950. Since approximately 1960, Goodwill Industries of SW Michigan has owned/operated the site. Historic Goodwill site use activities involved the former presence of a gasoline underground storage tank (UST) near the northeast corner of the subject building, as well as the use of tetrachloroethene in support of former dry cleaning operations.

The subject property is identified as an "open" Leaking Underground Storage Tank (LUST) site (ID # 00003454), based upon a gasoline release reported in 2007 (Release # C-0148-07). Previously completed site characterization activities, as well as a Phase II ESA completed by Envirologic in June of 2009, indicate the presence of petroleum-based volatile organic compounds, volatile halocarbons, and metals in soil and groundwater on the subject property at "facility" concentrations. The analytical results demonstrate that the subject property meets the definition of a "facility," as defined by Part 201 of NREPA (1994 PA 451).

This BEA has been performed in accordance with Section 20126(1)(c) of the Natural Resources and Environmental Protection Act (NREPA), Part 9 of the Administrative Rules, developed under the Act and the Michigan Department of Environmental Quality (MDEQ) guidance document *Instructions for Preparing and Disclosing Baseline Environmental Assessments and Section 7a Compliance Analyses* (March 11, 1999).

3. PROPERTY DESCRIPTION & INTENDED HAZARDOUS SUBSTANCE USE

Property Description

The subject property is developed with a 58,500-square-foot building resting on concrete slab on grade. Asphalt cover is in place surrounding the building. A combination of asphalt/concrete cover is also in place over portions of the property located east of the subject building. The remainder of the subject property consists of grass/scrub field and is lightly wooded. A Kalamazoo County drain, the Zantman drain, is present along the eastern boundary of the subject property.

The subject property is located at 2700 N. Pitcher St., Kalamazoo Township, Michigan (subject property). Specifically, the site is located within the Section 3, Township 2S, Range 11W in Kalamazoo Township, Kalamazoo County, Michigan (refer to Figure 1 in Attachment A). The subject property consists of one parcel of land occupying approximately 7.3 acres. The tax identification number and legal description, as provided by Kalamazoo County, are as follows:

2700 N. Pitcher St. (Parcel ID # 06-03-460-010)

1002300 3906 03 460 010 G3-51 2B SEC 3-2-11 COM AT S1/4 POST SEC 3 TH W ALG S LI SD SEC 45.13 FT TO CTR LI PITCHER ST TH N 10DEG 39MIN W THEREON 870.84 FT TH S 89DEG 48MIN E 33.58FT TO E LI SD ST FOR PL BEG TH S 89 DEG 48MIN E 1172.49 FT TO W LI GTW RR ROW TH S 0DEG 31 MIN W THEREON 279.01 FT TH N 89 DEG 48 MIN W 1117.53 FT TO E LI SD ST TH N 10 DEG 39 MIN W THEREON 283.89 FT TO BEG ..... 7.33A CELL TOWER ON 3-904-010

A site plan of the property is presented as Figure 2 in Attachment A. Color photographs of the site are presented as Attachment B.

Intended Hazardous Substance Use

Brown Family Holdings, LLC intends to purchase the subject property and lease the site to Beckan Industries, Inc. Approximately 10,000 square feet on the east end of the subject building will be leased by Goodwill for the warehousing of clothes, shoes and books. Beckan Industries, Inc. will utilize the remainder of the subject building in support of precision machining operations. Future operations will involve sawing, CNC turning/milling, and grinding of steel, aluminum, bronze and zinc for the manufacture of parts in support of the aeronautical industry. Manufacturing activities will involve the use of cutting fluids, way oils and lubricants within saws/CNC equipment. Beckan Industries, Inc. provided Envirologic with Material Safety Data Sheets (MSDS) for the

liquid chemical products to be utilized in the future. The Material Safety Data Sheets are presented as Attachment C. A summary of the intended hazardous substance use is presented in Table 1 below.

Table 1: Intended Hazardous Substance Use

Product	Container Size	Approximate Annual Consumption	Hazardous Ingredient	CAS Number
Voltz II Red	55-gallon drum	18 gallons	1-tetradecene	1120-36-1
			D-limonene	5989-27-5
RUSTILO 4130	55-gallon drum	27.5 gallons	Barium Sulfonate	25619-56-1
			Petroleum Distillate – Highly refined mineral oil	64742-52-5
			Base Oil – highly refined	64742-25-5
				64742-53-6
				64742-54-7
Chevron Hydraulic Oil AW	55-gallon drum	55 gallons	Highly Refined Mineral Oil	Mixture
Rituketa # 7504	55-gallon drum	55 gallons	Mineral Oil Mist	NA
LAD-7503	55-gallon drum	220 gallons	Hyrdrotreated Naphthenic Distillates	64742-52-5
RITELUBE WAY 68	55-gallon drum	110 gallons	Mineral Oil Mist	64742-46-7

As detailed above, the volumes of materials utilized on site annually are relatively low. The rates of consumption of the hazardous substances indicate that the handling of containers (drums) will be very limited. Specifically, one drum each of the Voltz II Red and Rustilo 4130 will last approximately two to three years. The hydraulic oil and Rituketa #7504 drums will only have to be handled once a year. The LAD-7503 and Ritelube Way 68 drums will only be handled on a quarterly or biannual basis.

The mineral oil and naphthenic distillates present as ingredients in select products detailed above are similar to petroleum-based volatile organic compounds and polynuclear aromatic hydrocarbons identified as “facility” contaminants. Therefore, this is a Category S BEA.

It should be noted that volatile halocarbons and gasoline will not be utilized on site in the future. Thus, the future detection of gasoline-related petroleum parameters and volatile halocarbons on the subject property would not be an indication of a new release and could be attributed to historic operations or a result of migration from an off-site source.

4. KNOWN CONTAMINATION

Multiple investigations into the environmental integrity of the subject property have previously been conducted. A summary of the previous investigations is provided below. Refer to the Envirologic Phase I & II ESA (Attachment D) for further details.

Fleis & Vandenbrink completed a Hydrogeologic Investigation of the subject property on behalf of Goodwill in May of 2008. The Fleis & Vandenbrink investigation was completed to address the following areas of concern:

- The lack of documentation or assessment regarding the former presence of a gasoline UST on the subject property;
- The potential for soil and groundwater impact associated with the historic use of a septic system on the subject property;
- The potential for PCBs impact to the subject property from off-site discharge into the Zantman drain present on the eastern portion of the site;
- The historic use of tetrachloroethene on site associated with former dry cleaning operations.

Fleis & Vandenbrink initiated site characterization activities on the subject property at the request of Goodwill in June of 2007. The scope of the investigation included the installation of 37 Geoprobe™ soil borings for the collection of soil and groundwater samples; the installation of two hand-auger borings within the subject building; and the collection of two sediment samples associated with a storm culvert and the Zantman Drain.

Three soil borings were initially installed in the former UST area at that time. A release from the UST was reported to the MDEQ on July 19, 2007 (Release # C-0148-07). The subject property is identified by the MDEQ as an "open" LUST. The release was reported by Fleis & Vandenbrink due to stained soils and petroleum odors encountered in the former pump island location. A total of nine soil borings have been installed northeast of the subject building by Fleis & Vandenbrink to investigate the former gasoline UST vault and dispenser area. Identification of petroleum impact to soil associated with the former gasoline UST has been limited to ethylbenzene, 1,2,4-TMB, 1,3,5-TMB, xylenes and naphthalene at one location in shallow soil beneath the former dispenser (SB-3). The reported concentrations of naphthalene and ethylbenzene exceed the Groundwater-Surface Water Interface Protection (GSIP) criteria. The concentrations of TMBs and xylenes exceed the Drinking Water Protection and GSIP criteria. Concrete

cover remains in place over the former dispenser location (SB-3). It should be noted that tetrachloroethene was also identified in soil in the former UST vault in excess of the Residential Drinking Water Protection criterion.

Four permanent groundwater monitoring wells (MW-1 through MW-4) have been installed northeast of the subject building in order to characterize groundwater conditions relative to the gasoline UST release. The initial groundwater analytical results from 2007 indicated the presence of 1,2,4-TMB, naphthalene and ethylbenzene at concentrations in excess of the Ground-Surface Water Interface (GSI) criteria. The concentration of lead from a temporary groundwater sample collected down gradient of the former UST dispenser exceeded the Residential/Industrial Drinking Water criteria. The concentration of lead at this location (18 ug/L) also exceeded a site specific GSI criterion of 14 ug/L calculated by Fleis & Vandenbrink.

Fleis & Vandenbrink have continued to conduct UST release response activities on behalf of Goodwill. Response activities have consisted of monitoring groundwater conditions within MW-1 through MW-4. The most recent data available is a Quarterly Groundwater Sampling Report dated January 23, 2009. No contaminants of concern were identified above the method detection limit in the groundwater samples. It is the understanding of Envirologic that Fleis & Vandenbrink intend to pursue MDEQ "closure" for the UST release through monitoring of natural attenuation of groundwater contaminants and the placement of use restrictions on the subject property. Use restrictions will presumably consist of prohibiting the development of groundwater as a potable supply and the potential maintenance of impervious cover of limited areas of soil impact.

No indications of PCBs impact associated with sediments from the drainage culvert or Zantman drain were identified.

Volatile halocarbon impact was identified beneath the building in association with former dry cleaning operations and exterior locations associated with the former septic system on the south side of the subject property. Specifically, the concentration of tetrachloroethene identified in soil from two soil samples collected beneath the building exceeded the current Industrial Drinking Water Protection criterion. The concentrations of tetrachloroethene in groundwater from the former septic system leach field exceed the Industrial Drinking Water criterion. The concentration of tetrachloroethene in groundwater along the southern property boundary exceeds both the Industrial Drinking Water criterion and the Groundwater-Surface Water Interface (GSI) criterion. In addition

to tetrachloroethene, the volatile halocarbon degradation products trichloroethene and vinyl chloride were detected in groundwater along the southern property boundary at concentrations in excess of Industrial Drinking Water criteria.

Fleis & Vandenbrink have indicated that vinyl chloride impact to groundwater identified along the western boundary of the subject property is attributable to contaminant migration emanating from the off-site Borroughs property. MDEQ file information indicates the presence of a groundwater monitoring well on the western portion of the subject property (MW-19d) installed to investigate volatile halocarbon groundwater impact emanating onto the subject property from the off-site Borroughs property (3002 N. Burdick St.). The most recent MDEQ file information for the Borroughs site is a 4th Quarter 2008 Groundwater Monitoring Event completed by Fishbeck, Thompson, Carr & Huber. The report presents the analytical results for groundwater monitoring well MW-19d, in addition to the well located down gradient of the former gasoline UST (MW-4). The MW-19d results indicate the presence of vinyl chloride in groundwater in excess of the Industrial Drinking Water criterion. File information indicates that Borroughs is pursuing the placement of a groundwater use restriction on the subject property (Goodwill site) in support of MDEQ "closure" for the release emanating onto the subject property.

Based upon the volatile halocarbon contaminant conditions identified by Fleis & Vandenbrink, Goodwill engaged DeLisle Associates LTD to conduct site characterization activities in association with volatile halocarbon impact on the subject property. A summary of DeLisle investigation activities is provided below. Refer to the *Additional Investigation Activities* and *Site Investigation Report and Interim Response Activities for Soils Beneath the Building* for further details (Appendix F of Attachment D).

DeLisle has installed 41 soil borings across the subject property for the collection of soil and groundwater samples. Select sample locations have been completed with permanent groundwater monitoring wells on the subject property. In addition, seven soil gas sampling wells have been installed within the subject building. The sampling has focused on the following areas: former dry cleaning rooms within the south side of the building; former solvent storage building and septic systems located along the southern property boundary; and the former UST vault area near the northeast corner of the subject building. The volatile halocarbons tetrachloroethene, trichloroethene, cis-1,2-dichloroethene and vinyl chloride were identified in soil beneath the building and exterior former septic system and UST vault locations at concentrations in excess of the

Residential Drinking Water Protection and/or Groundwater-Surface Water Interface Protection (GSIP) criteria. The concentrations of tetrachloroethene in soil beneath the building at two locations proximal to a former dry cleaning room (BH-4, BH-8) are in excess of the Industrial Soil Volatilization to Indoor Air Inhalation criterion.

Based upon the potential for unacceptable health exposures relative to occupancy of the building associated with the concentrations of tetrachloroethene in soil, DeLisle collected three ambient air samples for volatile halocarbons analysis from within the building on November 10, 2008. The sampling activities and results are presented in a report prepared by DeLisle in November of 2008. The following sample locations were selected by DeLisle: the office/administrative area within the western portion of the building, an area of the warehouse to be occupied by Beckan Industries, Inc. in the future, and from within the former dry cleaning room. No recordable levels of contaminants of concern were identified in the three samples. The limited air sampling results indicated that no unacceptable health exposures relative to building occupancy were identified at that time. However, MDEQ guidance indicates that a one-time sampling event is not sufficient to determine that the potential for unacceptable health exposures relative to occupancy of the building does not exist.

DeLisle has completed installation of a Soil Vapor Extraction (SVE) system within the subject building in order to address the contaminant conditions identified beneath the building. The system consists of four (4) two-inch diameter wells with a five-foot screened interval located in southern portions of the building. The system is set up to run each extraction well at 25 SCFM each for a total air flow rate of 100 SCFM. A site plan detailing the SVE system layout along with additional detail on system performance is presented within the DeLisle report. Ongoing operation of the SVE system is intended to achieve two goals: reduction in soil contaminant concentrations through the carbon treatment of soil gas vapors and; creation of a negative pressure environment beneath the building within areas of identified soil impact. Maintenance of negative pressure beneath appropriate portions of the building will preclude the potential for unacceptable health exposures associated with occupancy of the building relative to the volatilization of contaminants to indoor air.

Volatile halocarbon impact to groundwater has also been identified as a result of the DeLisle investigation. Tetrachloroethene and the dehalogenation daughter compounds trichloroethene, cis-1,2-dichlorothene and vinyl chloride have been identified in groundwater across the subject property at concentrations in excess of

Residential/Industrial Drinking Water and/or GSI criteria. The concentrations of volatile halocarbons identified along the southern property boundary, south of the former septic system, indicate that contaminants are migrating beyond the subject property onto the parcel to the south in excess of Residential Drinking Water and/or GSI criteria. Sampling completed by DeLisle included the vertical characterization of groundwater from the following general intervals: 10-12 feet bgl; 19-21 feet bgl; and 35-37 feet bgl. The specific intervals sampled at any one given location may have varied slightly based upon site conditions. Although a potential increase in concentration with depth might be expected for dense non-aqueous phase liquids (DNAPLs) such as volatile halocarbons, no consistent trend to the contaminant concentrations relative to depth was identified. A slight increase in vinyl chloride concentrations at depth was noted for multiple sample locations. The varying ranges of identified contaminant concentrations did not result in exceedances of additional exposure pathways beyond the Drinking Water and GSI Cleanup criteria. As indicated, groundwater impact identified on the western portion of the subject property has been attributed by Fleis & Vandenbrink and DeLisle to the migration of volatile halocarbon impact from the off-site up Borroughs property located hydraulically up gradient.

In addition to the volatile halocarbons, bromomethane was identified in soil beneath the asphalt parking lot on the south side of the building. The concentrations of bromomethane identified in soil exceed the Residential Drinking Water Protection and/or GSI Protection criteria. At this time it is not clear if the bromomethane impact is associated with the former presence of a solvent storage building on the southern portion of the property.

Finally, tetrachlorothene impact to shallow soils in excess of Industrial Drinking Water Protection and/or GSIP criteria was also identified in the former UST vault area near the northeast corner of the subject building.

In order to further characterize site conditions in support of due diligence and “due care” considerations, Envirologic conducted the following Phase II ESA sampling activities: a ground penetrating radar (GPR) geophysical survey was completed on March 2, 2009; the installation of 11 Geoprobe™ soil borings for the collection of soil and groundwater samples was completed on March 3, 2009; the collection of interior sub-slab soil gas samples was completed on two occasions: March 6 and March 11, 2009. Refer to Figure 3, Attachment A for a site plan detailing boring and sampling locations. A summary of

the Phase II ESA sampling results is presented below. Refer to the Phase I & II ESA report (Attachment D) for further details.

The Envirologic soil analytical results are summarized in Table 2, along with a comparison to relevant Residential Cleanup criteria. The Envirologic groundwater analytical results are presented in Table 3, along with a comparison to Residential Cleanup criteria. Based upon the lack of historic plating activities in association with the subject property, the total chromium results are compared to the Residential Cleanup criteria for trivalent chromium (chromium III). Envirologic conducted sub-slab soil gas sampling in order to further evaluate the potential for unacceptable health exposures associated with occupancy of the building. The sub-slab soil gas sampling results are presented in Table 4, along with a comparison to Residential and Industrial Acceptable Soil Gas Screening Concentrations (ASGSCs).

Table 2: Summary of Envirologic Soil Analytical Results & Comparison to Residential Cleanup Criteria

Volatile Organic Compounds																		
Compound	Statewide Default Background Levels	Residential Drinking Water Protection Criteria	Groundwater Surface Water Interface Protection Criteria	Groundwater Contact Protection Criteria	Soil Vol. to Indoor Air Inhalation Criteria	Infinite Source Volatile Soil Inhalation Criteria	Particulate Soil Inhalation Criteria	Residential Direct Contact Criteria	GSB-1 @ 0.5'	GSB-2 @ 0.5'	GSB-3 @ 0.5'	GSB-4 @ 0.5'	GSB-5 @ 0.5'	GSB-6 @ 0.5'	GSB-7 @ 0.5'	GSB-8 @ 0.5'	GSB-9 @ 0.5'	GSB-11 @ 0.5'
Benzene	NA	100	4,000	220,000	1,600	13,000	3.8E+8	180,000	<MDL	<MDL	<MDL	<MDL	<MDL	<MDL	<MDL	<MDL	<MDL	<MDL
Toluene	NA	16,000	2,800	250,000	250,000	2.8E+6	2.7E+10	250,000	<MDL	<MDL	<MDL	<MDL	<MDL	<MDL	<MDL	<MDL	<MDL	<MDL
Ethylbenzene	NA	1,500	360	140,000	87,000	720,000	1.0E+10	140,000	<MDL	<MDL	<MDL	<MDL	<MDL	<MDL	<MDL	<MDL	<MDL	<MDL
Xylenes	NA	5,600	700	150,000	150,000	4.6E+7	2.9E+11	150,000	<MDL	<MDL	<MDL	<MDL	<MDL	<MDL	<MDL	<MDL	<MDL	<MDL
Tetrachloroethene	NA	100	900	88,000	11,000	180,000	5.4E+9	88,000	<MDL	<MDL	<MDL	<MDL	<MDL	<MDL	<MDL	<MDL	<MDL	<MDL
Trichloroethene	NA	100	4,000	440,000	7,100	78,000	1.8E+9	500,000	<MDL	<MDL	<MDL	<MDL	<MDL	<MDL	<MDL	<MDL	<MDL	<MDL
1,2,4-Trimethylbenzene	NA	2,100	570	110,000	110,000	2.1E+7	8.2E+10	110,000	<MDL	<MDL	<MDL	<MDL	<MDL	<MDL	<MDL	<MDL	<MDL	<MDL
1,3,5-Trimethylbenzene	NA	1,800	1,100	94,000	94,000	1.6E+7	8.2E+10	94,000	<MDL	<MDL	<MDL	<MDL	<MDL	<MDL	<MDL	<MDL	<MDL	<MDL
Vinyl Chloride	NA	40	300	20,000	270	4,200	3.5E+8	3,800	<MDL*	<MDL*	<MDL*	<MDL*	<MDL*	<MDL*	<MDL*	<MDL*	<MDL*	<MDL*
All Other VOCs	NA	NA	NA	NA	NA	NA	NA	NA	<MDL	<MDL	<MDL	<MDL	<MDL	<MDL	<MDL	<MDL	<MDL	<MDL

Notes:
1. All sample results in µg/kg (parts per billion)
2. 1 = Reported concentration per Method 8260
2. Result **bolded** where detected, **bolded** and shaded where exceeding applicable cleanup criteria
3. <MDL = Less Than Method Detection Limit, NA = Not Applicable, ND = Not Detected, NLL = Not Likely to Leach, NLV = Not Likely to Volatilize, ID = Insufficient Data to Develop Criterion
4. * = The Method Detection Limit (MDL) for Vinyl Chloride exceeds the Residential Drinking Water Protection criterion
5 Cleanup Criteria from Michigan OP Memo RRD-1, Attachment 1, January 23, 2006

Table 2: Summary of Envirologic Soil Analytical Results & Comparison to Residential Cleanup Criteria (continued)

Polynuclear Aromatic Hydrocarbons																		
Compound	Statewide Default Background Levels	Residential Drinking Water Protection Criteria	Groundwater Surface Water Interface Protection Criteria	Groundwater Contact Protection Criteria	Soil Vol. to Indoor Air Inhalation Criteria	Infinite Source Volatile Soil Inhalation Criteria	Particulate Soil Inhalation Criteria	Residential Direct Contact Criteria	GSB-1 @ 0.5'	GSB-2 @ 0.5'	GSB-3 @ 0.5'	GSB-4 @ 0.5'	GSB-5 @ 0.5'	GSB-6 @ 0.5'	GSB-7 @ 0.5'	GSB-8 @ 0.5'	GSB-9 @ 0.5'	GSB-11 @ 0.5'
Acenaphthene	NA	300,000	4,400	970,000	1.9E+8	8.1E+7	1.4E+10	4.1E+7	<MDL	<MDL	<MDL	**7,200**	<MDL	<MDL	<MDL	<MDL	<MDL	<MDL
Acenaphthylene	NA	5,900	ID	440,000	1.6E+6	2.2E+6	2.3E+9	1.3E+6	<MDL	<MDL	<MDL	<MDL	<MDL	<MDL	<MDL	<MDL	<MDL	<MDL
Anthracene	NA	41,000	ID	41,000	1.0E+9	1.4E+9	6.7E+10	2.3E+8	<MDL	<MDL	<MDL	**35,000**	<MDL	<MDL	**3,600**	<MDL	<MDL	<MDL
Benzo(a)anthracene	NA	NLL	NLL	NLL	NLV	NLV	ID	20,000	<MDL	<MDL	<MDL	**93,000**	<MDL	<MDL	**540**	<MDL	**450**	<MDL
Benzo(a)pyrene	NA	NLL	NLL	NLL	NLV	NLV	1.5E+6	2,000	<MDL	<MDL	<MDL	**100,000**	<MDL	<MDL	**380**	<MDL	**430**	<MDL
Benzo (b) fluoranthene	NA	NLL	NLL	NLL	ID	ID	ID	20,000	<MDL	<MDL	<MDL	**160,000**	<MDL	<MDL	**670**	<MDL	**720**	<MDL
Benzo(ghi)perylene	NA	NLL	NLL	NLL	NLV	NLV	8.0E+8	2.5E+6	<MDL	<MDL	<MDL	**82,000**	<MDL	<MDL	<MDL	<MDL	<MDL	<MDL
Benzo(k)fluoranthene	NA	NLL	NLL	NLL	NLV	NLV	ID	200,000	<MDL	<MDL	<MDL	**44,000**	<MDL	<MDL	<MDL	<MDL	<MDL	<MDL
Chrysene	NA	NLL	NLL	NLL	ID	ID	ID	2.0E+6	<MDL	<MDL	<MDL	**110,000**	<MDL	<MDL	**860**	<MDL	**540**	<MDL
Dibenzo(a,h)anthracene	NA	NLL	NLL	NLL	ID	ID	ID	2,000	<MDL	<MDL	<MDL	**14,000**	<MDL	<MDL	<MDL	<MDL	<MDL	<MDL
Fluoranthene	NA	730,000	5,500	730,000	1.0E+9 (D)	7.4E+8	9.3E+9	4.6E+7	<MDL	<MDL	<MDL	**220,000**	<MDL	<MDL	**2,000**	<MDL	**1,100**	<MDL
Fluorene	NA	390,000	5,300	890,000	5.8E+8	1.3E+8	9.3E+9	2.7E+7	<MDL	<MDL	<MDL	**13,000**	<MDL	<MDL	<MDL	<MDL	<MDL	<MDL
Indeno(1,2,3-cd)pyrene	NA	NLL	NLL	NLL	NLV	NLV	ID	20,000	<MDL	<MDL	<MDL	**100,000**	<MDL	<MDL	<MDL	<MDL	<MDL	<MDL
Naphthalene	NA	35,000	870	2.1E+6	250,000	300,000	2.0E+8	1.6E+7	<MDL	<MDL	<MDL	<MDL	<MDL	<MDL	<MDL	<MDL	<MDL	<MDL
2-Methylnapthalene	NA	57,000	ID	5.5E+6	ID	ID	ID	8.1E+6	<MDL	<MDL	<MDL	<MDL	<MDL	<MDL	<MDL	<MDL	<MDL	<MDL
Phenanthrene	NA	56,000	5,300	1.1E+6	2.8E+6	160,000	6.7E+6	1.6E+6	<MDL	<MDL	<MDL	**130,000**	<MDL	<MDL	**1,600**	<MDL	**540**	<MDL
Pyrene	NA	480,000	ID	480,000	1.0E+9 (D)	6.5E+8	6.7E+9	2.9E+7	<MDL	<MDL	<MDL	**180,000**	<MDL	<MDL	**1,300**	<MDL	**930**	<MDL

Notes:
1. All sample results in µg/kg (parts per billion)
2. Result **bolded** where detected, **bolded** and shaded where exceeding applicable cleanup criteria
3. <MDL = Less Than Method Detection Limit, NA = Not Applicable, NLL = Not Likely to Leach, NLV = Not Likely to Volatilize, ID = Insufficient Data to Develop Criterion
4. D = Calculated criterion exceeds 100 percent, hence it is reduced to 100 percent or 1.0E+9 parts per billion (ppb)
5. Cleanup Criteria from Michigan OP Memo RRD-1, Attachment 1, January 23, 2006

Table 2: Summary of Envirologic Soil Analytical Results & Comparison to Residential Cleanup Criteria (continued)

Metals																		
Compound	Statewide Default Background Levels	Residential Drinking Water Protection Criteria	Groundwater Surface Water Interface Protection Criteria	Groundwater Contact Protection Criteria	Soil Vol. to Indoor Air Inhalation Criteria	Infinite Source Volatile Soil Inhalation Criteria	Particulate Soil Inhalation Criteria	Residential Direct Contact Criteria	GSB-1 @ 0.5'	GSB-2 @ 0.5'	GSB-3 @ 0.5'	GSB-4 @ 0.5'	GSB-5 @ 0.5'	GSB-6 @ 0.5'	GSB-7 @ 0.5'	GSB-8 @ 0.5'	GSB-9 @ 0.5'	GSB-11 @ 0.5'
Aluminum	6.9E+6	1,000	NA	1.0E+9	NLV	NLV	ID	5.0E+7	**4,200,000**	**5,800,000**	**4,400,000**	**2,800,000**	**3,000,000**	**4,900,000**	**4,800,000**	**3,100,000**	**2,800,000**	**5,700,000**
Arsenic	5,800	4,600	70,000	2.0E+6	NLV	NLV	720,000	7,600	**6,000**	**7,800**	**7,100**	**13,000**	**3,700**	**640**	**6,200**	**120,000**	**11,000**	**9,000**
Barium	75,000	1.3E+6	G,X	1.0E+9	NLV	NLV	3.3E+8	3.7E+7	**42,000**	**56,000**	**52,000**	**72,000**	**41,000**	**60,000**	**28,000**	**250,000**	**32,000**	**100,000**
Cadmium	1,200	6,000	G,X	2.3E+8	NLV	NLV	1.7E+6	550,000	**93**	**99**	**150**	**640**	**110**	<MDL	**100**	**870**	**230**	**110**
Chromium	18,000	1.0E+9	G,X	1.0E+9	NLV	NLV	3.3E+8	7.9E+8	**10,000**	**9,300**	**7,200**	**22,000**	**5,800**	**7,700**	**12,000**	**4,800**	**6,900**	**8,000**
Copper	32,000	5.8E+6	G	1.0E+9	NLV	NLV	1.3E+8	2.0E+7	**9,900**	**11,000**	**9,700**	**25,000**	**8,000**	**8,900**	**13,000**	**18,000**	**16,000**	**8,700**
Lead (total)	21,000	700,000	G,X	ID	NLV	NLV	1.0E+8	400,000	**6,900**	**9,500**	**19,000**	**55,000**	**11,000**	**7,600**	**8,200**	**15,000**	**23,000**	**11,000**
Mercury	130	1,700	50	47,000	48,000	52,000	2.0E+7	160,000	<MDL	<MDL	<MDL	<MDL	<MDL	**66**	<MDL	**90**	<MDL	<MDL
Selenium	410	4,000	400	7.8E+7	NLV	NLV	1.3E+8	2.6E+6	<MDL	**320**	**290**	**280**	**280**	<MDL	**240**	**800**	<MDL	**280**
Silver	1,000	4,500	100	2.0E+8	NLV	NLV	6.7E+6	2.5E+6	<MDL	<MDL	<MDL	<MDL	<MDL	<MDL	<MDL	<MDL	<MDL	<MDL
Zinc	47,000	2.4E+6	G	1.0E+9	NLV	NLV	ID	1.7E+8	**21,000**	**24,000**	**26,000**	**140,000**	**30,000**	**18,000**	**35,000**	**62,000**	**65,000**	**42,000**

Notes:
1. All sample results in µg/kg (parts per billion)
2. Result **bolded** where detected, **bolded** and shaded where exceeding applicable cleanup criteria
3. <MDL = Less Than Method Detection Limit, NLV = Not Likely to Volatilize, ID = Insufficient Data to Develop Criterion
4. G = GSI criterion depends on the pH or water hardness, or both; X = GSI criterion not protective of surface water utilized as drinking source
5. Cleanup Criteria from Michigan OP Memo RRD-1, Attachment 1, January 23, 2006

Table 3: Summary of Envirologic Groundwater Analytical Results & Comparison to Residential Cleanup Criteria

Compound	Residential Drinking Water Criteria	Groundwater Surface Water Interface Criteria	Groundwater Volatilization to Indoor Air Inhalation Criteria	Groundwater Contact Criteria	GSB-3 @ 7-11'	GSB-7 @ 3-7'	GSB-10 @ 6-10'
Volatile Organic Compounds (VOCs)							
Tetrachloroethene	5.0	45	25,000	12,000	<MDL	<MDL	**1.7**
Trichloroethene	5.0	200	15,000	22,000	<MDL	<MDL	<MDL
Cis-1,2-dichloroethene	70	620	93,000	200,000	<MDL	**12**	<MDL
Vinyl Chloride	2.0	15	1,100	1,000	**2.3**	**2.8**	<MDL
All other VOCs	NA	NA	NA	NA	<MDL	<MDL	<MDL
Polynuclear Aromatic Hydrocarbons (PNAs)							
All PNAs	NA	NA	NA	NA	<MDL	<MDL	<MDL
Metals							
Arsenic	10	150	NLV	4,300	<MDL	**27**	<MDL
Barium	2,000	G,X	NLV	1.4E+7	**150**	**220**	<MDL
Cadmium	5.0 (A)	G,X	NLV	190,000	<MDL	<MDL	<MDL
Chromium	100 (A)	11	NLV	460,000	<MDL	<MDL	<MDL
Lead	4.0 (L)	G,X	NLV	ID	<MDL	<MDL	<MDL
Selenium	50	5.0	NLV	970,000	<MDL	<MDL	<MDL

Notes:
1. All sample results in µg/L (parts per billion)
2. Result **bolded** where detected, **bolded** and shaded where exceeding applicable cleanup criteria
3. <MDL = Less Than Method Detection Limit, NA = Not Applicable, NLV = Not Likely to Volatilize, ID = Insufficient Data to Develop Criterion
4. A = Criterion is the State of Michigan drinking water standard established pursuant to Section 5 of 1976 PA 399, MCL 325.1005; G = GSI criterion depends on the pH or water hardness, or both; L = Criteria for lead are derived using a biologically based model, as allowed for under Section 20120a(10) of the NREPA, X = GSI criterion not protective of surface water utilized as drinking source
5. Cleanup Criteria from Michigan OP Memo RRD-1, Attachment 1, January 23, 2006

Table 4: Summary of Sub-Slab Analytical Results & Comparison to Acceptable Residential & Industrial Soil Gas Screening Concentrations

Compound	Sub-Slab Residential Acceptable Soil-Gas Screening Concentration	Sub-Slab Industrial Acceptable Soil-Gas Screening Concentration	SUB-1	SUB-2	SUB-3	SUB-4	SUB-5	SUB-6	SUB-7	SUB-8	SUB-9	SUB-10	SUB-11	SUB-12	SUB-13	SUB-14	SUB-15	SUB-16	SUB-17	SUB-18
Tetrachloroethene	310	1,300	**3,200**	**17,000**	**8,200**	**1,600**	**220**	<MDL	<MDL	**11**	**75**	**510**	**4,000**	**75**	**92**	**82**	**320**	<MDL	**25**	<MDL
Trichloroethene	130	540	<MDL	**160**	<MDL	**30**	<MDL	<MDL	<MDL	<MDL	<MDL	<MDL	<MDL	<MDL	<MDL	<MDL	<MDL	<MDL	<MDL	<MDL
Cis-1,2-dichloroethene	450	640	<MDL	<MDL	<MDL	<MDL	<MDL	<MDL	<MDL	<MDL	<MDL	<MDL	<MDL	<MDL	<MDL	<MDL	<MDL	<MDL	<MDL	<MDL
Vinyl Chloride	110	450	<MDL	<MDL	<MDL	<MDL	<MDL	<MDL	<MDL	<MDL	<MDL	<MDL	<MDL	<MDL	<MDL	<MDL	<MDL	<MDL	<MDL	<MDL
All Other VOCs	NA	NA	<MDL	<MDL	<MDL	<MDL	<MDL	<MDL	<MDL	<MDL	<MDL	<MDL	<MDL	<MDL	<MDL	<MDL	<MDL	<MDL	<MDL	<MDL

Notes:
1. All sample results in ppbv (parts per billion by volume)
2.<MDL = less than Method Detection Limit
3. Result **bolded** where detected, **bolded** and shaded where exceeding Residential and/or Industrial Screening Concentrations
4. Acceptable Soil Gas Screening Concentrations (ASGSCs) from MDEQ Op. Memo. No. 4, Appendix B

Soil/Groundwater Analytical Results

No VOCs were identified above the method detection limit in the soil samples collected by Envirologic across the subject property. This is consistent with the field observations and lack of PID responses noted during sample collection. It should be noted that the method detection limit for vinyl chloride was elevated in the soil samples. The elevated reporting limits exceed the Residential Drinking Water Protection criterion. However, the elevated reporting limits do not exceed additional Residential Cleanup criteria.

The detection of VOCs in groundwater was limited to the volatile halocarbons tetrachloroethene, cis-1,2-dichloroethene and vinyl chloride. Tetrachloroethene was detected below Residential Cleanup criteria near the northeast corner of the subject building (GSB-10). Cis-1,2-dichloroethene was detected below Residential Cleanup criteria southeast of the subject building (GSB-7). Vinyl chloride was identified in groundwater above the Residential Drinking Water criterion west (GSB-3) and southeast (GSB-7) of the subject building. The detection of volatile halocarbons in groundwater is consistent with the previously identified contaminant conditions on the subject property.

The detection of PNAs in soil was limited to three boring locations: GSB-4, GSB-7 and GSB-9. The concentrations of the select PNAs identified in borings GSB-7 and GSB-9 do not exceed Residential Cleanup criteria. The concentrations of select PNAs in boring GSB-4 exceed the Groundwater-Surface Water Interface Protection (GSIP) criteria and/or the Residential Direct Contact criteria. As indicated, boring GSB-4 was installed at an exterior location west of the subject building. No odors or staining of the soil were noted at this location during sample collection. The presence of PNAs in the soil sample at this location may be attributable to fill material encountered in shallow soils within the boring. No PNAs were identified in any of the groundwater samples collected on the subject property. The lack of detection of PNAs in groundwater down gradient of GSB-4 would appear to indicate that PNAs are not leaching from soil to groundwater.

Metals were identified in all soil samples collected across the subject property. With the exception of arsenic, chromium, lead and zinc at select locations, the reported concentrations of metals were below State Wide Default Background Levels. The reported concentrations of arsenic at the majority of the sample locations exceeded the Residential Drinking Water Protection and/or Residential Direct Contact criteria. The concentration of selenium in soil at location GSB-8 is in excess of the Groundwater-Surface Water Interface Protection criterion. The concentrations of chromium in zinc in

soil do not exceed Residential Cleanup criteria. The detection of metals in groundwater was limited to arsenic from boring GSB-7 and barium from borings GSB-3 and GSB-7. The reported concentration of arsenic from GSB-7 is in excess of the Residential Drinking Water criterion. The reported concentrations of barium in groundwater do not exceed Residential Drinking Water criteria.

Sub-slab Soil Gas Analytical Results

Tetrachloroethene was identified above the method detection limit in the majority of the samples. The concentration of tetrachloroethene at five sample locations exceeds the Sub-Slab Industrial Acceptable Soil Gas Screening Concentration (ASGSC). Excedances of the Industrial ASGSC are focused around the perimeter of the easternmost former dry cleaning room (SUB-1 through SUB-4) and one sample point between the two former dry cleaning areas (SUB-11). The concentration of tetrachloroethene detected at sample location SUB-15 exceeds the Residential ASGSC, but not the Industrial ASGSC. Trichloroethene was identified at two sample locations (SUB-2 and SUB-4). The reported concentration of trichloroethene at location SUB-2 exceeds the Residential ASGSC. No additional VOCs were identified above the method detection limit in the sub-slab soil gas samples.

An exceedance of the Industrial ASGSC for tetrachloroethene in association with former dry cleaning areas indicates the potential for unacceptable health exposures associated with future occupancy of the building relative to the volatilization of contaminants to indoor air. DeLisle has completed the installation of a soil vapor extraction (SVE) system on behalf of Goodwill to address the contaminant conditions identified beneath the building. It is the understanding of Envirologic that completion and ongoing operation of an appropriate SVE system represents an acceptable remedy to address the identified contaminant conditions beneath the building. Specifically, it is the understanding of Envirologic that ongoing operation of an SVE system with a radius of influence encompassing all areas of identified sub-slab soil gas ASGSC exceedances would satisfy “due care” obligations for Brown Family Holdings, LLC and Beckan Industries, Inc. as future owner/operator of the subject property. In order to evaluate the radius of influence for the SVE system, Envirologic obtained negative pressure readings (inches of water) utilizing a Magnehelic negative pressure gauge from each of the sub-slab soil gas sample points. A summary of the negative pressure readings obtained on April 2nd, 2009 is provided in Table 5 below.

Table 5: Summary of Negative Pressure Readings for Sub-Slab Soil Gas Vapor Sample Points

Location	SUB-1	SUB-2	SUB-3	SUB-4	SUB-5	SUB-6	SUB-7	SUB-8	SUB-9	SUB-10	SUB-11	SUB-12	SUB-13	SUB-14	SUB-15	SUB-16	SUB-17	SUB-18
Negative Pressure (Inches of Water) (4/2/09)	0.15	0.02	0.04	0.04	0.02	0.0	0.0	0.0	0.05	0.06	0.32	0.0	0.12	0.0	0.0	0.0	0.0	0.0

Vinyl Chloride	75014
Bromomethane	74839
Naphthalene	91203
Ethylbenzene	100414
1,2,4-trimethylbenzene	95636
1,3,5-trimethylbenzene	108678
Xylenes	1330207
Arsenic	7440382
Selenium	7782492

The presence of volatile halocarbons beneath the subject building and in association with the abandoned septic system have been attributed to historic dry cleaning activities formerly conducted on the subject property. Volatile halocarbon impact to groundwater on western portions of the subject property is attributable to contaminant migration from the off-site Borroughs property.

Fate and Transport of Contaminants

Previously completed hydrogeologic investigation activities conducted by Fleis & Vandenbrink indicate a southeasterly groundwater flow direction on the subject property. Based upon the analytical results from groundwater samples collected along the southern property boundary, volatile halocarbons are emanating from the subject property to the adjacent parcel to the south. Specifically, tetrachloroethene, trichloroethene, cis-1,2-dichloroethene and vinyl chloride have been identified in groundwater along the southern boundary of the subject property at concentrations in excess of the Residential Drinking Water and/or GSI criteria. Based upon the groundwater analytical data, a Notice of Migration of Contamination has been completed for the adjacent parcel to the south on behalf of Brown Family Holdings, LLC. The Notice of Migration of Contamination is presented as Attachment E.

Abandoned and Discarded Containers

A 5,000-gallon gasoline underground storage tank (UST) was removed from the subject property in April of 1987. Mr. John Dillworth of Goodwill reports no knowledge of additional USTs in association with the subject property. No indications of the presence of additional underground storage tanks (vent pipes, fill ports, pumps) were observed during the Phase I ESA site inspections. No records of additional USTs in association with the subject property were on file with the MDEQ or the Kalamazoo Township Fire Department. However, Kalamazoo Township Fire Chief Farr recalled that a heating oil UST may have been associated with the subject property, in addition to the identified gasoline UST. No specific record of an additional UST exists in the Township Fire

Department files. The concern regarding a potential additional tank was based solely upon the recollection of Chief Farr that such a tank may have historically been used.

In order to investigate the potential for an additional UST to remain on the subject property, Envirologic oversaw the completion of a ground-penetrating radar (GPR) geophysical survey of portions of the subject property. The GPR survey report is presented as Appendix H of the Phase I & II ESA (Attachment D). The survey included a 30-foot-wide area around the perimeter of the subject building, an 80-foot by 80-foot area in the northeast corner of the building, and a 100-foot by 100-foot area associated with a former solvent storage building on the south side of the subject property. Particular attention was focused on the northeast corner of the building, based upon the historic use of a boiler room in the northeast corner of the structure. It has been presumed that the potential presence of a heating oil UST is most likely in close proximity to the former boiler room. No indications of the presence of additional UST system structures were identified as a result of the GPR survey.

Based upon available documentation and the completed GPR survey, no abandoned or discarded containers are associated with the subject property.

5. LIKELIHOOD OF OTHER CONTAMINATION

As indicated, multiple environmental investigations have previously been conducted on the subject property. A Phase I ESA was completed for the subject property by Envirologic in April of 2009 (Attachment D). The Phase I was conducted in accordance with the ASTM standard practice for Phase I ESAs (standard E1527-05). The ESA included a site inspection and a thorough review of all available historic data sources, including aerial photographs, historic contacts, site uses and site ownership. All areas of concern identified in the Phase I have been characterized through the course of the multiple site investigations.

In addition to the "facility" contaminants identified above, the metal lead was historically detected in groundwater by Fleis & Vandenbrink in excess of the Residential/Industrial Drinking Water criteria and a site-specific GSI criterion. The detection of lead in groundwater was from a sampling location down gradient of the former gasoline UST. Lead has not been identified in the most recent groundwater sampling events. However, the potential exists that it may be identified in the future at a concentration in excess of current Part 201 cleanup criteria. Additionally, toluene was identified in groundwater on the subject property below Residential Cleanup criteria during the Envirologic Phase II ESA.

Due to the ongoing dehalogenation of tetrachloroethene, the potential exists that daughter compounds trichloroethene, cis-1,2,-dichloroethene and vinyl chloride may be identified at locations or concentrations not previously identified. Based upon the fact that volatile halocarbons will not be utilized on the site by Brown Family Holdings, LLC and Beckan Industries, Inc., the future detection of volatile halocarbons on the subject property would not be an indication of a new release and could be attributed to historic operations or migration from an off-site source.

Sediment sampling completed by Fleis & Vandenbrink did not identify polychlorinated biphenyls (PCBs) impact. Based upon the fact that PCBs will not be utilized on site by Brown Family Holdings, LLC and Beckan Industries, Inc., the future detection of PCBs on the subject property would not be an indication of a new release and could be attributed to historic operations.

6. ALTERNATIVE APPROACHES

Brown Family Holdings, LLC and Beckan Industries, Inc. will utilize the asphalt cover of the parking/drive areas as well as the concrete cover of the shipping/receiving bay and building floor as an engineering control. All hazardous substance delivery, storage and use will occur over impervious cover and be readily apparent and thus, response activities can be conducted in a timely manner so as to prevent commingling with the existing contamination. Future site operations will employ engineering controls in the form of impervious cover and secondary containment container racks, as well as chemical handling practices and emergency response measures.

As detailed above, the volumes of hazardous substances that will be utilized on site annually are relatively low. The rates of consumption of the hazardous substances indicate that the handling of containers (drums) will be very limited. Specifically, one drum each of the Voltz II Red and Rustilo 4130 will last approximately two to three years. The hydraulic oil and Rituketa #7504 drums will only have to be handled once a year. The LAD-7503 and Ritelube Way 68 drums will only be handled on a quarterly or biannual basis.

All chemical storage and use will take place within the subject building. At no time will chemical containers be staged on exterior portions of the subject property. Chemical containers will be unloaded inside the building from within the shipping/receiving bay located on the west side of the subject building. The shipping/receiving bay has a concrete floor that will serve as an engineering control to prevent a potential surficial release from reaching the subsurface. Chemical containers will be staged within a secondary containment unit within the building. The 55-gallon drums will remain within the secondary containment unit and smaller quantities of products will be drawn from the drums into small containers and transported within the building to specific work stations/equipment as necessary. Similar to the shipping/receiving area, the concrete floor of the building where machining operations will take place will also serve as an engineering control to prevent a potential release from reaching the subsurface.

Waste material generated on site will consist of scrap metal and shavings associated with the machining process. Scrap metal and shavings will be stored within a $10yd^3$ container staged within the building prior to be taken off-site for recycling. Beckan Industries, Inc. anticipates that the volume of scrap/shavings generated on site will require emptying the container approximately once a month.

The identified storage and handling procedures will prevent and/or contain potential releases and spills. Additionally, Brown Family Holdings, LLC and Beckan Industries, Inc. will maintain spill response materials such as absorbent material and socks placed in various locations throughout the

building where hazardous substances will be stored, used, or otherwise handled. Used absorbent materials will be properly containerized and disposed. Telephone numbers for appropriate emergency response situations (e.g., local fire department, spill response contractors, transporters, and disposal facilities) will be maintained on site.

Brown Family Holdings, LLC and Beckan Industries, Inc. acknowledge that if there is a failure of an engineering control or similar feature identified in the BEA, and if a release occurs as a result of the failure, the BEA does not provide an exemption to liability for response activity necessary to address contamination resulting from the failure. The burden of distinguishing the release attributable to the failure of the engineering control from existing contamination shall be borne by the submitter according to Section 29 of Part 201.

Volatile halocarbons and gasoline-related petroleum compounds will not be utilized on the subject property in the future. Therefore, the future detection of volatile halocarbons or gasoline-related petroleum compounds would not be an indication of a new release and could be attributed to historic operations or migration from an off-site source.

7. CONCLUSIONS

Historic data sources indicate that the site was initially developed by the Upjohn Pharmaceutical Company for warehousing activities sometime prior to 1950. Since approximately 1960, Goodwill Industries of SW Michigan has owned/operated the site. Historic Goodwill site use activities involved the former presence of a gasoline underground storage tank near the northeast corner of the subject building as well as the use of tetrachloroethene in support of former dry cleaning operations.

The subject property is identified as an "open" Leaking Underground Storage Tank (LUST) site (ID # 00003454), based upon a gasoline release reported in 2007 (Release # C-0148-07). Previously completed site characterization activities, as well as a Phase II ESA completed by Envirologic in June of 2009 indicate the presence of petroleum-based volatile organic compounds, volatile halocarbons and metals in soil and groundwater on the subject property at "facility" concentrations. The analytical results demonstrate that the subject property meets the definition of a "facility," as defined by Part 201 of NREPA (1994 PA 451). A summary of the "facility" contaminants and their respective CAS numbers is presented below.

Hazardous Substance	CAS Number
Tetrachloroethene	127184
Trichloroethene	79016
Cis-1,2-dichloroethene	156592
Vinyl Chloride	75014
Bromomethane	74839
Naphthalene	91203
Ethylbenzene	100414
1,2,4-trimethylbenzene	95636
1,3,5-trimethylbenzene	108678
Xylenes	1330207
Arsenic	7440382
Selenium	7782492

Brown Family Holdings, LLC intends to purchase the subject property and lease the site to Beckan Industries, Inc. in support of precision machining operations. Future machining operations will involve the use of oils and lubricants containing polynuclear aromatic hydrocarbons (PNAs) similar to select "facility" contaminants that have been identified on the subject property. Therefore, this is a Category S BEA.

Brown Family Holdings, LLC and Beckan Industries, Inc. will utilize the asphalt cover of the parking/drive areas, as well as the concrete cover of the shipping/receiving bay and building floor as an engineering control. All hazardous substance delivery, storage and use will occur over impervious cover and be readily apparent and thus, response activities can be conducted in a timely manner so as to prevent commingling with the existing contamination. Future site operations will employ engineering controls in the form of impervious cover and secondary containment container racks, as well as chemical handling practices, and emergency response measures.

Brown Family Holdings, LLC and Beckan Industries, Inc. acknowledge that if there is a failure of an engineering control or similar feature identified in the BEA, and if a release occurs as a result of the failure, the BEA does not provide an exemption to liability for response activity necessary to address contamination resulting from the failure. The burden of distinguishing the release attributable to the failure of the engineering control from existing contamination shall be borne by the submitter according to Section 29 of Part 201.

Volatile halocarbons and gasoline-related petroleum compounds will not be utilized on the subject property in the future. Therefore, the future detection of volatile halocarbons or gasoline-related petroleum compounds would not be an indication of a new release and could be attributed to historic operations or migration from an off-site source.

8. REFERENCES

Instructions for Preparing and Disclosing Baseline Environmental Assessments and Section 7a Compliance Analyses, Michigan Department of Environmental Quality, March 11, 1999.

Part 201Generic Cleanup Criteria and Screening Levels, MDEQ-RRD Operational Memorandum #1, January 23, 2006.

Phase I & II Environmental Site Assessment, Goodwill Industries of SW Michigan, Inc., 2700 N. Pitcher St., Kalamazoo Township, Michigan, Envirologic Technologies, Inc., June 9, 2009.

As detailed in Table 5, a negative pressure reading was obtained from each sample point for which an exceedance of the Industrial ASGSC was identified. The negative pressure readings indicate that operation of the SVE system precludes the potential for unacceptable health exposures relative to occupancy of the building.

As indicated, DeLisle completed additional investigation activities on the subject property in May of 2009. The results of the investigation were presented to the MDEQ in June of 2009 (Appendix F of Attachment D). The investigation was conducted to further characterize contaminant conditions beneath the building and evaluate the performance of the SVE system. The investigation involved the installation of 13 additional borings within the building for the collection of soil samples. The soil samples were collected to delineate the extent of soil impact in excess of Volatilization to Indoor Air criteria. Seven soil gas wells were installed within select soil borings. The soil gas wells were installed with a one-foot screen set to straddle the five-foot bgl interval. The screen depth was selected in order to provide an opportunity to evaluate soil gas from an interval deeper than the sub-slab samples collected by Envirologic during the Phase II ESA. The soil gas wells also served as monitoring points to measure vacuum influence of the SVE system. The results of the investigation demonstrate that the extent of impact to soil in excess of the Volatilization to Indoor Air Inhalation criteria has been achieved. The investigation further demonstrates that the radius of influence for each of the four vapor extraction wells exceeds the initial estimate of 30 feet. The DeLisle results indicate a negative pressure reading in association with all sub-slab soil gas sampling points for which an exceedance of soil volatilization to indoor air inhalation was identified. A figure prepared by DeLisle depicting the negative pressure readings as well as the radius of influence around the each of the four extraction wells is presented in Attachment A. The completed documentation presented in the DeLisle report demonstrates that operation of the SVE system results in creating the negative pressure beneath the building required to serve as a presumptive remedy ensuring that no unacceptable health exposures will occur associated with occupancy of the building relative to the volatilization of contaminants to indoor air. Refer to the DeLisle report in Appendix F of the Phase I ESA for further documentation of SVE system performance.

The analytical results from the previously completed site characterization activities, as well as the Envirologic Phase II ESA demonstrate that the subject property meets the definition of a “facility” as defined by Part 201 of NREPA. A summary of the “facility” contaminants and their respective CAS numbers is presented below.

Hazardous Substance	CAS Number
Tetrachloroethene	127184
Trichloroethene	79016
Cis-1,2-dichloroethene	156592

ATTACHMENT A

FIGURES

Figure 1: Site Location Map
Figure 2: Site Plan
Figure 3: Envirologic Sampling Locations
DeLisle Site Map - 2: SVE System Performance

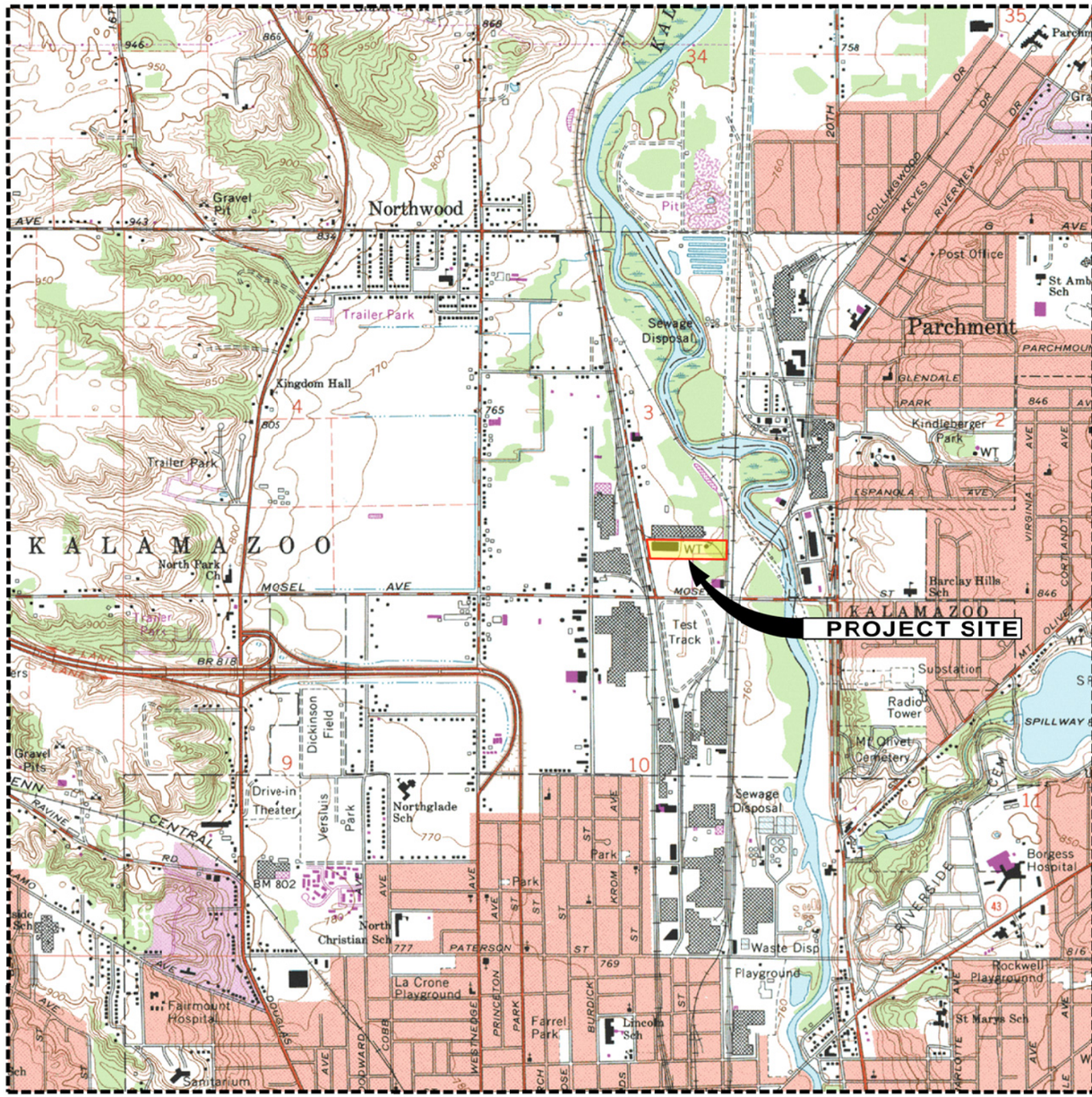

SOURCE: CONSTANTINE, MICHIGAN USGS 7.5 MINUTE TCPOGRAPHIC QUADRANGLE MAPS
MAPTECH1© U.S. TERRAIN SERIES™ ®MAPTECH©, INC. 606-433-8500

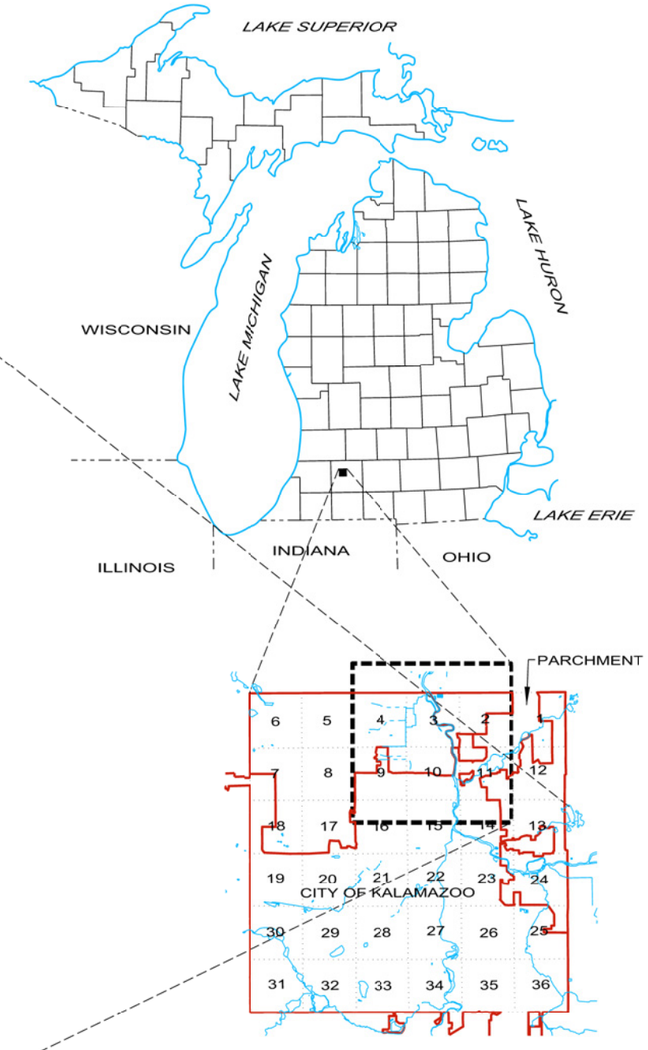

T 2 S. R. 11 W.
KALAMAZOO TOWNSHIP
KALAMAZOO COUNTY, MICHIGAN

N
W E
S

0 500 1000 2000 4000
SCALE 1" = 2000'

FORMER GOODWILL INDUSTRIES OF SOUTHWEST MICHIGAN

2700 NORTH PITCHER STREET
KALAMAZOO, MICHIGAN 49009

LOCATION MAP

ENVIROLOGIC TECHNOLOGIES, INC.
2960 INTERSTATE PARKWAY
KALAMAZOO, MICHIGAN 49048
PH: (269) 342-1100 FAX: (269) 342-4945

PROJECT NO. 080503
FIGURE NO: 1

KZOOCO 080503_080503_Site_Plan.dgn, Location Map

NOTE:
THIS IS NOT A PROPERTY BOUNDARY SURVEY, PROPERTY BOUNDARIES SHOWN ON THIS MAP ARE BASED ON AVAILABLE FURNISHED INFORMATION. BOUNDARIES SHOWN ARE APPROXIMATE ONLY AND SHOULD NOT BE USED TO ESTABLISH PROPERTY BOUNDARY LOCATION IN THE FIELD.

NOTE: AERIAL PHOTOGRAPHY: 2007 COLOR ORTHOPHOTO, OBTAINED FROM THE CITY OF KALAMAZOO ON LINE GIS VIEWER.

N
W E
S

SCALE 1" = 100'
0 50 100 200

FORMER GOODWILL INDUSTRIES OF SOUTHWEST MICHIGAN

2700 NORTH PITCHER STREET
KALAMAZOO, MICHIGAN 49004

SITE PLAN

ENVIROLOGIC TECHNOLOGIES, INC.
2960 INTERSTATE PARKWAY
KALAMAZOO, MICHIGAN 49048
PH: (269) 342-1100 FAX: (269) 342-4945

PROJECT NO. 080503

FIGURE No. 2

KZOOCO 080503_080503_Site_Plan.dgn, Site Plan A

LEGEND

- GEOPROBE® SOIL BORING LOCATIONS
- SUB-SLAB VAPOR SAMPLE LOCATIONS

NOTE: INTERNAL BUILDING LAYOUT TAKEN FROM FURNISHED BUILDING PLAN.

N
W E
S

SCALE 1" = 50'
0 10 20 30 40 50 100

NOTE: AERIAL PHOTOGRAPHY: 2007 COLOR ORTHOPHOTO, OBTAINED FROM THE CITY OF KALAMAZOO ON LINE GIS VIEWER.

NOTE:
THIS IS NOT A PROPERTY BOUNDARY SURVEY, PROPERTY BOUNDARIES SHOWN ON THIS MAP ARE BASED ON AVAILABLE FURNISHED INFORMATION. BOUNDARIES SHOWN ARE APPROXIMATE ONLY AND SHOULD NOT BE USED TO ESTABLISH PROPERTY BOUNDARY LOCATION IN THE FIELD.

FORMER GOODWILL INDUSTRIES OF SOUTHWEST MICHIGAN

2700 NORTH PITCHER STREET
KALAMAZOO, MICHIGAN 49004

SAMPLING LOCATIONS

ENVIROLOGIC TECHNOLOGIES, INC.
2960 INTERSTATE PARKWAY
KALAMAZOO, MICHIGAN 49048
PH: (269) 342-1100 FAX: (269) 342-4945

PROJECT NO. 080503

FIGURE No. 3

KZOOCO 080503_080503_Site_Plan.dgn, Site Plan B

DeLisle Associates LTD

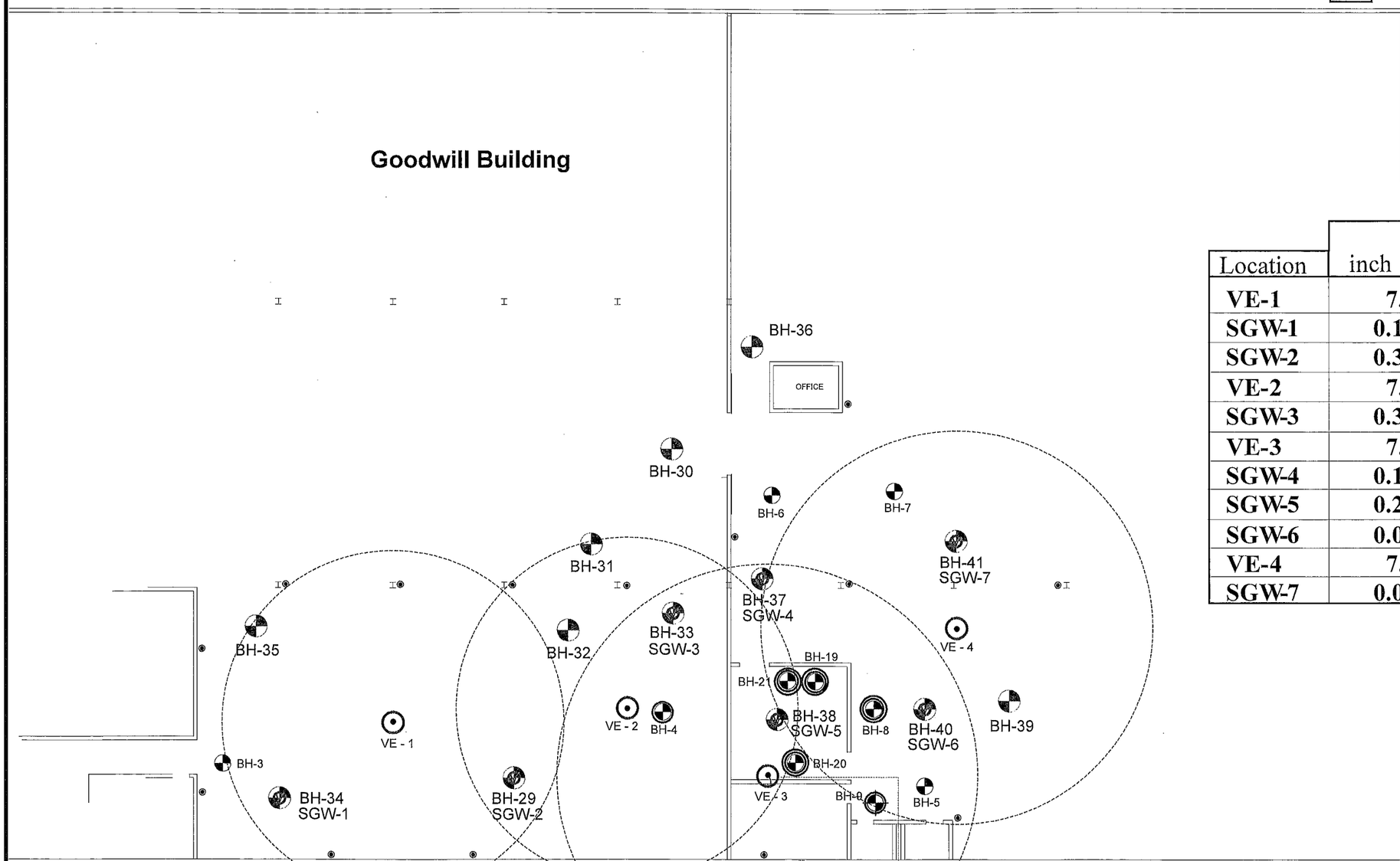

Location	Vacuum inch H_2O	Vacuum CFM
VE-1	7.0	~20-25
SGW-1	0.135	---
SGW-2	0.330	---
VE-2	7.0	~20-25
SGW-3	0.330	---
VE-3	7.0	~20-25
SGW-4	0.145	---
SGW-5	0.235	---
SGW-6	0.030	---
VE-4	7.1	~20-25
SGW-7	0.055	---

LEGEND

- BH-35 — Soil Borings BH-29 to BH-41 Conducted in May 2009
- BH-29 SGW-2 — Soil Boring with Soil Gas Well installed.
- VE - 1 — Soil Vapor Extraction Well
- Air Vent (14)
- Soil sample with PCE and TCE exceeding Indoor Air Criteria
- Soil sample with PCE exceeding Indoor Air Criteria
- Vapor Extraction Well Minimum Radius of Influence

N

Scale 1"=20 ft

5 10

SITE MAP -2

Vapor Extraction Radius of Influence

Goodwill Industries of SW Michigan
2700 North Pitcher Street
Kalamazoo, Michigan

May 29, 2009

ATTACHMENT B

SITE PHOTOGRAPHS

West Side of Subject Building

Southern Property Boundary, Facing West

Northern Property Boundary, Facing West

East Side of Subject Building

Former UST Vault Area

Former UST Dispenser Location

Concrete Cover, East of Subject Building

Two-Track on Eastern Portion of the Property

Fence/Gate Near Southeast Corner of Building

Shipping/Receiving Bay to be Utilized by Beckan Industries

Typical Office Space

Typical Office Space

Warehouse Space

Warehouse Space

Warehouse Space

Water Tower

Miscellaneous Storage in Bay on East Side of Building

Former Goodwill Retail Area

Former Dry Cleaning Room

Debris on Eastern Portions of the Subject Property

Debris on Eastern Portions of the Subject Property

Debris on Eastern Portions of the Subject Property

Debris on Eastern Portions of the Subject Property

Zantman Drain

Base of Water Tower

Material Safety Data Sheet

SECTION 1 PRODUCT AND COMPANY IDENTIFICATION

Chevron Hydraulic Oil AW

Product Use: Hydraulic Oil
Product Number(s): CPS255673, CPS255674, CPS255675
Synonyms: Chevron Hydraulic Oil AW ISO 32, Chevron Hydraulic Oil AW ISO 46, Chevron Hydraulic Oil AW ISO 68

Company Identification
Chevron Products Company
a division of Chevron U.S.A. Inc.
6001 Bollinger Canyon Road
San Ramon, CA 94583
United States of America
www.chevronlubricants.com

LAD CLEANING SOLUTIONS, INC.
P.O. Box 316 950 Industrial Parkway
Plainwell, MI 49080
269-685-6839 • 1-800-783-6839 • Fax 269-685-1287

Transportation Emergency Response
CHEMTREC: (800) 424-9300 or (703) 527-3887
Health Emergency
Chevron Emergency Information Center: Located in the USA. International collect calls accepted. (800) 231-0623 or (510) 231-0623
Product Information
email : lubemsds@Chevron.com
Product Information: (800) LUBE TEK
MSDS Requests: (800) 414-6737

SECTION 2 COMPOSITION/ INFORMATION ON INGREDIENTS

COMPONENTS	CAS NUMBER	AMOUNT
Highly refined mineral oil (C15 - C50)	Mixture	90 - 100 %weight

SECTION 3 HAZARDS IDENTIFICATION

IMMEDIATE HEALTH EFFECTS
Eye: Not expected to cause prolonged or significant eye irritation.
Skin: Contact with the skin is not expected to cause prolonged or significant irritation. Not expected to be harmful to internal organs if absorbed through the skin. High-Pressure Equipment Information: Accidental high-velocity injection under the skin of materials of this type may result in serious injury. Seek medical attention at once should an accident like this occur. The initial wound at the injection site may not appear to be serious at first; but, if left untreated, could result in disfigurement or amputation of the affected part.

Ingestion: Not expected to be harmful if swallowed.
Inhalation: Not expected to be harmful if inhaled. Contains a petroleum-based mineral oil. May cause respiratory irritation or other pulmonary effects following prolonged or repeated inhalation of oil mist at airborne levels above the recommended mineral oil mist exposure limit. Symptoms of respiratory irritation may include coughing and difficulty breathing.

SECTION 4 FIRST AID MEASURES

Eye: No specific first aid measures are required. As a precaution, remove contact lenses, if worn, and flush eyes with water.
Skin: No specific first aid measures are required. As a precaution, remove clothing and shoes if contaminated. To remove the material from skin, use soap and water. Discard contaminated clothing and shoes or thoroughly clean before reuse.
Ingestion: No specific first aid measures are required. Do not induce vomiting. As a precaution, get medical advice.
Inhalation: No specific first aid measures are required. If exposed to excessive levels of material in the air, move the exposed person to fresh air. Get medical attention if coughing or respiratory discomfort occurs.
Note to Physicians: In an accident involving high-pressure equipment, this product may be injected under the skin. Such an accident may result in a small, sometimes bloodless, puncture wound. However, because of its driving force, material injected into a fingertip can be deposited into the palm of the hand. Within 24 hours, there is usually a great deal of swelling, discoloration, and intense throbbing pain. Immediate treatment at a surgical emergency center is recommended.

SECTION 5 FIRE FIGHTING MEASURES

Leaks/ruptures in high pressure system using materials of this type can create a fire hazard when in the vicinity of ignition sources (eg. open flame, pilot lights, sparks, or electric arcs).

FIRE CLASSIFICATION:
OSHA Classification (29 CFR 1910.1200): Not classified by OSHA as flammable or combustible.

NFPA RATINGS: Health: 0 Flammability: 1 Reactivity: 0

FLAMMABLE PROPERTIES:
Flashpoint: (Cleveland Open Cup) 170 °C (338 °F) (Min)
Autoignition: No Data Available
Flammability (Explosive) Limits (% by volume in air): Lower: Not Applicable Upper: Not Applicable

EXTINGUISHING MEDIA: Use water fog, foam, dry chemical or carbon dioxide (CO_2) to extinguish flames.
PROTECTION OF FIRE FIGHTERS:
Fire Fighting Instructions: This material will burn although it is not easily ignited. For fires involving this material, do not enter any enclosed or confined fire space without proper protective equipment, including self-contained breathing apparatus.
Combustion Products: Highly dependent on combustion conditions. A complex mixture of airborne solids, liquids, and gases including carbon monoxide, carbon dioxide, and unidentified organic compounds will be evolved when this material undergoes combustion.

SECTION 6 ACCIDENTAL RELEASE MEASURES

Protective Measures: Eliminate all sources of ignition in vicinity of spilled material.
Spill Management: Stop the source of the release if you can do it without risk. Contain release to prevent further contamination of soil, surface water or groundwater. Clean up spill as soon as possible, observing precautions in Exposure Controls/Personal Protection. Use appropriate techniques such as applying non-combustible absorbent materials or pumping. Where feasible and appropriate, remove contaminated soil. Place contaminated materials in disposable containers and dispose of in a manner consistent with applicable regulations.
Reporting: Report spills to local authorities and/or the U.S. Coast Guard's National Response Center at (800) 424-8802 as appropriate or required.

SECTION 7 HANDLING AND STORAGE

Precautionary Measures: DO NOT USE IN HIGH PRESSURE SYSTEMS in the vicinity of flames, sparks and hot surfaces. Use only in well ventilated areas. Keep container closed.

General Handling Information: Avoid contaminating soil or releasing this material into sewage and drainage systems and bodies of water.
Static Hazard: Electrostatic charge may accumulate and create a hazardous condition when handling this material. To minimize this hazard, bonding and grounding may be necessary but may not, by themselves, be sufficient. Review all operations which have the potential of generating and accumulating an electrostatic charge and/or a flammable atmosphere (including tank and container filling, splash filling, tank cleaning, sampling,

gauging, switch loading, filtering, mixing, agitation, and vacuum truck operations) and use appropriate mitigating procedures. For more information, refer to OSHA Standard 29 CFR 1910.106, 'Flammable and Combustible Liquids', National Fire Protection Association (NFPA 77, 'Recommended Practice on Static Electricity', and/or the American Petroleum Institute (API) Recommended Practice 2003, 'Protection Against Ignitions Arising Out of Static, Lightning, and Stray Currents'.

Container Warnings: Container is not designed to contain pressure. Do not use pressure to empty container or it may rupture with explosive force. Empty containers retain product residue (solid, liquid, and/or vapor) and can be dangerous. Do not pressurize, cut, weld, braze, solder, drill, grind, or expose such containers to heat, flame, sparks, static electricity, or other sources of ignition. They may explode and cause injury or death. Empty containers should be completely drained, properly closed, and promptly returned to a drum reconditioner or disposed of properly.

SECTION 8 EXPOSURE CONTROLS/PERSONAL PROTECTION

GENERAL CONSIDERATIONS:

Consider the potential hazards of this material (see Section 3), applicable exposure limits, job activities, and other substances in the work place when designing engineering controls and selecting personal protective equipment. If engineering controls or work practices are not adequate to prevent exposure to harmful levels of this material, the personal protective equipment listed below is recommended. The user should read and understand all instructions and limitations supplied with the equipment since protection is usually provided for a limited time or under certain circumstances.

ENGINEERING CONTROLS:

Use in a well-ventilated area.

PERSONAL PROTECTIVE EQUIPMENT

Eye/Face Protection: No special eye protection is normally required. Where splashing is possible, wear safety glasses with side shields as a good safety practice.

Skin Protection: No special protective clothing is normally required. Where splashing is possible, select protective clothing depending on operations conducted, physical requirements and other substances in the workplace. Suggested materials for protective gloves include: 4H (PE/EVAL), Nitrile Rubber, Silver Shield, Viton.

Respiratory Protection: No respiratory protection is normally required.

If user operations generate an oil mist, determine if airborne concentrations are below the occupational exposure limit for mineral oil mist. If not, wear an approved respirator that provides adequate protection from the measured concentrations of this material. For air-purifying respirators use a particulate cartridge.

Use a positive pressure air-supplying respirator in circumstances where air-purifying respirators may not provide adequate protection.

SECTION 9 PHYSICAL AND CHEMICAL PROPERTIES

Attention: the data below are typical values and do not constitute a specification.

Color: Yellow
Physical State: Liquid
Odor: Petroleum odor
pH: Not Applicable
Vapor Pressure: <0.01 mmHg @ 37.8 °C (100 °F)
Vapor Density (Air = 1): >1
Boiling Point: >315°C (599°F)
Solubility: Soluble in hydrocarbon solvents; insoluble in water.
Freezing Point: Not Applicable
Specific Gravity: 0.86 - 0.9 @ 15.6°C (60.1°F) / 15.6°C (60.1°F)
Density: 0.86 kg/l - 0.9 kg/l @ 15°C (59°F)
Volatile Organic Compounds (VOC) : <2.1 %weight
Viscosity: 28.8 cSt @ 40°C (104°F) (Min)

SECTION 10 STABILITY AND REACTIVITY

Chemical Stability: This material is considered stable under normal ambient and anticipated storage and handling conditions of temperature and pressure.

Incompatibility With Other Materials: May react with strong acids or strong oxidizing agents, such as chlorates, nitrates, peroxides, etc.
Hazardous Decomposition Products: None known (None expected)
Hazardous Polymerization: Hazardous polymerization will not occur.

SECTION 11 TOXICOLOGICAL INFORMATION

IMMEDIATE HEALTH EFFECTS

Eye Irritation: The eye irritation hazard is based on evaluation of data for similar materials or product components.
Skin Irritation: The skin irritation hazard is based on evaluation of data for similar materials or product components.
Skin Sensitization: No product toxicology data available.
Acute Dermal Toxicity: The acute dermal toxicity hazard is based on evaluation of data for similar materials or product components.
Acute Oral Toxicity: The acute oral toxicity hazard is based on evaluation of data for similar materials or product components.
Acute Inhalation Toxicity: The acute inhalation toxicity hazard is based on evaluation of data for similar materials or product components.

ADDITIONAL TOXICOLOGY INFORMATION:

This product contains petroleum base oils which may be refined by various processes including severe solvent extraction, severe hydrocracking, or severe hydrotreating. None of the oils requires a cancer warning under the OSHA Hazard Communication Standard (29 CFR 1910.1200). These oils have not been listed in the National Toxicology Program (NTP) Annual Report nor have they been classified by the International Agency for Research on Cancer (IARC) as; carcinogenic to humans (Group 1), probably carcinogenic to humans (Group 2A), or possibly carcinogenic to humans (Group 2B). These oils have not been classified by the American Conference of Governmental Industrial Hygienists (ACGIH) as: confirmed human carcinogen (A1), suspected human carcinogen (A2), or confirmed animal carcinogen with unknown relevance to humans (A3).

SECTION 12 ECOLOGICAL INFORMATION

ECOTOXICITY

48 hour(s) EC50: >1000 mg/l (Daphnia magna)
96 hour(s) LC50: >1000 mg/l (Oncorhynchus mykiss)
This material is not expected to be harmful to aquatic organisms.

ENVIRONMENTAL FATE

This material is not expected to be readily biodegradable.

SECTION 13 DISPOSAL CONSIDERATIONS

Use material for its intended purpose or recycle if possible. Oil collection services are available for used oil recycling or disposal. Place contaminated materials in containers and dispose of in a manner consistent with applicable regulations. Contact your sales representative or local environmental or health authorities for approved disposal or recycling methods.

SECTION 14 TRANSPORT INFORMATION

The description shown may not apply to all shipping situations. Consult 49CFR, or appropriate Dangerous Goods Regulations, for additional description requirements (e.g., technical name) and mode-specific or quantity-specific shipping requirements.
DOT Shipping Description: PETROLEUM LUBRICATING OIL, NOT REGULATED AS A HAZARDOUS MATERIAL FOR TRANSPORTATION UNDER 49 CFR
Additional Information:NOT HAZARDOUS BY U.S. DOT. ADR/RID HAZARD CLASS NOT APPLICABLE.

IMO/IMDG Shipping Description: PETROLEUM LUBRICATING OIL; NOT REGULATED AS DANGEROUS

GOODS FOR TRANSPORT UNDER THE IMDG CODE

ICAO/IATA Shipping Description: PETROLEUM LUBRICATING OIL; NOT REGULATED AS DANGEROUS GOODS FOR TRANSPORT UNDER ICAO

SECTION 15 REGULATORY INFORMATION

EPCRA 311/312 CATEGORIES: 1. Immediate (Acute) Health Effects: NO
2. Delayed (Chronic) Health Effects: NO
3. Fire Hazard: NO
4. Sudden Release of Pressure Hazard: NO
5. Reactivity Hazard: NO

REGULATORY LISTS SEARCHED:

01-1=IARC Group 1	03=EPCRA 313
01-2A=IARC Group 2A	04=CA Proposition 65
01-2B=IARC Group 2B	05=MA RTK
02=NTP Carcinogen	06=NJ RTK
	07=PA RTK

No components of this material were found on the regulatory lists above.

CHEMICAL INVENTORIES:
All components comply with the following chemical inventory requirements: AICS (Australia), DSL (Canada), ENCS (Japan), IECSC (China), KECI (Korea), PICCS (Philippines), TSCA (United States).

One or more components is listed on ELINCS (European Union). Secondary notification by the importer may be required. All other components are listed or exempted from listing on EINECS.

NEW JERSEY RTK CLASSIFICATION:
Under the New Jersey Right-to-Know Act L. 1983 Chapter 315 N.J.S.A. 34:5A-1 et. seq., the product is to be identified as follows: PETROLEUM OIL (Hydraulic oil)

WHMIS CLASSIFICATION:
This product is not considered a controlled product according to the criteria of the Canadian Controlled Products Regulations.

SECTION 16 OTHER INFORMATION

NFPA RATINGS: Health: 0 Flammability: 1 Reactivity: 0

HMIS RATINGS: Health: 1 Flammability: 1 Reactivity: 0
(0-Least, 1-Slight, 2-Moderate, 3-High, 4-Extreme, PPE:- Personal Protection Equipment Index recommendation, *- Chronic Effect Indicator). These values are obtained using the guidelines or published evaluations prepared by the National Fire Protection Association (NFPA) or the National Paint and Coating Association (for HMIS ratings).

LABEL RECOMMENDATION:
Label Category : INDUSTRIAL OIL 1 - IND1

REVISION STATEMENT: This revision updates the following sections of this Material Safety Data Sheet: 2,15.
Revision Date: January 11, 2007

ABBREVIATIONS THAT MAY HAVE BEEN USED IN THIS DOCUMENT:

TLV - Threshold Limit Value	TWA - Time Weighted Average
STEL - Short-term Exposure Limit	PEL - Permissible Exposure Limit

	CAS - Chemical Abstract Service Number
ACGIH - American Conference of Government Industrial Hygienists	IMO/IMDG - International Maritime Dangerous Goods Code
API - American Petroleum Institute	MSDS - Material Safety Data Sheet
CVX - Chevron	NFPA - National Fire Protection Association (USA)
DOT - Department of Transportation (USA)	NTP - National Toxicology Program (USA)
IARC - International Agency for Research on Cancer	OSHA - Occupational Safety and Health Administration

Prepared according to the OSHA Hazard Communication Standard (29 CFR 1910.1200) and the ANSI MSDS Standard (Z400.1) by the Chevron Energy Technology Company, 100 Chevron Way, Richmond, California 94802.

The above information is based on the data of which we are aware and is believed to be correct as of the date hereof. Since this information may be applied under conditions beyond our control and with which we may be unfamiliar and since data made available subsequent to the date hereof may suggest modifications of the information, we do not assume any responsibility for the results of its use. This information is furnished upon condition that the person receiving it shall make his own determination of the suitability of the material for his particular purpose.

ATTACHMENT C

MATERIAL SAFETY DATA SHEETS (MSDS)

LAD-7503

EMERGENCY NUMBER 800.424.9300 - CHEMTREC

HEALTH HAZARD DATA

INHALATION: PROLONGED BREATHING OF VAPORS OR MISTS MAY CAUSE RESPIRATORY TRACT IRRITATION.

INGESTION: MAY CAUSE IRRITATION OF THE GASTROINTESTINAL TRACT, NAUSEA, VOMITING, AND DIARRHEA.

SKIN: PROLONGED OR REPEATED CONTACT CAN CAUSE MODERATE IRRITATION, DEFATTING, OR DERMATITIS.

EYES: CAN CAUSE TRANSIENT EYE IRRITATION WITH PAIN AND REDNESS.

CHRONIC: NONE KNOWN.

HANDLING & STORAGE

WEAR APPROPRIATE SAFETY EQUIPMENT, AS LISTED ON THE MSDS, BEFORE HANDLING THIS PRODUCT. KEEP CONTAINERS AWAY FROM EXTREME TEMPERATURES. KEEP EMPTY CONTAINERS AWAY FROM SPARKS AND OPEN FLAMES. ROTATE STOCK. DO NOT RE-USE EMPTY CONTAINERS, MAY BE HAZARDOUS WHEN EMPTY.

CONTAIN SPILLS WITH ABSORBANT AND PLACE IN PROPER WASTE CONTAINERS. DISPOSE OF IN APPROVED MANNER, INACCORDANCE WITH ALL LOCAL, STATE AND REDERAL REGULATIONS.

LOT # 1104

Gallons 55

FIRST AID

INHALATION: IF IRRITATION OCCURS, REMOVE TO FRESH AIR, GET MEDICAL ATTENTION IF IRRITATION PERSISTS.

INGESTION: DO NOT INDUCE VOMITING. DILUTE WITH WATER OR MILK. KEEP PERSON WARM AND QUIET AND GET MEDICAL ATTENTION.

SKIN: REMOVE ANY CONTAMINATED CLOTHING. THOROUGHLY WASH AREA WITH MILD SOAP AND WATER. GET MEDICAL ATTENTION

IF IRRITATION OCCURS. LAUNDER CONTAMINATED CLOTHING.

EYES: FLUSH WITH WATER, IMMEDIATELY, FOR AT LEAST 15 MINUTES LIFTING UPPER AND LOWER LIDS OCCASIONALLY.

PRECAUTIONS

OSHA Potential Hazardous Ingredients

INGREDIENT	C.A.S. #	%	TLV,PEL, OTHER HAZARDS
HYDROTREATED NAPHTHENIC DISTILLATES	64742-52-5	5-15	PEL/TLV 5 mg/m3, MIST

Health	1
Flammability	0
Reactivity	0
Personal Protection	C

READ MSDS FOR MORE DETAILED INFORMATION BEFORE USING

LAD Solutions, Inc.

PO Box 316, 950 Industrial Parkway Plainwell, MI 49080 269 685.6839 - 800.783.6839 - Fax: 269-685-1287

Material Safety Data Sheet

SECTION 1 - PRODUCT IDENTITY

Product Name ..... ***LAD 7503***

Chemical Family ..... MIXTURE

Formula ..... MIXTURE

Transportation Emergency..... CHEMTREC: (800) 424-9300

NFPA CODES..... HEALTH - 1 FLAMMABILITY - 0 REACTIVITY - 0

SECTION 2 - HAZARDOUS INGREDIENTS

Hazardous Ingredients As Defined by OSHA 29 CFR 1910.1200:

CHEMICAL NAME	C.A.S. REGISTRY NO.	%	TLV, PEL, OTHER LIMITS
HYDROTREATED NAPHTHENIC DISTILLATES	64742-52-5	10-20	PEL/TLV = 5 mg/m3, As Oil Mist

SECTION 3 - PHYSICAL DATA

Physical State..... Liquid

Odor and Appearance ..... Mild Odor, Dark Blue or Undyed Concentrate

Specific Gravity ..... 1 - 1.10

Vapor Pressure ..... Not Determined

Vapor Density..... Not Determined

Evaporation Rate..... Equivalent to Water

Boiling Point..... 212~ F (100 C)

Freezing Point..... 32 F, (0 C)

pH ..... 9.0 - 9.6 @ 5%

Water Solubilty..... Completely Soluble

SECTION 4 - FIRE AND EXPLOSION HAZARD

Flash Point ..... NONE, WATER BASED

Flammable Limits ..... NONE, WATER BASED

Extinguishing Media ..... REGULAR FOAM, WATER SPRAY, CARBON DIOXIDE, HALON, OR DRY CHEMICAL FOR SURROUNDING FIRES.

Special Fire Fighting Procedures ..... WEAR SELF-CONTAINED BREATHING APPARATUS WITH A FULL FACEPIECE OPERATED IN THE POSITIVE PRESSURE DEMAND MODE WHEN FIGHTING FIRES.

Unusual Fire and Explosion Hazards ..... TIGHTLY CLOSED CONTAINERS MAY BURST UNDER FIRE CONDITIONS. COOL WITH WATER STREAM.

SECTION 5 - REACTIVITY DATA

Stability ..... STABLE

Incompatible Materials ..... STRONG OXIDIZERS

Conditions to Avoid ..... AVOID HEAT, SPARKS, AND OPEN FLAMES

Hazardous Polymerization ..... WILL NOT OCCUR

Hazardous Decomposition Products ..... IN THE EVENT OF COMPLETE EVAPORATION OF WATER, RESIDUE MAY YIELD DECOMPOSITION PRODUCTS: OXIDES OF CARBON AND OTHER ORGANICS

SECTION 6 - CONTROL MEASURES

Respiratory Protection ..... LOCAL EXHAUST AND MECHANICAL VENTILATION RECOMMENDED

Local Exhaust Ventilation ..... SUFFICIENT MECHANICAL (GENERAL AND/OR LOCAL) VENTILATION

Mechanical Ventilation ..... USE FANS WITHIN WORK AREA TO FACILITATE VENTILATION

Protective Gloves ..... CHEMICALLY RESISTANT GLOVES SUCH AS POLYETHYLENE RECOMMENDED

Eye Protection ..... CHEMICAL SPLASH GOGGLES OR SAFETY GLASSES RECOMMENDED. AVOID EYE CONTACT

Other Protective Equipment ..... WEAR IMPERVIOUS CLOTHING AND BOOTS TO PREVENT PROLONGED OR REPEATED SKIN CONTACT. APRON RECOMMENDED. EYE-WASH AVAILABLE IN CASE OF ACCIDENT IS RECOMMENDED.

LAD Solutions, Inc.

PO Box 316, 950 Industrial Parkway Plainwell, MI 49080 269 685.6839 - 800.783.6839 - Fax: 269 685.1287

Material Safety Data Sheet

SECTION 7 - HEALTH HAZARD DATA

TLV for Mixture ..... NOT ESTABLISHED

Primary Route of Entry ..... EYE/SKIN CONTACT

EFFECTS OF OVEREXPOSURE

Inhalation: PROLONGED BREATHING OF VAPORS MAY CAUSE RESPIRATORY TRACT IRRITATION.

Oral: INGESTING LARGE AMOUNTS MAY CAUSE IRRITATION OF THE GASTROINTESTINAL TRACT, NAUSEA AND VOMITING.

Skin: PROLONGED CONTACT WITH CONCENTRATE CAN RESULT IN SKIN IRRITATION.

Eyes: MAY CAUSE TRANSIENT EYE IRRITATION WITH PAIN AND REDNESS.

Chronic Overexposure: NONE KNOWN.

FIRST AID PROCEDURES

Inhalation: IF IRRITATION OCCURS, REMOVE TO FRESH AIR. GET MEDICAL ATTENTION IF IRRITATION PERSISTS.

Ingestion: DO NOT INDUCE VOMITING. DILUTE WITH WATER OR MILK. KEEP PERSON WARM AND QUIET AND GET MEDICAL ATTENTION.

Skin: REMOVE ANY CONTAMINATED CLOTHING. THOROUGHLY WASH AREA WITH MILD SOAP AND WATER. GET MEDICAL ATTENTION IF IRRITATION OCCURS. LAUNDER CONTAMINATED CLOTHING BEFORE RE-USE.

Eyes: FLUSH WITH WATER, IMMEDIATELY, FOR AT LEAST 15 MINUTES, LIFTING UPPER AND LOWER LIDS OCCASIONALLY. GET IMMEDIATE MEDICAL ATTENTION.

TOXICOLOGICAL DATA

FROM THE AVAILABLE TOXILOGICAL DATA ON THE INGREDIENTS USED IN THIS PRODUCT, THE PROJECTED TOXILOGICAL DATA FOR THIS FINISHED PRODUCT IS:

ORAL LD50 (RAT) - >5000 mg/kg, PRACTICALLY NON-TOXIC; DERMAL LD50 (RABBIT) - >5000 mg/kg, PRACTICALLY NON-TOXIC

Carcinogenicity: LISTED IN NTP? NO; IARC MONOGRAPHS? NO; OSHA 1910(z)? NO

SECTION 8 - PRECAUTIONS FOR SAFE HANDLING AND USE

Steps to Take In Case Of Spill ..... LARGE SPILLS SHOULD BE PREVENTED FROM ENTERING DRAINS, SEWERS, STREAMS AND ANY OPEN OR PUBLIC BODY OF WATER. COVER SPILLS WITH AN ABSORBENT, SWEEP UP AND PUT IN A PROPER CONTAINER FOR DISPOSAL IN COMPLIANCE WITH ALL LOCAL, STATE, AND FEDERAL REGULATIONS.

Waste Disposal Method ..... SPILLED MATERIAL SHOULD BE DISCARDED AS DESCRIBED ABOVE, OBSERVING ALL LOCAL, STATE, AND FEDERAL GOVERNMENTAL REGULATIONS THAT APPLY TO SPILL REPORTING AND WASTE DISPOSAL.

Handling And Storage Precautions..... KEEP FROM EXTREME TEMPERATURES. KEEP EMPTY CONTAINERS AWAY FROM SPARKS AND OPEN FLAMES. FOLLOW COMMON SENSE HYGIENE AND HANDLING PRACTICES. KEEP IN A CLOSED CONTAINER WHEN NOT IN USE. WASH THOROUGHLY AFTER USE.

Other Precautions ..... ROTATE STOCK. DON NOT RE-USE EMPTY CONTAINERS.

SECTION 9 - OTHER REGULATORY/SHIPPING INFORMATION

U.S. TSCA ..... ALL COMPONENTS ARE ON THE TSCA INVENTORY.

SARA Title III, Section 313 ..... NONE

Proper Shipping Name ..... METALWORKING FLUID, WATER BASED

DOT Hazard Class (49CFR172.101) ..... NON-HAZARDOUS

Date Prepared..... 01-01-08

MSDS - Material Safety Data Sheet

Product Name: RITEKUTA #7504

MSDS No.: 2230a

I. Basic Information:

Manufacturer

LAD CLEANING SOLUTIONS, INC.
P.O. Box 316, 950 Industrial Parkway
Plainwell, Michigan 49080
269-685-6839 • 1-800-783-6839 • Fax 269-685-1287
Custom Blended Cleaners • Metal Working Fluids • Janitorial Supplies

NFPA: Fire 1, Health 1, Reactivity 0, Special

Health
Flammability
Reactivity
Pers. Protection

Last Update: 08/22/2007 **Expiration Date:**

Chemical State: [X] Liquid [ ] Gas [ ] Solid

Chemical Type: [ ] Pure [X] Mixture

II. Ingredients:

[X] Trade Secret

CAS No.	Chemical Name	% Range	EHS	NTP	IARC	SUB Z	SARA 313	OSHA PEL	ACGIH TLV	Other Limits
	Mineral oil mist								5mg/m3	none

III. Hazardous Identification:

Hazard Category:

[ ] Acute [X] Chronic [ ] Fire [ ] Pressure [ ] Reactive

Hazardous Identification Information:

IV. First Aid Measures:

Route(s) of Entry:

Skin

Health Hazards (Acute and Chronic):

Eyes: Not expected to cause irritation.
Skin: May cause irritation after prolonged & repeated contact.
Ingestion & Inhalation: Not expected to be acutely toxic by ingestion or by inhalation, based on component information.

Signs and Symptoms:

In over exposure, some individuals, after repeated contact, may result in defatting, oil ache, redness,itching, inflammation & mucuus membrane irritation. Inhalation: exposure to high concentrations may cause upper respiratory tract irritation.

Medical Conditions Generally Aggravated by Exposure:

Individuals with pre-existing skin disorders should avoid contact with this product.

Emergency and First Aid Procedures:

MSDS - Material Safety Data Sheet

Product Name: RITEKUT A

MSDS No.: 7230a

Eyes: Immediately flush with large amounts of water for at least 15 minutes, lifting upper & lower lids occasionally. Call physician.
Skin: Remove contaminated clothing. Wipe excess off with a dry, clean cloth.Thoroughly wash exposed area with soap & water (do not use solvents,kerosene, or harsh abrasive skin cleaners). Launder clothing before re-use. Personnel with pre-existing skin disorders should avoid direct contact with this product. Call physician if irritation or pain persist.
Ingestion: Do not induce vomiting unless directed by physician. Vomiting may cause aspiration into the lungs, resulting in chemical pneumonia. Immediately drink two glasses of water or milk do not give anything by mouth to an unconscious person. Call physician immediately for further treatment & observation. Not to be taken internally.
Inhalation: Remove to source of fresh air. Restore and/or support breathing as required. Call physician if needed.

Other Health Warnings:

NONE

V. Fire Fighting Measures:

Flash Point: 350F Min **Lower Explosive Limit:** N/A **Upper Explosive Limit:** N/A

F.P. Method: C.O.C.

Fire Extinguishing Media: Carbon dioxide, dry chemicals, sand, earth. Do not use forced water stream directly on oil fire as this will only scatter the fire.

Special Fire Fighting Procedures:

Pressure demand self-contained breathing apperatus should be provided for fire fighters and operators.

Unusual Fire and Explosion:

none.

VI. Accidental Release Measures:

Steps to be Taken in Case Material is Released or Spilled:

Dike and contain. Remove with vacuum truck or pump. Soak up residue with asorbent such as clay, sand, or vermiculite. Dispose of properly. Wear protective clothing.

VII. Handling and Storage:

Precautions to be Taken:

Keep away from open flames, heat or other source of ignition. Wash with soap & water before eating, drinking, smoking or using toilet facilities. Launder contaminated clothing before reusing. Discard oil soaked shoes & gloves. Store in cool place with adequate ventilation. Avoid contamination with water. Do not put oily rags into pockets. Avoid skin & eye contact, and inhalation of vapor/mist. Avoid prolonged or repeated contact with skin. Do not take internally.

Other Precautions:

NONE

VIII. Exposure Controls/Personal Protection:

Ventilation Requirements:

Local exhaust sufficient to maintain exposure below level of overexposure. Use adequate ventilation to avoid noticeable presence of fumes.
Use a NIOSH approved respirator if mist concentrations are high or if exceeds TLV of 5mg/m3 for mineral oil mist.

Personal Protective Equipment:

Apron & boots to minimize skin contact. Eye wash fountain and washing facilities to be readily available near handling and use areas.

LAD
CLEANING SOLUTIONS, INC.
P.O. Box 316 950 Industrial Parkway
Plainwell, MI 49080

MSDS - Material Safety Data Sheet

Product Name: RITEKUTA

MSDS No.: 2230a

IX. Physical and Chemical Properties:

Boiling Point: >600F

Melting Point: n/a

Evaporation Rate (Butyl Acetate = 1): n/d

Vapor Pressure (mm Hg.): n/d

Specific Gravity (H2O = 1): 0.99400

Vapor Density (AIR = 1): n/d

Solubility in Water: Negligible

Appearance and Odor: Brown fluid, mild odor

Other Information: NONE

X. Stability and Reactivity:

Stability:

stable

Incompatibility (Materials to Avoid):

Avoid heat, open flames or other source of ignition. Avoid Oxidizing materials

Decomposition/By Products:

Complex mixture of airborne solid, liquid particulates & gases will evolve when this product undergoes pyrolisis/combustion. Oxides of carbon, sulfur, and chlorine may be formed.

Hazardous Polymerization:

will not occur

XI. Toxicological Information:

Carcinogenicity:
Not a carcinogen

NTP?
Not listed

IARC Mongraphs?
Not listed

OSHA Regulated?
Not listed

XII. Ecological Information:

no data

XIII. Disposal Considerations:

It is the responsibility of the user to determine if the material is a hazardous waste at the time of disposal. Check before disposing to be sure you are in compliance with all applicable Federal, State, & Local environmental laws and regulations.

XIV. Transport Information:

no data

XV. Regulatory Information:

SARA Title III
Section 302: Extremely Hazardous: None
Section 311: Hazardous Chemical: None
Section 313: Toxic Chemical: None

XVI. Other Information:

LAD
CLEANING SOLUTIONS, INC.
P.O. Box 316 950 Industrial Parkway
Plainwell, MI 49080
269-685-6839 • 1-800-783-6839 • Fax 269-685-1287

MSDS - Material Safety Data Sheet

Product Name: RITEKUT A

MSDS No.: 2250a

METALWORKING LUBRICANTS COMPANY products are manufactured with severely hydrotreated distillates at high pressures, therefore, will not be listed under IARC or NTP.

This MSDS is not intended to preempt, replace, or expand the terms contained in METALWORKING LUBRICANTS COMPANY's conditions of sale. Compliance with all Federal, State, and Local laws and regulations remains the responsibility of the user, and the user has the responsibility to provide a safe workplace, to examine all aspects of its operation, and to determine if or where precautions, in addition to those described herein, are required.

For optimum product performance, product should be used within 1 year of receipt at your plant. This MSDS provides health and safety information. This product is to be used in applications consistent with our product literature. Individuals handling this product should be informed of the recommended safety precautions and should have access to this information. For all and any user, exposures should be evaluated so that appropriate handling practices and training programs can be established to ensure safe workplace and operations.

All information, recommendations, and suggestions appearing herein concerning our product are based on tests and data believed to be reliable. However, it is the user's responsibility to determine safety, toxicity, and suitability for use of the product described herein. Since the actual use by others is beyond our control, no guarantee, expressed or implied, is made by METALWORKING LUBRICANTS COMPANY as to the effect of such use, the results to be obtained, or the safety and/or toxicity of the product. METALWORKING LUBRICANTS COMPANY does not assume any liability arising out of use by others of the product referred to herein. The information herein is not to be construed as absolutely complete, since additional information may be necessary or desirable when particular or exceptional conditions or circumstances exist or because of applicable laws or government regulations.

LAD
CLEANING SOLUTIONS, INC.
P.O. Box 316 950 Industrial Parkway
Plainwell, MI 49080
269-685-6839 • 1-800-783-6839 • Fax 269-685-1287

Monday, November 01, 2004

MSDS - Material Safety Data Sheet

Product Name: RITELUBE WAY 68 #7568

*MSDS No.: 29 ***

I. Basic Information:

LAD CLEANING SOLUTIONS, INC.
P.O. Box 316 950 Industrial Parkway
Plainwell, MI 49080
269-685-6839 • 1-800-783-6839 • Fax 269-685-1287

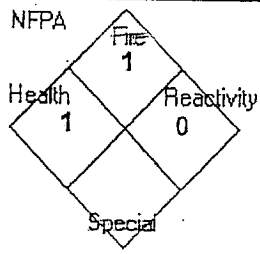

Health
Flammability
Reactivity
Pers. Protection

Last Update: 10/20/2003

Chemical State: [X] Liquid [ ] Gas [ ] Solid

Chemical Type: [ ] Pure [X] Mixture

II. Ingredients:

[ ] Trade Secret *(N/D = Not Disclosed)*

CAS No.	Chemical Name	% Range	EHS	NTP	IARC	SUB Z	SARA 313	OSHA PEL	ACGIH TLV	Other Limits
64742467	Mineral oil mist								5mg/m3	none

III. Hazardous Identification:

Hazard Category:

[ ] Acute [ ] Chronic [ ] Fire [ ] Pressure [ ] Reactive

Hazardous Identification Information:

Eyes: Immediately flush with large amounts of water for at least 15 minutes, lifting upper & lower lids occasionally. Call physician.
Skin: Remove contaminated clothing. Wipe excess off with a dry, clean cloth. Thoroughly wash exposed area with soap & water (do not use solvents, kerosene, or harsh abrasive skin cleaners). Launder clothing before re-use. Personnel with pre-existing skin disorders should avoid direct contact with this product. Call physician if irritation or pain persist.
Ingestion: Do not induce vomiting unless directed by physician. Vomiting may cause aspiration into the lungs, resulting in chemical pneumonia. Immediately drink two glasses of water or milk do not give anything by mouth to an unconscious person. Call physician immediately for further treatment & observation. Not to be taken internally.
Inhalation: Remove to source of fresh air. Restore and/or support breathing as required. Call physician if needed.

IV. First Aid Measures:

Route(s) of Entry:

Most likely: skin & eyes.

Health Hazards (Acute and Chronic):

Eyes: No more than minimal irritation.
Skin: May cause irritation after prolonged & repeated contact to sensitive individuals.
Ingestion & Inhalation: Not expected to be acutely toxic by ingestion or by inhalation, based on component information. Practically non-toxic based on component information.

Signs and Symptoms:

In some individuals, after repeated contact, may result in defatting, oil acne, redness,itching, & inflammation. Inhalation: exposure to high concentrations at high temperatures may cause upper respiratory tract irritation.

MSDS - Material Safety Data Sheet

Product Name: RITELUBE WAY 68

MSDS No.: 29 **

I. Basic Information:

Manufacturer: Metalworking Lubricants Company

Address: 25 W Silverdome Industrial Park

City, ST Zip: Pontiac, MI 48342

Emergency Contact:

Emergency Telephone Number: 248-332-3500

Contact:

Information Telephone Number: 248-332-3500

Last Update: 10/20/2003

Chemical State: [X] Liquid [ ] Gas [ ] Solid

Chemical Type: [ ] Pure [X] Mixture

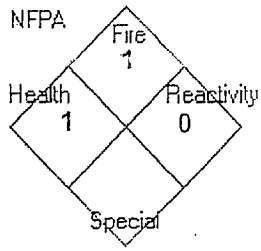

Health
Flammability
Reactivity
Pers. Protection

II. Ingredients:

[ ] Trade Secret *(N/D = Not Disclosed)*

CAS No.	Chemical Name	% Range	EHS NTP	IARC SUB Z	SARA 313	OSHA PEL	ACGIH TLV	Other Limits
64742467	Mineral oil mist						5mg/m3	none

III. Hazardous Identification:

Hazard Category:

[ ] Acute [ ] Chronic [ ] Fire [ ] Pressure [ ] Reactive

Hazardous Identification Information:

Eyes: Immediately flush with large amounts of water for at least 15 minutes, lifting upper & lower lids occasionally. Call physician.
Skin: Remove contaminated clothing. Wipe excess off with a dry, clean cloth. Thoroughly wash exposed area with soap & water (do not use solvents, kerosene, or harsh abrasive skin cleaners). Launder clothing before re-use. Personnel with pre-existing skin disorders should avoid direct contact with this product. Call physician if irritation or pain persist.
Ingestion: Do not induce vomiting unless directed by physician. Vomiting may cause aspiration into the lungs, resulting in chemical pneumonia. Immediately drink two glasses of water or milk do not give anything by mouth to an unconscious person. Call physician immediately for further treatment & observation. Not to be taken internally.
Inhalation: Remove to source of fresh air. Restore and/or support breathing as required. Call physician if needed.

IV. First Aid Measures:

Route(s) of Entry:

Most likely: skin & eyes.

Health Hazards (Acute and Chronic):

Eyes: No more than minimal irritation.
Skin: May cause irritation after prolonged & repeated contact to sensitive individuals.
Ingestion & Inhalation: Not expected to be acutely toxic by ingestion or by inhalation, based on component information. Practically non-toxic based on component information.

Signs and Symptoms:

In some individuals, after repeated contact, may result in defatting, oil acne, redness,itching, & inflammation. Inhalation: exposure to high concentrations at high temperatures may cause upper respiratory tract irritation.

MSDS - Material Safety Data Sheet

Product Name: RITELUBE WAY 68

MSDS No.: 29 **

Medical Conditions Generally Aggravated by Exposure:

Individuals with pre-existing skin disorders should avoid contact with this product.

Emergency and First Aid Procedures:

Eyes: Immediately flush with large amounts of water for at least 15 minutes, lifting upper & lower lids occasionally. Call physician if needed.
Skin: Remove contaminated clothing. Wipe excess off with a dry, clean cloth. Throughly wash exposed area with soap & water (do not use solvents, kerosene, or harsh abrasive skin cleaners). Launder clothing before re-use. Personnel with pre-existing skin disorders should avoid direct contact with this product. Call physician if irritation or pain persist.
Ingestion: Do not induce vomiting unless directed by physician. Vomiting may cause aspiration into the lungs, resulting in chemical pneumonia. Immediately dring two glasses of water or milk do not give anything by mouth to an unconscious person. Call physician immediately for further treatment & observation. Not to be taken internally.
Inhalation: Remove to source of fresh air. Restore and/or support breathing as required. Call physician if needed.

Other Health Warnings:

V. Fire Fighting Measures:

Flash Point: 330F COC **Lower Explosive Limit:** n/a **Upper Explosive Limit:** n/a

F.P. Method:

Fire Extinguishing Media: Carbon dioxide, dry chemicals, sand & earth.

Special Fire Fighting Procedures:

Pressure demand self-contained breathing apparatus should be provided for fire fighters.

Unusual Fire and Explosion:

none

VI. Accidental Release Measures:

Steps to be Taken in Case Material is Released or Spilled:

Notify safety personnel of leaks and/or spills. Remove any sources of heat. Wear protection againist liquid contact & vapor/mist inhalation. Dike and contain. Prevent it from entering all water bodies. Absorb residue with absorbent such as clay, sand or vermiculite. Dispose of properly.

VII. Handling and Storage:

Precautions to be Taken:

Keep away from open flames, heat or other source of ignition. Keep containers closed when not in use. Do not re-use containers before cleaning. After cleaning, remove label & re-label appropriately. Do not combine product with other fluids & avoid contamination with water. Avoid freezing. Store in cool place with adequate ventilation.
Wash with soap & water before eating, drinking, smoking or using toilet facilities. Launder contaminated clothing before reusing. Discard oil soaked shoes & gloves. Do not put oily rags into pockets. Avoid skin & eye contact, and inhalation of vapor/mist. Avoid prolonged or repeated contact with skin. Do not take internally.
For optimum product performance, product should be used within six months of receipt at your plant. This MSDS provides health and safety information. This product is to be used in applications consistent with our product literature. Individuals handling this product should be informed of the recommended safety precautions and should have access to this information. For all and any uses, exposures should be evaluated so that appropriate handling practices and training programs can be established. to ensure safe workplace and operations.

Other Precautions:

MSDS - Material Safety Data Sheet

Product Name: RITELUBE WAY 68

*MSDS No.: 29 ***

Eye wash fountain & safety shower facilities to be readily available. Keep away from foodstuff and or cigarettes. To prevent repeated or prolonged skin contact, wear impervious clothing (apron) and boots to avoid all skin contact. Use impermeable gloves such as Nitrile, wear chemical splash goggles, when attaching feeding equipment, doing maintenance or handling product.

VIII. Exposure Controls/Personal Protection:

Ventilation Requirements:

Local exhaust sufficient to maintain exposure below level of overexposure, Use adequate ventilation to avoid noticeable presence of fumes.
Use a NIOSH approved respirator if mist concentrations are high or noticeable fumes

Personal Protective Equipment:

No special requirements are required.
The following is optional equipment:
To prevent repeated or prolonged skin contact, wear impervious clothing (apron) and boots to avoid all skin contact. Use impermeable gloves such as Nitrile and wear chemical splash goggles, when attaching feeding equipment, doing maintenance or handling product.

IX. Physical and Chemical Properties:

Boiling Point: >500 F

Melting Point: n/a

Evaporation Rate (Butyl Acetate = 1): n/d

Vapor Pressure (mm Hg.): n/d

Specific Gravity (H20 = 1): 0.88800

Vapor Density (AIR = 1): n/d

Solubility In Water: negligible

Appearance and Odor: see below

Other Information: Appearance: clear brown colored liquid with faint hydrocarbon odor.

X. Stability and Reactivity:

Stability:

stable

Incompatibility (Materials to Avoid):

Avoid heat, open flames or other source of ignition. Avoid Oxidizing materials

Decomposition/By Products:

Complex mixture of airborne solid, liquid particulates & gases will evolve when this product undergoes pyrolisis/combustion. Oxides of carbon, sulfur may be formed.

Hazardous Polymerization:

will not occur

XI. Toxicological Information:

Carcinogenicity:
Not a carcinogen

NTP?
Not listed.

IARC Mongraphs?
Not listed

OSHA Regulated?
Not Listed

XII. Ecological Information:

no data

MSDS - Material Safety Data Sheet

Product Name: RITELUBE WAY 68

MSDS No.: 29 **

XIII. Disposal Considerations:

It is the responsibility of the user to determine if the material is a hazardous waste at the time of disposal. Check before disposing to be sure you are in compliance with all applicable Federal, State, & Local environmental laws and regulations.

XIV. Transport Information:

XV. Regulatory Information:

SARA Title III
Section 302: Extremely hazardous substance: no
Section 311: Hazardous chemical: no
Section 313: Toxic chemical: no

XVI. Other Information:

All information, recommendations, and suggestions appearing herein concerning our product are based on tests and data believed to be reliable. However, it is the user's responsibility to determine safety, toxicity, and suitability for his own use of the product described herein. Since the actual use by others is beyond our control, no guarantee, expressed or implied, is made by METALWORKING LUBRICANTS COMPANY as to the effect of such use, the results to be obtained, or the safety and/or toxicity of the product. METALWORKING LUBRICANTS COMPANY does not assume any liability arising our of use by others of the product referred to herein. The information herein is not to be construed as absolutely complete, since additional information may be necessary or desirable when particular or exceptional conditions or circumstances exist or because of applicable laws or government regulations.

This MSDS is not intended to preempt, replace, or expand the terms contained in METALWORKING LUBRICANTS COMPANY's conditions of sale. Compliance with all Federal, State, and Local laws and regulations remains the responsibility of the user, and the user has the reponsibility to provide a safe workplace, to examine all aspects of its operation, and to determine if or where precautions, in addition to those described herein, are required.

Material Safety Data Sheet

1. Chemical product and company identification

Product name	RUSTILO 4130
Historic MSDS #:	09012-AE,MX
Code	461310-US03,MX10
Product use	Rust preventive
Manufacturer	Castrol Industrial North America, Inc. 150 W. Warrenville Road Naperville, IL 60563
Supplier	Castrol Industrial North America, Inc. 150 W. Warrenville Road Naperville, IL 60563 Product Information: 1-800-621-2661
EMERGENCY SPILL INFORMATION:	1 (800) 424-9300 CHEMTREC (USA)

2. Composition/information on ingredients

Ingredient name	CAS #	% by weight
Barium sulfonate	25619-56-1	5 - 10
Distillates (petroleum), hydrotreated, heavy naphthenic (Highly refined mineral oil)	64742-52-5	5 - 10
Base oil - highly refined	64742-52-5 / 64742-53-6 / 64742-54-7	5 - 10

3. Hazards identification

Physical state	Liquid.
Color	Clear. Hazy. Amber.
Emergency overview	WARNING! COMBUSTIBLE LIQUID AND VAPOR. VAPOR MAY CAUSE FIRE. HARMFUL IF INHALED. CAUSES EYE IRRITATION. CAUSES SKIN IRRITATION. MAY CAUSE RESPIRATORY TRACT IRRITATION. Do not ingest. Do not get in eyes, on skin or clothing. In accordance with good industrial hygiene and safety work practices, airborne exposures should be controlled to the lowest extent practicable. Keep container closed. Use only with adequate ventilation. Wash thoroughly after handling.
Routes of entry	Dermal contact. Eye contact. Inhalation. Ingestion.
Potential health effects	
Eyes	Causes eye irritation.
Skin	Causes skin irritation.
Inhalation	Harmful if inhaled. May cause respiratory tract irritation.
Ingestion	Ingestion may cause gastrointestinal irritation and diarrhea.

Medical conditions aggravated by over-exposure	None identified.

See toxicological Information (section 11).

4. First aid measures

Eye contact	In case of contact, immediately flush eyes with plenty of water for at least 15 minutes. Get medical attention if irritation develops.
Skin contact	Immediately wash exposed skin with soap and water. Remove contaminated clothing and shoes. Wash clothing before reuse. Thoroughly clean shoes before reuse. Get medical attention if irritation develops.
Inhalation	If inhaled, remove to fresh air. If not breathing, give artificial respiration. If breathing is difficult, give oxygen. Get medical attention.
Ingestion	Do NOT induce vomiting unless directed to do so by medical personnel. Never give anything by mouth to an unconscious person. Get medical attention if symptoms appear.

5. Fire-fighting measures

Flammability of the product	Combustible.
Flash point	82.222 °C (Open cup) Cleveland.
Products of combustion	These products are carbon oxides (CO, CO_2) (carbon monoxide, carbon dioxide), sulfur oxides (SO_2, SO_3 etc.). Some metallic oxides.
Unusual fire/explosion hazards	Combustible liquid and vapor. Vapor may cause flash fire. Vapors may accumulate in low or confined areas, travel considerable distance to source of ignition and flash back. Runoff to sewer may create fire or explosion hazard. Non-explosive in the presence of the following materials or conditions: open flames, sparks and static discharge, heat, shocks and mechanical impacts and oxidizing materials.
Fire-fighting media and instructions	In case of fire, use water fog, foam, dry chemicals, or carbon dioxide. DO NOT FIGHT FIRE WHEN IT REACHES MATERIAL. Withdraw from fire and let it burn. Promptly isolate the scene by removing all persons from the vicinity of the incident if there is a fire. First move people out of line-of-sight of the scene and away from windows. Cool containing vessels with water jet in order to prevent pressure build-up, autoignition or explosion.
Protective clothing (fire)	Fire-fighters should wear positive pressure self-contained breathing apparatus (SCBA) and full turnout gear.

6. Accidental release measures

Personal precautions	Immediately contact emergency personnel. Eliminate all ignition sources. Keep unnecessary personnel away. Use suitable protective equipment (See Section: "Exposure controls/personal protection"). Follow all fire fighting procedures (See Section: "Fire-fighting measures"). Do not touch or walk through spilled material.
Environmental precautions and clean-up methods	If emergency personnel are unavailable, contain spilled material. For small spills add absorbent (soil may be used in the absence of other suitable materials) and use a non-sparking or explosion proof means to transfer material to a sealed, appropriate container for disposal. For large spills dike spilled material or otherwise contain material to ensure runoff does not reach a waterway. Place spilled material in an appropriate container for disposal. Avoid contact of spilled material with soil and prevent runoff entering surface waterways. See Section 13 for Waste Disposal Information.
Personal protection in case of a large spill	Splash goggles. Full suit. Boots. Gloves. Suggested protective clothing might not be sufficient; consult a specialist BEFORE handling this product.

7. Handling and storage

Handling

Do not ingest. Do not get in eyes, on skin or on clothing. Avoid contact with skin and clothing. In accordance with good industrial hygiene and safety work practices, airborne exposures should be controlled to the lowest extent practicable. Use only with adequate ventilation. Wash thoroughly after handling.

Storage

Store in a segregated and approved area. Keep container in a cool, well-ventilated area. Keep container tightly closed and sealed until ready for use. Avoid all possible sources of ignition (spark or flame).

8. Exposure controls/personal protection

Occupational exposure limits

Ingredient name	Occupational exposure limits
Barium sulfonate	None assigned.
Distillates (petroleum), hydrotreated, heavy naphthenic (Highly refined mineral oil)	**ACGIH (United States).** STEL: 10 mg/m^3 15 minute(s). Form: Oil mist, mineral TWA: 5 mg/m^3 8 hour(s). Form: Oil mist, mineral **OSHA (United States).** TWA: 5 mg/m^3 8 hour(s). Form: Oil mist, mineral
Base oil - highly refined	**ACGIH (United States).** STEL: 10 mg/m^3 15 minute(s). Form: Oil mist, mineral TWA: 5 mg/m^3 8 hour(s). Form: Oil mist, mineral **OSHA (United States).** TWA: 5 mg/m^3 8 hour(s). Form: Oil mist, mineral

Control Measures

Provide exhaust ventilation or other engineering controls to keep the relevant airborne concentrations below their respective occupational exposure limits.

Hygiene measures

Wash hands, forearms and face thoroughly after handling chemical products, before eating, smoking and using the lavatory and at the end of the working period.

Personal protection

Eyes

Avoid contact with eyes. Safety glasses with side shields.

Skin and body

Avoid contact with skin and clothing. Wear suitable protective clothing.

Respiratory

Use only with adequate ventilation. In accordance with good industrial hygiene and safety work practices, airborne exposures should be controlled to the lowest extent practicable.

Hands

Wear suitable gloves.

Not available.

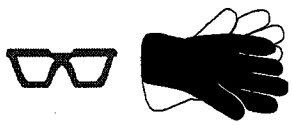

Consult local authorities for acceptable exposure limits.

9. Physical and chemical properties

Physical state	Liquid.
Color	Clear. Hazy. Amber.
Heat of combustion	Not available.
Specific gravity	0.82
Solubility	Insoluble in cold water.

10. Stability and reactivity

Stability and reactivity	The product is stable.
Conditions to avoid	Not available.
Incompatibility with various substances	Reactive or incompatible with the following materials: oxidizing materials.
Hazardous decomposition products	Not available.
Hazardous polymerization	Not available.

11. Toxicological information

Chronic toxicity

Carcinogenic effects	No component of this product at levels greater than 0.1% is identified as a carcinogen by ACGIH or the International Agency for Research on Cancer (IARC). No component of this product present at levels greater than 0.1% is identified as a carcinogen by the U.S. National Toxicology Program (NTP) or the U.S. Occupational Safety and Health Act (OSHA).
Mutagenic effects	No component of this product at levels greater than 0.1% is classified by established regulatory criteria as a mutagen.
Reproductive effects	No component of this product at levels greater than 0.1% is classified by established regulatory criteria as a reproductive toxin.
Teratogenic effects	No component of this product at levels greater than 0.1% is classified by established regulatory criteria as teratogenic or embryotoxic.
Other chronic toxicity data	Can cause central nervous system (CNS) depression.

12. Ecological information

Ecotoxicity	No testing has been performed by the manufacturer.

13. Disposal considerations

Waste information	Avoid contact of spilled material and runoff with soil and surface waterways. Consult an environmental professional to determine if local, regional or national regulations would classify spilled or contaminated materials as hazardous waste. Use only approved transporters, recyclers, treatment, storage or disposal facilities. Dispose of in accordance with all applicable local and national regulations.

Consult your local or regional authorities.

14. Transport information

International transport regulations

Regulatory information	UN number	Proper shipping name	Class	Packing group	Label	Additional information
DOT Classification	NA1993	Combustible liquid, n.o.s. (Hydrocarbon solvent)	Combustible liquid.	III	---	**Remarks** Not regulated in containers less than 110 gallons.

TDG Classification	Not regulated.	Not regulated.	Not regulated.	Not regulated.		Not regulated.
IMDG Classification	Not regulated.	Not regulated.	Not regulated.	Not regulated.	—	Not regulated.
IATA Classification	Not regulated.	Not regulated.	Not regulated.	Not regulated.	—	Not regulated.

15. Regulatory information

U.S. Federal regulations

US INVENTORY (TSCA): In compliance.

This product is not regulated under Section 302 of SARA and 40 CFR Part 355.

SARA 311/312 MSDS distribution - chemical inventory - hazard identification: RUSTILO 4130: Fire hazard, Immediate (Acute) Health Hazard

SARA 313

	Product name	CAS number	Concentration
Form R - Reporting requirements	Barium sulfonate	25619-56-1	4.5 - 5.499
Supplier notification	Barium sulfonate	25619-56-1	4.5 - 5.499

CERCLA Sections 102a/103 Hazardous Substances (40 CFR Part 302.4):: Methanol: 5000 lbs. (2268 kg); Ethylene oxide: 10 lbs. (4.536 kg); 1,4-dioxane: 100 lbs. (45.36 kg);

State regulations

Massachusetts RTK:2-Methylpentane-2,4-diol
New Jersey:Barium sulfonate; polyethylene glycol Octaphenyl ether ; 2-Methylpentane-2,4-diol
Pennsylvania RTK:Barium sulfonate (environmental hazard, generic environmental hazard); 2-Methylpentane-2,4-diol (generic environmental hazard)

California prop. 65: No products were found.

Inventories

AUSTRALIAN INVENTORY (AICS): In compliance.

CANADA INVENTORY (DSL): In compliance.

CHINA INVENTORY (IECS): Not determined.

EC INVENTORY (EINECS/ELINCS): Not determined.

JAPAN INVENTORY (ENCS): In compliance.

KOREA INVENTORY (ECL): In compliance.

PHILIPPINE INVENTORY (PICCS): In compliance.

16. Other information

Label requirements

WARNING!

COMBUSTIBLE LIQUID AND VAPOR.
VAPOR MAY CAUSE FIRE.
HARMFUL IF INHALED.
CAUSES EYE IRRITATION.
CAUSES SKIN IRRITATION.
MAY CAUSE RESPIRATORY TRACT IRRITATION.

HMIS® Rating :

Health	1	-
Flammability	2	
Physical Hazard	0	

National Fire Protection Association (U.S.A.)

Personal protection	**B**
Other special considerations	PETROLEUM OIL: STEL = 10 mg/m³. Using terminology of the International Agency for Research on Cancer (IARC), the petroleum distillates listed in Section II are classified by the supplier as severely processed. Not all those listed in Section II may be present. The supplier has stated that these distillates do not require a carcinogen label as defined by OSHA 29 CFR 1910.1200.

History

Date of issue	07/27/2006.
Date of previous issue	07/18/2005.
Prepared by	Product Stewardship

Notice to reader

All reasonably practicable steps have been taken to ensure this data sheet and the health, safety and environmental information contained in it is accurate as of the date specified below. No warranty or representation, express or implied is made as to the accuracy or completeness of the data and information in this data sheet.

The data and advice given apply when the product is sold for the stated application or applications. You should not use the product other than for the stated application or applications without seeking advice from us.

It is the user's obligation to evaluate and use this product safely and to comply with all applicable laws and regulations. The BP Group shall not be responsible for any damage or injury resulting from use, other than the stated product use of the material, from any failure to adhere to recommendations, or from any hazards inherent in the nature of the material. Purchasers of the product for supply to a third party for use at work, have a duty to take all necessary steps to ensure that any person handling or using the product is provided with the information in this sheet. Employers have a duty to tell employees and others who may be affected of any hazards described in this sheet and of any precautions that should be taken.

CUSTOMER: B0207074
BATCH #: 012270030
ZONE #: 1HS1
BARCODE #: 093198051 0001
PRODUCT NAME: VOLTZ II RED

ORDER #: 50410
STICKER #: 012270600

MATERIAL SAFETY DATA SHEET: VOLTZ II RED

(000000-000000- -0849)

DATE OF ISSUE	SUPERSEDES
7/08/1999	4/16/1999

SECTION I - GENERAL INFORMATION

Chemical Name & Synonyms
N/A

Trade Name & Synonyms
VOLTZ II RED

Chemical Family:
ALIPHATIC/LIMONENE BLEND

Formula Mixture --> X

Manufacturer's Name:
CHEMSEARCH DIV. OF NCH CORP.

Address:
BOX 152170
IRVING, TX 75015

Prepared By:
R STOLLEY/CHEMIST

Product Code Number
0849

Emergency Phone Number
800-424-9300

SECTION II - HAZARDOUS INGREDIENTS
THE HAZARDS PRESENTED BELOW ARE THOSE OF THE INDIVIDUAL COMPONENTS

Chemical Name (Ingredients)	Hazard	TLV	PEL	STEL	CAS #
1-TETRADECENE	IRRITANT	NOT EST. 1	NOT EST. 2	NOT EST.	1120-36-1
D-LIMONENE	IRR./SENS.	NOT EST. 1	NOT EST. 2	NOT EST.	5989-27-5

SECTION IIa - NON-HAZARDOUS INGREDIENTS
(NON-HAZARDOUS INGREDIENT NAMES AND CAS NUMBERS ARE PROTECTED UNDER NJ TRADE)

Secret Registry #: 409363-5518P

SECTION III - PHYSICAL DATA

Boiling Point (F):	463	Specific Gravity (H20=1):	0.77
Vapor Pressure (MM HG):	0.13	Color:	RED
Vapor Density (Air=1):	5.2	Odor:	CITRUS
PH @ 100% :	N/A	Clarity:	TRANSPARENT
% Volatile by Volume:	100	Evaporation Rate (BU A/C=1):	<0.1
H2O Solubility:	NEGLIGIBLE	Viscosity:	NON-VISCOUS

SECTION IV - FIRE AND EXPLOSION HAZARD

Flash Point	Flammable Limits	LEL	UEL
201 F. / PMCC	D-LIMONENE	0.7	6.1

Extinguishing Media
X <--Foam <--Alcohol Foam X <--CO2 X <--Dry Chemical X <--Water Spray <--Other

Special Fire Fighting Procedures:
WEAR SELF-CONTAINED BREATHING APPARATUS AND PROTECTIVE CLOTHING. COOL FIRE EXPOSED CONTAINERS WITH WATER TO PREVENT RUPTURE. DO NOT USE A DIRECT STREAM OF WATER AS SPATTERING MAY RESULT.

Unusual Fire and Explosion Hazards:
IF PRODUCT IS HEATED GREATER THAN 201° F., VAPORS MAY TRAVEL TO DISTANT SOURCES OF IGNITION AND FLAHSBACK. PRODUCT MAY PRODUCE A FLOATING FIRE HAZARD AS LIQUID FLOATS ON WATER.

Aerosol Level (NFPA 30B): N/A

NFPA 704 Hazard Rating (0=Insignificant 1=Slight 2=Moderate 3=High 4=Extreme)
1 <--Health 1 <--Flammability 0 <--Instability <--Special

SECTION V - HEALTH HAZARD DATA

Threshold Limit Value:
NOT ESTABLISHED FOR MIXTURE. SEE SECTION II.

Effects of Overexposure:
-Acute (Short Term Exposure)
EYE: CAUSES IRRITATION SUCH AS REDNESS AND TEARING. SKIN: MAY CAUSE IRRITATION AND MAY RESULT IN AN ALLERGIC REACTION IN INDI- VIDUALS SENSITIVE TO PRODUCTS CONTAINING ORANGE OIL. FREQUENT OR PROLONGED CONTACT CAN LEAD TO REDNESS AND DERMATITIS. INHALATION: INHALATION MAY BE IRRITATING TO THE RESPIRATORY TRACT. INHALATION OF HIGH CONCENTRATIONS OF VAPOR DUE TO ELEVATED TEMPERATURES CAN CAUSE ANETHESIA, DROWZINESS, UNCONSCIOUSNESS, CNS EFFECTS AND DEATH . INDI- VIDUALS SENSITIVE TO ORANGE OIL MAY EXPERIENCE ALLERGIC RESPIRATORY RE- ACTION IF MIST IS INHALED OR IF HIGH VAPOR CONCENTRATIONS ARE INHALED. INGESTION: INGESTION AND SUBSEQUENT VOMITING OF THIS PRODUCT CAN LEAD TO ASPIRATION OF THE PRODUCT INTO THE LUNGS WHICH CAN CAUSE DAMAGE AND MAY BE FATAL.

SECTION V - HEALTH HAZARD DATA (Continued)

-Chronic (Long Term Exposure)
INDIVIDUALS SENSITIVE TO ORANGE OIL MAY BECOME SENSITIZED AND MAY HAVE A MORE PRONOUNCED ALLERGIC DERMAL OR RESPIRATORY REACTION IN SUBSEQUENT EXPOSURES. TARGET ORGANS: CENTRAL NERVOUS SYSTEM, BLOOD-FORMING ORGANS CONDITIONS AGGRIVATED BY EXPOSURE: PRE-EXISTING DERMAL AND RESPIRATORY DISEASES SUCH AS DERMATITIS AMD EMPHYSEMA.

Primary Routes of Entry: X <--Inhalation <--Ingestion X <--Absorption

Emergency and First Aid Procedures:
-Inhalation:
REMOVE FROM THE AREA TO FRESH AIR. SEEK MEDICAL ATTENTION IF RESPIRATORY IRRITATION DEVELOPS OR IF BREATHING BECOMES DIFFICULT.

-Eye Contact:
RINSE THE EYES WITH WATER. REMOVE ANY CONTACT LENSES AND CONTINUE FLUSHING WITH PLENTY OF WATER FOR SEVERAL MINUTES. SEEK MEDICAL ATTENTION IF IRRITATION DEVELOPS.

-Skin Contact:
WASH AFFECTED AREAS WITH PLENTY OF SOAP AND WATER FOR SEVERAL MINUTES. REMOVE AND CLEAN CONTAMINATED CLOTHING AND SHOES. SEEK MEDICAL ATTENTION IF IRRITATION DEVELOPS.

-Ingestion:
GIVE 3 TO 4 GLASSES OF WATER, BUT DO NOT INDUCE VOMITING. IF VOMITING OCCURS, GIVE FLUIDS AGAIN. GET IMMEDIATE MEDICAL ATTENTION. DO NOT GIVE ANYTHING BY MOUTH TO A CONVULSING OR UNCONSCIOUS PERSON.

-Notes to Physician:
N/A

SECTION VI - TOXICITY INFORMATION

Product Contains Chemicals Listed as Carcinogen or Potential Carcinogen By:
IARC--> No NTP--> No OSHA--> No ACGIH--> No OTHER--> No

DATA ON PRODUCT AS A WHOLE
ORL-RAT LD50: >5000MG/KG 3.
VOC INFORMATION: VOC CONTENT:770 GRAMS/LITER.
THIS MATERIAL IS PHOTOCHEMICALLY REACTIVE.

SECTION VII - REACTIVITY DATA

Stability: X <--Stable <--Unstable
Conditions to Avoid:
AVOID HEAT, SPARKS OR OPEN FLAMES.

Incompatibility (Materials to Avoid):
STRONG OXIDIZERS SUCH AS CHLORINE BLEACH OR CONCENTRATED OXYGEN, ACIDS AND IODINE PENTAFLUOROETHYLENE.

Hazardous Decomposition Products:
OXIDES OF CARBON, FUMES AND ACRID SMOKE.

Hazardous Polymerization: <--May Occur X <--Will Not Occur
Conditions to Avoid:
N/A

SECTION VIII - SPILL OR LEAK PROCEDURES

Steps to be Taken if Material is Released or Spilled:
ELIMINATE ALL SOURCES OF IGNITION. DIKE AND CONTAIN SPILL IF SAFE TO DO SO. USE ONLY NON-SPARKING EQUIPMENT. ABSORB WITH AN INERT MATERIAL AND TRANSFER INTO A PROPERLY LABELED CONTAINER FOR DISPOSAL. WEAR APPROPRIATE PROTECTIVE CLOTHING.

Waste Disposal Method(s):
DISPOSE OF THE PRODUCT AND ANY RESULTING SLUDGE THROUGH USE IN ACCORDANCE WITH ALL FEDERAL, STATE AND LOCAL REGULATIONS.

Neutralizing Agent:
N/A

SECTION IX - SPECIAL PROTECTION INFORMATION

Required Ventilation:
GENERAL VENTILATION IS NORMALLY ADEQUATE. LOCAL VENTILATION IS RECOMMENDED TO CONTROL EXPOSURE FROM OPERATIONS THAT CAN GENERATE MISTS OR VAPORS.

Respiratory Protection:
NONE REQUIRED UNDER NORMAL CONDITIONS OF USE. A NIOSH/MSHA APPROVED RESPIRATOR IN POORLY VENTILATED AREAS OR WHERE MISTING EXISTS.

Glove Protection:
NEOPRENE RUBBER OR NITRILE GLOVES SHOULD BE WORN.

Eye Protection:
SAFETY GLASSES WITH SIDE SHIELDS IF THE METHOD OF USE PRESENTS THE LIKELIHOOD OF EYE CONTACT.

Other Protection:
SOLVENT-RESISTANT APRON OR OTHER IMPERVIOUS CLOTHING TO AVOID CONTAMINATING REGULAR CLOTHING

SECTION X - STORAGE AND HANDLING INFORMATION

Storage Temperature: Indoors--> X Outdoors--> Heated--> Refrigerated-->
Minimum Temperature: 0 F. Maximum Temperature: 100 F.

Precautions to be Taken in Handling and Storing:
KEEP CONTAINERS CLOSED WHEN NOT IN USE. DO NOT HANDLE OR STORE NEAR HEAT, SPARKS, FLAMES, OR STRONG OXIDANTS. ADEQUATE VENTILATION IS REQUIRED

Other Precautions:
KEEP OUT OF REACH OF CHILDREN. READ ENTIRE LABEL BEFORE USING PRODUCT.

SECTION X - STORAGE AND HANDLING INFORMATION (Continued)

SECTION XI - REGULATORY INFORMATION

Chemical Name	CAS Number	Upper % Limit
None		

Those ingredients listed above are subject to the reporting requirements of 313 of Title III of the Superfund Amendments and Reauthorization Act of 1986 and 40 CFR part 372.

Please call 1-800-527-9919 for additional information if you are a California customer.
This MSDS is not intended for users in the state of California.

SECTION XII - REFERENCES

1. THRESHOLD LIMIT VALUES FOR CHEMICAL SUBSTANCES AND PHYSICAL AGENTS AND BIOLOGICAL EXPOSURE INDICES, ACGIH, 1999.
2. OSHA PEL
3. INDEPENDENT TESTING LABORATORY

ALL OF THE COMPONENTS WITHIN THIS PRODUCT CAN BE FOUND IN THE CURRENT TSCA INVENTORY.

IRR:IRRITANT, FLAM/FLAMM:FLAMMABLE, COMB:COMBUSTIBLE, CORR:CORROSIVE CARC:CARCINOGENIC. TOX:TOXIC, N/A:NOT APPLICABLE. N/E:NOT ESTABLISHED. COC:CLEVELAND OPEN CUP, PMCC:PENSKY-MARTIN CLOSED CUP, TCC:TAGLIABUE CLOSEDCUP, LEL:LOWER EXPLOSION LIMIT, UEL:UPPER EXPLOSION LIMIT, NFPA:NATIONAL FIRE PROTECTION ASSOCIATION, IARC:INTERNATIONAL AGENCY FOR THE RESEARCH ON CANCER, NTP:NATIONAL TOXICOLOGY PROGRAM, OSHA:OCCUPATIONAL SAFETY & HEALTH ADMINISTRATION, ACHGIH:AMERICAN CONFERENCE OF GOVERNMENTAL INDUSTRIAL HYGIENISTS, TLV:THRESHOLD LIMIT VALUE, PEL:PERMISSIBLE EXPOSURE LEVEL, STEL:SHORT-TERM EXPOSURE LIMIT, MLD:MILD, MOD:MODERATE, SEV:SEVERE, MUT:MUTAGENIC, ASPHYX:ASPHYXIANT, PNOC: PARTICULATES NOT OTHERWISE CLASSIFIED

THE INFORMATION CONTAINED HEREIN IS BASED ON DATA CONSIDERED ACCURATE IN LIGHT OF CURRENT FORMULATION. HOWEVER, NO WARRANTY IS EXPRESSED OR IMPLIED REGARDING THE ACCURACY OF THESE DATA OR THE RESULTS TO BE OBTAINED FROM THE USE THEREOF.

CHEMSEARCH DIV. OF NCH CORP. assumes no responsibility for personal injury or property damage caused by the use, storage, or disposal of the product in a manner not recommended on the product label. Users assume all risks associated with such unrecommended use, storage, or disposal of the product.

ATTACHMENT D

Phase I & II Environmental Site Assessment, Goodwill Industries of SW Michigan, 2700 N. Pitcher St., Kalamazoo Twp., Michigan, Envirologic Technologies, Inc., June 9, 2009

E N V I R O L O G I C
TECHNOLOGIES, INC.

PHASE I & PHASE II
ENVIRONMENTAL SITE ASSESSMENT

OF

GOODWILL INDUSTRIES OF SW MICHIGAN
2700 N. PITCHER ST.
KALAMAZOO TOWNSHIP
KALAMAZOO COUNTY, MICHIGAN

JUNE 9, 2009

Prepared For:

Brown Family Holdings, LLC
860 Gibson St.
Kalamazoo, MI 49001

&

Beckan Industries, Inc.
860 Gibson St.
Kalamazoo, MI 49001

Prepared by:

ENVIROLOGIC TECHNOLOGIES, INC.
2960 Interstate Parkway
Kalamazoo, Michigan 49048
(269) 342-1100

Table of Contents

EXECUTIVE SUMMARY **1**

OFF-SITE CONCERNS 2

INTRODUCTION **4**

PURPOSE 4
SITE LOCATION 5
SITE DESCRIPTION 5
PHYSICAL SETTING 5

ASSESSMENT OF PROJECT SITE **7**

METHODOLOGY 7
Data Sources *7*
Site Inspection *8*
Data Gaps and Data Failures *8*
USER'S RESPONSIBILITIES 9
PURCHASE PRICE 9
ENVIRONMENTAL LIENS AND CONTROLS 9
ZONING 10
SITE OWNERSHIP AND USE HISTORY 10
PREVIOUS ENVIRONMENTAL INVESTIGATIONS 13
SITE OBSERVATIONS 18
Interior Observations *19*
Exterior Observations *20*
CHEMICAL STORAGE AND WASTE DISPOSAL 21
UTILITIES 22
UNDERGROUND STORAGE TANKS AND ABOVE GROUND STORAGE TANKS 23
POLYCHLORINATED BIPHENYLS (PCBS) 26

ASSESSMENT OF IDENTIFIED SITES OF CONCERN **27**

ENVIRONMENTAL RADIUS REPORT 27
OBSERVATIONS OF ADJACENT PROPERTIES 32

PHASE II ENVIRONMENTAL SITE ASSESSMENT **34**

FIELD ACTIVITIES **34**

GROUND PENETRATING RADAR (GPR) GEOPHYSICAL SURVEY 34
SHIPPING/RECEIVING AREA – WEST 35
SHIPPING/RECEIVING AREA – EAST 36
ADDITIONAL GROUNDWATER CHARACTERIZATION 36
SUB-SLAB SOIL GAS INVESTIGATION 37

LABORATORY ANALYTICAL RESULTS **38**

SOIL/GROUNDWATER ANALYTICAL RESULTS 44
SUB-SLAB SOIL GAS ANALYTICAL RESULTS 45

CONCLUSIONS AND RECOMMENDATIONS **48**

OFF-SITE CONCERNS 50

FEDERAL BROWNFIELD AMENDMENTS TO CERCLA **51**

LIMITATIONS **52**

QUALIFICATIONS OF ENVIRONMENTAL PROFESSIONALS 53

List of Appendices

APPENDIX A: FIGURES
APPENDIX B: SITE PHOTOGRAPHS
APPENDIX C: ENVIRONMENTAL RADIUS REPORT
APPENDIX D: AERIAL PHOTOGRAPHS
APPENDIX E: SANBORN MAPS
APPENDIX F: FOIAR DOCUMENTATION (REQUESTS AND RESPONSES)
APPENDIX G: USER'S RESPONSIBILITIES DOCUMENTATION (USER/SELLER QUESTIONNAIRE)
APPENDIX H: GROUND PENETRATING RADAR (GPR) SURVEY REPORT
APPENDIX I: FIBERTEC LABORATORIES, INC. ANALYTICAL REPORTS
DATA VALIDATION REPORT

EXECUTIVE SUMMARY

Envirologic Technologies, Inc. (Envirologic) performed a Phase I Environmental Site Assessment (ESA) of a property located at 2700 N. Pitcher St., Kalamazoo Township, Michigan (subject property). The Phase I ESA has been performed in accordance with the ASTM standard practice for Phase I ESAs (Standard E1527-05). Envirologic developed and performed the AAI in conformance with the federal rule. Non-CERCLA issues that are not typically part of the ASTM standard scope of investigation (i.e., asbestos, lead paint, radon, mold, wetlands and universal wastes) were not addressed as part of this Phase I ESA. The Phase I ESA was conducted for the purchase of the property. This report was prepared for the exclusive use of Brown Family Holdings, LLC and Beckan Industries, Inc., who may rely on the report contents.

The subject property consists of one parcel of land occupying approximately 7.3 acres. The site is developed with an approximately 58,500-square-foot warehouse/office building resting on concrete slab on grade. Asphalt cover is in place surrounding the building. A combination of asphalt/concrete cover is also in place over portions of the property located east of the subject building. The remainder of the subject property consists of grass/scrub field and lightly wooded areas. A cellular phone tower is located on the eastern portion of the subject property. The site was initially developed by the Upjohn Pharmaceutical Company for warehousing activities sometime prior to 1950. Since approximately 1960, Goodwill Industries of SW Michigan has owned/operated the site. Historic Goodwill site use activities involved the former presence of a gasoline underground storage tank on the subject property as well as the use of tetrachloroethene in support of former dry cleaning operations.

We have performed a Phase I Environmental Site Assessment in conformance with the scope and limitations of ASTM Practice E 1527-05 of property located at 2700 N. Pitcher St., Kalamazoo Township, Michigan, the property. There were no exceptions to, or deletions from, this practice. This assessment has revealed no evidence of Recognized Environmental Conditions in connection with the property; except the following:

- The subject property meets the definition of a “facility,” as defined by Part 201 of NREPA based upon the concentrations of select petroleum and halogenated volatile organic compounds identified in soil/groundwater;
- The subject property is identified as an “open” MDEQ Leaking Underground Storage Tank (LUST) site based upon a gasoline release reported in 2007;

- Tetrachloroethene was historically utilized on the subject property in support of dry cleaning operations. The concentrations of volatile halocarbons in soil and sub-slab soil gas beneath the subject building exceed Industrial Volatilization to Indoor Air and Acceptable Soil Gas Screening Concentrations. The contaminant conditions indicate the necessity for on-going future operation of a Soil Vapor Extraction (SVE) system in order to satisfy "due care" obligations associated with occupancy of the subject building.

Based upon the identified contaminant conditions, a Baseline Environmental Assessment and Section 7a Compliance Analysis will be completed on behalf of Brown Family Holdings, LLC and Beckan Industries, Inc. in order to maintain remedial liability exemption and document satisfaction of on-going "due care" obligations.

In addition, Envirologic presents the following recommendations:

- Brown Family Holdings, LLC and Beckan Industries, Inc. should be aware of the necessity for on-going operation of the SVE system in the future in order to unsure that no unacceptable health exposures will occur as a result of occupancy of the building;
- Brown Family Holdings, LLC and Beckan Industries, Inc. should be aware of potential site use restrictions (prohibiting the development of groundwater, maintenance of impervious cover) and on-going liable party access proposed to respond to contaminant conditions identified on the subject property;
- Impervious cover should be put in-place over the area of bare soil associated with the former UST vault near the northeast corner of the subject building;
- Miscellaneous debris and rubbish present on eastern portions of the subject property should be removed and properly disposed;
- The water tower present on the eastern portion of the site should be properly removed from the subject property.

Off-site Concerns

The potential for off-site activities to adversely impact the subject property has been evaluated. MDEQ file information indicates the presence of vinyl chloride in groundwater on western portions of the subject property that is attributed to the off-site Borroughs property located hydraulically up gradient of the subject property. The concentration of vinyl chloride identified on western portions of the subject property

exceeds the Industrial Drinking Water criterion. There are no exceedances of additional exposure pathways relative to the groundwater contaminant conditions identified on up gradient portions of the subject property. Brown Family Holdings, LLC should be aware of any potential discussion Goodwill has completed with Borroughs regarding future site access and proposed site use restrictions.

PHASE I AND PHASE II ENVIRONMENTAL SITE ASSESSMENT OF GOODWILL INDUSTRIES OF SW MICHIGAN 2700 N. PITCHER ST. KALAMAZOO TOWNSHIP, MICHIGAN

INTRODUCTION

Envirologic Technologies, Inc. (Envirologic) has conducted a Phase I Environmental Site Assessment (ESA) of property located at 2700 N. Pitcher St., Kalamazoo Township, Michigan (subject property). The Phase I ESA has been performed in accordance with the American Society for Testing and Materials (ASTM) Standard Practice for Phase I ESAs (Standard E1527-05). Envirologic developed and performed the AAI in conformance with the federal rule. Non-CERCLA issues that are not typically part of the ASTM standard scope of investigation (i.e., asbestos, lead paint, radon, mold, wetlands and universal wastes) were not addressed as part of this Phase I ESA. This Phase I ESA was conducted to identify conditions indicative of releases or threatened releases of hazardous substances or petroleum products (Recognized Environmental Conditions) and potential environmental liabilities associated with the property, and to meet the standards of all appropriate inquiry.

The Phase I ESA was comprised in significant part of a records review and a visual site inspection. The information gathered during the Phase I ESA was limited to that which could be reasonably ascertained from administrative sources and to visual observations made during the site inspection. Therefore, the ESA interpretations made herein are in the context of the data limitations. While Phase I ESA data is informative in nature, it is necessarily limited.

Purpose

The purpose of this assessment was also to meet the requirements of All Appropriate Inquiry in order to pursue liability protection. Brown Family Holdings, LLC intends to purchase the subject property. Beckan Industries, Inc. will occupy the property in support of precision machining activities. Envirologic Technologies, Inc. recognizes Brown Family Holdings, LLC's and Beckan Industries, Inc.'s (the users) reliance upon the contents of the Phase I ESA as part of the process of evaluating the environmental risks associated with the subject property.

Site Location

The subject property is located at 2700 N. Pitcher St., Kalamazoo Township, Michigan (subject property). Specifically, the site is located within the Section 3, Township 2S, Range 11W in Kalamazoo Township, Kalamazoo County, Michigan (refer to Figure 1 in Appendix A). The subject property consists of one parcel of land occupying approximately 7.3 acres. The tax identification number and legal description, as provided by Kalamazoo County, are as follows:

2700 N. PITCHER ST. (PARCEL ID # 06-03-460-010)

1002300 3906 03 460 010 G3-51 2B SEC 3-2-11 COM AT S1/4 POST SEC 3 TH W ALG S LI SD SEC 45.13 FT TO CTR LI PITCHER ST TH N 10DEG 39MIN W THEREON 870.84 FT TH S 89DEG 48MIN E 33.58FT TO E LI SD ST FOR PL BEG TH S 89 DEG 48MIN E 1172.49 FT TO W LI GTW RR ROW TH S 0DEG 31 MIN W THEREON 279.01 FT TH N 89 DEG 48 MIN W 1117.53 FT TO E LI SD ST TH N 10 DEG 39 MIN W THEREON 283.89 FT TO BEG ..... 7.33A CELL TOWER ON 3-904-010

Site Description

The subject property is developed with a 58,500-square-foot building resting on concrete slab on grade. Asphalt cover is in place surrounding the building. A combination of asphalt/concrete cover is also in place over portions of the property located east of the subject building. The remainder of the subject property consists of grass/scrub field and lightly wooded areas. A cellular phone tower is located on the eastern portion of the subject property. A Kalamazoo County drain, the Zantman Drain, is present along the eastern boundary of the subject property. A more complete description of the project site is provided in the *Site Observations* section of this report. Color photographs of the property are included as Appendix B.

Physical Setting

According to the United States Geological Survey, the subject property is relatively flat and rests at an elevation of 760 feet above mean sea level. The property slopes slightly from west to east. The Zantman County drain is located along the eastern property boundary of the subject property. The nearest major surface water body is the Kalamazoo River, located approximately 800 feet east of the subject property.

The Kalamazoo County Soil Survey identifies soil underlying the property to be urban land of the Kalamazoo association. The following site geology was identified during Phase II ESA activities conducted by Envirologic in March of 2009: lenses of poorly-

sorted, fine- to coarse-grained, gravelly sand inter-bedded with a brown clayey sand of low plasticity with trace amounts of gravel. Groundwater was encountered within a poorly-sorted, gravelly sand lense approximately four feet below grade level (bgl) on the east side of the property to 10 feet bgl on the west side of the property. Hydrogeologic data previously generated on site by DeLisle and Associates, Inc. and Fleis & Vandenbrink indicated a southeasterly groundwater flow direction on the subject property.

ASSESSMENT OF PROJECT SITE

Methodology

The Phase I ESA has been performed in accordance with the American Society for Testing and Materials (ASTM) Standard Practice for Phase I ESAs (Standard E1527-05). Additional non-CERCLA issues that are not typically part of ASTM standard scope of investigation (i.e., asbestos, radon, wetlands, mold, lead-based paint and universal wastes) were not addressed as part of this Phase I ESA.

Data Sources

The following sources of information were utilized to assist in the environmental assessment of the subject property:

- Kalamazoo, Michigan USGS 7.5 Minute Topographic Quadrangle, 1967, photo revised 1973
- USDA Soil Conservation Service Soil Survey of Kalamazoo County, Michigan, 1978
- MDEQ Web site for Environmental Liens
- User's / Seller's Questionnaire
- Environmental Radius Report for the subject property, generated January 7, 2009 by Environmental Data Resources, Inc.
- Aerial photographs dated 1938, 1955, 1960, 1967, 1974, 1981, 1992 and 2005 (1″=500'-600') obtained from Environmental Data Resources, Inc.
- Sanborn Fire Insurance maps dated: 1950, 1958, 1965 and 1972 obtained from Environmental Data Resources, Inc.
- City of Kalamazoo Directories from 1971 to 2003, available from the City of Kalamazoo Public Library
- Various Plat maps and Land Atlas' from 1919 to 1998, available from the City of Kalamazoo Public Library
- Multiple environmental reports, including:

  Additional Investigation Activities, 2700 N. Pitcher St., Kalamazoo, MI, June 2009, DeLisle Associates LTD;

  Site Investigation Report and Interim Response Activities for Soil Beneath the Building, 2700 N. Pitcher St., Kalamazoo, MI, April 2009, DeLisle Associates LTD;

  Hydrogeologic Investigation at 2700 N. Pitcher St., Kalamazoo, MI, May 2008, Fleis & Vandenbrink;

- Review of publicly available information obtained from the following Kalamazoo Township and County offices:
  - Records/Building Department
  - Assessing/Zoning
  - Health Department
  - Public Works

Site-specific information obtained from personal and telephone interviews with the following people:

- Mr. John Dillworth – Goodwill Industries of SW Michigan, Inc.
- Mr. Chuck Kinnanne – Prudential Realtors
- Mr. Andy Graham – DeLisle Associates, LTD
- Mr. Eric Walters – Fleis & Vandenbrink Engineering, Inc.
- Mr. Shawn Brown – Brown Family Holdings, LLC
- Chief Ronald Farr – Kalamazoo Township Fire Marshall

Site Inspection

Envirologic conducted site inspections of the property on: January 21 and February 18, 2009. Mr. Kinnanne and Mr. Brown were available to answer questions regarding the property. All areas of the property were accessible. Due to significant snow cover during the January 21, 2009 site inspection, the follow-up inspection was conducted in order to further evaluate exterior portions of the property. Weather conditions during the February 18, 2009 inspection consisted of clear skies with temperatures in the 50s °F. Snow cover was not a limitation during the February 18, 2009 inspection.

Data Gaps and Data Failures

A data gap is the inability to obtain information within the scope of the Phase I ESA. The following data gap was encountered for the Phase I ESA: the lack of site contacts familiar with historic operations. A data failure is the absence of information typically used to complete a Phase I ESA. No significant data failures were identified through the course of the Phase I ESA.

Due to the availability of other data sources (e.g. aerial photographs, personal interviews, and previous reports), the data gap has not significantly impacted the ability of Envirologic to identify Recognized Environmental Conditions in association with the subject property.

User's Responsibilities

The user (Mr. Shawn Brown – Brown Family Holdings, LLC) was interviewed and completed a User Questionnaire (Appendix G). The user was not aware of any environmental or activity use limitations recorded against or relating to the property.

The user did not have actual knowledge of environmental liens or activity use limitations encumbering or in connection with the property.

The user did not have specialized knowledge or experience material to Recognized Environmental Conditions in connection with the property.

Purchase Price

A purchase price significantly less than the market value of the property may indicate contamination on the property. The user and property purchaser, Mr. Shawn Brown, indicated to Envirologic that the purchase price represented fair market value for the property. Previously completed site characterization activities indicate that the subject property meets the definition of a "facility," as defined by Part 201 of NREPA due to contaminant conditions identified in association with the site.

Environmental Liens and Controls

The MDEQ RRD Cost Recovery Unit Web site was queried regarding potential environmental liens on the subject property. According to the MDEQ Web site, no environmental liens were listed for the project site. No indications of institutional or engineering controls were identified on the tax card obtained from the City of Kalamazoo Assessor's Office.

Although not formally in-place to date, the contaminant conditions on the subject property indicate that a site use restriction prohibiting the development of groundwater as a potable water supply will be required in support of MDEQ "closure" for the identified groundwater contaminant conditions. The placement of a groundwater use restriction is anticipated to be part of the remedial approach associated with both groundwater impact emanating onto western portions of the subject property as well as soil/groundwater contaminant conditions attributed to historic on-site activities. Based upon the presence of a municipal water supply connection to the subject building, the placement of a groundwater use restriction on the subject property does not appear to represent a significant concern for future use or redevelopment of the site. An additional potential

site use restriction may require the maintenance of impervious cover over select areas of identified soil impact to reduce the likelihood of leaching of contaminants from soil to groundwater.

A Soil Vapor Extraction (SVE) system has been installed beneath the subject building by DeLisle and Associates, LTD. on behalf of Goodwill. The SVE system will be utilized to address the potential for unacceptable health exposures in association with volatilization of contaminants to indoor air based upon the concentrations of volatile halocarbons in soil and sub-slab soil gas beneath the subject building. Brown Family Holdings, LLC should be aware of the necessity for the continued operation of the SVE system in the future to satisfy "due care" obligations associated with occupancy of the building. Brown Family Holdings, LLC should be aware of any site use restrictions that may be proposed for placement on the subject property in order to address contaminant conditions.

Zoning

The subject property is zoned "I – Industrial."

Site Ownership and Use History

The earliest site ownership information was obtained from an 1861 land atlas, which identified Bassett & Bates as the owner of the subject property and surrounding land. The 1872 atlas also identifies Bassett & Bates as the owner of the subject property and surrounding land. By the time of the 1890 plat map, H. Tyson is identified as the owner of the subject property. Subsequent plat maps from 1910, 1913, 1919 and 1928 identify M.O. Allen as the owner of the subject property.

The first aerial photograph coverage for the property is dated 1938. The subject property is depicted as undeveloped at that time. The warehouse building currently located immediately north of the subject property had already been constructed by the time of the 1938 aerial photograph. The Upjohn Company developed the parcel to the north with the warehouse building. By the time of the 1950 sanborn map, the subject building and three additional warehouse buildings formerly located east of the existing building have been constructed. This represents the first development of the subject property. Due to incomplete file information available through Kalamazoo Township, the exact date of initial development of the subject property could not be identified. However, the historic aerial photographs and sanborns indicate the property was first developed by the Upjohn

Company between 1938 and 1950. The 1950 sanborn map identifies the current subject building as a finished products warehouse. The three outbuildings to the east are identified as raw materials warehouses. The outbuildings historically occupied approximately 10,800 square feet each. The water tower located on the eastern portion of the property is in-place at this time and depicted as having a 50,000-gallon capacity. A rail spur is depicted as entering the subject property from the east and running along the northern boundary of the subject property. By the time the 1958 sanborn was prepared, the three outbuildings had been removed from the subject property. The existing building is labeled as Bus Storage in the 1958 sanborn.

The subject building and the concrete foundations for the former outbuildings are clearly evident in the 1960 aerial photograph. The presence of a rail spur entering the east side of the subject property and terminating near the northwest corner of the subject building is also evident. Increased industrial development west of the subject property is apparent in the 1960 aerial photograph. The first city directory listing for the Upjohn Company on N. Pitcher appears in 1938. A specific building number is not provided in the directory, simply a reference to Upjohn Warehouse. Based upon available aerial photographs, the initial city directory listings refer to the Upjohn Warehouse located north of the subject property. The Upjohn Warehouse continues to be listed on N. Pitcher in subsequent city directory listings until 1957. No reference to Upjohn or 2700 N. Pitcher are presented in city directories from 1958-1960. The Seller's Environmental Questionnaire, completed by Mr. John Dillworth of Goodwill, indicates that Goodwill acquired the subject property from Upjohn in 1960. Although a specific purchase date was not provided by the Kalamazoo Township Assessor, this appears consistent with city directory listings. The listings for the subject property in city directories subsequent to 1960 identify Goodwill Industries of SW Michigan as the occupant of the site. The 1965 sanborn map depicts the subject building as being occupied by Goodwill Industries Warehouse. By the time of the 1967 aerial photograph, the concrete foundations associated with the former outbuildings east of the main warehouse appear to have started to deteriorate/weather. Remnants of the rail spur entering the eastern boundary of the subject property are evident in the 1967 aerial, but it is not clear if the spur continues to extend north of the subject building at this time. The last available sanborn map, dated 1972, depicts the subject property similarly to the 1965 sanborn with both maps indicating the continued presence of the rail spur.

By the time of the 1974 aerial photograph, the Zantman drain located on the eastern portion of the subject property is apparent for the first time. A portion of the east side of the subject property appears to be cleared of trees and utilized for parking in the 1974 aerial. The parking appears to be in support of the building to the north of the property, as opposed to the subject building. City directory listings from 1975 to 1990 identify the subject property as being occupied by Goodwill Industries and Jenkins Vocational Rehabilitation. The 1981 aerial photograph is of poor quality, but the image appears to depict the property similarly to the 1974 photograph. By the time of the 1992 aerial, the eastern portions of the subject property appear more heavily wooded. Continued expansion of industrial operations to the west and south of the subject property are apparent in the 1974, 1981 and 1992 images. The 1995 city directory identifies the subject property as being occupied by Goodwill Industries and Quality Assured Contract Employment.

The 2005 aerial photograph depicts the subject property similarly to how it appeared at the time of the site inspection. The cellular tower is evident in aerial photographs for the first time in the 2005 photograph.

In summary, the subject property was initially developed by the Upjohn Company sometime between 1938 and 1950. Based upon city directory listings and sanborn map depictions, it would appear that Upjohn utilized the site primarily for warehousing activities as opposed to pharmaceutical processing. As such, the potential for impact from historic Upjohn operations would appear to be limited. However, the historic presence of a “solvent storage building” (as detailed on site plans provided by DeLisle) associated with Upjohn operations indicates the potential historic presence of hazardous substances on the subject property. The site continued to be utilized for the warehousing of materials by Upjohn until Goodwill Industries of SW Michigan purchased the site in approximately 1960. Since 1960, Goodwill Industries of SW Michigan has owned and occupied the site. Goodwill Industries of SW Michigan, a not-for-profit organization, provides education, training and employment services to people who live with disabling conditions and other special needs to maximize their employment potential. Goodwill has utilized the subject property in support of their Industrial Services operations. Historic activities conducted in support of Industrial Services include: product assembly and light manufacturing; corrugated die-cutting; chip board die-cutting and shearing; sewing; drilling, deburring, sorting, inspecting and manual rework operations.

Historic Goodwill activities have also included dry cleaning operations and the use of an underground storage tank (UST) containing gasoline for the fueling of fleet vehicles. Dry cleaning operations on the subject property reportedly took place from 1966 until 1982. Dry cleaning activities were conducted in south-central portions of the subject building. The historic use of the subject property for dry cleaning operations and the historic presence of a gasoline UST have been identified as Recognized Environmental Conditions. Refer to the Previous Environmental Investigations and Phase II ESA section below for further details regarding the identified Recognized Environmental Conditions.

Previous Environmental Investigations

The subject property is identified as an "open" Leaking Underground Storage Tank (LUST) site with the MDEQ. A 5,000-gallon gasoline UST was formerly located near the northeast corner of the subject building. The tank was removed from the property in 1987. A release in association with the former UST was reported in 2007, based upon site characterization activities completed on the subject property by Fleis & Vandenbrink on behalf of Goodwill. Release response activities associated with identified petroleum impact have been conducted by Fleis & Vandenbrink since that time. Envirologic has reviewed available MDEQ documentation pertaining to the UST release. Petroleum impact to soil and groundwater at "facility" concentrations was initially identified in the vicinity of the former UST vault and dispenser locations. The "open" status of the UST release has been identified as a Recognized Environmental Condition. A thorough discussion of the environmental investigations associated with the UST release is presented in the Underground Storage Tank section below.

Fleis & Vandenbrink completed a Hydrogeologic Investigation of the subject property on behalf of Goodwill in May of 2008. The full report is available for review through the MDEQ. A summary is provided below.

The Fleis & Vandenbrink investigation was completed to address the following areas of concern:

- The lack of documentation or assessment regarding the former presence of the gasoline UST on the subject property;
- The potential for soil and groundwater impact associated with the historic use of a septic system on the subject property;

- The potential for PCBs impact to the subject property from off-site discharge into the Zantman County drain present on the eastern portion of the site;
- The historic use of tetrachloroethene on site associated with former dry cleaning operations.

The scope of the investigation included the installation of 37 Geoprobe™ soil borings for the collection of soil and groundwater samples; the installation of two hand-auger borings within the subject building; and the collection of two sediment samples.

As detailed above, the results of the investigation identified petroleum impact to soil, as well as petroleum and lead impact to groundwater near the northeast corner of the building attributed to the former gasoline UST vault area and dispenser location.

No indications of PCBs impact associated with sediments from the drainage culvert or Zantman drain were identified.

Volatile halocarbon impact was identified beneath the building in association with former dry cleaning operations and exterior locations associated with the former septic system on the south side of the subject property. Specifically, the concentration of tetrachloroethene identified in soil from two soil samples collected beneath the building exceeded the current Industrial Drinking Water Protection criterion. The concentrations of tetrachloroethene in groundwater from the former septic system leach field exceed the Industrial Drinking Water criterion. The concentration of tetrachloroethene in groundwater along the southern property boundary exceeds both the Industrial Drinking Water criterion and the Groundwater-Surface Water Interface (GSI) criterion. In addition to tetrachloroethene, the volatile halocarbon degradation products trichloroethene and vinyl chloride were detected in groundwater along the southern property boundary at concentrations in excess of Industrial Drinking Water criteria.

The Fleis & Vandenbrink investigation included the characterization of groundwater on the off-site parcel located immediately south of the subject property. Based upon a calculated south/southeasterly groundwater flow direction, characterization of groundwater was conducted on the parcel to the south in order to investigate the potential for contaminants to be emanating from the subject property. Volatile halocarbon impact to groundwater was identified on the adjacent parcel to the south as a result of the investigation. Specifically, tetrachloroethene, trichloroethene, cis-1,2-dichloroethene,

and vinyl chloride have been identified in groundwater on the off-site parcel to the south at concentrations in excess of the Industrial Drinking Water and/or GSI criteria.

The identification of petroleum and volatile halocarbon compounds in soil and groundwater on the subject property at "facility" concentrations has been identified as a Recognized Environmental Condition. Fleis & Vandenbrink have indicated that vinyl chloride impact to groundwater identified along the western boundary of the subject property is attributable to contamination emanating from the off-site Borroughs property. MDEQ file information indicates the presence of a groundwater monitoring well on the western portion of the subject property (MW-19d) installed to investigate volatile halocarbon groundwater impact emanating onto the subject property from the off-site Borroughs property (3002 N. Burdick St.). The most recent MDEQ file information for the Borroughs site is a 4th Quarter 2008 Groundwater Monitoring Event completed by Fishbeck, Thompson, Carr & Huber. The report presents the analytical results for groundwater monitoring well MW-19d, in addition to a well located down gradient of the former gasoline UST (MW-4). The MW-19d results indicate the presence of vinyl chloride in groundwater in excess of the Industrial Drinking Water criterion. File information indicates that Borroughs is pursuing the placement of a groundwater use restriction on the subject property (Goodwill site) in support of MDEQ "closure" for the release emanating onto the subject property. Brown Family Holdings, LLC should be aware of the status of potential discussions between Goodwill and Borroughs regarding site use restrictions for the subject property.

Based upon the volatile halocarbon contaminant conditions identified by Fleis & Vandenbrink, Goodwill engaged DeLisle Associates LTD to conduct site characterization activities in association with volatile halocarbon impact on the subject property. A summary of DeLisle investigation activities is provided below. Refer to the *Additional Investigation Activities* and *Site Investigation Report and Interim Response Activities for Soils Beneath the Building* for further details (Appendix F).

DeLisle has installed 41 soil borings across the subject property for the collection of soil and groundwater samples. Select sample locations have been completed with permanent groundwater monitoring wells on the subject property. In addition, seven soil gas sampling wells have been installed within the subject building. The sampling has focused on the following areas: former dry cleaning rooms within the south side of the building; former solvent storage building and former septic systems located along the

southern property boundary; and the former UST vault area near the northeast corner of the subject building. A site plan prepared by DeLisle detailing boring locations is presented in Appendix A. The volatile halocarbons tetrachloroethene, trichloroethene, cis-1,2-dichloroethene and vinyl chloride were identified in soil beneath the building and exterior former septic system and UST vault locations at concentrations in excess of the Residential Drinking Water Protection and/or Groundwater-Surface Water Interface Protection (GSIP) criteria. The concentrations of tetrachloroethene in soil beneath the building at locations proximal to a former dry cleaning room (BH-4, BH-8) are in excess of the Industrial Soil Volatilization to Indoor Air Inhalation criterion. Based upon the potential for unacceptable health exposures relative to occupancy of the building associated with the concentrations of tetrachloroethene, DeLisle collected three air samples for volatile halocarbons analysis from within the building on November 10, 2008. The sampling activities and results are presented in a report prepared by DeLisle in November of 2008 and available for review through the MDEQ. The following sample locations were selected by DeLisle: the office/administrative area within the western portion of the building, an area of the warehouse to be occupied by Beckan Industries in the future, and from within the former dry cleaning room. No recordable levels of contaminants of concern were identified in the three air samples. The limited air sampling results indicated that no unacceptable health exposures relative to building occupancy were identified at that time. However, MDEQ guidance indicates that a one time sampling event does not represent sufficient characterization to determine that no unacceptable health exposures will occur in the future.

Envirologic conducted sub slab soil gas sampling in order to further evaluate the potential for unacceptable health exposures associated with occupancy of the building. The concentrations of tetrachlorothene in sub slab soil gas at select locations are in excess of the Industrial Acceptable Soil Gas Screening Concentrations (ASGSCs). Refer to the Phase II ESA section below for further details on the sub slab soil gas sampling. The soil gas sampling results indicate the necessity for a remedy to ensure no unacceptable health exposures will occur in association with occupancy of the building.

DeLisle has completed installation of a Soil Vapor Extraction (SVE) system within the subject building in order to address the contaminant conditions identified beneath the building. The system consists of four (4) two-inch diameter wells with a five-foot screened interval located in southern portions of the building. The system is set up to run each extraction well at 25 SCFM each for a total air flow rate of 100 SCFM. A site plan

detailing the SVE system lay-out along with additional detail on system performance is presented within the DeLisle report (Appendix F). On-going operation of the SVE system is intended to achieve two goals: reduction in soil contaminant levels through the carbon treatment of soil gas vapors and creation of a negative pressure environment within areas of identified impact beneath the building. Maintenance of negative pressure beneath appropriate portions of the building will preclude the potential for unacceptable health exposures relative to occupancy of the structure.

The most recent documentation provided by DeLisle details the results of soil and soil gas sampling conducted beneath the subject building in May of 2009 (Appendix F). The soil sampling was completed in order to delineate the extent of soil impact in excess of Industrial Volatilization to Indoor Air cleanup criteria. The soil gas sampling was conducted to further characterize site conditions and evaluate the performance of the SVE system. Specifically, the soil gas sampling wells were installed to evaluate conditions within the 5 ft. below grade level (bgl) interval. As detailed in the DeLisle correspondence, pressure readings from the soil gas sampling locations demonstrates that the radius of influence for the four extraction points of the SVE system are sufficient to address the areas of identified soil impact beneath the building. Thus, the DeLisle documentation from the May 2009 sampling event demonstrate that operation of the SVE system represents an appropriate presumptive remedy and ensure that no unacceptable health exposures will occur as a result of occupancy of the building relative to the volatilization of contaminants to indoor air.

Volatile halocarbon impact to groundwater has also been identified as a result of the DeLisle investigation. Tetrachloroethene and the dehalogenation daughter compounds trichloroethene, cis-1,2-dichlorothene and vinyl chloride have been identified in groundwater across the subject property at concentrations in excess of Residential/Industrial Drinking Water and/or GSI criteria. The concentrations of volatile halocarbons identified along the southern property boundary, south of the former septic system, indicate that contaminants are migrating beyond the subject property onto the parcel to the south in excess of Residential Drinking Water and/or GSI criteria. Sampling completed by DeLisle included the vertical characterization of groundwater from the following general intervals: 10-12 feet bgl; 19-21 feet bgl; and 35-37 feet bgl. The specific intervals sampled at any one given location may have varied slightly based upon site conditions. Although a potential increase in concentration with depth might be expected for dense non-aqueous phase liquids (DNAPLs) such as volatile halocarbons, no

consistent trend to the contaminant concentrations relative to depth was identified. A slight increase in vinyl chloride concentrations at depth was noted for multiple sample locations. The varying ranges of identified contaminant concentrations did not result in exceedances of additional exposure pathways beyond the Drinking Water and GSI Cleanup criteria. Groundwater impact identified on the western portion of the subject property has been attributed by DeLisle to the migration of volatile halocarbon impact from the off-site up gradient Borroughs property.

In addition to the volatile halocarbons, bromomethane was identified in soil beneath the asphalt parking lot on the south side of the building. The concentrations of bromomethane identified in soil exceed the Residential Drinking Water Protection and/or GSI Protection criteria. At this time, it is not clear if the bromomethane impact is associated with the former presence of a solvent storage building on the southern portion of the property.

Finally, tetrachlorothene impact to shallow soils in excess of Industrial Drinking Water and/or GSI criteria was also identified in the former UST vault area near the northeast corner of the subject building.

As indicated, Fleis & Vandenbrink is conducting response activities in association with the identified gasoline UST release and DeLisle is conducting response activities in association with the identified volatile halocarbon contaminant conditions. Brown Family Holdings, LLC should be aware of the need for Goodwill to have on-going access to the property in the future to conduct response activities. In addition, Brown Family Holdings, LLC should be aware of any potential site use restrictions that are proposed for the property in order to achieve MDEQ "closure" for the identified contaminant conditions.

Site Observations

Erik Peterson, Project Manager with Envirologic, conducted site inspections of the property on January 21 and February 18, 2009. Mr. Shawn Brown was available to answer questions regarding property use. All areas of the property were accessible. Approximately 12 inches of snow cover was present on exterior portions of the subject property during the January 21, 2009 site inspection. Weather conditions consisted of clear skies with temperatures in the 50s °F during the February 18, 2009 site inspection. By the time of the February 18 inspection, significant melting of snow had occurred,

which permitted direct observation of the ground surface over the majority of exterior portions of the property.

Interior Observations

The southwestern corner of the subject building consists of approximately 10,000 square feet of office/administrative space. This area was observed to contain individual offices, a reception area, conference rooms, restrooms and storage rooms. The office/administrative areas were primarily vacant at the time of the site inspection.

A series of four truck bays are present in the northwest corner of the subject building. The two northernmost bays and the southernmost bay were empty at the time of the site inspection. The fourth bay in the northwest corner of the subject building is filled with two vehicles and storage shelves containing miscellaneous items. Goodwill has been leasing the bay as storage space to a private individual. The concrete floor of the shipping/receiving bays was observed to be in good condition, with minor pitting and cracking, but no staining evident. Beckan Industries, Inc. has indicated that they will utilize the southernmost bay for shipping/receiving activities. The concrete floor of this bay was observed to be in good condition. An area of minor concrete cracking was observed at the west end of the bay. The extent of the observed cracking did not represent a pathway for the migration of fluids to the subsurface in the event of a surficial release.

An open room formerly utilized as the retail store for Goodwill is present east of the shipping/receiving area. The majority of the subject building consists of open warehouse space. No floor drains were observed in the warehouse portions of the building. The concrete floor of this portion of the building was observed to be in fair condition, with no staining, but some cracking evident. The extent of the observed cracking does not represent a pathway for the migration to the subsurface of a potential surficial fluid release within the building. Further, no indications of damage to the floor that would represent a potential preferential pathway for volatilized contaminants to migrate from beneath the slab in the building were observed.At the time of the site inspection, the majority of the building was occupied by pallets of boxes being warehoused by Goodwill containing clothing, shoes and books. No concerns were noted in association with the warehousing of materials within the subject building. The warehouse area is divided into two sections by a wall with sliding doors. Goodwill will continue to lease the

easternmost portion of the building (approximately 18,000 square feet) from Brown Family Holdings, LLC in the future for the warehousing of clothing items and books.

Exterior Observations

The subject building is situated within the northwestern corner of the subject property. Asphalt cover is in place around the perimeter of the building, with the exception of a small area of landscaped lawn near the southwest corner of the building. The asphalt was observed to be in fair condition, with some cracking but no staining evident. An asphalt covered parking lot is present south of the building which extends to the southern property boundary. Asphalt cover is in place north of the building, along the northern property boundary. A combination of asphalt and concrete cover is in place east of the subject building. Portions of the concrete cover in this area are associated with the footprint of former warehouse buildings historically utilized by Upjohn. The concrete cover was observed to be in fair/poor condition, with pitting and cracking, but no staining evident.

A two-track road is present south of the asphalt/concrete cover, near the southern property boundary. The two-track leads to a cellular tower located on the eastern portion of the property. The cellular tower is staged within a 2,250 square-foot fenced secured area. No concerns in association with the cellular tower were noted.

The water tower is located east of the cellular tower area. A concrete pad is in place at the base of the water tower. An apparent "cistern" or confined space containing plumbing and a pump for the water tower is associated with the concrete base. No odor, staining or indications of environmental concerns were noted in association with the water tower. Nevertheless, Envirologic recommends that the water tower be removed and properly disposed, based upon the completed municipal water connection for the subject property.

Miscellaneous debris and rubbish was observed within the wooded eastern portions of the subject property. Materials observed within this area included: residential rubbish such as furniture and clothing remnants and plastic bottles; scrap wood and automotive tires; and miscellaneous metal debris, including an empty 55-gallon drum and smaller containers. No indications of soil staining or odors were noted in association with containers. Based upon the significant rusting and condition, the containers appeared to have been present for a long period of time. Although no indications of contamination

were noted, Envirologic recommends that all rubbish and debris located on eastern portions of the subject property be removed and properly disposed. Based upon site observations, it is apparent that in addition to the surficial debris, fill material may be present in the subsurface on eastern portions of the subject property. Brown Family Holdings, LLC should be aware of the potential presence of fill material on the subject property. Should non-inert fill material be identified on site, the potential exists that removal of this material would be required.

No indications of pits, ponds or lagoons were observed on the date of the site inspections. As indicated, the Kalamazoo County Zantman drain is present along the eastern property boundary. No indication of exterior chemical storage, underground storage tanks, stained ground surface, distressed vegetation or controlled substances were observed on the date of the site inspection.

Chemical Storage and Waste Disposal

No significant chemical storage or waste disposal was identified in association with the subject property at the time of the site inspection. Goodwill has most recently utilized the site for the warehousing of clothing, shoes and books. Historic Goodwill operations involved limited metal machining and dry cleaning activities. Historic site plans detail the former presence of a solvent storage building in the parking area located south of the existing structure. As detailed, soil and groundwater on the subject property has been impacted as a result of former staging of gasoline in a UST and the use of tetrachloroethene for dry cleaning.

Beckan Industries, Inc. operations in the future will involve the limited use of select chemical products in support of precision machining activities. Materials to be utilized in the future include cutting fluids, way oils and lubricants. Envirologic has reviewed Material Safety Data Sheets (MSDS) provided by Beckan for products to be utilized in the future. No gasoline or volatile halocarbon use will take place on the subject property in the future. Liquid chemicals to be utilized in the future will be stored in containers ranging in size from five gallons to 35 gallons. All containers will be staged within the subject building on racks providing secondary containment. Similarly, solid metal inventory consisting of steel, stainless steel, aluminum alloys, zinc and bronze will also be staged within the building. Scrap metal and shaving generated during machining activities will be stored within a container staged inside the building prior to removal from the subject property for recycling. The exterior portions of the subject property will

not be utilized by Beckan for the handling, staging or processing of chemicals in the future.

Utilities

The subject building is currently serviced by the following utilities: municipal sanitary sewer, water and storm water through the City of Kalamazoo; and natural gas and electric service provided by Consumers Energy. A sanitary sewer line is present on the south side of the subject building. Natural gas service is present on the north side of the subject building. A Kalamazoo County drain, the Zantman drain is present on the east side of the site, near the eastern property boundary. No record of the current or historic presence of private water supply wells or septic systems in association with the subject property was on file with the Kalamazoo County Health Department. A water tower is present on the eastern portion of the subject property. Fire Chief Farr reports that the water tower was historically present as part of the fire suppression system for the subject property. Chief Farr reports that the water tower is no longer utilized. Although it does not represent a concern for environmental impact, Envirologic recommends that the water tower be properly dismantled and removed from the subject property.

Although not indicated in Health Department records, site plans of the subject property provided by Goodwill indicate the former presence of two septic systems in association with the site. The septic systems were located beneath the asphalt parking lot on the south side of the subject property. Site plan information provided by DeLisle & Associates, Inc. indicates the presence of two holding tanks and two leach fields associated with the septic system. The site plan indicates that a floor drain in the former dry cleaning room of the subject building discharged to the septic system. Kalamazoo Township Assessor information indicates that the subject property was connected to municipal sanitary sewer in November of 1995. Goodwill and DeLisle report that the septic system was properly abandoned subsequent to completion of the municipal sanitary sewer connection.

Sampling activities have been conducted by both Fleis & Vandenbrink and DeLisle in association with the septic system. Perchloroethene and the dehalogenation compounds trichloroethene, cis-1,2,-dichloroethene, and vinyl chloride have been identified in groundwater in excess of the Residential Drinking Water criteria in association with the former septic system leach fields. As indicated, the use of the septic system ceased subsequent to connection of the existing municipal sanitary sewer connection for the

subject building. The floor drain formerly present in the dry cleaning room has been abandoned. There is no potential for future discharge to the abandoned septic system.

A culvert drain and Zantman County drain are present on eastern portions of the subject property. Fleis & Vandenbrink collected a sediment sample from the drain outfall and from within Zantman drain. The samples were analyzed for PCBs in order to investigate the potential for impact. No PCBs were identified above the method detection limit in the sediment samples. The analytical results appear to indicate that the subject property has not been impacted by the presence of the culvert drain or the Zantman County drain.

Although documentation was not available through the Kalamazoo County Health Department, based upon information provided by the Client it is the understanding of Envirologic that all historic septic system structures have been properly abandoned. Any additional historic subsurface utility features potentially identified in the future should also be properly abandoned.

Underground Storage Tanks and Above Ground Storage Tanks

The subject property is identified on the MDEQ Underground Storage Tank (UST) database (Site ID # 00003454) and Leaking Underground Storage Tank (LUST) database. A 5,000-gallon tank containing gasoline was installed near the northeast corner of the subject building on May 7, 1959. The UST was installed and operated by Goodwill Industries of SW Michigan for fueling vehicles. MDEQ file information indicates that Goodwill ceased use of the tank in 1983 and A.P.E.C. Ltd. of Mattawan removed the tank from the subject property in April of 1987. No documentation regarding specific UST removal activities is on file with the MDEQ.

Fleis & Vandenbrink initiated site characterization activities on the subject property at the request of Goodwill in June of 2007. Three soil borings were initially installed in the former UST area at that time. A release from the UST was reported to the MDEQ on July 19, 2007 (Release # C-0148-07). The MDEQ listing of the subject property as an “open” LUST site has been identified as a Recognized Environmental Condition. The release was reported by Fles & Vandenbrink due to stained soils and petroleum odors encountered in the former pump island location. A total of nine soil borings have been installed northeast of the subject building by Fleis & Vandenbrink to investigate the former gasoline UST vault and dispenser areas. A summary of the initial UST release

response activities is detailed in a Hydrogoelogic Investigation completed by Fleis & Vandenbrink in May of 2008 and is available for review through the MDEQ.

Identification of petroleum impact to soil associated with the former gasoline UST has been limited to ethylbenzene, 1,2,4-TMB, 1,3,5-TMB, xylenes and naphthalene at one location in shallow soil beneath the former dispenser (SB-3). The reported concentration of naphthalene and ethylbenzene exceed the Groundwater-Surface Water Interface Protection (GSIP) criteria. The concentrations of TMBs and xylenes exceed the GSIP and Drinking Water criteria. Concrete cover remains in place over the former dispenser location (SB-3). It should be noted that tetrachloroethene was identified in soil in the former UST vault in excess of the Residential Drinking Water Protection criterion.

In addition to temporary groundwater samples, four permanent groundwater monitoring wells have been installed northeast of the subject building in order to characterize groundwater conditions relative to the gasoline UST release. The initial groundwater analytical results from 2007 indicated the presence of 1,2,4-TMB, naphthalene and ethylbenzene at concentrations in excess of the Ground-Surface Water Interface (GSI) criteria. The concentration of lead from a temporary groundwater sample down gradient of the former UST dispenser exceeded the Residential/Industrial Drinking Water criterion. The concentration of lead at this location (18 ug/L) also exceeded a site specific GSI criterion of 14 ug/L calculated by Fleis & Vandenbrink.

Fleis & Vandenbrink have continued to conduct UST release response activities on behalf of Goodwill. Response activities have consisted of monitoring groundwater conditions for natural attenuation within four monitoring wells (MW-1 through MW-4). Envirologic obtained all available MDEQ file information pertaining to response activities (Appendix F). The most recent data available in support of this Phase I ESA was a Quarterly Groundwater Sampling Report dated January 23, 2009. No contaminants of concern were identified above the method detection limit in the groundwater samples.

The completed site characterization activities indicate that impact to the subject property associated with the former gasoline UST is limited to soils and groundwater in the immediate vicinity of the UST vault and dispenser island. The most recent analytical results did not identify petroleum contaminants in groundwater. Mr. Eric Walters of Fleis & Vandenbrink has indicated that they intend to submit a Closure Report to the MDEQ in relation to the Part 213 gasoline UST release within calendar year 2009. The reported

intent is to pursue an unrestricted Residential "closure" based upon the lack of indications of petroleum impact to groundwater in MW-1 through MW-4. Nevertheless, based upon the available data, the potential exists that site use restrictions may be necessary to achieve MDEQ "closure". Site use restrictions may involve the maintenance of impervious cover over the former UST vault and dispenser locations, as well as a prohibition on the development of groundwater on the subject property as a potable water supply.

Envirologic recommends that Brown Family Holdings, LLC discuss with Goodwill proposed UST release response activities. Brown Family Holdings, LLC should be aware of any on-going access and potential site use restrictions that Goodwill may want to place on the subject property in support of UST release "closure." Envirologic recommends that impervious cover be placed over the area of bare ground associated with the former UST vault.

No indications of the presence of additional underground storage tanks (vent pipes, fill ports, pumps) were observed during the Phase I ESA site inspections. MDEQ file information did not indicate the potential presence of additional USTs in association with the subject property. Mr. John Dillworth of Goodwill reports no knowledge of additional USTs in association with the subject property. However, Kalamazoo Township Fire Chief Farr recalled that a heating oil UST may have been associated with the subject property – in addition to the identified gasoline UST. No specific record of an additional UST exists in the Township Fire Department files and the concern regarding a potential additional tank was based solely upon the recollection of Chief Farr that such a tank may have historically been utilized.

In order to investigate the potential for an additional UST to remain on the subject property, Envirologic oversaw the completion of a ground penetrating radar (GPR) geophysical survey of portions of the subject property. The survey included a 30-foot wide area around the perimeter of the subject building, a 100-foot x 100-foot area south of the building associated with the former "solvent storage shed", and an 80-foot x 80-foot area in the northeast corner of the building. Particular attention was focused on the northeast corner of the building based upon the historic use of a boiler room in the northeast corner of the building. It has been presumed that the potential presence of a heating oil UST is most likely in close proximity to the former boiler room. No indications of the presence of additional UST system structures were identified as a result

of the GPR survey. Refer to the Phase II ESA section of this report below and Appendix H for further details on the GPR survey.

Based upon available documentation and the completed GPR survey, the potential for an additional UST to be associated with the subject property appears to be low.

Polychlorinated Biphenyls (PCBs)

Envirologic evaluated the potential for PCBs-containing materials associated only with electrical and hydraulic equipment. Three pole-mounted transformers were observed along the western property boundary, along N. Pitcher St. No labels indicating the PCBs status of the transformers were evident. No evidence of a release, such as staining or distressed vegetation, was noted in association with the transformers. The transformers are presumed to be owned by Consumers Energy. Consumers Energy would retain remedial liability for any impact associated with a potential leak or failure from the transformers.

ASSESSMENT OF IDENTIFIED SITES OF CONCERN

Environmental Radius Report

Environmental Data Resources, Inc. (EDR) generated an "EDR Radius Map Report" that is provided in Appendix C. The purpose of the radius report is to identify potential and confirmed sources of contamination at or near the subject property. EDR searched and reviewed appropriate state and federal environmental databases within required radii from the subject property, in accordance with ASTM Standard E1527-05 requirements. The following state and federal environmental databases were reviewed:

- *Federal NPL—National Priority List,* high-ranking contaminated sites targeted for federal clean-up action
- *Federal CERCLIS—Comprehensive Environmental Response, Compensation, and Liability Information System,* potential uncontrolled hazardous waste sites
- *Federal NFRAP*—sites with a completed assessment under CERCLA, and for which EPA has determined that no further steps will be taken
- *Federal RCRA TSD—Resource Conservation and Recovery Act,* permitted hazardous waste treatment, storage and disposal facilities
- *Federal RCRA COR*—hazardous waste sites undergoing corrective action under RCRA
- *Federal RCRA GEN*—generators of hazardous waste
- *Federal ERNS—CERCLA Emergency Response Notification System,* sites where EPA has conducted emergency response actions for hazardous substance releases
- *State Sites—Michigan State Priorities List, Part 201 Sites,* sites subject to reporting and remediation under Michigan's Part 201 of Act 451
- *State SWL—Michigan Solid Waste Facilities,* active and inactive solid waste facilities
- *State LUST—Leaking Underground Storage Tank,* sites with confirmed releases from underground storage tank systems
- *State UST/AST—Underground/Aboveground Storage Tank,* sites with registered underground or above storage tanks
- *State BEA—Michigan Baseline Environmental Assessment Sites,* contaminated sites that have performed a Baseline Environmental Assessment
- And other reasonably ascertainable publicly available databases. Refer to Appendix C for a full list of all databases.

The majority of these sites were identified through the report as former (closed) sites of contamination or as sites that are listed simply due to the presence of regulated substances or wastes (e.g., UST site, RCRA Generator sites, etc.).

Envirologic reviewed MDEQ file information for the following sites identified in the EDR database:

• Goodwill Industries of SW Michigan (Subject Property) 2700 N. Pitcher St. Kalamazoo, MI	UST, LUST
• Mall City Containers, Inc. (Adjacent North) 2710 N. Pitcher St. Kalamazoo, MI	FINDS DEL SHWS UST, LUST
• 521 E. Mosel St. (1/8 Mile WSW) Kalamazoo, MI	BEA
• Former Eaton Corporation (1/4 Mile WSW) 222 E. Mosel St. Kalamazoo, MI	Brownfield UST, LUST
• Haviland Products (1/4 Mile W) 2722 N. Burdick St. Kalamazoo, MI	AST, SSTS RCRA-CESQG UST, LUST
• Kalamazoo Oil Company (1/4 Mile WSW) 2601 N. Burdick St. Kalamazoo, MI	FINDS RCRA-CESQG AST, UST, LUST
• Borroughs Corporation (1/4 Mile WNW) 3002 N. Burdick St. Kalamazoo, MI	FINDS, SHWS RCRA-SQG CERC-NFRAP

Goodwill Industries of SW Michigan

As detailed above, the subject property is identified on the Underground Storage Tank (UST) and Leaking Underground Storage Tank (LUST) databases, based upon a Part 213 release reported in 2007 in association with a former gasoline UST. The "open" status of the LUST listing has been identified as a Recognized Environmental Condition. Release response activities have been conducted by Fleis & Vandenbrink on behalf of Goodwill. The most recent available analytical data indicates that soil and groundwater impact is limited to the immediate vicinity of the former UST vault and dispenser locations near

the northeast corner of the subject building. MDEQ "closure" for the release may involve the monitoring of natural attenuation, along with the placement of on-site use restrictions prohibiting the development of groundwater. An additional potential use restriction may involve the maintenance of impervious cover over petroleum impacted soils. Brown Family Holdings, LLC should understand any potential land use restrictions Goodwill intends to propose for the subject property in support of "closure".

Although not identified in the database report, the subject property is also a Part 201 site of known contamination based upon the volatile halocarbon impact identified on site. Response activities are being conducted by DeLisle on behalf of Goodwill. Similar, to the UST release, Brown Family Holdings, LLC should understand any potential land use restrictions Goodwill intends to place on the subject property to address the volatile halocarbon contamination.

Mall City Containers, Inc.

Mall City occupies the adjacent parcel to the north. The site is identified as a non-generating handler of hazardous waste. No violations appear in the EDR report relative to their RCRA-Nongen status. The property is identified as a LUST site, based upon a release reported in March of 1990. The EDR report indicates that a 10,000-gallon diesel UST was removed from the subject property in November of 1979. However, MDEQ file information indicates that a gasoline UST and waste oil UST were also historically associated with the Mall City property. American Hydrogeology Corporation (AHC) conducted UST release response activities on behalf of Mall City. MDEQ file information includes a Closure Report from AHC date March 22, 1999. Results of the investigation identified soil impacted with BTEX, PNAs and lead. Groundwater impact included benzene and volatile halocarbons. The volatile halocarbon impact was attributed by AHC to the off-site Borroughs property. Benzene impact, attributed to the on-site UST release, was limited to the vicinity of the former UST vault. Subsequent to the excavation of impacted soils from the UST vault area, contaminant levels were reduced to below Residential cleanup criteria. The site received unrestricted Residential closure for the UST release on September 23, 1999. Based upon the unrestricted Residential closure, the appearance of the Mall City site on the UST and LUST databases does not appear to represent a potential for impact to the subject property.

The site also appears as de-listed on the State Hazardous Waste Site (SHWS) database. The SHWS listing appears to be associated with the identification of benzo(a)pyrene in

soil on the subject property. The presence of benzo(a)pyrene in soil was not attributed to the former presence of underground storage tanks on the subject property. No groundwater impact was identified in association with the benzo(a)pyrene contamination. Subsequent to the excavation and off-site disposal of 100yd^3 of impacted soil, Residential closure relative to the benzo(a)pyrene was provided on March 7, 2002.

Based upon the available documentation, the potential for the Mall City site to impact the subject property appears to be low. However, groundwater analytical data generated on the Mall City site indicated volatile halocarbon impact that AHC has attributed to the off-site Borroughs property.

521 E. Mosel St.

MDEQ file information indicates that 521 E. Mosel was occupied by Kalamazoo Converting. A Category N Baseline Environmental Assessment (BEA) was completed by Keiser & Associates on behalf of Burdick St. Properties, LLC on May 7, 2004. The site was identified as a "facility" based upon the presence of arsenic and selenium in soil around a storage shed. The metals were attributed to the presence of historic fill material and drain dredge spoils. Based upon the fact that the 521 E. Mosel St. site is located southwest of the subject property, the site does not have the potential to impact the subject property due to the south/southeasterly groundwater flow direction identified in the region.

Former Eaton Corporation

The former Eaton site has had 16 USTs removed from the property. The tanks range in capacity from 1,000 to 10,000 gallons. The tanks formerly contained: diesel, fuel oil, hydraulic oil, cutting oil, quench oil and rust inhibitor. Five separate releases remain "open" in association with removal of the tanks in October of 2001 and July of 2002. A hydrogeologic investigation completed by Groundwater Solutions, Inc. on March 17, 2004 indicates an easterly/southeasterly groundwater flow direction on the former Eaton site. It should be noted that Groundwater Solutions, Inc. attributed cyanide and volatile halocarbon impact in groundwater identified on the Eaton property to an off-site source. Based upon the fact that the former Eaton site is located south of the subject property (hydraulically down gradient), the former Eaton site does not appear to have the potential to impact the subject property.

Haviland Products

The Haviland site has eight 8,000-gallon aboveground storage tanks on site containing flammable liquids. No concerns regarding a potential release in association with the ASTs have been identified. The Haviland site is also identified as a conditionally exempt small quantity generator (CESQG) of hazardous waste. Three violations in association with the CESQG status of the site were reported in September of 1996. The violations pertain to pre-transport and manifest activities. The violations do not indicate a release of hazardous substances has occurred. The CESQG status of the Haviland site does not represent a potential for impact to the subject property. The Haviland site appears in the SSTS database for the years 1990, 1991 and 1992 due to the re-packaging of Liquichlor bleach utilized as a disinfectant. The SSTS listing for the Haviland site does not represent a potential for environmental impact to the subject property. The Haviland site appears in the UST database based upon the former presence of a 10,000-gallon diesel tank that was installed on the site in 1982 and removed in 1990. A release was reported at the time of UST removal in 1990. Wilkins & Wheaton conducted release response activities on behalf of Haviland. Remedial activities involved the excavation and off-site disposal of 300 yds^3 of impacted soil and approximately 1,000 gallons of water encountered within the UST vault. Subsequent to completion of remedial activities, no indications of groundwater impact were identified and the Haviland site received MDEQ "closure" for the UST release on May 31, 1991. Based upon the lack of groundwater impact, the appearance of the Haviland site on the LUST database does not represent a potential for impact to the subject property.

Kalamazoo Oil Company

The Kalamazoo Oil Company appears as a conditionally exempt small quantity generator of hazardous waste. No violations have been reported in association with the RCRA-CESQG status of the site and thus this database listing does not represent a concern at this time. Five aboveground storage tanks (ASTs) are present on the property. The tanks contain flammable liquids and vary in size from 10,500 gallons to 500,000 gallons. Six underground storage tanks containing gasoline, diesel and kerosene, and ranging in size from 1,000 gallons to 12,000 gallons in size, have been removed from the site. One 15,000-gallon gasoline and one 10,000-gallon diesel tank remain on site. Three separate UST releases from 1990, 1994 and 1996 remain "open" with the MDEQ. Fishbeck, Thompson, Carr & Huber have conducted release response activities on behalf of Kalamazoo Oil. The most recent document available for review is a 4th Quarter Free Product report dated January 9, 2009. The report indicates that free phased petroleum

product is no longer present on site. Approximately 717 yds^3 of impacted soils have been removed from the site. Hydrogeologic investigation activities indicate that groundwater impact does not extend east of N. Burdick St. Based upon the identified extent of groundwater impact, the Kalamazoo Oil site does not have the potential to impact the subject property.

Borroughs Corporation

As detailed above, MDEQ file information indicates that a vinyl chloride groundwater contaminant plume emanating from the Borroughs site has resulted in impact to groundwater on the western portion of the subject property. The most recent MDEQ file information for the Borroughs site is a 4th Quarter 2008 Groundwater Sampling report dated January 5, 2009. The report includes the analytical results from sampling a monitoring well (MW-19d) placed on the western portion of the subject property as part of delineation of the extent of groundwater impact emanating from the Borroughs site. The most recent data indicates the presence of vinyl chloride in groundwater from MW-19d at a concentration in excess of the Industrial Drinking Water criterion. The presence of groundwater impact on western portions of the subject property associated with contamination emanating from the Borroughs site has been identified as a Recognized Environmental Condition. MDEQ documentation indicates that Borroughs intends to pursue a restriction of groundwater use on the Goodwill site in support of "closure." Brown Family Holdings, LLC should be aware any discussions/agreements Goodwill has had with Borroughs regarding future site access for monitoring well sampling and potential site use restrictions that may be proposed in support of MDEQ "closure."

Observations of Adjacent Properties

The subject property is situated within an area of primarily commercial and industrial development. The following operations were identified west of the subject property, on the west side of N. Pitcher St. – Borroughs, Trinity Warehouse Solutions, Total Plastics, Inc. (TPI), Haviland and C&C towing. Mall City Containers is located on the adjacent parcel north of the subject property. Limited private residences, Specialty Adhesives & Coatings and Kalamazoo Septic are located further north. A vacant lot is located south of the subject property. Additional vacant land and Checker Motors Company is located further south, south of Mosel Ave. Two sets of abandoned railroad tracks are present east of the subject property. Vacant land and Panic REV Powersport is located further east of the subject property.

There were no outdoor storage, operations, fueling stations or other environmental concerns observed at the adjacent properties. However, as detailed above, groundwater on western portions of the subject property has been impacted by contamination emanating from the Borroughs site. No concerns relative to the volatilization of contaminants to indoor air have been identified based upon the reported concentrations of volatile halocarbons identified in groundwater on western portions of the subject property. The available data would appear to indicate that potential on-site use restrictions that may be put in place to address on-site contamination would also address potential future "due care" obligations associated with contamination emanating onto the property.

PHASE II ENVIRONMENTAL SITE ASSESSMENT

In order to further characterize site conditions in support of due diligence and "due care" considerations, Envirologic completed a Phase II ESA of the subject property.

FIELD ACTIVITIES

Envirologic performed the field activities associated with the Phase II ESA on multiple occasions: a ground penetrating radar (GPR) geophysical survey was completed on March 2, 2009; the installation of 11 Geoprobe™ soil borings for the collection of soil and groundwater samples was completed on March 3, 2009; the collection of interior sub-slab soil gas samples was completed on two occasions: March 6 and March 11, 2009. Refer to Figure 2, Appendix A for a site plan detailing boring and sampling locations.

Geoprobe™ boring depths ranged from four to 12 feet bgl. Soils encountered during boring installation consisted of lenses of poorly-sorted, fine- to coarse-grained, gravelly sand inter-bedded with a brown clayey sand of low plasticity with trace amounts of gravel. Groundwater was encountered within a poorly-sorted, gravelly sand lense approximately four feet bgl on the east side of the property to 10 feet bgl on the west side of the property.

Envirologic conducted the Phase II ESA in accordance with a Sampling Plan and Quality Assurance Project Plan approved by the U.S. EPA. Soil sampling for volatile organic compounds was conducted using Method 5035 protocols. All sampling equipment was cleaned with a phosphate-free detergent wash, followed by a fresh water rinse and a deionized water rinse prior to and between each boring in order to prevent cross-contamination. All boring locations were backfilled with bentonite and native soil. Sub-slab soil gas sampling was conducted utilizing MDEQ guidance presented in RRD Operational Memorandum No. 4 – Attachment 4. A summary of the field activities is provided below.

Ground Penetrating Radar (GPR) Geophysical Survey

As indicated, Fire Chief Farr indicated that an additional underground storage tank (UST), beyond the gasoline tank removed from the site, may have historically been associated with the subject property. Based upon the uncertainty regarding the potential for additional UST system structures to be associated with the subject property, Envirologic oversaw the completion of ground penetrating radar (GPR) geophysical survey of a portion of the subject property. The survey was completed by Diamond

Subsurface Imaging. The GPR survey report is presented as Appendix H. The survey area consisted of the following: a 30-foot wide area around the entire perimeter of the subject building; a 100-feet x 100-foot area south of the subject building associated with the former solvent storage building; and an 80-foot x 80-foot area in the northeast corner of the subject building.

No indications of the presence of UST system structures were identified during the GPR survey. Further, no indications of areas of disturbed subsurface soils consistent with a potential former UST vault were identified as a result of the GPR survey.

Shipping/Receiving Area – West

Borings GSB-1, GSB-2, GSB-3, GSB-4 and GSB-5 were installed at exterior locations on the west side of the subject building. The boring locations were selected in order to characterize site conditions within the area from which future shipping/receiving activities will be conducted by Beckan Industries, Inc. Specific boring locations were selected based upon the topography across this portion of the property, as well as the presence of cracking/deterioration of the asphalt cover. The selected borings locations represent areas that could potentially be impacted in the event of a surficial release if exterior material handling practices were ever to be conducted on site.

Borings GSB-1, GSB-2, GSB-4 and GSB-5 were installed to a depth of four feet bgl. No indications of contamination (visual, olfactory, PID responses) were noted during boring installation. Fill material including apparent brick fragments was encountered beneath the asphalt/topsoil in borings GSB-3 and GSB-4. The fill material persisted in the borings to a depth of approximately three feet bgl. Based upon the lack of indications of contamination, a shallow soil sample was collected 0.5 feet bgl from each boring. The boring depth was selected in order to characterize shallow soils most likely to be impacted by a potential future surficial release.

Boring GSB-3 was installed to a depth of 12 feet bgl. The boring location was selected based upon the presence of a low-lying area in the asphalt adjacent to a storm drain. A shallow soil sample was collected 0.5 feet bgl from boring GSB-3. In addition to the shallow soil sample, a groundwater sample was also collected from boring GSB-3. The groundwater sample was collected from a temporary screen point sampler from the interval of seven to 11 feet bgl set to straddle the water table. No indications of impact (visual, olfactory, PID responses) were noted during groundwater sample collection.

Boring GSB-6 was installed within the southernmost shipping/receiving bay located on the east side of the building. Beckan Industries, Inc. reports that this bay will be utilized for material handling (i.e. loading/unloading) activities in the future. The specific location of boring GSB-6 within the bay was based upon the slope of the bay floor along with the presence of minor pitting/cracking of the concrete floor. Boring GSB-6 was installed to a depth of four feet bgl. No indications of impact (visual, olfactory, PID responses) were noted during boring installation. Based upon the lack of indications of impact, a shallow soil sample was collected 0.5 ft bgl from boring GSB-6.

Shipping/Receiving Area – East

Borings GSB-7, GSB-8, GSB-9 and GSB-11 were installed at exterior locations on the east side of the subject building. Similar to the west side of the building, the boring locations were selected in order to characterize shallow soil conditions at topographic low areas that could potentially be impacted as a result of a potential surficial release. The location of boring GSB-9 also represents the former location of the gasoline UST removed from the subject property. Boring GSB-7 was installed to a depth of eight feet bgl, while borings GSB-8, GSB-9 and GSB-11 were installed to a depth of four feet bgl. No indications of impact (visual, olfactory, PID responses) were noted during boring installation. A shallow soil sample was collected 0.5 feet bgl from each boring. In addition to the soil samples, a groundwater sample was collected from boring GSB-7. The groundwater sample was collected from a temporary screen point sampler from the interval of three to seven feet bgl set to straddle the water table. No indications of impact (visual, olfactory, PID responses) were noted during sample collection.

Additional Groundwater Characterization

Boring GSB-10 was installed on the north side of the building, near the northeast corner of the structure. The boring location was selected based upon the former presence of a boiler room in the northeast corner of the building. Historic data sources indicated the potential for an additional UST to have historically been associated with the subject property. Although no indications of a potential UST were identified during the GPR survey; the former presence of the boiler room in this portion of the building was identified as an area of potential concern. In addition, the boring location also represented an area not assessed during previous site investigations. The boring was installed to a depth of approximately 10 feet bgl. The boring was not extended beyond this depth due to difficult advancement of the Geoprobe™ macro-core tooling attributed to tight clay soils. No indications of contamination (visual, olfactory, PID responses)

were noted during boring installation. Groundwater was encountered approximately eight feet bgl. A groundwater sample was collected from a temporary screen point sampler from the interval of six to 10 feet bgl set to straddle the water table.

Sub-Slab Soil Gas Investigation

As indicated, the reported concentrations of tetrachloroethene at select locations beneath the subject building indicated a potential for unacceptable health exposures associated with volatilization to indoor air. The sub-slab sample point installation and soil gas sample collection was completed utilizing MDEQ RRD Operational Memorandum No. 4 – Attachment 4 guidance. A total of 18 sample points were installed within interior portions of the building. The sample locations were selected based upon the previously generated analytical results for soil samples collected beneath the subject building. The sub-slab sample points were generally focused around two areas on the south side of the building historically utilized for dry cleaning operations. Additional sub-slab sample points were installed beyond the former dry cleaning areas in order to further characterize sub-slab soil gas conditions. The sample points were constructed with Teflon tubing, a stainless steel compression fitting and completed with a brass plug and sealed with hydraulic cement. The sample points remain in-place and available for future evaluation of site conditions. All installed points were allowed to set for a minimum of 24 hours prior to sampling. Prior to sampling, the points were purged of an equivalent of three volumes of air utilizing an air pump with a flow rate set to not exceed 200 ml/minute. The samples were collected utilizing six-liter TO-15 suma canisters with a critical orifice set to a flow rate of 200 ml/minute. As a tracer gas; liquid isopropyl alcohol was wetted onto paper towels and placed at fitting locations. Individual sample collection required approximately 30 minutes.

LABORATORY ANALYTICAL RESULTS

In accordance with modifications to the Sampling Plan and Quality Assurance Project Plan, the soil, groundwater, and sub-slab soil gas samples were submitted to Fibertec Laboratories, Inc. of Grand Rapids, Michigan for laboratory analysis. The soil and groundwater sample containers were placed into a chilled cooler for transportation to the laboratory using standard chain-of-custody procedures.

Based upon the previously identified contaminants of concern associated with the subject property along with a review of Material Safety Data Sheets (MSDS) for materials to be utilized by Beckan Industries, Inc. in the future the soil and groundwater samples were analyzed for the following parameters: a broad range of volatile organic compounds (VOCs 8260+), polynuclear aromatic hydrocarbons (PNAs), Michigan 10 metals and aluminum. The sub-slab soil gas samples were analyzed for a broad range of VOCs (TO-15 scan). The laboratory analytical reports are presented as Appendix I. The soil analytical results are summarized in Table 1, along with a comparison to relevant Residential Cleanup criteria. The groundwater analytical results are presented in Table 2, along with a comparison to Residential Cleanup criteria. Based upon the lack of historic plating activities associated with the subject property, the total chromium results for the soil samples were compared to the cleanup criteria for trivalent chromium. The sub-slab soil gas sample results are presented in Table 3 along with a comparison of Residential and Industrial Acceptable Soil Gas Screening Concentrations.

In addition to the samples detailed above, Envirologic collected QA/QC samples in accordance with the Sampling Plan. Refer to the Data Validation Report (Appendix I) for details on QA/QC sampling and results.

Table 1: Summary of Soil Analytical Results & Comparison to Residential Cleanup Criteria

Volatile Organic Compounds																		
Compound	Statewide Default Background Levels	Residential Drinking Water Protection Criteria	Groundwater Surface Water Interface Protection Criteria	Groundwater Contact Protection Criteria	Soil Vol. to Indoor Air Inhalation Criteria	Infinite Source Volatile Soil Inhalation Criteria	Particulate Soil Inhalation Criteria	Residential Direct Contact Criteria	GSB-1 @ 0.5'	GSB-2 @ 0.5'	GSB-3 @ 0.5'	GSB-4 @ 0.5'	GSB-5 @ 0.5'	GSB-6 @ 0.5'	GSB-7 @ 0.5'	GSB-8 @ 0.5'	GSB-9 @ 0.5'	GSB-11 @ 0.5'
Benzene	NA	100	4,000	220,000	1,600	13,000	3.8E+8	180,000	<MDL	<MDL	<MDL	<MDL	<MDL	<MDL	<MDL	<MDL	<MDL	<MDL
Toluene	NA	16,000	2,800	250,000	250,000	2.8E+6	2.7E+10	250,000	<MDL	<MDL	<MDL	<MDL	<MDL	<MDL	<MDL	<MDL	<MDL	<MDL
Ethylbenzene	NA	1,500	360	140,000	87,000	720,000	1.0E+10	140,000	<MDL	<MDL	<MDL	<MDL	<MDL	<MDL	<MDL	<MDL	<MDL	<MDL
Xylenes	NA	5,600	700	150,000	150,000	4.6E+7	2.9E+11	150,000	<MDL	<MDL	<MDL	<MDL	<MDL	<MDL	<MDL	<MDL	<MDL	<MDL
Tetrachloroethene	NA	100	900	88,000	11,000	180,000	5.4E+9	88,000	<MDL	<MDL	<MDL	<MDL	<MDL	<MDL	<MDL	<MDL	<MDL	<MDL
Trichloroethene	NA	100	4,000	440,000	7,100	78,000	1.8E+9	500,000	<MDL	<MDL	<MDL	<MDL	<MDL	<MDL	<MDL	<MDL	<MDL	<MDL
1,2,4-Trimethylbenzene	NA	2,100	570	110,000	110,000	2.1E+7	8.2E+10	110,000	<MDL	<MDL	<MDL	<MDL	<MDL	<MDL	<MDL	<MDL	<MDL	<MDL
1,3,5-Trimethylbenzene	NA	1,800	1,100	94,000	94,000	1.6E+7	8.2E+10	94,000	<MDL	<MDL	<MDL	<MDL	<MDL	<MDL	<MDL	<MDL	<MDL	<MDL
Vinyl Chloride	NA	40	300	20,000	270	4,200	3.5E+8	3,800	<MDL*	<MDL*	<MDL*	<MDL*	<MDL*	<MDL*	<MDL*	<MDL*	<MDL*	<MDL*
All Other VOCs	NA	NA	NA	NA	NA	NA	NA	NA	<MDL	<MDL	<MDL	<MDL	<MDL	<MDL	<MDL	<MDL	<MDL	<MDL

Notes:
1. All sample results in µg/kg (parts per billion)
2. 1 = Reported concentration per Method 8260
2. Result **bolded** where detected, **bolded** and shaded where exceeding applicable cleanup criteria
3. <MDL = Less Than Method Detection Limit, NA = Not Applicable, ND = Not Detected, NLL = Not Likely to Leach, NLV = Not Likely to Volatilize, ID = Insufficient Data to Develop Criterion
4. * = The Method Detection Limit (MDL) for Vinyl Chloride exceeds the Residential Drinking Water Protection criterion
5 Cleanup Criteria from Michigan OP Memo RRD-1, Attachment 1, January 23, 2006

Table 1: Summary of Soil Analytical Results & Comparison to Residential Cleanup Criteria (continued)

Polynuclear Aromatic Hydrocarbons																		
Compound	Statewide Default Background Levels	Residential Drinking Water Protection Criteria	Groundwater Surface Water Interface Protection Criteria	Groundwater Contact Protection Criteria	Soil Vol. to Indoor Air Inhalation Criteria	Infinite Source Volatile Soil Inhalation Criteria	Particulate Soil Inhalation Criteria	Residential Direct Contact Criteria	GSB-1 @ 0.5'	GSB-2 @ 0.5'	GSB-3 @ 0.5'	GSB-4 @ 0.5'	GSB-5 @ 0.5'	GSB-6 @ 0.5'	GSB-7 @ 0.5'	GSB-8 @ 0.5'	GSB-9 @ 0.5'	GSB-11 @ 0.5'
Acenaphthene	NA	300,000	4,400	970,000	1.9E+8	8.1E+7	1.4E+10	4.1E+7	<MDL	<MDL	<MDL	**7,200**	<MDL	<MDL	<MDL	<MDL	<MDL	<MDL
Acenaphthylene	NA	5,900	ID	440,000	1.6E+6	2.2E+6	2.3E+9	1.3E+6	<MDL	<MDL	<MDL	<MDL	<MDL	<MDL	<MDL	<MDL	<MDL	<MDL
Anthracene	NA	41,000	ID	41,000	1.0E+9	1.4E+9	6.7E+10	2.3E+8	<MDL	<MDL	<MDL	**35,000**	<MDL	<MDL	**3,600**	<MDL	<MDL	<MDL
Benzo(a)anthracene	NA	NLL	NLL	NLL	NLV	NLV	ID	20,000	<MDL	<MDL	<MDL	**93,000**	<MDL	<MDL	**540**	<MDL	**450**	<MDL
Benzo(a)pyrene	NA	NLL	NLL	NLL	NLV	NLV	1.5E+6	2,000	<MDL	<MDL	<MDL	**100,000**	<MDL	<MDL	**380**	<MDL	**430**	<MDL
Benzo (b) fluoranthene	NA	NLL	NLL	NLL	ID	ID	ID	20,000	<MDL	<MDL	<MDL	**160,000**	<MDL	<MDL	**670**	<MDL	**720**	<MDL
Benzo(ghi)perylene	NA	NLL	NLL	NLL	NLV	NLV	8.0E+8	2.5E+6	<MDL	<MDL	<MDL	**82,000**	<MDL	<MDL	<MDL	<MDL	<MDL	<MDL
Benzo(k)fluoranthene	NA	NLL	NLL	NLL	NLV	NLV	ID	200,000	<MDL	<MDL	<MDL	**44,000**	<MDL	<MDL	<MDL	<MDL	<MDL	<MDL
Chrysene	NA	NLL	NLL	NLL	ID	ID	ID	2.0E+6	<MDL	<MDL	<MDL	**110,000**	<MDL	<MDL	**860**	<MDL	**540**	<MDL
Dibenzo(a,h)anthracene	NA	NLL	NLL	NLL	ID	ID	ID	2,000	<MDL	<MDL	<MDL	**14,000**	<MDL	<MDL	<MDL	<MDL	<MDL	<MDL
Fluoranthene	NA	730,000	5,500	730,000	1.0E+9 (D)	7.4E+8	9.3E+9	4.6E+7	<MDL	<MDL	<MDL	**220,000**	<MDL	<MDL	**2,000**	<MDL	**1,100**	<MDL
Fluorene	NA	390,000	5,300	890,000	5.8E+8	1.3E+8	9.3E+9	2.7E+7	<MDL	<MDL	<MDL	**13,000**	<MDL	<MDL	<MDL	<MDL	<MDL	<MDL
Indeno(1,2,3-cd)pyrene	NA	NLL	NLL	NLL	NLV	NLV	ID	20,000	<MDL	<MDL	<MDL	**100,000**	<MDL	<MDL	<MDL	<MDL	<MDL	<MDL
Naphthalene	NA	35,000	870	2.1E+6	250,000	300,000	2.0E+8	1.6E+7	<MDL	<MDL	<MDL	<MDL	<MDL	<MDL	<MDL	<MDL	<MDL	<MDL
2-Methylnapthalene	NA	57,000	ID	5.5E+6	ID	ID	ID	8.1E+6	<MDL	<MDL	<MDL	<MDL	<MDL	<MDL	<MDL	<MDL	<MDL	<MDL
Phenanthrene	NA	56,000	5,300	1.1E+6	2.8E+6	160,000	6.7E+6	1.6E+6	<MDL	<MDL	<MDL	**130,000**	<MDL	<MDL	**1,600**	<MDL	**540**	<MDL
Pyrene	NA	480,000	ID	480,000	1.0E+9 (D)	6.5E+8	6.7E+9	2.9E+7	<MDL	<MDL	<MDL	**180,000**	<MDL	<MDL	**1,300**	<MDL	**930**	<MDL

Notes:
1. All sample results in µg/kg (parts per billion)
2. Result **bolded** where detected, **bolded** and shaded where exceeding applicable cleanup criteria
3. <MDL = Less Than Method Detection Limit, NA = Not Applicable, NLL = Not Likely to Leach, NLV = Not Likely to Volatilize, ID = Insufficient Data to Develop Criterion
4. D = Calculated criterion exceeds 100 percent, hence it is reduced to 100 percent or 1.0E+9 parts per billion (ppb)
5. Cleanup Criteria from Michigan OP Memo RRD-1, Attachment 1, January 23, 2006

Table 1: Summary of Soil Analytical Results & Comparison to Residential Cleanup Criteria (continued)

Metals																		
Compound	Statewide Default Background Levels	Residential Drinking Water Protection Criteria	Groundwater Surface Water Interface Protection Criteria	Groundwater Contact Protection Criteria	Soil Vol. to Indoor Air Inhalation Criteria	Infinite Source Volatile Soil Inhalation Criteria	Particulate Soil Inhalation Criteria	Residential Direct Contact Criteria	GSB-1 @ 0.5'	GSB-2 @ 0.5'	GSB-3 @ 0.5'	GSB-4 @ 0.5'	GSB-5 @ 0.5'	GSB-6 @ 0.5'	GSB-7 @ 0.5'	GSB-8 @ 0.5'	GSB-9 @ 0.5'	GSB-11 @ 0.5'
Aluminum	6.9E+6	1,000	NA	1.0E+9	NLV	NLV	ID	5.0E+7	**4,200,000**	**5,800,000**	**4,400,000**	**2,800,000**	**3,000,000**	**4,900,000**	**4,800,000**	**3,100,000**	**2,800,000**	**5,700,000**
Arsenic	5,800	4,600	70,000	2.0E+6	NLV	NLV	720,000	7,600	**6,000**	**7,800**	**7,100**	**13,000**	**3,700**	**640**	**6,200**	**120,000**	**11,000**	**9,000**
Barium	75,000	1.3E+6	G,X	1.0E+9	NLV	NLV	3.3E+8	3.7E+7	**42,000**	**56,000**	**52,000**	**72,000**	**41,000**	**60,000**	**28,000**	**250,000**	**32,000**	**100,000**
Cadmium	1,200	6,000	G,X	2.3E+8	NLV	NLV	1.7E+6	550,000	**93**	**99**	**150**	**640**	**110**	<MDL	**100**	**870**	**230**	**110**
Chromium	18,000	1.0E+9	G,X	1.0E+9	NLV	NLV	3.3E+8	7.9E+8	**10,000**	**9,300**	**7,200**	**22,000**	**5,800**	**7,700**	**12,000**	**4,800**	**6,900**	**8,000**
Copper	32,000	5.8E+6	G	1.0E+9	NLV	NLV	1.3E+8	2.0E+7	**9,900**	**11,000**	**9,700**	**25,000**	**8,000**	**8,900**	**13,000**	**18,000**	**16,000**	**8,700**
Lead (total)	21,000	700,000	G,X	ID	NLV	NLV	1.0E+8	400,000	**6,900**	**9,500**	**19,000**	**55,000**	**11,000**	**7,600**	**8,200**	**15,000**	**23,000**	**11,000**
Mercury	130	1,700	50	47,000	48,000	52,000	2.0E+7	160,000	<MDL	<MDL	<MDL	<MDL	<MDL	**66**	<MDL	**90**	<MDL	<MDL
Selenium	410	4,000	400	7.8E+7	NLV	NLV	1.3E+8	2.6E+6	<MDL	**320**	**290**	**280**	**280**	<MDL	**240**	**800**	<MDL	**280**
Silver	1,000	4,500	100	2.0E+8	NLV	NLV	6.7E+6	2.5E+6	<MDL	<MDL	<MDL	<MDL	<MDL	<MDL	<MDL	<MDL	<MDL	<MDL
Zinc	47,000	2.4E+6	G	1.0E+9	NLV	NLV	ID	1.7E+8	**21,000**	**24,000**	**26,000**	**140,000**	**30,000**	**18,000**	**35,000**	**62,000**	**65,000**	**42,000**

Notes:
1. All sample results in µg/kg (parts per billion)
2. Result **bolded** where detected, **bolded** and shaded where exceeding applicable cleanup criteria
3. <MDL = Less Than Method Detection Limit, NLV = Not Likely to Volatilize, ID = Insufficient Data to Develop Criterion
4. G = GSI criterion depends on the pH or water hardness, or both; X = GSI criterion not protective of surface water utilized as drinking source
5. Cleanup Criteria from Michigan OP Memo RRD-1, Attachment 1, January 23, 2006

Table 2: Summary of Groundwater Analytical Results & Comparison to Residential Cleanup Criteria

Compound	Residential Drinking Water Criteria	Groundwater Surface Water Interface Criteria	Groundwater Volatilization to Indoor Air Inhalation Criteria	Groundwater Contact Criteria	GSB-3 @ 7-11'	GSB-7 @ 3-7'	GSB-10 @ 6-10'
Volatile Organic Compounds (VOCs)							
Tetrachloroethene	5.0	45	25,000	12,000	<MDL	<MDL	**1.7**
Trichloroethene	5.0	200	15,000	22,000	<MDL	<MDL	<MDL
Cis-1,2-dichloroethene	70	620	93,000	200,000	<MDL	**12**	<MDL
Vinyl Chloride	2.0	15	1,100	1,000	**2.3**	**2.8**	<MDL
All other VOCs	NA	NA	NA	NA	<MDL	<MDL	<MDL
Polynuclear Aromatic Hydrocarbons (PNAs)							
All PNAs	NA	NA	NA	NA	<MDL	<MDL	<MDL
Metals							
Arsenic	10	150	NLV	4,300	<MDL	**27**	<MDL
Barium	2,000	G,X	NLV	1.4E+7	**150**	**220**	<MDL
Cadmium	5.0 (A)	G,X	NLV	190,000	<MDL	<MDL	<MDL
Chromium	100 (A)	11	NLV	460,000	<MDL	<MDL	<MDL
Lead	4.0 (L)	G,X	NLV	ID	<MDL	<MDL	<MDL
Selenium	50	5.0	NLV	970,000	<MDL	<MDL	<MDL

Notes:
1. All sample results in µg/L (parts per billion)
2. Result **bolded** where detected, **bolded** and shaded where exceeding applicable cleanup criteria
3. <MDL = Less Than Method Detection Limit, NA = Not Applicable, NLV = Not Likely to Volatilize, ID = Insufficient Data to Develop Criterion
4. A = Criterion is the State of Michigan drinking water standard established pursuant to Section 5 of 1976 PA 399, MCL 325.1005; G = GSI criterion depends on the pH or water hardness, or both; L = Criteria for lead are derived using a biologically based model, as allowed for under Section 20120a(10) of the NREPA, X = GSI criterion not protective of surface water utilized as drinking source
5. Cleanup Criteria from Michigan OP Memo RRD-1, Attachment 1, January 23, 2006

Table 3: Summary of Sub-Slab Analytical Results & Comparison to Acceptable Residential & Industrial Soil Gas Screening Concentrations

Compound	Sub-Slab Residential Acceptable Soil-Gas Screening Concentration	Sub-Slab Industrial Acceptable Soil-Gas Screening Concentration	SUB-1	SUB-2	SUB-3	SUB-4	SUB-5	SUB-6	SUB-7	SUB-8	SUB-9	SUB-10	SUB-11	SUB-12	SUB-13	SUB-14	SUB-15	SUB-16	SUB-17	SUB-18
Tetrachloroethene	310	1,300	**3,200**	**17,000**	**8,200**	**1,600**	**220**	<MDL	<MDL	**11**	**75**	**510**	**4,000**	**75**	**92**	**82**	**320**	<MDL	**25**	<MDL
Trichloroethene	130	540	<MDL	**160**	<MDL	**30**	<MDL	<MDL	<MDL	<MDL	<MDL	<MDL	<MDL	<MDL	<MDL	<MDL	<MDL	<MDL	<MDL	<MDL
Cis-1,2-dichloroethene	450	640	<MDL	<MDL	<MDL	<MDL	<MDL	<MDL	<MDL	<MDL	<MDL	<MDL	<MDL	<MDL	<MDL	<MDL	<MDL	<MDL	<MDL	<MDL
Vinyl Chloride	110	450	<MDL	<MDL	<MDL	<MDL	<MDL	<MDL	<MDL	<MDL	<MDL	<MDL	<MDL	<MDL	<MDL	<MDL	<MDL	<MDL	<MDL	<MDL
All Other VOCs	NA	NA	<MDL	<MDL	<MDL	<MDL	<MDL	<MDL	<MDL	<MDL	<MDL	<MDL	<MDL	<MDL	<MDL	<MDL	<MDL	<MDL	<MDL	<MDL

Notes:
1. All sample results in ppbv (parts per billion by volume)
2. <MDL = Less Than Method Detection Limit
3. Result **bolded** where detected, **bolded** and shaded where exceeding Residential and/or Industrial Screening Concentrations
4. Acceptable Soil Gas Screening Concentrations (ASGSCs) from MDEQ Op. Memo. No. 4, Appendix B

Soil/Groundwater Analytical Results

No VOCs were identified above the method detection limit in the soil samples collected across the subject property. This is consistent with the field observations and lack of PID responses noted during sample collection. It should be noted that the method detection limit for vinyl chloride was elevated in the soil samples. The elevated reporting limits exceed the Residential Drinking Water Protection criterion. However, the elevated reporting limits do not exceed additional Residential Cleanup criteria.

The detection of VOCs in groundwater was limited to the volatile halocarbons tetrachloroethene, cis-1,2-dichloroethene, and vinyl chloride. Tetrachloroethene was detected below Residential Cleanup criteria near the northeast corner of the subject building (GSB-10). Cis-1,2-dichloroethene was detected below Residential Cleanup criteria southeast of the subject building (GSB-7). Vinyl chloride was identified in groundwater above the Residential Drinking Water criterion west (GSB-3) and southeast (GSB-7) of the subject building. The detection of volatile halocarbons in groundwater is consistent with the previously identified contaminant conditions on the subject property.

The detection of PNAs in soil was limited to three boring locations: GSB-4, GSB-7, and GSB-9. The concentrations of the select PNAs identified in borings GSB-7 and GSB-9 do not exceed Residential Cleanup criteria. The concentrations of select PNAs in boring GSB-4 exceed the Groundwater-Surface Water Interface Protection (GSIP) criteria and/or the Residential Direct Contact criteria. As indicated, boring GSB-4 was installed at an exterior location west of the subject building. No odors or staining of the soil were noted at this location during sample collection. The presence of PNAs in the soil sample at this location may be attributable to fill material encountered in shallow soils at this location. No PNAs were identified in any of the groundwater samples collected on the subject property. The lack of detection of PNAs in groundwater down gradient of GSB-4 would appear to indicate that PNAs are not leaching from soil to groundwater.

Metals were identified in all soil samples collected across the subject property. With the exception of arsenic, chromium, lead and zinc at select locations, the reported concentrations of metals were below State Wide Default Background Levels. The reported concentrations of arsenic at the majority of the sample locations exceeded the Residential Drinking Water Protection and/or Residential Direct Contact criteria. The concentration of selenium in soil at location GSB-8 is in excess of the Groundwater-Surface Water Interface Protection criterion. The concentrations of chromium in zinc in soil do not exceed Residential Cleanup criteria. The detection of metals in groundwater

was limited to arsenic from boring GSB-7 and barium from borings GSB-3 and GSB-7. The reported concentration of arsenic from GSB-7 is in excess of the Residential Drinking Water criterion. The reported concentrations of barium in groundwater do not exceed Residential Drinking Water criteria.

Sub-Slab Soil Gas Analytical Results

Tetrachloroethene was identified above the method detection limit in the majority of the sub slab soil gas samples. The concentration of tetrachloroethene at five sample locations exceeds the Sub-Slab Industrial Acceptable Soil Gas Screening Concentration (ASGSC). Excedances of the Industrial ASGSC are focused around the perimeter of the easternmost former dry cleaning room (SUB-1 through SUB-4) and one sample point between the two former dry cleaning areas (SUB-11). The concentration of tetrachloroethene detected at sample location SUB-15 exceeds the Residential ASGSC but not the Industrial ASGSC. Trichloroethene was identified at two sample locations (SUB-2 and SUB-4). The reported concentration of trichloroethene at location SUB-2 exceeds the Residential ASGSC. No additional VOCs were identified above the method detection limit in the sub-slab soil gas samples.

An exceedance of the Industrial ASGSC for tetrachloroethene in association with former dry cleaning areas indicates the potential for unacceptable health exposures associated with future occupancy of the building relative to the volatilization of contaminants to indoor air. DeLisle has completed the installation of a soil vapor extraction (SVE) system on behalf of Goodwill Industries of SW Michigan to address the contaminant conditions identified beneath the building. It is the understanding of Envirologic that completion and on-going operation of an appropriate SVE system represents an acceptable remedy to address the identified contaminant conditions beneath the building. Specifically, it is the understanding of Envirologic that on-going operation of an SVE system with a radius of influence encompassing all areas of identified sub-slab soil gas ASGSC exceedances would satisfy “due care” obligations relative to the volatilization of contaminants to indoor air for Brown Family Holdings, LLC and Beckan Industries, Inc. as future owner/operator of the subject property. In order to evaluate the radius of influence for the SVE system, Envirologic obtained negative pressure readings (inches of water) from each of the sub-slab soil gas sample points utilizing a Magnehelic negative pressure gauge. A summary of the negative pressure readings obtained on April 2, 2009 is provided in Table 4 below. As detailed in Table 4, a negative pressure reading was

obtained from each sample point for which an exceedance of the Industrial ASGSC was identified.

Table 4: Summary of Negative Pressure Readings for Sub-Slab Soil Gas Vapor Sample Points

Location	SUB-1	SUB-2	SUB-3	SUB-4	SUB-5	SUB-6	SUB-7	SUB-8	SUB-9	SUB-10	SUB-11	SUB-12	SUB-13	SUB-14	SUB-15	SUB-16	SUB-17	SUB-18
Negative Pressure (Inches of Water) (4/2/09)	0.15	0.02	0.04	0.04	0.02	0.0	0.0	0.0	0.05	0.06	0.32	0.0	0.12	0.0	0.0	0.0	0.0	0.0

As indicated, DeLisle completed additional investigation activities on the subject property in May of 2009. The results of the investigation were presented to the MDEQ in June of 2009 (Appendix F). The investigation was conducted to further evaluate contaminant conditions beneath the building and evaluate the performance of the SVE system. The investigation involved the installation of thirteen additional borings within the building for the collection of soil and soil gas samples. The soil samples were collected to delineate the extent of soil impact in excess of Volatilization to Indoor Air criteria. The soil gas samples were collected to characterize conditions from the 5 ft. bgl interval. Seven soil gas wells were installed for the collection of the soil gas samples. The soil gas wells also served as monitoring points to measure vacuum influence of the SVE system. The results of the investigation demonstrate that the extent of impact to soil in excess of the Volatilization to Indoor Air Inhalation criteria has been achieved. The investigation further demonstrates that the radius of influence for each of the four vapor extraction wells exceeds the initial estimate of 30 ft. The DeLisle results indicate a negative pressure reading in association with all sub slab soil gas sampling points for which an ASGSC exceedance was identified. A figure prepared by DeLisle depicting the negative pressure readings as well as the radius of influence around the each of the four extraction wells is presented in Appendix A. The completed documentation presented in the DeLisle report demonstrates that operation of the SVE system results in creating the negative pressure required to serve as a presumptive remedy ensuring that no unacceptable health exposures will occur associated with occupancy of the building relative to the volatilization of contaminants to indoor air. Refer to the DeLisle report in Appendix F for further documentation of SVE system performance.

CONCLUSIONS AND RECOMMENDATIONS

Identification of potential environmental concerns at the project site has been limited to those items that may be administratively determined within the scope of this project. Envirologic has performed the Phase I ESA in accordance with the ASTM Standard Practice E1527-05. Additional non-CERCLA issues that are not typically part of the ASTM standard scope of services (i.e., asbestos, lead paint, radon, mold, wetlands and universal wastes) were not addressed as part of this Phase I ESA investigation.

We have performed a Phase I Environmental Site Assessment in conformance with the scope and limitations of ASTM Practice E 1527-05 of property located at 2700 N. Pitcher St., Kalamazoo Township, Michigan. No exceptions to, or deletions from, this practice are identified in this report. This assessment has revealed no evidence of Recognized Environmental Conditions in connection with the property; except for the following:

- The subject property meets the definition of a "facility," as defined by Part 201 of NREPA based upon the concentrations of select petroleum and halogenated volatile organic compounds identified in soil/groundwater;
- The subject property is identified as an "open" MDEQ Leaking Underground Storage Tank (LUST) site based upon a gasoline release reported in 2007;
- Tetrachloroethene was historically utilized on the subject property in support of dry cleaning operations. The concentrations of volatile halocarbons in soil and sub-slab soil gas beneath the subject building exceed Industrial Volatilization to Indoor Air and Acceptable Soil Gas Screening Concentrations. The contaminant conditions indicate the necessity for on-going future operation of a Soil Vapor Extraction (SVE) system in order to satisfy "due care" obligations associated with occupancy of the subject building.

Based upon the identified contaminant conditions, a Baseline Environmental Assessment and Section 7a Compliance Analysis has been completed on behalf of Brown Family Holdings, LLC and Beckan Industries, Inc. in order to maintain remedial liability exemption and document satisfaction of on-going "due care" obligations.

In addition, Envirologic presents the following recommendations:

- Brown Family Holdings, LLC and Beckan Industries, Inc. should be aware of the necessity for on-going operation of the SVE system in the future in order to

unsure that no unacceptable health exposures will occur as a result of occupancy of the building;

- Brown Family Holdings, LLC and Beckan Industries, Inc. should be aware of potential site use restrictions (prohibiting the development of groundwater, maintenance of impervious cover) and on-going liable party access proposed to respond to contaminant conditions identified on the subject property;
- Impervious cover should be put in-place over the area of bare soil associated with the former UST vault near the northeast corner of the subject building;
- Miscellaneous debris and rubbish present on eastern portions of the subject property should be removed and properly disposed;
- The water tower present on the eastern portion of the site should be properly removed from the subject property.

Off-site Concerns

The potential for off-site activities to adversely impact the subject property has been evaluated. MDEQ file information indicates the presence of vinyl chloride in groundwater on western portions of the subject property that is attributed to the off-site Borroughs property located hydraulically up gradient of the subject property. The concentration of vinyl chloride identified on western portions of the subject property exceeds the Industrial Drinking Water criterion. There are no exceedances of additional exposure pathways relative to the groundwater contaminant conditions identified on up gradient portions of the subject property. Brown Family Holdings, LLC should be aware of any potential discussion Goodwill has completed with Borroughs regarding future site access and proposed site use restrictions.

FEDERAL BROWNFIELD AMENDMENTS TO CERCLA

The Small Business Liability Relief and Brownfields Revitalization Act of 2002 amended the Comprehensive Environmental Response, Compensation and Liability Act (CERCLA) to provide liability limitations for certain landowners. The due diligence effort completed by Envirologic was designed, in part, to meet the requirements that allow landowners to qualify for those protections.

Where no contamination has been evident, the completion of "all appropriate inquiry" was intended to help qualify a landowner as either an "innocent landowner" and/or a "contiguous property owner" with respect to liabilities that may be discovered in the future.

Where contamination has been discovered, the effort was also designed to partly establish a landowner as a "Bona Fide Prospective Purchaser" (one of the requirements is a demonstration that the landowner is not affiliated with any liable party and is beyond the scope of Envirologic's services). To qualify as a "Bona Fide Prospective Purchaser," the landowner must also:

1. comply with any land use restrictions;
2. not impede the effectiveness of integrity of any institutional control;
3. take reasonable steps to stop continuing releases, prevent future releases and prevent or limit human and environmental exposures to hazardous substances;
4. provide cooperation access, and assistance to persons authorized to conduct response actions;
5. comply with information requests and
6. provide any legally required notices.

LIMITATIONS

A Phase I ESA represents an attempt to perform an appropriate, particular and reasonable inquiry consistent with good commercial and customary practice. The Phase I ESA is, by necessity, a limited investigation. It is not possible to address all past or present land uses and/or site practices that may have affected the quality of the local environment. However, in the professional opinion of Envirologic Technologies, Inc., an appropriate level of inquiry has been made into the previous ownership and uses of the property consistent with good commercial and customary practice in an effort to minimize liability. Interpretations of information provided in this report should be made with respect to the limitations and availability of the data. The results and conclusions of this study do not insure, warrant or represent that there are no additional environmental issues that might be discovered if additional subsurface investigations were to be undertaken.

Additional non-CERCLA issues that are not typically part of the ASTM standard scope of services (i.e., asbestos, lead paint, radon, mold, wetlands and universal wastes) were not addressed as part of this Phase I ESA investigation.

QUALIFICATIONS OF ENVIRONMENTAL PROFESSIONALS

The following individuals have conducted this Phase I ESA in accordance with the All Appropriate Inquiry Rule 40 CFR Part 312 and are Environmental Professionals.

We declare that, to the best of our professional knowledge and belief, we meet the definition of Environmental Professional as defined in §312.10 of this part. We have the specific qualifications based on education, training, and experience to assess a property of the nature, history and setting of the subject property. We have developed and performed all appropriate inquiries in conformance with the standards and practices set forth in 40 CFR 312.

Erik D. Peterson
Project Manager

Erik D. Peterson graduated with a Bachelor of Science degree in Hydrogeology from Western Michigan University. Mr. Peterson has been HAZWOPER supervisor certified since May of 1998. Mr. Peterson is an accredited Asbestos Building Inspector through the Michigan Department of Consumer and Industry Services. Mr. Peterson has five years of experience with Envirologic in areas of Phase I and Phase II ESAs, Baseline Environmental Assessments (BEAs) and project management.

David A. Stegink
Associate Vice President

David A. Stegink graduated from Hope College with a Bachelor of Science degree in Chemistry/Biology and has over twenty years of environmental-related experience. Mr. Stegink has served as Environmental Compliance Manager for Envirologic since 1991. Between 1984 and 1991, Mr. Stegink served as a Chemist and Operations Manager for a commercial hazardous waste treatment facility. Mr. Stegink's expertise includes transactional environmental liability, property assessments including Phase I and II ESAs, baseline environmental assessments (BEAs), hazardous waste management, underground storage tanks, storm water management, and environmental policy and regulations.

APPENDIX A

SITE FIGURES

Figure 1: Location Map
Figure 2: Site Plan
Figure 3: Envirologic Sampling Locations
DeLisle Figure 2: Sampling Locations
DeLisle Figure 6: SVE System Well Piping Layout
DeLisle Site Map-1: Soil Sampling and Soil Gas Well (SGW) Locations
DeLisle Site Map-2: Vapor Extraction Radius of Influence

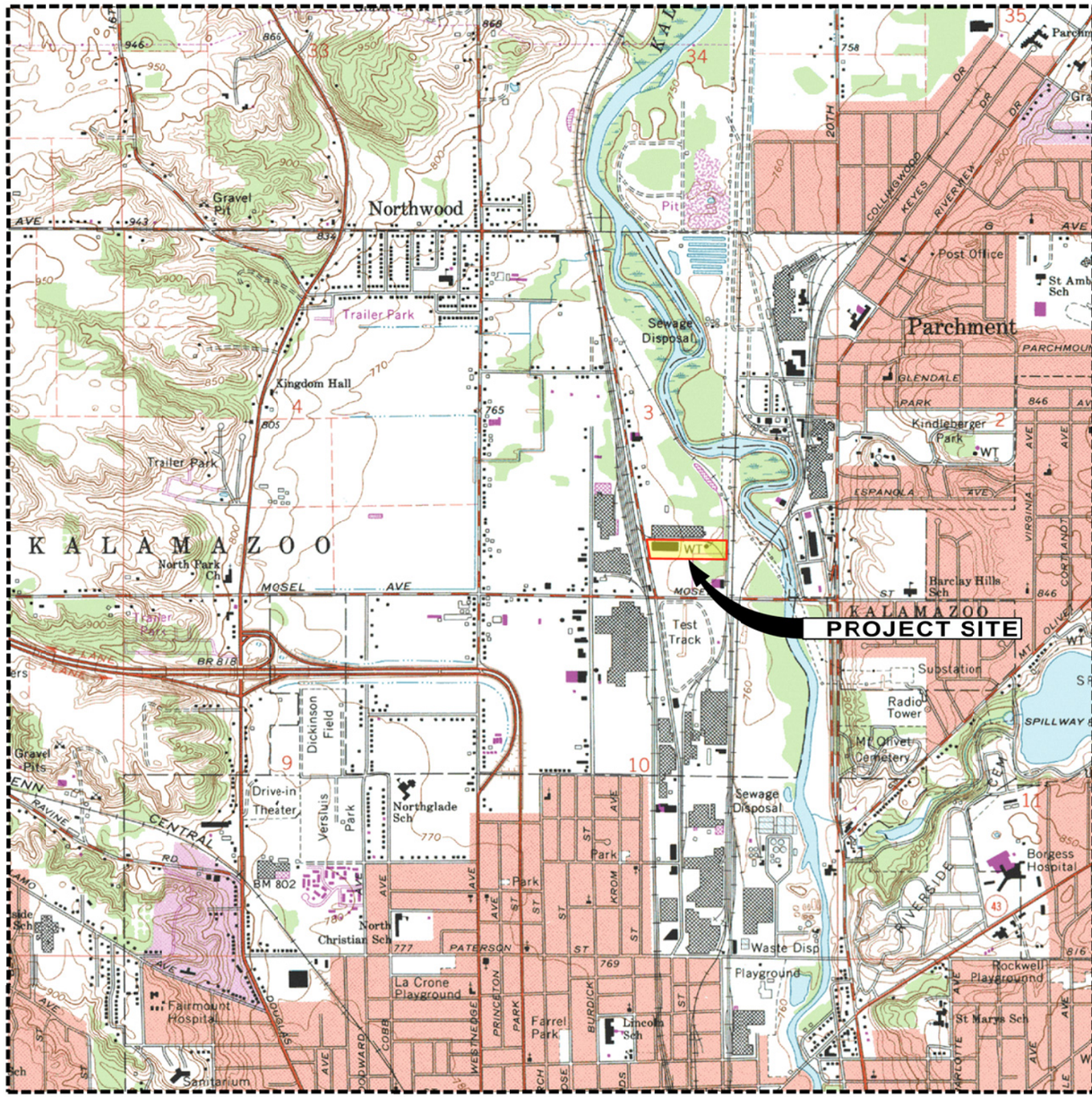

SOURCE: CONSTANTINE, MICHIGAN USGS 7.5 MINUTE TCPOGRAPHIC QUADRANGLE MAPS
MAPTECH1© U.S. TERRAIN SERIES™ ®MAPTECH©, INC. 606-433-8500

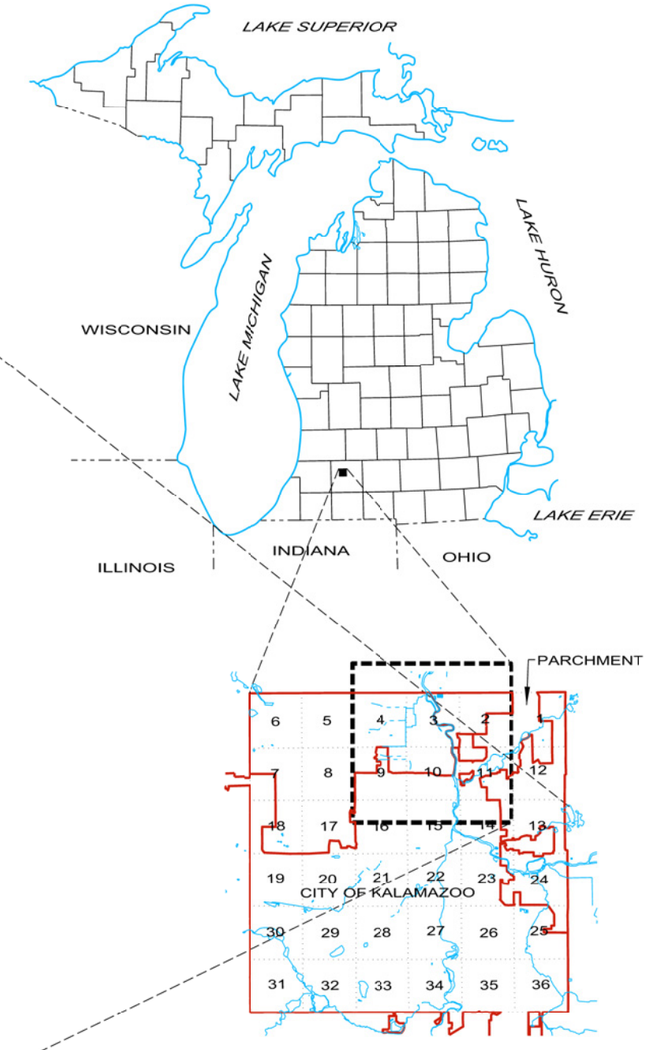

T 2 S. R. 11 W.
KALAMAZOO TOWNSHIP
KALAMAZOO COUNTY, MICHIGAN

N
W E
S

0 500 1000 2000 4000
SCALE 1" = 2000'

FORMER GOODWILL INDUSTRIES OF SOUTHWEST MICHIGAN

2700 NORTH PITCHER STREET
KALAMAZOO, MICHIGAN 49009

LOCATION MAP

ENVIROLOGIC TECHNOLOGIES, INC.
2960 INTERSTATE PARKWAY
KALAMAZOO, MICHIGAN 49048
PH: (269) 342-1100 FAX: (269) 342-4945

PROJECT NO. 080503
FIGURE NO: 1

KZOOCO 080503_080503_Site_Plan.dgn, Location Map

NOTE:
THIS IS NOT A PROPERTY BOUNDARY SURVEY, PROPERTY BOUNDARIES SHOWN ON THIS MAP ARE BASED ON AVAILABLE FURNISHED INFORMATION. BOUNDARIES SHOWN ARE APPROXIMATE ONLY AND SHOULD NOT BE USED TO ESTABLISH PROPERTY BOUNDARY LOCATION IN THE FIELD.

NOTE: AERIAL PHOTOGRAPHY: 2007 COLOR ORTHOPHOTO, OBTAINED FROM THE CITY OF KALAMAZOO ON LINE GIS VIEWER.

N
W E
S

SCALE 1" = 100'
0 50 100 200

FORMER GOODWILL INDUSTRIES OF SOUTHWEST MICHIGAN

2700 NORTH PITCHER STREET
KALAMAZOO, MICHIGAN 49004

SITE PLAN

ENVIROLOGIC TECHNOLOGIES, INC.
2960 INTERSTATE PARKWAY
KALAMAZOO, MICHIGAN 49048
PH: (269) 342-1100 FAX: (269) 342-4945

PROJECT NO. 080503

FIGURE No. 2

KZOOCO 080503_080503_Site_Plan.dgn, Site Plan A

LEGEND

- GEOPROBE® SOIL BORING LOCATIONS
- SUB-SLAB VAPOR SAMPLE LOCATIONS

NOTE: INTERNAL BUILDING LAYOUT TAKEN FROM FURNISHED BUILDING PLAN.

N
W E
S

SCALE 1" = 50'
0 10 20 30 40 50 100

NOTE: AERIAL PHOTOGRAPHY: 2007 COLOR ORTHOPHOTO, OBTAINED FROM THE CITY OF KALAMAZOO ON LINE GIS VIEWER.

NOTE:
THIS IS NOT A PROPERTY BOUNDARY SURVEY, PROPERTY BOUNDARIES SHOWN ON THIS MAP ARE BASED ON AVAILABLE FURNISHED INFORMATION. BOUNDARIES SHOWN ARE APPROXIMATE ONLY AND SHOULD NOT BE USED TO ESTABLISH PROPERTY BOUNDARY LOCATION IN THE FIELD.

FORMER GOODWILL INDUSTRIES OF SOUTHWEST MICHIGAN

2700 NORTH PITCHER STREET
KALAMAZOO, MICHIGAN 49004

SAMPLING LOCATIONS

ENVIROLOGIC TECHNOLOGIES, INC.
2960 INTERSTATE PARKWAY
KALAMAZOO, MICHIGAN 49048
PH: (269) 342-1100 FAX: (269) 342-4945

PROJECT NO. 080503

FIGURE No. 3

KZOOCO 080503_080503_Site_Plan.dgn, Site Plan B

DeLisle Associates LTD

Property Line

BH-2
MW-5

Goodwill Industries

Concrete Ramp

BH-11
BH-17
MW-2
BH-12
Bare ground
BH-10

Loading Dock Area

Asphalt

Concrete Dock

Property Line

BH-6
BH-7

BH-21
BH-4
BH-19
BH-8
Dry Cleaning Room
BH-9 MW-6
BH-20
BH-3
BH-5
Former Floor Drain

BH-13

BH-25

Sanitary Line
BH-24

BH-14

BH-26

BH-23
BH-22
BH-27

BH-16

BH-1

MW-9

Property Line

BH-28
MW-7
BH-18
BH-15
MW-8

LEGEND

N

Groundwater Monitoring Well (MW)

Bore Hole (BH)
Soil and/or groundwater sample

Burried Utility

Scale
1" = 40 ft

Figure 2 - Sampling Locations

Goodwill Industries of SW Michigan
2700 North Pitcher Street
Kalamazoo, Michigan

Date:	Job No.
October/November/December 2008 January/February 2009	EN08-044

DeLisle Associates LTD

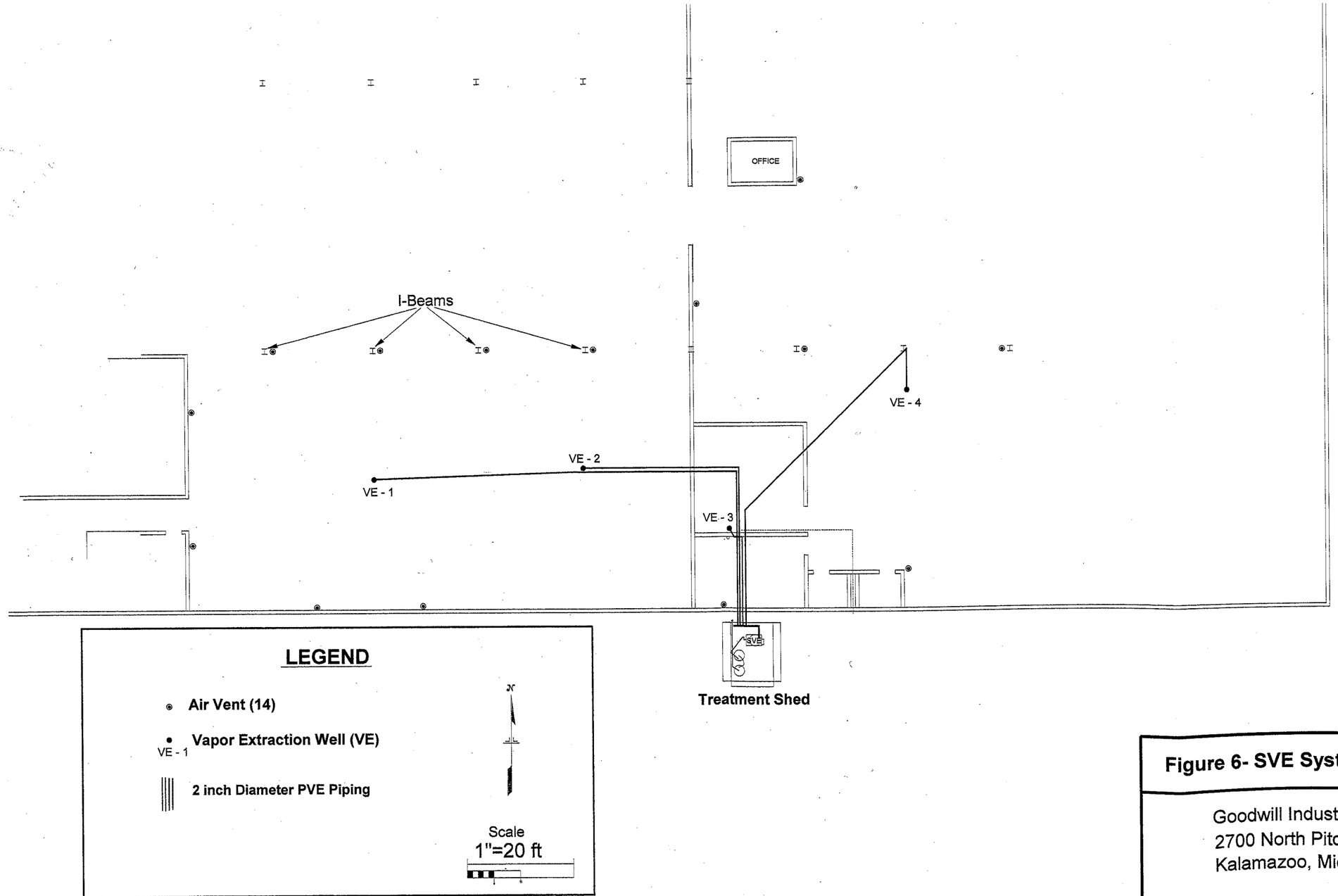

Figure 6- SVE System Well Piping Layout

Goodwill Industries of SW Michigan
2700 North Pitcher Street
Kalamazoo, Michigan

March 2009

DeLisle Associates LTD

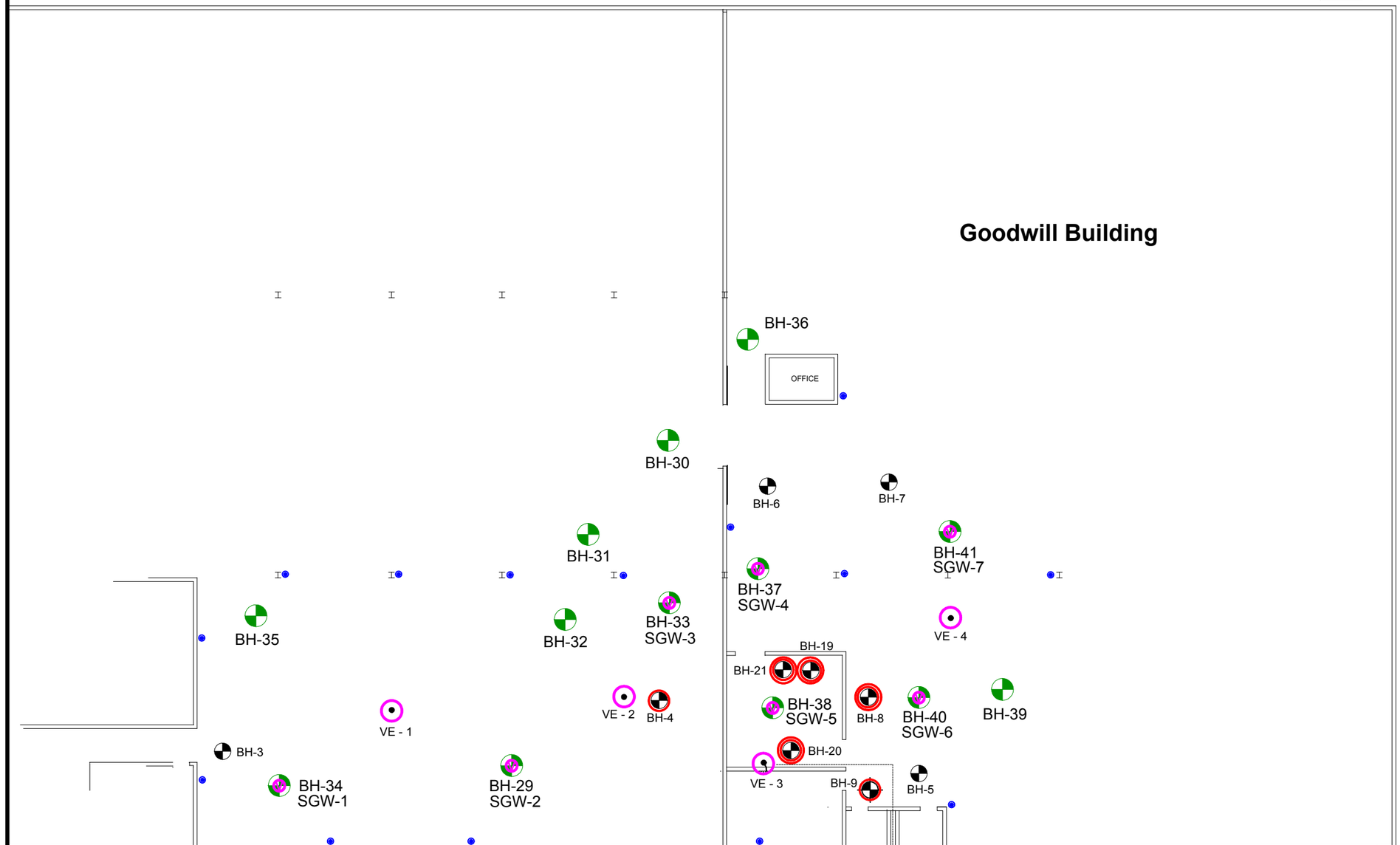

LEGEND

BH-35 Soil Borings BH-29 to BH-41 Conducted in May 2009

BH-29 SGW-2 Soil Boring with Soil Gas Well installed.

VE - 1 Soil Vapor Extraction Well

Air Vent (14)

Vacuum at 25 cfm per VE well (100 cfm SVE system total)

Soil sample with PCE and TCE exceeding Indoor Air Criteria

Soil sample with PCE exceeding Indoor Air Criteria

N

Scale 1"=20 ft

5 10

SITE MAP -1

Soil Sampling and Soil Gas Well (SGW) Locations

Goodwill Industries of SW Michigan
2700 North Pitcher Street
Kalamazoo, Michigan

May 18, 2009

DeLisle Associates LTD

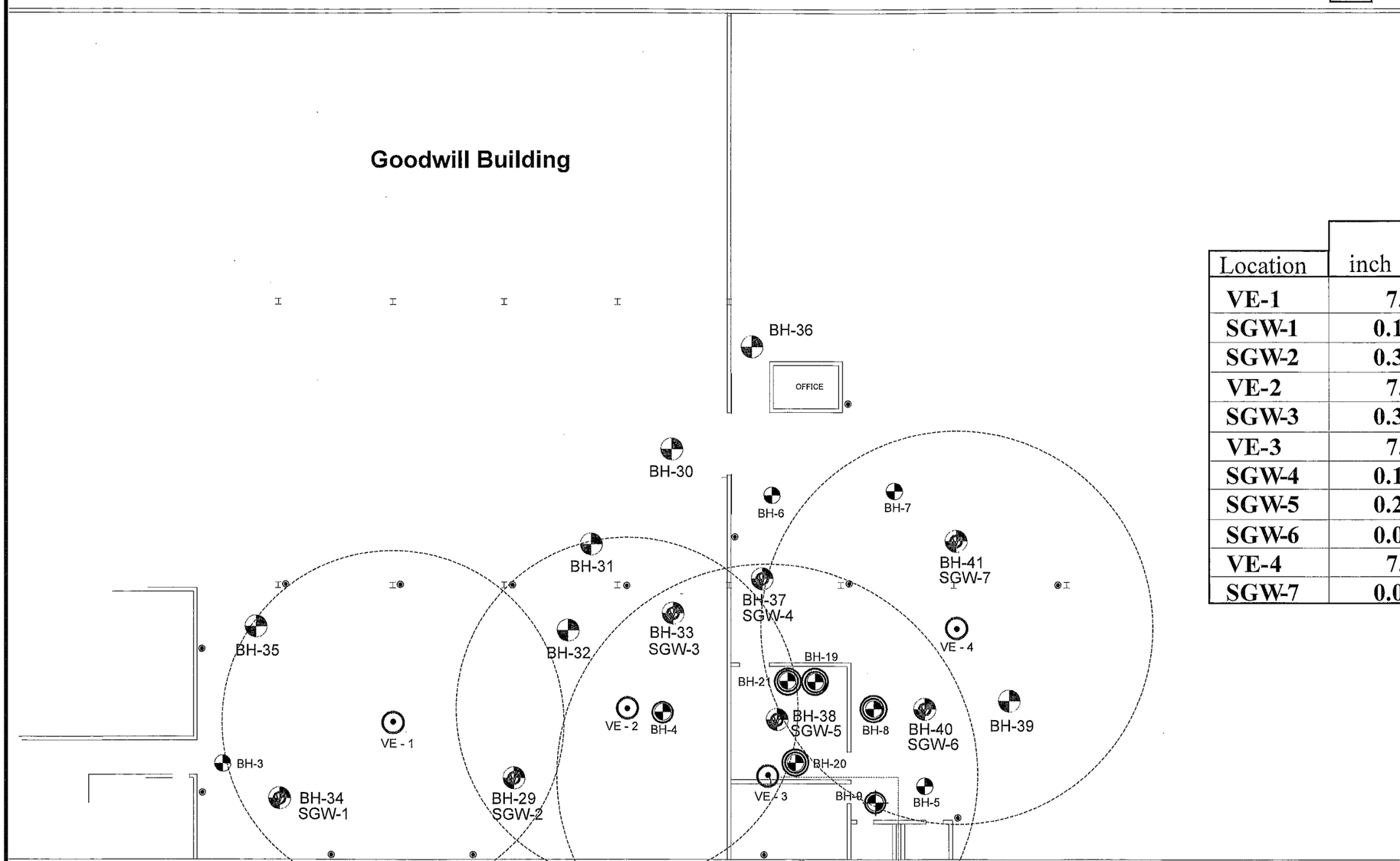

Location	Vacuum inch H_2O	Vacuum CFM
VE-1	7.0	~20-25
SGW-1	0.135	---
SGW-2	0.330	---
VE-2	7.0	~20-25
SGW-3	0.330	---
VE-3	7.0	~20-25
SGW-4	0.145	---
SGW-5	0.235	---
SGW-6	0.030	---
VE-4	7.1	~20-25
SGW-7	0.055	---

LEGEND

- BH-35 — Soil Borings BH-29 to BH-41 Conducted in May 2009
- BH-29 SGW-2 — Soil Boring with Soil Gas Well installed.
- VE - 1 — Soil Vapor Extraction Well
- Air Vent (14)
- Soil sample with PCE and TCE exceeding Indoor Air Criteria
- Soil sample with PCE exceeding Indoor Air Criteria
- Vapor Extraction Well Minimum Radius of Influence

N

Scale 1"=20 ft

5 10

SITE MAP -2

Vapor Extraction Radius of Influence

Goodwill Industries of SW Michigan
2700 North Pitcher Street
Kalamazoo, Michigan

May 29, 2009

APPENDIX B

SITE PHOTOGRAPHS

West Side of Subject Building

Southern Property Boundary, Facing West

Northern Property Boundary, Facing West

East Side of Subject Building

Former UST Vault Area

Former UST Dispenser Location

Concrete Cover, East of Subject Building

Two-Track on Eastern Portion of the Property

Fence/Gate Near Southeast Corner of Building

Shipping/Receiving Bay to be Utilized by Beckan Industries

Typical Office Space

Typical Office Space

Warehouse Space

Warehouse Space

Warehouse Space

Water Tower

Miscellaneous Storage in Bay on East Side of Building

Former Goodwill Retail Area

Former Dry Cleaning Room

Debris on Eastern Portions of the Subject Property

Debris on Eastern Portions of the Subject Property

Debris on Eastern Portions of the Subject Property

Debris on Eastern Portions of the Subject Property

Zantman Drain

Base of Water Tower

APPENDIX C

ENVIRONMENTAL RADIUS REPORT

Goodwill Industries
2700 N. Pitcher St.
Kalamazoo, MI 49004

Inquiry Number: 2394830.2s
January 07, 2009

The EDR Radius Map™ Report

EDR® Environmental Data Resources Inc

440 Wheelers Farms Road
Milford, CT 06461
Toll Free: 800.352.0050
www.edrnet.com

TABLE OF CONTENTS

SECTION	PAGE
Executive Summary	ES1
Overview Map	2
Detail Map	3
Map Findings Summary	4
Map Findings	7
Orphan Summary	88
Government Records Searched/Data Currency Tracking	GR-1

GEOCHECK ADDENDUM

GeoCheck - Not Requested

Thank you for your business.
Please contact EDR at 1-800-352-0050
with any questions or comments.

Disclaimer - Copyright and Trademark Notice

This Report contains certain information obtained from a variety of public and other sources reasonably available to Environmental Data Resources, Inc. It cannot be concluded from this Report that coverage information for the target and surrounding properties does not exist from other sources. **NO WARRANTY EXPRESSED OR IMPLIED, IS MADE WHATSOEVER IN CONNECTION WITH THIS REPORT. ENVIRONMENTAL DATA RESOURCES, INC. SPECIFICALLY DISCLAIMS THE MAKING OF ANY SUCH WARRANTIES, INCLUDING WITHOUT LIMITATION, MERCHANTABILITY OR FITNESS FOR A PARTICULAR USE OR PURPOSE. ALL RISK IS ASSUMED BY THE USER. IN NO EVENT SHALL ENVIRONMENTAL DATA RESOURCES, INC. BE LIABLE TO ANYONE, WHETHER ARISING OUT OF ERRORS OR OMISSIONS, NEGLIGENCE, ACCIDENT OR ANY OTHER CAUSE, FOR ANY LOSS OF DAMAGE, INCLUDING, WITHOUT LIMITATION, SPECIAL, INCIDENTAL, CONSEQUENTIAL, OR EXEMPLARY DAMAGES. ANY LIABILITY ON THE PART OF ENVIRONMENTAL DATA RESOURCES, INC. IS STRICTLY LIMITED TO A REFUND OF THE AMOUNT PAID FOR THIS REPORT.** Purchaser accepts this Report "AS IS". Any analyses, estimates, ratings, environmental risk levels or risk codes provided in this Report are provided for illustrative purposes only, and are not intended to provide, nor should they be interpreted as providing any facts regarding, or prediction or forecast of, any environmental risk for any property. Only a Phase I Environmental Site Assessment performed by an environmental professional can provide information regarding the environmental risk for any property. Additionally, the information provided in this Report is not to be construed as legal advice.

Copyright 2009 by Environmental Data Resources, Inc. All rights reserved. Reproduction in any media or format, in whole or in part, of any report or map of Environmental Data Resources, Inc., or its affiliates, is prohibited without prior written permission.

EDR and its logos (including Sanborn and Sanborn Map) are trademarks of Environmental Data Resources, Inc. or its affiliates. All other trademarks used herein are the property of their respective owners.

EXECUTIVE SUMMARY

A search of available environmental records was conducted by Environmental Data Resources, Inc (EDR). The report was designed to assist parties seeking to meet the search requirements of EPA's Standards and Practices for All Appropriate Inquiries (40 CFR Part 312), the ASTM Standard Practice for Environmental Site Assessments (E 1527-05) or custom requirements developed for the evaluation of environmental risk associated with a parcel of real estate.

TARGET PROPERTY INFORMATION

ADDRESS

2700 N. PITCHER ST.
KALAMAZOO, MI 49004

COORDINATES

Latitude (North):	42.318400 - 42˚ 19' 6.2''
Longitude (West):	85.580000 - 85˚ 34' 48.0''
Universal Tranverse Mercator:	Zone 16
UTM X (Meters):	617017.3
UTM Y (Meters):	4685891.0
Elevation:	760 ft. above sea level

USGS TOPOGRAPHIC MAP ASSOCIATED WITH TARGET PROPERTY

Target Property Map:	42085-C5 KALAMAZOO, MI
Most Recent Revision:	1995

AERIAL PHOTOGRAPHY IN THIS REPORT

Portions of Photo from:	2006, 2005

TARGET PROPERTY SEARCH RESULTS

The target property was identified in the following records. For more information on this property see page 7 of the attached EDR Radius Map report:

Site	Database(s)	EPA ID
GOODWILL IND. OF S.W. MICHIGAN 2700 N PITCHER ST KALAMAZOO, MI 49004	LUST Facility Status: Open UST	N/A

DATABASES WITH NO MAPPED SITES

No mapped sites were found in EDR's search of available ("reasonably ascertainable ") government records either on the target property or within the search radius around the target property for the following databases:

STANDARD ENVIRONMENTAL RECORDS

Federal NPL site list

NPL---------- National Priority List

EXECUTIVE SUMMARY

Proposed NPL ..... Proposed National Priority List Sites
NPL LIENS ..... Federal Superfund Liens

Federal Delisted NPL site list

Delisted NPL ..... National Priority List Deletions

Federal CERCLIS list

CERCLIS ..... Comprehensive Environmental Response, Compensation, and Liability Information System

Federal RCRA non-CORRACTS TSD facilities list

RCRA-TSDF ..... RCRA - Transporters, Storage and Disposal

Federal RCRA generators list

RCRA-LQG ..... RCRA - Large Quantity Generators

Federal institutional controls / engineering controls registries

US ENG CONTROLS ..... Engineering Controls Sites List
US INST CONTROL ..... Sites with Institutional Controls

Federal ERNS list

ERNS ..... Emergency Response Notification System

State and tribal landfill and/or solid waste disposal site lists

SWF/LF ..... Solid Waste Facilities Database

State and tribal leaking storage tank lists

INDIAN LUST ..... Leaking Underground Storage Tanks on Indian Land

State and tribal registered storage tank lists

INDIAN UST ..... Underground Storage Tanks on Indian Land

State and tribal institutional control / engineering control registries

AUL ..... Engineering and Institutional Controls

State and tribal voluntary cleanup sites

INDIAN VCP ..... Voluntary Cleanup Priority Listing

ADDITIONAL ENVIRONMENTAL RECORDS

Local Brownfield lists

US BROWNFIELDS ..... A Listing of Brownfields Sites

Local Lists of Landfill / Solid Waste Disposal Sites

ODI ..... Open Dump Inventory

EXECUTIVE SUMMARY

DEBRIS REGION 9 ..... Torres Martinez Reservation Illegal Dump Site Locations
HIST LF ..... Inactive Solid Waste Facilities
INDIAN ODI ..... Report on the Status of Open Dumps on Indian Lands

Local Lists of Hazardous waste / Contaminated Sites

US CDL ..... Clandestine Drug Labs
CDL ..... Clandestine Drug Lab Listing

Local Land Records

LIENS 2 ..... CERCLA Lien Information
LUCIS ..... Land Use Control Information System
LIENS ..... Lien List

Records of Emergency Release Reports

HMIRS ..... Hazardous Materials Information Reporting System
SPILLS ..... Pollution Emergency Alerting System

Other Ascertainable Records

DOT OPS ..... Incident and Accident Data
DOD ..... Department of Defense Sites
FUDS ..... Formerly Used Defense Sites
CONSENT ..... Superfund (CERCLA) Consent Decrees
ROD ..... Records Of Decision
UMTRA ..... Uranium Mill Tailings Sites
MINES ..... Mines Master Index File
TRIS ..... Toxic Chemical Release Inventory System
TSCA ..... Toxic Substances Control Act
FTTS ..... FIFRA/ TSCA Tracking System - FIFRA (Federal Insecticide, Fungicide, & Rodenticide Act)/TSCA (Toxic Substances Control Act)
HIST FTTS ..... FIFRA/TSCA Tracking System Administrative Case Listing
SSTS ..... Section 7 Tracking Systems
ICIS ..... Integrated Compliance Information System
PADS ..... PCB Activity Database System
MLTS ..... Material Licensing Tracking System
RADINFO ..... Radiation Information Database
FINDS ..... Facility Index System/Facility Registry System
RAATS ..... RCRA Administrative Action Tracking System
DRYCLEANERS ..... Drycleaning Establishments
NPDES ..... List of Active NPDES Permits
AIRS ..... Permit and Emissions Inventory Data
INDIAN RESERV ..... Indian Reservations
SCRD DRYCLEANERS ..... State Coalition for Remediation of Drycleaners Listing
PWS ..... Public Water System Data

EDR PROPRIETARY RECORDS

EDR Proprietary Records

Manufactured Gas Plants ..... EDR Proprietary Manufactured Gas Plants

SURROUNDING SITES: SEARCH RESULTS

Surrounding sites were identified in the following databases.

EXECUTIVE SUMMARY

Elevations have been determined from the USGS Digital Elevation Model and should be evaluated on a relative (not an absolute) basis. Relative elevation information between sites of close proximity should be field verified. Sites with an elevation equal to or higher than the target property have been differentiated below from sites with an elevation lower than the target property.
Page numbers and map identification numbers refer to the EDR Radius Map report where detailed data on individual sites can be reviewed.

Sites listed in ***bold italics*** are in multiple databases.

Unmappable (orphan) sites are not considered in the foregoing analysis.

STANDARD ENVIRONMENTAL RECORDS

Federal CERCLIS NFRAP site List

CERC-NFRAP: Archived sites are sites that have been removed and archived from the inventory of CERCLIS sites. Archived status indicates that, to the best of EPA's knowledge, assessment at a site has been completed and that EPA has determined no further steps will be taken to list this site on the National Priorities List (NPL), unless information indicates this decision was not appropriate or other considerations require a recommendation for listing at a later time. This decision does not necessarily mean that there is no hazard associated with a given site; it only means that, based upon available information, the location is not judged to be a potential NPL site.

A review of the CERC-NFRAP list, as provided by EDR, and dated 12/03/2007 has revealed that there are 2 CERC-NFRAP sites within approximately 0.5 miles of the target property.

Equal/Higher Elevation	Address	Direction / Distance	Map ID	Page
BORROUGHS CORP	***3002 N BURDICK ST***	***WNW 1/8 - 1/4 (0.236 mi.)***	***21***	***39***
FLINT INK CORP	***2309 NORTH BURDICK STRE***	***SSW 1/4 - 1/2 (0.365 mi.)***	***25***	***49***

Federal RCRA CORRACTS facilities list

CORRACTS: CORRACTS is a list of handlers with RCRA Corrective Action Activity. This report shows which nationally-defined corrective action core events have occurred for every handler that has had corrective action activity.

A review of the CORRACTS list, as provided by EDR, and dated 09/11/2008 has revealed that there are 2 CORRACTS sites within approximately 1 mile of the target property.

Equal/Higher Elevation	Address	Direction / Distance	Map ID	Page
CHECKER MOTORS CORPORATION	***2016 NORTH PITCHER STRE***	***S 1/2 - 1 (0.560 mi.)***	***I35***	***63***
SUN CHEMICAL CORP-GPI DIV	***1807 N PITCHER STREET***	***S 1/2 - 1 (0.673 mi.)***	***37***	***80***

Federal RCRA generators list

RCRA-SQG: RCRAInfo is EPA's comprehensive information system, providing access to data supporting the Resource Conservation and Recovery Act (RCRA) of 1976 and the Hazardous and Solid Waste Amendments (HSWA)

of 1984. The database includes selective information on sites which generate, transport, store, treat and/or dispose of hazardous waste as defined by the Resource Conservation and Recovery Act (RCRA). Small quantity generators (SQGs) generate between 100 kg and 1,000 kg of hazardous waste per month.

A review of the RCRA-SQG list, as provided by EDR, and dated 09/10/2008 has revealed that there is 1 RCRA-SQG site within approximately 0.25 miles of the target property.

Equal/Higher Elevation	Address	Direction / Distance	Map ID	Page
BORROUGHS CORP	***3002 N BURDICK ST***	***WNW 1/8 - 1/4 (0.236 mi.)***	***21***	***39***

RCRA-CESQG: RCRAInfo is EPA's comprehensive information system, providing access to data supporting the Resource Conservation and Recovery Act (RCRA) of 1976 and the Hazardous and Solid Waste Amendments (HSWA) of 1984. The database includes selective information on sites which generate, transport, store, treat and/or dispose of hazardous waste as defined by the Resource Conservation and Recovery Act (RCRA). Conditionally exempt small quantity generators (CESQGs) generate less than 100 kg of hazardous waste, or less than 1 kg of acutely hazardous waste per month.

A review of the RCRA-CESQG list, as provided by EDR, and dated 09/10/2008 has revealed that there are 2 RCRA-CESQG sites within approximately 0.25 miles of the target property.

Equal/Higher Elevation	Address	Direction / Distance	Map ID	Page
HAVILAND PROD CO	***2722 N BURDICK ST***	***W 1/8 - 1/4 (0.201 mi.)***	***C10***	***20***
KALAMAZOO OIL CO	***2601 N BURDICK ST***	***WSW 1/8 - 1/4 (0.222 mi.)***	***E19***	***32***

State- and tribal - equivalent CERCLIS

SHWS: The State Hazardous Waste Sites records are the states' equivalent to CERCLIS. These sites may or may not already be listed on the federal CERCLIS list. Priority sites planned for cleanup using state funds (state equivalent of Superfund) are identified along with sites where cleanup will be paid for by potentially responsible parties. The data come from the Department of Environmental Quality's' Contaminated Sites List on Diskette With Address.

A review of the SHWS list, as provided by EDR, and dated 11/13/2008 has revealed that there are 7 SHWS sites within approximately 1 mile of the target property.

Equal/Higher Elevation	Address	Direction / Distance	Map ID	Page
BORROUGHS CORP	***3002 N BURDICK ST***	***WNW 1/8 - 1/4 (0.236 mi.)***	***21***	***39***
Facility Status: Interim Response in progress				
PANELYTE	***2403 BURDICK***	***SW 1/4 - 1/2 (0.311 mi.)***	***F24***	***48***
Facility Status: Interim Response conducted				
2101-2225 N. PITCHER ST. - BIC	2101-2225 NORTH PITCHE	S 1/4 - 1/2 (0.495 mi.)	H31	59
Facility Status: Inactive - no actions taken to address contamination				
ALLEN TEST PRODUCTS	2101 N PITCHER STREET	S 1/4 - 1/2 (0.495 mi.)	H32	60
Facility Status: Interim Response in progress				
CLAUSING CORP	***2019 N PITCHER***	***S 1/2 - 1 (0.558 mi.)***	***I34***	***60***
Facility Status: Interim Response in progress				
CHECKER MOTORS CORPORATION	***2016 NORTH PITCHER STRE***	***S 1/2 - 1 (0.560 mi.)***	***I35***	***63***
Facility Status: Inactive - no actions taken to address contamination				
CROWN PAPER COMPANY CROWN VANT 100 ISLAND AVENUE		***NE 1/2 - 1 (0.759 mi.)***	***38***	***83***
Facility Status: Interim Response in progress				

EXECUTIVE SUMMARY

State and tribal leaking storage tank lists

LUST: The Leaking Underground Storage Tank Incident Reports contain an inventory of reported leaking underground storage tank incidents. The data come from the Department of Environmental Quality's Leaking Underground Storage Tank (LUST) Database.

A review of the LUST list, as provided by EDR, and dated 12/01/2008 has revealed that there are 7 LUST sites within approximately 0.5 miles of the target property.

Equal/Higher Elevation	Address	Direction / Distance	Map ID	Page
MALL CITY CONTAINERS INC Facility Status: Closed	***2710 N PITCHER ST***	***SW 0 - 1/8 (0.033 mi.)***	***A4***	***10***
EATON CORPORATION Facility Status: Open Facility Status: Open **Additional key fields are available in the Map Findings section*	222 E MOSEL AVE	W 1/8 - 1/4 (0.170 mi.)	B7	12
HAVILAND PRODUCTS CO Facility Status: Closed	***2722 N BURDICK ST***	***W 1/8 - 1/4 (0.201 mi.)***	***C11***	***24***
OVEN FRESH Facility Status: Closed	2609 N BURDICK ST	WSW 1/8 - 1/4 (0.220 mi.)	E17	32
KALAMAZOO OIL COMPANY Facility Status: Open Facility Status: Open **Additional key fields are available in the Map Findings section*	***2601 N BURDICK ST***	***WSW 1/8 - 1/4 (0.222 mi.)***	***E20***	***34***
ROWEN & BLAIR ELECTRIC CO Facility Status: Open	***2513 N BURDICK ST***	***SW 1/4 - 1/2 (0.256 mi.)***	***22***	***46***
IMPERIAL ADHESIVES INCORPORATE Facility Status: Closed	***3334 N. PITCHER ST.***	***NNW 1/4 - 1/2 (0.425 mi.)***	***G27***	***54***

State and tribal registered storage tank lists

UST: The Underground Storage Tank database contains registered USTs. USTs are regulated under Subtitle I of the Resource Conservation and Recovery Act (RCRA). The data come from the Department of Environmental Quality's Michigan UST database.

A review of the UST list, as provided by EDR, and dated 12/01/2008 has revealed that there are 5 UST sites within approximately 0.25 miles of the target property.

Equal/Higher Elevation	Address	Direction / Distance	Map ID	Page
MALL CITY CONTAINERS INC	***2710 N PITCHER ST***	***SW 0 - 1/8 (0.033 mi.)***	***A4***	***10***
EATON CORPORATION	222 E MOSEL AVE	W 1/8 - 1/4 (0.170 mi.)	B8	13
HAVILAND PRODUCTS CO	***2722 N BURDICK ST***	***W 1/8 - 1/4 (0.201 mi.)***	***C11***	***24***
KALAMAZOO DIVISION	2810 N BURDICK ST	W 1/8 - 1/4 (0.202 mi.)	D12	25
KALAMAZOO OIL COMPANY	***2601 N BURDICK ST***	***WSW 1/8 - 1/4 (0.222 mi.)***	***E20***	***34***

EXECUTIVE SUMMARY

AST: The Aboveground Storage Tank database contains registered ASTs. The data come from the Department of Natural Resources' Michigan AST database.

A review of the AST list, as provided by EDR, and dated 06/23/2008 has revealed that there are 2 AST sites within approximately 0.25 miles of the target property.

Equal/Higher Elevation	Address	Direction / Distance	Map ID	Page
HAVILAND PRODUCTS COMPANY	***2722 N BURDICK ST***	***W 1/8 - 1/4 (0.201 mi.)***	***C9***	***17***
KALAMAZOO OIL COMPANY	***2601 N BURDICK ST***	***WSW 1/8 - 1/4 (0.222 mi.)***	***E20***	***34***

State and tribal Brownfields sites

BROWNFIELDS: Brownfields and USTfield Site Database.

A review of the BROWNFIELDS list, as provided by EDR, and dated 12/16/2008 has revealed that there are 2 BROWNFIELDS sites within approximately 0.5 miles of the target property.

Equal/Higher Elevation	Address	Direction / Distance	Map ID	Page
FORMER EATON CORPORATION	222 EAST MOSEL AVENUE	W 1/8 - 1/4 (0.169 mi.)	B6	11
PANELYTE	***2403 BURDICK***	***SW 1/4 - 1/2 (0.311 mi.)***	***F24***	***48***

ADDITIONAL ENVIRONMENTAL RECORDS

Local Lists of Hazardous waste / Contaminated Sites

DEL SHWS: Sites that have been delisted or deleted from the List of Contaminated Sites.The available documentation for the site does support it's listing or the site no longer meets criteria specified in rules.

A review of the DEL SHWS list, as provided by EDR, and dated 11/19/2008 has revealed that there are 5 DEL SHWS sites within approximately 1 mile of the target property.

Equal/Higher Elevation	Address	Direction / Distance	Map ID	Page
MALL CITY CONTAINERS	2710 PITCHER	SW 0 - 1/8 (0.033 mi.)	A3	10
OVEN FRESH	2609 N BURDICK ST.	WSW 1/8 - 1/4 (0.220 mi.)	E18	32
IMPERIAL ADHESIVES	3334 N. PITCHER STREET	NNW 1/4 - 1/2 (0.425 mi.)	G26	54
CHECKER MOTORS CORPORATION	***2016 NORTH PITCHER STRE***	***S 1/2 - 1 (0.560 mi.)***	***I35***	***63***
CHECKER MOTORS CORP WAX AND MI	2016 N PITCHER ST.	S 1/2 - 1 (0.560 mi.)	I36	79

Other Ascertainable Records

RCRA-NonGen: RCRAInfo is EPA's comprehensive information system, providing access to data supporting the Resource Conservation and Recovery Act (RCRA) of 1976 and the Hazardous and Solid Waste Amendments (HSWA) of 1984. The database includes selective information on sites which generate, transport, store, treat and/or dispose of hazardous waste as defined by the Resource Conservation and Recovery Act (RCRA). Non-Generators do not presently generate hazardous waste.

A review of the RCRA-NonGen list, as provided by EDR, and dated 09/10/2008 has revealed that there

are 3 RCRA-NonGen sites within approximately 0.25 miles of the target property.

Equal/Higher Elevation	Address	Direction / Distance	Map ID	Page
MALL CITY CONTAINERS INC	***2710 N PITCHER ST***	***SW 0 - 1/8 (0.033 mi.)***	***A2***	***8***
GREEN BAY PACKAGING INCORPORAT	***2810 N. BURDICK ST.***	***W 1/8 - 1/4 (0.202 mi.)***	***D13***	***26***
WELLSAW INC	2829 N BURDICK ST	W 1/8 - 1/4 (0.203 mi.)	D16	30

BEA: Baseline Environmental Assessment.

A review of the BEA list, as provided by EDR, and dated 12/08/2008 has revealed that there are 8 BEA sites within approximately 0.5 miles of the target property.

Equal/Higher Elevation	Address	Direction / Distance	Map ID	Page
521 E. MOSEL AVENUE	521 E. MOSEL AVENUE	WSW 0 - 1/8 (0.091 mi.)	5	11
BURDICK (2810) STREET N	2810 N. BURDICK STREET	W 1/8 - 1/4 (0.202 mi.)	D14	29
BURDICK (2810) STREET NORTH	2810 NORTH BURDICK STRE	W 1/8 - 1/4 (0.202 mi.)	D15	30
MICRO MACHINE COMPANY	2429 NORTH BURDICK STRE	SW 1/4 - 1/2 (0.297 mi.)	F23	48
ECONOMY PRINTING COMPANY	600 SHOPPERS LANE	ENE 1/4 - 1/2 (0.483 mi.)	28	58
PITCHER (2101) STREET, NORTH (	2101 NORTH PITCHER STRE	S 1/4 - 1/2 (0.495 mi.)	H29	58
2101-2225 N. PITCHER ST	2101-2225 N. PITCHER ST	S 1/4 - 1/2 (0.495 mi.)	H30	59
Not reported	2101-2225 N PITCHER ST	S 1/4 - 1/2 (0.495 mi.)	H33	60

EXECUTIVE SUMMARY

Due to poor or inadequate address information, the following sites were not mapped:

Site Name	Database(s)
KALAMAZOO NO 11 WELLS CITY OF	SHWS
MICHIGAN SITE NETWORK	SHWS, BROWNFIELDS
EATON CORPORATION	SHWS
KALAMAZOO NO 14 WELLS CITY OF	SHWS, DEL SHWS
ALLIED CHEMICAL CORP IND DEV	SHWS
PORTAGE AND SECOND ST AREA KAL	SHWS, DEL SHWS
SUTHERLAND FIELD	HIST LF
KALAMAZOO CHARTER TWP	LUST
ACERMAN OIL	AST
BUTTERNUT BAKERY	AST
BRONSON PROPERTIES CORP	FINDS, RCRA-NonGen
341 AND 357 PITCHER ROAD	BEA
25.45- ACRE PARCEL	BEA

OVERVIEW MAP - 2394830.2s

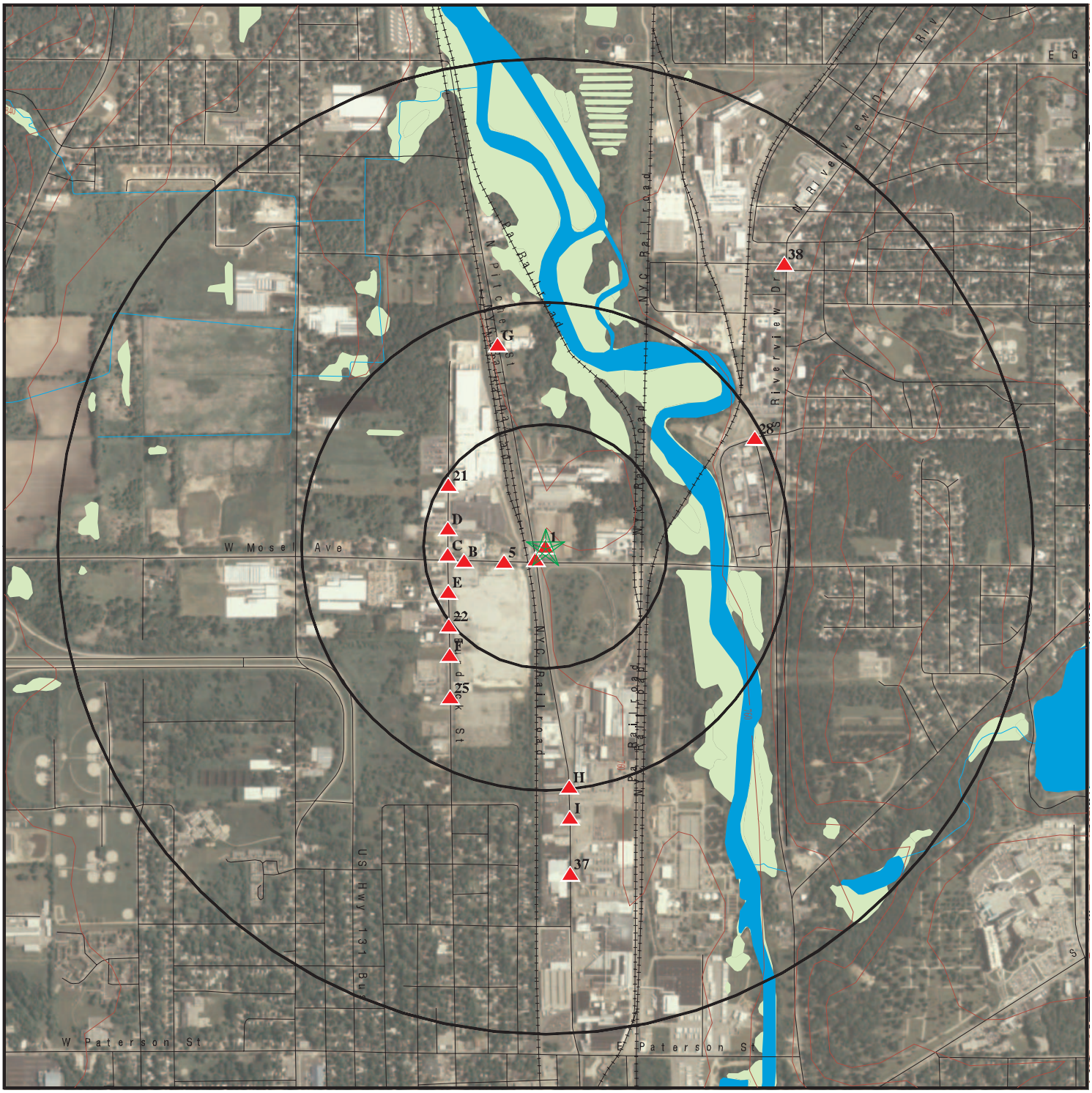

Target Property

Sites at elevations higher than or equal to the target property

Sites at elevations lower than the target property

Manufactured Gas Plants

National Priority List Sites

Dept. Defense Sites

0 1/4 1/2 1 Miles

Indian Reservations BIA

Oil & Gas pipelines

National Wetland Inventory

State Wetlands

This report includes Interactive Map Layers to display and/or hide map information. The legend includes only those icons for the default map view.

SITE NAME: Goodwill Industries ADDRESS: 2700 N. Pitcher St. Kalamazoo MI 49004 LAT/LONG: 42.3184 / 85.5800	CLIENT: Envirologic Technologies, Inc. CONTACT: Erik Peterson INQUIRY #: 2394830.2s DATE: January 07, 2009 5:42 pm

Copyright © 2008 EDR, Inc. © 2008 Tele Atlas Rel. 07/2007.

DETAIL MAP - 2394830.2s

- Target Property
- Sites at elevations higher than or equal to the target property
- Sites at elevations lower than the target property
- Manufactured Gas Plants
- Sensitive Receptors
- National Priority List Sites
- Dept. Defense Sites

0 1/16 1/8 1/4 Miles

- Indian Reservations BIA
- Oil & Gas pipelines
- National Wetland Inventory
- State Wetlands

This report includes Interactive Map Layers to display and/or hide map information. The legend includes only those icons for the default map view.

SITE NAME: Goodwill Industries ADDRESS: 2700 N. Pitcher St. Kalamazoo MI 49004 LAT/LONG: 42.3184 / 85.5800	CLIENT: Envirologic Technologies, Inc. CONTACT: Erik Peterson INQUIRY #: 2394830.2s DATE: January 07, 2009 5:42 pm

Copyright © 2008 EDR, Inc. © 2008 Tele Atlas Rel. 07/2007.

MAP FINDINGS SUMMARY

Database	Target Property	Search Distance (Miles)	< 1/8	1/8 - 1/4	1/4 - 1/2	1/2 - 1	> 1	Total Plotted
STANDARD ENVIRONMENTAL RECORDS								
Federal NPL site list								
NPL		1.000	0	0	0	0	NR	0
Proposed NPL		1.000	0	0	0	0	NR	0
NPL LIENS		TP	NR	NR	NR	NR	NR	0
Federal Delisted NPL site list								
Delisted NPL		1.000	0	0	0	0	NR	0
Federal CERCLIS list								
CERCLIS		0.500	0	0	0	NR	NR	0
Federal CERCLIS NFRAP site List								
CERC-NFRAP		0.500	0	1	1	NR	NR	2
Federal RCRA CORRACTS facilities list								
CORRACTS		1.000	0	0	0	2	NR	2
Federal RCRA non-CORRACTS TSD facilities list								
RCRA-TSDF		0.500	0	0	0	NR	NR	0
Federal RCRA generators list								
RCRA-LQG		0.250	0	0	NR	NR	NR	0
RCRA-SQG		0.250	0	1	NR	NR	NR	1
RCRA-CESQG		0.250	0	2	NR	NR	NR	2
Federal institutional controls / engineering controls registries								
US ENG CONTROLS		0.500	0	0	0	NR	NR	0
US INST CONTROL		0.500	0	0	0	NR	NR	0
Federal ERNS list								
ERNS		TP	NR	NR	NR	NR	NR	0
State- and tribal - equivalent CERCLIS								
SHWS		1.000	0	1	3	3	NR	7
State and tribal landfill and/or solid waste disposal site lists								
SWF/LF		0.500	0	0	0	NR	NR	0
State and tribal leaking storage tank lists								
LUST	X	0.500	1	4	2	NR	NR	7
INDIAN LUST		0.500	0	0	0	NR	NR	0
State and tribal registered storage tank lists								
UST	X	0.250	1	4	NR	NR	NR	5
AST		0.250	0	2	NR	NR	NR	2

MAP FINDINGS SUMMARY

Database	Target Property	Search Distance (Miles)	< 1/8	1/8 - 1/4	1/4 - 1/2	1/2 - 1	> 1	Total Plotted
INDIAN UST		0.250	0	0	NR	NR	NR	0
State and tribal institutional control / engineering control registries								
AUL		0.500	0	0	0	NR	NR	0
State and tribal voluntary cleanup sites								
INDIAN VCP		0.500	0	0	0	NR	NR	0
State and tribal Brownfields sites								
BROWNFIELDS		0.500	0	1	1	NR	NR	2
ADDITIONAL ENVIRONMENTAL RECORDS								
Local Brownfield lists								
US BROWNFIELDS		0.500	0	0	0	NR	NR	0
Local Lists of Landfill / Solid Waste Disposal Sites								
ODI		0.500	0	0	0	NR	NR	0
DEBRIS REGION 9		0.500	0	0	0	NR	NR	0
HIST LF		0.500	0	0	0	NR	NR	0
INDIAN ODI		0.500	0	0	0	NR	NR	0
Local Lists of Hazardous waste / Contaminated Sites								
US CDL		TP	NR	NR	NR	NR	NR	0
DEL SHWS		1.000	1	1	1	2	NR	5
CDL		TP	NR	NR	NR	NR	NR	0
Local Land Records								
LIENS 2		TP	NR	NR	NR	NR	NR	0
LUCIS		0.500	0	0	0	NR	NR	0
LIENS		TP	NR	NR	NR	NR	NR	0
Records of Emergency Release Reports								
HMIRS		TP	NR	NR	NR	NR	NR	0
SPILLS		TP	NR	NR	NR	NR	NR	0
Other Ascertainable Records								
RCRA-NonGen		0.250	1	2	NR	NR	NR	3
DOT OPS		TP	NR	NR	NR	NR	NR	0
DOD		1.000	0	0	0	0	NR	0
FUDS		1.000	0	0	0	0	NR	0
CONSENT		1.000	0	0	0	0	NR	0
ROD		1.000	0	0	0	0	NR	0
UMTRA		0.500	0	0	0	NR	NR	0
MINES		0.250	0	0	NR	NR	NR	0
TRIS		TP	NR	NR	NR	NR	NR	0
TSCA		TP	NR	NR	NR	NR	NR	0

MAP FINDINGS SUMMARY

Database	Target Property	Search Distance (Miles)	< 1/8	1/8 - 1/4	1/4 - 1/2	1/2 - 1	> 1	Total Plotted
FTTS		TP	NR	NR	NR	NR	NR	0
HIST FTTS		TP	NR	NR	NR	NR	NR	0
SSTS		TP	NR	NR	NR	NR	NR	0
ICIS		TP	NR	NR	NR	NR	NR	0
PADS		TP	NR	NR	NR	NR	NR	0
MLTS		TP	NR	NR	NR	NR	NR	0
RADINFO		TP	NR	NR	NR	NR	NR	0
FINDS		TP	NR	NR	NR	NR	NR	0
RAATS		TP	NR	NR	NR	NR	NR	0
DRYCLEANERS		0.250	0	0	NR	NR	NR	0
NPDES		TP	NR	NR	NR	NR	NR	0
AIRS		TP	NR	NR	NR	NR	NR	0
BEA		0.500	1	2	5	NR	NR	8
INDIAN RESERV		1.000	0	0	0	0	NR	0
SCRD DRYCLEANERS		0.500	0	0	0	NR	NR	0
PWS		TP	NR	NR	NR	NR	NR	0
EDR PROPRIETARY RECORDS								
EDR Proprietary Records								
Manufactured Gas Plants		1.000	0	0	0	0	NR	0

NOTES:

TP = Target Property

NR = Not Requested at this Search Distance

Sites may be listed in more than one database

1	**GOODWILL IND. OF S.W. MICHIGAN**	**LUST**	**U000256427**
Target	**2700 N PITCHER ST**	**UST**	**N/A**
Property	**KALAMAZOO, MI 49004**		

Actual: 760 ft.

LUST:

Facility ID:	00003454
Source:	STATE OF MICHIGAN
Owner Name:	Goodwill Ind. Of S.W. Michigan
Owner Address:	2700 N Pitcher St
Owner City,St,Zip:	Kalamazoo, MI 49004-3490
Owner Contact:	Not reported
Owner Phone:	(616) 382-0490
Country:	USA
District:	Kalamazoo District Office
Site Name:	Goodwill Industries
Latitude:	42.3180500000
Longitude:	-85.5801140000
Date of Collection:	01-11-2001
Method of Collection:	Address Matching-House Number
Accuracy:	100
Accuracy Value Unit:	FEET
Horizontal Data:	NAD83
Point Line Area:	POINT
Desc Category:	Plant Entrance (Freight)
Leak Number:	C-0148-07
Release Date:	Jul 19 2007
Substance Released:	Gasoline
Release Status:	Open
Release Closed Date:	Not reported

UST:

Facility ID:	00003454
Facility Type:	CLOSED
Latitude:	42.3180500000
Longitude:	-85.5801140000
Owner Name:	Goodwill Ind. Of S.W. Michigan
Owner Address:	2700 N Pitcher St
Owner City,St,Zip:	Kalamazoo, MI 49004-3490
Owner Country:	USA
Owner Contact:	Not reported
Owner Phone:	(616) 382-0490
Contact:	NORMAN H. FRIEND
Contact Phone:	(616) 382-0490
Date of Collection:	01-11-2001
Accuracy:	100
Accuracy Value Unit:	FEET
Horizontal Datum:	NAD83
Source:	STATE OF MICHIGAN
Point Line Area:	POINT
Desc Category:	Plant Entrance (Freight)
Method of Collection:	Address Matching-House Number
Tank ID:	1
Tank Status:	**Removed from Ground**
Capacity:	5000
Install Date:	May 7 1959
Product:	Gasoline
Remove Date:	Apr 24 1987
Tank Release Detection:	Not reported

GOODWILL IND. OF S.W. MICHIGAN (Continued) **U000256427**

Pipe Realease Detection: Not reported
Piping Material: Unknown
Piping Type: Not reported
Constr Material: Unknown
Impressed Device: No

A2 SW < 1/8 0.033 mi. 173 ft. **MALL CITY CONTAINERS INC** **FINDS** **1000465630**
2710 N PITCHER ST **RCRA-NonGen** **MID985602705**
KALAMAZOO, MI 49004

Site 1 of 3 in cluster A

Relative: Equal

Actual: 760 ft.

FINDS:
Other Pertinent Environmental Activity Identified at Site

TRIS (Toxics Release Inventory System) contains information from facilities on the amounts of over 300 listed toxic chemicals that these facilities release directly to air, water, land, or that are transported off-site.

The NEI (National Emissions Inventory) database contains information on stationary and mobile sources that emit criteria air pollutants and their precursors, as well as hazardous air pollutants (HAPs).

RCRAInfo is a national information system that supports the Resource Conservation and Recovery Act (RCRA) program through the tracking of events and activities related to facilities that generate, transport, and treat, store, or dispose of hazardous waste. RCRAInfo allows RCRA program staff to track the notification, permit, compliance, and corrective action activities required under RCRA.

RCRA-NonGen:
Date form received by agency: 01/02/1991
Facility name: MALL CITY CONTAINERS INC
Facility address: 2710 N PITCHER ST
KALAMAZOO, MI 49004
EPA ID: MID985602705
Contact: BEN BOERSMA
Contact address: 2710 N PITCHER ST
KALAMAZOO, MI 49004
Contact country: Not reported
Contact telephone: (616) 381-2707
Contact email: Not reported
EPA Region: 05
Classification: Non-Generator
Description: Handler: Non-Generators do not presently generate hazardous waste

Owner/Operator Summary:
Owner/operator name: MALL CITY CONTAINERS INC
Owner/operator address: Not reported
Not reported
Owner/operator country: Not reported
Owner/operator telephone: Not reported
Legal status: Private
Owner/Operator Type: Operator
Owner/Op start date: 01/01/1970

MALL CITY CONTAINERS INC (Continued) **1000465630**

Owner/Op end date: Not reported

Owner/operator name: MALL CITY CONTAINERS INC
Owner/operator address: Not reported
Not reported
Owner/operator country: Not reported
Owner/operator telephone: Not reported
Legal status: Private
Owner/Operator Type: Owner
Owner/Op start date: 01/01/1970
Owner/Op end date: Not reported

Handler Activities Summary:
U.S. importer of hazardous waste: No
Mixed waste (haz. and radioactive): No
Recycler of hazardous waste: No
Transporter of hazardous waste: No
Treater, storer or disposer of HW: No
Underground injection activity: No
On-site burner exemption: No
Furnace exemption: No
Used oil fuel burner: No
Used oil processor: No
User oil refiner: No
Used oil fuel marketer to burner: No
Used oil Specification marketer: No
Used oil transfer facility: No
Used oil transporter: No
Off-site waste receiver: Commercial status unknown

Universal Waste Summary:
Waste type: DEVICES CONTAINING ELEMENTAL MERCURY
Accumulated waste on-site: No
Generated waste on-site: No

Waste type: MERCURY THERMOMETERS
Accumulated waste on-site: No
Generated waste on-site: No

Waste type: MERCURY SWITCHES
Accumulated waste on-site: No
Generated waste on-site: No

Waste type: Batteries
Accumulated waste on-site: No
Generated waste on-site: No

Waste type: Lamps
Accumulated waste on-site: No
Generated waste on-site: No

Waste type: Pesticides
Accumulated waste on-site: No
Generated waste on-site: No

Waste type: Thermostats

MALL CITY CONTAINERS INC (Continued) **1000465630**

Accumulated waste on-site: No
Generated waste on-site: No

Violation Status: No violations found

A3
SW
< 1/8
0.033 mi.
173 ft.

MALL CITY CONTAINERS **DEL SHWS** **S106508489**
2710 PITCHER **N/A**
KALAMAZOO, MI 49001

Site 2 of 3 in cluster A

Relative:
Equal

Actual:
760 ft.

DELETED HWS:
Facility ID: 39000247
Status: Delisted - no longer meets criteria specified in rules

---

A4
SW
< 1/8
0.033 mi.
173 ft.

MALL CITY CONTAINERS INC **LUST** **U000256429**
2710 N PITCHER ST **UST** **N/A**
KALAMAZOO, MI 49004

Site 3 of 3 in cluster A

Relative:
Equal

Actual:
760 ft.

LUST:
Facility ID: 00013094
Source: STATE OF MICHIGAN
Owner Name: Mall City Containers Inc
Owner Address: 2710 N Pitcher St
Owner City,St,Zip: Kalamazoo, MI 49004-3490
Owner Contact: Not reported
Owner Phone: (616) 381-2707
Country: USA
District: Kalamazoo District Office
Site Name: Mall City Containers
Latitude: 42.3182110000
Longitude: -85.5801440000
Date of Collection: 01-11-2001
Method of Collection: Address Matching-House Number
Accuracy: 100
Accuracy Value Unit: FEET
Horizontal Data: NAD83
Point Line Area: POINT
Desc Category: Plant Entrance (Freight)

Leak Number: C-0555-90
Release Date: Mar 29 1990
Substance Released: Not reported
Release Status: Closed
Release Closed Date: Sep 23 1999

UST:
Facility ID: 00013094
Facility Type: CLOSED
Latitude: 42.3182110000
Longitude: -85.5801440000
Owner Name: Mall City Containers Inc
Owner Address: 2710 N Pitcher St
Owner City,St,Zip: Kalamazoo, MI 49004-3490
Owner Country: USA
Owner Contact: Not reported

MALL CITY CONTAINERS INC (Continued) **U000256429**

Owner Phone:	(616) 381-2707
Contact:	BENJAMIN BOERSMA
Contact Phone:	(616) 381-2706
Date of Collection:	01-11-2001
Accuracy:	100
Accuracy Value Unit:	FEET
Horizontal Datum:	NAD83
Source:	STATE OF MICHIGAN
Point Line Area:	POINT
Desc Category:	Plant Entrance (Freight)
Method of Collection:	Address Matching-House Number

Tank ID:	1
Tank Status:	**Removed from Ground**
Capacity:	10000
Install Date:	May 9 1971
Product:	Diesel
Remove Date:	Nov 1 1979
Tank Release Detection:	Not reported
Pipe Realease Detection:	Not reported
Piping Material:	Unknown
Piping Type:	Not reported
Constr Material:	Unknown
Impressed Device:	No

---

5 WSW < 1/8 0.091 mi. 479 ft. | **521 E. MOSEL AVENUE**
521 E. MOSEL AVENUE
KALAMAZOO, MI 49004 | **BEA** | **S106425606**
N/A

Relative: Higher

Actual: 761 ft.

BEA:

Secondary Address:	Not reported
BEA Number:	755
District:	Kalamazoo
Date Received:	6/8/2004 12:59:00 AM
Submitter Name:	Burdick Street Properties, LLC
Petition Determination:	No Request
Petition Disclosure:	0
Category:	No Hazardous Substance(s)
Determination 20107A:	No Request
Reviewer:	weaverc1
Division Assigned:	Environmental Response Division

B6 West 1/8-1/4 0.169 mi. 895 ft. | **FORMER EATON CORPORATION**
222 EAST MOSEL AVENUE
KALAMAZOO TOWNSHIP, MI | **BROWNFIELDS** | **S107135940**
N/A

Site 1 of 3 in cluster B

Relative: Higher

Actual: 762 ft.

BROWNFIELD:

Facility ID:	Not reported
Region:	1
Status:	PLP
Properry Use:	Not reported
BEA:	No

FORMER EATON CORPORATION (Continued) **S107135940**

Ernie Id Number: 39000429
Redevelop Status: Not reported
Before Redevelopment: Not reported
After Redevelopment: Not reported

B7 **EATON CORPORATION** **LUST** **S105220325**
West **222 E MOSEL AVE** **N/A**
1/8-1/4 **KALAMAZOO, MI 49004**
0.170 mi.
895 ft. **Site 2 of 3 in cluster B**

Relative:
Higher

Actual:
762 ft.

LUST:
Facility ID: 00038824
Source: STATE OF MICHIGAN
Owner Name: Eaton Corporation (NAFSC)
Owner Address: Po Box 818026 1111 Superior Ave (Eaton Center)
Owner City,St,Zip: Cleveland, OH 44181-8031
Owner Contact: Rhonda Miller
Owner Phone: 888-402-1587
Country: USA
District: Kalamazoo District Office
Site Name: Eaton Manufacturing
Latitude: 42.3149050000
Longitude: -85.5831580000
Date of Collection: 16-10-2001
Method of Collection: GPS Code Meas. Standard Positioning Service SA Off
Accuracy: 10
Accuracy Value Unit: METERS
Horizontal Data: NAD83
Point Line Area: POINT
Desc Category: Plant Entrance (Freight)

Leak Number: C-0388-02
Release Date: Jul 2 2002
Substance Released: Unknown,Unknown,Unknown
Release Status: Open
Release Closed Date: Not reported

Leak Number: C-1318-01
Release Date: Oct 22 2001
Substance Released: Diesel,Diesel
Release Status: Open
Release Closed Date: Not reported

Leak Number: C-1330-01
Release Date: Oct 23 2001
Substance Released: Other,Other,Other,Other,Unknown,Unknown,Other
Release Status: Open
Release Closed Date: Not reported

Leak Number: C-1331-01
Release Date: Oct 24 2001
Substance Released: Other
Release Status: Open
Release Closed Date: Not reported

Leak Number: C-1344-01
Release Date: Oct 25 2001

EATON CORPORATION (Continued) **S105220325**

Substance Released: Diesel
Release Status: Open
Release Closed Date: Not reported

B8 **EATON CORPORATION** **UST** **U003866178**
West **222 E MOSEL AVE** **N/A**
1/8-1/4 **KALAMAZOO, MI 49004**
0.170 mi.
895 ft. **Site 3 of 3 in cluster B**

Relative:
Higher

Actual:
762 ft.

UST:

Facility ID:	00038824
Facility Type:	CLOSED
Latitude:	42.3149050000
Longitude:	-85.5831580000
Owner Name:	Eaton Corporation (NAFSC)
Owner Address:	Po Box 818026 1111 Superior Ave (Eaton Center)
Owner City,St,Zip:	Cleveland, OH 44181-8031
Owner Country:	USA
Owner Contact:	Rhonda Miller
Owner Phone:	888-402-1587
Contact:	Rhonda Miller
Contact Phone:	Not reported
Date of Collection:	16-10-2001
Accuracy:	10
Accuracy Value Unit:	METERS
Horizontal Datum:	NAD83
Source:	STATE OF MICHIGAN
Point Line Area:	POINT
Desc Category:	Plant Entrance (Freight)
Method of Collection:	GPS Code Meas. Standard Positioning Service SA Off

Tank ID:	1
Tank Status:	**Removed from Ground**
Capacity:	8000
Install Date:	Jan 1 1972
Product:	Diesel
Remove Date:	Sep 22 2001
Tank Release Detection:	Not reported
Pipe Realease Detection:	Not reported
Piping Material:	Unknown
Piping Type:	Not reported
Constr Material:	Fiberglass Reinforced plastic,Unknown
Impressed Device:	No

Tank ID:	2
Tank Status:	**Removed from Ground**
Capacity:	1500
Install Date:	Jan 1 1972
Product:	Diesel
Remove Date:	Oct 23 2001
Tank Release Detection:	Not reported
Pipe Realease Detection:	Not reported
Piping Material:	Unknown
Piping Type:	Not reported
Constr Material:	Fiberglass Reinforced plastic,Unknown
Impressed Device:	No

EATON CORPORATION (Continued) **U003866178**

Tank ID: 3
Tank Status: Removed from Ground
Capacity: 8000
Install Date: Jan 1 1964
Product: hydraulic oil
Remove Date: Oct 23 2001
Tank Release Detection: Not reported
Pipe Realease Detection: Not reported
Piping Material: Unknown
Piping Type: Not reported
Constr Material: Asphalt Coated or Bare Steel,Unknown
Impressed Device: No

Tank ID: 4
Tank Status: Removed from Ground
Capacity: 8000
Install Date: Jan 1 1964
Product: hydraulic oil
Remove Date: Oct 23 2001
Tank Release Detection: Not reported
Pipe Realease Detection: Not reported
Piping Material: Unknown
Piping Type: Not reported
Constr Material: Asphalt Coated or Bare Steel,Unknown
Impressed Device: No

Tank ID: 5
Tank Status: Removed from Ground
Capacity: 8000
Install Date: Jan 1 1964
Product: hydraulic oil
Remove Date: Oct 23 2001
Tank Release Detection: Not reported
Pipe Realease Detection: Not reported
Piping Material: Unknown
Piping Type: Not reported
Constr Material: Asphalt Coated or Bare Steel,Unknown
Impressed Device: No

Tank ID: 6
Tank Status: Removed from Ground
Capacity: 8000
Install Date: Jan 1 1964
Product: hydraulic oil
Remove Date: Oct 23 2001
Tank Release Detection: Not reported
Pipe Realease Detection: Not reported
Piping Material: Unknown
Piping Type: Not reported
Constr Material: Asphalt Coated or Bare Steel,Unknown
Impressed Device: No

Tank ID: 7

EATON CORPORATION (Continued) **U003866178**

Tank Status:	**Removed from Ground**
Capacity:	8000
Install Date:	Jan 1 1964
Product:	hydraulic oil
Remove Date:	Oct 24 2001
Tank Release Detection:	Not reported
Pipe Realease Detection:	Not reported
Piping Material:	Unknown
Piping Type:	Not reported
Constr Material:	Asphalt Coated or Bare Steel,Unknown
Impressed Device:	No

Tank ID:	8
Tank Status:	**Removed from Ground**
Capacity:	8000
Install Date:	Jan 1 1964
Product:	rust inhibitor
Remove Date:	Oct 24 2001
Tank Release Detection:	Not reported
Pipe Realease Detection:	Not reported
Piping Material:	Unknown
Piping Type:	Not reported
Constr Material:	Asphalt Coated or Bare Steel,Unknown
Impressed Device:	No

Tank ID:	9
Tank Status:	**Removed from Ground**
Capacity:	8000
Install Date:	Jan 1 1964
Product:	cutting oil
Remove Date:	Oct 24 2001
Tank Release Detection:	Not reported
Pipe Realease Detection:	Not reported
Piping Material:	Unknown
Piping Type:	Not reported
Constr Material:	Asphalt Coated or Bare Steel,Unknown
Impressed Device:	No

Tank ID:	10
Tank Status:	**Removed from Ground**
Capacity:	8000
Install Date:	Jan 1 1964
Product:	CUTTING OIL
Remove Date:	Oct 24 2001
Tank Release Detection:	Not reported
Pipe Realease Detection:	Not reported
Piping Material:	Unknown
Piping Type:	Not reported
Constr Material:	Asphalt Coated or Bare Steel,Unknown
Impressed Device:	No

Tank ID:	11
Tank Status:	**Removed from Ground**

EATON CORPORATION (Continued) **U003866178**

Capacity: 1000
Install Date: Jan 1 1956
Product: Diesel
Remove Date: Oct 24 2001
Tank Release Detection: Not reported
Pipe Realease Detection: Not reported
Piping Material: Unknown
Piping Type: Not reported
Constr Material: Asphalt Coated or Bare Steel,Unknown
Impressed Device: No

Tank ID: 12
Tank Status: Removed from Ground
Capacity: 6000
Install Date: Jan 1 1956
Product: #6 FUEL/OIL
Remove Date: Oct 31 2001
Tank Release Detection: Not reported
Pipe Realease Detection: Not reported
Piping Material: Unknown
Piping Type: Not reported
Constr Material: Asphalt Coated or Bare Steel,Unknown
Impressed Device: No

Tank ID: 13
Tank Status: Removed from Ground
Capacity: 10000
Install Date: Jan 1 1956
Product: QUENCH/OIL
Remove Date: Oct 25 2001
Tank Release Detection: Not reported
Pipe Realease Detection: Not reported
Piping Material: Unknown
Piping Type: Not reported
Constr Material: Asphalt Coated or Bare Steel,Unknown
Impressed Device: No

Tank ID: 14
Tank Status: Removed from Ground
Capacity: 10000
Install Date: Jan 1 1952
Product: QUENCH/OIL
Remove Date: Jun 4 2002
Tank Release Detection: Not reported
Pipe Realease Detection: Not reported
Piping Material: Unknown
Piping Type: Not reported
Constr Material: Asphalt Coated or Bare Steel,Unknown
Impressed Device: No

Tank ID: 15
Tank Status: Removed from Ground
Capacity: 4000

EATON CORPORATION (Continued) **U003866178**

Install Date: Jan 1 1986
Product: quench oil
Remove Date: Jun 6 2002
Tank Release Detection: Not reported
Pipe Realease Detection: Not reported
Piping Material: Unknown
Piping Type: Not reported
Constr Material: Asphalt Coated or Bare Steel
Impressed Device: No

Tank ID: 16
Tank Status: Removed from Ground
Capacity: 3000
Install Date: Jan 1 1986
Product: quench oil
Remove Date: Jun 6 2002
Tank Release Detection: Not reported
Pipe Realease Detection: Not reported
Piping Material: Unknown
Piping Type: Not reported
Constr Material: Asphalt Coated or Bare Steel
Impressed Device: No

C9 **HAVILAND PRODUCTS COMPANY** **AST** **1005430430**
West **2722 N BURDICK ST** **SSTS** **N/A**
1/8-1/4 **KALAMAZOO, MI 49007**
0.201 mi.
1063 ft. **Site 1 of 3 in cluster C**

Relative:
Higher

Actual:
763 ft.

AST:
Type: ACTIVE
Owner Name: Haviland Products Co
Owner Address: 421 Ann St NW
Owner City,St,Zip: Grand Rapids, MI 49504-2019
Owner County: USA
Owner Contact: Not reported
Owner Telephone: (616) 361-6691
Facility ID: 91039029
District: Kalamazoo District Office
Contact: BRIAN BANNAN
Facility Phone: (616) 382-1845
Tank ID: 1
Tank Status: Currently In Use
Capacity: 8000
Install Date: Jan 1 1981
Content: Flammable Liquid
Close Date: Not reported

Type: ACTIVE
Owner Name: Haviland Products Co
Owner Address: 421 Ann St NW
Owner City,St,Zip: Grand Rapids, MI 49504-2019
Owner County: USA
Owner Contact: Not reported
Owner Telephone: (616) 361-6691
Facility ID: 91039029
District: Kalamazoo District Office

HAVILAND PRODUCTS COMPANY (Continued) **1005430430**

Contact: BRIAN BANNAN
Facility Phone: (616) 382-1845
Tank ID: 2
Tank Status: Currently In Use
Capacity: 8000
Install Date: Jan 1 1981
Content: Flammable Liquid
Close Date: Not reported

Type: ACTIVE
Owner Name: Haviland Products Co
Owner Address: 421 Ann St NW
Owner City,St,Zip: Grand Rapids, MI 49504-2019
Owner County: USA
Owner Contact: Not reported
Owner Telephone: (616) 361-6691
Facility ID: 91039029
District: Kalamazoo District Office
Contact: BRIAN BANNAN
Facility Phone: (616) 382-1845
Tank ID: 3
Tank Status: Currently In Use
Capacity: 8000
Install Date: Jan 1 1981
Content: Flammable Liquid
Close Date: Not reported

Type: ACTIVE
Owner Name: Haviland Products Co
Owner Address: 421 Ann St NW
Owner City,St,Zip: Grand Rapids, MI 49504-2019
Owner County: USA
Owner Contact: Not reported
Owner Telephone: (616) 361-6691
Facility ID: 91039029
District: Kalamazoo District Office
Contact: BRIAN BANNAN
Facility Phone: (616) 382-1845
Tank ID: 4
Tank Status: Currently In Use
Capacity: 8000
Install Date: Jan 1 1981
Content: Flammable Liquid
Close Date: Not reported

Type: ACTIVE
Owner Name: Haviland Products Co
Owner Address: 421 Ann St NW
Owner City,St,Zip: Grand Rapids, MI 49504-2019
Owner County: USA
Owner Contact: Not reported
Owner Telephone: (616) 361-6691
Facility ID: 91039029
District: Kalamazoo District Office
Contact: BRIAN BANNAN
Facility Phone: (616) 382-1845
Tank ID: 5

HAVILAND PRODUCTS COMPANY (Continued) **1005430430**

Tank Status: Currently In Use
Capacity: 8000
Install Date: Jan 1 1981
Content: Flammable Liquid
Close Date: Not reported

Type: ACTIVE
Owner Name: Haviland Products Co
Owner Address: 421 Ann St NW
Owner City,St,Zip: Grand Rapids, MI 49504-2019
Owner County: USA
Owner Contact: Not reported
Owner Telephone: (616) 361-6691
Facility ID: 91039029
District: Kalamazoo District Office
Contact: BRIAN BANNAN
Facility Phone: (616) 382-1845
Tank ID: 6
Tank Status: Currently In Use
Capacity: 8000
Install Date: Jan 1 1981
Content: Flammable Liquid
Close Date: Not reported

Type: ACTIVE
Owner Name: Haviland Products Co
Owner Address: 421 Ann St NW
Owner City,St,Zip: Grand Rapids, MI 49504-2019
Owner County: USA
Owner Contact: Not reported
Owner Telephone: (616) 361-6691
Facility ID: 91039029
District: Kalamazoo District Office
Contact: BRIAN BANNAN
Facility Phone: (616) 382-1845
Tank ID: 7
Tank Status: Currently In Use
Capacity: 8000
Install Date: Jan 1 1981
Content: Flammable Liquid
Close Date: Not reported

Type: ACTIVE
Owner Name: Haviland Products Co
Owner Address: 421 Ann St NW
Owner City,St,Zip: Grand Rapids, MI 49504-2019
Owner County: USA
Owner Contact: Not reported
Owner Telephone: (616) 361-6691
Facility ID: 91039029
District: Kalamazoo District Office
Contact: BRIAN BANNAN
Facility Phone: (616) 382-1845
Tank ID: 8
Tank Status: Currently In Use
Capacity: 8000
Install Date: Jan 1 1981

HAVILAND PRODUCTS COMPANY (Continued) **1005430430**

Content: Flammable Liquid
Close Date: Not reported

SSTS:

Product: LIQUICHLOR BLEACH
Status: Active
Registration Number: 010183MI 003
Report Year: 1990
Permit: Registered
Product Number: 05778700004
Product Type: End-use blend, formulation, or concentrate
Product Class: Disinfectant, germicide, sanitizer
Product Use: All other products
UOM: Not reported
Market: Marketed in the United States
Region: Not reported

Product: LIQUICHLOR
Status: Active
Registration Number: 010183MI 003
Report Year: 1991
Permit: Registered
Product Number: 05778700004
Product Type: Repackaged or relabeled
Product Class: Disinfectant, germicide, sanitizer
Product Use: All other products
UOM: Not reported
Market: Marketed in the United States
Region: Not reported

Product: LIQUICHLOR
Status: Active
Registration Number: 010183MI 003
Report Year: 1992
Permit: Registered
Product Number: 05778700004
Product Type: Repackaged or relabeled
Product Class: Disinfectant, germicide, sanitizer
Product Use: All other products
UOM: Not reported
Market: Marketed in the United States
Region: Not reported

C10 **HAVILAND PROD CO** **FINDS** **1000464936**
West **2722 N BURDICK ST** **RCRA-CESQG** **MID017171745**
1/8-1/4 **KALAMAZOO, MI 49007**
0.201 mi.
1063 ft. **Site 2 of 3 in cluster C**

Relative:
Higher

Actual:
763 ft.

FINDS:
Other Pertinent Environmental Activity Identified at Site

NCDB (National Compliance Data Base) supports implementation of the Federal Insecticide, Fungicide, and Rodenticide Act (FIFRA) and the Toxic Substances Control Act (TSCA). The system tracks inspections in regions and states with cooperative agreements, enforcement actions, and settlements.

HAVILAND PROD CO (Continued) **1000464936**

RCRAInfo is a national information system that supports the Resource Conservation and Recovery Act (RCRA) program through the tracking of events and activities related to facilities that generate, transport, and treat, store, or dispose of hazardous waste. RCRAInfo allows RCRA program staff to track the notification, permit, compliance, and corrective action activities required under RCRA.

RCRA-CESQG:

Date form received by agency:	03/28/1994
Facility name:	HAVILAND PROD CO
Facility address:	2722 N BURDICK ST KALAMAZOO, MI 49007
EPA ID:	MID017171745
Mailing address:	PO BOX 126 PARCHMENT, MI 49007
Contact:	DONALD RYAN
Contact address:	2722 N BURDICK ST KALAMAZOO, MI 49007
Contact country:	Not reported
Contact telephone:	(616) 361-6691
Contact email:	Not reported
EPA Region:	05
Land type:	Private
Classification:	Conditionally Exempt Small Quantity Generator
Description:	Handler: generates 100 kg or less of hazardous waste per calendar month, and accumulates 1000 kg or less of hazardous waste at any time; or generates 1 kg or less of acutely hazardous waste per calendar month, and accumulates at any time: 1 kg or less of acutely hazardous waste; or 100 kg or less of any residue or contaminated soil, waste or other debris resulting from the cleanup of a spill, into or on any land or water, of acutely hazardous waste; or generates 100 kg or less of any residue or contaminated soil, waste or other debris resulting from the cleanup of a spill, into or on any land or water, of acutely hazardous waste during any calendar month, and accumulates at any time: 1 kg or less of acutely hazardous waste; or 100 kg or less of any residue or contaminated soil, waste or other debris resulting from the cleanup of a spill, into or on any land or water, of acutely hazardous waste

Owner/Operator Summary:

Owner/operator name:	HAVILAND ENTERPRISES
Owner/operator address:	Not reported Not reported
Owner/operator country:	Not reported
Owner/operator telephone:	Not reported
Legal status:	Private
Owner/Operator Type:	Operator
Owner/Op start date:	01/01/1970
Owner/Op end date:	Not reported

Owner/operator name:	HAVILAND ENTERPRISES
Owner/operator address:	Not reported Not reported
Owner/operator country:	Not reported
Owner/operator telephone:	Not reported

HAVILAND PROD CO (Continued) **1000464936**

Legal status: Private
Owner/Operator Type: Owner
Owner/Op start date: 01/01/1970
Owner/Op end date: Not reported

Handler Activities Summary:
U.S. importer of hazardous waste: No
Mixed waste (haz. and radioactive): No
Recycler of hazardous waste: No
Transporter of hazardous waste: No
Treater, storer or disposer of HW: No
Underground injection activity: No
On-site burner exemption: No
Furnace exemption: No
Used oil fuel burner: No
Used oil processor: No
User oil refiner: No
Used oil fuel marketer to burner: No
Used oil Specification marketer: No
Used oil transfer facility: No
Used oil transporter: No
Off-site waste receiver: Commercial status unknown

Universal Waste Summary:
Waste type: DEVICES CONTAINING ELEMENTAL MERCURY
Accumulated waste on-site: No
Generated waste on-site: No

Waste type: MERCURY THERMOMETERS
Accumulated waste on-site: No
Generated waste on-site: No

Waste type: MERCURY SWITCHES
Accumulated waste on-site: No
Generated waste on-site: No

Waste type: Batteries
Accumulated waste on-site: No
Generated waste on-site: No

Waste type: Lamps
Accumulated waste on-site: No
Generated waste on-site: No

Waste type: Pesticides
Accumulated waste on-site: No
Generated waste on-site: No

Waste type: Thermostats
Accumulated waste on-site: No
Generated waste on-site: No

Historical Generators:
Date form received by agency: 10/24/1990
Facility name: HAVILAND PROD CO
Classification: Conditionally Exempt Small Quantity Generator

HAVILAND PROD CO (Continued) **1000464936**

Facility Has Received Notices of Violations:

Regulation violated:	Not reported
Area of violation:	Generators - Pre-transport
Date violation determined:	09/03/1996
Date achieved compliance:	10/11/1996
Violation lead agency:	State
Enforcement action:	WRITTEN INFORMAL
Enforcement action date:	09/03/1996
Enf. disposition status:	Not reported
Enf. disp. status date:	Not reported
Enforcement lead agency:	State
Proposed penalty amount:	Not reported
Final penalty amount:	Not reported
Paid penalty amount:	Not reported

Regulation violated:	Not reported
Area of violation:	LDR - General
Date violation determined:	09/03/1996
Date achieved compliance:	10/11/1996
Violation lead agency:	State
Enforcement action:	WRITTEN INFORMAL
Enforcement action date:	09/03/1996
Enf. disposition status:	Not reported
Enf. disp. status date:	Not reported
Enforcement lead agency:	State
Proposed penalty amount:	Not reported
Final penalty amount:	Not reported
Paid penalty amount:	Not reported

Regulation violated:	Not reported
Area of violation:	Generators - Manifest
Date violation determined:	09/03/1996
Date achieved compliance:	10/11/1996
Violation lead agency:	State
Enforcement action:	WRITTEN INFORMAL
Enforcement action date:	09/03/1996
Enf. disposition status:	Not reported
Enf. disp. status date:	Not reported
Enforcement lead agency:	State
Proposed penalty amount:	Not reported
Final penalty amount:	Not reported
Paid penalty amount:	Not reported

Evaluation Action Summary:

Evaluation date:	08/27/1996
Evaluation:	COMPLIANCE EVALUATION INSPECTION ON-SITE
Area of violation:	LDR - General
Date achieved compliance:	10/11/1996
Evaluation lead agency:	State

Evaluation date:	08/27/1996
Evaluation:	COMPLIANCE EVALUATION INSPECTION ON-SITE
Area of violation:	Generators - Manifest
Date achieved compliance:	10/11/1996
Evaluation lead agency:	State

HAVILAND PROD CO (Continued) **1000464936**

Evaluation date:	08/27/1996
Evaluation:	COMPLIANCE EVALUATION INSPECTION ON-SITE
Area of violation:	Generators - Pre-transport
Date achieved compliance:	10/11/1996
Evaluation lead agency:	State

C11 West 1/8-1/4 0.201 mi. 1063 ft. **HAVILAND PRODUCTS CO** **LUST** **U003866723**
2722 N BURDICK ST **UST** **N/A**
KALAMAZOO, MI 49004

Site 3 of 3 in cluster C

Relative: Higher

Actual: 763 ft.

LUST:

Facility ID:	00007314
Source:	STATE OF MICHIGAN
Owner Name:	Haviland Products Co
Owner Address:	421 Ann St NW
Owner City,St,Zip:	Grand Rapids, MI 49504-2019
Owner Contact:	Not reported
Owner Phone:	(616) 361-6691
Country:	USA
District:	Kalamazoo District Office
Site Name:	Haviland Products
Latitude:	42.3182840000
Longitude:	-85.5836520000
Date of Collection:	01-11-2001
Method of Collection:	Address Matching-House Number
Accuracy:	100
Accuracy Value Unit:	FEET
Horizontal Data:	NAD83
Point Line Area:	POINT
Desc Category:	Plant Entrance (Freight)
Leak Number:	C-1556-90
Release Date:	Aug 17 1990
Substance Released:	Not reported
Release Status:	Closed
Release Closed Date:	May 31 1991

UST:

Facility ID:	00007314
Facility Type:	CLOSED
Latitude:	42.3182840000
Longitude:	-85.5836520000
Owner Name:	Haviland Products Co
Owner Address:	421 Ann St NW
Owner City,St,Zip:	Grand Rapids, MI 49504-2019
Owner Country:	USA
Owner Contact:	Not reported
Owner Phone:	(616) 361-6691
Contact:	BOB MASTBERGEN
Contact Phone:	(616) 361-6691
Date of Collection:	01-11-2001
Accuracy:	100
Accuracy Value Unit:	FEET
Horizontal Datum:	NAD83
Source:	STATE OF MICHIGAN
Point Line Area:	POINT
Desc Category:	Plant Entrance (Freight)

HAVILAND PRODUCTS CO (Continued) **U003866723**

Method of Collection: Address Matching-House Number

Tank ID: 1
Tank Status: Removed from Ground
Capacity: 10000
Install Date: Mar 10 1982
Product: Diesel
Remove Date: Aug 17 1990
Tank Release Detection: Not reported
Pipe Realease Detection: Not reported
Piping Material: Bare Steel
Piping Type: Suction: No Valve At Tank
Constr Material: Asphalt Coated or Bare Steel
Impressed Device: No

D12
West
1/8-1/4
0.202 mi.
1066 ft.

Relative:
Higher

Actual:
763 ft.

KALAMAZOO DIVISION **UST** **U000256434**
2810 N BURDICK ST **N/A**
KALAMAZOO, MI 49004

Site 1 of 5 in cluster D

UST:
Facility ID: 00014860
Facility Type: CLOSED
Latitude: 42.3190080000
Longitude: -85.5836490000
Owner Name: Green Bay Packaging Inc
Owner Address: PO Box 3307
Owner City,St,Zip: Kalamazoo, MI 49003-3307
Owner Country: USA
Owner Contact: Not reported
Owner Phone: (616) 552-1000
Contact: SCOTT NUGTEREN
Contact Phone: (616) 552-1000
Date of Collection: 01-11-2001
Accuracy: 100
Accuracy Value Unit: FEET
Horizontal Datum: NAD83
Source: STATE OF MICHIGAN
Point Line Area: POINT
Desc Category: Plant Entrance (Freight)
Method of Collection: Address Matching-House Number

Tank ID: 3
Tank Status: Removed from Ground
Capacity: 20000
Install Date: Mar 13 1977
Product: BOILER FUEL
Remove Date: Aug 31 1987
Tank Release Detection: Not reported
Pipe Realease Detection: Not reported
Piping Material: Bare Steel
Piping Type: Not reported
Constr Material: Asphalt Coated or Bare Steel
Impressed Device: No

Tank ID: 4

KALAMAZOO DIVISION (Continued) **U000256434**

Tank Status:	**Removed from Ground**
Capacity:	10000
Install Date:	Oct 1 1987
Product:	Diesel
Remove Date:	Nov 3 1998
Tank Release Detection:	Not reported
Pipe Realease Detection:	Not reported
Piping Material:	Double Walled,Galvanized Steel,Secondary Containment
Piping Type:	Suction: Valve at Tank
Constr Material:	Double Walled,Fiberglass Reinforced plastic
Impressed Device:	No

Tank ID:	14140256
Tank Status:	**Removed from Ground**
Capacity:	10000
Install Date:	Mar 14 1971
Product:	Diesel
Remove Date:	Aug 31 1987
Tank Release Detection:	Not reported
Pipe Realease Detection:	Not reported
Piping Material:	Bare Steel
Piping Type:	Not reported
Constr Material:	Asphalt Coated or Bare Steel
Impressed Device:	No

Tank ID:	14140339
Tank Status:	**Removed from Ground**
Capacity:	10000
Install Date:	Mar 13 1974
Product:	Gasoline
Remove Date:	Oct 31 1986
Tank Release Detection:	Not reported
Pipe Realease Detection:	Not reported
Piping Material:	Bare Steel
Piping Type:	Not reported
Constr Material:	Asphalt Coated or Bare Steel
Impressed Device:	No

D13 **GREEN BAY PACKAGING INCORPORATED** **FINDS** **1000206228**
West **2810 N. BURDICK ST.** **RCRA-NonGen** **MID005361159**
1/8-1/4 **KALAMAZOO, MI 49005**
0.202 mi.
1066 ft. **Site 2 of 5 in cluster D**

Relative:
Higher

FINDS:
Other Pertinent Environmental Activity Identified at Site

Actual:
763 ft.

TRIS (Toxics Release Inventory System) contains information from facilities on the amounts of over 300 listed toxic chemicals that these facilities release directly to air, water, land, or that are transported off-site.

RCRAInfo is a national information system that supports the Resource Conservation and Recovery Act (RCRA) program through the tracking of events and activities related to facilities that generate, transport, and treat, store, or dispose of hazardous waste. RCRAInfo allows RCRA

GREEN BAY PACKAGING INCORPORATED (Continued) **1000206228**

program staff to track the notification, permit, compliance, and corrective action activities required under RCRA.

RCRA-NonGen:

Date form received by agency:	01/10/2001
Facility name:	GREEN BAY PACKAGING INC
Facility address:	2810 N BURDICK ST KALAMAZOO, MI 49005
EPA ID:	MID005361159
Mailing address:	PO BOX 3007 KALAMAZOO, MI 49003
Contact:	SCOTT NUGTERN
Contact address:	2810 N BURDICK ST KALAMAZOO, MI 49005
Contact country:	Not reported
Contact telephone:	(616) 552-1000
Contact email:	Not reported
EPA Region:	05
Land type:	Other land type
Classification:	Non-Generator
Description:	Handler: Non-Generators do not presently generate hazardous waste

Owner/Operator Summary:

Owner/operator name:	NO ACTIVE O/OP AS NOT GENERATING WASTE
Owner/operator address:	Not reported Not reported
Owner/operator country:	Not reported
Owner/operator telephone:	Not reported
Legal status:	Private
Owner/Operator Type:	Operator
Owner/Op start date:	01/11/2001
Owner/Op end date:	Not reported

Owner/operator name:	NO ACTIVE O/OP AS NOT GENERATING WASTE
Owner/operator address:	Not reported Not reported
Owner/operator country:	Not reported
Owner/operator telephone:	Not reported
Legal status:	Private
Owner/Operator Type:	Owner
Owner/Op start date:	01/11/2001
Owner/Op end date:	Not reported

Handler Activities Summary:

U.S. importer of hazardous waste:	No
Mixed waste (haz. and radioactive):	No
Recycler of hazardous waste:	No
Transporter of hazardous waste:	No
Treater, storer or disposer of HW:	No
Underground injection activity:	No
On-site burner exemption:	No
Furnace exemption:	No
Used oil fuel burner:	No
Used oil processor:	No
User oil refiner:	No

GREEN BAY PACKAGING INCORPORATED (Continued) **1000206228**

Used oil fuel marketer to burner: No
Used oil Specification marketer: No
Used oil transfer facility: No
Used oil transporter: No
Off-site waste receiver: Commercial status unknown

Universal Waste Summary:
Waste type: DEVICES CONTAINING ELEMENTAL MERCURY
Accumulated waste on-site: No
Generated waste on-site: No

Waste type: MERCURY THERMOMETERS
Accumulated waste on-site: No
Generated waste on-site: No

Waste type: MERCURY SWITCHES
Accumulated waste on-site: No
Generated waste on-site: No

Waste type: Batteries
Accumulated waste on-site: No
Generated waste on-site: No

Waste type: Lamps
Accumulated waste on-site: No
Generated waste on-site: No

Waste type: Pesticides
Accumulated waste on-site: No
Generated waste on-site: No

Waste type: Thermostats
Accumulated waste on-site: No
Generated waste on-site: No

Historical Generators:
Date form received by agency: 05/30/1996
Facility name: GREEN BAY PACKAGING INC
Classification: Not a generator, verified

Date form received by agency: 08/11/1980
Facility name: GREEN BAY PACKAGING INC
Classification: Not a generator, verified

Facility Has Received Notices of Violations:
Regulation violated: Not reported
Area of violation: LDR - General
Date violation determined: 05/24/1996
Date achieved compliance: 06/11/1996
Violation lead agency: State
Enforcement action: WRITTEN INFORMAL
Enforcement action date: 05/24/1996
Enf. disposition status: Not reported
Enf. disp. status date: Not reported
Enforcement lead agency: State
Proposed penalty amount: Not reported

GREEN BAY PACKAGING INCORPORATED (Continued) **1000206228**

Final penalty amount: Not reported
Paid penalty amount: Not reported

Regulation violated: Not reported
Area of violation: Generators - Records/Reporting
Date violation determined: 05/24/1996
Date achieved compliance: 06/11/1996
Violation lead agency: State
Enforcement action: WRITTEN INFORMAL
Enforcement action date: 05/24/1996
Enf. disposition status: Not reported
Enf. disp. status date: Not reported
Enforcement lead agency: State
Proposed penalty amount: Not reported
Final penalty amount: Not reported
Paid penalty amount: Not reported

Evaluation Action Summary:
Evaluation date: 05/20/1996
Evaluation: COMPLIANCE EVALUATION INSPECTION ON-SITE
Area of violation: LDR - General
Date achieved compliance: 06/11/1996
Evaluation lead agency: State

Evaluation date: 05/20/1996
Evaluation: COMPLIANCE EVALUATION INSPECTION ON-SITE
Area of violation: Generators - Records/Reporting
Date achieved compliance: 06/11/1996
Evaluation lead agency: State

D14 **BURDICK (2810) STREET N** **BEA** **S108084312**
West **2810 N. BURDICK STREET** **N/A**
1/8-1/4 **KALAMAZOO, MI**
0.202 mi.
1066 ft. **Site 3 of 5 in cluster D**

Relative:
Higher

Actual:
763 ft.

BEA:
Secondary Address: Not reported
BEA Number: 362
District: Kalamazoo
Date Received: 4/20/2000
Submitter Name: The Trinity Group, Ltd
Petition Determination: Affirmed
Petition Disclosure: 1
Category: Different Hazardous Substance(s)
Determination 20107A: No Request
Reviewer: weaverc1
Division Assigned: Environmental Response Division

D15 West 1/8-1/4 0.202 mi. 1066 ft. | **BURDICK (2810) STREET NORTH** | **BEA** | **S108084313**
2810 NORTH BURDICK STREET | **N/A**
KALAMAZOO, MI

Site 4 of 5 in cluster D

Relative: Higher

Actual: 763 ft.

BEA:

Secondary Address:	Not reported
BEA Number:	363
District:	Kalamazoo
Date Received:	4/20/2000
Submitter Name:	Total Plastics, Inc.
Petition Determination:	Affirmed
Petition Disclosure:	1
Category:	Different Hazardous Substance(s)
Determination 20107A:	No Request
Reviewer:	weaverc1
Division Assigned:	Environmental Response Division

D16 West 1/8-1/4 0.203 mi. 1074 ft. | **WELLSAW INC** | **RCRA-NonGen** | **1007099094**
2829 N BURDICK ST | **MIK621886324**
KALAMAZOO, MI 49004

Site 5 of 5 in cluster D

Relative: Higher

Actual: 763 ft.

RCRA-NonGen:

Date form received by agency:	11/02/2001
Facility name:	WELLSAW INC
Facility address:	2829 N BURDICK ST KALAMAZOO, MI 49004
EPA ID:	MIK621886324
Contact:	ED SMITH
Contact address:	2829 N BURDICK ST KALAMAZOO, MI 49004
Contact country:	Not reported
Contact telephone:	(616) 345-0095
Contact email:	Not reported
EPA Region:	05
Classification:	Non-Generator
Description:	Handler: Non-Generators do not presently generate hazardous waste

Owner/Operator Summary:

Owner/operator name:	ROBERT BOYLE
Owner/operator address:	Not reported Not reported
Owner/operator country:	Not reported
Owner/operator telephone:	Not reported
Legal status:	Private
Owner/Operator Type:	Operator
Owner/Op start date:	11/02/2001
Owner/Op end date:	Not reported

Owner/operator name:	ROBERT BOYLE
Owner/operator address:	Not reported Not reported
Owner/operator country:	Not reported
Owner/operator telephone:	Not reported
Legal status:	Private
Owner/Operator Type:	Owner

WELLSAW INC (Continued) **1007099094**

Owner/Op start date: 11/02/2001
Owner/Op end date: Not reported

Handler Activities Summary:
U.S. importer of hazardous waste: No
Mixed waste (haz. and radioactive): No
Recycler of hazardous waste: No
Transporter of hazardous waste: No
Treater, storer or disposer of HW: No
Underground injection activity: No
On-site burner exemption: No
Furnace exemption: No
Used oil fuel burner: No
Used oil processor: No
User oil refiner: No
Used oil fuel marketer to burner: No
Used oil Specification marketer: No
Used oil transfer facility: No
Used oil transporter: No
Off-site waste receiver: Commercial status unknown

Universal Waste Summary:
Waste type: DEVICES CONTAINING ELEMENTAL MERCURY
Accumulated waste on-site: No
Generated waste on-site: No

Waste type: MERCURY THERMOMETERS
Accumulated waste on-site: No
Generated waste on-site: No

Waste type: MERCURY SWITCHES
Accumulated waste on-site: No
Generated waste on-site: No

Waste type: Batteries
Accumulated waste on-site: No
Generated waste on-site: No

Waste type: Lamps
Accumulated waste on-site: No
Generated waste on-site: No

Waste type: Pesticides
Accumulated waste on-site: No
Generated waste on-site: No

Waste type: Thermostats
Accumulated waste on-site: No
Generated waste on-site: No

Violation Status: No violations found

E17
WSW
1/8-1/4
0.220 mi.
1161 ft.

OVEN FRESH
2609 N BURDICK ST
KALAMAZOO, MI 49007

LUST **S100249838**
N/A

Site 1 of 4 in cluster E

Relative:
Higher

Actual:
763 ft.

LUST:

Facility ID:	50001692
Source:	STATE OF MICHIGAN
Owner Name:	Nrt Owner
Owner Address:	Unknown
Owner City,St,Zip:	Unknown, MI 99999
Owner Contact:	Not reported
Owner Phone:	Not reported
Country:	USA
District:	Kalamazoo District Office
Site Name:	Oven Fresh
Latitude:	42.3169170000
Longitude:	-85.5840150000
Date of Collection:	01-11-2001
Method of Collection:	Address Matching-House Number
Accuracy:	100
Accuracy Value Unit:	FEET
Horizontal Data:	NAD83
Point Line Area:	POINT
Desc Category:	Plant Entrance (Freight)
Leak Number:	C-1243-85
Release Date:	Jul 25 1988
Substance Released:	Not reported
Release Status:	Closed
Release Closed Date:	Jan 30 1997

E18
WSW
1/8-1/4
0.220 mi.
1161 ft.

OVEN FRESH
2609 N BURDICK ST.
KALAMAZOO, MI 49007

DEL SHWS **S106508487**
N/A

Site 2 of 4 in cluster E

Relative:
Higher

Actual:
763 ft.

DELETED HWS:

Facility ID:	39000073
Status:	Deleted - available documentation does not support listing

---

E19
WSW
1/8-1/4
0.222 mi.
1174 ft.

KALAMAZOO OIL CO
2601 N BURDICK ST
KALAMAZOO, MI 49007

FINDS **1004722504**
RCRA-CESQG **MI0001006352**

Site 3 of 4 in cluster E

Relative:
Higher

Actual:
763 ft.

FINDS:
Other Pertinent Environmental Activity Identified at Site

RCRAInfo is a national information system that supports the Resource Conservation and Recovery Act (RCRA) program through the tracking of events and activities related to facilities that generate, transport, and treat, store, or dispose of hazardous waste. RCRAInfo allows RCRA program staff to track the notification, permit, compliance, and corrective action activities required under RCRA.

KALAMAZOO OIL CO (Continued) **1004722504**

RCRA-CESQG:

Date form received by agency:	01/17/1995
Facility name:	KALAMAZOO OIL CO
Facility address:	2601 N BURDICK ST KALAMAZOO, MI 49007
EPA ID:	MI0001006352
Contact:	DAVID SONNEVIL
Contact address:	2601 N BURDICK ST KALAMAZOO, MI 49007
Contact country:	Not reported
Contact telephone:	(616) 381-3142
Contact email:	Not reported
EPA Region:	05
Classification:	Conditionally Exempt Small Quantity Generator
Description:	Handler: generates 100 kg or less of hazardous waste per calendar month, and accumulates 1000 kg or less of hazardous waste at any time; or generates 1 kg or less of acutely hazardous waste per calendar month, and accumulates at any time: 1 kg or less of acutely hazardous waste; or 100 kg or less of any residue or contaminated soil, waste or other debris resulting from the cleanup of a spill, into or on any land or water, of acutely hazardous waste; or generates 100 kg or less of any residue or contaminated soil, waste or other debris resulting from the cleanup of a spill, into or on any land or water, of acutely hazardous waste during any calendar month, and accumulates at any time: 1 kg or less of acutely hazardous waste; or 100 kg or less of any residue or contaminated soil, waste or other debris resulting from the cleanup of a spill, into or on any land or water, of acutely hazardous waste

Owner/Operator Summary:

Owner/operator name:	DAVID SONNEVIL
Owner/operator address:	Not reported Not reported
Owner/operator country:	Not reported
Owner/operator telephone:	Not reported
Legal status:	Private
Owner/Operator Type:	Operator
Owner/Op start date:	01/01/1901
Owner/Op end date:	Not reported

Owner/operator name:	DAVID SONNEVIL
Owner/operator address:	Not reported Not reported
Owner/operator country:	Not reported
Owner/operator telephone:	Not reported
Legal status:	Private
Owner/Operator Type:	Owner
Owner/Op start date:	01/01/1901
Owner/Op end date:	Not reported

Handler Activities Summary:

U.S. importer of hazardous waste:	No
Mixed waste (haz. and radioactive):	No
Recycler of hazardous waste:	No
Transporter of hazardous waste:	No
Treater, storer or disposer of HW:	No

KALAMAZOO OIL CO (Continued) **1004722504**

Underground injection activity: No
On-site burner exemption: No
Furnace exemption: No
Used oil fuel burner: No
Used oil processor: No
User oil refiner: No
Used oil fuel marketer to burner: No
Used oil Specification marketer: No
Used oil transfer facility: No
Used oil transporter: No
Off-site waste receiver: Commercial status unknown

Universal Waste Summary:

Waste type: DEVICES CONTAINING ELEMENTAL MERCURY
Accumulated waste on-site: No
Generated waste on-site: No

Waste type: MERCURY THERMOMETERS
Accumulated waste on-site: No
Generated waste on-site: No

Waste type: MERCURY SWITCHES
Accumulated waste on-site: No
Generated waste on-site: No

Waste type: Batteries
Accumulated waste on-site: No
Generated waste on-site: No

Waste type: Lamps
Accumulated waste on-site: No
Generated waste on-site: No

Waste type: Pesticides
Accumulated waste on-site: No
Generated waste on-site: No

Waste type: Thermostats
Accumulated waste on-site: No
Generated waste on-site: No

Violation Status: No violations found

E20
WSW
1/8-1/4
0.222 mi.
1174 ft.

KALAMAZOO OIL COMPANY **LUST** **1000988503**
2601 N BURDICK ST **UST** **N/A**
KALAMAZOO, MI 49007 **AST**

Site 4 of 4 in cluster E

Relative:
Higher

Actual:
763 ft.

LUST:

Facility ID: 00015091
Source: STATE OF MICHIGAN
Owner Name: Kalamazoo Oil Co
Owner Address: 2601 N Burdick St
Owner City,St,Zip: Kalamazoo, MI 49007-1874
Owner Contact: Not reported
Owner Phone: (616) 381-3142
Country: USA

KALAMAZOO OIL COMPANY (Continued) **1000988503**

District:	Kalamazoo District Office
Site Name:	Kalamazoo Oil Company
Latitude:	42.3197220000
Longitude:	-85.5844440000
Date of Collection:	06-02-2006
Method of Collection:	Interpolation-Map
Accuracy:	10
Accuracy Value Unit:	METERS
Horizontal Data:	NAD83
Point Line Area:	POINT
Desc Category:	Plant Entrance (Freight)

Leak Number:	C-0526-96
Release Date:	Aug 16 1996
Substance Released:	Unknown,Unknown
Release Status:	Open
Release Closed Date:	Not reported

Leak Number:	C-1376-94
Release Date:	Nov 14 1994
Substance Released:	Gasoline,Heating Oil,Kerosene,Diesel
Release Status:	Open
Release Closed Date:	Not reported

Leak Number:	C-1749-90
Release Date:	Sep 20 1990
Substance Released:	Not reported
Release Status:	Open
Release Closed Date:	Not reported

UST:

Facility ID:	00015091
Facility Type:	ACTIVE
Latitude:	42.3197220000
Longitude:	-85.5844440000
Owner Name:	Kalamazoo Oil Co
Owner Address:	2601 N Burdick St
Owner City,St,Zip:	Kalamazoo, MI 49007-1874
Owner Country:	USA
Owner Contact:	Not reported
Owner Phone:	(616) 381-3142
Contact:	DAVID SONNEVIL
Contact Phone:	(616) 381-3142
Date of Collection:	06-02-2006
Accuracy:	10
Accuracy Value Unit:	METERS
Horizontal Datum:	NAD83
Source:	STATE OF MICHIGAN
Point Line Area:	POINT
Desc Category:	Plant Entrance (Freight)
Method of Collection:	Interpolation-Map

Tank ID:	5
Tank Status:	**Removed from Ground**
Capacity:	4000
Install Date:	Apr 2 1972
Product:	Kerosene
Remove Date:	Nov 14 1994

KALAMAZOO OIL COMPANY (Continued) **1000988503**

Tank Release Detection: Not reported
Pipe Realease Detection: Not reported
Piping Material: Bare Steel
Piping Type: Not reported
Constr Material: Asphalt Coated or Bare Steel
Impressed Device: No

Tank ID: 6
Tank Status: Removed from Ground
Capacity: 4000
Install Date: Apr 2 1972
Product: Gasoline
Remove Date: Nov 14 1994
Tank Release Detection: Not reported
Pipe Realease Detection: Not reported
Piping Material: Bare Steel
Piping Type: Not reported
Constr Material: Asphalt Coated or Bare Steel
Impressed Device: No

Tank ID: 2
Tank Status: Removed from Ground
Capacity: 12000
Install Date: Apr 2 1956
Product: Diesel
Remove Date: Nov 17 1994
Tank Release Detection: Not reported
Pipe Realease Detection: Not reported
Piping Material: Bare Steel
Piping Type: Not reported
Constr Material: Asphalt Coated or Bare Steel
Impressed Device: No

Tank ID: 4
Tank Status: Removed from Ground
Capacity: 1000
Install Date: Apr 2 1966
Product: Kerosene
Remove Date: Nov 14 1994
Tank Release Detection: Not reported
Pipe Realease Detection: Not reported
Piping Material: Bare Steel
Piping Type: Not reported
Constr Material: Asphalt Coated or Bare Steel
Impressed Device: No

Tank ID: 3
Tank Status: Removed from Ground
Capacity: 12000
Install Date: Apr 2 1956
Product: Kerosene
Remove Date: Nov 17 1994
Tank Release Detection: Not reported

KALAMAZOO OIL COMPANY (Continued) **1000988503**

Pipe Realease Detection: Not reported
Piping Material: Bare Steel
Piping Type: Not reported
Constr Material: Asphalt Coated or Bare Steel
Impressed Device: No

Tank ID: 1
Tank Status: Removed from Ground
Capacity: 1000
Install Date: Apr 2 1978
Product: Gasoline
Remove Date: Nov 17 1994
Tank Release Detection: Not reported
Pipe Realease Detection: Not reported
Piping Material: Bare Steel
Piping Type: Not reported
Constr Material: Asphalt Coated or Bare Steel
Impressed Device: No

Tank ID: 7
Tank Status: Removed from Ground
Capacity: 6000
Install Date: Apr 2 1976
Product: Gasoline
Remove Date: Nov 14 1994
Tank Release Detection: Not reported
Pipe Realease Detection: Not reported
Piping Material: Bare Steel
Piping Type: Not reported
Constr Material: Asphalt Coated or Bare Steel
Impressed Device: No

Tank ID: 8
Tank Status: Currently In Use
Capacity: 15000
Install Date: Jul 31 1991
Product: Gasoline
Remove Date: Not reported
Tank Release Detection: Automatic Tank Gauging,Inter Monitoring/Second Containment
Pipe Realease Detection: Automatic Line Leak Detectors
Piping Material: Fiberglass reinforced plastic
Piping Type: Pressure
Constr Material: Composite(Steel w/Fiberglass),Double Walled
Impressed Device: No

Tank ID: 9
Tank Status: Currently In Use
Capacity: 10000
Install Date: Jul 31 1991
Product: Diesel
Remove Date: Not reported
Tank Release Detection: Automatic Tank Gauging,Inter Monitoring/Second Containment
Pipe Realease Detection: Automatic Line Leak Detectors

KALAMAZOO OIL COMPANY (Continued) **1000988503**

Piping Material: Fiberglass reinforced plastic
Piping Type: Pressure
Constr Material: Composite(Steel w/Fiberglass),Double Walled
Impressed Device: No

AST:

Type: ACTIVE
Owner Name: Kalamazoo Oil Co
Owner Address: 2601 N Burdick St
Owner City,St,Zip: Kalamazoo, MI 49007-1874
Owner County: USA
Owner Contact: Not reported
Owner Telephone: (616) 381-3142
Facility ID: 91039006
District: Kalamazoo District Office
Contact: SUSAN SONNEVIL
Facility Phone: ( ) -
Tank ID: 1
Tank Status: Currently In Use
Capacity: 500000
Install Date: Jan 1 1975
Content: Flammable Liquid
Close Date: Not reported

Type: ACTIVE
Owner Name: Kalamazoo Oil Co
Owner Address: 2601 N Burdick St
Owner City,St,Zip: Kalamazoo, MI 49007-1874
Owner County: USA
Owner Contact: Not reported
Owner Telephone: (616) 381-3142
Facility ID: 91039006
District: Kalamazoo District Office
Contact: SUSAN SONNEVIL
Facility Phone: ( ) -
Tank ID: 2
Tank Status: Currently In Use
Capacity: 170000
Install Date: Jan 1 1975
Content: Flammable Liquid
Close Date: Not reported

Type: ACTIVE
Owner Name: Kalamazoo Oil Co
Owner Address: 2601 N Burdick St
Owner City,St,Zip: Kalamazoo, MI 49007-1874
Owner County: USA
Owner Contact: Not reported
Owner Telephone: (616) 381-3142
Facility ID: 91039006
District: Kalamazoo District Office
Contact: SUSAN SONNEVIL
Facility Phone: ( ) -
Tank ID: 3
Tank Status: Currently In Use
Capacity: 170000
Install Date: Jan 1 1975

KALAMAZOO OIL COMPANY (Continued) **1000988503**

Content: Flammable Liquid
Close Date: Not reported

Type: ACTIVE
Owner Name: Kalamazoo Oil Co
Owner Address: 2601 N Burdick St
Owner City,St,Zip: Kalamazoo, MI 49007-1874
Owner County: USA
Owner Contact: Not reported
Owner Telephone: (616) 381-3142
Facility ID: 91039006
District: Kalamazoo District Office
Contact: SUSAN SONNEVIL
Facility Phone: ( ) -
Tank ID: 4
Tank Status: Currently In Use
Capacity: 20000
Install Date: Jan 1 1978
Content: Flammable Liquid
Close Date: Not reported

Type: ACTIVE
Owner Name: Kalamazoo Oil Co
Owner Address: 2601 N Burdick St
Owner City,St,Zip: Kalamazoo, MI 49007-1874
Owner County: USA
Owner Contact: Not reported
Owner Telephone: (616) 381-3142
Facility ID: 91039006
District: Kalamazoo District Office
Contact: SUSAN SONNEVIL
Facility Phone: ( ) -
Tank ID: 5
Tank Status: Currently In Use
Capacity: 10500
Install Date: Jan 1 1978
Content: Flammable Liquid
Close Date: Not reported

---

21 WNW 1/8-1/4 0.236 mi. 1244 ft.

BORROUGHS CORP
3002 N BURDICK ST
KALAMAZOO, MI 49004

RCRA-SQG SHWS FINDS CERC-NFRAP

1000351792 MID041812777

Relative: Higher

Actual: 763 ft.

RCRA-SQG:
Date form received by agency: 03/26/2007
Facility name: BORROUGHS CORP
Facility address: 3002 N BURDICK ST
KALAMAZOO, MI 49004
EPA ID: MID041812777
Contact: GREGORY GILL
Contact address: 3002 N BURDICK ST
KALAMAZOO, MI 49004
Contact country: Not reported
Contact telephone: (269) 388-4033
Contact email: Not reported
EPA Region: 05

BORROUGHS CORP (Continued) **1000351792**

Land type: Private
Classification: Small Small Quantity Generator
Description: Handler: generates more than 100 and less than 1000 kg of hazardous waste during any calendar month and accumulates less than 6000 kg of hazardous waste at any time; or generates 100 kg or less of hazardous waste during any calendar month, and accumulates more than 1000 kg of hazardous waste at any time

Owner/Operator Summary:
Owner/operator name: TIMOTHY J TYLER
Owner/operator address: Not reported
Not reported
Owner/operator country: Not reported
Owner/operator telephone: Not reported
Legal status: Private
Owner/Operator Type: Operator
Owner/Op start date: 11/05/1991
Owner/Op end date: Not reported

Owner/operator name: TIMOTHY J TYLER
Owner/operator address: Not reported
Not reported
Owner/operator country: Not reported
Owner/operator telephone: Not reported
Legal status: Private
Owner/Operator Type: Owner
Owner/Op start date: 11/05/1991
Owner/Op end date: Not reported

Owner/operator name: BORROUGHS MANUF CORP
Owner/operator address: Not reported
Not reported
Owner/operator country: Not reported
Owner/operator telephone: Not reported
Legal status: Private
Owner/Operator Type: Operator
Owner/Op start date: 11/05/1991
Owner/Op end date: Not reported

Handler Activities Summary:
U.S. importer of hazardous waste: No
Mixed waste (haz. and radioactive): No
Recycler of hazardous waste: No
Transporter of hazardous waste: No
Treater, storer or disposer of HW: No
Underground injection activity: No
On-site burner exemption: No
Furnace exemption: No
Used oil fuel burner: No
Used oil processor: No
User oil refiner: No
Used oil fuel marketer to burner: No
Used oil Specification marketer: No
Used oil transfer facility: No
Used oil transporter: No
Off-site waste receiver: Commercial status unknown

BORROUGHS CORP (Continued) **1000351792**

Universal Waste Summary:

Waste type: DEVICES CONTAINING ELEMENTAL MERCURY
Accumulated waste on-site: No
Generated waste on-site: No

Waste type: MERCURY THERMOMETERS
Accumulated waste on-site: No
Generated waste on-site: No

Waste type: MERCURY SWITCHES
Accumulated waste on-site: No
Generated waste on-site: No

Waste type: Batteries
Accumulated waste on-site: No
Generated waste on-site: No

Waste type: Lamps
Accumulated waste on-site: No
Generated waste on-site: No

Waste type: Pesticides
Accumulated waste on-site: No
Generated waste on-site: No

Waste type: Thermostats
Accumulated waste on-site: No
Generated waste on-site: No

Historical Generators:

Date form received by agency: 03/10/2006
Facility name: BORROUGHS CORP
Classification: Small Quantity Generator

Date form received by agency: 03/07/2005
Facility name: BORROUGHS CORP
Classification: Small Quantity Generator

Date form received by agency: 02/18/2004
Facility name: BORROUGHS CORP
Classification: Small Quantity Generator

Date form received by agency: 04/01/2003
Facility name: BORROUGHS CORP
Classification: Small Quantity Generator

Date form received by agency: 03/25/2003
Facility name: BORROUGHS CORP
Classification: Small Quantity Generator

Date form received by agency: 03/01/2002
Facility name: BORROUGHS CORP
Classification: Small Quantity Generator

Date form received by agency: 02/15/2002
Facility name: BORROUGHS CORP

BORROUGHS CORP (Continued) **1000351792**

Classification: Small Quantity Generator

Date form received by agency: 03/02/2001
Facility name: BORROUGHS CORP
Classification: Small Quantity Generator

Date form received by agency: 02/01/2000
Facility name: BORROUGHS CORP
Classification: Large Quantity Generator

Date form received by agency: 02/27/1998
Facility name: BORROUGHS CORP
Site name: BORROUGHS CORPORATION
Classification: Large Quantity Generator

Date form received by agency: 07/02/1996
Facility name: BORROUGHS CORP
Classification: Small Quantity Generator

Date form received by agency: 02/21/1996
Facility name: BORROUGHS CORP
Site name: BORROUGHS CORPORATION
Classification: Large Quantity Generator

Date form received by agency: 02/25/1994
Facility name: BORROUGHS CORP
Site name: BORROUGHS CORPORATION
Classification: Large Quantity Generator

Date form received by agency: 02/26/1992
Facility name: BORROUGHS CORP
Site name: BORROUGHS CORPORATION
Classification: Large Quantity Generator

Date form received by agency: 02/20/1990
Facility name: BORROUGHS CORP
Site name: BORROUGHS MANUFACTURING CORP
Classification: Large Quantity Generator

Date form received by agency: 08/18/1980
Facility name: BORROUGHS CORP
Classification: Small Quantity Generator

Facility Has Received Notices of Violations:
Regulation violated: Not reported
Area of violation: Generators - Pre-transport
Date violation determined: 12/07/2000
Date achieved compliance: 01/10/2001
Violation lead agency: State
Enforcement action: WRITTEN INFORMAL
Enforcement action date: 12/07/2000
Enf. disposition status: Not reported
Enf. disp. status date: Not reported
Enforcement lead agency: State
Proposed penalty amount: Not reported
Final penalty amount: Not reported
Paid penalty amount: Not reported

BORROUGHS CORP (Continued) **1000351792**

Regulation violated: Not reported
Area of violation: Generators - Pre-transport
Date violation determined: 06/25/1996
Date achieved compliance: 08/06/1996
Violation lead agency: State
Enforcement action: WRITTEN INFORMAL
Enforcement action date: 06/25/1996
Enf. disposition status: Not reported
Enf. disp. status date: Not reported
Enforcement lead agency: State
Proposed penalty amount: Not reported
Final penalty amount: Not reported
Paid penalty amount: Not reported

Regulation violated: Not reported
Area of violation: Generators - General
Date violation determined: 06/04/1991
Date achieved compliance: 08/08/1991
Violation lead agency: State
Enforcement action: WRITTEN INFORMAL
Enforcement action date: 06/26/1991
Enf. disposition status: Not reported
Enf. disp. status date: Not reported
Enforcement lead agency: State
Proposed penalty amount: Not reported
Final penalty amount: Not reported
Paid penalty amount: Not reported

Regulation violated: Not reported
Area of violation: Generators - General
Date violation determined: 09/30/1988
Date achieved compliance: 03/02/1989
Violation lead agency: State
Enforcement action: WRITTEN INFORMAL
Enforcement action date: 10/25/1988
Enf. disposition status: Not reported
Enf. disp. status date: Not reported
Enforcement lead agency: State
Proposed penalty amount: Not reported
Final penalty amount: Not reported
Paid penalty amount: Not reported

Regulation violated: Not reported
Area of violation: LDR - General
Date violation determined: 09/30/1988
Date achieved compliance: 03/02/1989
Violation lead agency: State
Enforcement action: WRITTEN INFORMAL
Enforcement action date: 10/25/1988
Enf. disposition status: Not reported
Enf. disp. status date: Not reported
Enforcement lead agency: State
Proposed penalty amount: Not reported
Final penalty amount: Not reported
Paid penalty amount: Not reported

Regulation violated: Not reported

BORROUGHS CORP (Continued) **1000351792**

Area of violation: Generators - General
Date violation determined: 09/29/1987
Date achieved compliance: 01/18/1988
Violation lead agency: State
Enforcement action: WRITTEN INFORMAL
Enforcement action date: 10/02/1987
Enf. disposition status: Not reported
Enf. disp. status date: Not reported
Enforcement lead agency: State
Proposed penalty amount: Not reported
Final penalty amount: Not reported
Paid penalty amount: Not reported

Evaluation Action Summary:
Evaluation date: 11/21/2000
Evaluation: COMPLIANCE EVALUATION INSPECTION ON-SITE
Area of violation: Generators - Pre-transport
Date achieved compliance: 01/10/2001
Evaluation lead agency: State

Evaluation date: 06/20/1996
Evaluation: COMPLIANCE EVALUATION INSPECTION ON-SITE
Area of violation: Generators - Pre-transport
Date achieved compliance: 08/06/1996
Evaluation lead agency: State

Evaluation date: 06/04/1991
Evaluation: COMPLIANCE EVALUATION INSPECTION ON-SITE
Area of violation: Generators - General
Date achieved compliance: 08/08/1991
Evaluation lead agency: State

Evaluation date: 09/30/1988
Evaluation: COMPLIANCE EVALUATION INSPECTION ON-SITE
Area of violation: LDR - General
Date achieved compliance: 03/02/1989
Evaluation lead agency: State

Evaluation date: 09/30/1988
Evaluation: COMPLIANCE EVALUATION INSPECTION ON-SITE
Area of violation: Generators - General
Date achieved compliance: 03/02/1989
Evaluation lead agency: State

Evaluation date: 09/29/1987
Evaluation: COMPLIANCE EVALUATION INSPECTION ON-SITE
Area of violation: Generators - General
Date achieved compliance: 01/18/1988
Evaluation lead agency: State

Evaluation date: 09/20/1985
Evaluation: COMPLIANCE EVALUATION INSPECTION ON-SITE
Area of violation: Not reported
Date achieved compliance: Not reported
Evaluation lead agency: State

SHWS:

BORROUGHS CORP (Continued) **1000351792**

Facility ID: 39000220
Source: Fabricated Metal Products
SAM Score: 28 out of 48
SAM Score Date: 03/29/2004
Township: 02S
Range: 11W
Section: 03
Quarter: SW
Quarter/Quarter: NE
Facility Status: Interim Response in progress
Pollutant(s): 1,2,4 TMB; Benzene; Ethylbenzene; PCE; Toluene; TCE; VC; Xylenes; PNAs

FINDS:
Other Pertinent Environmental Activity Identified at Site

AFS (Aerometric Information Retrieval System (AIRS) Facility Subsystem) replaces the former Compliance Data System (CDS), the National Emission Data System (NEDS), and the Storage and Retrieval of Aerometric Data (SAROAD). AIRS is the national repository for information concerning airborne pollution in the United States. AFS is used to track emissions and compliance data from industrial plants. AFS data are utilized by states to prepare State Implementation Plans to comply with regulatory programs and by EPA as an input for the estimation of total national emissions. AFS is undergoing a major redesign to support facility operating permits required under Title V of the Clean Air Act.

TRIS (Toxics Release Inventory System) contains information from facilities on the amounts of over 300 listed toxic chemicals that these facilities release directly to air, water, land, or that are transported off-site.

The NEI (National Emissions Inventory) database contains information on stationary and mobile sources that emit criteria air pollutants and their precursors, as well as hazardous air pollutants (HAPs).

RCRAInfo is a national information system that supports the Resource Conservation and Recovery Act (RCRA) program through the tracking of events and activities related to facilities that generate, transport, and treat, store, or dispose of hazardous waste. RCRAInfo allows RCRA program staff to track the notification, permit, compliance, and corrective action activities required under RCRA.

CERC-NFRAP:
Site ID: 0502472
Federal Facility: Not a Federal Facility
NPL Status: Not on the NPL
Non NPL Status: NFRAP

Site Description: Not reported

CERCLIS-NFRAP Assessment History:
Action: DISCOVERY
Date Started: Not reported

BORROUGHS CORP (Continued) **1000351792**

Date Completed: 05/01/1981
Priority Level: Not reported

Action: ARCHIVE SITE
Date Started: Not reported
Date Completed: 09/21/1987
Priority Level: Not reported

Action: PRELIMINARY ASSESSMENT
Date Started: Not reported
Date Completed: 09/21/1987
Priority Level: NFRAP (No Futher Remedial Action Planned

22
SW
1/4-1/2
0.256 mi.
1350 ft.

ROWEN & BLAIR ELECTRIC CO **LUST** **U000256410**
2513 N BURDICK ST **UST** **N/A**
KALAMAZOO, MI 49007

Relative:
Higher

Actual:
764 ft.

LUST:
Facility ID: 00004760
Source: STATE OF MICHIGAN
Owner Name: Rowen & Blair Electric Co
Owner Address: 2513 N Burdick St
Owner City,St,Zip: Kalamazoo, MI 49007-1875
Owner Contact: Not reported
Owner Phone: (616) 381-3050
Country: USA
District: Kalamazoo District Office
Site Name: Rowen & Blair Electric Co
Latitude: 42.3161110000
Longitude: -85.5841660000
Date of Collection: 27-10-2005
Method of Collection: Interpolation-Map
Accuracy: 15
Accuracy Value Unit: METERS
Horizontal Data: NAD83
Point Line Area: POINT
Desc Category: Not reported

Leak Number: C-0109-05
Release Date: Sep 1 1990
Substance Released: Gasoline,Gasoline,Used Oil,Used Oil
Release Status: Open
Release Closed Date: Not reported

UST:
Facility ID: 00004760
Facility Type: CLOSED
Latitude: 42.3161110000
Longitude: -85.5841660000
Owner Name: Rowen & Blair Electric Co
Owner Address: 2513 N Burdick St
Owner City,St,Zip: Kalamazoo, MI 49007-1875
Owner Country: USA
Owner Contact: Not reported
Owner Phone: (616) 381-3050
Contact: N. GORDON YAGER

ROWEN & BLAIR ELECTRIC CO (Continued) **U000256410**

Contact Phone:	(616) 381-3050
Date of Collection:	27-10-2005
Accuracy:	15
Accuracy Value Unit:	METERS
Horizontal Datum:	NAD83
Source:	STATE OF MICHIGAN
Point Line Area:	POINT
Desc Category:	Not reported
Method of Collection:	Interpolation-Map

Tank ID:	2
Tank Status:	**Removed from Ground**
Capacity:	2000
Install Date:	May 1 1979
Product:	Gasoline
Remove Date:	Sep 30 1990
Tank Release Detection:	Not reported
Pipe Realease Detection:	Not reported
Piping Material:	Galvanized Steel
Piping Type:	Not reported
Constr Material:	Asphalt Coated or Bare Steel
Impressed Device:	No

Tank ID:	3
Tank Status:	**Removed from Ground**
Capacity:	4000
Install Date:	Apr 30 1976
Product:	Used Oil
Remove Date:	Sep 30 1990
Tank Release Detection:	Not reported
Pipe Realease Detection:	Not reported
Piping Material:	Galvanized Steel
Piping Type:	Not reported
Constr Material:	Asphalt Coated or Bare Steel
Impressed Device:	No

Tank ID:	4
Tank Status:	**Removed from Ground**
Capacity:	4000
Install Date:	Apr 30 1982
Product:	Used Oil
Remove Date:	Sep 30 1990
Tank Release Detection:	Not reported
Pipe Realease Detection:	Not reported
Piping Material:	Galvanized Steel
Piping Type:	Not reported
Constr Material:	Asphalt Coated or Bare Steel
Impressed Device:	No

Tank ID:	1
Tank Status:	**Removed from Ground**
Capacity:	1000
Install Date:	Apr 30 1966
Product:	Gasoline

ROWEN & BLAIR ELECTRIC CO (Continued) **U000256410**

Remove Date: Sep 30 1990
Tank Release Detection: Not reported
Pipe Realease Detection: Not reported
Piping Material: Galvanized Steel
Piping Type: Not reported
Constr Material: Asphalt Coated or Bare Steel
Impressed Device: No

F23
SW
1/4-1/2
0.297 mi.
1566 ft.

MICRO MACHINE COMPANY **BEA** **S104911365**
2429 NORTH BURDICK STREET **N/A**
KALAMAZOO, MI 49007

Site 1 of 2 in cluster F

Relative:
Higher

Actual:
764 ft.

BEA:
Secondary Address: Not reported
BEA Number: 441
District: Kalamazoo
Date Received: 2/26/2001 12:59:00 AM
Submitter Name: Fairway Holdings, L.L. C.
Petition Determination: No Request
Petition Disclosure: 0
Category: Same Hazardous Substance(s)
Determination 20107A: No Request
Reviewer: weaverc1
Division Assigned: Environmental Response Division

F24
SW
1/4-1/2
0.311 mi.
1641 ft.

PANELYTE **PADS** **1000205562**
2403 BURDICK **SHWS** **MID982070195**
KALAMAZOO, MI 49007 **FINDS**
BROWNFIELDS

Site 2 of 2 in cluster F

Relative:
Higher

Actual:
764 ft.

SHWS:
Facility ID: 39000080
Source: Nonclassifiable Establishments
SAM Score: 31 out of 48
SAM Score Date: 09/17/2004
Township: 02S
Range: 11W
Section: 27
Quarter: NW
Quarter/Quarter: SE
Facility Status: Interim Response conducted
Pollutant(s): As; Cr+6; PCB's; PCE; Zn; Hg

FINDS:
Other Pertinent Environmental Activity Identified at Site

NCDB (National Compliance Data Base) supports implementation of the Federal Insecticide, Fungicide, and Rodenticide Act (FIFRA) and the Toxic Substances Control Act (TSCA). The system tracks inspections in regions and states with cooperative agreements, enforcement actions, and settlements.

PANELYTE (Continued) **1000205562**

TARGETED BROWNSFIELDS ASSESSMENTS

CERCLIS (Comprehensive Environmental Response, Compensation, and Liability Information System) is the Superfund database that is used to support management in all phases of the Superfund program. The system contains information on all aspects of hazardous waste sites, including an inventory of sites, planned and actual site activities, and financial information.

ICIS (Integrated Compliance Information System) is the Integrated Compliance Information System and provides a database that, when complete, will contain integrated Enforcement and Compliance information across most of EPA's programs. The vision for ICIS is to replace EPA's independent databases that contain Enforcement data with a single repository for that information. Currently, ICIS contains all Federal Administrative and Judicial enforcement actions. This information is maintained in ICIS by EPA in the Regional offices and its Headquarters. A future release of ICIS will replace the Permit Compliance System (PCS) which supports the NPDES and will integrate that information with Federal actions already in the system. ICIS also has the capability to track other activities occurring in the Region that support Compliance and Enforcement programs. These include; Incident Tracking, Compliance Assistance, and Compliance Monitoring.

BROWNFIELD:

Facility ID:	Not reported
Region:	1
Status:	In Progress
Properry Use:	Not reported
BEA:	No
Ernie Id Number:	39000080
Redevelop Status:	Not reported
Before Redevelopment:	Not reported
After Redevelopment:	Not reported

25
SSW
1/4-1/2
0.365 mi.
1930 ft.

FLINT INK CORP **FINDS** **1000173819**
2309 NORTH BURDICK STREET **CERC-NFRAP** **MID005360235**
KALAMAZOO, MI 49007 **RCRA-NonGen**

Relative:
Higher

Actual:
765 ft.

FINDS:
Other Pertinent Environmental Activity Identified at Site

RCRAInfo is a national information system that supports the Resource Conservation and Recovery Act (RCRA) program through the tracking of events and activities related to facilities that generate, transport, and treat, store, or dispose of hazardous waste. RCRAInfo allows RCRA program staff to track the notification, permit, compliance, and corrective action activities required under RCRA.

CERC-NFRAP:

Site ID:	0502282
Federal Facility:	Not a Federal Facility
NPL Status:	Not on the NPL

FLINT INK CORP (Continued) **1000173819**

Non NPL Status: NFRAP

CERCLIS-NFRAP Site Alias Name(s):
Alias Name: SINCLAIR & VALENTINE CO INC
Alias Address: Not reported
MI
Site Description: Not reported

CERCLIS-NFRAP Assessment History:
Action: DISCOVERY
Date Started: Not reported
Date Completed: 06/01/1981
Priority Level: Not reported

Action: PRELIMINARY ASSESSMENT
Date Started: Not reported
Date Completed: 04/01/1983
Priority Level: Low

Action: SITE INSPECTION
Date Started: Not reported
Date Completed: 02/04/1991
Priority Level: NFRAP (No Futher Remedial Action Planned

Action: ARCHIVE SITE
Date Started: Not reported
Date Completed: 12/12/1996
Priority Level: Not reported

RCRA-NonGen:
Date form received by agency: 11/30/2004
Facility name: FLINT INK NORTH AMERICAN CORP
Facility address: 2309 N BURDICK ST
KALAMAZOO, MI 49005
EPA ID: MID005360235
Mailing address: 4600 ARROWHEAD DR
ANN ARBOR, MI 48105
Contact: CHRIS BARRICKLOW
Contact address: 2309 N BURDICK ST
KALAMAZOO, MI 49005
Contact country: Not reported
Contact telephone: (734) 622-6779
Contact email: Not reported
EPA Region: 05
Land type: Other land type
Classification: Non-Generator
Description: Handler: Non-Generators do not presently generate hazardous waste

Owner/Operator Summary:
Owner/operator name: NO ACTIVE O/OP AS NOT GENERATING WASTE
Owner/operator address: Not reported
Not reported
Owner/operator country: Not reported
Owner/operator telephone: Not reported
Legal status: Private
Owner/Operator Type: Operator

FLINT INK CORP (Continued) **1000173819**

Owner/Op start date: 07/15/2004
Owner/Op end date: Not reported

Owner/operator name: NO ACTIVE O/OP AS NOT GENERATING WASTE
Owner/operator address: Not reported
Not reported
Owner/operator country: Not reported
Owner/operator telephone: Not reported
Legal status: Private
Owner/Operator Type: Owner
Owner/Op start date: 07/15/2004
Owner/Op end date: Not reported

Handler Activities Summary:
U.S. importer of hazardous waste: No
Mixed waste (haz. and radioactive): No
Recycler of hazardous waste: No
Transporter of hazardous waste: No
Treater, storer or disposer of HW: No
Underground injection activity: No
On-site burner exemption: No
Furnace exemption: No
Used oil fuel burner: No
Used oil processor: No
User oil refiner: No
Used oil fuel marketer to burner: No
Used oil Specification marketer: No
Used oil transfer facility: No
Used oil transporter: No
Off-site waste receiver: Commercial status unknown

Universal Waste Summary:
Waste type: DEVICES CONTAINING ELEMENTAL MERCURY
Accumulated waste on-site: No
Generated waste on-site: No

Waste type: MERCURY THERMOMETERS
Accumulated waste on-site: No
Generated waste on-site: No

Waste type: MERCURY SWITCHES
Accumulated waste on-site: No
Generated waste on-site: No

Waste type: Batteries
Accumulated waste on-site: No
Generated waste on-site: No

Waste type: Lamps
Accumulated waste on-site: No
Generated waste on-site: No

Waste type: Pesticides
Accumulated waste on-site: No
Generated waste on-site: No

FLINT INK CORP (Continued) **1000173819**

Waste type: Thermostats
Accumulated waste on-site: No
Generated waste on-site: No

Historical Generators:
Date form received by agency: 07/14/2004
Facility name: FLINT INK NORTH AMERICAN CORP
Classification: Not a generator, verified

Date form received by agency: 03/30/2004
Facility name: FLINT INK NORTH AMERICAN CORP
Classification: Not a generator, verified

Date form received by agency: 03/01/2004
Facility name: FLINT INK NORTH AMERICAN CORP
Classification: Large Quantity Generator

Date form received by agency: 09/03/2003
Facility name: FLINT INK NORTH AMERICAN CORP
Classification: Not a generator, verified

Date form received by agency: 08/18/1980
Facility name: FLINT INK NORTH AMERICAN CORP
Classification: Not a generator, verified

Facility Has Received Notices of Violations:
Regulation violated: Not reported
Area of violation: Generators - Pre-transport
Date violation determined: 06/07/2001
Date achieved compliance: 07/02/2001
Violation lead agency: State
Enforcement action: WRITTEN INFORMAL
Enforcement action date: 06/15/2001
Enf. disposition status: Not reported
Enf. disp. status date: Not reported
Enforcement lead agency: State
Proposed penalty amount: Not reported
Final penalty amount: Not reported
Paid penalty amount: Not reported

Regulation violated: Not reported
Area of violation: Generators - Records/Reporting
Date violation determined: 06/07/2001
Date achieved compliance: 07/02/2001
Violation lead agency: State
Enforcement action: WRITTEN INFORMAL
Enforcement action date: 06/15/2001
Enf. disposition status: Not reported
Enf. disp. status date: Not reported
Enforcement lead agency: State
Proposed penalty amount: Not reported
Final penalty amount: Not reported
Paid penalty amount: Not reported

Regulation violated: Not reported
Area of violation: Generators - General

FLINT INK CORP (Continued) **1000173819**

Date violation determined: 04/25/1995
Date achieved compliance: 06/15/1995
Violation lead agency: State
Enforcement action: WRITTEN INFORMAL
Enforcement action date: 04/25/1995
Enf. disposition status: Not reported
Enf. disp. status date: Not reported
Enforcement lead agency: State
Proposed penalty amount: Not reported
Final penalty amount: Not reported
Paid penalty amount: Not reported

Regulation violated: Not reported
Area of violation: LDR - General
Date violation determined: 04/25/1995
Date achieved compliance: 06/15/1995
Violation lead agency: State
Enforcement action: WRITTEN INFORMAL
Enforcement action date: 04/25/1995
Enf. disposition status: Not reported
Enf. disp. status date: Not reported
Enforcement lead agency: State
Proposed penalty amount: Not reported
Final penalty amount: Not reported
Paid penalty amount: Not reported

Regulation violated: Not reported
Area of violation: Generators - General
Date violation determined: 12/05/1984
Date achieved compliance: 03/13/1985
Violation lead agency: State
Enforcement action: WRITTEN INFORMAL
Enforcement action date: 12/17/1984
Enf. disposition status: Not reported
Enf. disp. status date: Not reported
Enforcement lead agency: State
Proposed penalty amount: Not reported
Final penalty amount: Not reported
Paid penalty amount: Not reported

Evaluation Action Summary:
Evaluation date: 06/07/2001
Evaluation: COMPLIANCE EVALUATION INSPECTION ON-SITE
Area of violation: Generators - Pre-transport
Date achieved compliance: 07/02/2001
Evaluation lead agency: State

Evaluation date: 06/07/2001
Evaluation: COMPLIANCE EVALUATION INSPECTION ON-SITE
Area of violation: Generators - Records/Reporting
Date achieved compliance: 07/02/2001
Evaluation lead agency: State

Evaluation date: 04/13/1995
Evaluation: COMPLIANCE EVALUATION INSPECTION ON-SITE
Area of violation: Generators - General
Date achieved compliance: 06/15/1995

FLINT INK CORP (Continued) **1000173819**

Evaluation lead agency: State

Evaluation date: 04/13/1995
Evaluation: COMPLIANCE EVALUATION INSPECTION ON-SITE
Area of violation: LDR - General
Date achieved compliance: 06/15/1995
Evaluation lead agency: State

Evaluation date: 04/13/1995
Evaluation: COMPLIANCE EVALUATION INSPECTION ON-SITE
Area of violation: Not reported
Date achieved compliance: Not reported
Evaluation lead agency: EPA

Evaluation date: 03/06/1986
Evaluation: COMPLIANCE EVALUATION INSPECTION ON-SITE
Area of violation: Not reported
Date achieved compliance: Not reported
Evaluation lead agency: State

Evaluation date: 02/07/1985
Evaluation: COMPLIANCE SCHEDULE EVALUATION
Area of violation: Not reported
Date achieved compliance: Not reported
Evaluation lead agency: State

Evaluation date: 12/05/1984
Evaluation: COMPLIANCE EVALUATION INSPECTION ON-SITE
Area of violation: Generators - General
Date achieved compliance: 03/13/1985
Evaluation lead agency: State

G26 **IMPERIAL ADHESIVES** **DEL SHWS** **S105965908**
NNW **3334 N. PITCHER STREET** **N/A**
1/4-1/2 **KALAMAZOO, MI 49007**
0.425 mi.
2246 ft. **Site 1 of 2 in cluster G**

Relative:
Equal

Actual:
760 ft.

DELETED HWS:
Facility ID: 39000025
Status: Delisted - no longer meets criteria specified in rules

---

G27 **IMPERIAL ADHESIVES INCORPORATED MICHIGAN DIVISION** **FINDS** **1000215170**
NNW **3334 N. PITCHER ST.** **LUST** **MID982632028**
1/4-1/2 **KALAMAZOO, MI 49007** **UST**
0.425 mi. **RCRA-NonGen**
2246 ft. **Site 2 of 2 in cluster G**

Relative:
Equal

Actual:
760 ft.

FINDS:
Other Pertinent Environmental Activity Identified at Site

TRIS (Toxics Release Inventory System) contains information from facilities on the amounts of over 300 listed toxic chemicals that these facilities release directly to air, water, land, or that are transported off-site.

RCRAInfo is a national information system that supports the Resource

IMPERIAL ADHESIVES INCORPORATED MICHIGAN DIVISION (Continued) **1000215170**

Conservation and Recovery Act (RCRA) program through the tracking of events and activities related to facilities that generate, transport, and treat, store, or dispose of hazardous waste. RCRAInfo allows RCRA program staff to track the notification, permit, compliance, and corrective action activities required under RCRA.

LUST:

Facility ID:	00033048
Source:	STATE OF MICHIGAN
Owner Name:	Imperial Adhesives Inc
Owner Address:	6315 Wiehe Rd
Owner City,St,Zip:	Cincinnati, OH 45237-4213
Owner Contact:	Not reported
Owner Phone:	(513) 351-1300
Country:	USA
District:	Kalamazoo District Office
Site Name:	Imperial Adhesives
Latitude:	42.3254980000
Longitude:	-85.5819850000
Date of Collection:	01-11-2001
Method of Collection:	Address Matching-House Number
Accuracy:	100
Accuracy Value Unit:	FEET
Horizontal Data:	NAD83
Point Line Area:	POINT
Desc Category:	Plant Entrance (Freight)
Leak Number:	C-1515-92
Release Date:	Sep 3 1992
Substance Released:	Hazardous Substance
Release Status:	Closed
Release Closed Date:	Nov 25 1996

UST:

Facility ID:	00033048
Facility Type:	CLOSED
Latitude:	42.3254980000
Longitude:	-85.5819850000
Owner Name:	Imperial Adhesives Inc
Owner Address:	6315 Wiehe Rd
Owner City,St,Zip:	Cincinnati, OH 45237-4213
Owner Country:	USA
Owner Contact:	Not reported
Owner Phone:	(513) 351-1300
Contact:	MR RONALD BOYKIN
Contact Phone:	(616) 344-2760
Date of Collection:	01-11-2001
Accuracy:	100
Accuracy Value Unit:	FEET
Horizontal Datum:	NAD83
Source:	STATE OF MICHIGAN
Point Line Area:	POINT
Desc Category:	Plant Entrance (Freight)
Method of Collection:	Address Matching-House Number
Tank ID:	1

IMPERIAL ADHESIVES INCORPORATED MICHIGAN DIVISION (Continued) **1000215170**

Tank Status:	**Removed from Ground**
Capacity:	15000
Install Date:	Sep 8 1983
Product:	Hazardous Substance
Remove Date:	Aug 9 1995
Tank Release Detection:	Not reported
Pipe Realease Detection:	Not reported
Piping Material:	Cathodically Protected,Galvanized Steel
Piping Type:	Not reported
Constr Material:	Asphalt Coated or Bare Steel,Cathodically Protected Steel,Lined Interier
Impressed Device:	No

RCRA-NonGen:

Date form received by agency:	03/04/1996
Facility name:	IMPERIAL ADHESIVES INC
Facility address:	3334 N PITCHER ST KALAMAZOO, MI 49004
EPA ID:	MID982632028
Contact:	CASEY SPIELMAKER
Contact address:	3334 N PITCHER ST KALAMAZOO, MI 49004
Contact country:	Not reported
Contact telephone:	(616) 345-1533
Contact email:	Not reported
EPA Region:	05
Land type:	Other land type
Classification:	Non-Generator
Description:	Handler: Non-Generators do not presently generate hazardous waste

Owner/Operator Summary:

Owner/operator name:	NO ACTIVE O/OP AS NOT GENERATING WASTE
Owner/operator address:	Not reported Not reported
Owner/operator country:	Not reported
Owner/operator telephone:	Not reported
Legal status:	Private
Owner/Operator Type:	Owner
Owner/Op start date:	03/07/1996
Owner/Op end date:	Not reported

Owner/operator name:	NO ACTIVE O/OP AS NOT GENERATING WASTE
Owner/operator address:	Not reported Not reported
Owner/operator country:	Not reported
Owner/operator telephone:	Not reported
Legal status:	Private
Owner/Operator Type:	Operator
Owner/Op start date:	03/07/1996
Owner/Op end date:	Not reported

Handler Activities Summary:

U.S. importer of hazardous waste:	No
Mixed waste (haz. and radioactive):	No
Recycler of hazardous waste:	No
Transporter of hazardous waste:	No

IMPERIAL ADHESIVES INCORPORATED MICHIGAN DIVISION (Continued) **1000215170**

Treater, storer or disposer of HW: No
Underground injection activity: No
On-site burner exemption: No
Furnace exemption: No
Used oil fuel burner: No
Used oil processor: No
User oil refiner: No
Used oil fuel marketer to burner: No
Used oil Specification marketer: No
Used oil transfer facility: No
Used oil transporter: No
Off-site waste receiver: Commercial status unknown

Universal Waste Summary:
Waste type: DEVICES CONTAINING ELEMENTAL MERCURY
Accumulated waste on-site: No
Generated waste on-site: No

Waste type: MERCURY THERMOMETERS
Accumulated waste on-site: No
Generated waste on-site: No

Waste type: MERCURY SWITCHES
Accumulated waste on-site: No
Generated waste on-site: No

Waste type: Batteries
Accumulated waste on-site: No
Generated waste on-site: No

Waste type: Lamps
Accumulated waste on-site: No
Generated waste on-site: No

Waste type: Pesticides
Accumulated waste on-site: No
Generated waste on-site: No

Waste type: Thermostats
Accumulated waste on-site: No
Generated waste on-site: No

Historical Generators:
Date form received by agency: 02/20/1996
Facility name: IMPERIAL ADHESIVES INC
Site name: IMPERIAL ADHESIVES, INC.
Classification: Large Quantity Generator

Date form received by agency: 02/07/1996
Facility name: IMPERIAL ADHESIVES INC
Classification: Not a generator, verified

Facility Has Received Notices of Violations:
Regulation violated: Not reported
Area of violation: Generators - General
Date violation determined: 02/13/1992

IMPERIAL ADHESIVES INCORPORATED MICHIGAN DIVISION (Continued) **1000215170**

Date achieved compliance: 06/23/1992
Violation lead agency: State
Enforcement action: WRITTEN INFORMAL
Enforcement action date: 04/29/1992
Enf. disposition status: Not reported
Enf. disp. status date: Not reported
Enforcement lead agency: State
Proposed penalty amount: Not reported
Final penalty amount: Not reported
Paid penalty amount: Not reported

Evaluation Action Summary:
Evaluation date: 02/13/1992
Evaluation: COMPLIANCE EVALUATION INSPECTION ON-SITE
Area of violation: Generators - General
Date achieved compliance: 06/23/1992
Evaluation lead agency: State

28
ENE
1/4-1/2
0.483 mi.
2553 ft.

ECONOMY PRINTING COMPANY **BEA** **S104910998**
600 SHOPPERS LANE **N/A**
PARCHMENT, MI

Relative:
Higher

Actual:
768 ft.

BEA:
Secondary Address: Not reported
BEA Number: 332
District: Kalamazoo
Date Received: 1/11/2000
Submitter Name: Sebastian Enterprises, LLC
Petition Determination: No Request
Petition Disclosure: 0
Category: Different Hazardous Substance(s)
Determination 20107A: No Request
Reviewer: temppm
Division Assigned: Environmental Response Division

H29
South
1/4-1/2
0.495 mi.
2612 ft.

PITCHER (2101) STREET, NORTH (ALLEN TEST **BEA** **S108895969**
2101 NORTH PITCHER STREET **N/A**
KALAMAZOO, MI

Site 1 of 5 in cluster H

Relative:
Higher

Actual:
762 ft.

BEA:
Secondary Address: Not reported
BEA Number: 1199
District: Kalamazoo
Date Received: 11/9/2007 12:59:00 AM
Submitter Name: Brewco IV, LLC
Petition Determination: No Request
Petition Disclosure: 0
Category: No Hazardous Substance(s)
Determination 20107A: No Request
Reviewer: ducharmm
Division Assigned: Environmental Response Division

H30 South 1/4-1/2 0.495 mi. 2612 ft. | **2101-2225 N. PITCHER ST** | **BEA** | **S105541775**
2101-2225 N. PITCHER ST | **N/A**
KALAMAZOO, MI

Site 2 of 5 in cluster H

Relative: Higher

Actual: 762 ft.

BEA:

Secondary Address:	Not reported
BEA Number:	23
District:	Kalamazoo
Date Received:	3/29/1996
Submitter Name:	KSM
Petition Determination:	None
Petition Disclosure:	1
Category:	Same Hazardous Substance(s)
Determination 20107A:	No Request
Reviewer:	ducharmm
Division Assigned:	Environmental Response Division

Secondary Address:	Not reported
BEA Number:	910
District:	Kalamazoo
Date Received:	10/5/2005 12:59:00 AM
Submitter Name:	Michigan Material Handlers, Inc.
Petition Determination:	Affirmed
Petition Disclosure:	1
Category:	No Hazardous Substance(s)
Determination 20107A:	No Request
Reviewer:	weaverc1
Division Assigned:	Environmental Response Division

H31 South 1/4-1/2 0.495 mi. 2612 ft. | **2101-2225 N. PITCHER ST. - BIC** | **SHWS** | **S105144191**
2101-2225 NORTH PITCHER STREET | **N/A**
KALAMAZOO, MI 0null

Site 3 of 5 in cluster H

Relative: Higher

Actual: 762 ft.

SHWS:

Facility ID:	39000433
Source:	Unknown
SAM Score:	28 out of 48
SAM Score Date:	03/29/2004
Township:	02S
Range:	11W
Section:	10
Quarter:	NE
Quarter/Quarter:	SW
Facility Status:	**Inactive - no actions taken to address contamination**
Pollutant(s):	As; Pb; Phenanthrene; TCE

H32 **ALLEN TEST PRODUCTS** **SHWS** **S103595300**
South **2101 N PITCHER STREET** **N/A**
1/4-1/2 **KALAMAZOO, MI 49005**
0.495 mi.
2612 ft. **Site 4 of 5 in cluster H**

Relative:
Higher

Actual:
762 ft.

SHWS:
Facility ID: 39000445
Source: Testing Laboratories
SAM Score: 32 out of 48
SAM Score Date: 03/29/2004
Township: 02s
Range: 11w
Section: 10
Quarter: NE
Quarter/Quarter: SW
Facility Status: Interim Response in progress
Pollutant(s): As; Pb; TCE

H33 **BEA** **S105767740**
South **2101-2225 N PITCHER ST** **N/A**
1/4-1/2 **KALAMAZOO, MI**
0.495 mi.
2612 ft. **Site 5 of 5 in cluster H**

Relative:
Higher

Actual:
762 ft.

BEA:
Secondary Address: Not reported
BEA Number: 14
District: Kalamazoo
Date Received: 12/4/1995
Submitter Name: BULLARD INDUSTRIAL CORP
Petition Determination: Affirmed
Petition Disclosure: 1
Category: Same Hazardous Substance(s)
Determination 20107A: Affirmed
Reviewer: temppm
Division Assigned: Environmental Response Division

I34 **CLAUSING CORP** **SHWS** **1001202272**
South **2019 N PITCHER** **FINDS** **MID005319728**
1/2-1 **KALAMAZOO, MI 49007** **RCRA-CESQG**
0.558 mi.
2947 ft. **Site 1 of 3 in cluster I**

Relative:
Higher

Actual:
762 ft.

SHWS:
Facility ID: 39000079
Source: Metal Working Machinery
SAM Score: 26 out of 48
SAM Score Date: 04/06/2004
Township: 02S
Range: 11W
Section: 39
Quarter: NW
Quarter/Quarter: SE
Facility Status: Interim Response in progress
Pollutant(s): 1,2 DCP; TCE

CLAUSING CORP (Continued) **1001202272**

FINDS:
Other Pertinent Environmental Activity Identified at Site

AFS (Aerometric Information Retrieval System (AIRS) Facility Subsystem) replaces the former Compliance Data System (CDS), the National Emission Data System (NEDS), and the Storage and Retrieval of Aerometric Data (SAROAD). AIRS is the national repository for information concerning airborne pollution in the United States. AFS is used to track emissions and compliance data from industrial plants. AFS data are utilized by states to prepare State Implementation Plans to comply with regulatory programs and by EPA as an input for the estimation of total national emissions. AFS is undergoing a major redesign to support facility operating permits required under Title V of the Clean Air Act.

RCRAInfo is a national information system that supports the Resource Conservation and Recovery Act (RCRA) program through the tracking of events and activities related to facilities that generate, transport, and treat, store, or dispose of hazardous waste. RCRAInfo allows RCRA program staff to track the notification, permit, compliance, and corrective action activities required under RCRA.

RCRA-CESQG:

Date form received by agency:	06/12/1997
Facility name:	CLAUSING CORP
Facility address:	2019 N PITCHER KALAMAZOO, MI 49007
EPA ID:	MID005319728
Mailing address:	1819 N PITCHER KALAMAZOO, MI 49007
Contact:	BRAD COOMBS
Contact address:	2019 N PITCHER KALAMAZOO, MI 49007
Contact country:	Not reported
Contact telephone:	(616) 345-7155
Contact email:	Not reported
EPA Region:	05
Land type:	Private
Classification:	Conditionally Exempt Small Quantity Generator
Description:	Handler: generates 100 kg or less of hazardous waste per calendar month, and accumulates 1000 kg or less of hazardous waste at any time; or generates 1 kg or less of acutely hazardous waste per calendar month, and accumulates at any time: 1 kg or less of acutely hazardous waste; or 100 kg or less of any residue or contaminated soil, waste or other debris resulting from the cleanup of a spill, into or on any land or water, of acutely hazardous waste; or generates 100 kg or less of any residue or contaminated soil, waste or other debris resulting from the cleanup of a spill, into or on any land or water, of acutely hazardous waste during any calendar month, and accumulates at any time: 1 kg or less of acutely hazardous waste; or 100 kg or less of any residue or contaminated soil, waste or other debris resulting from the cleanup of a spill, into or on any land or water, of acutely hazardous waste

CLAUSING CORP (Continued) **1001202272**

Owner/Operator Summary:

Owner/operator name:	SIX HUNDRED GROUP LTD
Owner/operator address:	Not reported
	Not reported
Owner/operator country:	Not reported
Owner/operator telephone:	Not reported
Legal status:	Private
Owner/Operator Type:	Operator
Owner/Op start date:	01/01/1970
Owner/Op end date:	Not reported

Owner/operator name:	SIX HUNDRED GROUP LTD
Owner/operator address:	Not reported
	Not reported
Owner/operator country:	Not reported
Owner/operator telephone:	Not reported
Legal status:	Private
Owner/Operator Type:	Owner
Owner/Op start date:	01/01/1970
Owner/Op end date:	Not reported

Handler Activities Summary:

U.S. importer of hazardous waste:	No
Mixed waste (haz. and radioactive):	No
Recycler of hazardous waste:	No
Transporter of hazardous waste:	No
Treater, storer or disposer of HW:	No
Underground injection activity:	No
On-site burner exemption:	No
Furnace exemption:	No
Used oil fuel burner:	No
Used oil processor:	No
User oil refiner:	No
Used oil fuel marketer to burner:	No
Used oil Specification marketer:	No
Used oil transfer facility:	No
Used oil transporter:	No
Off-site waste receiver:	Commercial status unknown

Universal Waste Summary:

Waste type:	DEVICES CONTAINING ELEMENTAL MERCURY
Accumulated waste on-site:	No
Generated waste on-site:	No

Waste type:	MERCURY THERMOMETERS
Accumulated waste on-site:	No
Generated waste on-site:	No

Waste type:	MERCURY SWITCHES
Accumulated waste on-site:	No
Generated waste on-site:	No

Waste type:	Batteries
Accumulated waste on-site:	No
Generated waste on-site:	No

CLAUSING CORP (Continued) **1001202272**

Waste type: Lamps
Accumulated waste on-site: No
Generated waste on-site: No

Waste type: Pesticides
Accumulated waste on-site: No
Generated waste on-site: No

Waste type: Thermostats
Accumulated waste on-site: No
Generated waste on-site: No

Violation Status: No violations found

Evaluation Action Summary:
Evaluation date: 05/19/1997
Evaluation: COMPLIANCE EVALUATION INSPECTION ON-SITE
Area of violation: Not reported
Date achieved compliance: Not reported
Evaluation lead agency: State

I35 South 1/2-1 0.560 mi. 2955 ft.

Relative: Higher

Actual: 762 ft.

CHECKER MOTORS CORPORATION
2016 NORTH PITCHER STREET
KALAMAZOO, MI 49007

Site 2 of 3 in cluster I

RCRA-SQG 1000173177
SHWS MID005319009
FINDS
LUST
RCRA-TSDF
UST
CORRACTS
AST
CERC-NFRAP
DEL SHWS
MANIFEST
MANIFEST

RCRA-SQG:
Date form received by agency: 04/24/2006
Facility name: C M C KALAMAZOO INC
Facility address: 2016 N PITCHER ST
KALAMAZOO, MI 49007
EPA ID: MID005319009
Contact: DWAYNE BYXBG
Contact address: 2016 N PITCHER ST
KALAMAZOO, MI 49007
Contact country: Not reported
Contact telephone: (616) 343-6121
Contact email: Not reported
EPA Region: 05
Land type: Private
Classification: TSDF
Description: Handler is engaged in the treatment, storage or disposal of hazardous waste
TSD commencement date: Not reported

Owner/Operator Summary:
Owner/operator name: CHECKER MOTORS CORP
Owner/operator address: Not reported
Not reported
Owner/operator country: Not reported

CHECKER MOTORS CORPORATION (Continued) **1000173177**

Owner/operator telephone: Not reported
Legal status: Private
Owner/Operator Type: Owner
Owner/Op start date: 12/19/1996
Owner/Op end date: Not reported

Owner/operator name: CHECKER MOTORS CORP
Owner/operator address: Not reported
Not reported
Owner/operator country: Not reported
Owner/operator telephone: Not reported
Legal status: Private
Owner/Operator Type: Operator
Owner/Op start date: 12/19/1996
Owner/Op end date: Not reported

Handler Activities Summary:
U.S. importer of hazardous waste: No
Mixed waste (haz. and radioactive): No
Recycler of hazardous waste: No
Transporter of hazardous waste: No
Treater, storer or disposer of HW: No
Underground injection activity: No
On-site burner exemption: No
Furnace exemption: No
Used oil fuel burner: No
Used oil processor: No
User oil refiner: No
Used oil fuel marketer to burner: No
Used oil Specification marketer: No
Used oil transfer facility: No
Used oil transporter: No
Off-site waste receiver: Commercial status unknown

Universal Waste Summary:
Waste type: DEVICES CONTAINING ELEMENTAL MERCURY
Accumulated waste on-site: No
Generated waste on-site: No

Waste type: MERCURY THERMOMETERS
Accumulated waste on-site: No
Generated waste on-site: No

Waste type: MERCURY SWITCHES
Accumulated waste on-site: No
Generated waste on-site: No

Waste type: Batteries
Accumulated waste on-site: No
Generated waste on-site: No

Waste type: Lamps
Accumulated waste on-site: No
Generated waste on-site: No

Waste type: Pesticides

CHECKER MOTORS CORPORATION (Continued) **1000173177**

Accumulated waste on-site: No
Generated waste on-site: No

Waste type: Thermostats
Accumulated waste on-site: No
Generated waste on-site: No

Historical Generators:
Date form received by agency: 09/10/2002
Facility name: C M C KALAMAZOO INC
Classification: Small Quantity Generator

Date form received by agency: 07/28/1995
Facility name: C M C KALAMAZOO INC
Classification: Small Quantity Generator

Date form received by agency: 03/06/1992
Facility name: C M C KALAMAZOO INC
Site name: CHECKER MOTORS CORP
Classification: Large Quantity Generator

Date form received by agency: 02/28/1990
Facility name: C M C KALAMAZOO INC
Site name: CHECKER MOTORS CORP
Classification: Large Quantity Generator

Date form received by agency: 12/19/1980
Facility name: C M C KALAMAZOO INC
Classification: Small Quantity Generator

Date form received by agency: 09/15/1980
Facility name: C M C KALAMAZOO INC
Classification: Small Quantity Generator

Corrective Action Summary:
Event date: 12/16/1991
Event: RFA Completed

Event date: 03/31/1992
Event: CA Prioritization, Facility or area was assigned a medium corrective action priority.

Event date: 06/19/1992
Event: Stabilization Measures Evaluation,This facility is not amenable to stabilization activity because of a lack of technical data. An evaluation has been completed, but further data is necessary to determine stabilization measures, feasibility or appropriateness. This status should be changed when data becomes available.

Facility Has Received Notices of Violations:
Regulation violated: Not reported
Area of violation: Generators - General
Date violation determined: 11/30/2004
Date achieved compliance: 01/17/2005
Violation lead agency: State
Enforcement action: WRITTEN INFORMAL

CHECKER MOTORS CORPORATION (Continued) **1000173177**

Enforcement action date: 12/10/2004
Enf. disposition status: Not reported
Enf. disp. status date: Not reported
Enforcement lead agency: State
Proposed penalty amount: Not reported
Final penalty amount: Not reported
Paid penalty amount: Not reported

Regulation violated: Not reported
Area of violation: Permits - Conditions
Date violation determined: 12/18/2001
Date achieved compliance: Not reported
Violation lead agency: State
Enforcement action: WRITTEN INFORMAL
Enforcement action date: 12/18/2001
Enf. disposition status: Not reported
Enf. disp. status date: Not reported
Enforcement lead agency: State
Proposed penalty amount: Not reported
Final penalty amount: Not reported
Paid penalty amount: Not reported

Regulation violated: Not reported
Area of violation: Generators - General
Date violation determined: 09/13/1996
Date achieved compliance: 09/26/1996
Violation lead agency: State
Enforcement action: WRITTEN INFORMAL
Enforcement action date: 09/13/1996
Enf. disposition status: Not reported
Enf. disp. status date: Not reported
Enforcement lead agency: State
Proposed penalty amount: Not reported
Final penalty amount: Not reported
Paid penalty amount: Not reported

Regulation violated: Not reported
Area of violation: LDR - General
Date violation determined: 12/18/1991
Date achieved compliance: 08/21/1996
Violation lead agency: State
Enforcement action: WRITTEN INFORMAL
Enforcement action date: 01/03/1992
Enf. disposition status: Not reported
Enf. disp. status date: Not reported
Enforcement lead agency: State
Proposed penalty amount: Not reported
Final penalty amount: Not reported
Paid penalty amount: Not reported

Regulation violated: Not reported
Area of violation: Generators - General
Date violation determined: 12/18/1991
Date achieved compliance: 08/21/1996
Violation lead agency: State
Enforcement action: WRITTEN INFORMAL
Enforcement action date: 01/03/1992

CHECKER MOTORS CORPORATION (Continued) **1000173177**

Enf. disposition status: Not reported
Enf. disp. status date: Not reported
Enforcement lead agency: State
Proposed penalty amount: Not reported
Final penalty amount: Not reported
Paid penalty amount: Not reported

Regulation violated: Not reported
Area of violation: Generators - General
Date violation determined: 02/16/1989
Date achieved compliance: 09/25/1989
Violation lead agency: State
Enforcement action: WRITTEN INFORMAL
Enforcement action date: 02/21/1989
Enf. disposition status: Not reported
Enf. disp. status date: Not reported
Enforcement lead agency: State
Proposed penalty amount: Not reported
Final penalty amount: Not reported
Paid penalty amount: Not reported

Evaluation Action Summary:
Evaluation date: 11/30/2004
Evaluation: COMPLIANCE EVALUATION INSPECTION ON-SITE
Area of violation: Generators - General
Date achieved compliance: 01/17/2005
Evaluation lead agency: State

Evaluation date: 12/18/2001
Evaluation: NON-FINANCIAL RECORD REVIEW
Area of violation: Permits - Conditions
Date achieved compliance: Not reported
Evaluation lead agency: State

Evaluation date: 08/21/1996
Evaluation: COMPLIANCE EVALUATION INSPECTION ON-SITE
Area of violation: Generators - General
Date achieved compliance: 09/26/1996
Evaluation lead agency: State

Evaluation date: 12/18/1991
Evaluation: COMPLIANCE EVALUATION INSPECTION ON-SITE
Area of violation: LDR - General
Date achieved compliance: 08/21/1996
Evaluation lead agency: State

Evaluation date: 12/18/1991
Evaluation: COMPLIANCE EVALUATION INSPECTION ON-SITE
Area of violation: Generators - General
Date achieved compliance: 08/21/1996
Evaluation lead agency: State

Evaluation date: 09/25/1989
Evaluation: COMPLIANCE SCHEDULE EVALUATION
Area of violation: Not reported
Date achieved compliance: Not reported
Evaluation lead agency: State

CHECKER MOTORS CORPORATION (Continued) **1000173177**

Evaluation date: 02/16/1989
Evaluation: COMPLIANCE EVALUATION INSPECTION ON-SITE
Area of violation: Generators - General
Date achieved compliance: 09/25/1989
Evaluation lead agency: State

Evaluation date: 03/06/1985
Evaluation: COMPLIANCE EVALUATION INSPECTION ON-SITE
Area of violation: Not reported
Date achieved compliance: Not reported
Evaluation lead agency: State

SHWS:
Facility ID: 39000444
Source: Motor Vehicle & Car Bodies
SAM Score: 26 out of 48
SAM Score Date: 04/06/2004
Township: 02s
Range: 11w
Section: 10
Quarter: NE
Quarter/Quarter: SW
Facility Status: Inactive - no actions taken to address contamination
Pollutant(s): TCE; cis-1,2 DCE

FINDS:
Other Pertinent Environmental Activity Identified at Site

AFS (Aerometric Information Retrieval System (AIRS) Facility Subsystem) replaces the former Compliance Data System (CDS), the National Emission Data System (NEDS), and the Storage and Retrieval of Aerometric Data (SAROAD). AIRS is the national repository for information concerning airborne pollution in the United States. AFS is used to track emissions and compliance data from industrial plants. AFS data are utilized by states to prepare State Implementation Plans to comply with regulatory programs and by EPA as an input for the estimation of total national emissions. AFS is undergoing a major redesign to support facility operating permits required under Title V of the Clean Air Act.

NCDB (National Compliance Data Base) supports implementation of the Federal Insecticide, Fungicide, and Rodenticide Act (FIFRA) and the Toxic Substances Control Act (TSCA). The system tracks inspections in regions and states with cooperative agreements, enforcement actions, and settlements.

TRIS (Toxics Release Inventory System) contains information from facilities on the amounts of over 300 listed toxic chemicals that these facilities release directly to air, water, land, or that are transported off-site.

The NEI (National Emissions Inventory) database contains information on stationary and mobile sources that emit criteria air pollutants and their precursors, as well as hazardous air pollutants (HAPs).

RCRAInfo is a national information system that supports the Resource

CHECKER MOTORS CORPORATION (Continued) **1000173177**

Conservation and Recovery Act (RCRA) program through the tracking of events and activities related to facilities that generate, transport, and treat, store, or dispose of hazardous waste. RCRAInfo allows RCRA program staff to track the notification, permit, compliance, and corrective action activities required under RCRA.

PCS (Permit Compliance System) is a computerized management information system that contains data on National Pollutant Discharge Elimination System (NPDES) permit holding facilities. PCS tracks the permit, compliance, and enforcement status of NPDES facilities.

LUST:

Facility ID:	00002813
Source:	STATE OF MICHIGAN
Owner Name:	Checker Motors Corp
Owner Address:	2016 N Pitcher St
Owner City,St,Zip:	Kalamazoo, MI 49007-1869
Owner Contact:	Not reported
Owner Phone:	(269) 343-6121
Country:	USA
District:	Kalamazoo District Office
Site Name:	Checker Motors Corporation
Latitude:	42.3103530000
Longitude:	-85.5797210000
Date of Collection:	30-09-2005
Method of Collection:	Interpolation-Map
Accuracy:	15
Accuracy Value Unit:	METERS
Horizontal Data:	NAD83
Point Line Area:	POINT
Desc Category:	Not reported
Leak Number:	C-0421-04
Release Date:	Sep 29 2004
Substance Released:	Other,Other
Release Status:	Closed
Release Closed Date:	Mar 19 2007
Leak Number:	C-2534-90
Release Date:	Nov 27 1990
Substance Released:	Not reported
Release Status:	Closed
Release Closed Date:	Aug 11 1992
Leak Number:	C-2557-90
Release Date:	Dec 4 1990
Substance Released:	Not reported
Release Status:	Closed
Release Closed Date:	Aug 11 1992
Leak Number:	C-2731-91
Release Date:	Dec 27 1992
Substance Released:	Unknown,Unknown
Release Status:	Closed
Release Closed Date:	Oct 17 1995

CHECKER MOTORS CORPORATION (Continued) **1000173177**

UST:

Facility ID:	00002813
Facility Type:	ACTIVE
Latitude:	42.3103530000
Longitude:	-85.5797210000
Owner Name:	Checker Motors Corp
Owner Address:	2016 N Pitcher St
Owner City,St,Zip:	Kalamazoo, MI 49007-1869
Owner Country:	USA
Owner Contact:	Not reported
Owner Phone:	(269) 343-6121
Contact:	Richard Rumbaugh
Contact Phone:	(231) 343-6121
Date of Collection:	30-09-2005
Accuracy:	15
Accuracy Value Unit:	METERS
Horizontal Datum:	NAD83
Source:	STATE OF MICHIGAN
Point Line Area:	POINT
Desc Category:	Not reported
Method of Collection:	Interpolation-Map

Tank ID:	1
Tank Status:	**Temporarily out of Use**
Capacity:	40000
Install Date:	May 8 1968
Product:	#6 Fuel/Oil
Remove Date:	Not reported
Tank Release Detection:	Not reported
Pipe Realease Detection:	Not reported
Piping Material:	Bare Steel
Piping Type:	Gravity Fed?
Constr Material:	Asphalt Coated or Bare Steel
Impressed Device:	No

Tank ID:	2
Tank Status:	**Removed from Ground**
Capacity:	20000
Install Date:	May 8 1968
Product:	#6 Fuel/Oil
Remove Date:	Nov 8 1990
Tank Release Detection:	Not reported
Pipe Realease Detection:	Not reported
Piping Material:	Bare Steel
Piping Type:	Gravity Fed?,Suction: No Valve At Tank
Constr Material:	Asphalt Coated or Bare Steel
Impressed Device:	No

Tank ID:	3
Tank Status:	**Removed from Ground**
Capacity:	30000
Install Date:	Jan 1 1977
Product:	Hazardous Substance
Remove Date:	Nov 8 1990
Tank Release Detection:	Not reported

CHECKER MOTORS CORPORATION (Continued) **1000173177**

Pipe Realease Detection: Not reported
Piping Material: Bare Steel
Piping Type: Gravity Fed?,Suction: No Valve At Tank
Constr Material: Asphalt Coated or Bare Steel
Impressed Device: No

Tank ID: 4
Tank Status: Removed from Ground
Capacity: 1100
Install Date: May 9 1971
Product: Gasoline
Remove Date: Dec 18 1991
Tank Release Detection: Not reported
Pipe Realease Detection: Not reported
Piping Material: Unknown
Piping Type: Gravity Fed?,Suction: No Valve At Tank
Constr Material: Unknown
Impressed Device: No

Tank ID: 5
Tank Status: Removed from Ground
Capacity: 5000
Install Date: Jan 1 1977
Product: Gasoline
Remove Date: Dec 4 1990
Tank Release Detection: Not reported
Pipe Realease Detection: Not reported
Piping Material: Bare Steel
Piping Type: Gravity Fed?,Suction: No Valve At Tank
Constr Material: Asphalt Coated or Bare Steel
Impressed Device: No

Tank ID: 6
Tank Status: Removed from Ground
Capacity: 1000
Install Date: Jan 1 1977
Product: Hazardous Substance
Remove Date: Nov 8 1990
Tank Release Detection: Not reported
Pipe Realease Detection: Not reported
Piping Material: Bare Steel
Piping Type: Gravity Fed?,Suction: No Valve At Tank
Constr Material: Asphalt Coated or Bare Steel
Impressed Device: No

CORRACTS:

EPA ID: MID005319009
EPA Region: 05
Area Name: ENTIRE FACILITY
Actual Date: 3/31/1992
Action: CA075ME - CA Prioritization, Facility or area was assigned a medium corrective action priority

CHECKER MOTORS CORPORATION (Continued) **1000173177**

NAICS Code(s): 33637
Motor Vehicle Metal Stamping
Original schedule date: Not reported
Schedule end date: Not reported

EPA ID: MID005319009
EPA Region: 05
Area Name: ENTIRE FACILITY
Actual Date: 6/19/1992
Action: CA225IN - Stabilization Measures Evaluation, This facility is not, amenable to stabilization activity because of, a lack of technical data. An evaluation has been completed, but further data is necessary to determine stabilization measures, feasibility or appropriateness. This status should be changed when data becomes available
NAICS Code(s): 33637
Motor Vehicle Metal Stamping
Original schedule date: Not reported
Schedule end date: Not reported

EPA ID: MID005319009
EPA Region: 05
Area Name: ENTIRE FACILITY
Actual Date: 12/16/1991
Action: CA050 - RFA Completed
NAICS Code(s): 33637
Motor Vehicle Metal Stamping
Original schedule date: Not reported
Schedule end date: Not reported

AST:
Type: ACTIVE
Owner Name: Amerigas
Owner Address: 1600 King Hwy
Owner City,St,Zip: Kalamazoo, MI 49001-3154
Owner County: USA
Owner Contact: Not reported
Owner Telephone: (269) 342-1402
Facility ID: 92039115
District: Kalamazoo District Office
Contact: DAVE HILLMAN
Facility Phone: (616) 343-6121
Tank ID: 1
Tank Status: Currently In Use
Capacity: 1000
Install Date: Nov 30 1981
Content: Liquid Propane Gas
Close Date: Not reported

Type: ACTIVE
Owner Name: Amerigas
Owner Address: 1600 King Hwy
Owner City,St,Zip: Kalamazoo, MI 49001-3154
Owner County: USA
Owner Contact: Not reported
Owner Telephone: (269) 342-1402
Facility ID: 92039115
District: Kalamazoo District Office

CHECKER MOTORS CORPORATION (Continued) **1000173177**

Contact: DAVE HILLMAN
Facility Phone: (616) 343-6121
Tank ID: 2
Tank Status: Currently In Use
Capacity: 1000
Install Date: Nov 30 1981
Content: Liquid Propane Gas
Close Date: Not reported

CERC-NFRAP:
Site ID: 0507218
Federal Facility: Not a Federal Facility
NPL Status: Not on the NPL
Non NPL Status: Deferred to RCRA

CERCLIS-NFRAP Site Alias Name(s):
Alias Name: CMC KALAMAZOO INC
Alias Address: Not reported
Not reported
Site Description: Not reported

CERCLIS-NFRAP Assessment History:
Action: DISCOVERY
Date Started: Not reported
Date Completed: 10/07/1991
Priority Level: Not reported

Action: PRELIMINARY ASSESSMENT
Date Started: Not reported
Date Completed: 03/19/1993
Priority Level: Deferred to RCRA (Subtitle C)

Action: ARCHIVE SITE
Date Started: Not reported
Date Completed: 12/12/1996
Priority Level: Not reported

DELETED HWS:
Facility ID: 39000148
Status: Deleted - available documentation does not support listing

Facility ID: 39000214
Status: Deleted - available documentation does not support listing

NY MANIFEST:
EPA ID: MID005319009
Facility Name: CHECKER MOTORS CORPORATION
Facility Address: 2016 NORTH MAIN STREET
Facility City: KALAMAZOO
Facility Address 2: Not reported
Country: USA
Mailing Name: CHECKER MOTORS CORPORATION
Mailing Contact: CHECKER MOTORS CORPORATION
Mailing Address: 2016 NORTH PITCHER STREET
Mailing Address 2: Not reported
Mailing City: KALAMAZOO

CHECKER MOTORS CORPORATION (Continued) **1000173177**

Mailing State:	MI
Mailing Zip:	49007
Mailing Zip4:	Not reported
Mailing Country:	USA
Mailing Phone:	616-343-6221

Document ID:	NYA5304726
Manifest Status:	Completed copy
Trans1 State ID:	66000S
Trans2 State ID:	Not reported
Generator Ship Date:	870520
Trans1 Recv Date:	870520
Trans2 Recv Date:	Not reported
TSD Site Recv Date:	870521
Part A Recv Date:	870527
Part B Recv Date:	870527
Generator EPA ID:	MID005319009
Trans1 EPA ID:	MID017167222
Trans2 EPA ID:	Not reported
TSDF ID:	NYD049836679
Waste Code:	B007 - OTHER MISCELLANEOUS PCB WASTES
Quantity:	17320
Units:	P - Pounds
Number of Containers:	001
Container Type:	CM - Metal boxes, cases, roll-offs
Handling Method:	L Landfill.
Specific Gravity:	100
Year:	87
Manifest Tracking Num:	Not reported
Import Ind:	Not reported
Export Ind:	Not reported
Discr Quantity Ind:	Not reported
Discr Type Ind:	Not reported
Discr Residue Ind:	Not reported
Discr Partial Reject Ind:	Not reported
Discr Full Reject Ind:	Not reported
Manifest Ref Num:	Not reported
Alt Fac RCRA Id:	Not reported
Alt Fac Sign Date:	Not reported
Mgmt Method Type Code:	Not reported

Document ID:	NYA5304582
Manifest Status:	Completed copy
Trans1 State ID:	MI660005
Trans2 State ID:	Not reported
Generator Ship Date:	870511
Trans1 Recv Date:	870511
Trans2 Recv Date:	Not reported
TSD Site Recv Date:	870512
Part A Recv Date:	870518
Part B Recv Date:	870518
Generator EPA ID:	MID005319009
Trans1 EPA ID:	MID017167222
Trans2 EPA ID:	Not reported
TSDF ID:	NYD049836679

CHECKER MOTORS CORPORATION (Continued) **1000173177**

Waste Code:	B007 - OTHER MISCELLANEOUS PCB WASTES
Quantity:	18380
Units:	P - Pounds
Number of Containers:	001
Container Type:	CM - Metal boxes, cases, roll-offs
Handling Method:	L Landfill.
Specific Gravity:	100
Year:	87
Manifest Tracking Num:	Not reported
Import Ind:	Not reported
Export Ind:	Not reported
Discr Quantity Ind:	Not reported
Discr Type Ind:	Not reported
Discr Residue Ind:	Not reported
Discr Partial Reject Ind:	Not reported
Discr Full Reject Ind:	Not reported
Manifest Ref Num:	Not reported
Alt Fac RCRA Id:	Not reported
Alt Fac Sign Date:	Not reported
Mgmt Method Type Code:	Not reported

Document ID:	NYA5304591
Manifest Status:	Completed copy
Trans1 State ID:	66000S
Trans2 State ID:	Not reported
Generator Ship Date:	870513
Trans1 Recv Date:	870513
Trans2 Recv Date:	Not reported
TSD Site Recv Date:	870514
Part A Recv Date:	870518
Part B Recv Date:	870519
Generator EPA ID:	MID005319009
Trans1 EPA ID:	MID017167222
Trans2 EPA ID:	Not reported
TSDF ID:	NYD049836679
Waste Code:	B007 - OTHER MISCELLANEOUS PCB WASTES
Quantity:	26800
Units:	P - Pounds
Number of Containers:	001
Container Type:	CM - Metal boxes, cases, roll-offs
Handling Method:	L Landfill.
Specific Gravity:	100
Year:	87
Manifest Tracking Num:	Not reported
Import Ind:	Not reported
Export Ind:	Not reported
Discr Quantity Ind:	Not reported
Discr Type Ind:	Not reported
Discr Residue Ind:	Not reported
Discr Partial Reject Ind:	Not reported
Discr Full Reject Ind:	Not reported
Manifest Ref Num:	Not reported
Alt Fac RCRA Id:	Not reported
Alt Fac Sign Date:	Not reported
Mgmt Method Type Code:	Not reported

CHECKER MOTORS CORPORATION (Continued) **1000173177**

Document ID:	NYA5304609
Manifest Status:	Completed copy
Trans1 State ID:	66000SM1
Trans2 State ID:	Not reported
Generator Ship Date:	870518
Trans1 Recv Date:	870518
Trans2 Recv Date:	Not reported
TSD Site Recv Date:	870519
Part A Recv Date:	870527
Part B Recv Date:	870522
Generator EPA ID:	MID005319009
Trans1 EPA ID:	MID017167222
Trans2 EPA ID:	Not reported
TSDF ID:	NYD049836679
Waste Code:	B007 - OTHER MISCELLANEOUS PCB WASTES
Quantity:	23320
Units:	P - Pounds
Number of Containers:	001
Container Type:	CM - Metal boxes, cases, roll-offs
Handling Method:	L Landfill.
Specific Gravity:	100
Year:	87
Manifest Tracking Num:	Not reported
Import Ind:	Not reported
Export Ind:	Not reported
Discr Quantity Ind:	Not reported
Discr Type Ind:	Not reported
Discr Residue Ind:	Not reported
Discr Partial Reject Ind:	Not reported
Discr Full Reject Ind:	Not reported
Manifest Ref Num:	Not reported
Alt Fac RCRA Id:	Not reported
Alt Fac Sign Date:	Not reported
Mgmt Method Type Code:	Not reported

WI MANIFEST:

Year:	04
EPA ID:	MID005319009
FID:	0
ACT Code:	202
ACT Status:	A
ACT Code 1:	202
ACT Name:	HW Generator - Small
Contact First Name:	Not reported
Contact Last Name:	Not reported
Contact Title:	Not reported
Contact Address:	Not reported
Contact State:	Not reported
Contact City:	Not reported
Contact Zip:	Not reported
Contact Telephone:	Not reported
Contact Extention:	Not reported
Contact Email Address:	Not reported
WI MANIFEST SHIP:	-
Manifest DOC ID:	0
Copy Type:	3
Gen EPA ID:	MID005319009

CHECKER MOTORS CORPORATION (Continued) **1000173177**

Gen Date:	08/13/2004
TSD Date:	08/23/2004
TSD EPA ID:	WID003967148
GEN Copy Revd Date:	9/28/2004
TSG Copy Revd Date:	09/30/2004
Manifest DOC ID:	Not reported
Waste Page No:	Not reported
Waste Line No:	Not reported
Waste Code:	Not reported
Waste Amount:	Not reported
Unit of Measure:	Not reported
Waste LBS:	Not reported

Manifest DOC ID:	WIK529109
Copy Type:	TSDCOPY
Gen EPA ID:	MID005319009
Gen Date:	05/09/06
TSD Date:	06/25/06
TSD EPA ID:	WID003967148
GEN Copy Revd Date:	5/30/2006
TSG Copy Revd Date:	07/03/06
Manifest DOC ID:	WIK529109
Waste Page No:	1
Waste Line No:	1
Waste Code:	F003
Waste Amount:	Not reported
Unit of Measure:	G
Waste LBS:	Not reported
Manifest DOC ID:	WIK529109
Waste Page No:	1
Waste Line No:	4
Waste Code:	F003
Waste Amount:	55
Unit of Measure:	G
Waste LBS:	458

Manifest DOC ID:	0
Copy Type:	3
Gen EPA ID:	MID005319009
Gen Date:	08/13/2004
TSD Date:	09/01/2004
TSD EPA ID:	WID988566543
GEN Copy Revd Date:	9/28/2004
TSG Copy Revd Date:	09/17/2004
Manifest DOC ID:	Not reported
Waste Page No:	Not reported
Waste Line No:	Not reported
Waste Code:	Not reported
Waste Amount:	Not reported
Unit of Measure:	Not reported
Waste LBS:	Not reported

WI MANIFEST TRANS:	-
Mifest DOC ID:	Not reported
TRAN EPA ID:	Not reported
TRAN ORDER NO:	Not reported
TRAN Date:	Not reported

CHECKER MOTORS CORPORATION (Continued) **1000173177**

Manifest DOC ID:	Not reported
Waste Page No:	Not reported
Waste Line No:	Not reported
Waste Code:	Not reported
Waste Amount:	Not reported
Unit of Measure:	Not reported
Waste LBS:	Not reported

Year:	06
EPA ID:	MID005319009
FID:	0
ACT Code:	202
ACT Status:	A
ACT Code 1:	202
ACT Name:	HW Generator - Small
Contact First Name:	Not reported
Contact Last Name:	Not reported
Contact Title:	Not reported
Contact Address:	Not reported
Contact State:	Not reported
Contact City:	Not reported
Contact Zip:	Not reported
Contact Telephone:	Not reported
Contact Extention:	Not reported
Contact Email Address:	Not reported
WI MANIFEST SHIP:	-
Manifest DOC ID:	0
Copy Type:	3
Gen EPA ID:	MID005319009
Gen Date:	08/13/2004
TSD Date:	08/23/2004
TSD EPA ID:	WID003967148
GEN Copy Revd Date:	9/28/2004
TSG Copy Revd Date:	09/30/2004
Manifest DOC ID:	Not reported
Waste Page No:	Not reported
Waste Line No:	Not reported
Waste Code:	Not reported
Waste Amount:	Not reported
Unit of Measure:	Not reported
Waste LBS:	Not reported

Manifest DOC ID:	WIK529109
Copy Type:	TSDCOPY
Gen EPA ID:	MID005319009
Gen Date:	05/09/06
TSD Date:	06/25/06
TSD EPA ID:	WID003967148
GEN Copy Revd Date:	5/30/2006
TSG Copy Revd Date:	07/03/06
Manifest DOC ID:	WIK529109
Waste Page No:	1
Waste Line No:	1
Waste Code:	F003
Waste Amount:	Not reported
Unit of Measure:	G

CHECKER MOTORS CORPORATION (Continued) **1000173177**

Waste LBS:	Not reported
Manifest DOC ID:	WIK529109
Waste Page No:	1
Waste Line No:	4
Waste Code:	F003
Waste Amount:	55
Unit of Measure:	G
Waste LBS:	458

Manifest DOC ID:	0
Copy Type:	3
Gen EPA ID:	MID005319009
Gen Date:	08/13/2004
TSD Date:	09/01/2004
TSD EPA ID:	WID988566543
GEN Copy Revd Date:	9/28/2004
TSG Copy Revd Date:	09/17/2004
Manifest DOC ID:	Not reported
Waste Page No:	Not reported
Waste Line No:	Not reported
Waste Code:	Not reported
Waste Amount:	Not reported
Unit of Measure:	Not reported
Waste LBS:	Not reported

WI MANIFEST TRANS:	-
Mifest DOC ID:	Not reported
TRAN EPA ID:	Not reported
TRAN ORDER NO:	Not reported
TRAN Date:	Not reported

Manifest DOC ID:	Not reported
Waste Page No:	Not reported
Waste Line No:	Not reported
Waste Code:	Not reported
Waste Amount:	Not reported
Unit of Measure:	Not reported
Waste LBS:	Not reported

I36 **CHECKER MOTORS CORP WAX AND MINERAL SPIR** **DEL SHWS** **S106508488**
South **2016 N PITCHER ST.** **N/A**
1/2-1 **KALAMAZOO, MI 49007**
0.560 mi.
2955 ft. **Site 3 of 3 in cluster I**

Relative:
Higher

Actual:
762 ft.

DELETED HWS:

Facility ID:	39000149
Status:	Deleted - available documentation does not support listing

37 South 1/2-1 0.673 mi. 3552 ft. | **SUN CHEMICAL CORP-GPI DIV**
1807 N PITCHER STREET
KALAMAZOO, MI 49001 | **FINDS**
CORRACTS
CERC-NFRAP
RCRA-NonGen | **1000106682**
MID044254563

Relative: Higher

Actual: 762 ft.

FINDS:
Other Pertinent Environmental Activity Identified at Site

RCRAInfo is a national information system that supports the Resource Conservation and Recovery Act (RCRA) program through the tracking of events and activities related to facilities that generate, transport, and treat, store, or dispose of hazardous waste. RCRAInfo allows RCRA program staff to track the notification, permit, compliance, and corrective action activities required under RCRA.

CORRACTS:

EPA ID: MID044254563
EPA Region: 05
Area Name: ENTIRE FACILITY
Actual Date: 11/13/1991
Action: CA050 - RFA Completed
NAICS Code(s): 32411
Petroleum Refineries
Original schedule date: Not reported
Schedule end date: Not reported

EPA ID: MID044254563
EPA Region: 05
Area Name: ENTIRE FACILITY
Actual Date: 11/13/1991
Action: CA070YE - RFA Determination Of Need For An RFI, RFI is Necessary
NAICS Code(s): 32411
Petroleum Refineries
Original schedule date: Not reported
Schedule end date: Not reported

EPA ID: MID044254563
EPA Region: 05
Area Name: ENTIRE FACILITY
Actual Date: 12/31/1991
Action: CA075LO - CA Prioritization, Facility or area was assigned a low corrective action priority
NAICS Code(s): 32411
Petroleum Refineries
Original schedule date: Not reported
Schedule end date: Not reported

CERC-NFRAP:
Site ID: 0506677
Federal Facility: Not a Federal Facility
NPL Status: Not on the NPL
Non NPL Status: Deferred to RCRA

Site Description: Not reported

SUN CHEMICAL CORP-GPI DIV (Continued) **1000106682**

CERCLIS-NFRAP Assessment History:

Action:	DISCOVERY
Date Started:	Not reported
Date Completed:	05/21/1991
Priority Level:	Not reported
Action:	PRELIMINARY ASSESSMENT
Date Started:	Not reported
Date Completed:	02/18/1992
Priority Level:	Deferred to RCRA (Subtitle C)
Action:	ARCHIVE SITE
Date Started:	Not reported
Date Completed:	12/19/1995
Priority Level:	Not reported

RCRA-NonGen:

Date form received by agency:	11/19/1980
Facility name:	SUN CHEMICAL CORPORATION
Facility address:	1807 N PITCHER ST KALAMAZOO, MI 49001
EPA ID:	MID044254563
Contact:	GARY ANDRZEJEWSKI
Contact address:	1807 N PITCHER ST KALAMAZOO, MI 49001
Contact country:	Not reported
Contact telephone:	(201) 933-4500
Contact email:	Not reported
EPA Region:	05
Classification:	Non-Generator
Description:	Handler: Non-Generators do not presently generate hazardous waste

Owner/Operator Summary:

Owner/operator name:	NO ACTIVE O/OP AS NOT GENERATING WASTE
Owner/operator address:	Not reported Not reported
Owner/operator country:	Not reported
Owner/operator telephone:	Not reported
Legal status:	Private
Owner/Operator Type:	Owner
Owner/Op start date:	01/01/2002
Owner/Op end date:	Not reported
Owner/operator name:	NO ACTIVE O/OP AS NOT GENERATING WASTE
Owner/operator address:	Not reported Not reported
Owner/operator country:	Not reported
Owner/operator telephone:	Not reported
Legal status:	Private
Owner/Operator Type:	Operator
Owner/Op start date:	01/01/2002
Owner/Op end date:	Not reported

Handler Activities Summary:

U.S. importer of hazardous waste: No

SUN CHEMICAL CORP-GPI DIV (Continued) **1000106682**

Mixed waste (haz. and radioactive): No
Recycler of hazardous waste: No
Transporter of hazardous waste: No
Treater, storer or disposer of HW: No
Underground injection activity: No
On-site burner exemption: No
Furnace exemption: No
Used oil fuel burner: No
Used oil processor: No
User oil refiner: No
Used oil fuel marketer to burner: No
Used oil Specification marketer: No
Used oil transfer facility: No
Used oil transporter: No
Off-site waste receiver: Commercial status unknown

Universal Waste Summary:
Waste type: DEVICES CONTAINING ELEMENTAL MERCURY
Accumulated waste on-site: No
Generated waste on-site: No

Waste type: MERCURY THERMOMETERS
Accumulated waste on-site: No
Generated waste on-site: No

Waste type: MERCURY SWITCHES
Accumulated waste on-site: No
Generated waste on-site: No

Waste type: Batteries
Accumulated waste on-site: No
Generated waste on-site: No

Waste type: Lamps
Accumulated waste on-site: No
Generated waste on-site: No

Waste type: Pesticides
Accumulated waste on-site: No
Generated waste on-site: No

Waste type: Thermostats
Accumulated waste on-site: No
Generated waste on-site: No

Historical Generators:
Date form received by agency: 08/12/1980
Facility name: SUN CHEMICAL CORPORATION
Classification: Not a generator, verified

Corrective Action Summary:
Event date: 11/13/1991
Event: RFA Completed

Event date: 11/13/1991
Event: RFA Determination Of Need For An RFI, RFI is Necessary;

SUN CHEMICAL CORP-GPI DIV (Continued) **1000106682**

Event date: 12/31/1991
Event: CA Prioritization, Facility or area was assigned a low corrective action priority.

Violation Status: No violations found

38
NE
1/2-1
0.759 mi.
4007 ft.

Relative:
Higher

Actual:
775 ft.

CROWN PAPER COMPANY CROWN VANTAGE DBA
100 ISLAND AVENUE
PARCHMENT, MI 49004

PADS **1000221477**
SHWS **MID000810622**
FINDS
LUST
SWF/LF
RCRA-NonGen

SHWS:

Facility ID:	39000070
Source:	null
SAM Score:	41 out of 48
SAM Score Date:	03/31/2004
Township:	null
Range:	null
Section:	null
Quarter:	null
Quarter/Quarter:	null
Facility Status:	**Interim Response in progress**
Pollutant(s):	As; Pb; PCE; TCE; Zn; Hg

FINDS:

Other Pertinent Environmental Activity Identified at Site

Not reported

AFS (Aerometric Information Retrieval System (AIRS) Facility Subsystem) replaces the former Compliance Data System (CDS), the National Emission Data System (NEDS), and the Storage and Retrieval of Aerometric Data (SAROAD). AIRS is the national repository for information concerning airborne pollution in the United States. AFS is used to track emissions and compliance data from industrial plants. AFS data are utilized by states to prepare State Implementation Plans to comply with regulatory programs and by EPA as an input for the estimation of total national emissions. AFS is undergoing a major redesign to support facility operating permits required under Title V of the Clean Air Act.

TRIS (Toxics Release Inventory System) contains information from facilities on the amounts of over 300 listed toxic chemicals that these facilities release directly to air, water, land, or that are transported off-site.

The NEI (National Emissions Inventory) database contains information on stationary and mobile sources that emit criteria air pollutants and their precursors, as well as hazardous air pollutants (HAPs).

RCRAInfo is a national information system that supports the Resource Conservation and Recovery Act (RCRA) program through the tracking of events and activities related to facilities that generate, transport, and treat, store, or dispose of hazardous waste. RCRAInfo allows RCRA program staff to track the notification, permit, compliance, and

CROWN PAPER COMPANY CROWN VANTAGE DBA (Continued) **1000221477**

corrective action activities required under RCRA.

ICIS (Integrated Compliance Information System) is the Integrated Compliance Information System and provides a database that, when complete, will contain integrated Enforcement and Compliance information across most of EPA's programs. The vision for ICIS is to replace EPA's independent databases that contain Enforcement data with a single repository for that information. Currently, ICIS contains all Federal Administrative and Judicial enforcement actions. This information is maintained in ICIS by EPA in the Regional offices and its Headquarters. A future release of ICIS will replace the Permit Compliance System (PCS) which supports the NPDES and will integrate that information with Federal actions already in the system. ICIS also has the capability to track other activities occurring in the Region that support Compliance and Enforcement programs. These include; Incident Tracking, Compliance Assistance, and Compliance Monitoring.

LUST:

Facility ID:	00013420
Source:	STATE OF MICHIGAN
Owner Name:	Crown Paper Co
Owner Address:	100 Island Ave
Owner City,St,Zip:	Parchment, MI 49004-1336
Owner Contact:	Not reported
Owner Phone:	(616) 384-6514
Country:	USA
District:	Kalamazoo District Office
Site Name:	James River KVP/Crown Vantage
Latitude:	42.3280550000
Longitude:	-85.5722220000
Date of Collection:	01-02-2006
Method of Collection:	Interpolation-Map
Accuracy:	100
Accuracy Value Unit:	FEET
Horizontal Data:	NAD83
Point Line Area:	POINT
Desc Category:	Plant Entrance (Freight)
Leak Number:	C-0439-97
Release Date:	Jun 16 1997
Substance Released:	Gasoline
Release Status:	Open
Release Closed Date:	Not reported
Leak Number:	C-1228-85
Release Date:	Apr 28 1998
Substance Released:	Not reported
Release Status:	Open
Release Closed Date:	Not reported

SWF/LF:

Facility ID:	392848
Specific Name:	CROWN PAPER CO DBA CROWN VANTAGE
Mailing Address:	100 ISLAND AVE
Mailing City:	PARCHMENT
Mailing State:	MI

CROWN PAPER COMPANY CROWN VANTAGE DBA (Continued) **1000221477**

Contact Info: (none listed)
Operating Co.: Not reported
Operator Contact: ELIZABETH HOWARD -- (616) 384-6514
Disposal Status: Type III Industrial Waste Landfill
Disposal Type: Post-Closure

RCRA-NonGen:

Date form received by agency:	06/04/2002
Facility name:	CROWN PAPER COMPANY
Facility address:	100 ISLAND AVE PARCHMENT, MI 49004
EPA ID:	MID000810622
Contact:	ELIZABETH HOWARD
Contact address:	100 ISLAND AVE PARCHMENT, MI 49004
Contact country:	Not reported
Contact telephone:	(616) 384-6514
Contact email:	Not reported
EPA Region:	05
Land type:	Other land type
Classification:	Non-Generator
Description:	Handler: Non-Generators do not presently generate hazardous waste

Owner/Operator Summary:

Owner/operator name:	NO ACTIVE O/OP AS NOT GENERATING WASTE
Owner/operator address:	Not reported Not reported
Owner/operator country:	Not reported
Owner/operator telephone:	Not reported
Legal status:	Private
Owner/Operator Type:	Owner
Owner/Op start date:	11/02/2000
Owner/Op end date:	Not reported

Owner/operator name:	NO ACTIVE O/OP AS NOT GENERATING WASTE
Owner/operator address:	Not reported Not reported
Owner/operator country:	Not reported
Owner/operator telephone:	Not reported
Legal status:	Private
Owner/Operator Type:	Operator
Owner/Op start date:	11/02/2000
Owner/Op end date:	Not reported

Handler Activities Summary:

U.S. importer of hazardous waste:	No
Mixed waste (haz. and radioactive):	No
Recycler of hazardous waste:	No
Transporter of hazardous waste:	No
Treater, storer or disposer of HW:	No
Underground injection activity:	No
On-site burner exemption:	No
Furnace exemption:	No
Used oil fuel burner:	No
Used oil processor:	No
User oil refiner:	No

CROWN PAPER COMPANY CROWN VANTAGE DBA (Continued) **1000221477**

Used oil fuel marketer to burner: No
Used oil Specification marketer: No
Used oil transfer facility: No
Used oil transporter: No
Off-site waste receiver: Commercial status unknown

Universal Waste Summary:
Waste type: DEVICES CONTAINING ELEMENTAL MERCURY
Accumulated waste on-site: No
Generated waste on-site: No

Waste type: MERCURY THERMOMETERS
Accumulated waste on-site: No
Generated waste on-site: No

Waste type: MERCURY SWITCHES
Accumulated waste on-site: No
Generated waste on-site: No

Waste type: Batteries
Accumulated waste on-site: No
Generated waste on-site: No

Waste type: Lamps
Accumulated waste on-site: No
Generated waste on-site: No

Waste type: Pesticides
Accumulated waste on-site: No
Generated waste on-site: No

Waste type: Thermostats
Accumulated waste on-site: No
Generated waste on-site: No

Historical Generators:
Date form received by agency: 12/31/2001
Facility name: CROWN PAPER COMPANY
Classification: Not a generator, verified

Date form received by agency: 02/22/1996
Facility name: CROWN PAPER COMPANY
Site name: CROWN PAPER CO., DBA CROWN VANTAGE
Classification: Large Quantity Generator

Date form received by agency: 02/22/1994
Facility name: CROWN PAPER COMPANY
Site name: JAMES RIVER PAPER COMPANY KVP GROUP
Classification: Large Quantity Generator

Date form received by agency: 02/18/1992
Facility name: CROWN PAPER COMPANY
Site name: JAMES RIVER CORP KVP GROUP PAPER DIV
Classification: Large Quantity Generator

Date form received by agency: 03/01/1990

CROWN PAPER COMPANY CROWN VANTAGE DBA (Continued) **1000221477**

Facility name: CROWN PAPER COMPANY
Site name: JAMES RIVER CORP KVP GROUP PAPER DIV
Classification: Large Quantity Generator

Date form received by agency: 08/18/1980
Facility name: CROWN PAPER COMPANY
Classification: Not a generator, verified

Facility Has Received Notices of Violations:
Regulation violated: Not reported
Area of violation: LDR - General
Date violation determined: 05/15/1996
Date achieved compliance: 11/01/1996
Violation lead agency: State
Enforcement action: WRITTEN INFORMAL
Enforcement action date: 05/15/1996
Enf. disposition status: Not reported
Enf. disp. status date: Not reported
Enforcement lead agency: State
Proposed penalty amount: Not reported
Final penalty amount: Not reported
Paid penalty amount: Not reported

Regulation violated: Not reported
Area of violation: Generators - Pre-transport
Date violation determined: 05/15/1996
Date achieved compliance: 11/01/1996
Violation lead agency: State
Enforcement action: WRITTEN INFORMAL
Enforcement action date: 05/15/1996
Enf. disposition status: Not reported
Enf. disp. status date: Not reported
Enforcement lead agency: State
Proposed penalty amount: Not reported
Final penalty amount: Not reported
Paid penalty amount: Not reported

Evaluation Action Summary:
Evaluation date: 05/09/1996
Evaluation: COMPLIANCE EVALUATION INSPECTION ON-SITE
Area of violation: LDR - General
Date achieved compliance: 11/01/1996
Evaluation lead agency: State

Evaluation date: 05/09/1996
Evaluation: COMPLIANCE EVALUATION INSPECTION ON-SITE
Area of violation: Generators - Pre-transport
Date achieved compliance: 11/01/1996
Evaluation lead agency: State

Evaluation date: 09/25/1985
Evaluation: COMPLIANCE EVALUATION INSPECTION ON-SITE
Area of violation: Not reported
Date achieved compliance: Not reported
Evaluation lead agency: State

ORPHAN SUMMARY

City	EDR ID	Site Name	Site Address	Zip	Database(s)
KALAMAZOO	S106521633	341 AND 357 PITCHER ROAD	341 AND 357 PITCHER ROAD		BEA
KALAMAZOO	1004725995	BRONSON PROPERTIES CORP	801 S BURDICK	49007	FINDS, RCRA-NonGen
KALAMAZOO	S105768455	25.45- ACRE PARCEL	NORTH BURDICK		BEA
KALAMAZOO	A100171611	ACERMAN OIL	126 E HIGHWAY	49007	AST
KALAMAZOO	S105144166	KALAMAZOO NO 11 WELLS CITY OF	432 KENDALL AVE	49007	SHWS
KALAMAZOO	S105852897	KALAMAZOO CHARTER TWP	2305 KING'S HWY	49004	LUST
KALAMAZOO	S105144188	MICHIGAN SITE NETWORK	701 EAST MICHIGAN	49007	SHWS, BROWNFIELDS
KALAMAZOO	S100069673	SUTHERLAND FIELD	MILLS STREET / KINGS HWY	49007	HIST LF
KALAMAZOO	A100206822	BUTTERNUT BAKERY	238 MOSEL ST	49007	AST
KALAMAZOO	S107713091	EATON CORPORATION	222 MOSEL		SHWS
KALAMAZOO	S103595227	KALAMAZOO NO 14 WELLS CITY OF	MT OLIVE / GULL ST	49004	SHWS, DEL SHWS
KALAMAZOO	S105144163	ALLIED CHEMICAL CORP IND DEV	511 E PATERSON ST BOX 2798	49007	SHWS
KALAMAZOO	S105144167	PORTAGE AND SECOND ST AREA KAL	631 SECOND ST	49007	SHWS, DEL SHWS

GOVERNMENT RECORDS SEARCHED / DATA CURRENCY TRACKING

To maintain currency of the following federal and state databases, EDR contacts the appropriate governmental agency on a monthly or quarterly basis, as required.

Number of Days to Update: Provides confirmation that EDR is reporting records that have been updated within 90 days from the date the government agency made the information available to the public.

STANDARD ENVIRONMENTAL RECORDS

Federal NPL site list

NPL: National Priority List

National Priorities List (Superfund). The NPL is a subset of CERCLIS and identifies over 1,200 sites for priority cleanup under the Superfund Program. NPL sites may encompass relatively large areas. As such, EDR provides polygon coverage for over 1,000 NPL site boundaries produced by EPA's Environmental Photographic Interpretation Center (EPIC) and regional EPA offices.

Date of Government Version: 09/29/2008
Date Data Arrived at EDR: 10/10/2008
Date Made Active in Reports: 11/19/2008
Number of Days to Update: 40

Source: EPA
Telephone: N/A
Last EDR Contact: 09/29/2008
Next Scheduled EDR Contact: 01/26/2009
Data Release Frequency: Quarterly

NPL Site Boundaries

Sources:

EPA's Environmental Photographic Interpretation Center (EPIC)
Telephone: 202-564-7333

EPA Region 1
Telephone 617-918-1143

EPA Region 6
Telephone: 214-655-6659

EPA Region 3
Telephone 215-814-5418

EPA Region 7
Telephone: 913-551-7247

EPA Region 4
Telephone 404-562-8033

EPA Region 8
Telephone: 303-312-6774

EPA Region 5
Telephone 312-886-6686

EPA Region 9
Telephone: 415-947-4246

EPA Region 10
Telephone 206-553-8665

Proposed NPL: Proposed National Priority List Sites

A site that has been proposed for listing on the National Priorities List through the issuance of a proposed rule in the Federal Register. EPA then accepts public comments on the site, responds to the comments, and places on the NPL those sites that continue to meet the requirements for listing.

Date of Government Version: 09/29/2008
Date Data Arrived at EDR: 10/10/2008
Date Made Active in Reports: 11/19/2008
Number of Days to Update: 40

Source: EPA
Telephone: N/A
Last EDR Contact: 09/29/2008
Next Scheduled EDR Contact: 01/26/2009
Data Release Frequency: Quarterly

NPL LIENS: Federal Superfund Liens

Federal Superfund Liens. Under the authority granted the USEPA by CERCLA of 1980, the USEPA has the authority to file liens against real property in order to recover remedial action expenditures or when the property owner received notification of potential liability. USEPA compiles a listing of filed notices of Superfund Liens.

Date of Government Version: 10/15/1991
Date Data Arrived at EDR: 02/02/1994
Date Made Active in Reports: 03/30/1994
Number of Days to Update: 56

Source: EPA
Telephone: 202-564-4267
Last EDR Contact: 11/17/2008
Next Scheduled EDR Contact: 02/16/2009
Data Release Frequency: No Update Planned

Federal Delisted NPL site list

DELISTED NPL: National Priority List Deletions

The National Oil and Hazardous Substances Pollution Contingency Plan (NCP) establishes the criteria that the EPA uses to delete sites from the NPL. In accordance with 40 CFR 300.425.(e), sites may be deleted from the NPL where no further response is appropriate.

Date of Government Version: 09/29/2008	Source: EPA
Date Data Arrived at EDR: 10/10/2008	Telephone: N/A
Date Made Active in Reports: 11/19/2008	Last EDR Contact: 09/29/2008
Number of Days to Update: 40	Next Scheduled EDR Contact: 01/26/2009
	Data Release Frequency: Quarterly

Federal CERCLIS list

CERCLIS: Comprehensive Environmental Response, Compensation, and Liability Information System

CERCLIS contains data on potentially hazardous waste sites that have been reported to the USEPA by states, municipalities, private companies and private persons, pursuant to Section 103 of the Comprehensive Environmental Response, Compensation, and Liability Act (CERCLA). CERCLIS contains sites which are either proposed to or on the National Priorities List (NPL) and sites which are in the screening and assessment phase for possible inclusion on the NPL.

Date of Government Version: 10/07/2008	Source: EPA
Date Data Arrived at EDR: 10/16/2008	Telephone: 703-412-9810
Date Made Active in Reports: 12/08/2008	Last EDR Contact: 10/16/2008
Number of Days to Update: 53	Next Scheduled EDR Contact: 01/12/2009
	Data Release Frequency: Quarterly

Federal CERCLIS NFRAP site List

CERCLIS-NFRAP: CERCLIS No Further Remedial Action Planned

Archived sites are sites that have been removed and archived from the inventory of CERCLIS sites. Archived status indicates that, to the best of EPA's knowledge, assessment at a site has been completed and that EPA has determined no further steps will be taken to list this site on the National Priorities List (NPL), unless information indicates this decision was not appropriate or other considerations require a recommendation for listing at a later time. This decision does not necessarily mean that there is no hazard associated with a given site; it only means that, based upon available information, the location is not judged to be a potential NPL site.

Date of Government Version: 12/03/2007	Source: EPA
Date Data Arrived at EDR: 12/06/2007	Telephone: 703-412-9810
Date Made Active in Reports: 02/20/2008	Last EDR Contact: 12/15/2008
Number of Days to Update: 76	Next Scheduled EDR Contact: 03/16/2009
	Data Release Frequency: Quarterly

Federal RCRA CORRACTS facilities list

CORRACTS: Corrective Action Report

CORRACTS identifies hazardous waste handlers with RCRA corrective action activity.

Date of Government Version: 09/11/2008	Source: EPA
Date Data Arrived at EDR: 09/19/2008	Telephone: 800-424-9346
Date Made Active in Reports: 10/16/2008	Last EDR Contact: 12/01/2008
Number of Days to Update: 27	Next Scheduled EDR Contact: 03/02/2009
	Data Release Frequency: Quarterly

Federal RCRA non-CORRACTS TSD facilities list

RCRA-TSDF: RCRA - Transporters, Storage and Disposal

RCRAInfo is EPA's comprehensive information system, providing access to data supporting the Resource Conservation and Recovery Act (RCRA) of 1976 and the Hazardous and Solid Waste Amendments (HSWA) of 1984. The database includes selective information on sites which generate, transport, store, treat and/or dispose of hazardous waste as defined by the Resource Conservation and Recovery Act (RCRA). Transporters are individuals or entities that move hazardous waste from the generator offsite to a facility that can recycle, treat, store, or dispose of the waste. TSDFs treat, store, or dispose of the waste.

Date of Government Version: 09/10/2008
Date Data Arrived at EDR: 09/23/2008
Date Made Active in Reports: 10/16/2008
Number of Days to Update: 23

Source: Environmental Protection Agency
Telephone: 312-886-6186
Last EDR Contact: 11/18/2008
Next Scheduled EDR Contact: 02/16/2009
Data Release Frequency: Quarterly

Federal RCRA generators list

RCRA-LQG: RCRA - Large Quantity Generators

RCRAInfo is EPA's comprehensive information system, providing access to data supporting the Resource Conservation and Recovery Act (RCRA) of 1976 and the Hazardous and Solid Waste Amendments (HSWA) of 1984. The database includes selective information on sites which generate, transport, store, treat and/or dispose of hazardous waste as defined by the Resource Conservation and Recovery Act (RCRA). Large quantity generators (LQGs) generate over 1,000 kilograms (kg) of hazardous waste, or over 1 kg of acutely hazardous waste per month.

Date of Government Version: 09/10/2008
Date Data Arrived at EDR: 09/23/2008
Date Made Active in Reports: 10/16/2008
Number of Days to Update: 23

Source: Environmental Protection Agency
Telephone: 312-886-6186
Last EDR Contact: 11/18/2008
Next Scheduled EDR Contact: 02/16/2009
Data Release Frequency: Quarterly

RCRA-SQG: RCRA - Small Quantity Generators

RCRAInfo is EPA's comprehensive information system, providing access to data supporting the Resource Conservation and Recovery Act (RCRA) of 1976 and the Hazardous and Solid Waste Amendments (HSWA) of 1984. The database includes selective information on sites which generate, transport, store, treat and/or dispose of hazardous waste as defined by the Resource Conservation and Recovery Act (RCRA). Small quantity generators (SQGs) generate between 100 kg and 1,000 kg of hazardous waste per month.

Date of Government Version: 09/10/2008
Date Data Arrived at EDR: 09/23/2008
Date Made Active in Reports: 10/16/2008
Number of Days to Update: 23

Source: Environmental Protection Agency
Telephone: 312-886-6186
Last EDR Contact: 11/18/2008
Next Scheduled EDR Contact: 02/16/2009
Data Release Frequency: Quarterly

RCRA-CESQG: RCRA - Conditionally Exempt Small Quantity Generators

RCRAInfo is EPA's comprehensive information system, providing access to data supporting the Resource Conservation and Recovery Act (RCRA) of 1976 and the Hazardous and Solid Waste Amendments (HSWA) of 1984. The database includes selective information on sites which generate, transport, store, treat and/or dispose of hazardous waste as defined by the Resource Conservation and Recovery Act (RCRA). Conditionally exempt small quantity generators (CESQGs) generate less than 100 kg of hazardous waste, or less than 1 kg of acutely hazardous waste per month.

Date of Government Version: 09/10/2008
Date Data Arrived at EDR: 09/23/2008
Date Made Active in Reports: 10/16/2008
Number of Days to Update: 23

Source: Environmental Protection Agency
Telephone: 312-886-6186
Last EDR Contact: 11/18/2008
Next Scheduled EDR Contact: 02/16/2009
Data Release Frequency: Varies

Federal institutional controls / engineering controls registries

US ENG CONTROLS: Engineering Controls Sites List

A listing of sites with engineering controls in place. Engineering controls include various forms of caps, building foundations, liners, and treatment methods to create pathway elimination for regulated substances to enter environmental media or effect human health.

Date of Government Version: 10/06/2008
Date Data Arrived at EDR: 10/17/2008
Date Made Active in Reports: 12/08/2008
Number of Days to Update: 52

Source: Environmental Protection Agency
Telephone: 703-603-0695
Last EDR Contact: 12/29/2008
Next Scheduled EDR Contact: 03/30/2009
Data Release Frequency: Varies

US INST CONTROL: Sites with Institutional Controls

A listing of sites with institutional controls in place. Institutional controls include administrative measures, such as groundwater use restrictions, construction restrictions, property use restrictions, and post remediation care requirements intended to prevent exposure to contaminants remaining on site. Deed restrictions are generally required as part of the institutional controls.

Date of Government Version: 10/06/2008
Date Data Arrived at EDR: 10/17/2008
Date Made Active in Reports: 12/08/2008
Number of Days to Update: 52

Source: Environmental Protection Agency
Telephone: 703-603-0695
Last EDR Contact: 12/29/2008
Next Scheduled EDR Contact: 03/30/2009
Data Release Frequency: Varies

Federal ERNS list

ERNS: Emergency Response Notification System

Emergency Response Notification System. ERNS records and stores information on reported releases of oil and hazardous substances.

Date of Government Version: 12/31/2007
Date Data Arrived at EDR: 01/23/2008
Date Made Active in Reports: 03/17/2008
Number of Days to Update: 54

Source: National Response Center, United States Coast Guard
Telephone: 202-267-2180
Last EDR Contact: 10/21/2008
Next Scheduled EDR Contact: 01/19/2009
Data Release Frequency: Annually

State- and tribal - equivalent CERCLIS

SHWS: Contaminated Sites

State Hazardous Waste Sites. State hazardous waste site records are the states' equivalent to CERCLIS. These sites may or may not already be listed on the federal CERCLIS list. Priority sites planned for cleanup using state funds (state equivalent of Superfund) are identified along with sites where cleanup will be paid for by potentially responsible parties. Available information varies by state.

Date of Government Version: 11/13/2008
Date Data Arrived at EDR: 11/18/2008
Date Made Active in Reports: 11/21/2008
Number of Days to Update: 3

Source: Department of Environmental Quality
Telephone: 517-373-9541
Last EDR Contact: 11/18/2008
Next Scheduled EDR Contact: 02/16/2009
Data Release Frequency: Semi-Annually

State and tribal landfill and/or solid waste disposal site lists

SWF/LF: Solid Waste Facilities Database

Solid Waste Facilities/Landfill Sites. SWF/LF type records typically contain an inventory of solid waste disposal facilities or landfills in a particular state. Depending on the state, these may be active or inactive facilities or open dumps that failed to meet RCRA Subtitle D Section 4004 criteria for solid waste landfills or disposal sites.

Date of Government Version: 11/20/2008
Date Data Arrived at EDR: 11/21/2008
Date Made Active in Reports: 01/06/2009
Number of Days to Update: 46

Source: Department of Environmental Quality
Telephone: 517-335-4035
Last EDR Contact: 11/17/2008
Next Scheduled EDR Contact: 02/02/2009
Data Release Frequency: Semi-Annually

State and tribal leaking storage tank lists

LUST: Leaking Underground Storage Tank Sites

Leaking Underground Storage Tank Incident Reports. LUST records contain an inventory of reported leaking underground storage tank incidents. Not all states maintain these records, and the information stored varies by state.

Date of Government Version: 12/01/2008
Date Data Arrived at EDR: 12/09/2008
Date Made Active in Reports: 01/06/2009
Number of Days to Update: 28

Source: Department of Environmental Quality
Telephone: 517-373-9837
Last EDR Contact: 12/09/2008
Next Scheduled EDR Contact: 03/09/2009
Data Release Frequency: Annually

INDIAN LUST R8: Leaking Underground Storage Tanks on Indian Land
LUSTs on Indian land in Colorado, Montana, North Dakota, South Dakota, Utah and Wyoming.

Date of Government Version: 12/02/2008
Date Data Arrived at EDR: 12/04/2008
Date Made Active in Reports: 12/23/2008
Number of Days to Update: 19

Source: EPA Region 8
Telephone: 303-312-6271
Last EDR Contact: 11/17/2008
Next Scheduled EDR Contact: 02/16/2009
Data Release Frequency: Quarterly

INDIAN LUST R1: Leaking Underground Storage Tanks on Indian Land
A listing of leaking underground storage tank locations on Indian Land.

Date of Government Version: 03/12/2008
Date Data Arrived at EDR: 03/14/2008
Date Made Active in Reports: 03/20/2008
Number of Days to Update: 6

Source: EPA Region 1
Telephone: 617-918-1313
Last EDR Contact: 11/17/2008
Next Scheduled EDR Contact: 02/16/2009
Data Release Frequency: Varies

INDIAN LUST R9: Leaking Underground Storage Tanks on Indian Land
LUSTs on Indian land in Arizona, California, New Mexico and Nevada

Date of Government Version: 10/10/2008
Date Data Arrived at EDR: 10/10/2008
Date Made Active in Reports: 10/16/2008
Number of Days to Update: 6

Source: Environmental Protection Agency
Telephone: 415-972-3372
Last EDR Contact: 11/17/2008
Next Scheduled EDR Contact: 02/16/2009
Data Release Frequency: Quarterly

INDIAN LUST R10: Leaking Underground Storage Tanks on Indian Land
LUSTs on Indian land in Alaska, Idaho, Oregon and Washington.

Date of Government Version: 11/18/2008
Date Data Arrived at EDR: 11/19/2008
Date Made Active in Reports: 12/23/2008
Number of Days to Update: 34

Source: EPA Region 10
Telephone: 206-553-2857
Last EDR Contact: 11/17/2008
Next Scheduled EDR Contact: 02/16/2009
Data Release Frequency: Quarterly

INDIAN LUST R7: Leaking Underground Storage Tanks on Indian Land
LUSTs on Indian land in Iowa, Kansas, and Nebraska

Date of Government Version: 04/01/2008
Date Data Arrived at EDR: 12/03/2008
Date Made Active in Reports: 12/23/2008
Number of Days to Update: 20

Source: EPA Region 7
Telephone: 913-551-7003
Last EDR Contact: 11/19/2008
Next Scheduled EDR Contact: 02/16/2009
Data Release Frequency: Varies

INDIAN LUST R6: Leaking Underground Storage Tanks on Indian Land
LUSTs on Indian land in New Mexico and Oklahoma.

Date of Government Version: 11/25/2008
Date Data Arrived at EDR: 11/26/2008
Date Made Active in Reports: 12/23/2008
Number of Days to Update: 27

Source: EPA Region 6
Telephone: 214-665-6597
Last EDR Contact: 11/17/2008
Next Scheduled EDR Contact: 02/16/2009
Data Release Frequency: Varies

INDIAN LUST R4: Leaking Underground Storage Tanks on Indian Land
LUSTs on Indian land in Florida, Mississippi and North Carolina.

Date of Government Version: 06/06/2008
Date Data Arrived at EDR: 10/09/2008
Date Made Active in Reports: 11/19/2008
Number of Days to Update: 41

Source: EPA Region 4
Telephone: 404-562-8677
Last EDR Contact: 11/17/2008
Next Scheduled EDR Contact: 02/16/2009
Data Release Frequency: Semi-Annually

State and tribal registered storage tank lists

UST: Underground Storage Tank Facility List
Registered Underground Storage Tanks. UST's are regulated under Subtitle I of the Resource Conservation and Recovery Act (RCRA) and must be registered with the state department responsible for administering the UST program. Available information varies by state program.

Date of Government Version: 12/01/2008
Date Data Arrived at EDR: 12/09/2008
Date Made Active in Reports: 01/06/2009
Number of Days to Update: 28

Source: Department of Environmental Quality
Telephone: 517-335-4035
Last EDR Contact: 12/09/2008
Next Scheduled EDR Contact: 03/09/2009
Data Release Frequency: Annually

AST: Aboveground Tanks
Registered Aboveground Storage Tanks.

Date of Government Version: 06/23/2008
Date Data Arrived at EDR: 06/30/2008
Date Made Active in Reports: 08/18/2008
Number of Days to Update: 49

Source: Department of Environmental Quality
Telephone: 517-373-8168
Last EDR Contact: 12/11/2008
Next Scheduled EDR Contact: 03/09/2009
Data Release Frequency: No Update Planned

INDIAN UST R10: Underground Storage Tanks on Indian Land
No description is available for this data

Date of Government Version: 11/18/2008
Date Data Arrived at EDR: 11/19/2008
Date Made Active in Reports: 12/23/2008
Number of Days to Update: 34

Source: EPA Region 10
Telephone: 206-553-2857
Last EDR Contact: 11/17/2008
Next Scheduled EDR Contact: 02/16/2009
Data Release Frequency: Quarterly

INDIAN UST R9: Underground Storage Tanks on Indian Land
No description is available for this data

Date of Government Version: 09/05/2008
Date Data Arrived at EDR: 09/19/2008
Date Made Active in Reports: 10/16/2008
Number of Days to Update: 27

Source: EPA Region 9
Telephone: 415-972-3368
Last EDR Contact: 11/17/2008
Next Scheduled EDR Contact: 02/16/2009
Data Release Frequency: Quarterly

INDIAN UST R8: Underground Storage Tanks on Indian Land
No description is available for this data

Date of Government Version: 12/01/2008
Date Data Arrived at EDR: 12/04/2008
Date Made Active in Reports: 12/23/2008
Number of Days to Update: 19

Source: EPA Region 8
Telephone: 303-312-6137
Last EDR Contact: 11/17/2008
Next Scheduled EDR Contact: 02/16/2009
Data Release Frequency: Quarterly

INDIAN UST R7: Underground Storage Tanks on Indian Land
No description is available for this data

Date of Government Version: 06/01/2007
Date Data Arrived at EDR: 06/14/2007
Date Made Active in Reports: 07/05/2007
Number of Days to Update: 21

Source: EPA Region 7
Telephone: 913-551-7003
Last EDR Contact: 11/19/2008
Next Scheduled EDR Contact: 02/16/2009
Data Release Frequency: Varies

INDIAN UST R6: Underground Storage Tanks on Indian Land
No description is available for this data

Date of Government Version: 11/25/2008
Date Data Arrived at EDR: 11/26/2008
Date Made Active in Reports: 12/23/2008
Number of Days to Update: 27

Source: EPA Region 6
Telephone: 214-665-7591
Last EDR Contact: 11/17/2008
Next Scheduled EDR Contact: 02/16/2009
Data Release Frequency: Semi-Annually

INDIAN UST R5: Underground Storage Tanks on Indian Land
No description is available for this data

Date of Government Version: 09/08/2008
Date Data Arrived at EDR: 09/19/2008
Date Made Active in Reports: 10/16/2008
Number of Days to Update: 27

Source: EPA Region 5
Telephone: 312-886-6136
Last EDR Contact: 11/17/2008
Next Scheduled EDR Contact: 02/16/2009
Data Release Frequency: Varies

INDIAN UST R4: Underground Storage Tanks on Indian Land
No description is available for this data

Date of Government Version: 06/06/2008
Date Data Arrived at EDR: 10/09/2008
Date Made Active in Reports: 11/19/2008
Number of Days to Update: 41

Source: EPA Region 4
Telephone: 404-562-9424
Last EDR Contact: 11/17/2008
Next Scheduled EDR Contact: 02/16/2009
Data Release Frequency: Semi-Annually

INDIAN UST R1: Underground Storage Tanks on Indian Land
A listing of underground storage tank locations on Indian Land.

Date of Government Version: 03/12/2008
Date Data Arrived at EDR: 03/14/2008
Date Made Active in Reports: 03/20/2008
Number of Days to Update: 6

Source: EPA, Region 1
Telephone: 617-918-1313
Last EDR Contact: 11/17/2008
Next Scheduled EDR Contact: 02/16/2009
Data Release Frequency: Varies

State and tribal institutional control / engineering control registries

AUL: Engineering and Institutional Controls
A listing of sites with institutional and/or engineering controls in place.

Date of Government Version: 10/13/2008
Date Data Arrived at EDR: 10/14/2008
Date Made Active in Reports: 11/21/2008
Number of Days to Update: 38

Source: Department of Environmental Quality
Telephone: 517-373-4828
Last EDR Contact: 01/05/2009
Next Scheduled EDR Contact: 03/23/2009
Data Release Frequency: Varies

State and tribal voluntary cleanup sites

INDIAN VCP R7: Voluntary Cleanup Priority Lisitng
A listing of voluntary cleanup priority sites located on Indian Land located in Region 7.

Date of Government Version: 03/20/2008
Date Data Arrived at EDR: 04/22/2008
Date Made Active in Reports: 05/19/2008
Number of Days to Update: 27

Source: EPA, Region 7
Telephone: 913-551-7365
Last EDR Contact: 10/20/2008
Next Scheduled EDR Contact: 01/19/2009
Data Release Frequency: Varies

INDIAN VCP R1: Voluntary Cleanup Priority Listing
A listing of voluntary cleanup priority sites located on Indian Land located in Region 1.

Date of Government Version: 04/02/2008
Date Data Arrived at EDR: 04/22/2008
Date Made Active in Reports: 05/19/2008
Number of Days to Update: 27

Source: EPA, Region 1
Telephone: 617-918-1102
Last EDR Contact: 10/20/2008
Next Scheduled EDR Contact: 01/19/2009
Data Release Frequency: Varies

State and tribal Brownfields sites

BROWNFIELDS: Brownfields and USTfield Site Database
All state funded Part 201 and 213 sites, as well as LUST sites that have been redeveloped by private entities using the BEA process. Be aware that this is not a list of all of the potential brownfield sites in Michigan.

Date of Government Version: 12/16/2008
Date Data Arrived at EDR: 12/17/2008
Date Made Active in Reports: 01/06/2009
Number of Days to Update: 20

Source: Department of Environmental Quality
Telephone: 517-373-4805
Last EDR Contact: 12/15/2008
Next Scheduled EDR Contact: 02/16/2009
Data Release Frequency: Varies

BROWNFIELDS 2: Brownfields Building and Land Site Locations
A listing of brownfield building and land site locations. The listing is a collaborative effort of Michigan Economic Development Corporation, Michigan Economic Developers Association, Detrot Edison, Detroit Area Commercial Board of Realtors

Date of Government Version: 04/09/2007
Date Data Arrived at EDR: 04/10/2007
Date Made Active in Reports: 05/01/2007
Number of Days to Update: 21

Source: Economic Development Corporation
Telephone: 888-522-0103
Last EDR Contact: 12/11/2008
Next Scheduled EDR Contact: 03/09/2009
Data Release Frequency: Varies

ADDITIONAL ENVIRONMENTAL RECORDS

Local Brownfield lists

US BROWNFIELDS: A Listing of Brownfields Sites
Included in the listing are brownfields properties addresses by Cooperative Agreement Recipients and brownfields properties addressed by Targeted Brownfields Assessments. Targeted Brownfields Assessments-EPA's Targeted Brownfields Assessments (TBA) program is designed to help states, tribes, and municipalities--especially those without EPA Brownfields Assessment Demonstration Pilots--minimize the uncertainties of contamination often associated with brownfields. Under the TBA program, EPA provides funding and/or technical assistance for environmental assessments at brownfields sites throughout the country. Targeted Brownfields Assessments supplement and work with other efforts under EPA's Brownfields Initiative to promote cleanup and redevelopment of brownfields. Cooperative Agreement Recipients-States, political subdivisions, territories, and Indian tribes become Brownfields Cleanup Revolving Loan Fund (BCRLF) cooperative agreement recipients when they enter into BCRLF cooperative agreements with the U.S. EPA. EPA selects BCRLF cooperative agreement recipients based on a proposal and application process. BCRLF cooperative agreement recipients must use EPA funds provided through BCRLF cooperative agreement for specified brownfields-related cleanup activities.

Date of Government Version: 10/01/2008
Date Data Arrived at EDR: 11/14/2008
Date Made Active in Reports: 12/23/2008
Number of Days to Update: 39

Source: Environmental Protection Agency
Telephone: 202-566-2777
Last EDR Contact: 10/16/2008
Next Scheduled EDR Contact: 01/12/2009
Data Release Frequency: Semi-Annually

Local Lists of Landfill / Solid Waste Disposal Sites

ODI: Open Dump Inventory
An open dump is defined as a disposal facility that does not comply with one or more of the Part 257 or Part 258 Subtitle D Criteria.

Date of Government Version: 06/30/1985
Date Data Arrived at EDR: 08/09/2004
Date Made Active in Reports: 09/17/2004
Number of Days to Update: 39

Source: Environmental Protection Agency
Telephone: 800-424-9346
Last EDR Contact: 06/09/2004
Next Scheduled EDR Contact: N/A
Data Release Frequency: No Update Planned

DEBRIS REGION 9: Torres Martinez Reservation Illegal Dump Site Locations
A listing of illegal dump sites location on the Torres Martinez Indian Reservation located in eastern Riverside County and northern Imperial County, California.

Date of Government Version: 03/25/2008
Date Data Arrived at EDR: 04/17/2008
Date Made Active in Reports: 05/15/2008
Number of Days to Update: 28

Source: EPA, Region 9
Telephone: 415-972-3336
Last EDR Contact: 12/22/2008
Next Scheduled EDR Contact: 03/23/2009
Data Release Frequency: Varies

HIST LF: Inactive Solid Waste Facilities
The database contains historical information and is no longer updated.

Date of Government Version: 03/01/1997
Date Data Arrived at EDR: 02/28/2003
Date Made Active in Reports: 03/06/2003
Number of Days to Update: 6

Source: Department of Environmental Quality
Telephone: 517-335-4034
Last EDR Contact: 02/28/2003
Next Scheduled EDR Contact: N/A
Data Release Frequency: No Update Planned

INDIAN ODI: Report on the Status of Open Dumps on Indian Lands
Location of open dumps on Indian land.

Date of Government Version: 12/31/1998
Date Data Arrived at EDR: 12/03/2007
Date Made Active in Reports: 01/24/2008
Number of Days to Update: 52

Source: Environmental Protection Agency
Telephone: 703-308-8245
Last EDR Contact: 11/24/2008
Next Scheduled EDR Contact: 02/23/2009
Data Release Frequency: Varies

Local Lists of Hazardous waste / Contaminated Sites

CDL: Clandestine Drug Labs
A listing of clandestine drug lab locations. The U.S. Department of Justice ("the Department") provides this web site as a public service. It contains addresses of some locations where law enforcement agencies reported they found chemicals or other items that indicated the presence of either clandestine drug laboratories or dumpsites. In most cases, the source of the entries is not the Department, and the Department has not verified the entry and does not guarantee its accuracy. Members of the public must verify the accuracy of all entries by, for example, contacting local law enforcement and local health departments.

Date of Government Version: 07/01/2008
Date Data Arrived at EDR: 10/31/2008
Date Made Active in Reports: 12/23/2008
Number of Days to Update: 53

Source: Drug Enforcement Administration
Telephone: 202-307-1000
Last EDR Contact: 10/31/2008
Next Scheduled EDR Contact: 03/23/2009
Data Release Frequency: Quarterly

DEL SHWS: Delisted List of Contaminated Sites
Sites that have been delisted or deleted from the List of Contaminated Sites. The available documentation for the site does not support it's listing or the site no longer meets criteria specified in rules.

Date of Government Version: 11/19/2008
Date Data Arrived at EDR: 11/19/2008
Date Made Active in Reports: 01/06/2009
Number of Days to Update: 48

Source: Department of Environmental Quality
Telephone: 517-373-9541
Last EDR Contact: 11/17/2008
Next Scheduled EDR Contact: 02/16/2009
Data Release Frequency: Varies

CDL: Clandestine Drug Lab Listing
A listing of clandestine drug lab locations.

Date of Government Version: 10/20/2008
Date Data Arrived at EDR: 11/18/2008
Date Made Active in Reports: 11/21/2008
Number of Days to Update: 3

Source: Department of Community Health
Telephone: 517-373-3740
Last EDR Contact: 11/18/2008
Next Scheduled EDR Contact: 02/16/2009
Data Release Frequency: Varies

Local Land Records

LIENS 2: CERCLA Lien Information

A Federal CERCLA ('Superfund') lien can exist by operation of law at any site or property at which EPA has spent Superfund monies. These monies are spent to investigate and address releases and threatened releases of contamination. CERCLIS provides information as to the identity of these sites and properties.

Date of Government Version: 08/19/2008
Date Data Arrived at EDR: 08/29/2008
Date Made Active in Reports: 09/09/2008
Number of Days to Update: 11

Source: Environmental Protection Agency
Telephone: 202-564-6023
Last EDR Contact: 11/17/2008
Next Scheduled EDR Contact: 02/16/2009
Data Release Frequency: Varies

LUCIS: Land Use Control Information System

LUCIS contains records of land use control information pertaining to the former Navy Base Realignment and Closure properties.

Date of Government Version: 12/09/2005
Date Data Arrived at EDR: 12/11/2006
Date Made Active in Reports: 01/11/2007
Number of Days to Update: 31

Source: Department of the Navy
Telephone: 843-820-7326
Last EDR Contact: 12/08/2008
Next Scheduled EDR Contact: 03/09/2009
Data Release Frequency: Varies

LIENS: Lien List

An Environmental Lien is a charge, security, or encumbrance upon title to a property to secure the payment of a cost, damage, debt, obligation, or duty arising out of response actions, cleanup, or other remediation of hazardous substances or petroleum products upon a property, including (but not limited to) liens imposed pursuant to CERCLA 42 USC * 9607(1) and similar state or local laws. In other words: a lien placed upon a property's title due to an environmental condition

Date of Government Version: 11/03/2008
Date Data Arrived at EDR: 11/25/2008
Date Made Active in Reports: 01/06/2009
Number of Days to Update: 42

Source: Department of Environmental Quality
Telephone: 517-373-9837
Last EDR Contact: 08/14/2008
Next Scheduled EDR Contact: 11/10/2008
Data Release Frequency: Varies

Records of Emergency Release Reports

HMIRS: Hazardous Materials Information Reporting System

Hazardous Materials Incident Report System. HMIRS contains hazardous material spill incidents reported to DOT.

Date of Government Version: 09/30/2008
Date Data Arrived at EDR: 10/16/2008
Date Made Active in Reports: 11/19/2008
Number of Days to Update: 34

Source: U.S. Department of Transportation
Telephone: 202-366-4555
Last EDR Contact: 10/16/2008
Next Scheduled EDR Contact: 01/12/2009
Data Release Frequency: Annually

PEAS: Pollution Emergency Alerting System

Environmental pollution emergencies reported to the Department of Environmental Quality such as tanker accidents, pipeline breaks, and release of reportable quantities of hazardous substances.

Date of Government Version: 09/19/2008
Date Data Arrived at EDR: 09/30/2008
Date Made Active in Reports: 10/14/2008
Number of Days to Update: 14

Source: Department of Environmental Quality
Telephone: 517-373-8427
Last EDR Contact: 12/29/2008
Next Scheduled EDR Contact: 03/30/2009
Data Release Frequency: Quarterly

Other Ascertainable Records

RCRA-NonGen: RCRA - Non Generators

RCRAInfo is EPA's comprehensive information system, providing access to data supporting the Resource Conservation and Recovery Act (RCRA) of 1976 and the Hazardous and Solid Waste Amendments (HSWA) of 1984. The database includes selective information on sites which generate, transport, store, treat and/or dispose of hazardous waste as defined by the Resource Conservation and Recovery Act (RCRA). Non-Generators do not presently generate hazardous waste.

Date of Government Version: 09/10/2008
Date Data Arrived at EDR: 09/23/2008
Date Made Active in Reports: 10/16/2008
Number of Days to Update: 23

Source: Environmental Protection Agency
Telephone: 312-886-6186
Last EDR Contact: 11/18/2008
Next Scheduled EDR Contact: 02/16/2009
Data Release Frequency: Varies

DOT OPS: Incident and Accident Data

Department of Transporation, Office of Pipeline Safety Incident and Accident data.

Date of Government Version: 05/14/2008
Date Data Arrived at EDR: 05/28/2008
Date Made Active in Reports: 08/08/2008
Number of Days to Update: 72

Source: Department of Transporation, Office of Pipeline Safety
Telephone: 202-366-4595
Last EDR Contact: 11/26/2008
Next Scheduled EDR Contact: 02/23/2009
Data Release Frequency: Varies

DOD: Department of Defense Sites

This data set consists of federally owned or administered lands, administered by the Department of Defense, that have any area equal to or greater than 640 acres of the United States, Puerto Rico, and the U.S. Virgin Islands.

Date of Government Version: 12/31/2005
Date Data Arrived at EDR: 11/10/2006
Date Made Active in Reports: 01/11/2007
Number of Days to Update: 62

Source: USGS
Telephone: 703-692-8801
Last EDR Contact: 11/07/2008
Next Scheduled EDR Contact: 02/02/2009
Data Release Frequency: Semi-Annually

FUDS: Formerly Used Defense Sites

The listing includes locations of Formerly Used Defense Sites properties where the US Army Corps of Engineers is actively working or will take necessary cleanup actions.

Date of Government Version: 12/31/2007
Date Data Arrived at EDR: 09/05/2008
Date Made Active in Reports: 09/23/2008
Number of Days to Update: 18

Source: U.S. Army Corps of Engineers
Telephone: 202-528-4285
Last EDR Contact: 12/29/2008
Next Scheduled EDR Contact: 03/30/2009
Data Release Frequency: Varies

CONSENT: Superfund (CERCLA) Consent Decrees

Major legal settlements that establish responsibility and standards for cleanup at NPL (Superfund) sites. Released periodically by United States District Courts after settlement by parties to litigation matters.

Date of Government Version: 09/15/2008
Date Data Arrived at EDR: 10/22/2008
Date Made Active in Reports: 12/23/2008
Number of Days to Update: 62

Source: Department of Justice, Consent Decree Library
Telephone: Varies
Last EDR Contact: 12/17/2008
Next Scheduled EDR Contact: 01/19/2009
Data Release Frequency: Varies

ROD: Records Of Decision

Record of Decision. ROD documents mandate a permanent remedy at an NPL (Superfund) site containing technical and health information to aid in the cleanup.

Date of Government Version: 10/21/2008
Date Data Arrived at EDR: 10/29/2008
Date Made Active in Reports: 12/23/2008
Number of Days to Update: 55

Source: EPA
Telephone: 703-416-0223
Last EDR Contact: 12/29/2008
Next Scheduled EDR Contact: 03/30/2009
Data Release Frequency: Annually

UMTRA: Uranium Mill Tailings Sites

Uranium ore was mined by private companies for federal government use in national defense programs. When the mills shut down, large piles of the sand-like material (mill tailings) remain after uranium has been extracted from the ore. Levels of human exposure to radioactive materials from the piles are low; however, in some cases tailings were used as construction materials before the potential health hazards of the tailings were recognized.

Date of Government Version: 07/13/2007
Date Data Arrived at EDR: 12/03/2007
Date Made Active in Reports: 01/24/2008
Number of Days to Update: 52

Source: Department of Energy
Telephone: 505-845-0011
Last EDR Contact: 12/17/2008
Next Scheduled EDR Contact: 03/16/2009
Data Release Frequency: Varies

MINES: Mines Master Index File

Contains all mine identification numbers issued for mines active or opened since 1971. The data also includes violation information.

Date of Government Version: 08/07/2008
Date Data Arrived at EDR: 09/23/2008
Date Made Active in Reports: 10/16/2008
Number of Days to Update: 23

Source: Department of Labor, Mine Safety and Health Administration
Telephone: 303-231-5959
Last EDR Contact: 12/23/2008
Next Scheduled EDR Contact: 03/23/2009
Data Release Frequency: Semi-Annually

TRIS: Toxic Chemical Release Inventory System

Toxic Release Inventory System. TRIS identifies facilities which release toxic chemicals to the air, water and land in reportable quantities under SARA Title III Section 313.

Date of Government Version: 12/31/2006
Date Data Arrived at EDR: 02/29/2008
Date Made Active in Reports: 04/18/2008
Number of Days to Update: 49

Source: EPA
Telephone: 202-566-0250
Last EDR Contact: 09/19/2008
Next Scheduled EDR Contact: 12/15/2008
Data Release Frequency: Annually

TSCA: Toxic Substances Control Act

Toxic Substances Control Act. TSCA identifies manufacturers and importers of chemical substances included on the TSCA Chemical Substance Inventory list. It includes data on the production volume of these substances by plant site.

Date of Government Version: 12/31/2002
Date Data Arrived at EDR: 04/14/2006
Date Made Active in Reports: 05/30/2006
Number of Days to Update: 46

Source: EPA
Telephone: 202-260-5521
Last EDR Contact: 10/14/2008
Next Scheduled EDR Contact: 01/12/2009
Data Release Frequency: Every 4 Years

FTTS: FIFRA/ TSCA Tracking System - FIFRA (Federal Insecticide, Fungicide, & Rodenticide Act)/TSCA (Toxic Substances Control Act)

FTTS tracks administrative cases and pesticide enforcement actions and compliance activities related to FIFRA, TSCA and EPCRA (Emergency Planning and Community Right-to-Know Act). To maintain currency, EDR contacts the Agency on a quarterly basis.

Date of Government Version: 10/08/2008
Date Data Arrived at EDR: 10/17/2008
Date Made Active in Reports: 12/08/2008
Number of Days to Update: 52

Source: EPA/Office of Prevention, Pesticides and Toxic Substances
Telephone: 202-566-1667
Last EDR Contact: 12/15/2008
Next Scheduled EDR Contact: 03/16/2009
Data Release Frequency: Quarterly

FTTS INSP: FIFRA/ TSCA Tracking System - FIFRA (Federal Insecticide, Fungicide, & Rodenticide Act)/TSCA (Toxic Substances Control Act)

A listing of FIFRA/TSCA Tracking System (FTTS) inspections and enforcements.

Date of Government Version: 10/08/2008
Date Data Arrived at EDR: 10/17/2008
Date Made Active in Reports: 12/08/2008
Number of Days to Update: 52

Source: EPA
Telephone: 202-566-1667
Last EDR Contact: 12/15/2008
Next Scheduled EDR Contact: 03/16/2009
Data Release Frequency: Quarterly

HIST FTTS: FIFRA/TSCA Tracking System Administrative Case Listing

A complete administrative case listing from the FIFRA/TSCA Tracking System (FTTS) for all ten EPA regions. The information was obtained from the National Compliance Database (NCDB). NCDB supports the implementation of FIFRA (Federal Insecticide, Fungicide, and Rodenticide Act) and TSCA (Toxic Substances Control Act). Some EPA regions are now closing out records. Because of that, and the fact that some EPA regions are not providing EPA Headquarters with updated records, it was decided to create a HIST FTTS database. It included records that may not be included in the newer FTTS database updates. This database is no longer updated.

Date of Government Version: 10/19/2006
Date Data Arrived at EDR: 03/01/2007
Date Made Active in Reports: 04/10/2007
Number of Days to Update: 40

Source: Environmental Protection Agency
Telephone: 202-564-2501
Last EDR Contact: 12/17/2007
Next Scheduled EDR Contact: 03/17/2008
Data Release Frequency: No Update Planned

HIST FTTS INSP: FIFRA/TSCA Tracking System Inspection & Enforcement Case Listing

A complete inspection and enforcement case listing from the FIFRA/TSCA Tracking System (FTTS) for all ten EPA regions. The information was obtained from the National Compliance Database (NCDB). NCDB supports the implementation of FIFRA (Federal Insecticide, Fungicide, and Rodenticide Act) and TSCA (Toxic Substances Control Act). Some EPA regions are now closing out records. Because of that, and the fact that some EPA regions are not providing EPA Headquarters with updated records, it was decided to create a HIST FTTS database. It included records that may not be included in the newer FTTS database updates. This database is no longer updated.

Date of Government Version: 10/19/2006
Date Data Arrived at EDR: 03/01/2007
Date Made Active in Reports: 04/10/2007
Number of Days to Update: 40

Source: Environmental Protection Agency
Telephone: 202-564-2501
Last EDR Contact: 12/17/2008
Next Scheduled EDR Contact: 03/17/2008
Data Release Frequency: No Update Planned

SSTS: Section 7 Tracking Systems

Section 7 of the Federal Insecticide, Fungicide and Rodenticide Act, as amended (92 Stat. 829) requires all registered pesticide-producing establishments to submit a report to the Environmental Protection Agency by March 1st each year. Each establishment must report the types and amounts of pesticides, active ingredients and devices being produced, and those having been produced and sold or distributed in the past year.

Date of Government Version: 12/31/2006
Date Data Arrived at EDR: 03/14/2008
Date Made Active in Reports: 04/18/2008
Number of Days to Update: 35

Source: EPA
Telephone: 202-564-4203
Last EDR Contact: 12/04/2008
Next Scheduled EDR Contact: 01/12/2009
Data Release Frequency: Annually

ICIS: Integrated Compliance Information System

The Integrated Compliance Information System (ICIS) supports the information needs of the national enforcement and compliance program as well as the unique needs of the National Pollutant Discharge Elimination System (NPDES) program.

Date of Government Version: 07/31/2008
Date Data Arrived at EDR: 08/13/2008
Date Made Active in Reports: 09/09/2008
Number of Days to Update: 27

Source: Environmental Protection Agency
Telephone: 202-564-5088
Last EDR Contact: 10/14/2008
Next Scheduled EDR Contact: 01/12/2009
Data Release Frequency: Quarterly

PADS: PCB Activity Database System

PCB Activity Database. PADS Identifies generators, transporters, commercial storers and/or brokers and disposers of PCB's who are required to notify the EPA of such activities.

Date of Government Version: 12/04/2007
Date Data Arrived at EDR: 02/07/2008
Date Made Active in Reports: 03/17/2008
Number of Days to Update: 39

Source: EPA
Telephone: 202-566-0500
Last EDR Contact: 09/18/2008
Next Scheduled EDR Contact: 11/03/2008
Data Release Frequency: Annually

MLTS: Material Licensing Tracking System

MLTS is maintained by the Nuclear Regulatory Commission and contains a list of approximately 8,100 sites which possess or use radioactive materials and which are subject to NRC licensing requirements. To maintain currency, EDR contacts the Agency on a quarterly basis.

Date of Government Version: 10/03/2008
Date Data Arrived at EDR: 10/15/2008
Date Made Active in Reports: 11/19/2008
Number of Days to Update: 35

Source: Nuclear Regulatory Commission
Telephone: 301-415-7169
Last EDR Contact: 12/29/2008
Next Scheduled EDR Contact: 03/30/2009
Data Release Frequency: Quarterly

RADINFO: Radiation Information Database

The Radiation Information Database (RADINFO) contains information about facilities that are regulated by U.S. Environmental Protection Agency (EPA) regulations for radiation and radioactivity.

Date of Government Version: 10/28/2008
Date Data Arrived at EDR: 10/29/2008
Date Made Active in Reports: 12/08/2008
Number of Days to Update: 40

Source: Environmental Protection Agency
Telephone: 202-343-9775
Last EDR Contact: 10/29/2008
Next Scheduled EDR Contact: 01/26/2009
Data Release Frequency: Quarterly

FINDS: Facility Index System/Facility Registry System

Facility Index System. FINDS contains both facility information and 'pointers' to other sources that contain more detail. EDR includes the following FINDS databases in this report: PCS (Permit Compliance System), AIRS (Aerometric Information Retrieval System), DOCKET (Enforcement Docket used to manage and track information on civil judicial enforcement cases for all environmental statutes), FURS (Federal Underground Injection Control), C-DOCKET (Criminal Docket System used to track criminal enforcement actions for all environmental statutes), FFIS (Federal Facilities Information System), STATE (State Environmental Laws and Statutes), and PADS (PCB Activity Data System).

Date of Government Version: 10/30/2008
Date Data Arrived at EDR: 10/31/2008
Date Made Active in Reports: 12/23/2008
Number of Days to Update: 53

Source: EPA
Telephone: (312) 353-2000
Last EDR Contact: 12/29/2008
Next Scheduled EDR Contact: 03/30/2009
Data Release Frequency: Quarterly

RAATS: RCRA Administrative Action Tracking System

RCRA Administration Action Tracking System. RAATS contains records based on enforcement actions issued under RCRA pertaining to major violators and includes administrative and civil actions brought by the EPA. For administration actions after September 30, 1995, data entry in the RAATS database was discontinued. EPA will retain a copy of the database for historical records. It was necessary to terminate RAATS because a decrease in agency resources made it impossible to continue to update the information contained in the database.

Date of Government Version: 04/17/1995
Date Data Arrived at EDR: 07/03/1995
Date Made Active in Reports: 08/07/1995
Number of Days to Update: 35

Source: EPA
Telephone: 202-564-4104
Last EDR Contact: 06/02/2008
Next Scheduled EDR Contact: 09/01/2008
Data Release Frequency: No Update Planned

BRS: Biennial Reporting System

The Biennial Reporting System is a national system administered by the EPA that collects data on the generation and management of hazardous waste. BRS captures detailed data from two groups: Large Quantity Generators (LQG) and Treatment, Storage, and Disposal Facilities.

Date of Government Version: 12/31/2005
Date Data Arrived at EDR: 03/06/2007
Date Made Active in Reports: 04/13/2007
Number of Days to Update: 38

Source: EPA/NTIS
Telephone: 800-424-9346
Last EDR Contact: 12/09/2008
Next Scheduled EDR Contact: 03/09/2009
Data Release Frequency: Biennially

DRYCLEANERS: Drycleaning Establishments
A listing of drycleaning facilities in Michigan.

Date of Government Version: 07/17/2008
Date Data Arrived at EDR: 09/02/2008
Date Made Active in Reports: 09/19/2008
Number of Days to Update: 17

Source: Department of Environmental Quality
Telephone: 517-335-4586
Last EDR Contact: 11/10/2008
Next Scheduled EDR Contact: 02/09/2009
Data Release Frequency: Varies

NPDES: List of Active NPDES Permits
General information regarding NPDES (National Pollutant Discharge Elimination System) permits and NPDES Storm Water permits.

Date of Government Version: 10/28/2008
Date Data Arrived at EDR: 10/29/2008
Date Made Active in Reports: 11/21/2008
Number of Days to Update: 23

Source: Department of Environmental Quality
Telephone: 517-241-1300
Last EDR Contact: 10/29/2008
Next Scheduled EDR Contact: 01/26/2009
Data Release Frequency: Varies

AIRS: Permit and Emissions Inventory Data
Permit and emissions inventory data.

Date of Government Version: 05/22/2007
Date Data Arrived at EDR: 10/19/2007
Date Made Active in Reports: 11/05/2007
Number of Days to Update: 17

Source: Department of Environmental Quality
Telephone: 517-373-7074
Last EDR Contact: 10/17/2008
Next Scheduled EDR Contact: 01/12/2009
Data Release Frequency: Varies

BEA: BASELINE ENVIRONMENTAL ASSESSMENT DATABASE
A Baseline Environmental Assessment (BEA) allows people to purchase or begin operating at a facility without being held liable for existing contamination. BEAs are used to gather enough information about the property being transferred so that existing contamination can be distinguished from any new releases that might occur after the new owner or operator takes over the property.

Date of Government Version: 12/08/2008
Date Data Arrived at EDR: 12/09/2008
Date Made Active in Reports: 01/06/2009
Number of Days to Update: 28

Source: DEPT. OF ENVIRONMENTAL QUALITY
Telephone: 517-373-9541
Last EDR Contact: 12/08/2008
Next Scheduled EDR Contact: 03/09/2009
Data Release Frequency: Semi-Annually

INDIAN RESERV: Indian Reservations
This map layer portrays Indian administered lands of the United States that have any area equal to or greater than 640 acres.

Date of Government Version: 12/31/2005
Date Data Arrived at EDR: 12/08/2006
Date Made Active in Reports: 01/11/2007
Number of Days to Update: 34

Source: USGS
Telephone: 202-208-3710
Last EDR Contact: 11/07/2008
Next Scheduled EDR Contact: 02/02/2009
Data Release Frequency: Semi-Annually

SCRD DRYCLEANERS: State Coalition for Remediation of Drycleaners Listing
The State Coalition for Remediation of Drycleaners was established in 1998, with support from the U.S. EPA Office of Superfund Remediation and Technology Innovation. It is comprised of representatives of states with established drycleaner remediation programs. Currently the member states are Alabama, Connecticut, Florida, Illinois, Kansas, Minnesota, Missouri, North Carolina, Oregon, South Carolina, Tennessee, Texas, and Wisconsin.

Date of Government Version: 09/08/2008
Date Data Arrived at EDR: 09/10/2008
Date Made Active in Reports: 09/23/2008
Number of Days to Update: 13

Source: Environmental Protection Agency
Telephone: 615-532-8599
Last EDR Contact: 12/08/2008
Next Scheduled EDR Contact: 02/09/2009
Data Release Frequency: Varies

PWS: Public Water System Data

This Safe Drinking Water Information System (SDWIS) file contains public water systems name and address, population served and the primary source of water

Date of Government Version: 02/24/2000
Date Data Arrived at EDR: 04/27/2005
Date Made Active in Reports: N/A
Number of Days to Update: 0

Source: EPA
Telephone: N/A
Last EDR Contact: 12/29/2008
Next Scheduled EDR Contact: 03/30/2009
Data Release Frequency: N/A

FEDLAND: Federal and Indian Lands

Federally and Indian administrated lands of the United States. Lands included are administrated by: Army Corps of Engineers, Bureau of Reclamation, National Wild and Scenic River, National Wildlife Refuge, Public Domain Land, Wilderness, Wilderness Study Area, Wildlife Management Area, Bureau of Indian Affairs, Bureau of Land Management, Department of Justice, Forest Service, Fish and Wildlife Service, National Park Service.

Date of Government Version: 12/31/2005
Date Data Arrived at EDR: 02/06/2006
Date Made Active in Reports: 01/11/2007
Number of Days to Update: 339

Source: U.S. Geological Survey
Telephone: 888-275-8747
Last EDR Contact: 11/07/2008
Next Scheduled EDR Contact: 02/02/2009
Data Release Frequency: N/A

PRP: Potentially Responsible Parties

A listing of verified Potentially Responsible Parties

Date of Government Version: 07/09/2008
Date Data Arrived at EDR: 09/30/2008
Date Made Active in Reports: 10/07/2008
Number of Days to Update: 7

Source: EPA
Telephone: 202-564-6064
Last EDR Contact: 12/29/2008
Next Scheduled EDR Contact: 03/30/2009
Data Release Frequency: Quarterly

EDR PROPRIETARY RECORDS

EDR Proprietary Records

Manufactured Gas Plants: EDR Proprietary Manufactured Gas Plants

The EDR Proprietary Manufactured Gas Plant Database includes records of coal gas plants (manufactured gas plants) compiled by EDR's researchers. Manufactured gas sites were used in the United States from the 1800's to 1950's to produce a gas that could be distributed and used as fuel. These plants used whale oil, rosin, coal, or a mixture of coal, oil, and water that also produced a significant amount of waste. Many of the byproducts of the gas production, such as coal tar (oily waste containing volatile and non-volatile chemicals), sludges, oils and other compounds are potentially hazardous to human health and the environment. The byproduct from this process was frequently disposed of directly at the plant site and can remain or spread slowly, serving as a continuous source of soil and groundwater contamination.

Date of Government Version: N/A
Date Data Arrived at EDR: N/A
Date Made Active in Reports: N/A
Number of Days to Update: N/A

Source: EDR, Inc.
Telephone: N/A
Last EDR Contact: N/A
Next Scheduled EDR Contact: N/A
Data Release Frequency: No Update Planned

OTHER DATABASE(S)

Depending on the geographic area covered by this report, the data provided in these specialty databases may or may not be complete. For example, the existence of wetlands information data in a specific report does not mean that all wetlands in the area covered by the report are included. Moreover, the absence of any reported wetlands information does not necessarily mean that wetlands do not exist in the area covered by the report.

CT MANIFEST: Hazardous Waste Manifest Data
Facility and manifest data. Manifest is a document that lists and tracks hazardous waste from the generator through transporters to a tsd facility.

Date of Government Version: 12/31/2005
Date Data Arrived at EDR: 06/15/2007
Date Made Active in Reports: 08/20/2007
Number of Days to Update: 66

Source: Department of Environmental Protection
Telephone: 860-424-3375
Last EDR Contact: 12/11/2008
Next Scheduled EDR Contact: 03/09/2009
Data Release Frequency: Annually

NJ MANIFEST: Manifest Information
Hazardous waste manifest information.

Date of Government Version: 09/30/2007
Date Data Arrived at EDR: 12/04/2007
Date Made Active in Reports: 12/31/2007
Number of Days to Update: 27

Source: Department of Environmental Protection
Telephone: N/A
Last EDR Contact: 11/07/2008
Next Scheduled EDR Contact: 02/02/2009
Data Release Frequency: Annually

NY MANIFEST: Facility and Manifest Data
Manifest is a document that lists and tracks hazardous waste from the generator through transporters to a TSD facility.

Date of Government Version: 10/21/2008
Date Data Arrived at EDR: 11/26/2008
Date Made Active in Reports: 12/11/2008
Number of Days to Update: 15

Source: Department of Environmental Conservation
Telephone: 518-402-8651
Last EDR Contact: 11/26/2008
Next Scheduled EDR Contact: 02/23/2009
Data Release Frequency: Annually

PA MANIFEST: Manifest Information
Hazardous waste manifest information.

Date of Government Version: 12/31/2007
Date Data Arrived at EDR: 09/11/2008
Date Made Active in Reports: 10/02/2008
Number of Days to Update: 21

Source: Department of Environmental Protection
Telephone: N/A
Last EDR Contact: 12/08/2008
Next Scheduled EDR Contact: 03/09/2009
Data Release Frequency: Annually

RI MANIFEST: Manifest information
Hazardous waste manifest information

Date of Government Version: 10/07/2008
Date Data Arrived at EDR: 10/10/2008
Date Made Active in Reports: 10/28/2008
Number of Days to Update: 18

Source: Department of Environmental Management
Telephone: 401-222-2797
Last EDR Contact: 12/15/2008
Next Scheduled EDR Contact: 03/16/2009
Data Release Frequency: Annually

WI MANIFEST: Manifest Information
Hazardous waste manifest information.

Date of Government Version: 12/31/2007
Date Data Arrived at EDR: 08/22/2008
Date Made Active in Reports: 09/08/2008
Number of Days to Update: 17

Source: Department of Natural Resources
Telephone: N/A
Last EDR Contact: 01/05/2009
Next Scheduled EDR Contact: 04/06/2009
Data Release Frequency: Annually

Oil/Gas Pipelines: This data was obtained by EDR from the USGS in 1994. It is referred to by USGS as GeoData Digital Line Graphs from 1:100,000-Scale Maps. It was extracted from the transportation category including some oil, but primarily gas pipelines.

Electric Power Transmission Line Data
Source: PennWell Corporation
Telephone: (800) 823-6277
This map includes information copyrighted by PennWell Corporation. This information is provided on a best effort basis and PennWell Corporation does not guarantee its accuracy nor warrant its fitness for any particular purpose. Such information has been reprinted with the permission of PennWell.

Sensitive Receptors: There are individuals deemed sensitive receptors due to their fragile immune systems and special sensitivity to environmental discharges. These sensitive receptors typically include the elderly, the sick, and children. While the location of all sensitive receptors cannot be determined, EDR indicates those buildings and facilities - schools, daycares, hospitals, medical centers, and nursing homes - where individuals who are sensitive receptors are likely to be located.

AHA Hospitals:
Source: American Hospital Association, Inc.
Telephone: 312-280-5991
The database includes a listing of hospitals based on the American Hospital Association's annual survey of hospitals.

Medical Centers: Provider of Services Listing
Source: Centers for Medicare & Medicaid Services
Telephone: 410-786-3000
A listing of hospitals with Medicare provider number, produced by Centers of Medicare & Medicaid Services, a federal agency within the U.S. Department of Health and Human Services.

Nursing Homes
Source: National Institutes of Health
Telephone: 301-594-6248
Information on Medicare and Medicaid certified nursing homes in the United States.

Public Schools
Source: National Center for Education Statistics
Telephone: 202-502-7300
The National Center for Education Statistics' primary database on elementary and secondary public education in the United States. It is a comprehensive, annual, national statistical database of all public elementary and secondary schools and school districts, which contains data that are comparable across all states.

Private Schools
Source: National Center for Education Statistics
Telephone: 202-502-7300
The National Center for Education Statistics' primary database on private school locations in the United States.

Daycare Centers: Day Care Centers, Group & Family Homes
Source: Bureau of REgulatory Services
Telephone: 517-373-8300

Flood Zone Data: This data, available in select counties across the country, was obtained by EDR in 1999 from the Federal Emergency Management Agency (FEMA). Data depicts 100-year and 500-year flood zones as defined by FEMA.

NWI: National Wetlands Inventory. This data, available in select counties across the country, was obtained by EDR in 2002 and 2005 from the U.S. Fish and Wildlife Service.

State Wetlands Data: Wetlands Inventory
Source: Department of Natural Resources
Telephone: 517-241-2254

Scanned Digital USGS 7.5' Topographic Map (DRG)
Source: United States Geologic Survey
A digital raster graphic (DRG) is a scanned image of a U.S. Geological Survey topographic map. The map images are made by scanning published paper maps on high-resolution scanners. The raster image is georeferenced and fit to the Universal Transverse Mercator (UTM) projection.

STREET AND ADDRESS INFORMATION

© 2009 Tele Atlas North America, Inc. All rights reserved. This material is proprietary and the subject of copyright protection and other intellectual property rights owned by or licensed to Tele Atlas North America, Inc. The use of this material is subject to the terms of a license agreement. You will be held liable for any unauthorized copying or disclosure of this material.

APPENDIX D

AERIAL PHOTOGRAPHS

Goodwill Industries
2700 N. Pitcher St.
Kalamazoo, MI 49004

Inquiry Number: 2394830.4
January 09, 2009

The EDR Aerial Photo Decade Package

EDR® Environmental Data Resources Inc

440 Wheelers Farms Road
Milford, CT 06461
800.352.0050
www.edrnet.com

EDR Aerial Photo Decade Package

Environmental Data Resources, Inc. (EDR) Aerial Photo Decade Package is a screening tool designed to assist environmental professionals in evaluating potential liability on a target property resulting from past activities. EDRs professional researchers provide digitally reproduced historical aerial photographs, and when available, provide one photo per decade.

When delivered electronically by EDR, the aerial photo images included with this report are for ONE TIME USE ONLY. Further reproduction of these aerial photo images is prohibited without permission from EDR. For more information contact your EDR Account Executive.

Thank you for your business.
Please contact EDR at 1-800-352-0050
with any questions or comments.

Disclaimer - Copyright and Trademark Notice

This Report contains certain information obtained from a variety of public and other sources reasonably available to Environmental Data Resources, Inc. It cannot be concluded from this Report that coverage information for the target and surrounding properties does not exist from other sources. **NO WARRANTY EXPRESSED OR IMPLIED, IS MADE WHATSOEVER IN CONNECTION WITH THIS REPORT. ENVIRONMENTAL DATA RESOURCES, INC. SPECIFICALLY DISCLAIMS THE MAKING OF ANY SUCH WARRANTIES, INCLUDING WITHOUT LIMITATION, MERCHANTABILITY OR FITNESS FOR A PARTICULAR USE OR PURPOSE. ALL RISK IS ASSUMED BY THE USER. IN NO EVENT SHALL ENVIRONMENTAL DATA RESOURCES, INC. BE LIABLE TO ANYONE, WHETHER ARISING OUT OF ERRORS OR OMISSIONS, NEGLIGENCE, ACCIDENT OR ANY OTHER CAUSE, FOR ANY LOSS OF DAMAGE, INCLUDING, WITHOUT LIMITATION, SPECIAL, INCIDENTAL, CONSEQUENTIAL, OR EXEMPLARY DAMAGES. ANY LIABILITY ON THE PART OF ENVIRONMENTAL DATA RESOURCES, INC. IS STRICTLY LIMITED TO A REFUND OF THE AMOUNT PAID FOR THIS REPORT.** Purchaser accepts this Report AS IS. Any analyses, estimates, ratings, environmental risk levels or risk codes provided in this Report are provided for illustrative purposes only, and are not intended to provide, nor should they be interpreted as providing any facts regarding, or prediction or forecast of, any environmental risk for any property. Only a Phase I Environmental Site Assessment performed by an environmental professional can provide information regarding the environmental risk for any property. Additionally, the information provided in this Report is not to be construed as legal advice.

Copyright 2009 by Environmental Data Resources, Inc. All rights reserved. Reproduction in any media or format, in whole or in part, of any report or map of Environmental Data Resources, Inc., or its affiliates, is prohibited without prior written permission.

EDR and its logos (including Sanborn and Sanborn Map) are trademarks of Environmental Data Resources, Inc. or its affiliates. All other trademarks used herein are the property of their respective owners.

Date EDR Searched Historical Sources:

Aerial Photography January 09, 2009

Target Property:

2700 N. Pitcher St.

Kalamazoo, MI 49004

Year	***Scale***	***Details***	***Source***
1938	Aerial Photograph. Scale: 1"=500'	Flight Year: 1938	AAA
1955	Aerial Photograph. Scale: 1"=500'	Flight Year: 1955 Photo Not Available - Image missing from collection	CSS
1960	Aerial Photograph. Scale: 1"=500'	Flight Year: 1960	CSS
1967	Aerial Photograph. Scale: 1"=500'	Flight Year: 1967	ASCS
1974	Aerial Photograph. Scale: 1"=600'	Flight Year: 1974	ASCS
1981	Aerial Photograph. Scale: 1"=600'	Flight Year: 1981	NHAP
1992	Aerial Photograph. Scale: unknown	Flight Year: 1992 Best Copy Available from original source	FSA
2005	Aerial Photograph. Scale: 1"=500'	Flight Year: 2005	EDR

INQUIRY #: 2394830.4
YEAR: 1938
= 500'
N

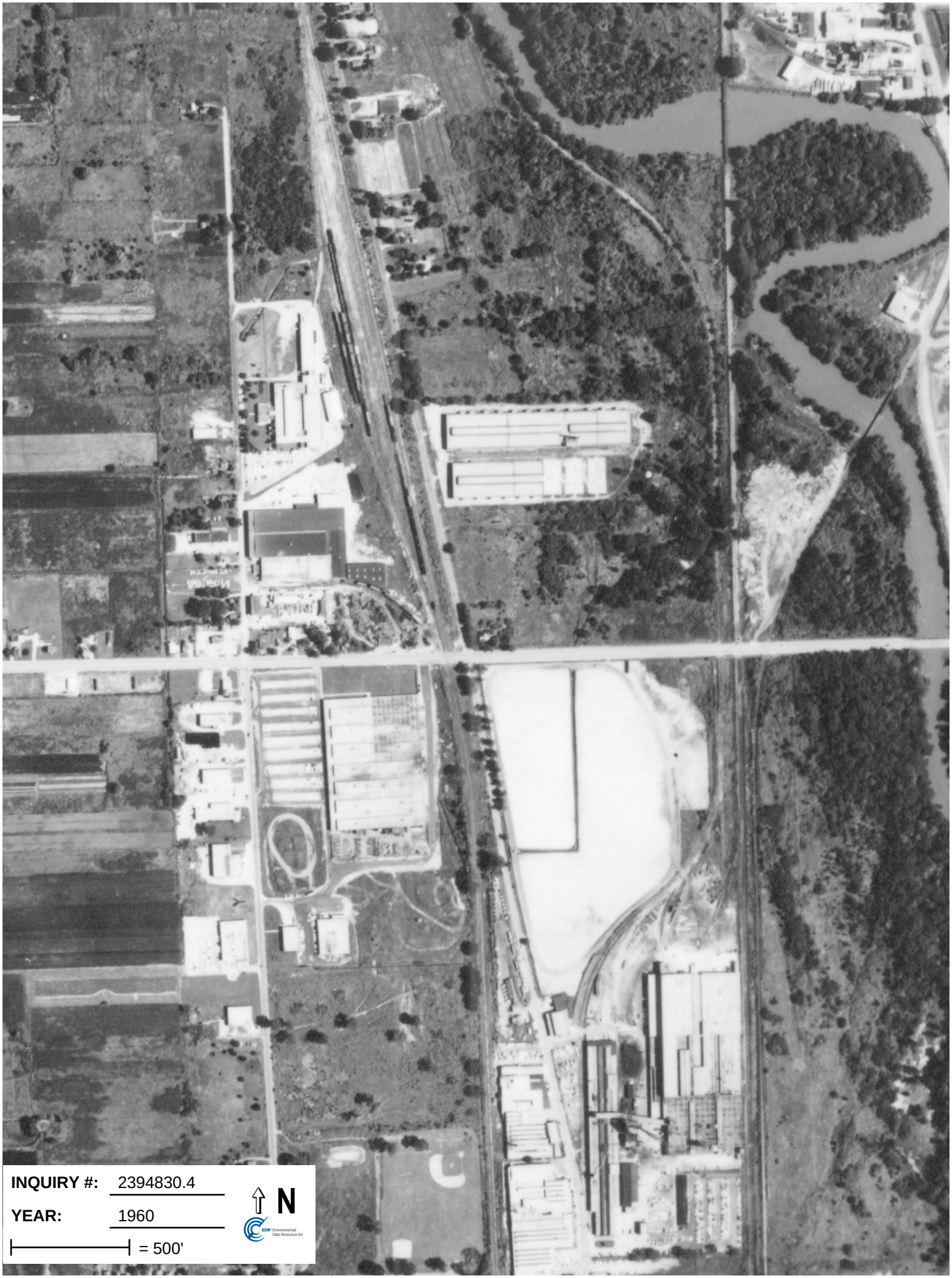
INQUIRY #: 2394830.4
YEAR: 1960
= 500'
N

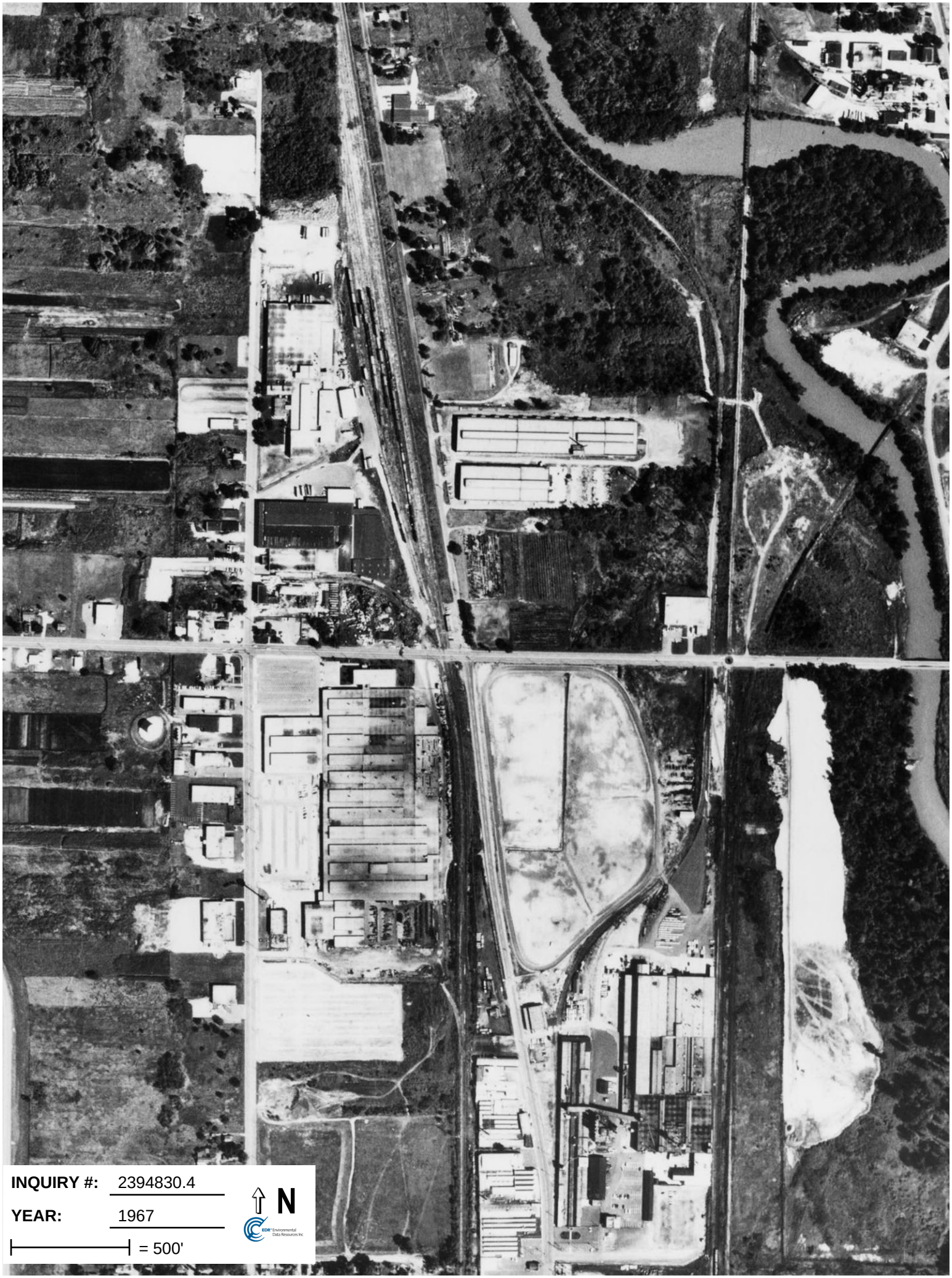
INQUIRY #: 2394830.4
YEAR: 1967
= 500'
N
EDR Environmental Data Resources Inc

INQUIRY #: 2394830.4
YEAR: 1974
= 600'
N

INQUIRY #: 2394830.4
YEAR: 1981
= 600'
N

INQUIRY #: 2394830.4
YEAR: 1992
= unknown
N

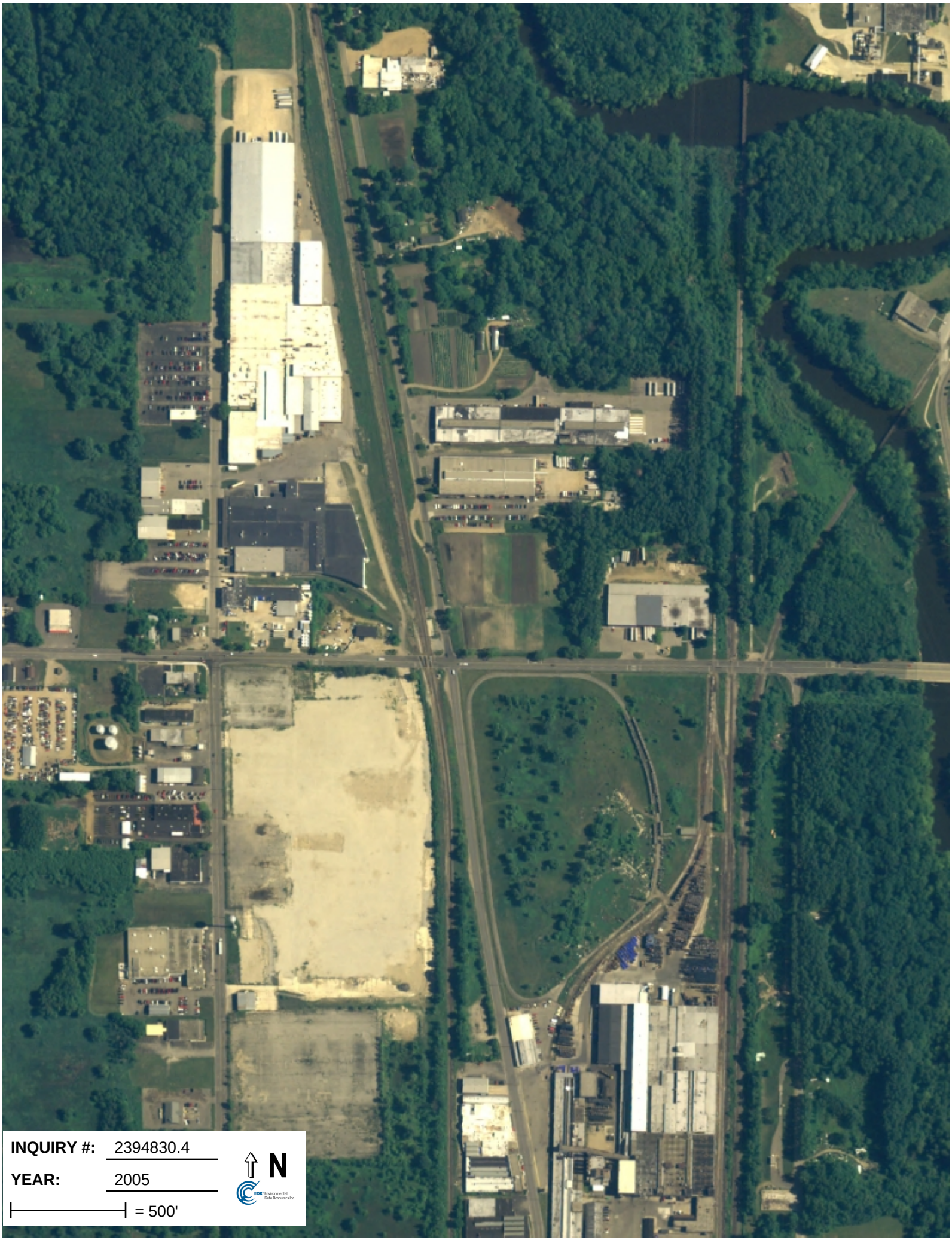
INQUIRY #: 2394830.4
YEAR: 2005
= 500'
N

APPENDIX E

SANBORN MAPS

Goodwill Industries
2700 N. Pitcher St.
Kalamazoo, MI 49004

Inquiry Number: 2394830.3
January 09, 2009

Certified Sanborn® Map Report

EDR® Environmental Data Resources Inc

440 Wheelers Farms Road
Milford, CT 06461
800.352.0050
www.edrnet.com

Certified Sanborn® Map Report

1/09/09

Site Name:
Goodwill Industries
2700 N. Pitcher St.
Kalamazoo, MI 49004

EDR Inquiry # 2394830.3

Client Name:
Envirologic Technologies, Inc.
2960 Interstate Parkway
Kalamazoo, MI 49048

Contact: Erik Peterson

EDR® Environmental Data Resources Inc

The complete Sanborn Library collection has been searched by EDR, and fire insurance maps covering the target property location provided by Envirologic Technologies, Inc. were identified for the years listed below. The certified Sanborn Library search results in this report can be authenticated by visiting www.edrnet.com/sanborn and entering the certification number. Only Environmental Data Resources Inc. (EDR) is authorized to grant rights for commercial reproduction of maps by Sanborn Library LLC, the copyright holder for the collection.

Certified Sanborn Results:

Site Name: Goodwill Industries
Address: 2700 N. Pitcher St.
City, State, Zip: Kalamazoo, MI 49004
Cross Street:
P.O. # 080503-B
Project: 080503
Certification # F8B7-4BE7-A849

Maps Provided:

1972
1965
1958
1950

Sanborn® Library search results
Certification # F8B7-4BE7-A849

The Sanborn Library includes more than 1.2 million Sanborn fire insurance maps, which track historical property usage in approximately 12,000 American cities and towns. Collections searched:

- ✔ Library of Congress
- ✔ University Publications of America
- ✔ EDR Private Collection

Limited Permission To Make Copies

Envirologic Technologies, Inc. (the client) is permitted to make up to THREE photocopies of this Sanborn Map transmittal and each fire insurance map accompanying this report solely for the limited use of its customer. No one other than the client is authorized to make copies. Upon request made directly to an EDR Account Executive, the client may be permitted to make a limited number of additional photocopies. This permission is conditioned upon compliance by the client, its customer and their agents with EDR's copyright policy; a copy of which is available upon request.

Disclaimer - Copyright and Trademark notice

This Report contains certain information obtained from a variety of public and other sources reasonably available to Environmental Data Resources, Inc. It cannot be concluded from this Report that coverage information for the target and surrounding properties does not exist from other sources. NO WARRANTY EXPRESSED OR IMPLIED, IS MADE WHATSOEVER IN CONNECTION WITH THIS REPORT. ENVIRONMENTAL DATA RESOURCES, INC. SPECIFICALLY DISCLAIMS THE MAKING OF ANY SUCH WARRANTIES, INCLUDING WITHOUT LIMITATION, MERCHANTABILITY OR FITNESS FOR A PARTICULAR USE OR PURPOSE. ALL RISK IS ASSUMED BY THE USER. IN NO EVENT SHALL ENVIRONMENTAL DATA RESOURCES, INC. BE LIABLE TO ANYONE, WHETHER ARISING OUT OF ERRORS OR OMISSIONS, NEGLIGENCE, ACCIDENT OR ANY OTHER CAUSE, FOR ANY LOSS OF DAMAGE, INCLUDING, WITHOUT LIMITATION, SPECIAL, INCIDENTAL CONSEQUENTIAL, OR EXEMPLARY DAMAGES. ANY LIABILITY ON THE PART OF ENVIRONMENTAL DATA RESOURCES, INC. IS STRICTLY LIMITED TO A REFUND OF THE AMOUNT PAID FOR THIS REPORT. Purchaser accepts this Report "AS IS". Any analyses, estimates, ratings, environmental risk levels or risk codes provided in this Report are provided for illustrative purposes only, and are not intended to provide, nor should they be interpreted as providing any facts regarding, or prediction or forecast of, any environmental risk for any property. Only a Phase I Environmental Site Assessment performed by an environmental professional can provide information regarding the environmental risk for any property. Additionally, the information provided in this Report is not to be construed as legal advice.

Copyright 2009 by Environmental Data Resources, Inc. All rights reserved. Reproduction in any media or format, in whole or in part, of any report or map of Environmental Data Resources, Inc., or its affiliates, is prohibited without prior written permission.

EDR and its logos (including Sanborn and Sanborn Map) are trademarks of Environmental Data Resources, Inc. or its affiliates. All other trademarks used herein are the property of their respective owners.

Certified Sanborn® Map Report Enhancements for 2009

The accompanying Certified Sanborn Map Report reflects a number of enhancements that make it easier for you to review these historical maps. EDR has digitally joined together the more than one million fire insurance maps from the Sanborn Library collection so that your target property is centered, making it easier for you to review adjoining properties. Here is a list of the new features:

· Your target property is centered on each map. You can quickly locate your target property and view adjoining properties. Plus, adjoining properties are included more often, reducing your need to refer to additional maps.

· All maps are now displayed at a uniform scale. This makes it easier for you to view changes to the property over time.

· We've increased coverage by adding thousands of new maps from 40 cities for years 1994-2007.

· A new Map Key and Sheet Thumbnails let you reference sheet numbers, year and volume of original Sanborn Map panels used for this report.

For more information about the new enhancements to the Certified Sanborn Map Report, contact your EDR representative at 800-352-0050.

Sanborn Sheet Thumbnails

This Certified Sanborn Map Report is based upon the following Sanborn Fire Insurance map sheets.

1972 Source Sheets

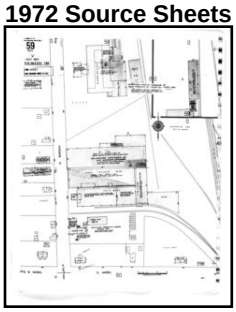

Volume 1, Sheet 59

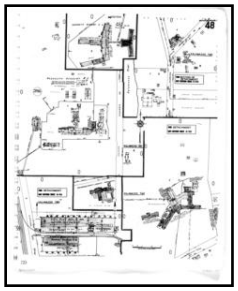

Volume 1, Sheet 48

Volume 1, Sheet KEYMAP

1965 Source Sheets

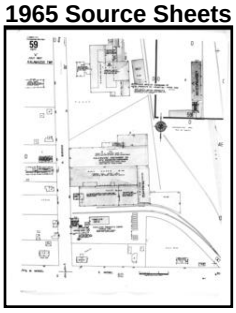

Volume 1, Sheet 59

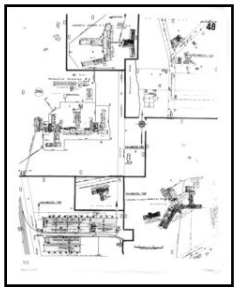

Volume 1, Sheet 48

Volume 1, Sheet KEYMAP

1958 Source Sheets

Volume 1, Sheet 59

Volume 1, Sheet KEYMAP

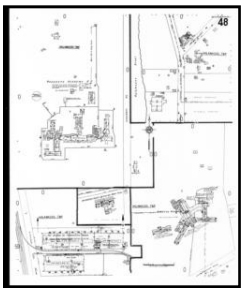

Volume 1, Sheet 48

1950 Source Sheets

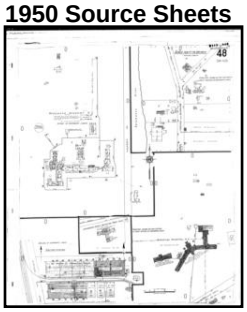

Volume 1, Sheet 48

APPENDIX F

FOIAR DOCUMENTATION (REQUESTS AND RESPONSES)

MATERIAL PROVIDED MAY NOT REPRESENT ALL PUBLICLY AVAILABLE FILE INFORMATION

TRANSACTION REPORT

THU.JAN.08.2009 02:05 PM

FAX(TX)

#	DATE	START T.	RECEIVER	COM.TIME	PAGE	TYPE/NOTE	FILE
001	JAN.08	02:04PM	12695679440	0:00:31	2	OK SG3	4415

ENVIROLOGIC
TECHNOLOGIES, INC.

2960 INTERSTATE PARKWAY • KALAMAZOO, MICHIGAN 49048, 269-342-1100 • FAX 269-342-4945

Fax Transmittal

To: **FOIA Liaison – MDEQ – Kzoo**

Divisions: **RRD; WHMD; LWMD; AQD**

Fax Number: **(269)-567-9440**

Phone Number: **(269)-567-3500**

Number of Pages: **2**

Date: **January 8, 2009**

From: **Erik D. Peterson**

Message

For Billing Purposes please reference 080503A

Dear FOIA Liaison:

In accordance with the provisions of the Freedom of Information Act, Envirologic Technologies, Inc. (Envirologic) would like to review all available file information for the following sites:

Goodwill Industries
2700 N. Pitcher St.
Kalamazoo, MI
Facility ID # 00003454

Mall City Containers
2710 N. Pitcher St.
Kalamazoo, MI
SHWS # 39000247
Facility ID # 00013094

521 E. Mosel St.
Kalamazoo, MI
BEA # 755

Eaton Corporation
222 E. Mosel St.
Kalamazoo, MI
Facility ID # 00038824

ENVIROLOGIC
TECHNOLOGIES, INC.

2960 INTERSTATE PARKWAY • KALAMAZOO, MICHIGAN 49048, 269-342-1100 • FAX 269-342-4945

Haviland Products
2722 N. Burdick St.
Kalamazoo, MI
Facility ID # 00007314

Kalamazoo Oil Company
2601 N. Burdick St.
Kalamazoo, MI
Facility ID # 00015091

Please contact me by phone at 269-342-1100 to schedule a file review or with an estimate of copying costs. Thank you for your time and consideration in support of this request.

Erik Peterson

Sincerely,
Erik D. Peterson

ENVIROLOGIC TECHNOLOGIES, INC.

2960 INTERSTATE PARKWAY • KALAMAZOO, MICHIGAN 49048, 269-342-1100 • FAX 269-342-4945

Fax Transmittal

To:	FOIA Liaison – MDEQ – Kzoo
Divisions:	RRD; WHMD; LWMD; AQD
Fax Number:	(269)-567-9440
Phone Number:	(269)-567-3500
Number of Pages:	2
Date:	January 8, 2009
From:	Erik D. Peterson

FWI283

10 Copies.

Message For Billing Purposes please reference 080503A

Dear FOIA Liaison:

In accordance with the provisions of the Freedom of Information Act, Envirologic Technologies, Inc. (Envirologic) would like to review all available file information for the following sites:

P11

Goodwill Industries
2700 N. Pitcher St.
Kalamazoo, MI
Facility ID # 00003454
Tanks
Closed *
NO

Mall City Containers
2710 N. Pitcher St.
Kalamazoo, MI
SHWS # 39000247
Facility ID # 00013094
Closed
NO

521 E. Mosel St.
Kalamazoo, MI
BEA # 755
NO
NO

Eaton Corporation
222 E. Mosel St.
Kalamazoo, MI
Facility ID # 00038824
Closed
NO

* closed files are in Lansing

Received
JAN 08 2009
DEQ-W&HMD-Kalamazoo

IF YOU HAVE ANY TROUBLE RECEIVING THIS MESSAGE OR YOU DID NOT RECEIVE THE SPECIFIED NUMBER OF PAGES, PLEASE CALL AT 269-342-1100.

H:\PWDATA\TEMPLATE\FAXSHEET.DOC

TRANSACTION REPORT

THU.JAN.08.2009 02:06 PM

FAX(TX)

#	DATE	START T.	RECEIVER	COM.TIME	PAGE	TYPE/NOTE	FILE
001	JAN.08	02:05PM	15173352245	0:00:17	1	OK SG3	4416

ENVIROLOGIC
TECHNOLOGIES, INC.

2960 INTERSTATE PARKWAY, KALAMAZOO, MICHIGAN 49048 PHONE:269-342-1100 • FAX 269-342-4945

Fax Message

To:	**Susan Vorce, FOIA Request**
Company:	**MDEQ - Lansing Headquarters**
Fax Number:	**517-335-2245**
Phone Number:	**517-335-7279**
Number of Pages:	**1**
Date:	**January 8, 2009**
From:	**Erik Peterson**

Message for billing purposes, please reference 080503

In accordance with the provisions of the Freedom of Information Act, Envirologic Technologies, Inc. (Envirologic) would like to review information you may have at the **MDEQ Lansing Headquarters** for the properties listed below.

Goodwill Industries
2700 N. Pitcher St.
Kalamazoo, MI
Facility ID # 00003454

Should you have any questions, please do not hesitate to contact me at (269) 342-1100. Thank you for your time and consideration in this matter.

ENVIROLOGIC TECHNOLOGIES, INC.

Erik D. Peterson

Erik D. Peterson
Project Manager

STATE OF MICHIGAN
DEPARTMENT OF ENVIRONMENTAL QUALITY
LANSING

JENNIFER M. GRANHOLM
GOVERNOR

STEVEN E. CHESTER
DIRECTOR

January 14, 2009

Mr. Erik D. Peterson
Envirologic Technologies, Inc.
2960 Interstate Parkway
Kalamazoo, MI 49048

Dear Mr. Peterson:

SUBJECT: Request for Disclosure of Official Files

This notice is issued in response to your January 8, 2009, request for information under the Freedom of Information Act (FOIA), MCL 15.231 *et seq.*, received on January 9, 2009. You have requested information that you describe as "Goodwill Industries, 2700 N. Pitcher St., Kalamazoo."

Your request will be forwarded to the Air Quality Division, Land and Water Management Division, Remediation and Redevelopment Division, Waste and Hazardous Materials Division, and Water Bureau. You will be receiving a letter from the divisions indicating whether records fitting your description are present.

Due to the forwarding of your request, it is necessary to issue a 10-business day extension until February 2, 2009, as permitted under Section 5(2)(d) of the Freedom of Information Act, 1976 PA 442, as amended.

In the future, to assure that you receive all documents maintained by the Department of Environmental Quality, submit your FOIA to the following address:

FOIA Coordinator
Michigan Department of Environmental Quality
P.O. Box 30473
Lansing, MI 48909-7973
Fax: 517-241-7428
vorces@michigan.gov

Sincerely,

Susan Vorce

Susan Vorce, FOIA Coordinator
Financial and Business Services Division
517-241-8166
517-241-7428 FAX

cc: 0525-E-09

MICHIGAN DEPARTMENT OF ENVIRONMENTAL QUALITY
KALAMAZOO DISTRICT OFFICE

7953 ADOBE ROAD
KALAMAZOO, MI 49009

TELEPHONE: 269-567-3500
FACSIMILE: 269-567-9440

FACSIMILE COVER SHEET

TO: Erik Peterson

COMPANY: Environmental Technologies Inc

FAX NO: 269-342-4945

FROM: Deborah

DIVISION: LWMD

PHONE: 269-567-3560

DATE: 1-9-08

5
NO. OF PAGES INCLUDING COVER SHEET

COMMENTS:

STATE OF MICHIGAN
DEPARTMENT OF ENVIRONMENTAL QUALITY
LANSING

JENNIFER M. GRANHOLM
GOVERNOR

STEVEN E. CHESTER
DIRECTOR

January 9, 2009

Mr. Erik Peterson
Envirologic Technologies, Inc.
2960 Interstate Parkway
Kalamazoo, Michigan 49048

Dear Mr. Peterson:

SUBJECT: Request for Disclosure of Official Files

Your Freedom of Information Act request received January 8, 2009, has been processed.

Enclosed are the following requested records: see attached.

No other documents were in the file.

Sincerely,

Deborah Buscher

Deborah Buscher
FOIA Liaison
Land and Water Management Division
269-567-3560

Enclosure

EQP1441 (8/05)

Land and Water Management Division
Michigan Department of Environmental Quality

01-39-0013-V Kalamazoo Field Office

County Kalamazoo
Town/Range 2S/11W Sections 0 0
Government Kalamazoo Township
Subdivision
Lot Claim
Waterbody wetland/Kalamazoo river
Tax Number

Location	Complainant	Owner	Contractor
north of 2600 pitcher st	MDEQ/LWMD staff	Larry Bartlet Fort Mills, SC (803) 548-2355	

Complaint

Mr. Bartlet has allowed excavators to dump material onto propety.
fill is in wetland and flood plain and kalamazoo river.

Parts	31	91	301	303	315	323	326	353	404	Aquatic	Marina	Other	GLBV
	X		X	X									

Status Closed: Lack of Information
Taken By Other File # ---
Staff Assigned Dustin Day File Loc

Dates

Date Received *Mar 27, 2001* S.I. Date Priority
Action Due Final Action *Sep 3, 2003*

Date	Who	Event
Sep 3, 2003	POYNTERL	Closed: Lack of Information
Mar 27, 2001	DAYDD	Owner: Bartlet, Larry
Mar 27, 2001	DAYDD	Complaint entered
Mar 27, 2001	DAYDD	Status:Pending: Site Invest

Special Interest: Section missing on application.

MICHIGAN DEPARTMENT OF ENVIRONMENTAL QUALITY

STORAGE TANK and SOLID WASTE SECTION
WASTE AND HAZARDOUS MATERIALS DIVISION

FAX

Today's Date: 1/14/09

Contact Person: Erik Peterson

Company/Division:

Telephone Number:

Fax Number: (269) 342-4945

Sender: Jim Lucas

Section/Unit: Storage Tank and Hazardous Waste Section
Department of Environmental Quality
Waste and Hazardous Materials Division
P.O. Box 30241
Lansing, MI 48909-7741

E-Mail
Telephone: 517-335-7279
Fax: 517-335-2245

Comments: Facility ID # 3454

Number of Pages (includes cover sheet) 14

Please call if you do not receive a fax with the above number of pages or if there are any discrepancies that need to be addressed.

Thank you.

John R. Jenkins Vocational Rehabilitation Center

Goodwill Industries of Southwestern Michigan

goodwill

2700 N. Pitcher St., Kalamazoo, MI. 49007 (616) 382-0490

February 19, 1991

STATE POLICE
RECEIVED
FEB 21 1991
FIRE MARSHAL DIVISION
LANSING, MICHIGAN

3454

Ms. Mary Ellen Parrott, Manager
Registration Unit
Fire Marshall Division
3705 West Jolly Road
P. O. Box 30157
Lansing, MI 48909

ISKC FEB 23 1991

Dear Ms. Parrott:

Thank you for bringing to a conclusion the status of our former underground gasoline storage tank. It was removed several years ago with complete assurance by official available at that time that our ground around the tank was not contaminated.

A few months ago I completed a survey indicating that the tank had been removed and distributed according to the regulations at the time.

We never expected to receive a notice requiring payment of $100.00 registration fee since we had done all we understood we were to do in the proper disposal of the storage tank.

Thank you for correcting your records and putting my mind at ease that we have met the environmental requirements for proper disposition of the storage tank and that we no longer owe the $100.00 fee.

With much appreciation,

David M. Davey
Executive Director

klt

cc: Accounting

Notification for Underground Storage Tanks

FORM APPROVED
OMB NO. 2050-0049
APPROVAL EXPIRES 6-30-88

FOR TANKS IN **MI**

RETURN COMPLETED FORM TO: Ground Water Quality Division, Department of Natural Resources, Box 30157, Lansing, MI 48909

RECEIVED MAY 07 1986 GQD-COMPLIANCE

I.D. Number: STATE USE ONLY 003454

Date Received

GENERAL INFORMATION

Notification is required by Federal law for all underground tanks that have been used to store regulated substances since January 1, 1974, that are in the ground as of May 8, 1986, or that are brought into use after May 8, 1986. The information requested is required by Section 9002 of the Resource Conservation and Recovery Act, (RCRA), as amended.

The primary purpose of this notification program is to locate and evaluate underground tanks that store or have stored petroleum or hazardous substances. It is expected that the information you provide will be based on reasonably available records, or, in the absence of such records, your knowledge, belief, or recollection.

Who Must Notify? Section 9002 of RCRA, as amended, requires that, unless exempted, owners of underground tanks that store regulated substances must notify designated State or local agencies of the existence of their tanks. Owner means—

(a) in the case of an underground storage tank in use on November 8, 1984, or brought into use after that date, any person who owns an underground storage tank used for the storage, use, or dispensing of regulated substances, and

(b) in the case of any underground storage tank in use before November 8, 1984, but no longer in use on that date, any person who owned such tank immediately before the discontinuation of its use.

What Tanks Are Included? Underground storage tank is defined as any one or combination of tanks that (1) is used to contain an accumulation of "regulated substances," and (2) whose volume (including connected underground piping) is 10% or more beneath the ground. Some examples are underground tanks storing: 1. gasoline, used oil, or diesel fuel, and 2. industrial solvents, pesticides, herbicides or fumigants.

What Tanks Are Excluded? Tanks removed from the ground are not subject to notification. Other tanks excluded from notification are:

1. farm or residential tanks of 1,100 gallons or less capacity used for storing motor fuel for noncommercial purposes;
2. tanks used for storing heating oil for consumptive use on the premises where stored;
3. septic tanks;
4. pipeline facilities (including gathering lines) regulated under the Natural Gas Pipeline Safety Act of 1968, or the Hazardous Liquid Pipeline Safety Act of 1979, or which is an intrastate pipeline facility regulated under State laws;
5. surface impoundments, pits, ponds, or lagoons;
6. storm water or waste water collection systems;
7. flow-through process tanks;
8. liquid traps or associated gathering lines directly related to oil or gas production and gathering operations;
9. storage tanks situated in an underground area (such as a basement, cellar, mineworking, drift, shaft, or tunnel) if the storage tank is situated upon or above the surface of the floor.

What Substances Are Covered? The notification requirements apply to underground storage tanks that contain regulated substances. This includes any substance defined as hazardous in section 101 (14) of the Comprehensive Environmental Response, Compensation and Liability Act of 1980 (CERCLA), with the exception of those substances regulated as hazardous waste under Subtitle C of RCRA. It also includes petroleum, e.g., crude oil or any fraction thereof which is liquid at standard conditions of temperature and pressure (60 degrees Fahrenheit and 14.7 pounds per square inch absolute).

Where To Notify? Completed notification forms should be sent to the address given at the top of this page.

When To Notify? 1. Owners of underground storage tanks in use or that have been taken out of operation after January 1, 1974, but still in the ground, must notify by May 8, 1986. 2. Owners who bring underground storage tanks into use after May 8, 1986, must notify within 30 days of bringing the tanks into use.

Penalties: Any owner who knowingly fails to notify or submits false information shall be subject to a civil penalty not to exceed $10,000 for each tank for which notification is not given or for which false information is submitted.

INSTRUCTIONS

Please type or print in ink all items except "signature" in Section V. **This form must by completed for each location containing underground storage tanks.** If more than 5 tanks are owned at this location, photocopy the reverse side, and staple continuation sheets to this form.

Indicate number of continuation sheets attached: 0

I. OWNERSHIP OF TANK(S)

Owner Name (Corporation, Individual, Public Agency, or Other Entity): GOODWILL INDUSTRIES OF S.W. MICHIGAN

Street Address: 2700 N. Pitcher St.

County: Kalamazoo

City: Kalamazoo State: MI ZIP Code: 49007

Area Code: 616 Phone Number: 382-0490

Type of Owner (*Mark all that apply* ☒)

- ☒ Current
- ☐ Former
- ☐ State or Local Gov't
- ☐ Federal Gov't (GSA facility I.D. no. _____)
- ☒ Private or Corporate
- ☐ Ownership uncertain

II. LOCATION OF TANK(S)

(If same as Section 1, mark box here ☒)

Facility Name or Company Site Identifier, as applicable

Street Address or State Road, as applicable

County

City (nearest) State ZIP Code

Indicate number of tanks at this location: 1

Mark box here if tank(s) are located on land within an Indian reservation or on other Indian trust lands ☐

III. CONTACT PERSON AT TANK LOCATION

Name (If same as Section I, mark box here ☐): Norman H. Friend

Job Title: Accounting Serv Dir

Area Code Phone Number: 616-382-0490

IV. TYPE OF NOTIFICATION

☐ Mark box here only if this is an amended or subsequent notification for this location.

V. CERTIFICATION (Read and sign after completing Section VI.)

I certify under penalty of law that I have personally examined and am familiar with the information submitted in this and all attached documents, and that based on my inquiry of those individuals immediately responsible for obtaining the information, I believe that the submitted information is true, accurate, and complete.

Name and official title of owner or owner's authorized representative: Norman H. Friend, Acctg Serv Dir

Signature: Norman H. Friend

Date Signed: 5/6/86

CONTINUE ON REVERSE SIDE

Owner Name (from Section I) Goodwill Industries Location (from Section II) Kalamazoo Page No. 1 of 1 Pages

VI. DESCRIPTION OF UNDERGROUND STORAGE TANKS *(Complete for each tank at this location.)*

Tank Identification No. (e.g., ABC-123), or Arbitrarily Assigned Sequential Number (e.g., 1,2,3...)	Tank No. 1	Tank No.	Tank No.	Tank No.	Tank No.
1. Status of Tank *(Mark all that apply ☒)* — Currently in Use	☐	☐	☐	☐	☐
Temporarily Out of Use	☐	☐	☐	☐	☐
Permanently Out of Use	☒	☐	☐	☐	☐
Brought into Use after 5/8/86	☐	☐	☐	☐	☐
2. Estimated Age (Years)	Unknown → 27 years				
3. Estimated Total Capacity (Gallons)	5000				
4. Material of Construction *(Mark one ☒)* — Steel	☐	☐	☐	☐	☐
Concrete	☐	☐	☐	☐	☐
Fiberglass Reinforced Plastic	☐	☐	☐	☐	☐
Unknown	☒	☐	☐	☐	☐
Other, Please Specify					
5. Internal Protection *(Mark all that apply ☒)* — Cathodic Protection	☐	☐	☐	☐	☐
Interior Lining (e.g., epoxy resins)	☐	☐	☐	☐	☐
None	☐	☐	☐	☐	☐
Unknown	☒	☐	☐	☐	☐
Other, Please Specify					
6. External Protection *(Mark all that apply ☒)* — Cathodic Protection	☐	☐	☐	☐	☐
Painted (e.g., asphaltic)	☐	☐	☐	☐	☐
Fiberglass Reinforced Plastic Coated	☐	☐	☐	☐	☐
None	☐	☐	☐	☐	☐
Unknown	☒	☐	☐	☐	☐
Other, Please Specify					
7. Piping *(Mark all that apply ☒)* — Bare Steel	☐	☐	☐	☐	☐
Galvanized Steel	☐	☐	☐	☐	☐
Fiberglass Reinforced Plastic	☐	☐	☐	☐	☐
Cathodically Protected	☐	☐	☐	☐	☐
Unknown	☒	☐	☐	☐	☐
Other, Please Specify					
8. Substance Currently or Last Stored in Greatest Quantity by Volume *(Mark all that apply ☒)* — **a. Empty**	☐	☐	☐	☐	☐
b. Petroleum					
Diesel	☐	☐	☐	☐	☐
Kerosene	☐	☐	☐	☐	☐
Gasoline (including alcohol blends)	☒	☐	☐	☐	☐
Used Oil	☐	☐	☐	☐	☐
Other, Please Specify					
c. Hazardous Substance	☐	☐	☐	☐	☐
Please Indicate Name of Principal CERCLA Substance					
OR Chemical Abstract Service (CAS) No.					
Mark box ☒ if tank stores a mixture of substances	☐	☐	☐	☐	☐
d. Unknown	☐	☐	☐	☐	☐
9. Additional Information (for tanks permanently taken out of service) — a. Estimated date last used (mo/yr)	8 / 83	/	/	/	/
b. Estimated quantity of substance remaining (gal.)	150				
c. Mark box ☒ if tank was filled with inert material (e.g., sand, concrete)	☐	☐	☐	☐	☐

RECEIVED AUG 15 1986 GOD-COMPLIANCE

REGISTRATION FOR UNDERGROUND STORAGE TANKS	STATE USE ONLY
Implementing Agency: MICHIGAN STATE POLICE - FIRE MARSHAL DIVISION	ID NUMBER 3454
TYPE OF NOTIFICATION: _____ New Facility _____ Amended _____ Closure	DATE RECEIVED _____
_____No. of Tanks at Facility _____No. of Continuation Sheets Attached	A. Date Entered into Computer _____ B. Data Entry Clerk Initials _____

INSTRUCTIONS: Please type or print in ink all items except "signature" in section V. This form must be for each location containing underground storage tanks. If more than five (5) tanks are owned at this location, photocopy the following sheets, and staple continuation sheets to the form. Highlight amended sections wherever applicable, however, pages 1 and 2 must always be completed.

Registration is required by federal law for all underground tanks that are being used, or have been used, to store regulated substances, unless the underground storage tank has been properly closed or removed and notification provided to the State Fire Marshal. The information requested is required by Section 9002 of the Resource Conservation and Recovery Act (RCRA), as amended.

WHO MUST NOTIFY? Unless exempted, owners of underground tanks that store or stored regulated substances must notify the State Fire Marshal of the existence of their tanks. Owner means any person who owns, or owned at the time of a release, an underground storage tank used for the storage, use, or dispensing of regulated substances.

WHAT TANKS ARE INCLUDED? Underground storage tank is defined as any one or combination of tanks that (1) is used to contain an accumulation of "regulated substances" and (2) whose volume (including connected underground piping) is 10% or more beneath the ground.

WHAT SUBSTANCES ARE COVERED? The notification requirements apply to underground storage tanks that contain regulated substances. This includes any substance defined as hazardous in Section 101(14) of the Comprehensive Environmental Response, Compensation and Liability Act (CERCLA), with the exception of those substances regulated as hazardous waste under Subtitle C of RCRA. It also includes petroleum, e.g., crude oil or any fraction thereof which is liquid at standard conditions of temperature and pressure (60 degrees Fahrenheit and 14.7 pounds per square inch absolute).

WHAT TANKS ARE EXCLUDED? Tanks that have been properly closed or removed prior to January 1, 1974 are not subject to registration. Other tanks excluded from notification are:

1. Farm or residential tanks of 1,100 gallons or less capacity used for storing motor fuel for farm or residential use;
2. Tanks used for storing heating oil for consumptive use on the premises where stored;
3. Septic tanks;
4. Pipeline facilities (including gathering lines) regulated under the Natural Gas Pipeline Safety Act of 1968, or the Hazardous Liquid Pipeline Safety Act of 1979;
5. Surface impoundments, pits, ponds, or lagoons;
6. Storm water or waste water collection systems;
7. Flow-through process tanks;
8. Liquid traps or associated gathering lines directly related to oil or gas production and gathering operations;
9. Storage tanks situated in an underground area (such as a basement, cellar, mineworking, drift, shaft or tunnel) if the storage tank is situated upon or above the surface of the floor.

WHERE TO NOTIFY? Send completed form to:

Department of State Police
Fire Marshal Division
Hazardous Materials Section
3705 W. Jolly Road
P.O. Box 30157
Lansing, MI 48909

MICHIGAN STATE POLICE
JUL 26 1990
FIRE MARSHAL DIVISION
HAZARDOUS MATERIALS SECTION

Authority: Section 9002 of the Resource Conservation and Recovery Act (RCRA), as amended.

Compliance: Required

Penalties: Any owner who knowingly fails to notify or submits false information shall be subject to a civil penalty not to exceed $10,000 for each tank for which notification is not given or for which false information is submitted.

I. OWNERSHIP OF TANKS	II. LOCATION OF TANKS
	IF SAME AS SECTION I, PLEASE CHECK X
GOODWILL INDUSTRIES OF S.W. MICHIGAN Owner Name (corporation/individual, etc)	Facility Name or Co. Site Identifier
2700 NORTH PITCHER STREET Street Address	Street Address (P.O. Box not acceptable)
KALAMAZOO MI 49007 City State Zip	City State Zip
KALAMAZOO KALAMAZOO County	County Township
(616) 382-0490 Telephone (including area code)	Telephone including area code)

III. TYPE OF OWNER

- [ ] Federal Government
- [ ] Commercial
- [ ] State Government
- [ ] Private
- [ ] Local Government
- Non-Profit

IV. INDIAN LANDS

Tanks are located on land within an Indian Reservation or on other trust lands. [ ]

Tanks are owned by native American nation, tribe, or individual. [ ]

Tribe or Nation: _____

V. TYPE OF FACILITY

Select the Appropriate Facility Description:

____Gas Station	____Local Government	____Contractor
____Petroleum Distributor	____State Government	____Trucking/Transport
____Air Taxi(airline)	____Federal-Non Military	____Utilities
____Aircraft Owner	____Federal-Military	____Residential
____Auto Dealership	____Commercial	____Farm
____Railroad	____Industrial	____Other (explain) Vocational Rehab.

VI. CONTACT PERSON IN CHARGE OF TANKS

Name	Job Title	Phone (area code)

VII. FINANCIAL RESPONSIBILITY

I have met the financial responsibility requirements in accordance with 40 CFR Subpart H [ ]

Check All That Apply:

____Self Insurance	____Guarantee	____State Funds
____Commercial Insurance	____Surety Bond	____Trust Fund
____Risk Retention Group	____Letter of Credit	____Other Method Allowed (please specify) _____

VIII. CERTIFICATION

(Read and sign after completing all sections)

I certify under penalty of law that I have personally examined and am familiar with the information submitted in this and all attached documents, and that based on my inquiry of those individuals immediately responsible for obtaining the information, I believe that the submitted information is true, accurate and complete.

Name and official title of owner or owner's authorized representative (PRINT)	Signature	Date
David M. Davey, Executive Director	David M. Davey Exp Dir	8/24/96

IX. DESCRIPTION OF UNDERGROUND STORAGE TANKS (Complete for each tank at this location)

Tank Identification Number	Tank#___	Tank#___	Tank#___	Tank#___	Tank#___
1. Status of Tanks (check one)					
Currently In Use					
Temporarily Out of Use**					
Permanently Out of Use**	X				
Amendment of Information					
** *Also complete Section X*					
2. Date of Installation					
3. Estimated Total Capacity (gal)					
4. Material of Construction (Mark All That Apply)					
Asphalt Coated or Bare Steel					
Cathodically Protected Steel					
Epoxy Coated Steel					
Composite (Steel with Fiberglass)					
Fiberglass Reinforced Plastic					
Lined Interior					
Double Walled					
Polyethylene Tank Jacket					
Excavation Liner					
Concrete					
Unknown					
Other, please specify					
Has tank been repaired?					
5. Piping Material (all that apply)					
Bare Steel					
Galvanized Steel					
Fiberglass Reinforced Plastic					
Copper					
Cathodically Protected					
Double Walled					
Secondary Containment					
Unknown					
Other, please specify					
6. Piping (type)(all that apply)					
Suction: no valve at tank					
Suction: valve at tank					
Pressure					
Gravity Fed					
Has piping been repaired?					

Tank Identification Number	Tank#___	Tank#___	Tank#___	Tank#___	Tank#___
7. Substance Currently or Last Stored in Greatest Quantity by Volume					
Gasoline	☐	☐	☐	☐	☐
Diesel	☐	☐	☐	☐	☐
Gasohol	☐	☐	☐	☐	☐
Kerosene	☐	☐	☐	☐	☐
Fuel Oil (Not for Consumptive Use on Premises)	☐	☐	☐	☐	☐
Used Oil	☐	☐	☐	☐	☐
Other, please specify	___	___	___	___	___
Hazardous Substance CERCLA Name and/or CAS Number	☐ ___	☐ ___	☐ ___	☐ ___	☐ ___
Mixture of Substances Please Specify	☐ ___	☐ ___	☐ ___	☐ ___	☐ ___

X. TANKS OUT OF USE OR CHANGE IN SERVICE

1. Closing of Tank					
A. Estimated Date Last Used (mo/day/yr)	___	___	___	___	___
B. Estimated Date Tank Closed (mo/day/yr)	___	___	___	___	___
C. Tank was Removed from Ground	☒	☐	☐	☐	☐
D. Tank Filled with Inert Material	☐	☐	☐	☐	☐
Describe type of fill used and reason tank was not removed.	___	___	___	___	___
E. Change In Service	☐	☐	☐	☐	☐
2. Site Assessment Completed	☐	☐	☐	☐	☐
Evidence of a Leak Detected	☐	☐	☐	☐	☐

-Please continue on page 5-

XI. CERTIFICATION OF COMPLIANCE (Complete for all new and upgraded tanks at this location)

Tank Identification Number	Tank#___	Tank#___	Tank#___	Tank#___	Tank#___
1. Installation					
A. Installer certified by tank and piping manufacturers.	☐	☐	☐	☐	☐
B. Installer certified or licensed by the implementing agency.	☐	☐	☐	☐	☐
C. Installation inspected by a registered engineer.	☐	☐	☐	☐	☐
D. Installation inspected and approved by implementing agency.	☐	☐	☐	☐	☐
E. Manufacturer's installation Checklists have been completed.	☐	☐	☐	☐	☐
F. Another method allowed by State agency. Please specify.	_____	_____	_____	_____	_____

2. Release Detection (Mark all that apply)	TANK	PIPE	TANK	PIPE	TANK	PIPE	TANK	PIPE	TANK	PIPE
A. Manual (static) tank gauging	☐	☐	☐	☐	☐	☐	☐	☐	☐	☐
B. Tank tightness testing	☐	☐	☐	☐	☐	☐	☐	☐	☐	☐
C. Inventory control	☐	☐	☐	☐	☐	☐	☐	☐	☐	☐
D. Automatic tank gauging	☐	☐	☐	☐	☐	☐	☐	☐	☐	☐
E. Vapor monitoring	☐	☐	☐	☐	☐	☐	☐	☐	☐	☐
F. Groundwater monitoring	☐	☐	☐	☐	☐	☐	☐	☐	☐	☐
G. Interstitial monitoring double walled tank/piping	☐	☐	☐	☐	☐	☐	☐	☐	☐	☐
H. Interstitial monitoring secondary containment	☐	☐	☐	☐	☐	☐	☐	☐	☐	☐
I. Automatic line leak detectors	☐	☐	☐	☐	☐	☐	☐	☐	☐	☐
J. Line tightness testing	☐	☐	☐	☐	☐	☐	☐	☐	☐	☐
K. Other method allowed by implementing agency. Specify	_____		_____		_____		_____		_____	

3. Spill and Overfill Protection					
A. Overfill device installed	☐	☐	☐	☐	☐
B. Spill device installed	☐	☐	☐	☐	☐

OATH: I certify the information concerning installation that is provided in Section XI is true to the best of my belief and knowledge.

Installer: _____ Name _____ Signature _____ Date

_____ Position _____ Company

John R. Jenkins Vocational Rehabilitation Center

Goodwill Industries of Southwestern Michigan

goodwill

2700 N. Pitcher St., Kalamazoo, MI. 49007 (616) 382-0490

July 24, 1990

Ms. Mary Ellen Parrott, Manager
Registration Unit
Department of State Police
Fire Marshall Division
Hazardous Materials Section
3705 West Jolly Road
P. O. Box 30157
Lansing, MI 48909

MICHIGAN STATE POLICE
JUL 26 1990
FIRE MARSHAL DIVISION
HAZARDOUS MATERIALS SECTION

Dear Ms. Parrott:

We received your invoice and the registration forms for underground storage tanks.

We have not had an underground tank since April, 1987 when it was removed.

There were no problems with the tank but we were not using it nor did we have plans to continue pumping gasoline for use by our trucks. The pump price and the tank price were nearly identical at our low volume so there was no cost savings to us.

An organization called A.P.E.C. Ltd. of Mattawan had the tank removed for us and they took care of the tank.

The corrected registration form is enclosed. I hope this meets with your approval. We were not aware of any further registration or paperwork necessary to notify someone back then about the tank removal.

If there are any other questions I will try to answer them.

Sincerely,

David M. Davey
Executive Director

klt

Enclosures

STATE OF MICHIGAN
DEPARTMENT OF ENVIRONMENTAL QUALITY
LANSING

JENNIFER M. GRANHOLM
GOVERNOR

STEVEN E. CHESTER
DIRECTOR

August 03, 2007

CERTIFIED MAIL

Goodwill Ind. Of S.W. Michigan
2700 N Pitcher St
Kalamazoo, MI 49004-3490

Dear Goodwill Ind. Of S.W. Michigan :

SUBJECT: Facility ID No. 00003454, Confirmed Release No. C-0148-07
Goodwill Ind. Of S.w. Michigan
2700 N Pitcher St, Kalamazoo, MI 49004-3490, Kalamazoo County

On July 20, 2007, the Department of Environmental Quality (DEQ), Waste and Hazardous Materials Division (WHMD), was notified of a release of a regulated substance from an underground storage tank (UST) system at the subject location. Enclosed is a copy of the confirmed release report.

Pursuant to Part 213, Leaking Underground Storage Tanks, of the natural Resources and Environmental Protection Act, 1994 PA 451, as amended, you are responsible for hiring a Qualified Underground Storage Tank Consultant to conduct the required corrective actions at this location. Please see the enclosed information regarding the hiring of a QC. If you do not agree that you are responsible for conducting corrective actions at this facility, you may submit supporting documentation to the Remediation and Redevelopment Division (RRD) of the DEQ within 30 days from receipt of this letter that demonstrates you are not responsible for the release.

The RRD may audit or oversee all aspects of corrective actions undertaken pursuant to Part 213. Please be advised that the owner or operator may be subject to penalties for not submitting the reports outlined in Part 213. In addition, Section 21324 of Part 213 provides that a person who submits, or causes to be submitted, false or misleading information may be prosecuted for fraud.

Please note that you are required to notify the WHMD of any changes to your UST system using the form EQP3821 Registration of Underground Storage Tanks.

Please include the facility identification number in any further communications with the DEQ. Correspondence, including reports required under Part 213, should be submitted to the RRD Kalamazoo District Office, 7953 Adobe Road, Kalamazoo, MI 49009-5025. Should you have questions regarding this letter, or need additional information, please contact the Kalamazoo District Office at 269-567-3500.

Sincerely,

Jim Lucas
Storage Tank Unit
Waste and Hazardous Materials Division

Enclosures

cc: Kalamazoo District Office, RRD

MICHIGAN DEPARTMENT OF ENVIRONMENTAL QUALITY – WASTE AND HAZARDOUS MATERIALS DIVISION
PO BOX 30241, LANSING, MI 48909-7741, Phone 517-335-2690, Fax 517-335-2245, E-mail DEQ-STD-TANKS@state.mi.us

RELEASE REPORT: ☐ SUSPECTED ☒ CONFIRMED

THIS INFORMATION IS REQUIRED UNDER 1994 PA 451, AS AMENDED (Act 451). FAILURE TO COMPLY WITH THE PROVISIONS OF THIS ACT MAY RESULT IN A MISDEMEANOR AND/OR CIVIL PENALTIES NOT TO EXCEED $5000 PER DAY, PER TANK.

INSTRUCTIONS: This form applies to releases of petroleum and hazardous substances from underground storage tanks regulated under Part 211, Underground Storage Tanks, of the Natural Resources and Environmental Protection Act, 1994 PA 451, as amended (PA 451).

The owner or operator must report suspected and confirmed releases to the Waste And Hazardous Materials Division (WHMD) within 24 hours of discovery. The report may be made by a consultant on behalf of the owner/operator. Phone 1-800-MICHUST, FAX this form to 517-335-2245, or submit the web form from the WHMD web site www.state.mi.us/std. All information on this form must be provided regardless of whether the release is reported by telephone, FAX, or web form. For further information see Page 2.

WHMD USE ONLY

FACILITY NUMBER 2454	ENTRY DATE 8/3/07
UPGRADE/CANCEL DATE —	INCIDENT NUMBER C-0148-07
DATE REPORTED 7/20/07	TIME REPORTED 1:00 ☐ AM ☒ PM
REPORTED BY: ☐ PHONE ☒ FAX ☐ VOICE MAIL ☐ E-MAIL ☐ REGULAR MAIL	
Signature: James Cummins	

PERSON REPORTING RELEASE: Ralph Freed	COMPANY (IF NOT OWNER/OPERATOR): Flis & Vandenbrink	TELEPHONE NUMBER: (269 385-0011
TANK REMOVAL CONTRACTOR: NA	CONTRACTOR CONTACT: NA	CONTRACTOR TELEPHONE NUMBER: ( ) NA

I. OWNERSHIP OF TANKS

NAME OF OWNER (CORPORATION, INDIVIDUAL, ETC.): Good will Industries		
STREET ADDRESS: 420 E. Alcott		
CITY: Kalamazoo	STATE: MI	ZIP CODE: 49001
TELEPHONE NUMBER: (269) 382-0490		

II. LOCATION OF TANKS

FACILITY NAME OR COMPANY SITE IDENTIFIER: Good will Industries			
STREET ADDRESS (P O Box Not Acceptable): 2700 N. Pitcher St			
CITY: Kalamazoo	COUNTY: Kalamazoo	STATE: MI	ZIP CODE: 49004
TELEPHONE NUMBER: ( )			
CONTACT PERSON FOR LOCATION: John Dillworth			

DATE RELEASE DISCOVERED:
TIME RELEASE DISCOVERED: ☐ AM ☒ PM 1:20

TANK NUMBER[1] (if known)	1				
SIZE OF TANK (gallons)	unk				
SUBSTANCE RELEASED	unk				
CAUSE OF RELEASE (Check all that apply)	☐ Tank ☒ Piping ☐ Spill Protection ☐ Overfill Protection ☒ Dispenser ☐ Unknown ☐ Other (provide details in comments)	☐ Tank ☐ Piping ☐ Spill Protection ☐ Overfill Protection ☐ Dispenser ☐ Unknown ☐ Other (provide details in comments)	☐ Tank ☐ Piping ☐ Spill Protection ☐ Overfill Protection ☐ Dispenser ☐ Unknown ☐ Other (provide details in comments)	☐ Tank ☐ Piping ☐ Spill Protection ☐ Overfill Protection ☐ Dispenser ☐ Unknown ☐ Other (provide details in comments)	☐ Tank ☐ Piping ☐ Spill Protection ☐ Overfill Protection ☐ Dispenser ☐ Unknown ☐ Other (provide details in comments)
HOW WAS LEAK DETECTED (Check all that apply) under dispenser	☐ Tank Removal ☐ Inventory Records ☐ Repairs ☒ Stained Soil ☒ Petroleum Odors ☐ Analytical Data ☐ Free Product and/or Oil Sheen in Groundwater	☐ Tank Removal ☐ Inventory Records ☐ Repairs ☐ Stained Soil ☐ Petroleum Odors ☐ Analytical Data ☐ Free Product and/or Oil Sheen in Groundwater	☐ Tank Removal ☐ Inventory Records ☐ Repairs ☐ Stained Soil ☐ Petroleum Odors ☐ Analytical Data ☐ Free Product and/or Oil Sheen in Groundwater	☐ Tank Removal ☐ Inventory Records ☐ Repairs ☐ Stained Soil ☐ Petroleum Odors ☐ Analytical Data ☐ Free Product and/or Oil Sheen in Groundwater	☐ Tank Removal ☐ Inventory Records ☐ Repairs ☐ Stained Soil ☐ Petroleum Odors ☐ Analytical Data ☐ Free Product and/or Oil Sheen in Groundwater

COMMENTS (attach additional sheets if necessary):

Tank removed years ago, suspect gasoline ? 1 tank
no knowledge of size, installation, piping

DISTRIBUTION: WHMD, FACILITY FILE, DISTRICT OFFICE, OWNER

[1] Copy this page for additional tanks if needed.

EQP 3826 (REV 11/05)

SENDER: COMPLETE THIS SECTION

- Complete items 1, 2, and 3. Also complete Item 4 if Restricted Delivery is desired.
- Print your name and address on the reverse so that we can return the card to you.
- Attach this card to the back of the mailpiece, or on the front if space permits.

1. Article Addressed to:

GOODWILL IND. OF S.W. MICHIGAN
2700 N. PITCHER STREET
KALAMAZOO, MI 49004-3490

COMPLETE THIS SECTION ON DELIVERY

A. Signature: X [signature] ☒ Agent ☐ Addressee

B. Received by (Printed Name): G. Dunn C. Date of Delivery

D. Is delivery address different from item 1? ☐ Yes
If YES, enter delivery address below: ☐ No

Service Type
☒ Certified Mail ☐ Express Mail
☐ Registered ☐ Return Receipt for Merchandise
☐ Insured Mail ☐ C.O.D.

4. Restricted Delivery? (Extra Fee) ☐ Yes

2. Article Number (Transfer from service label) 7002 2030 0006 6631 4833

PS Form 3811, February 2004 Domestic Return Receipt 102595-02-M-1540

7002 2030 0006 6631 4833

U.S. Postal Service™
CERTIFIED MAIL™ RECEIPT
(Domestic Mail Only; No Insurance Coverage Provided)

For delivery information visit our website at www.usps.com®

OFFICIAL USE

Postage	$
Certified Fee	
Return Receipt Fee (Endorsement Required)	
Restricted Delivery Fee (Endorsement Required)	
Total Postage & Fees	$

Postmark Here

Sent To
Street, Apt. No.; or PO Box No.
City, State, ZIP+4

PS Form 3800, June 2002 See Reverse for Instructions

UNITED STATES POSTAL SERVICE

First-Class Mail
Postage & Fees Paid
USPS
Permit No. G-10

• Sender: Please print your name, address, and ZIP+4 in this box •

JAMES C LUCAS
MDEQ-WHMD
STORAGE TANK SOLID WASTE
PO BOX 30241
LANSING, MI 48909-7741

Waste & Hazardous
Materials Division

AUG 22 2007

Certified Mail Provides:

- A mailing receipt
- A unique identifier for your mailpiece
- A record of delivery kept by the Postal Service for two years

Important Reminders:

- Certified Mail may ONLY be combined with First-Class Mail® or Priority Mail®.
- Certified Mail is *not* available for any class of international mail.
- NO INSURANCE COVERAGE IS PROVIDED with Certified Mail. For valuables, please consider Insured or Registered Mail.
- For an additional fee, a *Return Receipt* may be requested to provide proof of delivery. To obtain Return Receipt service, please complete and attach a Return Receipt (PS Form 3811) to the article and add applicable postage to cover the fee. Endorse mailpiece "Return Receipt Requested". To receive a fee waiver for a duplicate return receipt, a USPS® postmark on your Certified Mail receipt is required.
- For an additional fee, delivery may be restricted to the addressee or addressee's authorized agent. Advise the clerk or mark the mailpiece with the endorsement *"Restricted Delivery"*.
- If a postmark on the Certified Mail receipt is desired, please present the article at the post office for postmarking. If a postmark on the Certified Mail receipt is not needed, detach and affix label with postage and mail.

IMPORTANT: Save this receipt and present it when making an inquiry. Internet access to delivery information is not available on mail addressed to APOs and FPOs.

PS Form 3800, June 2002 (Reverse)
102595-02-M-1892

TRANSACTION REPORT

THU.JAN.08.2009 02:03 PM

FAX(TX)

#	DATE	START T.	RECEIVER	COM.TIME	PAGE	TYPE/NOTE	FILE
001	JAN.08	02:03PM	12693735333	0:00:17	1	OK SG3	4414

Kalamazoo County Health & Community Services

Kalamazoo County Government

Request for Environmental Public Records

Environmental Health Bureau

1. Requestor Information:

Erik D. Peterson — 269-342-1100

Name (Please print) — *Phone*

2. Please state the address and township of the public record(s) you are requesting: (add additional pages if necessary)

Goodwill Industries, 2700 N. Pitcher St., Kalamazoo Twp.

DISCLAIMER: Multiple requests received on the same day from the same individual or organization will be treated as a single request.

3. Type of record(s) you are requesting:

☒ Water Well Logs ☒ Water Quality Reports ☒ Septic System Drawings/Permits ☐ Pump Card

☒ Other, specify: Any information pertaining to environmental condition of the property

4. Do you wish to: ☐ **Examine the record here?**

☒ **Receive a copy via mail, fax** (less than 20 pages), or **e-mail** (if available)?

☐ **Mail:** _____ ☒ **Fax:** 269-342-4945

Fax number

_____ ☐ **E-mail:** _____

Mailing address — *E-mail address*

Erik D. Peterson — 1/8/09

Signature — *Date*

Please note: If there is a charge associated with any record search, you will be contacted to arrange for payment. Release of the records will be withheld until payment is received.

Fax this request to: (269) 373-5333

Office Use Staff processing request _____ Date _____

As part of the FOIA review, the following files were searched:

Record Found?	*Yes*	*No*		*Yes*	*No*
Facility Files	____	____	Water Quality Database	____	____
Wellogic	____	____	Archives	____	____
Contaminant Database	____	____	Other_____	____	____

Copies of the following items were returned to the requestor:

☐ Water Well Logs ☐ Water Quality Reports ☐ Septic System Drawings/Permits ☐ Pump Card

☐ Other, specify: _____

Notified: _____ (*Date*) Copies mailed: _____ (*Date*) Copies picked-up: _____ (*Date*) Copies faxed: _____ (*Date*)

Fee Assessment:

Single-sided: _____ copies at _____ cents/each = $ _____

Double-sided: _____ copies at _____ cents/each = $ _____

Research Time: _____ minutes

Specify material (If not paper copies): _____

COPY TOTAL	$
RESEARCH	$
MAILING	$
MATERIAL	$

Fee collected Date Initials

Kalamazoo County
Health & Community Services

Environmental Health and Laboratory Services Bureau
3299 Gull Road
Kalamazoo, MI 49048
Telephone: (269) 373-5210
Fax: (269) 373-5333

Freedom of Information Act Response Sheet

Total number of pages (including this cover sheet): 4

Date: *1/12/2009*

To: *Eric Peterson*

Company: Envirologic Fax Number: *269-342-4945*

From: Nancy Brzozowski 373-5343

Property Address(es): 2700 North Pitcher

The following information is attached/enclosed:

☐ Water Well Logs ☐ Septic System Drawings/Permits ☐ Water Quality Reports

OR

☐ No information could be found for the property or properties requested. Information may be available at the Michigan Department of Environmental Quality, Phone: (269) 567-3500

OR

☐ The information exceeds 20 pages. You may visit our office during regular business hours to review the files, or expect a minimum of a 5 day delay before copies will be available. These copies will be mailed to you only upon request in writing, and no further action will be taken until we are contacted in writing.

The above address is a known site of contamination, however, we have no information on file regarding this site. You may be able to obtain additional information from the Michigan Department of Environmental Quality.

STATE OF MICHIGAN
DEPARTMENT OF ENVIRONMENTAL QUALITY
LANSING

JENNIFER M. GRANHOLM
GOVERNOR

STEVEN E. CHESTER
DIRECTOR

RECEIVED JAN 16 2009

January 14, 2009

Mr. Erik D. Peterson
Envirologic Technologies, Inc.
2960 Interstate Parkway
Kalamazoo, Michigan 49048

Dear Mr. Patterson:

SUBJECT: Request for Disclosure of Official Files from the Land and Water Management Division

This written notice is issued in response to your January 8, 2009, request for information under the Freedom of Information Act (FOIA), MCL 15.231 *et seq.*, which was received by this office on January 12, 2009.

The purpose of the FOIA is to provide the public with access to existing, nonexempt public records of public bodies. Your request to examine or receive a copy of the following documents is denied.

Description of documents being denied: Any information pertaining to Goodwill Industries, 2700 North Pitcher Street, Kalamazoo, Michigan.

Reason for denial: To the best of this public body's knowledge, information, and belief, the public record does not exist under the name given by the requester, or by another name reasonably known to the public body.

Authority for denial: Public Act No. 442 of 1976, as amended, Section 3(1). Under section 10 of the FOIA, you may do either of the following:

1) Appeal this decision in writing to the Director of the Michigan Department of Environmental Quality at P.O. Box 30473, Lansing, Michigan 48909-7917. The writing must specifically state the word "appeal," and must identify the reason or reasons you believe the denial should be reversed. The head of the department, or his designee, must respond to your appeal within 10 business days after its receipt. Under unusual circumstances, the time for response to your appeal may be extended by 10 business days.

2) File an action in circuit court within 180 days after the date of the final determination to deny the request. If you prevail in such an action, the court is to award reasonable attorney fees, costs, and disbursements. Further, if the court finds the denial to be arbitrary and capricious, you may receive punitive damages in the amount of $500.00.

Sincerely,

Pam Studebaker

Pam Studebaker, FOIA Liaison
Land and Water Management Division
517-241-1554

EQP1048a (10/2006)

RECEIVED JAN 27 2009

STATE OF MICHIGAN
DEPARTMENT OF ENVIRONMENTAL QUALITY
LANSING

JENNIFER M. GRANHOLM
GOVERNOR

STEVEN E. CHESTER
DIRECTOR

January 22, 2009

Mr. Erik D. Peterson
Envirologic Technologies, Inc.
2960 Interstate Parkway
Kalamazoo, MI 49048

Dear Mr. Peterson:

SUBJECT: Request for Disclosure of Official Files from Water Bureau

This written notice is issued in response to your January 8, 2009, request for information under the Freedom of Information Act (FOIA), MCL 15.231 *et seq.*, which was received by this office on January 12, 2009.

The purpose of the FOIA is to provide the public with access to existing, nonexempt public records of public bodies. Your request dated January 8, 2009, to examine or receive a copy of the following documents is denied.

Description of documents being denied: Goodwill Industries, 2700 N. Pitcher St., Kalamazoo, MI

Reason for denial: To the best of this public body's knowledge, information, and belief, the public record does not exist under the name given by the requester, or by another name reasonably known to the public body.

Authority for denial: Public Act No. 442 of 1976, as amended, Section 3(1). Under section 10 of the FOIA, you may do either of the following:

1) Appeal this decision in writing to the Director of the Michigan Department of Environmental Quality at P.O. Box 30473, Lansing, Michigan 48909-7917. The writing must specifically state the word "appeal," and must identify the reason or reasons you believe the denial should be reversed. The head of the department, or his designee, must respond to your appeal within 10 business days after its receipt. Under unusual circumstances, the time for response to your appeal may be extended by 10 business days.

2) File an action in circuit court within 180 days after the date of the final determination to deny the request. If you prevail in such an action, the court is to award reasonable attorney fees, costs, and disbursements. Further, if the court finds the denial to be arbitrary and capricious, you may receive punitive damages in the amount of $500.00.

Sincerely,

Thomas J. Hettinger
FOIA Liaison
Water Bureau
517-241-1330

RECEIVED JAN 28 2009

STATE OF MICHIGAN
DEPARTMENT OF ENVIRONMENTAL QUALITY
LANSING

JENNIFER M. GRANHOLM
GOVERNOR

STEVEN E. CHESTER
DIRECTOR

January 22, 2009

Erik D. Peterson, Project Manager
Envirologic Technologies, Inc.
2960 Interstate Parkway
Kalamazoo MI 49048

Dear Mr. Peterson:

SUBJECT: Request for Disclosure of Official Files from the Air Quality Division

This written notice is issued in response to your January 8, 2009, request for information under the Freedom of Information Act (FOIA), MCL 15.231 *et seq.*, which was received by this office on January 8, 2009.

The purpose of the FOIA is to provide the public with access to existing, nonexempt public records of public bodies. Your request dated January 8, 2009, to examine or receive a copy of the following documents is denied.

Description of documents being denied: Goodwill Industries, 2700 N. Pitcher Street, Kalamazoo, MI

Reason for denial: To the best of this public body's knowledge, information, and belief, the public record does not exist under the name given by the requester, or by another name reasonably known to the public body.

Authority for denial: Public Act No. 442 of 1976, as amended, Section 3(1). Under section 10 of the FOIA, you may do either of the following:

1) Appeal this decision in writing to the Director of the Michigan Department of Environmental Quality at P.O. Box 30473, Lansing, Michigan 48909-7917. The writing must specifically state the word "appeal," and must identify the reason or reasons you believe the denial should be reversed. The head of the department, or his designee, must respond to your appeal within 10 business days after its receipt. Under unusual circumstances, the time for response to your appeal may be extended by 10 business days.

2) File an action in circuit court within 180 days after the date of the final determination to deny the request. If you prevail in such an action, the court is to award reasonable attorney fees, costs, and disbursements. Further, if the court finds the denial to be arbitrary and capricious, you may receive punitive damages in the amount of $500.00.

Sincerely,

Kristine Kelso
FOIA Liaison
Air Quality Division
517-241-7622

cc: 525-E-09

GOODWILL INDUSTRIES
2700 N PITCHER STREET
KALAMAZOO MI 49004
FACILITY ID #00003454
KALAMAZOO COUNTY

2008
GW SAMPLING REPORTS

07/15/08	11/05/08		
1ST 1/4	2ND 1/4	3RD 1/4	4TH 1/4

5✓

DEQ

MICHIGAN DEPARTMENT OF ENVIRONMENTAL QUALITY – REMEDIATION & REDEVELOPMENT DIVISION
PO BOX 30426, LANSING, MI 48909-7926, Phone 517-373-9837, Fax 517-373-2637, E-mail DEQ-STD-TANKS@michigan.gov

LEAKING UNDERGROUND STORAGE TANK SUPPLEMENTAL REPORT COVER SHEET

INSTRUCTIONS: Complete this form with all applicable information. Attach this form to all supplemental Leaking Underground Storage Tank (LUST) submittals; this includes all reports other than the Initial Assessment, Final Assessment, and Closure Reports. The Certified Underground Storage Tank Professional (CP) MUST sign below. Please return this completed report cover sheet to the appropriate RRD District Office. See form EQP4410 for a complete list of RRD district offices. Use of this form to provide the listed information is voluntary.

IDENTIFY TYPE OF SUPPLEMENTAL REPORT: Quarterly Groundwater Sampling

FACILITY NAME: Goodwill Industries of Southwest Michigan | FACILITY ID NUMBER: 0-003454

STREET ADDRESS: 2700 N. Pitcher Kalamazoo

STATE: Michigan ZIP CODE: 49004 COUNTY: Kalamazoo

DATE(S) RELEASE(S) DISCOVERED: 7/19/07 | CONFIRMED RELEASE NUMBER(S): C-0148-07

O/O NAME: Goodwill Industries of Southwest Michigan

O/O STREET ADDRESS: 420 E. Alcott Street, Kalamazoo STATE: MI ZIP CODE: 49001

CONTACT PERSON: John Dillworth | PHONE NUMBER: 269-382-0490

ANSWER ALL QUESTIONS

1. Type(s) of product released: gasoline

2. Free product present:
a. Currently? ☐YES ☒NO — If YES, total gallons recovered since last report:
b. Previously? ☐YES ☒NO — If YES, total gallons recovered to date:

3. Have vapors been identified in any confined spaces (basement, sewers)? ☐YES ☒NO

4. Estimated depth to groundwater: 5 feet | Estimated groundwater flow direction: SE

5. Estimated distance and direction from point of release to nearest:
a. Private well: 2,500 feet W of site b. Municipal well: ~5,000 feet SE c. Surface water/wetland: Drain is 260 feet SE

6. Since last report: a. cubic yards of soil remediated: NA b. gallons of groundwater remediated: NA

7. Totals to date: a. cubic yards of soil remediated: NA b. gallons of groundwater remediated: NA

8. Michigan RBCA Site Classification (1-4): 3

9. Has contamination migrated off-site above Tier 1 Residential RBSLs ☐YES ☒NO
If YES, have off-site impacted parties been notified (per Section 21309a(3) of Part 213 ☐YES ☐NO

10. MTBE | Has MTBE been detected in any groundwater sample? ☐YES ☒NO | Maximum MTBE concentration found in groundwater _____ ppb.

CERTIFICATION OF REPORT COMPLETION

I, the undersigned CP, hereby attest to the best of my knowledge and belief that the statements in this document and all attachments are true, accurate, and complete. I certify that the report was submitted to the Remediation & Redevelopment Division (RRD)

on July 15 2008 (Date submitted)

Ralph L. Freed 7/15/2008
CP Original Signature - Date

Brian L. Rice, P.E.
PRINT QC PROJECT MANAGER'S NAME

Ralph L. Freed, CPG
PRINT CP's Name

Fleis & VandenBrink Engineering, Inc.
NAME OF CONSULTING FIRM

CP ID 634

QC ID: Z_00331

ADDRESS 1601 Portage St., Kalamazoo, MI PHONE: 269-385-0011 FAX: 269-382-6972

RECEIVED
JUL 16 2008
MDEQ-KAL-RRD

FLEIS & VANDENBRINK ENGINEERING, INC.

Troll 9000
06/18/08

Low-Flow System
ISI Low-Flow Log

Project Information:		**Pump Information:**	
Operator Name	GAW	Pump Model/Type	Proactive
Company Name	F&V	Tubing Type	pvc
Project Name	GOODWILL	Tubing Diameter	0.15 [cm]
Site Name	45244B	Tubing Length	42.65 [m]
		Pump placement from TOC	16.4 [m]

Well Information:		**Pumping information:**	
Well Id	**MW-3**	Final pumping rate	295 [mL/min]
Well diameter	0.79 [cm]	Flowcell volume	406.92 [mL]
Well total depth	24.61 [m]	Calculated Sample Rate	83 [sec]
Depth to top of screen	8.2 [m]	Sample rate	83 [sec]
Screen length	23.62 [cm]	Stabilized drawdown	0.18 [cm]
Depth to Water	14.76 [m]		

Low-Flow Sampling Stabilization Summary

	Time	Temp [F]	pH [pH]	Cond [uS/cm]	Turb [NTU]	DO [mg/L]	ORP [mV]
Stabilization Settings			+/-0.2	+/-0.3 +/-3 %	+/-1 +/-10 %	+/-0.2 +/-10 %	+/-20
Last 5 Readings	14:21:44	61.25	7.29	452.91	5.50	226.18	-55.91
	14:23:08	61.24	7.29	452.78	7.70	214.00	-55.57
	14:24:32	61.19	7.29	452.72	6.06	202.05	-55.35
	14:25:57	61.18	7.29	453.43	5.96	190.63	-55.09
	14:27:20	61.18	7.29	452.89	6.59	179.89	-54.88
Variance in last 3 readings	14:24:32	-0.05	0.00	-0.06	-1.64	-11.95	0.22
	14:25:57	-0.01	0.00	0.71	-0.10	-11.42	0.26
	14:27:20	0.00	0.00	-0.54	0.62	-10.73	0.21

Notes: Volume Purged 8 gal

FLEIS & VANDENBRINK ENGINEERING, INC.

Troll 9000
06/18/08

Low-Flow System
ISI Low-Flow Log

Project Information:

Operator Name	GAW
Company Name	F&V
Project Name	GOODWILL
Site Name	45244B

Pump Information:

Pump Model/Type	Proactive
Tubing Type	pvc
Tubing Diameter	0.15 [cm]
Tubing Length	42.65 [m]
Pump placement from TOC	16.4 [m]

Well Information:

Well Id	**MW-4**
Well diameter	0.79 [cm]
Well total depth	26.12 [m]
Depth to top of screen	8.53 [m]
Screen length	23.62 [cm]
Depth to Water	15.75 [m]

Pumping information:

Final pumping rate	295 [mL/min]
Flowcell volume	406.92 [mL]
Calculated Sample Rate	83 [sec]
Sample rate	83 [sec]
Stabilized drawdown	0.18 [cm]

Low-Flow Sampling Stabilization Summary

	Time	Temp [F]	pH [pH]	Cond [uS/cm]	Turb [NTU]	DO [mg/L]	ORP [mV]
Stabilization Settings			+/-0.2	+/-0.3 +/-3 %	+/-1 +/-10 %	+/-0.2 +/-10 %	+/-20
Last 5 Readings	0:00:00	0.00	0.00	0.00	0.00	0.00	0.00
	14:44:47	60.38	7.05	576.24	4.65	3.66	-121.72
	14:46:11	60.43	7.05	578.18	3.29	0.23	-129.34
	14:47:36	60.43	7.06	580.13	3.58	-1.38	-135.11
	14:49:00	60.44	7.06	581.10	2.68	-1.94	-138.57
Variance in last 3 readings	14:46:11	0.05	0.00	1.94	-1.36	-3.44	-7.61
	14:47:36	0.00	0.00	1.95	0.29	-1.61	-5.77
	14:49:00	0.01	0.00	0.98	-0.90	-0.56	-3.46

Notes: Volume Purged 8 gal

KAR *Laboratories, Inc.*

4425 Manchester Road
Kalamazoo, MI 49001
Phone 269 381-9666
Fax 269 381-9698
www.karlabs.com

Fleis & VandenBrink Engineering Inc
1601 Portage Street
Kalamazoo, MI 49001

Attn : ***Mr. Ralph Freed***

KAR Project No. :	***082422***
Date Reported :	***07/02/08***
Date Activated :	***06/19/08***
Date Due :	***07/03/08***
Date Validated :	***07/02/08***

Project Description : ***Analysis of four samples from Goodwill 2700 N Pitcher Street (45244B)***

Dear Client,

Your laboratory data is presented to you in this report. Unless otherwise stated under the "Comments" heading, all tests were performed within the maximum allowable holding times, have met or exceeded QC requirements and the result represents the sample as it was received.

If you wish to contact us about this work please mention KAR Project No. 082422. To arrange additional sampling or testing please contact our Client Services Department. If you have any questions regarding quality assurance please call us.

Thank you for the opportunity to serve you. Please do not hesitate to call if we can provide additional assistance.

Respectfully submitted,

David R. Alkema
Laboratory Manager

KAR Laboratories, Inc. maintains Full Certification status for Bacteriology, Inorganics, Regulated Organics and Synthetic Organics through USEPA, Michigan Department of Public Health and Indiana State Department of Health.

POSITIVE RESULTS SUMMARY REPORT

Client: *Fleis & VandenBrink Engineering Inc*

KAR Project No.: *082422*

Date Reported: *07/02/08*

Project Description: *Analysis of four samples from Goodwill 2700 N Pitcher Street (45244B)*

Sample Description: *MW-2*

Test	Positive Result Concentration	Units
1,2,4-Trimethylbenzene	2.5	ug/L
1,3,5-Trimethylbenzene	6.4	ug/L
Benzene	1.3	ug/L
Ethylbenzene	22	ug/L
M-and/or p-xylene	32	ug/L
Naphthalene	6.1	ug/L

This Positive Results Summary Report provides an overview of the sample set and CONTAINS ONLY RESULTS ABOVE THE REPORTING LIMIT. It should not be used as a substitute for the attached detail report.

LABORATORY DETAIL REPORT

Client: *Fleis & VandenBrink Engineering Inc*

KAR Project No. : *082422*
Date Reported : *07/02/08*

Project Desc. : *Analysis of four samples from Goodwill 2700 N Pitcher Street (45244B)*

Sample ID : *MW-1*
Sampled By :
Sample Date : *06/18/08*
Sample Time : *1430*

Date Received : *06/19/08*
Sample Type : *aqueous*
KAR Sample No. : *082422-01*

Test	Result	Units of Measure	Method	Analyzed	Analyst	Comments
Prep, metals	Completed		EPA 30xx,200.x	06/23/08	DBL	
Lead, total	<0.003	mg/L	EPA 200.8	07/01/08	PML	Detection limit = 0.003
MDNR Scan 2	See below		EPA 8260	06/26/08	JAR	
Prep, VOA	Completed		EPA 5030	06/26/08	JAR	
1,2,4-Trimethylbenzene	<1	ug/L	EPA 8260	06/26/08	JAR	Detection limit = 1
1,2-Dibromoethane	<1	ug/L	EPA 8260	06/26/08	JAR	Detection limit = 1
1,2-Dichloroethane	<1	ug/L	EPA 8260	06/26/08	JAR	Detection limit = 1
1,3,5-Trimethylbenzene	<1	ug/L	EPA 8260	06/26/08	JAR	Detection limit = 1
2-Methylnaphthalene by 8260	<5	ug/L	EPA 8260	06/26/08	JAR	Detection limit = 5
Benzene	<1	ug/L	EPA 8260	06/26/08	JAR	Detection limit = 1
Ethylbenzene	<1	ug/L	EPA 8260	06/26/08	JAR	Detection limit = 1
M-and/or p-xylene	<2	ug/L	EPA 8260	06/26/08	JAR	Detection limit = 2
Naphthalene	<5	ug/L	EPA 8260	06/26/08	JAR	Detection limit = 5
O-Xylene	<1	ug/L	EPA 8260	06/26/08	JAR	Detection limit = 1
Toluene	<1	ug/L	EPA 8260	06/26/08	JAR	Detection limit = 1

LABORATORY DETAIL REPORT

Client: *Fleis & VandenBrink Engineering Inc*

KAR Project No. : *082422*

Date Reported : *07/02/08*

Project Desc. : *Analysis of four samples from Goodwill 2700 N Pitcher Street (45244B)*

Sample ID : *MW-2*

Sampled By :

Sample Date : *06/18/08*

Sample Time : *1415*

Date Received : *06/19/08*

Sample Type : *aqueous*

KAR Sample No. : *082422-02*

Test	Result	Units of Measure	Method	Analyzed	Analyst	Comments
Prep, metals	Completed		EPA 30xx,200.x	06/23/08	DBL	
Lead, total	<0.003	mg/L	EPA 200.8	07/01/08	PML	Detection limit = 0.003
MDNR Scan 2	See below		EPA 8260	06/26/08	JAR	
Prep, VOA	Completed		EPA 5030	06/26/08	JAR	
1,2,4-Trimethylbenzene	2.5	ug/L	EPA 8260	06/26/08	JAR	Detection limit = 1
1,2-Dibromoethane	<1	ug/L	EPA 8260	06/26/08	JAR	Detection limit = 1
1,2-Dichloroethane	<1	ug/L	EPA 8260	06/26/08	JAR	Detection limit = 1
1,3,5-Trimethylbenzene	6.4	ug/L	EPA 8260	06/26/08	JAR	Detection limit = 1
2-Methylnaphthalene by 8260	<5	ug/L	EPA 8260	06/26/08	JAR	Detection limit = 5
Benzene	1.3	ug/L	EPA 8260	06/26/08	JAR	Detection limit = 1
Ethylbenzene	22	ug/L	EPA 8260	06/26/08	JAR	Detection limit = 1
M-and/or p-xylene	32	ug/L	EPA 8260	06/26/08	JAR	Detection limit = 2
Naphthalene	6.1	ug/L	EPA 8260	06/26/08	JAR	Detection limit = 5
O-Xylene	<1	ug/L	EPA 8260	06/26/08	JAR	Detection limit = 1
Toluene	<1	ug/L	EPA 8260	06/26/08	JAR	Detection limit = 1

LABORATORY DETAIL REPORT

Client: *Fleis & VandenBrink Engineering Inc*

KAR Project No. : *082422*

Date Reported : *07/02/08*

Project Desc. : *Analysis of four samples from Goodwill 2700 N Pitcher Street (45244B)*

Sample ID : *MW-3*

Sampled By :

Sample Date : *06/18/08*

Sample Time : *1300*

Date Received : *06/19/08*

Sample Type : *aqueous*

KAR Sample No. : *082422-03*

Test	Result	Units of Measure	Method	Analyzed	Analyst	Comments
Prep, metals	Completed		EPA 30xx,200.x	06/23/08	DBL	
Lead, total	<0.003	mg/L	EPA 200.8	07/01/08	PML	Detection limit = 0.003
MDNR Scan 2	See below		EPA 8260	06/26/08	JAR	
Prep, VOA	Completed		EPA 5030	06/26/08	JAR	
1,2,4-Trimethylbenzene	<1	ug/L	EPA 8260	06/26/08	JAR	Detection limit = 1
1,2-Dibromoethane	<1	ug/L	EPA 8260	06/26/08	JAR	Detection limit = 1
1,2-Dichloroethane	<1	ug/L	EPA 8260	06/26/08	JAR	Detection limit = 1
1,3,5-Trimethylbenzene	<1	ug/L	EPA 8260	06/26/08	JAR	Detection limit = 1
2-Methylnaphthalene by 8260	<5	ug/L	EPA 8260	06/26/08	JAR	Detection limit = 5
Benzene	<1	ug/L	EPA 8260	06/26/08	JAR	Detection limit = 1
Ethylbenzene	<1	ug/L	EPA 8260	06/26/08	JAR	Detection limit = 1
M-and/or p-xylene	<2	ug/L	EPA 8260	06/26/08	JAR	Detection limit = 2
Naphthalene	<5	ug/L	EPA 8260	06/26/08	JAR	Detection limit = 5
O-Xylene	<1	ug/L	EPA 8260	06/26/08	JAR	Detection limit = 1
Toluene	<1	ug/L	EPA 8260	06/26/08	JAR	Detection limit = 1

LABORATORY DETAIL REPORT

Client: *Fleis & VandenBrink Engineering Inc*

KAR Project No. : *082422*
Date Reported : *07/02/08*

Project Desc. : *Analysis of four samples from Goodwill 2700 N Pitcher Street (45244B)*

Sample ID : *MW-4*
Sampled By :
Sample Date : *06/18/08*
Sample Time : *1215*

Date Received : *06/19/08*
Sample Type : *aqueous*
KAR Sample No. : *082422-04*

Test	Result	Units of Measure	Method	Analyzed	Analyst	Comments
Prep, metals	Completed		EPA 30xx,200.x	06/23/08	DBL	
Lead, total	<0.003	mg/L	EPA 200.8	07/01/08	PML	Detection limit = 0.003
MDNR Scan 2	See below		EPA 8260	06/26/08	JAR	
Prep, VOA	Completed		EPA 5030	06/26/08	JAR	
1,2,4-Trimethylbenzene	<1	ug/L	EPA 8260	06/26/08	JAR	Detection limit = 1
1,2-Dibromoethane	<1	ug/L	EPA 8260	06/26/08	JAR	Detection limit = 1
1,2-Dichloroethane	<1	ug/L	EPA 8260	06/26/08	JAR	Detection limit = 1
1,3,5-Trimethylbenzene	<1	ug/L	EPA 8260	06/26/08	JAR	Detection limit = 1
2-Methylnaphthalene by 8260	<5	ug/L	EPA 8260	06/26/08	JAR	Detection limit = 5
Benzene	<1	ug/L	EPA 8260	06/26/08	JAR	Detection limit = 1
Ethylbenzene	<1	ug/L	EPA 8260	06/26/08	JAR	Detection limit = 1
M-and/or p-xylene	<2	ug/L	EPA 8260	06/26/08	JAR	Detection limit = 2
Naphthalene	<5	ug/L	EPA 8260	06/26/08	JAR	Detection limit = 5
O-Xylene	<1	ug/L	EPA 8260	06/26/08	JAR	Detection limit = 1
Toluene	<1	ug/L	EPA 8260	06/26/08	JAR	Detection limit = 1

KAR Laboratories, Inc. (269-381-9666) www.karlabs.com

Client: F V Eng

Attn: Ralph Freed

Phone: ( ) Fax: ( )

Cell : ( ) Email:

Project Name: Goodwill Industries 2700 N. Pitcher St

Project # 45244B

P.O. #

Sampled by: ☐ KAR ☒ Client Initials ___

Turnaround Time:
☒ 10-business days ☐ Emergency (quote)
☐ 5-business days (x 1.5)
☐ 3-business days (x 2.0) ☐ Monthly

Samples rec'd
Cold: Y (N) Intact: (Y) N

Requested Analyses

KAR use only
Proj#: 082422
Login: NES
Date: 6/19/08
c-of-c (Y) N
labels (Y) N
LODs Y (N)
contain (Y) N
headspace Y (N)
amount (Y) N
hold time Y (N)
rush cost Y (N)

#	Sample Identification	Sample Info Date	Time	Matrix	Sample Containers Type	Size	#	Total Pb	BTEX, TMBs, EDB	Naphthalene, 1,2-DCA	2-Methylnaphthalene						Remarks
	MW-1	6/18/08	1430	Aq	Glass	40 ml	2		✓	✓	✓						
					Plastic	250	1	✓									
	MW-2	"	1415		Glass	40 ml	2		✓	✓	✓						
					Plastic	250 ml	1	✓									
	MW-3	"	1300		Glass	40 ml	2		✓	✓	✓						
					Plastic	250 ml	1	✓									
	MW-4	"	1215		Glass	40 ml	2		✓	✓	✓						
					Plastic	250 ml	1	✓									

Relinquished By: [signature] Received By: Hope Jenney Date/Time: 3:38 6/18/08 Notes:

Relinquished By: Received By: Date/Time:

Comparison of Laboratory Results to Part 201 Generic Cleanup Criteria and Screening Levels

Darker or blue shaded cells for the criteria indicate the chemical was found at a concentration that exceeds at least one criterion. Lighter or yellow shaded cells indicate the compound was not detected, but the reporting limit was above the criteria.

Site/Facility/Incident Analysis of four samples from Goodwill 2700 N Pitcher Street

Laboratory Results			Groundwater: Residential and Industrial-Commercial Part 201 Generic Cleanup Criteria and Screening Levels; Part 213 Tier Risk-Based Screening levels (RBSLs)									
			Residential and Commercial I Drinking Water Criteria And RBSLs	Industrial and Commercial II, III,IV Drinking Water Criteria and RSBLs	Groundwater Surface Water Interface Criteria And RBSLs (may not be protective for Drinking Water Sources) (1)	Groundwater Surface Water Interface Criteria And RBSLs (protective for Drinking Water Sources) (1)	Residential and Commercial I Groundwater Volatilization to Indoor Air Inhalation Criteria and RBSLs	Industrial and Commercial II III and IV Groundwater Volatilization to Indoor Air Inhalation Criteria and RBSLs	Groundwater Contact Criteria and RBSLs	Water Solubility	Flammability and Explosivity Screening Level	Acute Inhalation Screening Level
SAMPLE:	**MW-4-6/18/2008 12:15**											
Volatiles												
Parameter	**Result (ug/L)**	**Qual.**										
1,2-Dibromoethane	< 1		0.05 (A)	0.05 (A)	0.2 (X)	0.05 (M); 0.006	2,400	15,000	25	4.20E+6	ID	ID
Toluene	< 1		790 (E)	790 (E)	140		5.3E+5 (S)	5.3E+5 (S)	5.3E+5 (S)	5.26E+5	61,000	ID
1,2,4-Trimethylbenzene	< 1		63 (E)	63 (E)	17		56,000 (S)	56,000 (S)	56,000 (S)	55,890	56,000 (S)	ID
1,3,5-Trimethylbenzene	< 1		72 (E)	72 (E)	45		61,000 (S)	61,000 (S)	61,000 (S)	61,150	ID	ID
M-and/or p-xylene	< 2											
O-Xylene	< 1											
Xylenes (I)	< 2		280 (E)	280 (E)	35		1.9E+5 (S)	1.9E+5 (S)	1.9E+5 (S)	1.86E+5	70,000	1.9E+5 (S)

Total concentrations must be used when possible for comparisons to cleanup criteria and RBSLs. The use of dissolved constituents for comparison to criteria must be approved by the RRD.

Some criteria in the table may show two values with a footnote (M). This occurs when the calculated criterion for the respective land use and pathway is below the target detection limit or TDL (see OM#2, Attachment 1 and foonote M in OM#1, Attachment 1.). In such cases the criterion defaults to the TDL. The first value is the default criterion and the last value the calculated criterion.

More than one result may be reported by the laboratory for the same parameter. (different methods are used for the same parameter)

A ph of 7 and hardness of 100 were used to calculate GSI generic criteria for some parameters

Comparison of Laboratory Results to Part 201 Generic Cleanup Criteria and Screening Levels

Darker or blue shaded cells for the criteria indicate the chemical was found at a concentration that exceeds at least one criterion. Lighter or yellow shaded cells indicate the compound was not detected, but the reporting limit was above the criteria.

Site/Facility/Incident Analysis of four samples from Goodwill 2700 N Pitcher Street

Laboratory Results			Groundwater: Residential and Industrial-Commercial Part 201 Generic Cleanup Criteria and Screening Levels; Part 213 Tier Risk-Based Screening levels (RBSLs)									
			Residential and Commercial I Drinking Water Criteria And RBSLs	Industrial and Commercial II, III,IV Drinking Water Criteria and RSBLs	Groundwater Surface Water Interface Criteria And RBSLs (may not be protective for Drinking Water Sources) (1)	Groundwater Surface Water Interface Criteria And RBSLs (protective for Drinking Water Sources) (1)	Residential and Commercial I Groundwater Volatilization to Indoor Air Inhalation Criteria and RBSLs	Industrial and Commercial II III and IV Groundwater Volatilization to Indoor Air Inhalation Criteria and RBSLs	Groundwater Contact Criteria and RBSLs	Water Solubility	Flammability and Explosivity Screening Level	Acute Inhalation Screening Level
SAMPLE:	**MW-2-6/18/2008 14:15**											
Volatiles												
Parameter	Result (ug/L)	Qual.										
Xylenes (I)	< 1		280 (E)	280 (E)	35		1.9E+5 (S)	1.9E+5 (S)	1.9E+5 (S)	1.86E+5	70,000	1.9E+5 (S)
Xylenes (I)	32		280 (E)	280 (E)	35		1.9E+5 (S)	1.9E+5 (S)	1.9E+5 (S)	1.86E+5	70,000	1.9E+5 (S)
SAMPLE:	**MW-3-6/18/2008 13:00**											
Metals												
Parameter	Result (ug/L)	Qual.										
Lead, total	< 3		4.0 (L)	4.0 (L)	(G,X)	14 CALC	NLV	NLV	ID	NA	ID	ID
Semivolatiles												
Parameter	Result (ug/L)	Qual.										
Naphthalene	< 5		520	1,500	13		31,000 (S)	31,000 (S)	31,000 (S)	31,000	NA	31,000 (S)
Semivolatiles, PNAs												
Parameter	Result (ug/L)	Qual.										
2-Methylnaphthalene by 8260	< 5		260	750	ID		ID	ID	25,000 (S)	24,600	ID	ID
Volatiles												
Parameter	Result (ug/L)	Qual.										
Benzene	< 1		5.0 (A)	5.0 (A)	200 (X)	12	5,600	35,000	11,000	1.75E+6	68,000	67,000
1,2-Dichloroethane	< 1		5.0 (A)	5.0 (A)	360 (X)	6	9,600	59,000	19,000	8.52E+6	2.5E+6	ID
Ethylbenzene	< 1		74 (E)	74 (E)	18		1.1E+5	1.7E+5 (S)	1.7E+5 (S)	1.69E+5	43,000	1.7E+5 (S)
1,2-Dibromoethane	< 1		0.05 (A)	0.05 (A)	0.2 (X)	0.05 (M); 0.006	2,400	15,000	25	4.20E+6	ID	ID
Toluene	< 1		790 (E)	790 (E)	140		5.3E+5 (S)	5.3E+5 (S)	5.3E+5 (S)	5.26E+5	61,000	ID
1,2,4-Trimethylbenzene	< 1		63 (E)	63 (E)	17		56,000 (S)	56,000 (S)	56,000 (S)	55,890	56,000 (S)	ID
1,3,5-Trimethylbenzene	< 1		72 (E)	72 (E)	45		61,000 (S)	61,000 (S)	61,000 (S)	61,150	ID	ID
M-and/or p-xylene	< 2											
O-Xylene	< 1											
Xylenes (I)	< 2		280 (E)	280 (E)	35		1.9E+5 (S)	1.9E+5 (S)	1.9E+5 (S)	1.86E+5	70,000	1.9E+5 (S)
SAMPLE:	**MW-4-6/18/2008 12:15**											
Metals												
Parameter	Result (ug/L)	Qual.										
Lead, total	< 3		4.0 (L)	4.0 (L)	(G,X)	14 CALC	NLV	NLV	ID	NA	ID	ID
Semivolatiles												
Parameter	Result (ug/L)	Qual.										
Naphthalene	< 5		520	1,500	13		31,000 (S)	31,000 (S)	31,000 (S)	31,000	NA	31,000 (S)
Semivolatiles, PNAs												
Parameter	Result (ug/L)	Qual.										
2-Methylnaphthalene by 8260	< 5		260	750	ID		ID	ID	25,000 (S)	24,600	ID	ID
Volatiles												
Parameter	Result (ug/L)	Qual.										
Benzene	< 1		5.0 (A)	5.0 (A)	200 (X)	12	5,600	35,000	11,000	1.75E+6	68,000	67,000
1,2-Dichloroethane	< 1		5.0 (A)	5.0 (A)	360 (X)	6	9,600	59,000	19,000	8.52E+6	2.5E+6	ID
Ethylbenzene	< 1		74 (E)	74 (E)	18		1.1E+5	1.7E+5 (S)	1.7E+5 (S)	1.69E+5	43,000	1.7E+5 (S)

Comparison of Laboratory Results to Part 201 Generic Cleanup Criteria and Screening Levels

Darker or blue shaded cells for the criteria indicate the chemical was found at a concentration that exceeds at least one criterion. Lighter or yellow shaded cells indicate the compound was not detected, but the reporting limit was above the criteria.

Site/Facility/Incident Analysis of four samples from Goodwill 2700 N Pitcher Street

Laboratory Results			Groundwater: Residential and Industrial-Commercial Part 201 Generic Cleanup Criteria and Screening Levels; Part 213 Tier Risk-Based Screening levels (RBSLs)									
			Residential and Commercial I Drinking Water Criteria And RBSLs	Industrial and Commercial II, III,IV Drinking Water Criteria and RSBLs	Groundwater Surface Water Interface Criteria And RBSLs (may not be protective for Drinking Water Sources) (1)	Groundwater Surface Water Interface Criteria And RBSLs (protective for Drinking Water Sources) (1)	Residential and Commercial I Groundwater Volatilization to Indoor Air Inhalation Criteria and RBSLs	Industrial and Commercial II III and IV Groundwater Volatilization to Indoor Air Inhalation Criteria and RBSLs	Groundwater Contact Criteria and RBSLs	Water Solubility	Flammability and Explosivity Screening Level	Acute Inhalation Screening Level
SAMPLE:	**MW-1-6/18/2008 14:30**											
Metals												
Parameter	**Result (ug/L)**	**Qual.**										
Lead, total	< 3		4.0 (L)	4.0 (L)	(G,X)	14 CALC	NLV	NLV	ID	NA	ID	ID
Semivolatiles												
Parameter	**Result (ug/L)**	**Qual.**										
Naphthalene	< 5		520	1,500	13		31,000 (S)	31,000 (S)	31,000 (S)	31,000	NA	31,000 (S)
Semivolatiles, PNAs												
Parameter	**Result (ug/L)**	**Qual.**										
2-Methylnaphthalene by 8260	< 5		260	750	ID		ID	ID	25,000 (S)	24,600	ID	ID
Volatiles												
Parameter	**Result (ug/L)**	**Qual.**										
Benzene	< 1		5.0 (A)	5.0 (A)	200 (X)	12	5,600	35,000	11,000	1.75E+6	68,000	67,000
1,2-Dichloroethane	< 1		5.0 (A)	5.0 (A)	360 (X)	6	9,600	59,000	19,000	8.52E+6	2.5E+6	ID
Ethylbenzene	< 1		74 (E)	74 (E)	18		1.1E+5	1.7E+5 (S)	1.7E+5 (S)	1.69E+5	43,000	1.7E+5 (S)
1,2-Dibromoethane	< 1		0.05 (A)	0.05 (A)	0.2 (X)	0.05 (M); 0.006	2,400	15,000	25	4.20E+6	ID	ID
Toluene	< 1		790 (E)	790 (E)	140		5.3E+5 (S)	5.3E+5 (S)	5.3E+5 (S)	5.26E+5	61,000	ID
1,2,4-Trimethylbenzene	< 1		63 (E)	63 (E)	17		56,000 (S)	56,000 (S)	56,000 (S)	55,890	56,000 (S)	ID
1,3,5-Trimethylbenzene	< 1		72 (E)	72 (E)	45		61,000 (S)	61,000 (S)	61,000 (S)	61,150	ID	ID
M-and/or p-xylene	< 2											
O-Xylene	< 1											
Xylenes (I)	< 2		280 (E)	280 (E)	35		1.9E+5 (S)	1.9E+5 (S)	1.9E+5 (S)	1.86E+5	70,000	1.9E+5 (S)
SAMPLE:	**MW-2-6/18/2008 14:15**											
Metals												
Parameter	**Result (ug/L)**	**Qual.**										
Lead, total	< 3		4.0 (L)	4.0 (L)	(G,X)	14 CALC	NLV	NLV	ID	NA	ID	ID
Semivolatiles												
Parameter	**Result (ug/L)**	**Qual.**										
Naphthalene	6.1		520	1,500	13		31,000 (S)	31,000 (S)	31,000 (S)	31,000	NA	31,000 (S)
Semivolatiles, PNAs												
Parameter	**Result (ug/L)**	**Qual.**										
2-Methylnaphthalene by 8260	< 5		260	750	ID		ID	ID	25,000 (S)	24,600	ID	ID
Volatiles												
Parameter	**Result (ug/L)**	**Qual.**										
Benzene	1.3		5.0 (A)	5.0 (A)	200 (X)	12	5,600	35,000	11,000	1.75E+6	68,000	67,000
1,2-Dichloroethane	< 1		5.0 (A)	5.0 (A)	360 (X)	6	9,600	59,000	19,000	8.52E+6	2.5E+6	ID
Ethylbenzene	24		74 (E)	74 (E)	18		1.1E+5	1.7E+5 (S)	1.7E+5 (S)	1.69E+5	43,000	1.7E+5 (S)
1,2-Dibromoethane	< 1		0.05 (A)	0.05 (A)	0.2 (X)	0.05 (M); 0.006	2,400	15,000	25	4.20E+6	ID	ID
Toluene	< 1		790 (E)	790 (E)	140		5.3E+5 (S)	5.3E+5 (S)	5.3E+5 (S)	5.26E+5	61,000	ID
1,2,4-Trimethylbenzene	2.5		63 (E)	63 (E)	17		56,000 (S)	56,000 (S)	56,000 (S)	55,890	56,000 (S)	ID
1,3,5-Trimethylbenzene	6.4		72 (E)	72 (E)	45		61,000 (S)	61,000 (S)	61,000 (S)	61,150	ID	ID
M-and/or p-xylene	32											
O-Xylene	< 1											

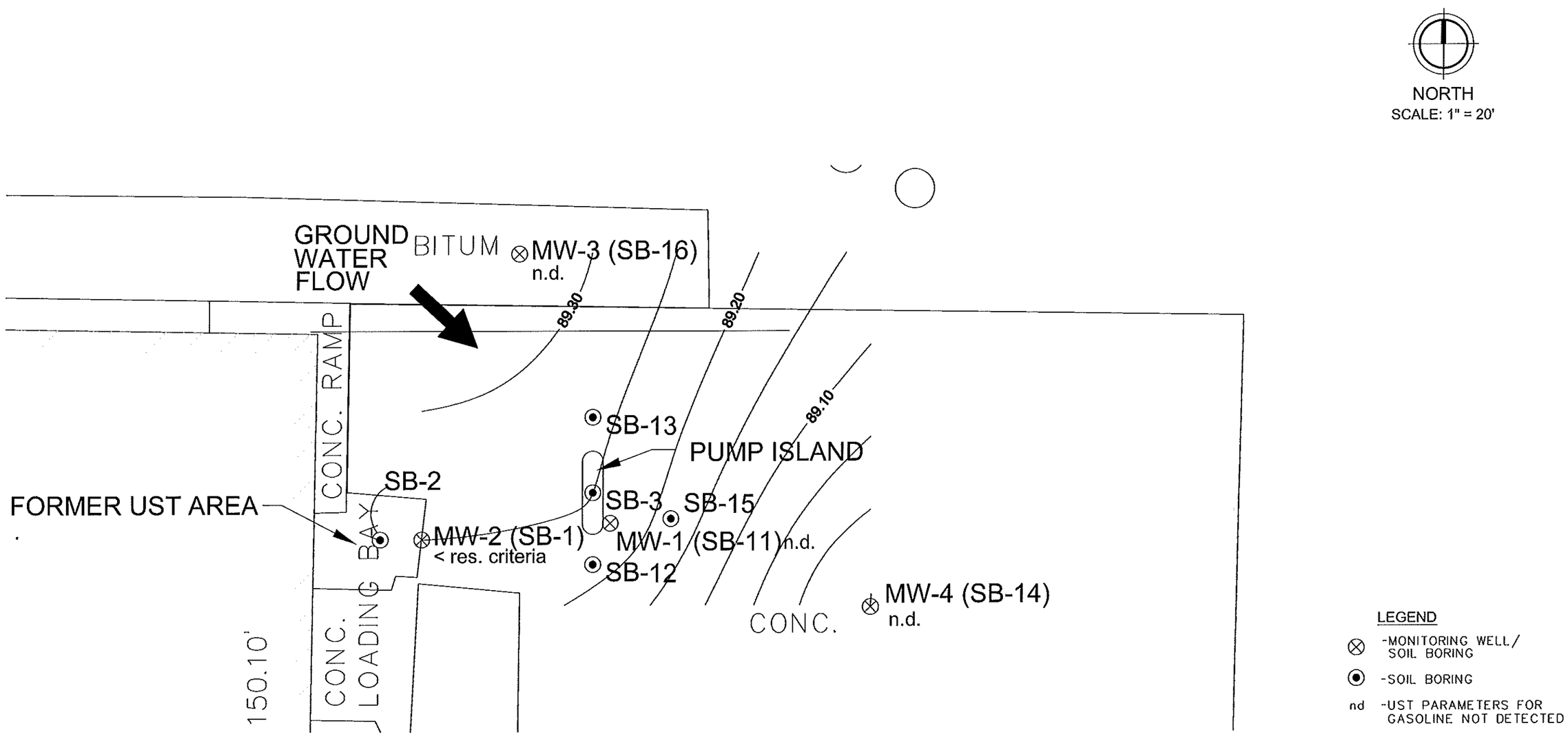

GOODWILL INDUSTRIES OF SW MICHIGAN
KALAMAZOO TOWNSHIP, KALAMAZOO COUNTY, MICHIGAN

UST SITE
GROUNDWATER - JUNE 2008

2008 45244A

FLEIS & VANDENBRINK ENGINEERING, INC.

DEQ

MICHIGAN DEPARTMENT OF ENVIRONMENTAL QUALITY – REMEDIATION & REDEVELOPMENT DIVISION
PO BOX 30426, LANSING, MI 48909-7926, Phone 517-373-9837, Fax 517-373-2637, E-mail DEQ-STD-TANKS@michigan.gov

LEAKING UNDERGROUND STORAGE TANK SUPPLEMENTAL REPORT COVER SHEET

INSTRUCTIONS: Complete this form with all applicable information. Attach this form to all supplemental Leaking Underground Storage Tank (LUST) submittals; this includes all reports other than the Initial Assessment, Final Assessment, and Closure Reports. The Certified Underground Storage Tank Professional (CP) MUST sign below. Please return this completed report cover sheet to the appropriate RRD District Office. See form EQP4410 for a complete list of RRD district offices. Use of this form to provide the listed information is voluntary.

IDENTIFY TYPE OF SUPPLEMENTAL REPORT: Quarterly Groundwater Sampling 2nd Quarter

FACILITY NAME: Goodwill Industries of Southwest Michigan | FACILITY ID NUMBER: 0-003454

STREET ADDRESS: 2700 N. Pitcher Kalamazoo

STATE: Michigan ZIP CODE: 49004 COUNTY: Kalamazoo

DATE(S) RELEASE(S) DISCOVERED: 7/19/07 | CONFIRMED RELEASE NUMBER(S): C-0148-07

O/O NAME: Goodwill Industries of Southwest Michigan

O/O STREET ADDRESS: 420 E. Alcott Street, Kalamazoo STATE: MI ZIP CODE: 49001

CONTACT PERSON: John Dillworth | PHONE NUMBER: 269-382-0490

ANSWER ALL QUESTIONS

1. Type(s) of product released: gasoline

2. Free product present:
a. Currently? ☐YES ☒NO
b. Previously? ☐YES ☒NO
If YES, total gallons recovered since last report:
If YES, total gallons recovered to date:

3. Have vapors been identified in any confined spaces (basement, sewers)? ☐YES ☒NO

4. Estimated depth to groundwater: 5 feet | Estimated groundwater flow direction: SE

5. Estimated distance and direction from point of release to nearest:
a. Private well: 2,500 feet W of site b. Municipal well: ~5,000 feet SE c. Surface water/wetland: Drain is 260 feet SE

6. Since last report: a. cubic yards of soil remediated: NA b. gallons of groundwater remediated: NA

7. Totals to date: a. cubic yards of soil remediated: NA b. gallons of groundwater remediated: NA

8. Michigan RBCA Site Classification (1-4): 3

9. Has contamination migrated off-site above Tier 1 Residential RBSLs ☐YES ☒NO
If YES, have off-site impacted parties been notified (per Section 21309a(3) of Part 213 ☐YES ☐NO

10. MTBE | Has MTBE been detected in any groundwater sample? ☐YES ☒NO | Maximum MTBE concentration found in groundwater _____ ppb.

CERTIFICATION OF REPORT COMPLETION

I, the undersigned CP, hereby attest to the best of my knowledge and belief that the statements in this document and all attachments are true, accurate, and complete. I certify that the report was submitted to the Remediation & Redevelopment Division (RRD)

on 11/5/08 (Date submitted)

Eric Walters 11/5/08
CP Original Signature - Date

Brian L. Rice, P.E.
PRINT QC PROJECT MANAGER'S NAME

Eric Walters, CPG
PRINT CP's Name

Fleis & VandenBrink Engineering, Inc.
NAME OF CONSULTING FIRM

CP ID 1115 QC ID: Z 00331

ADDRESS 1601 Portage St., Kalamazoo, MI PHONE: 269-385-0011 FAX: 269-382-6972

RECEIVED
NOV - 6 2008
MDEQ-KAL-RRD

FLEIS & VANDENBRINK
ENGINEERING, INC.
Offices in Michigan and Indiana
1601 Portage Street, Kalamazoo, MI 49001
Office (269) 385-0011 Fax (269) 382-6972

November 5, 2008

Mr. David O'Donnell
Department of Environmental Quality
Kalamazoo District Office
7953 Adobe Road
Kalamazoo, MI 49009-5026

RE: **Groundwater Sampling – 2nd Quarter Sampling Report**
2700 North Pitcher Street
Facility ID 003454

Dear Mr. O'Donnell:

In accordance with Part 213 we have collected groundwater data from all four (4) wells from the above referenced facility on October 3, 2008. Samples were collected using low-flow techniques and analyzed by KAR Labs of Kalamazoo, Michigan for the following parameters: BTEX, TMBs, DCA, EDB (low level), Naphthalene, 2-Methylnaphthalene and Total Lead. No concentrations of the analyzed parameters were detected above the MDEQ Part 201 Generic Cleanup Criteria. Ethylbenzene was detected in MW-1 at 2 ug/L (ppb).

The attached groundwater flow map indicates a southeasterly groundwater flow direction. The next quarterly sampling event is scheduled for January of 2009.

If you have any concerns or questions, please contact us at 269-385-0011.

Sincerely,

FLEIS & VANDENBRINK ENGINEERING, INC.

Eric Walters, CPG
Project Manager

Brian L. Rice, P.E.
Environmental Group Manager

cc: John Dillworth, Goodwill Industries

Enclosures: Figure 1 – Potentiometric Surface Map
Table 1 – Static Water Elevations
Table 2 – Groundwater Analytical Summary
Low Flow Data Logs
Analytical Data

45244B Letter to DEQ-2nd Qtr.doc

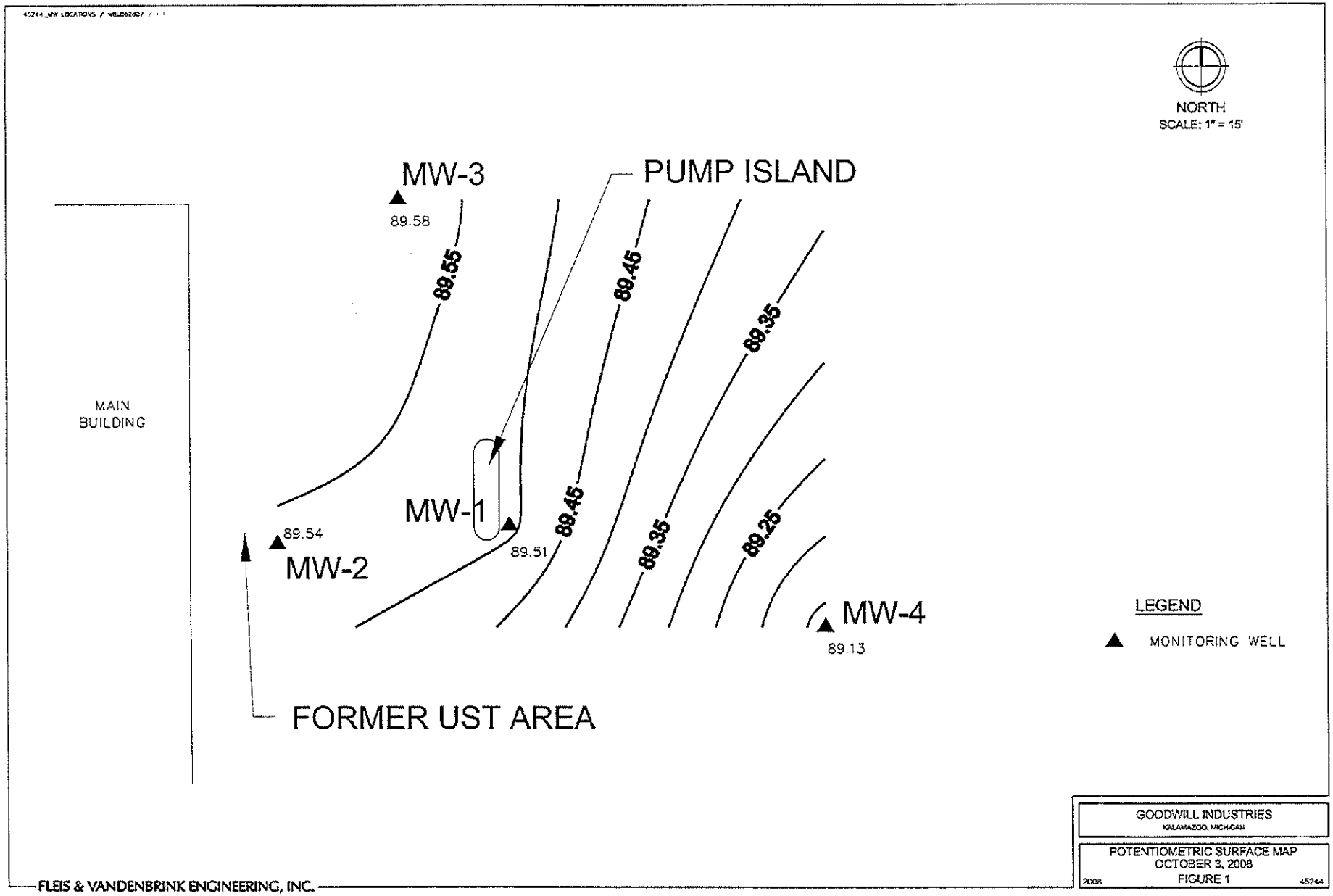

GOODWILL INDUSTRIES
KALAMAZOO, MICHIGAN

POTENTIOMETRIC SURFACE MAP
OCTOBER 3, 2008
FIGURE 1

2008 45244

FLEIS & VANDENBRINK ENGINEERING, INC.

TABLE 1
STATIC WATER ELEVATIONS
2700 North Pitcher Street - Goodwill Industries
Kalamazoo, Michigan

			June 18, 2008		October 3, 2008	
Well No.	TOC Elevation (ft)	Screen Depth (ft)	Depth to Water (ft)	Water Elevation (ft)	Depth to Water (ft)	Water Elevation (ft)
MW-1	93.38	3-8	4.14	89.24	3.87	89.51
MW-2	93.35	3-8	4.10	89.25	3.81	89.54
MW-3	93.67	3-8	4.33	89.34	4.09	89.58
MW-4	92.92	3-8	4.00	88.92	3.79	89.13

TOC - Top of casing

FLEIS & VANDENBRINK ENGINEERING, INC.

Table 2
Groundwater Analytical Summary
2700 North Pitcher Street - Goodwill Industries
Kalamazoo, Michigan

			Sample Location	MW-1	MW-1	MW-2	MW-2	MW-3	MW-3	MW-4	MW-4
			Collection Date	6/18/2008	10/3/2008	6/18/2008	10/3/2008	6/18/2008	10/3/2008	6/18/2008	10/3/2008
			Analysis Date	6/26/2008	10/9/2008	6/26/2008	10/9/2008	6/26/2008	10/9/2008	6/26/2008	10/9/2008
			Depth (feet bgs)	3-8	3-8	3-8	3-8	3-8	3-8	3-8	3-8
	Chemical Abstract Service Number	Residential & Commercial I Drinking Water Criteria & RBSLs	Groundwater Surface Water Interface Criteria & RBSLs								
PARAMETERS											
Benzene (I)	71432	5.0 (A)	200 (X)	<1	<1	1.3	<1	<1	<1	<1	<1
Toluene (I)	108883	790 (E)	140	<1	<1	<1	<1	<1	<1	<1	<1
Ethylbenzene (I)	100414	74 (E)	**18**	<1	2	**22**	<1	<1	<1	<1	<1
Xylenes (I)	1330207	280 (E)	35	<1	<1	<1	<1	<1	<1	<1	<1
1,3,5-Trimethylbenzene (I)	108678	72 (E)	45	<1	<1	6.4	<1	<1	<1	<1	<1
1,2,4-Trimethylbenzene (I)	95636	63 (E)	17	<1	<1	2.5	<1	<1	<1	<1	<1
1,2-Dichloroethane (I)	107062	5.0 (A)	360 (X)	<1	<1	<1	<1	<1	<1	<1	<1
Ethylene dibromide	106934	0.05 (A)	0.2 (X)	<1	<0.05	<1	<0.05	<1	<0.05	<1	<0.05
Naphthalene	91203	520	13	<5	<5	6.1	<5	<5	<5	<5	<5
2-Methylnaphthalene	91576	260	ID	<5	<5	<5	<5	<5	<5	<5	<5
Lead (B)	7439921	4.0 (L)	(G,X)	<3	<3	<3	<3	<3	<3	<3	<3

A footnote is designated by a letter in parentheses and is explained in the attached footnote pages. When the risk-based criterion is less than the target detection limit (TDL), the TDL is listed as the criterion (R 299.5707). In these cases, two numbers are presented in the cell. The first number is the criterion (i.e., TDL), and the second number is the risk-based value.

FLEIS & VANDENBRINK ENGINEERING INC

Bold indicates concentrations above one or more Tier I Risk-Based Screening Level, as published January 23, 2006.

All criteria, unless otherwise noted, are expressed in units of parts per billion (ppb).

FLEIS & VANDENBRINK ENGINEERING, INC.

Troll 9000
10/03/08

Low-Flow System
ISI Low-Flow Log

Project Information:

Operator Name	EDW
Company Name	F&V
Project Name	45244A
Site Name	GWI - 2700 N Pitcher

Pump Information:

Pump Model/Type	Submersible
Tubing Type	pvc
Tubing Diameter	0.18 [in]
Tubing Length	10 [ft]
Pump placement from TOC	7 [ft]

Well Information:

Well Id	**MW-1**
Well diameter	2 [in]
Well total depth	7.95 [ft]
Depth to top of screen	2.95 [ft]
Screen length	60 [in]
Depth to Water	3.87 [ft]

Pumping Information:

Final pumping rate	300 [mL/min]
Flowcell volume	167.04 [mL]
Calculated Sample Rate	34 [sec]
Sample rate	34 [sec]
Stabilized drawdown	0.3 [in]

Low-Flow Sampling Stabilization Summary

	Time	Temp [F]	pH [pH]	Cond [uS/cm]	Turb [NTU]	DO [mg/L]	ORP [mV]
Stabilization Settings			+/-0.2	+/-0.3 +/-3 %	+/-1 +/-10 %	+/-0.2 +/-10 %	+/-20
Last 5 Readings	10:30:05	67.56	6.87	854.63	6.32	28.91	18.60
	10:30:39	67.46	6.88	850.62	5.57	28.72	17.40
	10:31:14	67.40	6.88	847.78	4.45	28.29	15.47
	10:31:49	67.49	6.88	851.00	4.58	28.30	15.39
	10:32:23	67.46	6.88	854.24	4.94	27.15	15.69
Variance in last 3 readings	10:31:14	-0.07	0.01	-2.84	-1.12	-0.44	-1.92
	10:31:49	0.09	0.00	3.22	0.13	0.01	-0.09
	10:32:23	-0.03	0.00	3.25	0.36	-1.15	0.30

Notes: Volume Purged 2 gallon

FLEIS & VANDENBRINK ENGINEERING, INC.

Troll 9000
10/03/08

Low-Flow System
ISI Low-Flow Log

Project Information:

Operator Name	EDW
Company Name	F&V
Project Name	45244A
Site Name	GWI - 2700 N Pitcher

Pump Information:

Pump Model/Type	Submersible
Tubing Type	pvc
Tubing Diameter	0.18 [in]
Tubing Length	10 [ft]
Pump placement from TOC	7 [ft]

Well Information:

Well Id	**MW-2**
Well diameter	2 [in]
Well total depth	7.9 [ft]
Depth to top of screen	2.9 [ft]
Screen length	60 [in]
Depth to Water	3.81 [ft]

Pumping information:

Final pumping rate	300 [mL/min]
Flowcell volume	167.04 [mL]
Calculated Sample Rate	34 [sec]
Sample rate	34 [sec]
Stabilized drawdown	0.3 [in]

Low-Flow Sampling Stabilization Summary

	Time	Temp [F]	pH [pH]	Cond [uS/cm]	Turb [NTU]	DO [mg/L]	ORP [mV]
Stabilization Settings			+/-0.2	+/-0.3 +/-3 %	+/-1 +/-10 %	+/-0.2 +/-10 %	+/-20
Last 5 Readings	9:59:17	66.04	6.99	603.89	33.99	41.23	18.09
	9:59:51	66.01	6.98	604.18	29.50	41.07	19.33
	10:00:26	66.03	6.99	605.05	32.30	41.15	20.52
	10:01:01	66.03	6.98	606.78	34.70	38.93	21.59
	10:01:34	66.01	6.98	607.08	32.09	38.40	22.57
Variance in last 3 readings	10:00:26	0.02	0.00	0.87	2.80	0.09	1.20
	10:01:01	0.00	0.00	1.74	2.40	-2.22	1.07
	10:01:34	-0.03	0.00	0.29	-2.61	-0.53	0.98

Notes: Volume Purged 2 gallon

FLEIS & VANDENBRINK ENGINEERING, INC.

Troll 9000
10/03/08

Low-Flow System
ISI Low-Flow Log

Project Information:

Operator Name	EDW
Company Name	F&V
Project Name	45244A
Site Name	GWI - 2700 N Pitcher

Pump Information:

Pump Model/Type	Submersible
Tubing Type	pvc
Tubing Diameter	0.18 [in]
Tubing Length	10 [ft]
Pump placement from TOC	7 [ft]

Well Information:

Well Id	**MW-3**
Well diameter	2 [in]
Well total depth	7.53 [ft]
Depth to top of screen	2.53 [ft]
Screen length	60 [in]
Depth to Water	4.09 [ft]

Pumping information:

Final pumping rate	300 [mL/min]
Flowcell volume	167.04 [mL]
Calculated Sample Rate	34 [sec]
Sample rate	34 [sec]
Stabilized drawdown	0.3 [in]

Low-Flow Sampling Stabilization Summary

	Time	Temp [F]	pH [pH]	Cond [uS/cm]	Turb [NTU]	DO [mg/L]	ORP [mV]
Stabilization Settings			+/-0.2	+/-0.3 +/-3 %	+/-1 +/-10 %	+/-0.2 +/-10 %	+/-20
Last 5 Readings	9:44:22	67.14	6.79	1110.17	5.59	23.28	-104.44
	9:44:57	67.09	6.79	1113.74	4.49	22.73	-103.84
	9:45:31	67.09	6.79	1118.33	3.39	22.51	-103.20
	9:46:06	67.10	6.79	1112.78	3.62	22.09	-103.07
	9:46:39	67.09	6.79	1109.86	3.95	21.08	-102.99
Variance in last 3 readings	9:45:31	0.00	-0.01	4.58	-1.10	-0.22	0.64
	9:46:06	0.01	0.00	-5.55	0.23	-0.42	0.13
	9:46:39	-0.01	0.00	-2.91	0.33	-1.01	0.08

Notes: Volume Purged 2 gallon

FLEIS & VANDENBRINK ENGINEERING, INC.

Troll 9000
10/03/08

Low-Flow System
ISI Low-Flow Log

Project Information:

Operator Name	EDW
Company Name	F&V
Project Name	45244A
Site Name	GWI - 2700 N Pitcher

Pump Information:

Pump Model/Type	Submersible
Tubing Type	pvc
Tubing Diameter	0.18 [in]
Tubing Length	10 [ft]
Pump placement from TOC	7 [ft]

Well Information:

Well Id	**MW-4**
Well diameter	2 [in]
Well total depth	7.8 [ft]
Depth to top of screen	2.8 [ft]
Screen length	60 [in]
Depth to Water	3.79 [ft]

Pumping information:

Final pumping rate	300 [mL/min]
Flowcell volume	167.04 [mL]
Calculated Sample Rate	34 [sec]
Sample rate	34 [sec]
Stabilized drawdown	0.3 [in]

Low-Flow Sampling Stabilization Summary

	Time	Temp [F]	pH [pH]	Cond [uS/cm]	Turb [NTU]	DO [mg/L]	ORP [mV]
Stabilization Settings			+/-0.2	+/-0.3 +/-3 %	+/-1 +/-10 %	+/-0.2 +/-10 %	+/-20
Last 5 Readings	10:16:36	70.32	7.07	851.24	6.16	45.34	74.14
	10:17:10	70.22	7.07	850.10	5.33	45.35	75.13
	10:17:45	70.25	7.07	854.49	4.34	44.90	75.90
	10:18:20	70.20	7.06	852.01	3.71	44.73	77.09
	10:18:54	70.20	7.07	843.71	3.84	43.67	77.65
Variance in last 3 readings	10:17:45	0.03	0.00	4.39	-0.99	-0.45	0.77
	10:18:20	-0.05	0.00	-2.48	-0.63	-0.17	1.20
	10:18:54	0.00	0.00	-8.30	0.13	-1.06	0.56

Notes: Volume Purged 2 gallon

KAR *Laboratories, Inc.*

4425 Manchester Road
Kalamazoo, MI 49001
Phone 269 381-9666
Fax 269 381-9698
www.karlabs.com

Fleis & VandenBrink Engineering Inc
2960 Lucerne SE
Grand Rapids, MI 49546

Attn : ***Mr. Eric Walters***

KAR Project No. :	***084140***
Date Reported :	***10/14/08***
Date Activated :	***10/03/08***
Date Due :	***10/17/08***
Date Validated :	***10/13/08***

Project Description : ***Analysis of four samples from Goodwill (#45244).***

Dear Client,

Your laboratory data is presented to you in this report. Unless otherwise stated under the "Comments" heading, all tests were performed within the maximum allowable holding times, have met or exceeded QC requirements and the result represents the sample as it was received.

If you wish to contact us about this work please mention KAR Project No. 084140. To arrange additional sampling or testing please contact our Client Services Department. If you have any questions regarding quality assurance please call us.

Thank you for the opportunity to serve you. Please do not hesitate to call if we can provide additional assistance.

Respectfully submitted,

David R. Alkema
Laboratory Manager

KAR Laboratories, Inc. maintains Full Certification status for Bacteriology, Inorganics, Regulated Organics and Synthetic Organics through USEPA, Michigan Department of Public Health and Indiana State Department of Health.

LABORATORY DETAIL REPORT

Client: *Fleis & VandenBrink Engineering Inc*

KAR Project No. : *084140*
Date Reported : *10/14/08*

Project Desc. : *Analysis of four samples from Goodwill (#45244).*

Sample ID : *"MW-1"*
Sampled By : *EDW of Fleis & VandenBrink Engineering, Inc.*
Sample Date : *10/03/08*
Sample Time : *1015*

Date Received : *10/03/08*
Sample Type : *aqueous*
KAR Sample No. : *084140-01*

Test	Result	Units of Measure	Method	Analyzed	Analyst	Comments
Prep, metals	Completed		EPA 30xx,200.x	10/06/08	DBL	
Lead, total	<0.003	mg/L	EPA 200.8	10/09/08	PML	
MDNR Scan 2	See below		EPA 8260	10/09/08	JAR	
Prep, VOA	Completed		EPA 5030	10/09/08	JAR	
1,2,4-Trimethylbenzene	<1	ug/L	EPA 8260	10/09/08	JAR	
1,2-Dichloroethane	<1	ug/L	EPA 8260	10/09/08	JAR	
1,3,5-Trimethylbenzene	<1	ug/L	EPA 8260	10/09/08	JAR	
2-Methylnaphthalene by 8260	<5	ug/L	EPA 8260	10/09/08	JAR	
Benzene	<1	ug/L	EPA 8260	10/09/08	JAR	
Ethylbenzene	2.0	ug/L	EPA 8260	10/09/08	JAR	
M-and/or p-xylene	<2	ug/L	EPA 8260	10/09/08	JAR	
Naphthalene	<5	ug/L	EPA 8260	10/09/08	JAR	
O-Xylene	<1	ug/L	EPA 8260	10/09/08	JAR	
Toluene	<1	ug/L	EPA 8260	10/09/08	JAR	
Prep, 8011	Completed		EPA 8011	10/06/08	GMB	
Ethylene dibromide by 8011	<0.05	ug/L	EPA 8011	10/06/08	GMB	

LABORATORY DETAIL REPORT

Client: *Fleis & VandenBrink Engineering Inc*

KAR Project No. : *084140*
Date Reported : *10/14/08*

Project Desc. : *Analysis of four samples from Goodwill (#45244).*

Sample ID : *"MW-2"*
Sampled By : *EDW of Fleis & VandenBrink Engineering, Inc.*
Sample Date : *10/03/08*
Sample Time : *0930*

Date Received : *10/03/08*
Sample Type : *aqueous*
KAR Sample No. : *084140-02*

Test	Result	Units of Measure	Method	Analyzed	Analyst	Comments
Prep, metals	Completed		EPA 30xx,200.x	10/06/08	DBL	
Lead, total	<0.003	mg/L	EPA 200.8	10/09/08	PML	
MDNR Scan 2	See below		EPA 8260	10/09/08	JAR	
Prep, VOA	Completed		EPA 5030	10/09/08	JAR	
1,2,4-Trimethylbenzene	<1	ug/L	EPA 8260	10/09/08	JAR	
1,2-Dichloroethane	<1	ug/L	EPA 8260	10/09/08	JAR	
1,3,5-Trimethylbenzene	<1	ug/L	EPA 8260	10/09/08	JAR	
2-Methylnaphthalene by 8260	<5	ug/L	EPA 8260	10/09/08	JAR	
Benzene	<1	ug/L	EPA 8260	10/09/08	JAR	
Ethylbenzene	<1	ug/L	EPA 8260	10/09/08	JAR	
M-and/or p-xylene	<2	ug/L	EPA 8260	10/09/08	JAR	
Naphthalene	<5	ug/L	EPA 8260	10/09/08	JAR	
O-Xylene	<1	ug/L	EPA 8260	10/09/08	JAR	
Toluene	<1	ug/L	EPA 8260	10/09/08	JAR	
Prep, 8011	Completed		EPA 8011	10/06/08	GMB	
Ethylene dibromide by 8011	<0.05	ug/L	EPA 8011	10/06/08	GMB	

LABORATORY DETAIL REPORT

Client: *Fleis & VandenBrink Engineering Inc*

KAR Project No. : *084140*
Date Reported : *10/14/08*

Project Desc. : *Analysis of four samples from Goodwill (#45244).*

Sample ID : *"MW-3"*
Sampled By : *EDW of Fleis & VandenBrink Engineering, Inc.*
Sample Date : *10/03/08*
Sample Time : *0915*

Date Received : *10/03/08*
Sample Type : *aqueous*
KAR Sample No. : *084140-03*

Test	Result	Units of Measure	Method	Analyzed	Analyst	Comments
Prep, metals	Completed		EPA 30xx,200.x	10/06/08	DBL	
Lead, total	<0.003	mg/L	EPA 200.8	10/09/08	PML	
MDNR Scan 2	See below		EPA 8260	10/09/08	JAR	
Prep, VOA	Completed		EPA 5030	10/09/08	JAR	
1,2,4-Trimethylbenzene	<1	ug/L	EPA 8260	10/09/08	JAR	
1,2-Dichloroethane	<1	ug/L	EPA 8260	10/09/08	JAR	
1,3,5-Trimethylbenzene	<1	ug/L	EPA 8260	10/09/08	JAR	
2-Methylnaphthalene by 8260	<5	ug/L	EPA 8260	10/09/08	JAR	
Benzene	<1	ug/L	EPA 8260	10/09/08	JAR	
Ethylbenzene	<1	ug/L	EPA 8260	10/09/08	JAR	
M-and/or p-xylene	<2	ug/L	EPA 8260	10/09/08	JAR	
Naphthalene	<5	ug/L	EPA 8260	10/09/08	JAR	
O-Xylene	<1	ug/L	EPA 8260	10/09/08	JAR	
Toluene	<1	ug/L	EPA 8260	10/09/08	JAR	
Prep, 8011	Completed		EPA 8011	10/06/08	GMB	
Ethylene dibromide by 8011	<0.05	ug/L	EPA 8011	10/06/08	GMB	

LABORATORY DETAIL REPORT

Client: *Fleis & VandenBrink Engineering Inc*

KAR Project No. : *084140*
Date Reported : *10/14/08*

Project Desc. : *Analysis of four samples from Goodwill (#45244).*

Sample ID : *"MW-4"*
Sampled By : *EDW of Fleis & VandenBrink Engineering, Inc.*
Sample Date : *10/03/08*
Sample Time : *0950*

Date Received : *10/03/08*
Sample Type : *aqueous*
KAR Sample No. : *084140-04*

Test	Result	Units of Measure	Method	Analyzed	Analyst	Comments
Prep, metals	Completed		EPA 30xx,200.x	10/06/08	DBL	
Lead, total	<0.003	mg/L	EPA 200.8	10/09/08	PML	
MDNR Scan 2	See below		EPA 8260	10/09/08	JAR	
Prep, VOA	Completed		EPA 5030	10/09/08	JAR	
1,2,4-Trimethylbenzene	<1	ug/L	EPA 8260	10/09/08	JAR	
1,2-Dichloroethane	<1	ug/L	EPA 8260	10/09/08	JAR	
1,3,5-Trimethylbenzene	<1	ug/L	EPA 8260	10/09/08	JAR	
2-Methylnaphthalene by 8260	<5	ug/L	EPA 8260	10/09/08	JAR	
Benzene	<1	ug/L	EPA 8260	10/09/08	JAR	
Ethylbenzene	<1	ug/L	EPA 8260	10/09/08	JAR	
M-and/or p-xylene	<2	ug/L	EPA 8260	10/09/08	JAR	
Naphthalene	<5	ug/L	EPA 8260	10/09/08	JAR	
O-Xylene	<1	ug/L	EPA 8260	10/09/08	JAR	
Toluene	<1	ug/L	EPA 8260	10/09/08	JAR	
Prep, 8011	Completed		EPA 8011	10/06/08	GMB	
Ethylene dibromide by 8011	<0.05	ug/L	EPA 8011	10/06/08	GMB	

KAR Laboratories, Inc. (269-381-9666) www.karlabs.com

Client: Fleis & VanDenBrink

Attn: Eric Walters

Phone: (616) 977-1000 Fax: ( )

Cell: (616) 262-6908 Email:

Project Name: Goodwill

Project #: 45244

P.O. #:

Sampled by: ☐ KAR ☒ Client Initials: EOW

Turnaround Time:
☒ 10-business days ☐ Emergency (quote)
☐ 5-business days (x 1.5)
☐ 3-business days (x 2.0) ☐ Monthly

Samples rec'd Cold: Y N Intact: Y N

KAR use only
Proj#: 08140
Login: A
Date: 10/3/08
c-of-c Y N
labels Y N
LODs Y N
contain Y N
headspace Y N
amount Y N
hold time Y N
rush cost Y N

#	Sample Identification	Sample Info Date	Time	Matrix	Sample Containers Type	Size	#	BTEX, TMBs, 1,2-dichloroethane	Naph & 2-Methylnaph	EDB (low level)	Total Lead						Remarks
	MW-1	10/3/08	10:15	WTR	G,P	40ml-4 250	5	X	X	X	X						
	MW-2	↓	9:30	↓	↓	↓	5	X	X	X	X						
	MW-3	↓	9:15	↓	↓	↓	5	X	X	X	X						
	MW-4	↓	9:50	↓	↓	↓	5	X	X	X	X						

Relinquished By:	Received By:	Date/Time:	Notes:
[signature]	[signature]	10-3-08 12:26pm	Samples not filtered
Relinquished By:	Received By:	Date/Time:	

Goodwill Industries
K200

FLEIS & VANDENBRINK
ENGINEERING, INC.
Offices in Michigan and Indiana
2960 Lucerne Drive S.E., Grand Rapids, MI 49546
Office (616) 977-1000 Fax (616) 977-1005

Date: November 5, 2008

TRANSMITTAL FORM

Attention: **Mr. David O'Donnell**

To: **Department of Environmental Quality**
7953 Adobe Road
Kalamazoo MI 49009

Project No.: **45244B**

Project Description: **Facility ID 0-003454**

Job Location: **2700 N. Pitcher, Kalamazoo**
2nd Quarter Sampling Report

QTY	DESCRIPTION
1	Second Quarter DEQ Leaking Underground Storage Tank Supplemental Report for 2700 N. Pitcher, Kalamazoo

REMARKS:

Please contact me at (616) 977-1000 ext. 142 if you need additional information.

RECEIVED
NOV - 6 2008
MDEQ-KAL-RRD

- ☐ For Approval
- ☐ For Field Use
- ☐ For Your File
- ☐ Other
- ☐ For Grade Inspection
- ☐ For Your Information
- ☒ As Requested

CC: **John Dillworth, Goodwill Industries**

FLEIS & VANDENBRINK ENGINEERING, INC.

By:

Eric Walters, CPG

DEQ TRANSMITTAL 11-05-08.doc

DEQ MICHIGAN DEPARTMENT OF ENVIRONMENTAL QUALITY
STORAGE TANK DIVISION

NOTICE OF ON-SITE WORK ACTIVITY FAX TRANSMITTAL

Authorized by the Natural Resources and Environmental Protection Act, 1994 PA 451, as amended, (Act 451), Part 213

INSTRUCTIONS: Complete this form to notify the Storage Tank Division (STD) 48 hours in advance of on-site activities as required under Act 451. Failure to provide this notification may result in fines as provided in Act 451. See form on page 2 for a complete list of STD District Offices and fax numbers.

Today's Date 9/30/08 Time 9:00 am No. of pages including transmittal sheet 1

SENT TO:

MDEQ Project Manager or District Supervisor: David O'Donnell

District Office: Kalamazoo

Telephone Number: (269) 567-3525 Fax Number: (269) 567-9440

SENT BY:

Site Contact Person: Eric Walters

Company/Division: Fleis and VandenBrink Engineering

Address: 2960 Lucerne Drive, Grand Rapids, MI 49546

Telephone Number: 616-262-6908 Fax Number: 616-977-1005

SITE INFORMATION:

Facility Name: Goodwill Industries

Contact Person: John Dillworth Phone Number: 269-382-0490

Address: 2700 North Pitcher Street County: Kalamazoo

Facility ID#: 0-0003454 MERA Site ID#:

On-Site Work Dates: 10/3/08

NOTE - TELEPHONE THE DISTRICT OFFICE ASAP IF SCHEDULE CHANGES.

Starting Time: 10 a.m. Ending Time: 1 pm

Type of Activity: Quarterly sampling (2)

Location: On-site wells

Goodwill Industries
Kzoo
3454

FLEIS & VANDENBRINK
ENGINEERING, INC.
Offices in Michigan and Indiana

July 15, 2008

RECEIVED
JUL 16 2008
MDEQ-KAL-RRD

Mr. Joe Hayes
Department of Environmental Quality
Kalamazoo District Office
7953 Adobe Road
Kalamazoo, MI 49009-5026

RE: Groundwater Sampling
2700 North Pitcher Street
Facility ID 3454

Dear Mr. Hayes:

In accordance with our discussion and part 213 regulations we collected the attached groundwater data from four wells from the above referenced facility on June 18, 2008. All samples were collected using low-flow techniques; however, due to technical difficulties we were only able to recover the data (attached) from monitoring wells 3 and 4. The samples were analyzed by KAR Labs of Kalamazoo, Michigan for the following leaded gasoline parameters: BTEX, TMB, EDB, 1, 2-DCA, Naphthalene, 2-Methylnaphthalene and dissolved lead. No concentrations of the analyzed parameters were detected above the DEQ target DLs (refer to attached data and MDEQ Criteria Comparison) above the MDEQ Part 201 Generic Cleanup Criteria, except for Ethylbenzene which exceeds the GSI criteria for MW-2.

Static water levels were measured for the 4 monitoring wells on June 19, 2008. The attached groundwater flow map indicates a southeasterly groundwater flow direction. We anticipate collecting another round of quarterly samples during September and will notify you prior to our on-site activities.

Per our past discussions, our goal is to complete our field work and close the site with a land use restriction.

If you have any concerns or questions, please contact me at 373-7529.

Sincerely yours,

FLEIS & VANDENBRINK ENGINEERING, INC.

Ralph L. Freed

Ralph L. Freed, CPG
Project Manager

cc: John Dillworth, Goodwill Industries

Enclosures: EQP 3849 Cover Sheet
Low-flow data
Analytical Data
MDEQ Criteria Comparison
Groundwater Flow Map

45244B Letter to DEQ-0608 (2).doc

1601 Portage Street, Kalamazoo, MI 49001 • Office: (269) 385-0011 • Fax: (269) 382-6972 • www.fveng.com

FLEIS & VANDENBRINK
ENGINEERING, INC.
Offices in Michigan and Indiana
1601 Portage Street, Kalamazoo, MI 49001
Office (269) 385-0011 Fax (269) 382-6972

Facsimile Cover Sheet

To: **Mr. Joe Hayes**
Company: **Kalamazoo MDEQ**
Phone: **567-3514**
Fax: **567-9440**

From: **Ralph Freed**
Company: **FLEIS & VANDENBRINK ENGINEERING, INC.**
Phone: **(269) 373-7529**
Fax: **(269) 382-6972**

Date: **June 10, 2008**
Pages Including this Cover Page: **2**
Cc: John Dillworth
Notes: **Notice of On-Site Activity**

FaxKAL2006.dot

Document Faxed _____

DEQ MICHIGAN DEPARTMENT OF ENVIRONMENTAL QUALITY
STORAGE TANK DIVISION

NOTICE OF ON-SITE WORK ACTIVITY FAX TRANSMITTAL

Authorized by the Natural Resources and Environmental Protection Act, 1994 PA 451, as amended. (Act 451), Part 213

INSTRUCTIONS: Complete this form to notify the Storage Tank Division (STD) 48 hours in advance of on-site activities as required under Act 451. Failure to provide this notification may result in fines as provided in Act 451. See form on page 2 for a complete list of STD District Offices and fax numbers.

Today's Date 6/10/08 Time 4:00 pm No. of pages including transmittal sheet 1

SENT TO:

MDEQ Project Manager or District Supervisor: Joe Hayes

District Office: Kalamazoo

Telephone Number: (269) 567-3514 Fax Number: (269) 567-9440

SENT BY:

Site Contact Person: Ralph Freed

Company/Division: Fleis and VandenBrink Engineering

Address: 1601 Portage Street, Kalamazoo, MI 49001

Telephone Number: 269 373-7529 Fax Number: 269-382-6972)

SITE INFORMATION:

Facility Name: Goodwill Industries

Contact Person: John Dillworth Phone Number: 269-382-0490

Address: 2700 North Pitcher Street County: Kalamazoo

Facility ID#: 0-0003454 MERA Site ID#:

On-Site Work Dates: 6/18/08

NOTE - TELEPHONE THE DISTRICT OFFICE ASAP IF SCHEDULE CHANGES.

Starting Time: 9 a.m. Ending Time: 4 pm

Type of Activity: Quarterly sampling

Location: On-site wells

DEQ MICHIGAN DEPA. .MENT OF ENVIRONMENTAL QUALITY – REMEDIA .N & REDEVELOPMENT DIVISION
PO BOX 30426, LANSING, MI 48909-7926, Phone 517-373-9837, Fax 517-373-2637, E-mail DEQ-STD-TANKS@michigan.gov

NOTICE OF ON-SITE WORK ACTIVITY FAX TRANSMITTAL

Authorized by the Natural Resources and Environmental Protection Act, 1994 PA 451, as amended, (Act 451), Part 213

INSTRUCTIONS: Complete this form to notify the Remediation & Redevelopment Division (RRD) 48 hours in advance of on-site activities as required under Act 451. Failure to provide this notification may result in fines as provided in Act 451.
See form EQP4410 for a complete list of RRD District Offices and fax numbers.

Today's Date 9/26/07 Time 4:11 No. of pages including transmittal sheet 2

SENT TO:

MDEQ Project Manager or District Supervisor: Joe Hayes
District Office: Kalamazoo

Telephone Number: 269-567-3514 Fax Number: 269-567-9440

SENT BY:

Site Contact Person: Ralph Freed

Company/Division: Fleis & VandenBrink Engineering

Address: 1601 Portage Street, Kalamazoo, MI

Telephone Number: 373-7529 Fax Number: 382-7982

SITE INFORMATION:

Facility Name: Goodwill Industries

Contact Person: Ralph Freed Phone Number: 373-7529

Address: 2700 N Pitcher St County: Kalamazoo

Facility ID#: unknown MERA Site ID#:

On-Site Work Dates: Friday, 9/28/07

NOTE - TELEPHONE THE DISTRICT OFFICE ASAP IF SCHEDULE CHANGES.

Starting Time: 9:40 Ending Time: 4:00

Type of Activity: Sample wells

Location: East side of building

FLEIS & VANDENBRINK
ENGINEERING, INC.
Offices in Michigan and Indiana
1601 Portage Street, Kalamazoo, MI 49001
Office (269) 385-0011 Fax (269) 382-6972

Facsimile Cover Sheet

To: **MDEQ**
Company: **JOE HAYES**
Phone: **567-3514**
Fax: **567-9440**

From: **RALPH FREED** RF
Company: **FLEIS & VANDENBRINK ENGINEERING, INC.**
Phone: **(269) 385-0011**
Fax: **(269) 382-6972**

Date: 10/25/07
Pages including this Cover Page: 2

Notes:

Document

Document Faxed Work Notice

MICHIGAN DEPARTMENT OF ENVIRONMENTAL QUALITY – REMEDIATION & REDEVELOPMENT DIVISION
PO BOX 30426, LANSING, MI 48909-7926, Phone 517-373-9837, Fax 517-373-2637, E-mail DEQ-STD-TANKS@michigan.gov

NOTICE OF ON-SITE WORK ACTIVITY FAX TRANSMITTAL

Authorized by the Natural Resources and Environmental Protection Act, 1994 PA 451, as amended, (Act 451), Part 213

INSTRUCTIONS: Complete this form to notify the Remediation & Redevelopment Division (RRD) 48 hours in advance of on-site activities as required under Act 451. Failure to provide this notification may result in fines as provided in Act 451.
See form EQP4410 for a complete list of RRD District Offices and fax numbers.

Today's Date 10/25/07 Time 4:50 No. of pages including transmittal sheet 2

SENT TO:

MDEQ Project Manager or District Supervisor: Joe Hayes
District Office: Kalamazoo

Telephone Number: 269-567-3514 Fax Number: 269-567-9440

SENT BY:

Site Contact Person: Ralph Freed

Company/Division: Fleis & VandenBrink Engineering

Address: 1601 Portage Street, Kalamazoo, MI

Telephone Number: 373-7529 Fax Number: 382-7982

SITE INFORMATION:

Facility Name: Goodwill Industries

Contact Person: Ralph Freed Phone Number: 373-7529

Address: 2700 N Pitcher St County: Kalamazoo

Facility ID#: unknown 3454 MERA Site ID#:

On-Site Work Dates: Monday, 10/29/07

NOTE - TELEPHONE THE DISTRICT OFFICE ASAP IF SCHEDULE CHANGES.

Starting Time: 7:40 Ending Time: 4:00

Type of Activity: Sample soil for SPLP

Location: East side of building

STATE OF MICHIGAN
DEPARTMENT OF ENVIRONMENTAL QUALITY
KALAMAZOO DISTRICT OFFICE

JENNIFER M. GRANHOLM
GOVERNOR

STEVEN E. CHESTER
DIRECTOR

October 26, 2007

Mr. John Dillworth
Goodwill Industries
420 E. Alcott Street
Kalamazoo, MI 49001

Dear Mr. Dillworth:

SUBJECT: Time Extension Approval for an Initial Assessment Report
Confirmed Release Number: C-0148-07
Goodwill Industries, 2700 N. Pitcher Street, Kalamazoo, MI 49004
(Kalamazoo County)
Facility ID#: 00003454

This will acknowledge receipt of a letter dated September 14, 2004, submitted by Fleis & Vandenbrink Engineering, Inc. on behalf of Goodwill Industries of Southwest Michigan, requesting a one-month extension for submittal of the Initial Assessment Report (IAR) for the above-subject release. The Department of Environmental Quality (DEQ), Remediation and Redevelopment Division (RRD) may grant an extension of reporting time frames for good cause, pursuant to Section 21313a(3) of the Natural Resources and Environmental Protection Act, 1994 PA 451, as amended.

Based upon the review of this information, assessment of the progress of the corrective actions at the site, the apparent risk classification of the site, and your basis for requesting an extension of time for submittal of the report, staff of the RRD have determined that granting an extension of time is appropriate. T*he request for a one-month extension of the IAR due date is hereby approved*, and the new due date for this submittal is *November 17, 2007.*

Please contact Joseph Hayes, Project Manager, at 269-567-3514, if you have any further questions.

Sincerely,

David O'Donnell, Supervisor
Kalamazoo District Office
Remediation and Redevelopment Division
269-567-3525

cc: Mr. Ralph Freed, Fleis & Vandenbrink Engineering, Inc.
Mr. Joseph Hayes, DEQ

Goodwill Industries
Fac #3454
Kalamazoo Co.

RECEIVED
SEP 17 2007
MDEQ-RRD

FLEIS & VANDENBRINK
ENGINEERING, INC.
Offices in Michigan and Indiana

September 14, 2007

Mr. Joe Hayes
Department of Environmental Quality
Kalamazoo District Office
7953 Adobe Road
Kalamazoo, MI 49009-5026

RE: Extension of IAR Report
2700 North Pitcher Street
Facility ID 3454

Dear Mr. Hayes:

Thank you for taking the time to talk with me on September 14, 2007. As I mentioned, we are working with Goodwill Industries to characterize and close a leaking UST at the above-referenced site. We have had several setbacks including miscommunication, pump failures and drilling delays and are currently not likely to obtain all the required data before the IAR reporting deadline of October 17, 2007

The site in question is located behind the building at 2700 North Pitcher Street in an area that is surrounded by a locked chain link fence. Although we have not completed our initial round of sampling, we suspect that the site would be classified at a level 4 and that there is no demonstrable long-term threats to human health, safety or sensitive environmental receptors.

Our goal is to complete our field work and close the site with a land restriction. The fact that the site is enclosed with a locked fence and covered with concrete or asphalt seems to make the site ideally suited for a land restriction.

We are requesting an extension of one month for the reporting deadline to allow us time to obtain the necessary data and close the site. We still need to review the field data and discuss the consequences with our client.

If you have any concerns or questions, please contact me at 373-7529.

Sincerely yours,

FLEIS & VANDENBRINK ENGINEERING, INC.

Ralph Freed

Ralph L. Freed
Project Manager

cc: John Dillworth, Goodwill Industries

F/WordP/45244A/Letter to DEQ

10/25/2007 16:45

Spoke to Ralph Freed re: progress of investigation. More progress has been made toward site investigation than was indicated in 09/17/2007 IAR extension request. RF confirmed that 9 soil & 4 water samples have been collected. GSI in source area was the only exceedance of gw sample.

Downgradient samples are < MDLs.

JH

DEQ MICHIGAN DEPARTMENT OF ENVIRONMENTAL QUALITY – REMEDIATION & REDEVELOPMENT DIVISION
PO BOX 30426, LANSING, MI 48909-7926, Phone 517-373-9837, Fax 517-373-2637, E-mail DEQ-STD-TANKS@michigan.gov

NOTICE OF ON-SITE WORK ACTIVITY FAX TRANSMITTAL

Authorized by the Natural Resources and Environmental Protection Act, 1994 PA 451, as amended, (Act 451), Part 213

INSTRUCTIONS: Complete this form to notify the Remediation & Redevelopment Division (RRD) 48 hours in advance of on-site activities as required under Act 451. Failure to provide this notification may result in fines as provided in Act 451.
See form EQP4410 for a complete list of RRD District Offices and fax numbers.

Today's Date 9/6/07 Time 4:11 No. of pages including transmittal sheet 2

SENT TO:

MDEQ Project Manager or District Supervisor: Joe Hayes
District Office: Kalamazoo

Telephone Number: 269-567-3514 Fax Number: 269-567-9440

SENT BY:

Site Contact Person: Ralph Freed

Company/Division: Fleis & VandenBrink Engineering

Address: 1601 Portage Street, Kalamazoo, MI

Telephone Number: 373-7529 Fax Number: 382-7982

SITE INFORMATION:

Facility Name: Goodwill Industries

Contact Person: Ralph Freed Phone Number: 373-7529

Address: 2700 N Pitcher St County: Kalamazoo

Facility ID#: #3454 ~~unknown~~ MERA Site ID#:

On-Site Work Dates: Tuesday, 9/11/07

NOTE - TELEPHONE THE DISTRICT OFFICE ASAP IF SCHEDULE CHANGES.

Starting Time: 8:00 Ending Time: 6:00

Type of Activity: Installing soil borings and wells

Location: East side of building

3906 03 460 010

INDUSTRIAL ASSESSMENT RECORD

3906 03 460 010

File #1002300 S.D.#40 Zone

Date of Transfer	Grantee's Name	Address	Revenue Stamp	Verified Sale Price	Map No.	Book No.	Page No.	Parcel Code No.
					sec.3	1	10	G3-51/1B

Property Address 2700 N. PITCHER St. Ave.

Building or Alteration Permit	Date	Amount
#15364 TRASH COMPACTOR ENCLOSURE	5-18-88	$ –

DESCRIPTION

GOODWILL INDUSTRIES OF SOUTHWESTERN MICHIGAN INC.
2700 N. PITCHER ST
KALAMAZOO MICH

G3-51 2B sec 3-2-11 com at S1/4 post sec 3 th W alg S li SD sec 45.13 ft to ctr li Pitcher St th N 10DEG39MINW thereon 870.84 ft th S 89DEG48MINE 33.58 ft to E li SD st for pl beg th S 89DEG48MINE 1172.49 ft to W li GTW RR Row th S ODEG31MINW thereon 279.01 ft th N 89DEG48MINW 1117.53 ft to E li SD st th N 10DEG39MINW thereon 283.89 ft to beg 7.33 A

LAND SKETCH

1991
1,1036

CONSTRUCTION		Good		Average
		Poor		Cheap

YEAR BUILT

YEAR REMODELED

PERCENT CONDITION

LAND VALUE COMPUTATIONS

Lot Size	Depth Factor	Equiv. Front	Rate	Base Value
7.33 A. @		2,000	$ /A	$ 14,660
(1989)		5,500	/A =	40,320
SEWER HOOK UP - 11-95				

TOTAL LAND	$ 40,320
TOTAL LAND IMPROVEMENTS	$
TOTAL BUILDING	$ 243140
TOTAL APPRAISED VALUE	$ 283,460
	(141700-97)

Year	Assessed Valuation	Board of Review	Tax Commission
1970	$ –	$	$
1973	-0-		
1979	-0-		
1988	EXEMPT 107,700		
1991	118,900 EXEMPT.		

PLAN OF BUILDING

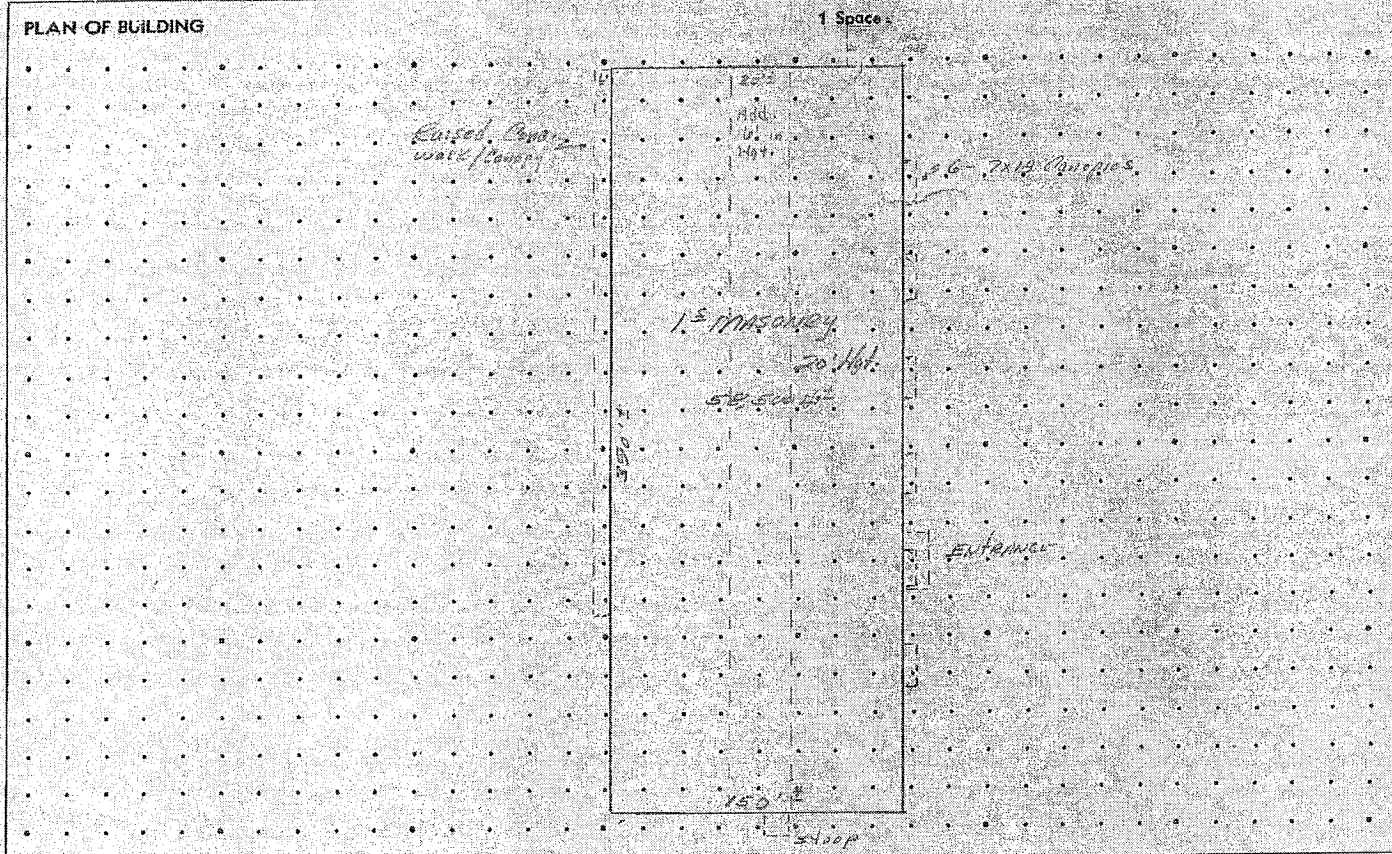

1. TYPE	
	Factory Grade A
✓	Factory Grade B
	Factory Grade C
	Iron Clad
	Warehouse
	Office
	Shed

2. FOUNDATION	
	Post
✓	Concrete
	Brick
	Pile
	Conc. Block
	Stone

3. EXT. WALLS	
	Siding
	Steel Sash
	Tile
✓	Brick
	Brick Veneer
	Corrugated Panel
	Conc. Block
	Stone

4. ROOF TYPE	
	Dome
	Gable
✓	Flat
	Hip

5. ROOF CONST'N	
✓	built up

6. CONSTRUCTION	
	Wood Frame
	Conc. Block
✓	Brick
✓	Steel Frame
	Reinf. Concrete

7. FLOORS	
	Pine
	Hardwood
✓	Concrete
	Tile

8. BASEMENT	
✓	None
	Part
	Full
	Conc. Floor

9. MISC.	
✓	Sprinkler
	Air Conditioning
	Elevators
✓	Lavatories
	Heating
✓	R. R. Sidings
	Stacks
	Tanks

REMARKS: Exempt

Creative wood specialties occupy approx 5000 ft - provides work for Goodwill employees - no rent being paid - will be moving out of bldg in 2/84

58,500 ft @ 3.00 = 175,500

Person Interviewed DAVID DAVEY

Examined By [illegible] Date 12-12-84

BUILDING VALUE [illegible]ATIONS

Value	Additions an[illegible] Item	[illegible]unt	Reproduction Cost New	Phys. Dep. % Cond.	Reproduction Cost Dep'd	Economi[illegible] Cond.	[illegible]alue
		$	$				$

North West View

South Side View

DESCRIPTION — RESIDENTIAL PROPERTY — ASSESSMENT NO. 100 2300

G 3-51 Goodwill Industries of Ex (68)
2B Southwestern Michigan Inc ex (69)
~~41~~ 2700 N Pitcher St
40 Kalamazoo Michigan

Sec 3-2-11 Com at S¼ post Sec 3 th W alg S li sd sec 45.13 ft to ctr li Pitcher St th N 10°39'W thereon 870.84 ft th S 89°48'E 33.58 ft to E li sd St for pl beg th S 89°48'E 1172.49 ft to

G 3-51 *
2B

W li GTW RR ROW th S 0°31'W thereon 279.01 ft th N 89°48'W 1117.53 ft to E li sd St th N 10°39'W thereon 283.89 ft to beg 7.33 A

60 - Adding partitions inside 3/61

ADDRESS OF PROPERTY

DATE OF TRANSFER	RECORD OF OWNERSHIP	LIBER-PAGE

PROPERTY FACTORS

TOPOGRAPHY		IMPROVEMENTS	
LEVEL		WATER	
HIGH		SEWER	
LOW		GAS	
ROLLING		ELECTRICITY	
SWAMPY		ALL UTILITIES	
STREET		**TREND OF DISTRICT**	
PAVED		IMPROVING	
SEMI-IMPROVED		STATIC	
DIRT		DECLINING	
SIDEWALK			

ASSESSMENT RECORD

19	LAND	
	BLDGS.	
	TOTAL	
19	LAND	
	BLDGS.	
	TOTAL	
19	LAND	
	BLDGS.	
	TOTAL	
19	LAND	
	BLDGS.	
	TOTAL	
19	LAND	
	BLDGS.	
	TOTAL	
	LAND	

LAND VALUE COMPUTATIONS AND SUMMARY

GE	DEPTH	UNIT PRICE	DEPTH FACTOR	FRONT. FT. PRICE	TOTAL	1950 TAX VAL	BD. REV.	19.....TAX VAL.	
TOTAL VALUE LAND									

~~RESIDENTIAL~~ ASSESSMENT RECORD

INDUSTRIAL

PARCEL FILE # 006 003 460 010 | CITY/TOWNSHIP CLASS 701 | S.D. #40 | ZONE: E IND DIST | MAP # | BOOK # | CODE #

	GRANTEE	SALE PRICE	SALE DATE	INST. TYPE	TERMS OF SALE	LIBER PAGE	VERIFIED SALE	PERMIT	DATE	AMOUNT	PROJECT
5								1502	9-2-97	800	OPEN GAZEBO 12x13
4											
3											
2											
1	GOODWILL INDUSTRIES OF SW MICH										

PROPERTY ADDRESS 2700 N PITCHER

KALAMAZOO MICH 49007

1002300 3906 03 460 010
G3-51 2B SEC 3-2-11 COM AT S1/4 POST
SEC 3 TH W ALG S LI SD SEC 45.13 FT TO
CTR LI PITCHER ST TH N 10DEG 39MIN W
THEREON 870.84 FT TH S 89DEG 48MIN E
33.58FT TO E LI SD ST FOR PL BEG TH S 89
DEG 48MIN E 1172.49 FT TO W LI GTW RR
ROW TH S 0DEG 31 MIN W THEREON 279.01 FT
TH N 89 DEG 48 MIN W 1117.53 FT TO E LI
SD ST TH N 10 DEG 39 MIN W THEREON
283.89 FT TO BEG 7.33A

LAND		LOT SIZE	DEPTH FACTOR	EQUIV. FRONT	RATE	TRUE CASH VALUE
LEVEL		7.33 ACRES @	5500/A:			40320
ROLLING		SEE MAP ON				
HIGH		BACK OF CARD				
LOW						
SWAMPY						
LANDSCAPED						

IMPROVEMENTS	
DIRT-GRAVEL	
SEAL COAT	
PAVED	
CURBED	
SIDEWALK	
SEWER 11-95	X
WATER	
ELECTRIC	
GAS	

TREND	
STATIC	
IMPROVING	
DECLINING	

LAND IMPROVEMENTS	VALUE NEW	% COND.	
WELL			
SEPTIC TANK			
DRIVE			
FENCE			
LANDSCAPING			

TOTAL LAND PLUS IMPROVEMENTS	40320
TOTAL BUILDINGS	320,110
TOTAL TRUE CASH	360,430

VALUE

REMARKS:

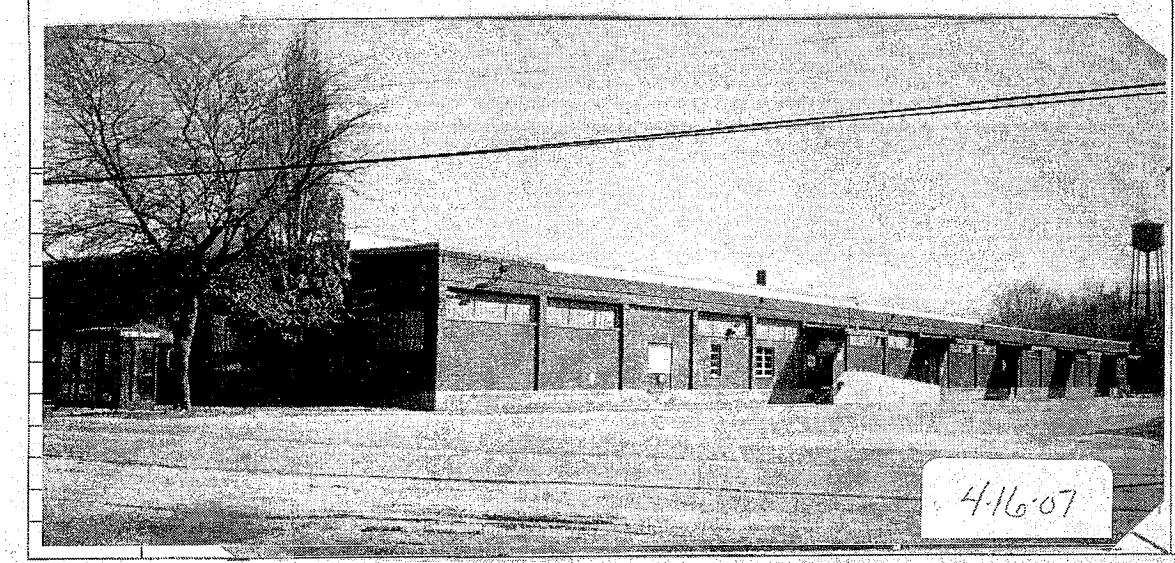

YEAR	LAND	BLDGS. & IMPR.	ASSM'T.	BD.-REV.	TRIBUNAL	BD. OF REV. NUMBER
1990						
1991		EXEMPT	118900			
1998		EXEMPT	148,200			
2000		"	154,400			
2003		"	162600			
2004		"	168,000			
2005		"	180,200			
2006		"	193,800			
2007		"	215,800			

TYPE

- [ ] Single Family
- [x] STEEL FRAME, BRICK
- [ ] Wood Frame

Year Built: ? Year Remod.:

- [ ] Number Rooms
- [ ] Basement
- [ ] 1st Floor
- [ ] 2nd Floor
- [ ] Baths
- [ ] Total Bedrooms

$

1. EXTERIOR

- [ ] Wood, Shingle
- [ ] Aluminum, Vinyl
- [x] Brick
- [ ] Block
- [ ] Stone
- [ ] Insulation

$

2. WINDOWS

Many		Large	
Avg.		Avg.	
Few		Small	

- Wood Sash
- Metal Sash
- Vinyl Sash
- Double Hung
- Horiz. Sliding
- Casement
- Double Glass
- Storms & Screens
- Patio Doors

3. ROOF

Gable		Gambrel	
Hip		Mansard	
Flat			

- [ ] Eavestrough
- [ ] Asphalt Shingles
- [x] BUILT-UP
- [ ] Insulation

Chimney type "

Front overhang "

Other overhang

4. INTERIOR

- [ ] Drywall
- [ ] Plaster
- [ ] Paneled

Trim & Decoration: Ex. | Ord. | Small

Size of Closets: Lg. | Ord. | Small

Number of Closets: Many | Ord. | Few

Doors: Solid | H.C.

5. FLOORS

Family Fl

Other: CONCRETE

6. CEILINGS

- [ ] Drywall
- [ ] Plaster
- [ ] Tile
- [ ] Suspended

7. EXCAVATION

Basement - NONE - S.F.

Crawl S.F.

Slab S.F.

Height to Joists F.T.

8. BASEMNT., WALLS & FLOORS

- Concrete Block
- Poured Conc.
- [ ] Treated Wood
- [ ] Concrete Floor

9. BASEMENT & FINISH

Wall Finish

Floor Finish

Ceiling Finish

Walkout

Insulation

10. FLOOR SUPPORT

Joists "x " "o.c.

Unsupported Length ft.

Sill Plate ☐ Yes ☐ No

Diag. Sub-Floor " x "

Ply. Sub-Floor "

Center Support

$

11. HEATING & AIR COND.

Gas	Oil	Elec.
Wood	Coal	Steam

- [ ] Forced Warm Air
- [ ] Forced Warm Water
- [ ] Stove or Space Heat
- [ ] Heat Pump/Air
- [ ] Heat Pump/Water
- [ ] Wall Fur. | Fir. Fur.

No Heat | 1st Flr. | 2nd

Central Air Cond. Tons

12. ELECTRIC

Amps Service

No. & Qual. Elec. Fixtures: Ex. | Ord. | Min.

No. Electric Outlets: Many | Ord. | Few

$

13. PLUMBING

- [ ] No Baths
- [ ] Ceramic Tile Floor
- [ ] Ceramic Tile Wainscot
- [ ] Tub Alcove
- [ ] Exhaust Fan
- [ ] Extra Stool
- [ ] Extra Lav.
- [ ] Fiberglass Bath Unit
- [ ] Separate Shower
- [ ] Water Softener | Owned | Leased

Water Heater | Gallons | Gas | Elec.

14.

WATER | Public | Well

SEWER | Public | Septic

15. BUILT-IN ITEMS

- [ ] Oven
- [ ] Range
- [ ] Microwave
- [ ] Hood & Fan, Vented | Yes | No
- [ ] Dishwasher
- [ ] Disposal
- [ ] Trash Compactor
- [x] SPRINKLER SYSTEM
- [ ] Fireplace | Foundation | Pre-Fab
- [ ] Free Standing Fireplace

Chimney | 1 Sty. | 2 Sty. | Inside | Outside

Cupboard Length | Quality

16. PORCHES

Wide	Deep	Type

Priced by

Date

Checked by SB 12-12-84

Date INTERVIEWED DAVID DAVEY

Size for Rates S.F. CLASS

Typical Classes of Other Houses in this Neighborhood

Neighborhood is ☐Improving ☐Stable ☐Declining

Condition for Age Effective Age

17. GARAGE/CARPORT

Year Built

Attached | Separate

Cars | Condition

Wide | Deep

Exterior Wall

Floor | Roof

Doors

Common Wall

Wall Finish

Ceiling

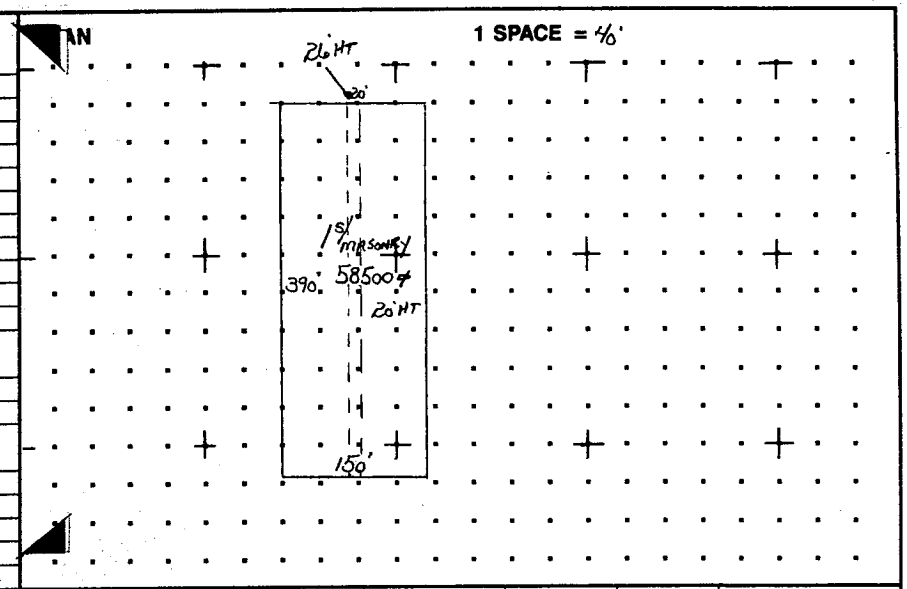

ITEM	SQUARE FEET / LINEAL FEET	UNIT COST	BASE COST	COUNTY MULT.	DEPR. % GOOD	DEPRECIATED COST

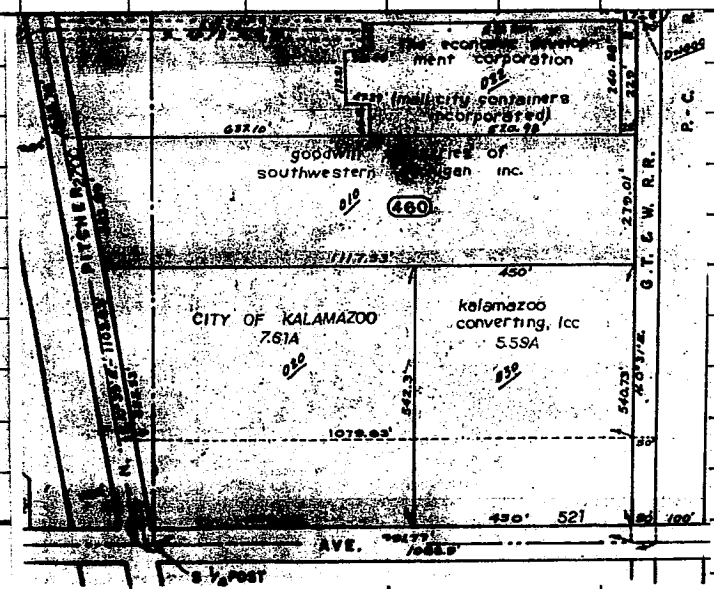

COUNTY MULTIPLIER

COST NEW

Total Dept. Cost. $

E.C.F. x

True Cash Value $

NO. ML M293B (REV. 1/88) RESIDENTIAL ASSESSMENT RECORD (PRINTED ON 20 LB. BOND - ALSO AVAILABLE ON CARD STOCK) FORM APPROVED BY STATE TAX COMMISSION
BROS. & CO., KALAMAZOO, MICHIGAN.

APPENDIX G

USER'S RESPONSIBILITIES DOCUMENTATION
USER QUESTIONNAIRE
SELLER QUESTIONNAIRE

DeLisle Associates LTD
Geologists ▫ Industrial Hygienists ▫ Educators

Mr. Mark DuCharme
Department of Environmental Quality
Remediation and Redevelopment Division
7953 Adobe Road
Kalamazoo, Michigan 49009-5026

Via Email
ducharmem@michigan.gov

Subject: Goodwill Industries, 2700 North Pitcher Street, Kalamazoo, Michigan

DeLisle Associates LTD (DeLisle) has recently completed additional investigative activities at Goodwill Industries, 2700 North Pitcher Street, Kalamazoo, Michigan.

In summary, the work was conducted inside the building for the collection of soil samples and installation of soil gas wells for monitoring the soil vapor extraction system (SVE). A total of thirteen (13) soils borings were conducted with twelve (12) soil samples being collected and submitted for laboratory analysis. Seven (7) soil gas wells (SGWs) were installed in selected borings to provide for soil gas sampling at the five (5) foot interval below grade and also to provide measuring points for SVE vacuum influence. Site Map-1 depicts soil sampling and soil gas well (SGW) locations.

Analytical results showed six (6) of the twelve (12) samples indicate the presence of only Tetrachloroethene (PCE). Four (4) of the six (6) samples contained PCE above the Drinking Water Protection Criteria (DWPC). All samples with PCE detections were well below the Soil Volatilization to Indoor Air Inhalation Criteria (SVIIC). Provided are a Soil Results table for the twelve (12) soil samples, Table 3-Analytical Results comparing sample results to Industrial Criteria, and the laboratory analytical report.

The SGWs are constructed with 1 inch diameter PVC material. The 10 slot well screen is one (1) foot long and placed to straddle the 5 foot interval below grade. Clean sand was placed around the well screen and up the casing to a bentonite seal. The SGWs were finished with a flush mount protective cover for future access.

During SVE operation, vacuum measurements were collected from the seven (7) SGWs. Based on the results, the radius of influence for each vapor extraction well (VE) appears to exceed the originally estimated radius of 30 feet. Site Map-2 shows the vapor extraction radius of influence for the minimal operating capacity of the SVE unit.

In addition, air samples were collected from the SVE unit to monitor the extracted vapors for compliance with air discharge requirements. The analytical results of the SVE total extracted vapors measured 20 mg/m^3 for PCE, and below the method detection level ($<1 mg/m^3$) between carbon vessels and at the vent discharge.

Sincerely,

Andy Graham

Andy Graham - CPG
Environmental Department Manager
Encs.

5050 S. Sprinkle Road, Portage, Michigan 49002
Phone 269.373.4500 Fax 269.373.1044
www.delisleassoc.net

DeLisle Associates LTD

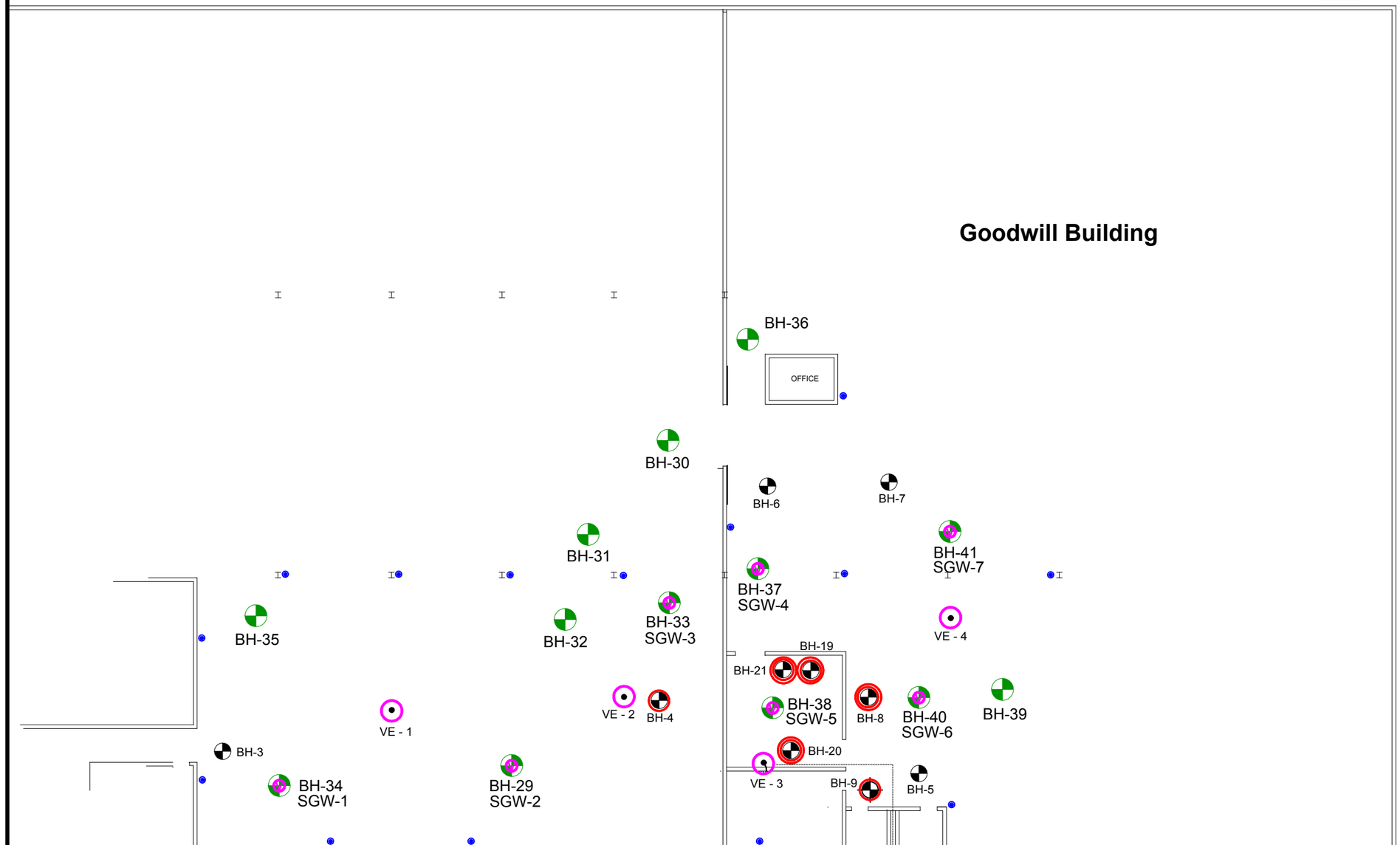

LEGEND

BH-35 Soil Borings BH-29 to BH-41 Conducted in May 2009

BH-29 SGW-2 Soil Boring with Soil Gas Well installed.

VE - 1 Soil Vapor Extraction Well

Air Vent (14)

Vacuum at 25 cfm per VE well (100 cfm SVE system total)

Soil sample with PCE and TCE exceeding Indoor Air Criteria

Soil sample with PCE exceeding Indoor Air Criteria

N

Scale 1"=20 ft

5 10

SITE MAP -1

Soil Sampling and Soil Gas Well (SGW) Locations

Goodwill Industries of SW Michigan
2700 North Pitcher Street
Kalamazoo, Michigan

May 18, 2009

DeLisle Associates LTD

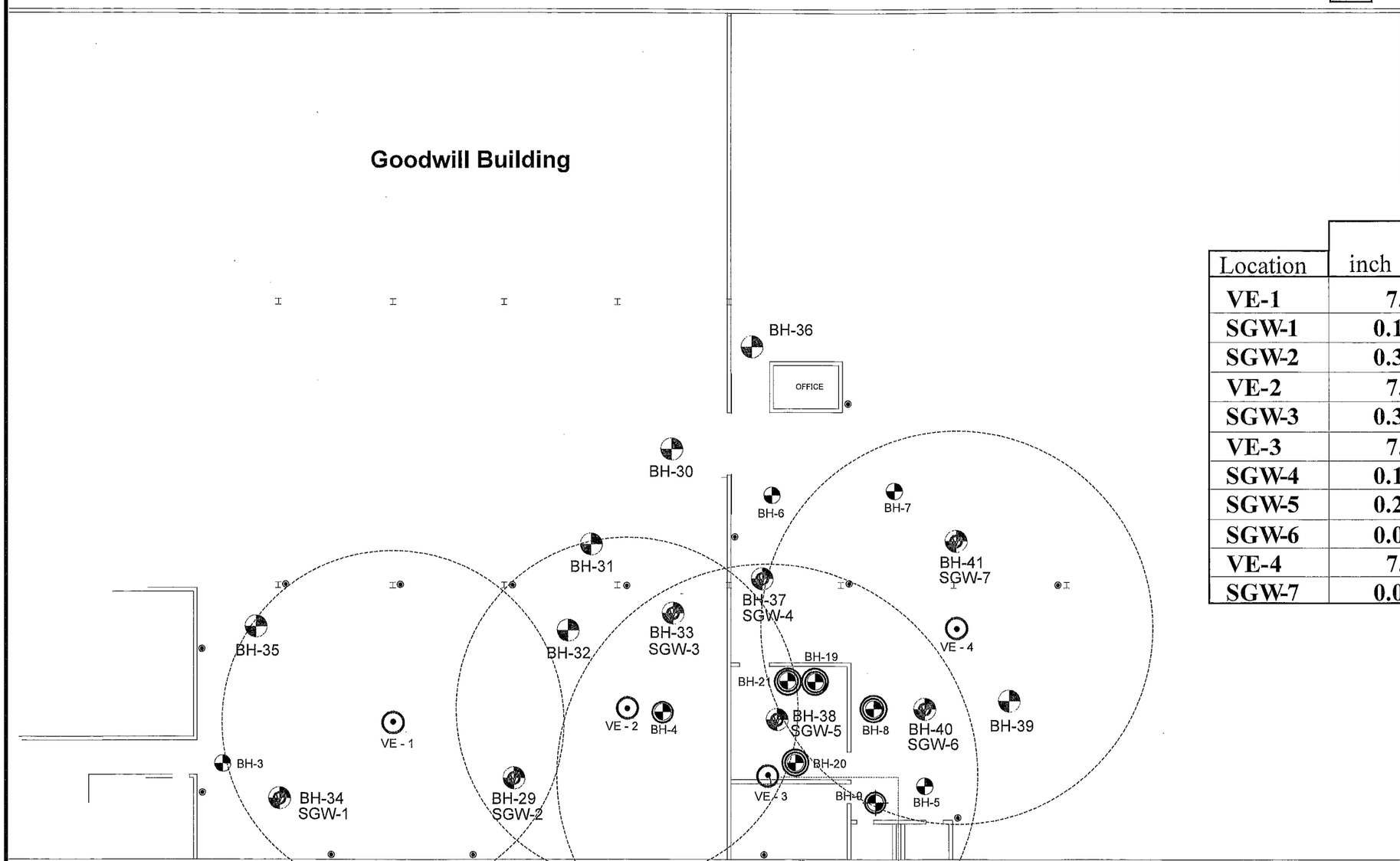

Location	Vacuum inch H_2O	Vacuum CFM
VE-1	7.0	~20-25
SGW-1	0.135	---
SGW-2	0.330	---
VE-2	7.0	~20-25
SGW-3	0.330	---
VE-3	7.0	~20-25
SGW-4	0.145	---
SGW-5	0.235	---
SGW-6	0.030	---
VE-4	7.1	~20-25
SGW-7	0.055	---

LEGEND

- BH-35 — Soil Borings BH-29 to BH-41 Conducted in May 2009
- BH-29 SGW-2 — Soil Boring with Soil Gas Well installed.
- VE - 1 — Soil Vapor Extraction Well
- Air Vent (14)
- Soil sample with PCE and TCE exceeding Indoor Air Criteria
- Soil sample with PCE exceeding Indoor Air Criteria
- Vapor Extraction Well Minimum Radius of Influence

N

Scale 1"=20 ft

5 10

SITE MAP -2

Vapor Extraction Radius of Influence

Goodwill Industries of SW Michigan
2700 North Pitcher Street
Kalamazoo, Michigan

May 29, 2009

DeLisle Associates LTD
Geologists • Industrial Hygienists • Educators

Goodwill Industries of Southwest Michigan

Soil Results Table

May 2009

					Results ug/Kg			
Location	Sample No.	Date	Depth feet	Type (S/W)	PCE	TCE	cis-DCE	VC
BH-29	EN08-101-66	5/18/09	4.5-5.0	S	<50	<50	<50	<40
BH-30	EN08-101-67	5/18/09	4.0-4.5	S	<50	<50	<50	<40
BH-31	EN08-101-68	5/18/09	4.5-5.0	S	<50	<50	<50	<40
BH-32	EN08-101-69	5/18/09	4.5-5.0	S	<50	<50	<50	<40
BH-33	EN08-101-70	5/18/09	6.0-6.5	S	**110**	<50	<50	<40
BH-34	EN08-101-71	5/19/09	4.0-4.5	S	**68**	<50	<50	<40
BH-35	EN08-101-72	5/19/09	4.0-4.5	S	<50	<50	<50	<40
BH-36	EN08-101-73	5/19/09	3.5-4.0	S	**62**	<50	<50	<40
BH-37	EN08-101-74	5/19/09	3.0-3.5	S	**550**	<50	<50	<40
BH-38	No Sample	5/19/09	various	S	Field screen soils with PID			
BH-39	EN08-101-75	5/19/09	3.5-4.0	S	**1,300**	<50	<50	<40
BH-40	EN08-101-76	5/19/09	4.5-5.0	S	**150**	<50	<50	<40
BH-41	EN08-101-77	5/19/09	3.5-4.0	S	<50	<50	<50	<40

PCE=Tetrachloroethene TCE=Trichloroethene cis-DCE=cis-1,2 Dichloroethene VC=Vinyl Chloride TMB=Trimethylbenzene

5050 S. Sprinkle Road, Portage, Michigan 49002
Phone 269.373.4500 Fax 269.373.1044
www.delisleassoc.net

Table 3-Analytical Results: Soil May 2009

Volatiles (VOCs) by GC/MS (5035) (µg/Kg) - EPA Method Reference SW8260B

MDEQ Part 201 Industrial and Commercial II, III & IV Generic Cleanup Criteria & Screening Levels

Substance		Soil Boring / Soil Sample Location												Groundwater Protection			Indoor Air	Ambient Air				Direct Contact	
Chemical Name	**CAS#**	**BH-29**	**BH-30**	**BH-31**	**BH-32**	**BH-33**	**BH-34**	**BH-35**	**BH-36**	**BH-37**	**BH-39**	**BH-40**	**BH-41**	**DWPC**	**GSIPC**	**GCPC**	**SVIIC**	**VSIC (IS)**	**VSIC (5M)**	**VSIC (2M)**	**PSIC**	**DCC**	**C_{SAT}**
cis-DCE	156592	ND	ND	ND	ND	ND	ND	ND	ND	ND	ND	ND	ND	1,400	12,000	6.4E+5	**41,000**	2.1E+5	4.3E+5	1.0E+6	1.0E+9	6.4E+5	6.4E+5
PCE	127184	ND	ND	ND	ND	110	68	ND	62	550	1,300	150	ND	100	900	88,000	**60,000**	1.8E+5	1.4E+6	3.3E+6	6.8E+9	88,000	88,000
TCE	79016	ND	ND	ND	ND	ND	ND	ND	ND	ND	ND	ND	ND	100	4,000	4.4E+5	**37,000**	2.6E+5	4.4E+5	1.1E+6	2.3E+9	5.0E+5	5.0E+5
1,2,4-TMB	95636	ND	ND	ND	ND	ND	110	ND	ND	ND	ND	ND	63	2,100	570	1.1E+5	**1.1E+5**	2.1E+7	6.0E+8	6.0E+8	3.6E+10	1.1E+5	1.1E+5

cis-DCE = cis-1,2-Dichloroethylene PCE = Tetrachloroethylene TCE = Trichloroethylene 1,2,4-TMB = 1,2,4-Trimethylbenzene 1,3,5-TMB = 1,3,5-Trimethylbenzene

ND = Parameter concentration is below the analytical Method Detection Level (MDL) or Practical Quantitaion Limit (PQL) and reported as "Non-Detect".

= Parameter concentration exceeds one (1) or more applicable MDEQ Part 201 criteria for soil.

BIO-CHEM
ENVIRONMENTAL
ANALYTICAL
LABORATORIES

1049 - 28th Street SE
Grand Rapids, MI 49508
Ph: 616/248-4900
Toll Free: 800/362-LABS
Fax: 616/248-4904

May 28, 2009

Andy Graham
DeLisle Associates Ltd.
5050 Sprinkle Rd.
Portage, MI 49002

TEL: (269) 373-4500
FAX (269) 373-1044

RE: Goodwill Industries

Dear Andy Graham: Order No.: 0905117

BIO-CHEM Laboratories, Inc. received 12 samples on 5/20/2009 for the analyses presented in the following report.

There were no problems with the analyses and all data for associated QC met EPA or laboratory specifications except where noted in the Case Narrative.

If you have any questions regarding these tests results, please feel free to call.

Please note that unless otherwise instructed, residual samples will be held for sixty (60) days from the original report date. At that time, all non-hazardous samples will be disposed of in accordance with federal, state and local regulations and ordinances, and hazardous samples shall be returned to you. Please contact the laboratory within thirty (30) days if other arrangements for sample retention need to be made.

Sincerely,

Cindy Euwema

Cindy Euwema
Office Manager

Working with you to ensure a better tomorrow.

0905117

page 1 of 2

1/2

Bic Chem LABORATORIES, INC.

1049 28th Street SE • Grand Rapids, MI 49508
Ph: (616) 248-4900 • Toll Free: 800-362-LABS
Fax: (616) 248-4904

Chain of Custody

Bichem Work # 5248
P.O.# 09-120

Project Number: EN08-101

Firm Name: DeLisle Associates LTD	Turn around time: Standard	Date: 5/19/09	Date Due:
Firm Address: 5050 Sprinkle Rd	Project Name: Goodwill Industries		
City, State, Zip: Portage, MI	State Samples Taken From:		
Phone: 269 373-4500 / Fax: 269 373-1044	Contact Person: Andy Graham		

Item No	Lab I.D.	Client Sample Number	Date Taken	Time Taken	Sample Description (sample type: water, soil, other)	Number of Containers	Analysis Desired (One per line): Volatiles								Remarks
1	01	EN08-101-66	5/18/09	1200	Soil	2 +	X								Field preserved with methanol
2	02	EN08-101-67	5/18/09	1210	Soil	2 +	X								10 ml MeOH : 10 g Soil
3	03	EN08-101-68	5/18/09	1330	Soil	2 +	X								
4	04	EN08-101-69	5/18/09	1430	Soil	2 +	X								
5	05	EN08-101-70	5/18/09	1530	Soil	2 +	X								
6	06	EN08-101-71	5/19/09	1125	Soil	2 +	X								
7	07	EN08-101-72	5/19/09	1135	Soil	2 +	X								
8	08	EN08-101-73	5/19/09	1200	Soil	2 +	X								
9	09	EN08-101-74	5/19/09	1300	Soil	2 +	X								
10	10	EN08-101-75	5/19/09	1500	Soil	2 +	X								

Released by	Received by	Date	Time
AJ Graham	David [illegible]	[illegible]	10:[illegible]

Laboratory use only

☐ Blue Ice ____°

☐ Regular Ice

☐ No Coolant

FRANKLIN PRESS 45267.2/08

page 2 of 2

0905117

BIO-CHEM ENVIRONMENTAL ANALYTICAL LABORATORIES
1049 28th Street SE
Grand Rapids, MI 49508
PH: (616) 248-4900
Toll Free: 800-362-LABS
FAX: (616) 248-4904

Chain of Custody

Project Number: EN08-101

Firm Name: DeLisle Associates
Turn around time: Standard
Date: 5/19/09
Date Due:

Firm Address: 5050 Sprinkle Rd
Project Name: Goodwill Industries

City, State, Zip: Portage, MI
State Samples Taken From:

Phone: 269-373-4500
Fax: 269-373-1044
Contact Person: Andy Graham

Item No.	Lab I.D.	Client Sample Number	Date Taken	Time Taken	Sample Description (sample type: water, soil, other)	Number of Containers	Analysis Desired (One per line) Volatiles								Remarks
1	11	EN08-101-76	5/19/09	1600	Soil	2	X								Field preserved with methanol
2	12	EN08-101-77	5/19/09	1645	Soil	2	X								10ml MeOH : 10g Soil
3															
4															
5															
6															
7															
8															
9															
10															

Released by	Received by	Date	Time
[signature]	[signature]	[illegible]	[illegible]

Laboratory use only

☐ Blue Ice ____°

☐ Regular Ice

☐ No Coolant

FRANKLIN PRESS 40407 6 06

BIO-CHEM Laboratories, Inc.

Date: *28-May-09*

CLIENT: DeLisle Associates Ltd.
Project: Goodwill Industries
Lab Order: 0905117

Work Order Sample Summary

Lab Sample ID	Client Sample ID	Matrix	Collection Date	Date Received
0905117-01A	EN08-101-66	Soil	5/18/2009	5/20/2009
0905117-02A	EN08-101-67	Soil	5/18/2009	5/20/2009
0905117-03A	EN08-101-68	Soil	5/18/2009	5/20/2009
0905117-04A	EN08-101-69	Soil	5/18/2009	5/20/2009
0905117-05A	EN08-101-70	Soil	5/18/2009	5/20/2009
0905117-06A	EN08-101-71	Soil	5/19/2009	5/20/2009
0905117-07A	EN08-101-72	Soil	5/19/2009	5/20/2009
0905117-08A	EN08-101-73	Soil	5/19/2009	5/20/2009
0905117-09A	EN08-101-74	Soil	5/19/2009	5/20/2009
0905117-10A	EN08-101-75	Soil	5/19/2009	5/20/2009
0905117-11A	EN08-101-76	Soil	5/19/2009	5/20/2009
0905117-12A	EN08-101-77	Soil	5/19/2009	5/20/2009

BIO-CHEM Laboratories, Inc.

Date: *28-May-09*

CLIENT: DeLisle Associates Ltd.
Project: Goodwill Industries
Lab Order: 0905117

CASE NARRATIVE

Samples are routinely analyzed using methods outlined in the following references:

(SW) Test Methods for Evaluating Solid Waste, Physical/Chemical Methods, SW846, 3rd Ed.
(E) Methods for Chemical Analysis of Water and Wastes, EPA-600/4-79-020.
(A) Standard Methods for the Examination of Water and Wastewater, APHA, 18th Ed.
(D) Annual Book of ASTM Standards.

Specific methods utilized for this project are provided in the analytical report and are identified by the reference document abbreviation ( ) followed by the method number.

All QA/QC and sample analyses met method, laboratory and/or regulatory data quality objectives unless otherwise specified below.

No data qualifications required.

BIO-CHEM Laboratories, Inc.

Date: *5/28/2009*

ANALYTICAL REPORT

CLIENT: DeLisle Associates Ltd.
Lab Order: 0905117
Project: Goodwill Industries
Lab Sample ID: 0905117-01A

Project Number: EN08-101
Client Sample ID: EN08-101-66
Collection Date: 5/18/2009
Matrix: SOIL

Analyses	Method Ref.	Result	Q	PQL	Units	DF	Analyst	Date
Volatiles by GC/MS (5035)								
1. 1,1,1-Trichloroethane	SW8260B	< 50		50	µg/Kg-dry	1	GCP	5/21/2009
2. 1,1,2,2-Tetrachloroethane	SW8260B	< 50		50	µg/Kg-dry	1	GCP	5/21/2009
3. 1,1,2-Trichloroethane	SW8260B	< 50		50	µg/Kg-dry	1	GCP	5/21/2009
4. 1,1-Dichloroethane	SW8260B	< 50		50	µg/Kg-dry	1	GCP	5/21/2009
5. 1,1-Dichloroethene	SW8260B	< 50		50	µg/Kg-dry	1	GCP	5/21/2009
6. 1,2,4-Trimethylbenzene	SW8260B	< 50		50	µg/Kg-dry	1	GCP	5/21/2009
7. 1,2-Dibromoethane	SW8260B	< 50		50	µg/Kg-dry	1	GCP	5/21/2009
8. 1,2-Dichlorobenzene	SW8260B	< 50		50	µg/Kg-dry	1	GCP	5/21/2009
9. 1,2-Dichloroethane	SW8260B	< 50		50	µg/Kg-dry	1	GCP	5/21/2009
10. 1,2-Dichloropropane	SW8260B	< 50		50	µg/Kg-dry	1	GCP	5/21/2009
11. 1,3,5-Trimethylbenzene	SW8260B	< 50		50	µg/Kg-dry	1	GCP	5/21/2009
12. 1,3-Dichlorobenzene	SW8260B	< 50		50	µg/Kg-dry	1	GCP	5/21/2009
13. 1,4-Dichlorobenzene	SW8260B	< 50		50	µg/Kg-dry	1	GCP	5/21/2009
14. Benzene	SW8260B	< 50		50	µg/Kg-dry	1	GCP	5/21/2009
15. Bromodichloromethane	SW8260B	< 50		50	µg/Kg-dry	1	GCP	5/21/2009
16. Bromoform	SW8260B	< 50		50	µg/Kg-dry	1	GCP	5/21/2009
17. Bromomethane	SW8260B	< 50		50	µg/Kg-dry	1	GCP	5/21/2009
18. Carbon tetrachloride	SW8260B	< 50		50	µg/Kg-dry	1	GCP	5/21/2009
19. Chlorobenzene	SW8260B	< 50		50	µg/Kg-dry	1	GCP	5/21/2009
20. Chloroethane	SW8260B	< 50		50	µg/Kg-dry	1	GCP	5/21/2009
21. Chloroform	SW8260B	< 50		50	µg/Kg-dry	1	GCP	5/21/2009
22. Chloromethane	SW8260B	71		50	µg/Kg-dry	1	GCP	5/21/2009
23. cis-1,2-Dichloroethene	SW8260B	< 50		50	µg/Kg-dry	1	GCP	5/21/2009
24. cis-1,3-Dichloropropene	SW8260B	< 50		50	µg/Kg-dry	1	GCP	5/21/2009
25. Dibromochloromethane	SW8260B	< 50		50	µg/Kg-dry	1	GCP	5/21/2009
26. Ethylbenzene	SW8260B	< 50		50	µg/Kg-dry	1	GCP	5/21/2009
27. m,p-Xylene	SW8260B	< 100		100	µg/Kg-dry	1	GCP	5/21/2009
28. Methyl tert-butyl ether	SW8260B	< 250		250	µg/Kg-dry	1	GCP	5/21/2009
29. Methylene chloride	SW8260B	< 100		100	µg/Kg-dry	1	GCP	5/21/2009
30. o-Xylene	SW8260B	< 50		50	µg/Kg-dry	1	GCP	5/21/2009
31. Tetrachloroethene	SW8260B	< 50		50	µg/Kg-dry	1	GCP	5/21/2009
32. Toluene	SW8260B	< 50		50	µg/Kg-dry	1	GCP	5/21/2009
33. trans-1,2-Dichloroethene	SW8260B	< 50		50	µg/Kg-dry	1	GCP	5/21/2009
34. trans-1,3-Dichloropropene	SW8260B	< 50		50	µg/Kg-dry	1	GCP	5/21/2009
35. Trichloroethene	SW8260B	< 50		50	µg/Kg-dry	1	GCP	5/21/2009
36. Trichlorofluoromethane	SW8260B	< 50		50	µg/Kg-dry	1	GCP	5/21/2009
37. Vinyl chloride	SW8260B	< 40		40	µg/Kg-dry	1	GCP	5/21/2009

Definitions: PQL - Practical Quantitation Limit
DF - Dilution Factor

Qualifiers (Q): J - Detected below PQL but above MDL: Estimated
S - Spike Recovery Outside Acceptance Limits
B - Analyte detected in associated Method Blank
N - See case narrative for explanation

This report shall not be reproduced except in full, without the written approval of BIO-CHEM Laboratories, Inc.

Note: The sample results reported are based on the sample aliquot(s) tested.

BIO-CHEM Laboratories, Inc.

Date: *5/28/2009*

ANALYTICAL REPORT

CLIENT: DeLisle Associates Ltd.
Lab Order: 0905117
Project: Goodwill Industries
Lab Sample ID: 0905117-02A

Project Number: EN08-101
Client Sample ID: EN08-101-67
Collection Date: 5/18/2009
Matrix: SOIL

Analyses	Method Ref.	Result	Q	PQL	Units	DF	Analyst	Date
Volatiles by GC/MS (5035)								
1. 1,1,1-Trichloroethane	SW8260B	< 50		50	µg/Kg-dry	1	GCP	5/21/2009
2. 1,1,2,2-Tetrachloroethane	SW8260B	< 50		50	µg/Kg-dry	1	GCP	5/21/2009
3. 1,1,2-Trichloroethane	SW8260B	< 50		50	µg/Kg-dry	1	GCP	5/21/2009
4. 1,1-Dichloroethane	SW8260B	< 50		50	µg/Kg-dry	1	GCP	5/21/2009
5. 1,1-Dichloroethene	SW8260B	< 50		50	µg/Kg-dry	1	GCP	5/21/2009
6. 1,2,4-Trimethylbenzene	SW8260B	< 50		50	µg/Kg-dry	1	GCP	5/21/2009
7. 1,2-Dibromoethane	SW8260B	< 50		50	µg/Kg-dry	1	GCP	5/21/2009
8. 1,2-Dichlorobenzene	SW8260B	< 50		50	µg/Kg-dry	1	GCP	5/21/2009
9. 1,2-Dichloroethane	SW8260B	< 50		50	µg/Kg-dry	1	GCP	5/21/2009
10. 1,2-Dichloropropane	SW8260B	< 50		50	µg/Kg-dry	1	GCP	5/21/2009
11. 1,3,5-Trimethylbenzene	SW8260B	< 50		50	µg/Kg-dry	1	GCP	5/21/2009
12. 1,3-Dichlorobenzene	SW8260B	< 50		50	µg/Kg-dry	1	GCP	5/21/2009
13. 1,4-Dichlorobenzene	SW8260B	< 50		50	µg/Kg-dry	1	GCP	5/21/2009
14. Benzene	SW8260B	< 50		50	µg/Kg-dry	1	GCP	5/21/2009
15. Bromodichloromethane	SW8260B	< 50		50	µg/Kg-dry	1	GCP	5/21/2009
16. Bromoform	SW8260B	< 50		50	µg/Kg-dry	1	GCP	5/21/2009
17. Bromomethane	SW8260B	< 50		50	µg/Kg-dry	1	GCP	5/21/2009
18. Carbon tetrachloride	SW8260B	< 50		50	µg/Kg-dry	1	GCP	5/21/2009
19. Chlorobenzene	SW8260B	< 50		50	µg/Kg-dry	1	GCP	5/21/2009
20. Chloroethane	SW8260B	< 50		50	µg/Kg-dry	1	GCP	5/21/2009
21. Chloroform	SW8260B	< 50		50	µg/Kg-dry	1	GCP	5/21/2009
22. Chloromethane	SW8260B	< 50		50	µg/Kg-dry	1	GCP	5/21/2009
23. cis-1,2-Dichloroethene	SW8260B	< 50		50	µg/Kg-dry	1	GCP	5/21/2009
24. cis-1,3-Dichloropropene	SW8260B	< 50		50	µg/Kg-dry	1	GCP	5/21/2009
25. Dibromochloromethane	SW8260B	< 50		50	µg/Kg-dry	1	GCP	5/21/2009
26. Ethylbenzene	SW8260B	< 50		50	µg/Kg-dry	1	GCP	5/21/2009
27. m,p-Xylene	SW8260B	< 100		100	µg/Kg-dry	1	GCP	5/21/2009
28. Methyl tert-butyl ether	SW8260B	< 250		250	µg/Kg-dry	1	GCP	5/21/2009
29. Methylene chloride	SW8260B	< 100		100	µg/Kg-dry	1	GCP	5/21/2009
30. o-Xylene	SW8260B	< 50		50	µg/Kg-dry	1	GCP	5/21/2009
31. Tetrachloroethene	SW8260B	< 50		50	µg/Kg-dry	1	GCP	5/21/2009
32. Toluene	SW8260B	< 50		50	µg/Kg-dry	1	GCP	5/21/2009
33. trans-1,2-Dichloroethene	SW8260B	< 50		50	µg/Kg-dry	1	GCP	5/21/2009
34. trans-1,3-Dichloropropene	SW8260B	< 50		50	µg/Kg-dry	1	GCP	5/21/2009
35. Trichloroethene	SW8260B	< 50		50	µg/Kg-dry	1	GCP	5/21/2009
36. Trichlorofluoromethane	SW8260B	< 50		50	µg/Kg-dry	1	GCP	5/21/2009
37. Vinyl chloride	SW8260B	< 40		40	µg/Kg-dry	1	GCP	5/21/2009

Definitions: PQL - Practical Quantitation Limit
DF - Dilution Factor

Qualifiers (Q): J - Detected below PQL but above MDL: Estimated
S - Spike Recovery Outside Acceptance Limits
B - Analyte detected in associated Method Blank
N - See case narrative for explanation

This report shall not be reproduced except in full, without the written approval of BIO-CHEM Laboratories, Inc.

Note: The sample results reported are based on the sample aliquot(s) tested.

BIO-CHEM Laboratories, Inc.

Date: *5/28/2009*

ANALYTICAL REPORT

CLIENT: DeLisle Associates Ltd.
Lab Order: 0905117
Project: Goodwill Industries
Lab Sample ID: 0905117-03A

Project Number: EN08-101
Client Sample ID: EN08-101-68
Collection Date: 5/18/2009
Matrix: SOIL

Analyses	Method Ref.	Result	Q	PQL	Units	DF	Analyst	Date
Volatiles by GC/MS (5035)								
1. 1,1,1-Trichloroethane	SW8260B	< 50		50	µg/Kg-dry	1	GCP	5/21/2009
2. 1,1,2,2-Tetrachloroethane	SW8260B	< 50		50	µg/Kg-dry	1	GCP	5/21/2009
3. 1,1,2-Trichloroethane	SW8260B	< 50		50	µg/Kg-dry	1	GCP	5/21/2009
4. 1,1-Dichloroethane	SW8260B	< 50		50	µg/Kg-dry	1	GCP	5/21/2009
5. 1,1-Dichloroethene	SW8260B	< 50		50	µg/Kg-dry	1	GCP	5/21/2009
6. 1,2,4-Trimethylbenzene	SW8260B	< 50		50	µg/Kg-dry	1	GCP	5/21/2009
7. 1,2-Dibromoethane	SW8260B	< 50		50	µg/Kg-dry	1	GCP	5/21/2009
8. 1,2-Dichlorobenzene	SW8260B	< 50		50	µg/Kg-dry	1	GCP	5/21/2009
9. 1,2-Dichloroethane	SW8260B	< 50		50	µg/Kg-dry	1	GCP	5/21/2009
10. 1,2-Dichloropropane	SW8260B	< 50		50	µg/Kg-dry	1	GCP	5/21/2009
11. 1,3,5-Trimethylbenzene	SW8260B	< 50		50	µg/Kg-dry	1	GCP	5/21/2009
12. 1,3-Dichlorobenzene	SW8260B	< 50		50	µg/Kg-dry	1	GCP	5/21/2009
13. 1,4-Dichlorobenzene	SW8260B	< 50		50	µg/Kg-dry	1	GCP	5/21/2009
14. Benzene	SW8260B	< 50		50	µg/Kg-dry	1	GCP	5/21/2009
15. Bromodichloromethane	SW8260B	< 50		50	µg/Kg-dry	1	GCP	5/21/2009
16. Bromoform	SW8260B	< 50		50	µg/Kg-dry	1	GCP	5/21/2009
17. Bromomethane	SW8260B	< 50		50	µg/Kg-dry	1	GCP	5/21/2009
18. Carbon tetrachloride	SW8260B	< 50		50	µg/Kg-dry	1	GCP	5/21/2009
19. Chlorobenzene	SW8260B	< 50		50	µg/Kg-dry	1	GCP	5/21/2009
20. Chloroethane	SW8260B	< 50		50	µg/Kg-dry	1	GCP	5/21/2009
21. Chloroform	SW8260B	< 50		50	µg/Kg-dry	1	GCP	5/21/2009
22. Chloromethane	SW8260B	< 50		50	µg/Kg-dry	1	GCP	5/21/2009
23. cis-1,2-Dichloroethene	SW8260B	< 50		50	µg/Kg-dry	1	GCP	5/21/2009
24. cis-1,3-Dichloropropene	SW8260B	< 50		50	µg/Kg-dry	1	GCP	5/21/2009
25. Dibromochloromethane	SW8260B	< 50		50	µg/Kg-dry	1	GCP	5/21/2009
26. Ethylbenzene	SW8260B	< 50		50	µg/Kg-dry	1	GCP	5/21/2009
27. m,p-Xylene	SW8260B	< 100		100	µg/Kg-dry	1	GCP	5/21/2009
28. Methyl tert-butyl ether	SW8260B	< 250		250	µg/Kg-dry	1	GCP	5/21/2009
29. Methylene chloride	SW8260B	< 100		100	µg/Kg-dry	1	GCP	5/21/2009
30. o-Xylene	SW8260B	< 50		50	µg/Kg-dry	1	GCP	5/21/2009
31. Tetrachloroethene	SW8260B	< 50		50	µg/Kg-dry	1	GCP	5/21/2009
32. Toluene	SW8260B	< 50		50	µg/Kg-dry	1	GCP	5/21/2009
33. trans-1,2-Dichloroethene	SW8260B	< 50		50	µg/Kg-dry	1	GCP	5/21/2009
34. trans-1,3-Dichloropropene	SW8260B	< 50		50	µg/Kg-dry	1	GCP	5/21/2009
35. Trichloroethene	SW8260B	< 50		50	µg/Kg-dry	1	GCP	5/21/2009
36. Trichlorofluoromethane	SW8260B	< 50		50	µg/Kg-dry	1	GCP	5/21/2009
37. Vinyl chloride	SW8260B	< 40		40	µg/Kg-dry	1	GCP	5/21/2009

Definitions: PQL - Practical Quantitation Limit
DF - Dilution Factor

Qualifiers (Q): J - Detected below PQL but above MDL: Estimated
S - Spike Recovery Outside Acceptance Limits
B - Analyte detected in associated Method Blank
N - See case narrative for explanation

This report shall not be reproduced except in full, without the written approval of BIO-CHEM Laboratories, Inc.

Note: The sample results reported are based on the sample aliquot(s) tested.

BIO-CHEM Laboratories, Inc.

Date: *5/28/2009*

ANALYTICAL REPORT

CLIENT: DeLisle Associates Ltd.
Lab Order: 0905117
Project: Goodwill Industries
Lab Sample ID: 0905117-04A

Project Number: EN08-101
Client Sample ID: EN08-101-69
Collection Date: 5/18/2009
Matrix: SOIL

Analyses	Method Ref.	Result	Q	PQL	Units	DF	Analyst	Date
Volatiles by GC/MS (5035)								
1. 1,1,1-Trichloroethane	SW8260B	< 50		50	µg/Kg-dry	1	GCP	5/26/2009
2. 1,1,2,2-Tetrachloroethane	SW8260B	< 50		50	µg/Kg-dry	1	GCP	5/26/2009
3. 1,1,2-Trichloroethane	SW8260B	< 50		50	µg/Kg-dry	1	GCP	5/26/2009
4. 1,1-Dichloroethane	SW8260B	< 50		50	µg/Kg-dry	1	GCP	5/26/2009
5. 1,1-Dichloroethene	SW8260B	< 50		50	µg/Kg-dry	1	GCP	5/26/2009
6. 1,2,4-Trimethylbenzene	SW8260B	< 50		50	µg/Kg-dry	1	GCP	5/26/2009
7. 1,2-Dibromoethane	SW8260B	< 50		50	µg/Kg-dry	1	GCP	5/26/2009
8. 1,2-Dichlorobenzene	SW8260B	< 50		50	µg/Kg-dry	1	GCP	5/26/2009
9. 1,2-Dichloroethane	SW8260B	< 50		50	µg/Kg-dry	1	GCP	5/26/2009
10. 1,2-Dichloropropane	SW8260B	< 50		50	µg/Kg-dry	1	GCP	5/26/2009
11. 1,3,5-Trimethylbenzene	SW8260B	< 50		50	µg/Kg-dry	1	GCP	5/26/2009
12. 1,3-Dichlorobenzene	SW8260B	< 50		50	µg/Kg-dry	1	GCP	5/26/2009
13. 1,4-Dichlorobenzene	SW8260B	< 50		50	µg/Kg-dry	1	GCP	5/26/2009
14. Benzene	SW8260B	< 50		50	µg/Kg-dry	1	GCP	5/26/2009
15. Bromodichloromethane	SW8260B	< 50		50	µg/Kg-dry	1	GCP	5/26/2009
16. Bromoform	SW8260B	< 50		50	µg/Kg-dry	1	GCP	5/26/2009
17. Bromomethane	SW8260B	< 50		50	µg/Kg-dry	1	GCP	5/26/2009
18. Carbon tetrachloride	SW8260B	< 50		50	µg/Kg-dry	1	GCP	5/26/2009
19. Chlorobenzene	SW8260B	< 50		50	µg/Kg-dry	1	GCP	5/26/2009
20. Chloroethane	SW8260B	< 50		50	µg/Kg-dry	1	GCP	5/26/2009
21. Chloroform	SW8260B	< 50		50	µg/Kg-dry	1	GCP	5/26/2009
22. Chloromethane	SW8260B	< 50		50	µg/Kg-dry	1	GCP	5/26/2009
23. cis-1,2-Dichloroethene	SW8260B	< 50		50	µg/Kg-dry	1	GCP	5/26/2009
24. cis-1,3-Dichloropropene	SW8260B	< 50		50	µg/Kg-dry	1	GCP	5/26/2009
25. Dibromochloromethane	SW8260B	< 50		50	µg/Kg-dry	1	GCP	5/26/2009
26. Ethylbenzene	SW8260B	< 50		50	µg/Kg-dry	1	GCP	5/26/2009
27. m,p-Xylene	SW8260B	< 100		100	µg/Kg-dry	1	GCP	5/26/2009
28. Methyl tert-butyl ether	SW8260B	< 250		250	µg/Kg-dry	1	GCP	5/26/2009
29. Methylene chloride	SW8260B	< 100		100	µg/Kg-dry	1	GCP	5/26/2009
30. o-Xylene	SW8260B	< 50		50	µg/Kg-dry	1	GCP	5/26/2009
31. Tetrachloroethene	SW8260B	< 50		50	µg/Kg-dry	1	GCP	5/26/2009
32. Toluene	SW8260B	< 50		50	µg/Kg-dry	1	GCP	5/26/2009
33. trans-1,2-Dichloroethene	SW8260B	< 50		50	µg/Kg-dry	1	GCP	5/26/2009
34. trans-1,3-Dichloropropene	SW8260B	< 50		50	µg/Kg-dry	1	GCP	5/26/2009
35. Trichloroethene	SW8260B	< 50		50	µg/Kg-dry	1	GCP	5/26/2009
36. Trichlorofluoromethane	SW8260B	< 50		50	µg/Kg-dry	1	GCP	5/26/2009
37. Vinyl chloride	SW8260B	< 40		40	µg/Kg-dry	1	GCP	5/26/2009

Definitions: PQL - Practical Quantitation Limit
DF - Dilution Factor

Qualifiers (Q): J - Detected below PQL but above MDL: Estimated
S - Spike Recovery Outside Acceptance Limits
B - Analyte detected in associated Method Blank
N - See case narrative for explanation

This report shall not be reproduced except in full, without the written approval of BIO-CHEM Laboratories, Inc.

Note: The sample results reported are based on the sample aliquot(s) tested.

BIO-CHEM Laboratories, Inc.

Date: *5/28/2009*

ANALYTICAL REPORT

CLIENT: DeLisle Associates Ltd.
Lab Order: 0905117
Project: Goodwill Industries
Lab Sample ID: 0905117-05A

Project Number: EN08-101
Client Sample ID: EN08-101-70
Collection Date: 5/18/2009
Matrix: SOIL

Analyses	Method Ref.	Result	Q	PQL	Units	DF	Analyst	Date
Volatiles by GC/MS (5035)								
1. 1,1,1-Trichloroethane	SW8260B	< 50		50	µg/Kg-dry	1	GCP	5/26/2009
2. 1,1,2,2-Tetrachloroethane	SW8260B	< 50		50	µg/Kg-dry	1	GCP	5/26/2009
3. 1,1,2-Trichloroethane	SW8260B	< 50		50	µg/Kg-dry	1	GCP	5/26/2009
4. 1,1-Dichloroethane	SW8260B	< 50		50	µg/Kg-dry	1	GCP	5/26/2009
5. 1,1-Dichloroethene	SW8260B	< 50		50	µg/Kg-dry	1	GCP	5/26/2009
6. 1,2,4-Trimethylbenzene	SW8260B	< 50		50	µg/Kg-dry	1	GCP	5/26/2009
7. 1,2-Dibromoethane	SW8260B	< 50		50	µg/Kg-dry	1	GCP	5/26/2009
8. 1,2-Dichlorobenzene	SW8260B	< 50		50	µg/Kg-dry	1	GCP	5/26/2009
9. 1,2-Dichloroethane	SW8260B	< 50		50	µg/Kg-dry	1	GCP	5/26/2009
10. 1,2-Dichloropropane	SW8260B	< 50		50	µg/Kg-dry	1	GCP	5/26/2009
11. 1,3,5-Trimethylbenzene	SW8260B	< 50		50	µg/Kg-dry	1	GCP	5/26/2009
12. 1,3-Dichlorobenzene	SW8260B	< 50		50	µg/Kg-dry	1	GCP	5/26/2009
13. 1,4-Dichlorobenzene	SW8260B	< 50		50	µg/Kg-dry	1	GCP	5/26/2009
14. Benzene	SW8260B	< 50		50	µg/Kg-dry	1	GCP	5/26/2009
15. Bromodichloromethane	SW8260B	< 50		50	µg/Kg-dry	1	GCP	5/26/2009
16. Bromoform	SW8260B	< 50		50	µg/Kg-dry	1	GCP	5/26/2009
17. Bromomethane	SW8260B	< 50		50	µg/Kg-dry	1	GCP	5/26/2009
18. Carbon tetrachloride	SW8260B	< 50		50	µg/Kg-dry	1	GCP	5/26/2009
19. Chlorobenzene	SW8260B	< 50		50	µg/Kg-dry	1	GCP	5/26/2009
20. Chloroethane	SW8260B	< 50		50	µg/Kg-dry	1	GCP	5/26/2009
21. Chloroform	SW8260B	< 50		50	µg/Kg-dry	1	GCP	5/26/2009
22. Chloromethane	SW8260B	< 50		50	µg/Kg-dry	1	GCP	5/26/2009
23. cis-1,2-Dichloroethene	SW8260B	< 50		50	µg/Kg-dry	1	GCP	5/26/2009
24. cis-1,3-Dichloropropene	SW8260B	< 50		50	µg/Kg-dry	1	GCP	5/26/2009
25. Dibromochloromethane	SW8260B	< 50		50	µg/Kg-dry	1	GCP	5/26/2009
26. Ethylbenzene	SW8260B	< 50		50	µg/Kg-dry	1	GCP	5/26/2009
27. m,p-Xylene	SW8260B	< 100		100	µg/Kg-dry	1	GCP	5/26/2009
28. Methyl tert-butyl ether	SW8260B	< 250		250	µg/Kg-dry	1	GCP	5/26/2009
29. Methylene chloride	SW8260B	< 100		100	µg/Kg-dry	1	GCP	5/26/2009
30. o-Xylene	SW8260B	< 50		50	µg/Kg-dry	1	GCP	5/26/2009
31. Tetrachloroethene	SW8260B	110		50	µg/Kg-dry	1	GCP	5/26/2009
32. Toluene	SW8260B	< 50		50	µg/Kg-dry	1	GCP	5/26/2009
33. trans-1,2-Dichloroethene	SW8260B	< 50		50	µg/Kg-dry	1	GCP	5/26/2009
34. trans-1,3-Dichloropropene	SW8260B	< 50		50	µg/Kg-dry	1	GCP	5/26/2009
35. Trichloroethene	SW8260B	< 50		50	µg/Kg-dry	1	GCP	5/26/2009
36. Trichlorofluoromethane	SW8260B	< 50		50	µg/Kg-dry	1	GCP	5/26/2009
37. Vinyl chloride	SW8260B	< 40		40	µg/Kg-dry	1	GCP	5/26/2009

Definitions: PQL - Practical Quantitation Limit
DF - Dilution Factor

Qualifiers (Q): J - Detected below PQL but above MDL: Estimated
S - Spike Recovery Outside Acceptance Limits
B - Analyte detected in associated Method Blank
N - See case narrative for explanation

This report shall not be reproduced except in full, without the written approval of BIO-CHEM Laboratories, Inc.

Note: The sample results reported are based on the sample aliquot(s) tested.

BIO-CHEM Laboratories, Inc.

Date: *5/28/2009*

ANALYTICAL REPORT

CLIENT: DeLisle Associates Ltd.
Lab Order: 0905117
Project: Goodwill Industries
Lab Sample ID: 0905117-06A

Project Number: EN08-101
Client Sample ID: EN08-101-71
Collection Date: 5/19/2009
Matrix: SOIL

Analyses	Method Ref.	Result	Q	PQL	Units	DF	Analyst	Date
Volatiles by GC/MS (5035)								
1. 1,1,1-Trichloroethane	SW8260B	< 50		50	µg/Kg-dry	1	GCP	5/26/2009
2. 1,1,2,2-Tetrachloroethane	SW8260B	< 50		50	µg/Kg-dry	1	GCP	5/26/2009
3. 1,1,2-Trichloroethane	SW8260B	< 50		50	µg/Kg-dry	1	GCP	5/26/2009
4. 1,1-Dichloroethane	SW8260B	< 50		50	µg/Kg-dry	1	GCP	5/26/2009
5. 1,1-Dichloroethene	SW8260B	< 50		50	µg/Kg-dry	1	GCP	5/26/2009
6. 1,2,4-Trimethylbenzene	SW8260B	< 50		50	µg/Kg-dry	1	GCP	5/26/2009
7. 1,2-Dibromoethane	SW8260B	< 50		50	µg/Kg-dry	1	GCP	5/26/2009
8. 1,2-Dichlorobenzene	SW8260B	< 50		50	µg/Kg-dry	1	GCP	5/26/2009
9. 1,2-Dichloroethane	SW8260B	< 50		50	µg/Kg-dry	1	GCP	5/26/2009
10. 1,2-Dichloropropane	SW8260B	< 50		50	µg/Kg-dry	1	GCP	5/26/2009
11. 1,3,5-Trimethylbenzene	SW8260B	< 50		50	µg/Kg-dry	1	GCP	5/26/2009
12. 1,3-Dichlorobenzene	SW8260B	< 50		50	µg/Kg-dry	1	GCP	5/26/2009
13. 1,4-Dichlorobenzene	SW8260B	< 50		50	µg/Kg-dry	1	GCP	5/26/2009
14. Benzene	SW8260B	< 50		50	µg/Kg-dry	1	GCP	5/26/2009
15. Bromodichloromethane	SW8260B	< 50		50	µg/Kg-dry	1	GCP	5/26/2009
16. Bromoform	SW8260B	< 50		50	µg/Kg-dry	1	GCP	5/26/2009
17. Bromomethane	SW8260B	< 50		50	µg/Kg-dry	1	GCP	5/26/2009
18. Carbon tetrachloride	SW8260B	< 50		50	µg/Kg-dry	1	GCP	5/26/2009
19. Chlorobenzene	SW8260B	< 50		50	µg/Kg-dry	1	GCP	5/26/2009
20. Chloroethane	SW8260B	< 50		50	µg/Kg-dry	1	GCP	5/26/2009
21. Chloroform	SW8260B	< 50		50	µg/Kg-dry	1	GCP	5/26/2009
22. Chloromethane	SW8260B	< 50		50	µg/Kg-dry	1	GCP	5/26/2009
23. cis-1,2-Dichloroethene	SW8260B	< 50		50	µg/Kg-dry	1	GCP	5/26/2009
24. cis-1,3-Dichloropropene	SW8260B	< 50		50	µg/Kg-dry	1	GCP	5/26/2009
25. Dibromochloromethane	SW8260B	< 50		50	µg/Kg-dry	1	GCP	5/26/2009
26. Ethylbenzene	SW8260B	< 50		50	µg/Kg-dry	1	GCP	5/26/2009
27. m,p-Xylene	SW8260B	< 100		100	µg/Kg-dry	1	GCP	5/26/2009
28. Methyl tert-butyl ether	SW8260B	< 250		250	µg/Kg-dry	1	GCP	5/26/2009
29. Methylene chloride	SW8260B	< 100		100	µg/Kg-dry	1	GCP	5/26/2009
30. o-Xylene	SW8260B	< 50		50	µg/Kg-dry	1	GCP	5/26/2009
31. Tetrachloroethene	SW8260B	68		50	µg/Kg-dry	1	GCP	5/26/2009
32. Toluene	SW8260B	< 50		50	µg/Kg-dry	1	GCP	5/26/2009
33. trans-1,2-Dichloroethene	SW8260B	< 50		50	µg/Kg-dry	1	GCP	5/26/2009
34. trans-1,3-Dichloropropene	SW8260B	< 50		50	µg/Kg-dry	1	GCP	5/26/2009
35. Trichloroethene	SW8260B	< 50		50	µg/Kg-dry	1	GCP	5/26/2009
36. Trichlorofluoromethane	SW8260B	< 50		50	µg/Kg-dry	1	GCP	5/26/2009
37. Vinyl chloride	SW8260B	< 40		40	µg/Kg-dry	1	GCP	5/26/2009

Definitions: PQL - Practical Quantitation Limit
DF - Dilution Factor

Qualifiers (Q): J - Detected below PQL but above MDL: Estimated
S - Spike Recovery Outside Acceptance Limits
B - Analyte detected in associated Method Blank
N - See case narrative for explanation

This report shall not be reproduced except in full, without the written approval of BIO-CHEM Laboratories, Inc.

Note: The sample results reported are based on the sample aliquot(s) tested.

BIO-CHEM Laboratories, Inc.

Date: *5/28/2009*

ANALYTICAL REPORT

CLIENT: DeLisle Associates Ltd.
Lab Order: 0905117
Project: Goodwill Industries
Lab Sample ID: 0905117-07A

Project Number: EN08-101
Client Sample ID: EN08-101-72
Collection Date: 5/19/2009
Matrix: SOIL

Analyses	Method Ref.	Result	Q	PQL	Units	DF	Analyst	Date
Volatiles by GC/MS (5035)								
1. 1,1,1-Trichloroethane	SW8260B	< 50		50	µg/Kg-dry	1	GCP	5/27/2009
2. 1,1,2,2-Tetrachloroethane	SW8260B	< 50		50	µg/Kg-dry	1	GCP	5/27/2009
3. 1,1,2-Trichloroethane	SW8260B	< 50		50	µg/Kg-dry	1	GCP	5/27/2009
4. 1,1-Dichloroethane	SW8260B	< 50		50	µg/Kg-dry	1	GCP	5/27/2009
5. 1,1-Dichloroethene	SW8260B	< 50		50	µg/Kg-dry	1	GCP	5/27/2009
6. 1,2,4-Trimethylbenzene	SW8260B	< 50		50	µg/Kg-dry	1	GCP	5/27/2009
7. 1,2-Dibromoethane	SW8260B	< 50		50	µg/Kg-dry	1	GCP	5/27/2009
8. 1,2-Dichlorobenzene	SW8260B	< 50		50	µg/Kg-dry	1	GCP	5/27/2009
9. 1,2-Dichloroethane	SW8260B	< 50		50	µg/Kg-dry	1	GCP	5/27/2009
10. 1,2-Dichloropropane	SW8260B	< 50		50	µg/Kg-dry	1	GCP	5/27/2009
11. 1,3,5-Trimethylbenzene	SW8260B	< 50		50	µg/Kg-dry	1	GCP	5/27/2009
12. 1,3-Dichlorobenzene	SW8260B	< 50		50	µg/Kg-dry	1	GCP	5/27/2009
13. 1,4-Dichlorobenzene	SW8260B	< 50		50	µg/Kg-dry	1	GCP	5/27/2009
14. Benzene	SW8260B	< 50		50	µg/Kg-dry	1	GCP	5/27/2009
15. Bromodichloromethane	SW8260B	< 50		50	µg/Kg-dry	1	GCP	5/27/2009
16. Bromoform	SW8260B	< 50		50	µg/Kg-dry	1	GCP	5/27/2009
17. Bromomethane	SW8260B	< 50		50	µg/Kg-dry	1	GCP	5/27/2009
18. Carbon tetrachloride	SW8260B	< 50		50	µg/Kg-dry	1	GCP	5/27/2009
19. Chlorobenzene	SW8260B	< 50		50	µg/Kg-dry	1	GCP	5/27/2009
20. Chloroethane	SW8260B	< 50		50	µg/Kg-dry	1	GCP	5/27/2009
21. Chloroform	SW8260B	< 50		50	µg/Kg-dry	1	GCP	5/27/2009
22. Chloromethane	SW8260B	< 50		50	µg/Kg-dry	1	GCP	5/27/2009
23. cis-1,2-Dichloroethene	SW8260B	< 50		50	µg/Kg-dry	1	GCP	5/27/2009
24. cis-1,3-Dichloropropene	SW8260B	< 50		50	µg/Kg-dry	1	GCP	5/27/2009
25. Dibromochloromethane	SW8260B	< 50		50	µg/Kg-dry	1	GCP	5/27/2009
26. Ethylbenzene	SW8260B	< 50		50	µg/Kg-dry	1	GCP	5/27/2009
27. m,p-Xylene	SW8260B	< 100		100	µg/Kg-dry	1	GCP	5/27/2009
28. Methyl tert-butyl ether	SW8260B	< 250		250	µg/Kg-dry	1	GCP	5/27/2009
29. Methylene chloride	SW8260B	< 100		100	µg/Kg-dry	1	GCP	5/27/2009
30. o-Xylene	SW8260B	< 50		50	µg/Kg-dry	1	GCP	5/27/2009
31. Tetrachloroethene	SW8260B	< 50		50	µg/Kg-dry	1	GCP	5/27/2009
32. Toluene	SW8260B	< 50		50	µg/Kg-dry	1	GCP	5/27/2009
33. trans-1,2-Dichloroethene	SW8260B	< 50		50	µg/Kg-dry	1	GCP	5/27/2009
34. trans-1,3-Dichloropropene	SW8260B	< 50		50	µg/Kg-dry	1	GCP	5/27/2009
35. Trichloroethene	SW8260B	< 50		50	µg/Kg-dry	1	GCP	5/27/2009
36. Trichlorofluoromethane	SW8260B	< 50		50	µg/Kg-dry	1	GCP	5/27/2009
37. Vinyl chloride	SW8260B	< 40		40	µg/Kg-dry	1	GCP	5/27/2009

Definitions: PQL - Practical Quantitation Limit
DF - Dilution Factor

Qualifiers (Q): J - Detected below PQL but above MDL: Estimated
S - Spike Recovery Outside Acceptance Limits
B - Analyte detected in associated Method Blank
N - See case narrative for explanation

This report shall not be reproduced except in full, without the written approval of BIO-CHEM Laboratories, Inc.

Note: The sample results reported are based on the sample aliquot(s) tested.

BIO-CHEM Laboratories, Inc.

Date: *5/28/2009*

ANALYTICAL REPORT

CLIENT: DeLisle Associates Ltd.
Lab Order: 0905117
Project: Goodwill Industries
Lab Sample ID: 0905117-08A

Project Number: EN08-101
Client Sample ID: EN08-101-73
Collection Date: 5/19/2009
Matrix: SOIL

Analyses	Method Ref.	Result	Q	PQL	Units	DF	Analyst	Date
Volatiles by GC/MS (5035)								
1. 1,1,1-Trichloroethane	SW8260B	< 50		50	µg/Kg-dry	1	GCP	5/27/2009
2. 1,1,2,2-Tetrachloroethane	SW8260B	< 50		50	µg/Kg-dry	1	GCP	5/27/2009
3. 1,1,2-Trichloroethane	SW8260B	< 50		50	µg/Kg-dry	1	GCP	5/27/2009
4. 1,1-Dichloroethane	SW8260B	< 50		50	µg/Kg-dry	1	GCP	5/27/2009
5. 1,1-Dichloroethene	SW8260B	< 50		50	µg/Kg-dry	1	GCP	5/27/2009
6. 1,2,4-Trimethylbenzene	SW8260B	< 50		50	µg/Kg-dry	1	GCP	5/27/2009
7. 1,2-Dibromoethane	SW8260B	< 50		50	µg/Kg-dry	1	GCP	5/27/2009
8. 1,2-Dichlorobenzene	SW8260B	< 50		50	µg/Kg-dry	1	GCP	5/27/2009
9. 1,2-Dichloroethane	SW8260B	< 50		50	µg/Kg-dry	1	GCP	5/27/2009
10. 1,2-Dichloropropane	SW8260B	< 50		50	µg/Kg-dry	1	GCP	5/27/2009
11. 1,3,5-Trimethylbenzene	SW8260B	< 50		50	µg/Kg-dry	1	GCP	5/27/2009
12. 1,3-Dichlorobenzene	SW8260B	< 50		50	µg/Kg-dry	1	GCP	5/27/2009
13. 1,4-Dichlorobenzene	SW8260B	< 50		50	µg/Kg-dry	1	GCP	5/27/2009
14. Benzene	SW8260B	< 50		50	µg/Kg-dry	1	GCP	5/27/2009
15. Bromodichloromethane	SW8260B	< 50		50	µg/Kg-dry	1	GCP	5/27/2009
16. Bromoform	SW8260B	< 50		50	µg/Kg-dry	1	GCP	5/27/2009
17. Bromomethane	SW8260B	< 50		50	µg/Kg-dry	1	GCP	5/27/2009
18. Carbon tetrachloride	SW8260B	< 50		50	µg/Kg-dry	1	GCP	5/27/2009
19. Chlorobenzene	SW8260B	< 50		50	µg/Kg-dry	1	GCP	5/27/2009
20. Chloroethane	SW8260B	< 50		50	µg/Kg-dry	1	GCP	5/27/2009
21. Chloroform	SW8260B	< 50		50	µg/Kg-dry	1	GCP	5/27/2009
22. Chloromethane	SW8260B	< 50		50	µg/Kg-dry	1	GCP	5/27/2009
23. cis-1,2-Dichloroethene	SW8260B	< 50		50	µg/Kg-dry	1	GCP	5/27/2009
24. cis-1,3-Dichloropropene	SW8260B	< 50		50	µg/Kg-dry	1	GCP	5/27/2009
25. Dibromochloromethane	SW8260B	< 50		50	µg/Kg-dry	1	GCP	5/27/2009
26. Ethylbenzene	SW8260B	< 50		50	µg/Kg-dry	1	GCP	5/27/2009
27. m,p-Xylene	SW8260B	< 100		100	µg/Kg-dry	1	GCP	5/27/2009
28. Methyl tert-butyl ether	SW8260B	< 250		250	µg/Kg-dry	1	GCP	5/27/2009
29. Methylene chloride	SW8260B	< 100		100	µg/Kg-dry	1	GCP	5/27/2009
30. o-Xylene	SW8260B	< 50		50	µg/Kg-dry	1	GCP	5/27/2009
31. Tetrachloroethene	SW8260B	62		50	µg/Kg-dry	1	GCP	5/27/2009
32. Toluene	SW8260B	< 50		50	µg/Kg-dry	1	GCP	5/27/2009
33. trans-1,2-Dichloroethene	SW8260B	< 50		50	µg/Kg-dry	1	GCP	5/27/2009
34. trans-1,3-Dichloropropene	SW8260B	< 50		50	µg/Kg-dry	1	GCP	5/27/2009
35. Trichloroethene	SW8260B	< 50		50	µg/Kg-dry	1	GCP	5/27/2009
36. Trichlorofluoromethane	SW8260B	< 50		50	µg/Kg-dry	1	GCP	5/27/2009
37. Vinyl chloride	SW8260B	< 40		40	µg/Kg-dry	1	GCP	5/27/2009

Definitions: PQL - Practical Quantitation Limit
DF - Dilution Factor

Qualifiers (Q): J - Detected below PQL but above MDL: Estimated
S - Spike Recovery Outside Acceptance Limits
B - Analyte detected in associated Method Blank
N - See case narrative for explanation

This report shall not be reproduced except in full, without the written approval of BIO-CHEM Laboratories, Inc.

Note: The sample results reported are based on the sample aliquot(s) tested.

BIO-CHEM Laboratories, Inc.

Date: *5/28/2009*

ANALYTICAL REPORT

CLIENT: DeLisle Associates Ltd.
Lab Order: 0905117
Project: Goodwill Industries
Lab Sample ID: 0905117-09A

Project Number: EN08-101
Client Sample ID: EN08-101-74
Collection Date: 5/19/2009
Matrix: SOIL

Analyses	Method Ref.	Result	Q	PQL	Units	DF	Analyst	Date
Volatiles by GC/MS (5035)								
1. 1,1,1-Trichloroethane	SW8260B	< 50		50	µg/Kg-dry	1	GCP	5/27/2009
2. 1,1,2,2-Tetrachloroethane	SW8260B	< 50		50	µg/Kg-dry	1	GCP	5/27/2009
3. 1,1,2-Trichloroethane	SW8260B	< 50		50	µg/Kg-dry	1	GCP	5/27/2009
4. 1,1-Dichloroethane	SW8260B	< 50		50	µg/Kg-dry	1	GCP	5/27/2009
5. 1,1-Dichloroethene	SW8260B	< 50		50	µg/Kg-dry	1	GCP	5/27/2009
6. 1,2,4-Trimethylbenzene	SW8260B	< 50		50	µg/Kg-dry	1	GCP	5/27/2009
7. 1,2-Dibromoethane	SW8260B	< 50		50	µg/Kg-dry	1	GCP	5/27/2009
8. 1,2-Dichlorobenzene	SW8260B	< 50		50	µg/Kg-dry	1	GCP	5/27/2009
9. 1,2-Dichloroethane	SW8260B	< 50		50	µg/Kg-dry	1	GCP	5/27/2009
10. 1,2-Dichloropropane	SW8260B	< 50		50	µg/Kg-dry	1	GCP	5/27/2009
11. 1,3,5-Trimethylbenzene	SW8260B	< 50		50	µg/Kg-dry	1	GCP	5/27/2009
12. 1,3-Dichlorobenzene	SW8260B	< 50		50	µg/Kg-dry	1	GCP	5/27/2009
13. 1,4-Dichlorobenzene	SW8260B	< 50		50	µg/Kg-dry	1	GCP	5/27/2009
14. Benzene	SW8260B	< 50		50	µg/Kg-dry	1	GCP	5/27/2009
15. Bromodichloromethane	SW8260B	< 50		50	µg/Kg-dry	1	GCP	5/27/2009
16. Bromoform	SW8260B	< 50		50	µg/Kg-dry	1	GCP	5/27/2009
17. Bromomethane	SW8260B	< 50		50	µg/Kg-dry	1	GCP	5/27/2009
18. Carbon tetrachloride	SW8260B	< 50		50	µg/Kg-dry	1	GCP	5/27/2009
19. Chlorobenzene	SW8260B	< 50		50	µg/Kg-dry	1	GCP	5/27/2009
20. Chloroethane	SW8260B	< 50		50	µg/Kg-dry	1	GCP	5/27/2009
21. Chloroform	SW8260B	< 50		50	µg/Kg-dry	1	GCP	5/27/2009
22. Chloromethane	SW8260B	< 50		50	µg/Kg-dry	1	GCP	5/27/2009
23. cis-1,2-Dichloroethene	SW8260B	< 50		50	µg/Kg-dry	1	GCP	5/27/2009
24. cis-1,3-Dichloropropene	SW8260B	< 50		50	µg/Kg-dry	1	GCP	5/27/2009
25. Dibromochloromethane	SW8260B	< 50		50	µg/Kg-dry	1	GCP	5/27/2009
26. Ethylbenzene	SW8260B	< 50		50	µg/Kg-dry	1	GCP	5/27/2009
27. m,p-Xylene	SW8260B	< 100		100	µg/Kg-dry	1	GCP	5/27/2009
28. Methyl tert-butyl ether	SW8260B	< 250		250	µg/Kg-dry	1	GCP	5/27/2009
29. Methylene chloride	SW8260B	< 100		100	µg/Kg-dry	1	GCP	5/27/2009
30. o-Xylene	SW8260B	< 50		50	µg/Kg-dry	1	GCP	5/27/2009
31. Tetrachloroethene	SW8260B	550		50	µg/Kg-dry	1	GCP	5/27/2009
32. Toluene	SW8260B	< 50		50	µg/Kg-dry	1	GCP	5/27/2009
33. trans-1,2-Dichloroethene	SW8260B	< 50		50	µg/Kg-dry	1	GCP	5/27/2009
34. trans-1,3-Dichloropropene	SW8260B	< 50		50	µg/Kg-dry	1	GCP	5/27/2009
35. Trichloroethene	SW8260B	< 50		50	µg/Kg-dry	1	GCP	5/27/2009
36. Trichlorofluoromethane	SW8260B	< 50		50	µg/Kg-dry	1	GCP	5/27/2009
37. Vinyl chloride	SW8260B	< 40		40	µg/Kg-dry	1	GCP	5/27/2009

Definitions: PQL - Practical Quantitation Limit
DF - Dilution Factor

Qualifiers (Q): J - Detected below PQL but above MDL: Estimated
S - Spike Recovery Outside Acceptance Limits
B - Analyte detected in associated Method Blank
N - See case narrative for explanation

This report shall not be reproduced except in full, without the written approval of BIO-CHEM Laboratories, Inc.

Note: The sample results reported are based on the sample aliquot(s) tested.

BIO-CHEM Laboratories, Inc.

Date: *5/28/2009*

ANALYTICAL REPORT

CLIENT: DeLisle Associates Ltd.
Lab Order: 0905117
Project: Goodwill Industries
Lab Sample ID: 0905117-10A

Project Number: EN08-101
Client Sample ID: EN08-101-75
Collection Date: 5/19/2009
Matrix: SOIL

Analyses	Method Ref.	Result	Q	PQL	Units	DF	Analyst	Date
Volatiles by GC/MS (5035)								
1. 1,1,1-Trichloroethane	SW8260B	< 50		50	µg/Kg-dry	1	GCP	5/27/2009
2. 1,1,2,2-Tetrachloroethane	SW8260B	< 50		50	µg/Kg-dry	1	GCP	5/27/2009
3. 1,1,2-Trichloroethane	SW8260B	< 50		50	µg/Kg-dry	1	GCP	5/27/2009
4. 1,1-Dichloroethane	SW8260B	< 50		50	µg/Kg-dry	1	GCP	5/27/2009
5. 1,1-Dichloroethene	SW8260B	< 50		50	µg/Kg-dry	1	GCP	5/27/2009
6. 1,2,4-Trimethylbenzene	SW8260B	< 50		50	µg/Kg-dry	1	GCP	5/27/2009
7. 1,2-Dibromoethane	SW8260B	< 50		50	µg/Kg-dry	1	GCP	5/27/2009
8. 1,2-Dichlorobenzene	SW8260B	< 50		50	µg/Kg-dry	1	GCP	5/27/2009
9. 1,2-Dichloroethane	SW8260B	< 50		50	µg/Kg-dry	1	GCP	5/27/2009
10. 1,2-Dichloropropane	SW8260B	< 50		50	µg/Kg-dry	1	GCP	5/27/2009
11. 1,3,5-Trimethylbenzene	SW8260B	< 50		50	µg/Kg-dry	1	GCP	5/27/2009
12. 1,3-Dichlorobenzene	SW8260B	< 50		50	µg/Kg-dry	1	GCP	5/27/2009
13. 1,4-Dichlorobenzene	SW8260B	< 50		50	µg/Kg-dry	1	GCP	5/27/2009
14. Benzene	SW8260B	< 50		50	µg/Kg-dry	1	GCP	5/27/2009
15. Bromodichloromethane	SW8260B	< 50		50	µg/Kg-dry	1	GCP	5/27/2009
16. Bromoform	SW8260B	< 50		50	µg/Kg-dry	1	GCP	5/27/2009
17. Bromomethane	SW8260B	< 50		50	µg/Kg-dry	1	GCP	5/27/2009
18. Carbon tetrachloride	SW8260B	< 50		50	µg/Kg-dry	1	GCP	5/27/2009
19. Chlorobenzene	SW8260B	< 50		50	µg/Kg-dry	1	GCP	5/27/2009
20. Chloroethane	SW8260B	< 50		50	µg/Kg-dry	1	GCP	5/27/2009
21. Chloroform	SW8260B	< 50		50	µg/Kg-dry	1	GCP	5/27/2009
22. Chloromethane	SW8260B	< 50		50	µg/Kg-dry	1	GCP	5/27/2009
23. cis-1,2-Dichloroethene	SW8260B	< 50		50	µg/Kg-dry	1	GCP	5/27/2009
24. cis-1,3-Dichloropropene	SW8260B	< 50		50	µg/Kg-dry	1	GCP	5/27/2009
25. Dibromochloromethane	SW8260B	< 50		50	µg/Kg-dry	1	GCP	5/27/2009
26. Ethylbenzene	SW8260B	< 50		50	µg/Kg-dry	1	GCP	5/27/2009
27. m,p-Xylene	SW8260B	< 100		100	µg/Kg-dry	1	GCP	5/27/2009
28. Methyl tert-butyl ether	SW8260B	< 250		250	µg/Kg-dry	1	GCP	5/27/2009
29. Methylene chloride	SW8260B	< 100		100	µg/Kg-dry	1	GCP	5/27/2009
30. o-Xylene	SW8260B	< 50		50	µg/Kg-dry	1	GCP	5/27/2009
31. Tetrachloroethene	SW8260B	1,300		50	µg/Kg-dry	1	GCP	5/27/2009
32. Toluene	SW8260B	< 50		50	µg/Kg-dry	1	GCP	5/27/2009
33. trans-1,2-Dichloroethene	SW8260B	< 50		50	µg/Kg-dry	1	GCP	5/27/2009
34. trans-1,3-Dichloropropene	SW8260B	< 50		50	µg/Kg-dry	1	GCP	5/27/2009
35. Trichloroethene	SW8260B	< 50		50	µg/Kg-dry	1	GCP	5/27/2009
36. Trichlorofluoromethane	SW8260B	< 50		50	µg/Kg-dry	1	GCP	5/27/2009
37. Vinyl chloride	SW8260B	< 40		40	µg/Kg-dry	1	GCP	5/27/2009

Definitions: PQL - Practical Quantitation Limit
DF - Dilution Factor

Qualifiers (Q): J - Detected below PQL but above MDL: Estimated
S - Spike Recovery Outside Acceptance Limits
B - Analyte detected in associated Method Blank
N - See case narrative for explanation

This report shall not be reproduced except in full, without the written approval of BIO-CHEM Laboratories, Inc.

Note: The sample results reported are based on the sample aliquot(s) tested.

BIO-CHEM Laboratories, Inc.

Date: *5/28/2009*

ANALYTICAL REPORT

CLIENT: DeLisle Associates Ltd.
Lab Order: 0905117
Project: Goodwill Industries
Lab Sample ID: 0905117-11A

Project Number: EN08-101
Client Sample ID: EN08-101-76
Collection Date: 5/19/2009
Matrix: SOIL

Analyses	Method Ref.	Result	Q	PQL	Units	DF	Analyst	Date
Volatiles by GC/MS (5035)								
1. 1,1,1-Trichloroethane	SW8260B	< 50		50	µg/Kg-dry	1	GCP	5/27/2009
2. 1,1,2,2-Tetrachloroethane	SW8260B	< 50		50	µg/Kg-dry	1	GCP	5/27/2009
3. 1,1,2-Trichloroethane	SW8260B	< 50		50	µg/Kg-dry	1	GCP	5/27/2009
4. 1,1-Dichloroethane	SW8260B	< 50		50	µg/Kg-dry	1	GCP	5/27/2009
5. 1,1-Dichloroethene	SW8260B	< 50		50	µg/Kg-dry	1	GCP	5/27/2009
6. 1,2,4-Trimethylbenzene	SW8260B	63		50	µg/Kg-dry	1	GCP	5/27/2009
7. 1,2-Dibromoethane	SW8260B	< 50		50	µg/Kg-dry	1	GCP	5/27/2009
8. 1,2-Dichlorobenzene	SW8260B	< 50		50	µg/Kg-dry	1	GCP	5/27/2009
9. 1,2-Dichloroethane	SW8260B	< 50		50	µg/Kg-dry	1	GCP	5/27/2009
10. 1,2-Dichloropropane	SW8260B	< 50		50	µg/Kg-dry	1	GCP	5/27/2009
11. 1,3,5-Trimethylbenzene	SW8260B	< 50		50	µg/Kg-dry	1	GCP	5/27/2009
12. 1,3-Dichlorobenzene	SW8260B	< 50		50	µg/Kg-dry	1	GCP	5/27/2009
13. 1,4-Dichlorobenzene	SW8260B	< 50		50	µg/Kg-dry	1	GCP	5/27/2009
14. Benzene	SW8260B	< 50		50	µg/Kg-dry	1	GCP	5/27/2009
15. Bromodichloromethane	SW8260B	< 50		50	µg/Kg-dry	1	GCP	5/27/2009
16. Bromoform	SW8260B	< 50		50	µg/Kg-dry	1	GCP	5/27/2009
17. Bromomethane	SW8260B	< 50		50	µg/Kg-dry	1	GCP	5/27/2009
18. Carbon tetrachloride	SW8260B	< 50		50	µg/Kg-dry	1	GCP	5/27/2009
19. Chlorobenzene	SW8260B	< 50		50	µg/Kg-dry	1	GCP	5/27/2009
20. Chloroethane	SW8260B	< 50		50	µg/Kg-dry	1	GCP	5/27/2009
21. Chloroform	SW8260B	< 50		50	µg/Kg-dry	1	GCP	5/27/2009
22. Chloromethane	SW8260B	< 50		50	µg/Kg-dry	1	GCP	5/27/2009
23. cis-1,2-Dichloroethene	SW8260B	< 50		50	µg/Kg-dry	1	GCP	5/27/2009
24. cis-1,3-Dichloropropene	SW8260B	< 50		50	µg/Kg-dry	1	GCP	5/27/2009
25. Dibromochloromethane	SW8260B	< 50		50	µg/Kg-dry	1	GCP	5/27/2009
26. Ethylbenzene	SW8260B	< 50		50	µg/Kg-dry	1	GCP	5/27/2009
27. m,p-Xylene	SW8260B	< 100		100	µg/Kg-dry	1	GCP	5/27/2009
28. Methyl tert-butyl ether	SW8260B	< 250		250	µg/Kg-dry	1	GCP	5/27/2009
29. Methylene chloride	SW8260B	< 100		100	µg/Kg-dry	1	GCP	5/27/2009
30. o-Xylene	SW8260B	< 50		50	µg/Kg-dry	1	GCP	5/27/2009
31. Tetrachloroethene	SW8260B	150		50	µg/Kg-dry	1	GCP	5/27/2009
32. Toluene	SW8260B	< 50		50	µg/Kg-dry	1	GCP	5/27/2009
33. trans-1,2-Dichloroethene	SW8260B	< 50		50	µg/Kg-dry	1	GCP	5/27/2009
34. trans-1,3-Dichloropropene	SW8260B	< 50		50	µg/Kg-dry	1	GCP	5/27/2009
35. Trichloroethene	SW8260B	< 50		50	µg/Kg-dry	1	GCP	5/27/2009
36. Trichlorofluoromethane	SW8260B	< 50		50	µg/Kg-dry	1	GCP	5/27/2009
37. Vinyl chloride	SW8260B	< 40		40	µg/Kg-dry	1	GCP	5/27/2009

Definitions: PQL - Practical Quantitation Limit
DF - Dilution Factor

Qualifiers (Q): J - Detected below PQL but above MDL: Estimated
S - Spike Recovery Outside Acceptance Limits
B - Analyte detected in associated Method Blank
N - See case narrative for explanation

This report shall not be reproduced except in full, without the written approval of BIO-CHEM Laboratories, Inc.

Note: The sample results reported are based on the sample aliquot(s) tested.

BIO-CHEM Laboratories, Inc.

Date: *5/28/2009*

ANALYTICAL REPORT

CLIENT: DeLisle Associates Ltd.
Lab Order: 0905117
Project: Goodwill Industries
Lab Sample ID: 0905117-12A

Project Number: EN08-101
Client Sample ID: EN08-101-77
Collection Date: 5/19/2009
Matrix: SOIL

Analyses	Method Ref.	Result	Q	PQL	Units	DF	Analyst	Date
Volatiles by GC/MS (5035)								
1. 1,1,1-Trichloroethane	SW8260B	< 50		50	µg/Kg-dry	1	GCP	5/28/2009
2. 1,1,2,2-Tetrachloroethane	SW8260B	< 50		50	µg/Kg-dry	1	GCP	5/28/2009
3. 1,1,2-Trichloroethane	SW8260B	< 50		50	µg/Kg-dry	1	GCP	5/28/2009
4. 1,1-Dichloroethane	SW8260B	< 50		50	µg/Kg-dry	1	GCP	5/28/2009
5. 1,1-Dichloroethene	SW8260B	< 50		50	µg/Kg-dry	1	GCP	5/28/2009
6. 1,2,4-Trimethylbenzene	SW8260B	< 50		50	µg/Kg-dry	1	GCP	5/28/2009
7. 1,2-Dibromoethane	SW8260B	< 50		50	µg/Kg-dry	1	GCP	5/28/2009
8. 1,2-Dichlorobenzene	SW8260B	< 50		50	µg/Kg-dry	1	GCP	5/28/2009
9. 1,2-Dichloroethane	SW8260B	< 50		50	µg/Kg-dry	1	GCP	5/28/2009
10. 1,2-Dichloropropane	SW8260B	< 50		50	µg/Kg-dry	1	GCP	5/28/2009
11. 1,3,5-Trimethylbenzene	SW8260B	< 50		50	µg/Kg-dry	1	GCP	5/28/2009
12. 1,3-Dichlorobenzene	SW8260B	< 50		50	µg/Kg-dry	1	GCP	5/28/2009
13. 1,4-Dichlorobenzene	SW8260B	< 50		50	µg/Kg-dry	1	GCP	5/28/2009
14. Benzene	SW8260B	< 50		50	µg/Kg-dry	1	GCP	5/28/2009
15. Bromodichloromethane	SW8260B	< 50		50	µg/Kg-dry	1	GCP	5/28/2009
16. Bromoform	SW8260B	< 50		50	µg/Kg-dry	1	GCP	5/28/2009
17. Bromomethane	SW8260B	< 50		50	µg/Kg-dry	1	GCP	5/28/2009
18. Carbon tetrachloride	SW8260B	< 50		50	µg/Kg-dry	1	GCP	5/28/2009
19. Chlorobenzene	SW8260B	< 50		50	µg/Kg-dry	1	GCP	5/28/2009
20. Chloroethane	SW8260B	< 50		50	µg/Kg-dry	1	GCP	5/28/2009
21. Chloroform	SW8260B	< 50		50	µg/Kg-dry	1	GCP	5/28/2009
22. Chloromethane	SW8260B	< 50		50	µg/Kg-dry	1	GCP	5/28/2009
23. cis-1,2-Dichloroethene	SW8260B	< 50		50	µg/Kg-dry	1	GCP	5/28/2009
24. cis-1,3-Dichloropropene	SW8260B	< 50		50	µg/Kg-dry	1	GCP	5/28/2009
25. Dibromochloromethane	SW8260B	< 50		50	µg/Kg-dry	1	GCP	5/28/2009
26. Ethylbenzene	SW8260B	< 50		50	µg/Kg-dry	1	GCP	5/28/2009
27. m,p-Xylene	SW8260B	< 100		100	µg/Kg-dry	1	GCP	5/28/2009
28. Methyl tert-butyl ether	SW8260B	< 250		250	µg/Kg-dry	1	GCP	5/28/2009
29. Methylene chloride	SW8260B	< 100		100	µg/Kg-dry	1	GCP	5/28/2009
30. o-Xylene	SW8260B	< 50		50	µg/Kg-dry	1	GCP	5/28/2009
31. Tetrachloroethene	SW8260B	< 50		50	µg/Kg-dry	1	GCP	5/28/2009
32. Toluene	SW8260B	< 50		50	µg/Kg-dry	1	GCP	5/28/2009
33. trans-1,2-Dichloroethene	SW8260B	< 50		50	µg/Kg-dry	1	GCP	5/28/2009
34. trans-1,3-Dichloropropene	SW8260B	< 50		50	µg/Kg-dry	1	GCP	5/28/2009
35. Trichloroethene	SW8260B	< 50		50	µg/Kg-dry	1	GCP	5/28/2009
36. Trichlorofluoromethane	SW8260B	< 50		50	µg/Kg-dry	1	GCP	5/28/2009
37. Vinyl chloride	SW8260B	< 40		40	µg/Kg-dry	1	GCP	5/28/2009

Definitions: PQL - Practical Quantitation Limit
DF - Dilution Factor

Qualifiers (Q): J - Detected below PQL but above MDL: Estimated
S - Spike Recovery Outside Acceptance Limits
B - Analyte detected in associated Method Blank
N - See case narrative for explanation

This report shall not be reproduced except in full, without the written approval of BIO-CHEM Laboratories, Inc.

Note: The sample results reported are based on the sample aliquot(s) tested.

BIO-CHEM Laboratories, Inc.

Lab Order: 0905117
Client: DeLisle Associates Ltd.
Project: Goodwill Industries

ANALYTICAL DETAIL REPORT

Sample ID	Client Sample ID	Matrix	Test Name	Date Sampled	TCLP/SPLP Date	Prep Date	QC Batch	Analysis Date	Analytical Batch
0905117-01A	EN08-101-66	Soil	Volatiles by GC/MS (5035)	5/18/2009		5/20/2009	28334	5/21/2009	GCMS_Z_090521B
0905117-02A	EN08-101-67	Soil	Volatiles by GC/MS (5035)	5/18/2009		5/20/2009	28334	5/21/2009	GCMS_Z_090521B
0905117-03A	EN08-101-68	Soil	Volatiles by GC/MS (5035)	5/18/2009		5/20/2009	28334	5/21/2009	GCMS_Z_090521B
0905117-04A	EN08-101-69	Soil	Volatiles by GC/MS (5035)	5/18/2009		5/20/2009	28356	5/26/2009	GCMS_Y_090526B
0905117-05A	EN08-101-70	Soil	Volatiles by GC/MS (5035)	5/18/2009		5/20/2009	28356	5/26/2009	GCMS_Y_090526B
0905117-06A	EN08-101-71	Soil	Volatiles by GC/MS (5035)	5/19/2009		5/20/2009	28356	5/26/2009	GCMS_Y_090526B
0905117-07A	EN08-101-72	Soil	Volatiles by GC/MS (5035)	5/19/2009		5/20/2009	28356	5/27/2009	GCMS_Y_090526B
0905117-08A	EN08-101-73	Soil	Volatiles by GC/MS (5035)	5/19/2009		5/20/2009	28356	5/27/2009	GCMS_Y_090526B
0905117-09A	EN08-101-74	Soil	Volatiles by GC/MS (5035)	5/19/2009		5/20/2009	28356	5/27/2009	GCMS_Y_090526B
0905117-10A	EN08-101-75	Soil	Volatiles by GC/MS (5035)	5/19/2009		5/20/2009	28356	5/27/2009	GCMS_Y_090526B
0905117-11A	EN08-101-76	Soil	Volatiles by GC/MS (5035)	5/19/2009		5/20/2009	28356	5/27/2009	GCMS_Y_090526B
0905117-12A	EN08-101-77	Soil	Volatiles by GC/MS (5035)	5/19/2009		5/28/2009	28369	5/28/2009	GCMS_Q_090528A

KAR *Laboratories, Inc.*

4425 Manchester Road
Kalamazoo, MI 49001
Phone 269 381-9666
Fax 269 381-9698
www.karlabs.com

DeLisle Associates, LTD.
5050 Sprinkle Road
Portage, MI 49002

Attn : ***Mr. Andy Graham***

KAR Project No. :	***091921***
Date Reported :	***05/28/09***
Date Activated :	***05/18/09***
Date Due :	***06/02/09***
Date Validated :	***05/21/09***

Project Description : ***Analysis of three air samples from Goodwill Industries (EN08-101).***

Dear Client,

Your laboratory data is presented to you in this report. Unless otherwise stated under the "Comments" heading, all tests were performed within the maximum allowable holding times, have met or exceeded QC requirements and the result represents the sample as it was received.

If you wish to contact us about this work please mention KAR Project No. 091921. To arrange additional sampling or testing please contact our Client Services Department. If you have any questions regarding quality assurance please contact us.

Thank you for the opportunity to serve you. Please do not hesitate to call if we can provide additional assistance.

Respectfully submitted,

David R. Alkema
Laboratory Manager

KAR Laboratories, Inc. maintains Full Certification status for Bacteriology, Inorganics, Regulated Organics and Synthetic Organics through USEPA, Michigan Department of Public Health and Indiana State Department of Health. This report may only be reproduced in full and not without the written consent of **DeLisle Associates, LTD.**.

The information contained in this electronic mail is intended only for the use of the above-named recipient. If the reader of this message is not the intended recipient (or an agent responsible for delivering it to the intended recipient) then you have received this document in error and any review, distribution or copying of this message is strictly prohibited. If you have received this communication in error please accept our apologies, destroy all pages and tell us immediately at (269) 381-9666.

LABORATORY DETAIL REPORT

KAR Project No. : ***091921***

Client: ***DeLisle Associates, LTD.***

Date Reported : ***05/28/09***

Project Description : ***Analysis of three air samples from Goodwill Industries (EN08-101).***

Sample ID : ***"EN08-101-SVE 63"***

Sampled By : ***AJG of DeLisle Associates, LTD.***
Sample Date : ***05/18/09***
Sample Time : ***1000***

Date Received : ***05/18/09***
Sample Type : ***air***
KAR Sample No. : ***091921-01***

Test	Result	Units of Measure	Method	Analyzed	Analyst	Comments
MDNR Scan 1	See below		EPA 8260	05/19/09	JAR	
Prep, VOA	Completed		EPA 5030	05/19/09	JAR	
1,1,1-Trichloroethane	<1	milligrams/cu. meter	EPA 8260	05/19/09	JAR	
1,1,2,2-Tetrachloroethane	<1	milligrams/cu. meter	EPA 8260	05/19/09	JAR	
1,1,2-Trichloroethane	<1	milligrams/cu. meter	EPA 8260	05/19/09	JAR	
1,1-Dichloroethane	<1	milligrams/cu. meter	EPA 8260	05/19/09	JAR	
1,1-Dichloroethene	<1	milligrams/cu. meter	EPA 8260	05/19/09	JAR	
1,2-Dichloroethane	<1	milligrams/cu. meter	EPA 8260	05/19/09	JAR	
1,2-Dichloropropane	<1	milligrams/cu. meter	EPA 8260	05/19/09	JAR	
Bromodichloromethane	<1	milligrams/cu. meter	EPA 8260	05/19/09	JAR	
Bromoform	<1	milligrams/cu. meter	EPA 8260	05/19/09	JAR	
Bromomethane	<1	milligrams/cu. meter	EPA 8260	05/19/09	JAR	
Carbon tetrachloride	<1	milligrams/cu. meter	EPA 8260	05/19/09	JAR	
Chlorobenzene	<1	milligrams/cu. meter	EPA 8260	05/19/09	JAR	
Chloroethane	<1	milligrams/cu. meter	EPA 8260	05/19/09	JAR	
Chloroform	<1	milligrams/cu. meter	EPA 8260	05/19/09	JAR	
Chloromethane	<1	milligrams/cu. meter	EPA 8260	05/19/09	JAR	
Cis-1,2-Dichloroethene	<1	milligrams/cu. meter	EPA 8260	05/19/09	JAR	
Cis-1,3-Dichloropropene	<1	milligrams/cu. meter	EPA 8260	05/19/09	JAR	
Dibromochloromethane	<1	milligrams/cu. meter	EPA 8260	05/19/09	JAR	
Methylene chloride	<1	milligrams/cu. meter	EPA 8260	05/19/09	JAR	
Tetrachloroethene	20	milligrams/cu. meter	EPA 8260	05/19/09	JAR	
Trans-1,2-Dichloroethene	<1	milligrams/cu. meter	EPA 8260	05/19/09	JAR	
Trans-1,3-Dichloropropene	<1	milligrams/cu. meter	EPA 8260	05/19/09	JAR	
Trichloroethene	<1	milligrams/cu. meter	EPA 8260	05/19/09	JAR	
Trichlorofluoromethane	<1	milligrams/cu. meter	EPA 8260	05/19/09	JAR	
Vinyl chloride	<1	milligrams/cu. meter	EPA 8260	05/19/09	JAR	

LABORATORY DETAIL REPORT

KAR Project No. : ***091921***

Client: ***DeLisle Associates, LTD.***

Date Reported : ***05/28/09***

Project Description : ***Analysis of three air samples from Goodwill Industries (EN08-101).***

Sample ID : ***"EN08-101-SVE 64C1"***

Sampled By : ***AJG of DeLisle Associates, LTD.***
Sample Date : ***05/18/09***
Sample Time : ***1005***

Date Received : ***05/18/09***
Sample Type : ***air***
KAR Sample No. : ***091921-02***

Test	Result	Units of Measure	Method	Analyzed	Analyst	Comments
MDNR Scan 1	See below		EPA 8260	05/19/09	JAR	
Prep, VOA	Completed		EPA 5030	05/19/09	JAR	
1,1,1-Trichloroethane	<1	milligrams/cu. meter	EPA 8260	05/19/09	JAR	
1,1,2,2-Tetrachloroethane	<1	milligrams/cu. meter	EPA 8260	05/19/09	JAR	
1,1,2-Trichloroethane	<1	milligrams/cu. meter	EPA 8260	05/19/09	JAR	
1,1-Dichloroethane	<1	milligrams/cu. meter	EPA 8260	05/19/09	JAR	
1,1-Dichloroethene	<1	milligrams/cu. meter	EPA 8260	05/19/09	JAR	
1,2-Dichloroethane	<1	milligrams/cu. meter	EPA 8260	05/19/09	JAR	
1,2-Dichloropropane	<1	milligrams/cu. meter	EPA 8260	05/19/09	JAR	
Bromodichloromethane	<1	milligrams/cu. meter	EPA 8260	05/19/09	JAR	
Bromoform	<1	milligrams/cu. meter	EPA 8260	05/19/09	JAR	
Bromomethane	<1	milligrams/cu. meter	EPA 8260	05/19/09	JAR	
Carbon tetrachloride	<1	milligrams/cu. meter	EPA 8260	05/19/09	JAR	
Chlorobenzene	<1	milligrams/cu. meter	EPA 8260	05/19/09	JAR	
Chloroethane	<1	milligrams/cu. meter	EPA 8260	05/19/09	JAR	
Chloroform	<1	milligrams/cu. meter	EPA 8260	05/19/09	JAR	
Chloromethane	<1	milligrams/cu. meter	EPA 8260	05/19/09	JAR	
Cis-1,2-Dichloroethene	<1	milligrams/cu. meter	EPA 8260	05/19/09	JAR	
Cis-1,3-Dichloropropene	<1	milligrams/cu. meter	EPA 8260	05/19/09	JAR	
Dibromochloromethane	<1	milligrams/cu. meter	EPA 8260	05/19/09	JAR	
Methylene chloride	<1	milligrams/cu. meter	EPA 8260	05/19/09	JAR	
Tetrachloroethene	<1	milligrams/cu. meter	EPA 8260	05/19/09	JAR	
Trans-1,2-Dichloroethene	<1	milligrams/cu. meter	EPA 8260	05/19/09	JAR	
Trans-1,3-Dichloropropene	<1	milligrams/cu. meter	EPA 8260	05/19/09	JAR	
Trichloroethene	<1	milligrams/cu. meter	EPA 8260	05/19/09	JAR	
Trichlorofluoromethane	<1	milligrams/cu. meter	EPA 8260	05/19/09	JAR	
Vinyl chloride	<1	milligrams/cu. meter	EPA 8260	05/19/09	JAR	

LABORATORY DETAIL REPORT

KAR Project No. : ***091921***

Client: ***DeLisle Associates, LTD.***

Date Reported : ***05/28/09***

Project Description : ***Analysis of three air samples from Goodwill Industries (EN08-101).***

Sample ID : ***"EN08-101-SVE 65C2"***

Sampled By : ***AJG of DeLisle Associates, LTD.***

Sample Date : ***05/18/09***

Sample Time : ***1007***

Date Received : ***05/18/09***

Sample Type : ***air***

KAR Sample No. : ***091921-03***

Test	Result	Units of Measure	Method	Analyzed	Analyst	Comments
MDNR Scan 1	See below		EPA 8260	05/19/09	JAR	
Prep, VOA	Completed		EPA 5030	05/19/09	JAR	
1,1,1-Trichloroethane	<1	milligrams/cu. meter	EPA 8260	05/19/09	JAR	
1,1,2,2-Tetrachloroethane	<1	milligrams/cu. meter	EPA 8260	05/19/09	JAR	
1,1,2-Trichloroethane	<1	milligrams/cu. meter	EPA 8260	05/19/09	JAR	
1,1-Dichloroethane	<1	milligrams/cu. meter	EPA 8260	05/19/09	JAR	
1,1-Dichloroethene	<1	milligrams/cu. meter	EPA 8260	05/19/09	JAR	
1,2-Dichloroethane	<1	milligrams/cu. meter	EPA 8260	05/19/09	JAR	
1,2-Dichloropropane	<1	milligrams/cu. meter	EPA 8260	05/19/09	JAR	
Bromodichloromethane	<1	milligrams/cu. meter	EPA 8260	05/19/09	JAR	
Bromoform	<1	milligrams/cu. meter	EPA 8260	05/19/09	JAR	
Bromomethane	<1	milligrams/cu. meter	EPA 8260	05/19/09	JAR	
Carbon tetrachloride	<1	milligrams/cu. meter	EPA 8260	05/19/09	JAR	
Chlorobenzene	<1	milligrams/cu. meter	EPA 8260	05/19/09	JAR	
Chloroethane	<1	milligrams/cu. meter	EPA 8260	05/19/09	JAR	
Chloroform	<1	milligrams/cu. meter	EPA 8260	05/19/09	JAR	
Chloromethane	<1	milligrams/cu. meter	EPA 8260	05/19/09	JAR	
Cis-1,2-Dichloroethene	<1	milligrams/cu. meter	EPA 8260	05/19/09	JAR	
Cis-1,3-Dichloropropene	<1	milligrams/cu. meter	EPA 8260	05/19/09	JAR	
Dibromochloromethane	<1	milligrams/cu. meter	EPA 8260	05/19/09	JAR	
Methylene chloride	<1	milligrams/cu. meter	EPA 8260	05/19/09	JAR	
Tetrachloroethene	<1	milligrams/cu. meter	EPA 8260	05/19/09	JAR	
Trans-1,2-Dichloroethene	<1	milligrams/cu. meter	EPA 8260	05/19/09	JAR	
Trans-1,3-Dichloropropene	<1	milligrams/cu. meter	EPA 8260	05/19/09	JAR	
Trichloroethene	<1	milligrams/cu. meter	EPA 8260	05/19/09	JAR	
Trichlorofluoromethane	<1	milligrams/cu. meter	EPA 8260	05/19/09	JAR	
Vinyl chloride	<1	milligrams/cu. meter	EPA 8260	05/19/09	JAR	

DeLisle Associates LTD
Geologists • Industrial Hygienists • Educators

SITE INVESTIGATION REPORT
AND
INTERIM RESPONSE ACTIVITES
FOR
SOILS BENEATH THE BUILDING

At

2700 North Pitcher Street
Kalamazoo, Michigan

For

Goodwill Industries of Southwest Michigan
420 East Alcott
Kalamazoo, Michigan

Report Prepared By:
DeLisle Associates LTD
5050 Sprinkle Road
Portage, Michigan 49002

April 2009

DeLisle Job Numbers EN-08-044, EN08-101 and EN08-102

5050 S. Sprinkle Road, Portage, Michigan 49002
Phone 269.373.4500 Fax 269.373.1044
www.delisleassoc.net

Executive Summary

The project site is indentified as 2700 North Pitcher Street, Kalamazoo, Michigan, and is currently owned by Goodwill Industries of Southwest Michigan (Goodwill). Numerous environmental investigations have been conducted at the site and have indentified various volatile organic compounds (VOCs) in the soils and groundwater. The majority of the information presented in this report includes gathered data regarding the former dry cleaning operation, use of a solvent storage building, and groundwater contamination migrating onto the property from off-site source(s) to the west.

Historically, Goodwill operated a dry cleaning operation (1960's to 1980) which expelled spent dry cleaning chemicals to a floor drain which discharged into an onsite septic tank and drain field. Soil and groundwater impairment has been found in association with the former dry cleaning operation.

Prior to Goodwill's occupancy of the 2700 North Pitcher Street building, the property was owned by the Upjohn Company of Kalamazoo, Michigan. A "Solvent Storage Building" location is indentified on a Plot Pan for The Upjohn Company building No. 28. The Plot Plan indicates the solvent storage building to be approximately 25 ft x 30 ft feet and located south of the 2700 North Pitcher Street building. A 1960 aerial photograph also shows the location of the solvent storage building. The Upjohn Company's full usage of the solvent storage building remains unknown at this time, however, an ongoing investigation is being conducted regarding The Upjohn Company's usage of this area.

Groundwater contamination is migrating onto the Goodwill property from off-site source(s) to the west. Groundwater sampling along the western property line has detected vinyl chloride at levels exceeding residential clean up criteria. Groundwater at the Goodwill site has been determined to flow in a southeast to east direction towards the Kalamazoo River.

A soil vapor extraction (SVE) system consisting of four (4) vapor extraction wells has been installed to remediate the soils underlying the 2700 North Pitcher Street building. At this time, only the vadose soils and associated vapors trapped beneath the building are being addressed. The system consists of a 5.5 horsepower, sealed regenerative explosion-proof blower. The SVE system will initially run at a flow rate of 100 cubic feet per minute (CFM). Each vapor extraction well will run at 25 CFM. Estimations indicate a total of 0.82 pounds of contaminates will be recovered per day in the carbon drums.

TABLE OF CONTENTS

PAGE

1.0 Introduction 1

2.0 Objective of Site Investigations 1

3.0 Field Sampling and Investigative Procedures 1
- 3.1 Soil Sampling 2
- 3.2 Soil Sample Collection Procedures 2
- 3.3 Groundwater Sampling 2
- 3.4 Groundwater Monitoring Well Installation 2
- 3.5 Groundwater Monitoring Well Sampling Procedures 3
- 3.6 Survey-Groundwater Elevations 3

4.0 Soil Sampling Locations and Results 3
- 4.1 Beneath the Building 4
- 4.2 Hand Auger Soil Borings 4
- 4.3 Former Septic System South of Building 4
- 4.4 Loading Dock Area 4
- 4.5 Former Solvent Storage Building 5
- Table 1-Soil Results 6

5.0 Groundwater Sampling Results 7
- 5.1 Western Property Line 7
- 5.2 Vertical Profile Sampling 7
- 5.3 Southern Property Line 8
- 5.4 Former Solvent Storage Building Area 8
- 5.5 Groundwater Monitoring Well Sampling 9
- Table 2-Groundwater Results 9

6.0 Interim Response Activities for Soils Beneath The Building 11
- 6.1 Background Information 11
- 6.2 Source Area Soil Remediation Review 11

7.0 Soil Vapor Extraction Pilot Testing 12
- 7.1 Observation Wells 12
- 7.2 Pilot Test Results 12

8.0 Soil Vapor Extraction System (SVE) Components 13
- 8.1 Blower System 13
- 8.2 Extraction Wells 13
- 8.3 Air Vents 13
- 8.4 SVE System Performance 14
- 8.5 SVE System Monitoring and Sampling 14

APPENDICES

Appendix A	Figure 1-Site Location Map 1960 Aerial Photograph
Appendix B	Site Maps: Figure 2-Sampling Locations Figure 3-Groundwater Elevation Map Figure 4-Former Subsurface Structures
Appendix C	Soil Boring Logs
Appendix D	Groundwater Monitoring Well (MW) Logs
Appendix E	Table 3-MDEQ Part 201Generic Clean up Criteria Data Tables
Appendix F	Laboratory Analytical Reports
Appendix G	Observation (OB) Well Logs
Appendix H	Pilot Test Analytical Results
Appendix I	Soil Vapor Extraction (VE) Well Logs Air Vent Well Logs
Appendix J	Figure 5- SVE System Schematic-Treatment Building Figure 6- Soil Vapor Extraction System Well Piping Layout Figure 7- SVE System Performance, Vacuum Radius Influence
Appendix K	SVE Contaminant Recovery Estimation

1.0 Introduction

DeLisle Associates LTD (DeLisle) of Portage, Michigan was retained by Goodwill Industries of Southwest Michigan to perform site investigations at 2700 North Pitcher Street, Kalamazoo, Michigan (hereafter referred to as "Goodwill" or "Subject Site"). Figure 1 – Site Location Map, provided in **Appendix A**, depicts the location of the Subject Site.

A previous subsurface investigation by Fleis & Vanderbrink Engineering, Inc. *Hydrogeologic Investigation,* (dated May 2008) had indentified soil contamination beneath the building and groundwater impairment to the south of the building.

Historically, Goodwill operated a dry cleaning operation which expelled spent dry cleaning chemicals to a floor drain that discharged into an on-site septic tank and drain field. Soil and groundwater impairment has been found to be associated with the dry cleaning operation. This report provides additional data regarding efforts to determine the extent of the soil and groundwater impairment.

Prior to Goodwill's occupancy of the 2700 North Pitcher Street building, the property was owned by the Upjohn Company of Kalamazoo, Michigan. A "Solvent Storage Building" location is indentified on a Plot Pan for The Upjohn Company building No. 28. The Plot Plan indicates the solvent storage building to be approximately 25 ft x 30 ft feet and located south of the 2700 North Pitcher Street building. A 1960 aerial photograph (**Appendix A**) also shows the location of the Solvent Storage Building. An ongoing investigation is currently being conducted regarding The Upjohn Company's usage of the Solvent Storage Building.

Previous site investigations have identified the chemicals Tetrachloroethene or Perchloroethene (PCE) and Tetrachlorethene (TCE) in the soil. Groundwater contaminants PCE, TCE, cis-1, 2-Dichloroethene (DCE) and Vinyl Chloride (VC) have also been found at various locations and depths on the site.

2.0 Objective of Site Investigations

The purpose of the site investigations described in this report was to determine the extent of soil and groundwater impairment as it related to the former dry cleaning operation, use of a Solvent Storage Building, and to determine if groundwater contaminants originating from off-site sources to the west are migrating on to the 2700 North Pitcher Street property.

Investigative activities presented in this report entail various soil and groundwater sampling locations which include areas beneath the building, along the western and southern property lines, loading dock area, former septic tank and drain field, and the former solvent storage building area. Groundwater sampling was conducted to provide vertical contaminant distribution in the upper unconfined aquifer in strategic locations. Groundwater monitoring wells were also installed to determine groundwater flow direction across the site. Figure 2-Sampling Locations is provided in **Appendix B.**

3.0 Field Sampling and Investigative Procedures

Subsurface investigative activities utilized direct push sampling methods with a Geoprobe type rig operated by The Probe-Geosampling, LLC of Otsego, Michigan. Prior to boring activities and between each successive sampling location, all down-hole Geoprobe equipment was washed with a biodegradable detergent and rinsed by steam cleaning.

3.1 Soil Sampling

Soil sampling was conducted with a 5-foot long, stainless steel macro-core sampler and single use acetate liners. Continuous cores of soil were recovered for visual inspection and, when applicable, field screened with a MiniRAE 2000 photo ionization detector (PID). All recovered soils were logged on a boring log at each specific sampling location. Copies of the completed Soil Boring Logs are provided in **Appendix C.**

Borings conducted inside the building were advanced through the concrete floor. A coring machine was used to cut a hole in the concrete for access to the soils beneath the flooring. After completing sampling activities, each bore hole was backfilled with the extracted soils and plugged with bentonite chips. At each inside boring location, the surface was repaired with concrete. Borings conducted outside the building advanced through asphalt were re-surfaced with asphalt patch.

3.2 Soil Sample Collection Procedures

All soils selected for laboratory analysis were collected in general accordance with applicable EPA and MDEQ guidelines and procedures. More specifically, each soil sample was handled using new powder-free nitrile gloves per event. Soil samples were preserved in the field with methanol, per EPA method 5035, in which the selected soil interval was weighed on a portable balance to 10 grams. Once the desired weight was achieved, the soil was placed in to a laboratory prepared vial with Teflon septum lid and 10 ml of methanol for a 1:1 ratio. Each sample was appropriately labeled, logged on a chain-of-custody, and placed in a chilled cooler for transport to the laboratory. Samples were submitted for analysis of volatile organic compounds (VOCs) via method reference EPA SW8260B.

3.3 Groundwater Sampling

Groundwater sampling was conducted using a Geoprobe® Discrete Groundwater Sampler with a 2-foot long retractable screen. Groundwater sampling intervals were field determined. Vertical profile sampling of the upper unconfined aquifer was conducted at strategic locations with three (3) groundwater sampling intervals at each locale. The groundwater sampler was advanced to the desired depth, deepest interval first, and the groundwater sampler mechanism pulled up to expose the screen. New polyethylene tubing was then inserted into the push rod tooling down to connect to the discrete sampling screen. A peristaltic pump was then utilized to purge the groundwater. A constant low rate of 200 ml/L was targeted for sampling. Approximately 2.5 gallons of groundwater was purged allowing the turbidity to clear prior to sample collection.

3.4 Groundwater Monitoring Well Installation

Five (5) 2-inch groundwater monitoring wells were installed using a Geoprobe® type rig. One well (MW-5) was constructed with a 5-foot polyethylene vinyl chloride (PVC) screen and riser. The other four (4) wells were constructed with a 5-foot stainless steel screen and galvanized steel risers. The well screens were set to straddle the water table with approximately 2 feet of screen above the measured water table. Prior to well placement, the bore hole was enlarged to accommodate a clean sand pack around the well screen and at least a foot up the riser. Benonite chips were then added to the remaining annular space up to approximately 6 inches below the ground surface. Each well was then completed with a protective flush mount cemented in place. Each well was sufficiently developed by surge and bail method using a dedicated disposable

bailer. Each well was purged of approximated 7 to 12 gallons of water until the majority of fines were removed and the water appeared clear. All developed water was containerized into one (1) 55 gallon metal drum for disposal. Groundwater Monitoring Well Logs are provided in **Appendix D**.

3.5 Groundwater Monitoring Well Sampling Procedures

All groundwater selected for laboratory analysis was collected in general accordance with applicable EPA and MDEQ guidelines and procedures. More specifically, groundwater samples were collected from selected monitoring wells using low flow sampling techniques. A low flow Masterflex peristaltic pump with polyethylene tubing was used to extract the groundwater for sampling. Tubing was inserted into the well and carefully placed to allow the pumping intake to be below the static water line within the upper column of water. A static water level indicator was used to determine the sampling intake level prior to tubing insertion. The groundwater was passed through a flow cell located after the pump to continuously monitor water quality for determining parameter stability. Water quality indicator parameters including pH, specific conductance, dissolved oxygen (DO), oxidation-reduction potential (ORP), temperature, and turbidity were measured to evaluate water quality stability prior to sample collection. Water sampling activities were conducted in general accordance with *EPA Ground Water Issue (EPA/540/S-95/505) Low-Flow (Minimal Drawdown) Ground Water Sampling Procedures.*

Once the field indicator parameters stabilized, the flow cell was disconnected from the pump discharge tubing and water samples were collected. Water samples were collected in designated containers with preservative if applicable. All collected water samples were appropriately labeled, logged on a chain-of-custody, and placed in a chilled cooler for transport to the laboratory. Samples were submitted for analysis of volatile organic compounds (VOCs) via method reference EPA SW8260B.

3.6 Survey-Groundwater Elevations

Groundwater monitoring wells (MWs) were surveyed to a local Kalamazoo USGS datum bench mark by Ingersoll, Watson & McMachen, Inc, (Ingersoll) professional land surveyors. At each monitoring well location, the north side of the top of casing (TOC) and ground surface elevations were recorded. The survey data along with MW coordinates from a CAD map of the site were inputted into Surfer 32-Golden Software, surface mapping system. The Surfer 32-generated contour map was then imported onto a scaled CAD map of the site to produce Figure 3-Groundwater Elevation Map provided in **Appendix B.**

4.0 Soil Sampling Locations and Results

Numerous soil sampling events have been conducted at the site. Various areas of interest were investigated and samples were collected for laboratory analysis. The following sections address each of the sampling areas and the associated analytical results are presented in Table 1-Soil Results Summary. Table 3, presented in **Appendix E**, compares soil sampling results to applicable Part 201 Generic Cleanup Criteria and Screening Levels. Sampling locations can be referenced on Figure 2-Sampling Locations provided in **Appendix B** and the Laboratory Analytical Reports are presented in **Appendix F.**

4.1 Beneath the Building (October 2008)

The majority of soil samples collected from beneath the concrete floor indicted elevated levels of PCE with one sample exhibiting TCE above analytical method detection. Seven (7) soil borings were conducted during this phase of work, BH-3, 4, 5, 6, 7, 8 and 9. Analytical results from the soil sample EN08-044-10, (BH-5) were below method detections for all volatiles. Sample results appeared higher nearer the source area identified as the former dry cleaning room. Sample EN08-044-09 (BH-4) collected from 2.0 to 3.0 feet below the concrete floor had the highest level of PCE at 80,000 µg/Kg (no TCE detected in this sample). TCE was detected in sample EN08-044-13 (BH-8) at 2,500 µg/Kg with PCE at 61,000 µg/Kg.

Physical inspection of soils recovered during sampling activities did not consistently indicate obvious impairment, such as soil staining or other olfactory indications. Review of the sampling results suggests that contaminant vapors are trapped beneath the concrete floor and appear to have spread out from the point of release area within the former dry cleaning room.

Results from a soil sample collected outside the building, proximate to the source area, also supports the likelihood of trapped vapors. Specifically soil sample EN08-044-20, collected from BH-13, did not contain any volatiles above their respective method detection levels.

4.2 Hand Auger Soil Borings (January 2008)

Three (3) hand auger soil borings (BH-19, 20, 21) were conducted inside the former dry cleaning room. Two (2) borings were placed near a former discharge drain line and the other was placed near the former floor drain. Results of the sampling indicated significant soil impairment in all samples. Sample EN08-101-39 (BH-19) indicated PCE at 2,100 µg/Kg and TCE at 110 µg/Kg. Sample EN08-101-40 (BH-20) indicated PCE at 690,000 µg/Kg and TCE at 480 µg/Kg. Sample EN08-101-41(BH-21) indicated PCE at 230,000 µg/Kg and TCE at 6,700 µg/Kg

4.3 Former Septic System South of Building (October 2008)

A soil sample, EN08-044-30 (BH-16) was collected from the former septic system's eastern drain field. Analytical results did not indicate any volatiles above method detection. Previous soil samples from the western drain field area by Fleis & Vanderbrink, *Hydrogrologic Investigation,* dated May 2008, also did not indicate any elevated volatiles above method detection. Therefore, no soil contamination has been identified to the south of the Goodwill building, in the area of the former septic system.

4.4 Loading Dock Area-Bare Ground (October 2008)

Soil sampling proximate to the northeast corner of the Goodwill building in an area of bare ground between a loading dock and concrete ramp does show PCE soil impairment. Only PCE was detected in the two (2) samples collected from within this area. Soil sample EN08-044-19 (BH-12) indicated PCE at 810 µg/Kg and EN08-044-31 (BH-17) indicated PCE at 160 µg/Kg. Analytical results of surrounding samples EN08-044-17 (BH-10) and EN08-044-18 (BH-11) did not indicate any volatiles above method detection. The impairment in this small area is suspected to be from mis

handling of dry cleaning fluids. Groundwater sampled from MW-2, located in the bare ground area, contained only PCE (3.9 μg/L) above the method detection level but below applicable Part 201 clean up criteria of (5.0 μg/L).

4.5 Former Solvent Storage Building (February 2009)

A former solvent storage building was indicated to the south of the Goodwill building. During this sampling event, the concrete floor of the former solvent storage building was discovered to be located just below the asphalt covered parking lot surface.

Soil samples collected beneath the concrete floor and surrounding the former solvent storage building contained elevated levels above the Part 201 cleanup criteria of PCE and Bromomethane*. Sample EN08-102-42 (BH-22) indicated PCE at 300 μg/Kg, sample EN08-102-46 (BH-23) indicated PCE at 450 μg/Kg, sample EN08-102-50 (BH-24) indicated PCE at 7,800 μg/Kg. Sample EN08-102-53 (BH-25) indicated PCE at 120 μg/Kg, and sample EN08-102-61(BH-27) indicated PCE at 160 μg/Kg.

*Bromomethane

The existence of bromomethane in all soil samples collected during this sampling event appears to be an anomaly. Additional laboratory sampling verified the existence of this chemical analyte, however, speculation exists in that all sampling locations were all beneath the asphalt pavement, placed approximately 15 years ago. Bromomethane breaks down relatively quickly, and at this time there is no known source or usage of this chemical associated with this site. No groundwater samples collected at the site have shown any existence of Bromomethane. The laboratory had suggested that Bromomethane may be the product of a chemical reaction with some Bromine containing constituents in the soils and the methanol used to preserve the soil samples per EPA method 5035. When de-ionized water is used in the extraction process (instead of methanol), Bromomethane is not present. At this time, bromomethane is not considered a major contaminate of concern. Further sampling in the area will be required to verify a reliable existence of this chemical.

Table 1- Soil Results Summary
Results in µg/Kg

Location	Sample No.	Depth feet	Type (S/W)	PCE	TCE	cis-DCE	VC	1,2,4-TMB	1,3,5-TMB	o,m,p Xylenes
BH-3	EN08-044-08	9.0-10.0	S	**310**	<50	<50	<40	<50	<50	<50/<100
BH-4	EN08-044-09	2.0-3.0	S	**280,000**	<50	<50	<40	250	120	230
BH-5	EN08-044-10	3.0	S	<50	<50	<50	<40	<50	<50	<50/<100
BH-6	EN08-044-11	2.0-3.0	S	**2,000**	<50	<50	<40	<50	<50	<50/<100
BH-7	EN08-044-12	2.0-3.0	S	**82**	<50	<50	<40	<50	<50	<50/<100
BH-8	EN08-044-13	4.5	S	**61,000**	**2,500**	<50	<40	110	<50	<50/<100
BH-9 (MW-6)	EN08-044-14	7.0	S	**940**	<50	<50	<40	<50	<50	<50/<100
BH-10	EN08-044-17	4.0-4.5	S	<50	<50	<50	<40	<50	<50	<50/<100
BH-11	EN08-044-18	4-4.5	S	<50	<50	<50	<40	<50	<50	<50/<100
BH-12	EN08-044-19	4.0-4.5	S	**810**	<50	<50	<40	<50	<50	<50/<100
BH-13	EN08-044-20	3.5-4.0	S	<50	<50	<50	<40	<50	<50	<50/<100
BH-16	EN08-044-30	3.5-4.0	S	<50	<50	<50	<40	<50	<50	<50/<100
BH-17	EN08-044-31	4.5-5.0	S	**160**	<50	<50	<40	<50	<50	<50/<100
BH-19	EN08-101-39	3.0	S	**2,100**	110	<50	<40	<50	<50	<50/<100
BH-20	EN08-101-40	3.5	S	**690,000**	480	<50	<40	140	80	<50/<100
BH-21	EN08-101-41	3.5	S	**230,000**	6,700	<50	<40	190	110	<50/<100
BH-22	EN08-102-42	4.0	S	**300**	<50	<50	<40	<50	<50	<50/<100
BH-23	EN08-102-46	6-7	S	**450**	<50	<50	<40	<50	<50	110
BH-24	EN08-102-50	7-8	S	**7,800**	<50	<50	<40	<50	<50	<50/<100
BH-25	EN08-102-53	6-6.5	S	**120**	<50	<50	<40	<50	<50	<50/<100
BH-26	EN08-102-57	5-5.5	S	<50	<50	<50	<40	<50	<50	<50/<100
BH-27	EN08-102-61	3.5-4	S	**160**	<50	<50	<40	<50	<50	<50/<100
BH-28	EN08-102-62	5-5.5	S	<50	<50	<50	<40	<50	<50	<50/<100

PCE=Tetrachloroethene TCE=Trichloroethene cis-DCE=cis-1,2 Dichloroethene VC=Vinyl Chloride TMB=Trimethylbenzene

5.0 Groundwater Sampling Results

Analytical results from groundwater sampling activities discussed in the following sections are presented in the accompanying Table 2-Groundwater Results Summary. Sampling locations can be referenced on the site maps provided in Appendix B. The Laboratory Analytical Report is included in **Appendix F**.

The groundwater flow direction at the site has been determined to be in a southeast direction with an easterly trend. See **Appendix B** for Figure 3-Groundwater Elevation Map.

5.1 Western Property Line (October 2008)

Vertical profile sampling of the groundwater was conducted at two (2) locations along the western property line of the Goodwill property. Sampling was performed at the southwest corner (BH-1) and northwest corner (BH-2), and consisting of three (3) sampling depth intervals at each boring location: shallow, intermediate, and deep.

Results of sampling at the southwest corner (BH-1) indicate vinyl chloride (VC) is present above Part 201 generic cleanup criteria. At a depth interval of 38-40 ft bgs, VC was detected at 11.0 µg/L. At the intermediate depth interval (24-26 ft bgs), VC was detected at 13.0 µg/L. The shallow interval (9-11 ft bgs) groundwater sample did not contain VC above the analytical method detection level.

Results of groundwater sampling at the northwest corner (BH-2) indicate VC is present above Part 201generic cleanup criteria. At a depth interval of 29-31 ft bgs, VC was detected at 4.6 µg/L. At the intermediate depth interval (19-21 ft bgs), VC was detected at 8.4 µg/L. At the shallow depth interval (9-11 ft bgs), VC was detected at 1.3 µg/L.

Results of the groundwater sampling along the western property line, when considered with the southeast to east groundwater flow direction, indicates that VC is migrating onto the Goodwill property from an off-site source(s) to the west.

5.2 Vertical Profile Sampling (October 2008)

Other areas on the Goodwill property were selected for vertical profile sampling in an attempt to delineate the groundwater impairment associated with the former dry cleaning operation.

BH-9 and MW-6

Soil boring BH-9 was conducted inside the Goodwill building proximate to the former dry cleaning room and included two (2) vertical profile samples and the installation of a monitoring well (MW-6). Vertical profile sample EN08-044-15, collected from a depth interval of 38-40 ft bgs, did not contain any volatiles above their respective analytical method detection levels. Sample EN08-044-16, collected from a depth interval of 25-27 ft bgs, indicated cis-DCE at 1.8 µg/L and VC at 1.1 µg/L.

Monitoring well MW-6 was installed in BH-9 with the well screen set to straddle the water table. Groundwater sample EN08-044-35 was extracted from 10.5 ft bgs and analytical results revealed PCE at 400 µg/L and TCE at 2.1 µg/L. MW-6 is located down gradient from the former dry cleaning room.

BH-13 and BH-14

Vertical profile sampling was conducted outside the Goodwill building in the asphalt parking lot area to the south. Each boring location consisted of three (3) vertical sampling intervals: shallow, intermediate and deep. Results of the vertical profile sampling indicate PCE is present at the shallow interval (10-12 ft bgs) of BH-13 at 19.0 µg/L and from BH-14 at 24 µg/L. Groundwater collected from the intermediate interval (18-20 ft bgs) in BH-13 did not contain any volatiles above their respective method detection levels, groundwater from the intermediate depth interval in BH-14 (19-21 ft bgs) contained TCE (1.5 µg/L) and cis-DCE (1.6 µg/L) at relatively low concentrations. At both sampling locations, groundwater collected from the deep interval (35-37 ft bg) showed elevated levels of VC at 2.0 µg/L in BH-13 and 3.0 µg/L in BH-14.

5.3 Southern Property Line (October 2008)

BH-15

Vertical profile sampling was conducted along the southern property boundary. This boring location consisted of three (3) vertical sampling intervals: shallow, intermediate and deep. Results from the shallow interval (10-12 ft bgs) sample indicated PCE at 32.0 µg/L, TCE at 1.2 µg/L, cis-DCE at 1.1 µg/L, and VC at 1.3 µg/L. Groundwater from the intermediate depth interval (19-21 ft bgs) show only cis-DCE at 19.0 µg/L and VC at 7.4 µg/L. Groundwater from the deep interval (35-37 ft bgs) indicated TCE at 2.3 µg/L, cis-DCE at 2.4 µg/L, and VC at 5.4 µg/L.

BH-18 and MW-7

Vertical profile sampling was conducted along the southern property boundary, proximate to a former Solvent Storage Building identified on a Site Plan for The Upjohn Company's building No. 28.

Boring location BH-18 consisted of three (3) vertical sampling intervals: shallow, intermediate and deep. Results from the shallow interval (10-12 ft bgs) sample indicate PCE at 30.0 µg/L, cis-DCE at 15 µg/L, and VC at 2.0 µg/L. Results of the intermediate sampling interval (19-21 ft bgs) indicate only VC at 9.4 µg/L. Groundwater collected from the deep sampling interval (35-37 ft bgs) contained cis-DCE at 2.3 µg/L and VC at 6.1µg/L.

Subsequent to the completion of the vertical profile sampling, groundwater monitoring well MW-7 was installed at BH-18 with its 5-foot long screen straddling the water table.

5.4 Former Solvent Storage Building Area (February 2009)

Five (5) groundwater sampling locations (BH-22, 23, 24, 25, and 26) were selected for this area. Vertical profile sampling was conducted at each locale surrounding the former Solvent Storage Building location. With the exception of BH-24, each boring consisted of three (3) vertical sampling intervals: shallow (10-12 ft bgs), intermediate (20-22 ft bgs), and deep (33-37 ft bgs). The deep sampling interval for BH-24 was at a depth of 29-31 ft bgs. Results from the vertical profile sampling indicated PCE is present at the shallow interval at 21.0 µg/L in BH-22, 200.0 µg/L in BH-23, 15.0 µg/L in BH-24, and 2.6 µg/L in BH-26. Shallow interval groundwater from BH-23 also contained TCE at 2.8 µg/L and cis-DCE at 7.7 µg/L. Groundwater from the intermediate depth at all five (5) boring locations exhibited levels of VC exceeding the

Part 201drinking water criteria of 2.0 µg/L. Analytical results from the deep aquifer sampling interval at each boring location indicated levels of VC exceeding Part 201 drinking water criteria. In addition, deep interval groundwater from BH-22, 23, and 24 each contained detectable levels of cis-DCE.

5.5 Groundwater Monitoring Well Sampling (October 2008)

Two (2) additional groundwater monitoring wells, MW-8 and MW-9, were installed along the southern property line during this phase of investigation. All monitoring wells installed during this investigation, along with existing groundwater monitoring wells (Flies & Vanderbrink), were surveyed to a common Kalamazoo datum for use in the determination of groundwater flow direction. Figure 3-Groundwater Elevation Map provided in **Appendix B** indicates the calculated groundwater flow direction at the site.

MW-8

Groundwater monitoring well MW-8 was installed just south of the former drain field proximate to the southern property line. Groundwater collected from MW-8 at a depth of 6.75 ft bgs contained PCE at 17.0 µg/L, TCE at 6.8 µg/L, cis-DCE at 55 µg/L, and VC at 37.0 µg/L.

MW-9

Groundwater monitoring well MW-9 was installed to the east of MW-8, proximate to the southern property line. Groundwater collected from MW-9 at a depth of 5.75 ft bgs contained only PCE at 4.8 µg/L.

Table 2-Groundwater Results Summary
Results in µg/L

Location	Sample No.	Date	Depth feet	Type (S/W)	PCE	TCE	cis-DCE	VC
BH-1	EN08-044-01	10/22/2008	38-40	W	<1.0	<1.0	<1.0	**11.0**
BH-1	EN08-044-02	10/22/2008	24-26	W	<1.0	<1.0	<1.0	**13.0**
BH-1	EN08-044-03	10/22/2008	9-11	W	<1.0	<1.0	<1.0	<1.0
MW-2	EN08-044-04	10/22/2008	5.75	W	**3.9**	<1.0	<1.0	<1.0
BH-2 (MW-5)	EN08-044-05	10/22/2008	29-31	W	<1.0	<1.0	<1.0	**4.6**
BH-2	EN08-044-06	10/22/2008	19-21	W	<1.0	<1.0	<1.0	**8.4**
BH-2	EN08-044-07	10/22/2008	9-11	W	<1.0	<1.0	<1.0	**1.3**
BH-9 (MW-6)	EN08-044-15	10/22/2008	38-40	W	<1.0	<1.0	<1.0	<1.0
BH-9 (MW-6)	EN08-044-16	10/22/2008	25-27	W	<1.0	<1.0	**1.8**	**1.1**
BH-13	EN08-044-21	10/28/2008	35-37	W	<1.0	<1.0	<1.0	**2.0**
BH-13	EN08-044-22	10/28/2008	18-20	W	<1.0	<1.0	<1.0	<1.0
BH-13	EN08-044-23	10/28/2008	10-12	W	**19.0**	<1.0	<1.0	<1.0
BH-14	EN08-044-24	10/28/2008	35-37	W	<1.0	<1.0	<1.0	**3.0**

Table 2-Groundwater Results Summary (Continued)
Results in µg/L

BH-14	EN08-044-25	10/28/2008	19-21	W	**6.0**	**1.5**	**1.6**	<1.0
BH-14	EN08-044-26	10/28/2008	10-12	W	**24.0**	<1.0	<1.0	<1.0
BH-15	EN08-044-27	10/28/2008	35-37	W	<1.0	**2.3**	**2.4**	**5.4**
BH-15	EN08-044-28	10/28/2008	19-21	W	<1.0	<1.0	**19.0**	**7.4**
BH-15	EN08-044-29	10/28/2008	10-12	W	**32.0**	**1.2**	**1.1**	**1.3**
BH-18	EN08-044-32	10/28/2008	35-37	W	<1.0	<1.0	**2.3**	**6.1**
BH-18	EN08-044-33	10/28/2008	19-21	W	<1.0	<1.0	<1.0	**9.4**
BH-18 (MW-7)	EN08-044-34	10/28/2009	10-12	W	**30**	<1.0	**15**	**2**
MW-6	EN08-044-35	11/10/2008	10.5	W	**400**	**2.1**	<1.0	<1.0
MW-8	EN08-044-36	11/10/2008	6.75	W	**17**	**6.8**	**55**	**37**
MW-9	EN08-044-37	11/10/2009	5.75	W	**4.8**	<1.0	<1.0	<1.0
BH-22	EN08-102-43	2/29/09	35-37	W	<1.0	<1.0	4.9	**7.6**
BH-22	EN08-102-44	2/29/09	20-22	W	<1.0	<1.0	<1.0	**7.5**
BH-22	EN08-102-45	2/29/09	10-12	W	**21**	<1.0	<1.0	1.2
BH-23	EN08-102-47	2/29/09	35-37	W	**<1.0**	<1.0	21	**8.5**
BH-23	EN08-102-48	2/29/09	20-22	W	<1.0	<1.0	<1.0	**8.0**
BH-23	EN08-102-49	2/29/09	10-12	W	**200**	2.8	7.7	<1.0
BH-24	EN08-102-51	2/29/09	29-31	W	1.3	<1.0	<1.0	**3.2**
BH-24	EN08-102-52	2/29/09	10-12	W	**15**	<1.0	<1.0	**4.2**
BH-25	EN08-102-54	2/29/09	35-37	W	<1.0	<1.0	<1.0	**3.9**
BH-25	EN08-102-55	2/29/09	18.5-20.5	W	<1.0	<1.0	<1.0	**5.2**
BH-25	EN08-102-56	2/29/09	10-12	W	<1.0	<1.0	<1.0	**2.4**
BH-26	EN08-102-58	2/29/09	33-35	W	<1.0	<1.0	<1.0	**3.1**
BH-26	EN08-102-59	2/29/09	20-22	W	<1.0	<1.0	<1.0	**4.4**
BH-26	EN08-102-60	2/29/09	10-12	W	2.6	<1.0	<1.0	**2.9**

PCE=Tetrachloroethene TCE=Trichloroethene cis-DCE=cis-1,2-Dichloroethene VC=Vinyl Chloride

6.0 Interim Response Activities for Soils Beneath The Building

6.1 Background

Site investigations have determined that soils underlying the building are contaminated with dry cleaning chemicals as the result from former on-site activities. The release area has been identified as a floor drain associated with the discharge line of the former dry cleaning machine. Spent dry cleaning solution was discharged to a drain line that emptied into a floor drain which, in turn, discharged into an on-site septic tank and drain field. The dry cleaning operation had ceased in approximately 1980. The septic tank and drain field were subsequently removed and the facility hooked up to municipal sanitary sewer system in 1995.

Soil and soil gas sampling activities have been conducted at various locations throughout the building. The major chemicals of concern are Tetrachloroethylene (Perchloroethene or PCE) and Trichlorethene (TCE), a breakdown chemical of PCE. The levels of contaminates appear highest within the soils underlying the location of the former dry cleaning operation. Significant soil impairment appears limited to the floor drain area with contaminate vapors emanating from the source. Sub-slab soil gas sampling was conducted within the building by Envirologic Technologies, Inc. (Envirologic) of Kalamazoo, Michigan. The sub-slab sample results further indicate that contaminate vapors have migrated laterally beneath the concrete flooring to areas beyond the source area. Subsurface conditions are conducive to allowing the contaminate vapors to migrate beneath the concrete floor through a loose cinder layer deposited prior to building erection. The thickness of the cinder layer varies from less than one (1) foot to several feet thick in some areas. The target zone of extraction is the layer of cinders which provides the greatest permeability for the movement of vapors.

6.2 Source Area Soil Remediation Review

Options for source area remediation of the vadose soils underlying the building were reviewed. The relative feasibilities of soil excavation and soil vapor extraction were evaluated and it was determined that soil vapor extraction (SVE) would be the better option for the site.

Removal of the contaminated soils at the source area was found to be comparatively infeasible based on the following rationale:

- The depth of the soil contamination at the floor drain area begins at approximately 2.5 feet bgs and extends to approximately 9.5 feet bgs (the groundwater interface).
- The location of the soil contamination is proximate to a structural supportive wall and building foundation footing.
- The instability of the soils with cinders would make soil excavation larger than necessary requiring sheet piling to secure side walls.
- Estimates indicate that the extraction of 15 cubic yards of contaminated soil would require the excavation of approximately100 yards of soil.

A review of costs associated with soil removal indicated that a SVE process would be the better option for contaminate source remediation, while possessing the additional capacity to remediate the trapped contaminate vapors that have migrated beyond the source area.

7.0 Soil Vapor Extraction (SVE) Pilot Test

A SVE pilot test was conducted on March 16, 2009 to provide SVE system design and initial system operation settings. The pilot test was conducted using vapor extraction well VE-3, installed at the source area, using a portable SVE unit with a 5 hp blower system. Vacuum rates of 50 standard cubic feet per minute (SCFM) and 25 SCFM were applied to EW-3 to evaluate the resulting radii of influence. Multiple monitoring points were used to record vacuum levels. Two (2) 200 lb drums of vapor phase carbon were used during the pilot test to remove extracted vapor contaminates prior to discharge to the atmosphere.

7.1 Observation wells

Four (4) temporary observation (OB) wells were installed in the building to monitor vacuum rates during the pilot test. Each observation well consisted of a 1-inch diameter PVC well screen positioned within the target zone of cinder fill material at an approximate depth of 2 to 3 feet below the concrete flooring. Well casings were sealed within the 6-inch thick concrete flooring with bentonite grout and a latex caulk at the surface to provide an air tight seal. Each observation well casing extended up from the concrete floor and was caped with a brass nipple for the attachment of a vacuum pressure gauge. Temporary OB well construction logs are provided in **Appendix G**.

In addition to the installed OB wells, vacuum measurements were also conducted using the sub-slab soil gas sampling points installed by Envirologic.

7.2 Pilot Test Results

Pilot test #1 was set up to run the mobile SVE unit at a flow rate of 50 SCFM producing a vacuum pressure of 2.0 inches of Hg recorded at VE-3. Once the SVE unit was turned on, an immediately measureable vacuum was observed in all four (4) OBs followed by quickly stabilizing levels. The radius of influence exceeded 20 feet per the detection of a vacuum in OBs 1, 2, and 4, and extended to beyond 30 feet per OB-3. An air sample of the extracted vapors was collected prior to passing through the carbon absorption drums and analyzed for Tetrachlorothene (PCE). Results indicated extracted vapors contained 11.9 parts per million (ppm) of PCE.

Pilot test #2 was set up to run the mobile SVE unit at a flow rate of 25 SCFM producing a vacuum pressure of ≤1.5 inches of Hg recorded at VE-3. Pilot test #2 was set up to run at 25 SCFM flow rate with inches of Hg recorded at VE-3. Once the SVE unit was turned on, an immediately measureable vacuum was observed at OBs 1, 2 and 3 followed by quickly stabilizing levels. OB-4, positioned 20 feet away did not show indication of vacuum. It is believed that air movement at the lower flow rate may be restricted by the inner building footings of a wall between VE-3 and OB-4. The radius of influence exceeded 20 feet per OBs 1 and 2, and extended to at least 30 feet per OB-3. A sample of the extracted vapors was collected and analyzed for PCE. Results indicated extracted vapors contained 3.36 ppm of PCE.

Pilot Test 1: VE-3 at 50 SCFM, 2.0 in Hg

Observation Well No.	Screen Interval (feet below surface)	Distance from VE-3 (feet)	Stabilized Vacuum (inches of water)
OB-1	0.5 -3.0	10	0.320
OB-2	0.5-3.0	20	0.210
OB-3	0.5-3.0	30	0.090
OB-4	0.5-4.5	20	0.005

Pilot Test 2: VE-3 at 25 SCFM, ≤1.5 in Hg

Observation Well No.	Screen Interval (feet below surface)	Distance from VE-3 (feet)	Stabilized Vacuum (inches of water)
OB-1	0.5 -3.0	10	0.135
OB-2	0.5-3.0	20	0.090
OB-3	0.5-3.0	30	0.040
OB-4	0.5-4.5	20	0.000

During the one (1) day long pilot test, a composite sample of the extracted air discharge (after passing through the carbon drums) was collected and analyzed for total volatile organic compounds (VOCs). Results of the air sample were reported as below method detection, therefore, no measurable concentrations of VOCs were being discharged into the atmosphere during the pilot test.

Results of the charcoal tube air samples collected during the pilot test are provided in **Appendix H.**

8.0 Soil Vapor Extraction System Components

8.1 Blower System

The installed Soil Vapor Extraction System (SVE) consists of an explosion proof, sealed, regenerative blower system (Rotron EN707FL5MWL) with a maximum flow rate of 295 SCFM. The system is assembled in a vertical configuration with a 55-gallon knock-out tank, high level shut off switch, and control panel.

Four (4) VE wells have been installed within the building and are piped to a central location where they exit the building and enter the SVE treatment shed. The piping from each VE well is connected to a manifold system that allows for varied flow rate adjustments of each well. The manifold system combines the extracted vapors from all four (4) VE wells for treatment via vapor phase carbon adsorption. The treated vapors are ultimately expelled to the atmosphere through an exhaust vent in the side of the treatment shed. An air discharge permit is not required provided it can be demonstrated that less than 10 lbs of contaminates do not enter the atmosphere on a monthly basis.

8.2 Vapor Extraction (VE) Wells

Each of the four (4) VE wells is constructed with a 2-inch diameter, 5-foot long, 10-slot PVC screen and riser(s). Each well extends beneath the concrete floor to an approximate depth of 7.5 feet bgs. Coarse-grained clean sand was placed into the annular space surrounding the well screen. Within the upper 2 feet of the well screen to approximately 6 inches below the cement floor, the boring was widened to 2 feet in diameter and filled with pea gravel. Bentonite grout was placed onto of the pea gravel then concrete was added to seal and cement the well casing in place. Extraction well construction logs are provided in **Appendix I.**

8.3 Air Vents

Fourteen (14) air vents are positioned within the building to provide air flow to the subsurface to aid the vapor extraction process. The air vents are constructed with a 2-inch diameter, 2.5-foot long 10-slot PVC well screen installed to a depth of 3 feet bgs. Well risers are reduced to 1.5-inch diameter PVC and cemented in place with the air vent opening located approximately 14 feet above the floor at the I-beam columns and 8

to 12 feet above the floor along the walls. A Mylar® film damper/backflow preventer is incorporated at the top of the air vent casing to restrict any contaminate vapor emissions into the building when the SVE system is down for carbon change out, power outages, or repairs. Air vent well logs are provided in **Appendix I**.

8.4 SVE System Performance

The initial operation of the SVE system will be set up to run four (4) extraction wells at 25 SCFM each for a total system operation air flow rate of 100 SCFM. During system operation, various vacuum monitoring points were measured using a Magnehelic gauge for determining the radius of influence of the VE wells. Provided in **Appendix J** is Figure 5 - SVE System Schematic/Treatment Building and Figure 6 - SVE System Piping Layout, and Figure 7 - SVE System Performance, Vacuum Radius Influence.

The daily concentration of the total extracted vapors is estimated at 13 ppm of PCE and 3 ppm of TCE (VE-3). Based on preliminary calculations of flow rates, vapor concentrations, and 95% carbon absorption, it is estimated that 0.82 pounds of contaminates will be recovered per day by the carbon drums. The SVE Contaminate Recovery Estimation for both PCE and TCE is provided in **Appendix K**.

The applicability of an air permit for the remediation process was evaluated. Based on Rule 290 the process does not need an air permit if the controlled emissions from clean up of carcinogenic volatile organic compounds (PCE and TCE) does not exceed 10 pounds per month. The type of air treatment technology, activated carbon, is proven to be ≥95% efficient at recovering volatile contaminates. The influent vapors will be monitored and calculations periodically performed to document the air emissions on a monthly basis. The recovery and treatment system will be evaluated continuously to document compliance with the rules pertaining to the air permit exemption.

8.5 SVE System Operation and Maintenance

Weekly visits to the treatment system will be conducted during the first few months of system operation. The weekly visits will consist of system vacuum checks, meter readings, checks for air leaks, and inspection of the system components located within the building. These visits will monitor vapor readings from the blower exhaust line (composite flow) prior to the carbon vessels, between each drum of carbon, and at the exhaust port to the atmosphere. PID readings will be collected at predetermined access points on the system every two weeks and, when applicable, air samples will be collected for laboratory analysis to monitor the vapor extraction process and schedule for carbon drum replacement.

APPENDIX A

2700 North Pitcher Street
Kalamazoo, Michigan
April 2009
DeLisle Job No. EN08-044

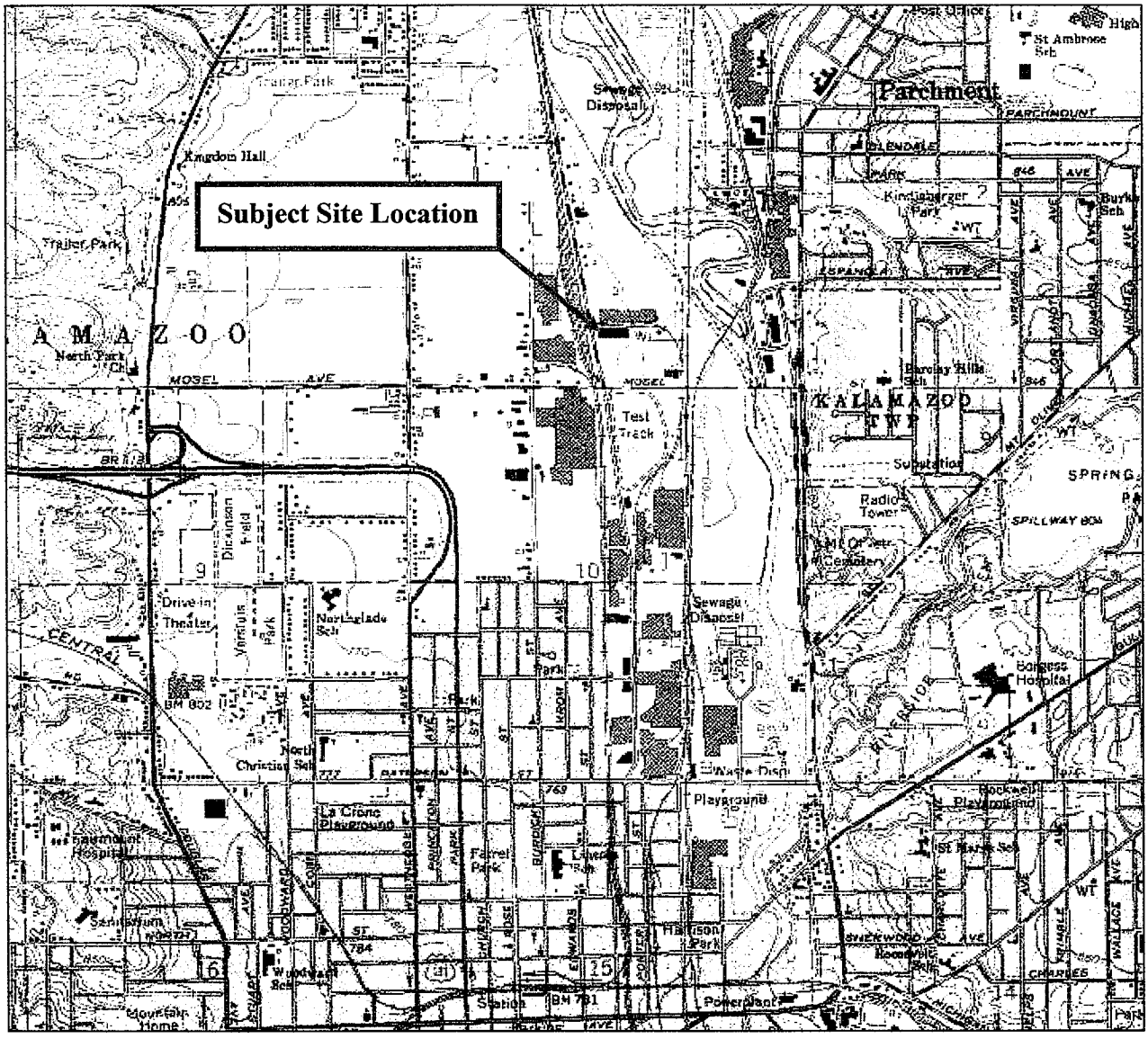

FIGURE 1 – SITE LOCATION MAP

Subject Site:

2700 North Pitcher Street
Kalamazoo Township
Kalamazoo County, Michigan

N

This Site Location Map was extracted from the United States Geological Service (USGS), 7.5 – Minute Topographic Series, Kalamazoo Quadrangle (Map year 1999 – Photorevised from 1995).

1960 Aerial Photograph

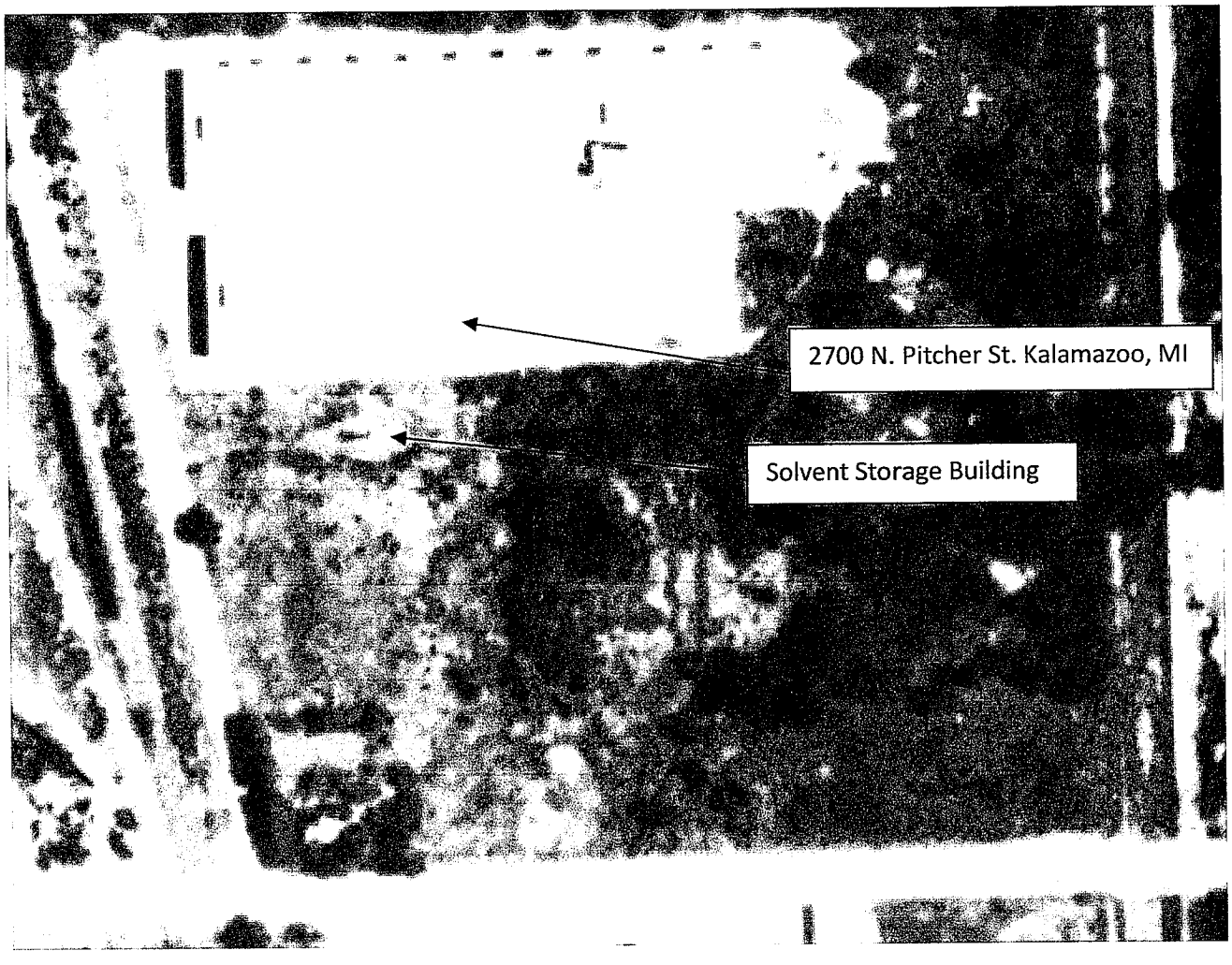

1960 Aerial Photograph excerpt. Photograph shows location of 2700 North Pitcher Street building and Upjohn Company's Solvent Storage Building.

Photograph acquired from the Michigan State University Aerial Imagery Archive, file number BDW-1AA-157 of year 1960.

APPENDIX B

DeLisle Associates LTD

Property Line

BH-2
MW-5

Goodwill Industries

Concrete Ramp

BH-11
BH-17
MW-2
BH-12
Bare ground
BH-10

Loading Dock Area

Asphalt

Concrete Dock

Property Line

BH-6
BH-7

BH-21
BH-4
BH-19
BH-8
Dry Cleaning Room
BH-9 MW-6
BH-20
BH-3
Former Floor Drain
BH-5

BH-13

BH-25

Sanitary Line

BH-24

BH-14

BH-26

BH-23

BH-22
BH-27

BH-16

BH-1

MW-9

Property Line

BH-28
MW-7
BH-18
BH-15
MW-8

LEGEND

Groundwater Monitoring Well (MW)

Bore Hole (BH)
Soil and/or groundwater sample

Burried Utility

Scale
1" = 40 ft

Figure 2 - Sampling Locations

Goodwill Industries of SW Michigan
2700 North Pitcher Street
Kalamazoo, Michigan

Date:	Job No.
October/November/December 2008 January/February 2009	EN08-044

DeLisle Associates LTD

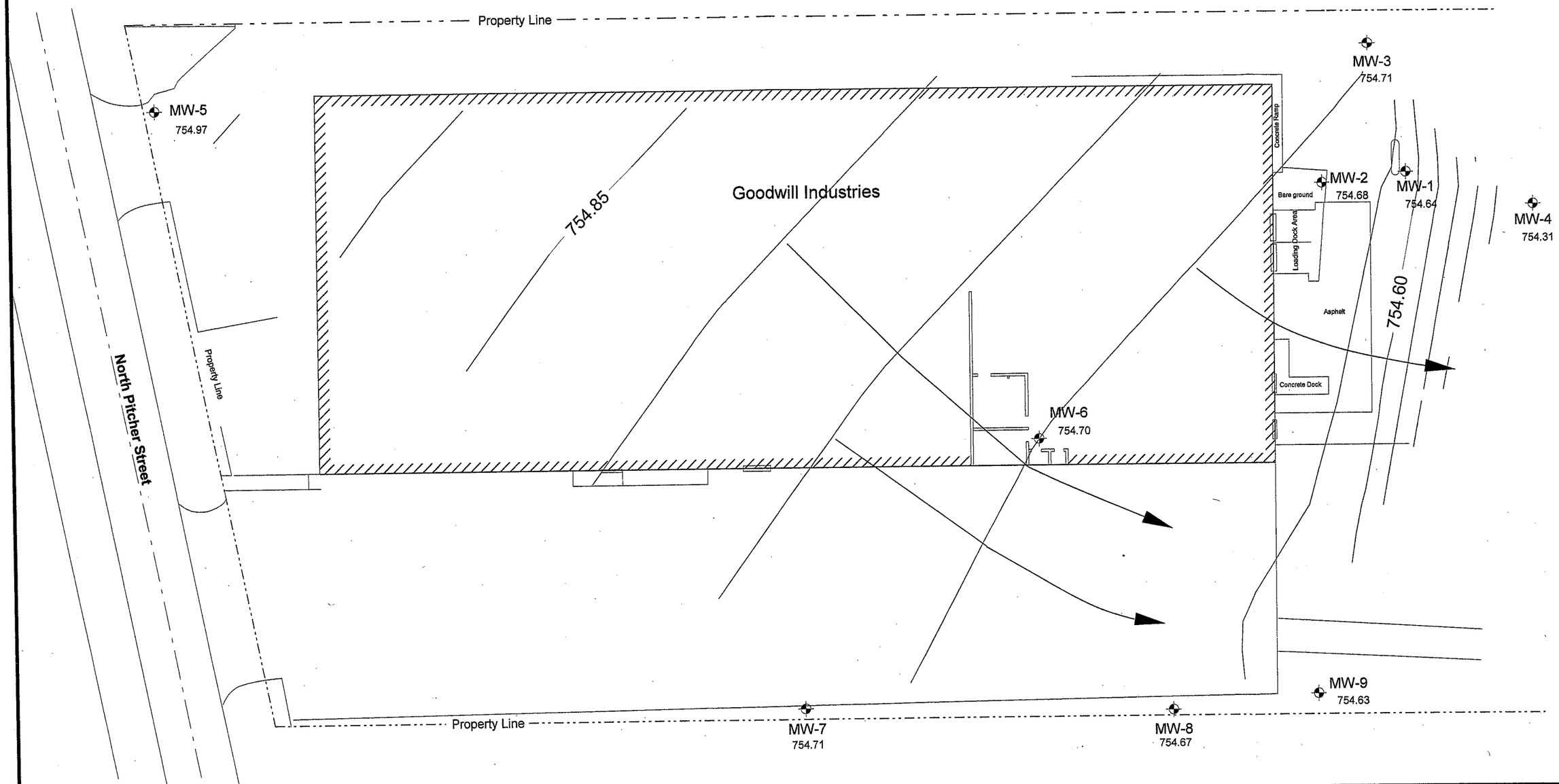

LEGEND

N

Groundwater Monitoring Well (MW)

Groundwater Elevation Contours
Elevations based on U.S.G.S. datum as provided and promulagated within the City of Kalamazoo. Site bench mark elevation: 764.10

Flow Direction

Scale
1" = 40 ft

Figure 3-Groundwater Elevation Map

Goodwill Industries of SW Michigan
2700 North Pitcher Street
Kalamazoo, Michigan

Date:	Job No.
November 10, 2008	EN08-044

DeLisle Associates LTD

Property Line

Goodwill Industries

Concrete Ramp

Bare ground

Loading Dock Area

Asphalt

Concrete Dock

Property Line

Dry Cleaning Room

Floor Drain

Proximate area
Septic System
Tank and Drywell

Septic Tanks

Sanitary Line

Solvent Storage Bldg

Drain Field

Drain Field

Property Line

N

Former Subsurface Structures

-Septic Tanks and Drain Fields (Goodwill)

-Septic System-Tank and Dry Well (The Upjohn Co.)

Scale
1" = 40 ft

Figure 4-Former Subsurface Structures

Goodwill Industries of SW Michigan
2700 North Pitcher Street
Kalamazoo, Michigan

Date:
April 2009

APPENDIX C

DeLisle Associates LTD

Project Name: Goodwill Industries
Project Number: EN08-044
Location: 2700 N. Pitcher St., Kalamazoo, MI
Driller / Method: The Probe Geosampling - Direct Push
Surface: Concrete Floor - Inside Building

Soil Boring/Well ID: BH - 3
Date of Boring: 22-Oct-08
Boring Logged By: Andy Graham
Ground Elevation: Not Surveyed
Groundwater Depth: ~9.5 feet bgs

Depth (ft) Below Ground Surface (bgs)	Interval	Recovery (ft)	PID (ppm)	Soil/Material Description	Soil Type (USCS Symbol)	Other Information
0						
1	0-5'	3.5'	0.0	~ 6" of CONCRETE underlain by a stabilizer bed of block cinders.	Concr.	
2, 3			0.0	Gravelly SAND: Brown, loose, with large cobble sized cinder inclusions.	SP	
4, 5			1.7	Silty SAND: Brown, intermixed with clay.	SM	
6, 7, 8, 9	5-10'	3'	0.0	Silty SAND: With broken rock and cinder fragments from upper (1-5') interval.	SM	Φ
10				Gravelly SAND: Coarse grained, well sorted, moist.	SW	▼
11, 12, 13, 14, 15				Bottom of Boring: ~10 feet bgs.		

Notes / Remarks: ▼ = Approximate depth at which groundwater saturation is encountered.

Φ = Soil Sample EN08-044-08 collected from this stratum at ~9' bgs.

DeLisle Associates LTD

Project Name: Goodwill Industries
Project Number: EN08-044
Location: 2700 N. Pitcher St., Kalamazoo, MI
Driller / Method: The Probe Geosampling - Direct Push
Surface: Concrete Flooring - Inside Building

Soil Boring/Well ID: BH - 4
Date of Boring: 22-Oct-08
Boring Logged By: Andy Graham
Ground Elevation: Not Surveyed
Groundwater Depth: ~10 feet bgs

Depth (ft) Below Ground Surface (bgs)	Interval	Recovery (ft)	PID (ppm)	Soil/Material Description	Soil Type (USCS Symbol)	Other Information
0						
1	0-5'	5'	0.0	~6" of CONCRETE underlain by a bed of stabilized gravel.	Concr.	
2			2.9	Silty SAND: Brown, mottled, intermixed with clay.	SM	
3			10.9	SAND: Black, coarse grained, with cobble-sized rock and cinder inclusions.	SP	Φ
4			2.0	Silty SAND: Brown, mottled, intermixed with clay.	SM	
5						
6	5-10'	5'	0.2	Silty SAND: Brown, mottled, intermixed with clay, and with some large cobble-sized rock inclusions.	SM	
7						
8						
9						
10			0.0	Gravelly SAND: Coarse grained.	GP	▼
11				Bottom of Boring: ~10 feet bgs.		
12						
13						
14						
15						

Notes / Remarks: ▼ = Approximate depth at which groundwater saturation is encountered.

Φ = Soil Sample EN08-044-09 collected from this stratum at ~2.5' bgs.

DeLisle Associates LTD

Project Name: Goodwill Industries
Project Number: EN08-044
Location: 2700 N. Pitcher St., Kalamazoo, MI
Driller / Method: DeLisle / Hand Auger
Surface: Concrete Flooring - Inside Building

Soil Boring/Well ID: BH - 5
Date of Boring: 23-Oct-08
Boring Logged By: Andy Graham
Ground Elevation: Not Surveyed
Groundwater Depth: N/A (GW not encountered)

Depth (ft) Below Ground Surface (bgs)	Interval	Recovery (ft)	PID (ppm)	Soil/Material Description	Soil Type (USCS Symbol)	Other Information
0						
1	Continuous via Hand Auger	N/A	0.0	~6" of CONCRETE underlain by a bed of stabilized gravel and cinders.	Concr.	
2			0.0	Silty CLAY: Grayish-brown, mottled, with cinders.	CL	
3			0.0	Gravelly CLAY: Grayish-brown, mottled.	CL	Φ
4						
5				Bottom of Boring: ~4 feet bgs. (Refusal - Encountered Rocks)		
6						
7						
8						
9						
10						
11						
12						
13						
14						
15						

Notes / Remarks: Φ = Soil Sample EN08-044-10 collected from this stratum at ~3' bgs.

DeLisle Associates LTD

Project Name: Goodwill Industries
Project Number: EN08-044
Location: 2700 N. Pitcher St., Kalamazoo, MI
Driller / Method: The Probe Geosampling - Direct Push
Surface: Concrete Flooring - Inside Building

Soil Boring/Well ID: BH - 6
Date of Boring: 23-Oct-08
Boring Logged By: Andy Graham
Ground Elevation: Not Surveyed
Groundwater Depth: ~10 feet bgs

Depth (ft) Below Ground Surface (bgs)	Interval	Recovery (ft)	PID (ppm)	Soil/Material Description	Soil Type (USCS Symbol)	Other Information
0						
1	0-5'	5'	0.0	~6" of CONCRETE underlain by a bed of stabilized gravel and rocks.	Concr.	
2			0.0	Sandy CLAY: Black, with some rocks and cinders.	ML	
3			0.0	Silty CLAY: Brown.	CL	Φ
4			0.0	Silty CLAY: Dark gray.	CL	
5						
6	5-10'	5'	0.0	Silty CLAY: Brown.	CL	
7						
8			0.0	Silty SAND: Brown, poorly sorted.	SM	
9			0.0	Gravel: Light brown, poorly sorted, and containing large cobble-sized inclusions.	GP	
10			0.0	Gravel: Coarse grained, moist.	GP	▼
11				Bottom of Boring: ~10 feet bgs.		
12						
13						
14						
15						

Notes / Remarks: ▼ = Approximate depth at which groundwater saturation is encountered.

Φ = Soil Sample EN08-044-11 collected from this soil stratum at ~2.5' bgs.

DeLisle Associates LTD

Project Name: Goodwill Industries
Project Number: EN08-044
Location: 2700 N. Pitcher St., Kalamazoo, MI
Driller / Method: The Probe Geosampling - Direct Push
Surface: Concrete Flooring - Inside Building

Soil Boring/Well ID: BH - 7
Date of Boring: 23-Oct-08
Boring Logged By: Andy Graham
Ground Elevation: Not Surveyed
Groundwater Depth: ~10 feet bgs

Depth (ft) Below Ground Surface (bgs)	Interval	Recovery (ft)	PID (ppm)	Soil/Material Description	Soil Type (USCS Symbol)	Other Information
0						
1	0-5'	4'	0.0	~6" of CONCRETE underlain by a bed of stabilized gravel.	Concr.	
2			0.0	Silty SAND: Black, intermixed with cinders.	SP	
3			0.0	Gravelly SAND: Brown, find grained, poorly sorted.	SM	Φ
4			0.0	CINDERS: Black, buried layer of cinder fragments.	Cinders	
5			0.0	Silty CLAY: Dark gray.	CL	
6	5-10'	4'	0.0	CLAY: Dark gray to black, with cave-in material from upper strata.	CL	
7						
8						
9			0.0	Gravelly SAND: Brown, with rocks.	SP	
			0.0	CLAY: Brown	CL	
10			0.0	Gravelly SAND: Coarse, moist.	SP	▼
11				Bottom of Boring: ~10 feet bgs.		
12						
13						
14						
15						

Notes / Remarks: ▼ = Approximate depth at which groundwater saturation is encountered.

Φ = Soil Sample EN08-044-12 collected from this stratum at ~2.5' bgs.

DeLisle Associates LTD

Project Name: Goodwill Industries
Project Number: EN08-044
Location: 2700 N. Pitcher St., Kalamazoo, MI
Driller / Method: The Probe Geosampling - Direct Push
Surface: Concrete Flooring - Inside Building

Soil Boring/Well ID: BH - 8
Date of Boring: 23-Oct-08
Boring Logged By: Andy Graham
Ground Elevation: Not Surveyed
Groundwater Depth: ~10 feet bgs

Depth (ft) Below Ground Surface (bgs)	Interval	Recovery (ft)	PID (ppm)	Soil/Material Description	Soil Type (USCS Symbol)	Other Information
0						
1	0-5'	4.5'	0.0	~6" of CONCRETE underlain by a bed of stabilized gravel.	Concr.	
2			2.4	Loamy SAND: Black	SC	
3			2.2	SAND: Hardpan, compact.	SM	
4			48	Silty CLAY: Brown	ML	
5			48	CLAY: Gray	CL	Φ
6	5-10'	4.5'	NM	Cave-in material from upper strata.	CL	
7						
8				Sandy CLAY: Brown		
9				Gravelly SILT: With large rock inclusions.	ML	
				CLAY: Brown	CL	
10				GRAVEL: Moist	GP	▼
11				Bottom of Boring: ~10 feet bgs.		
12						
13						
14						
15						

Notes / Remarks: ▼ = Approximate depth at which groundwater saturation is encountered.

Φ = Soil Sample EN08-044-13 collected from this stratum at ~4.5' bgs.

NM = Parameter not measured.

DeLisle Associates LTD

Project Name: Goodwill Industries
Project Number: EN08-044
Location: 2700 N. Pitcher St., Kalamazoo, MI
Driller / Method: The Probe Geosampling - Direct Push
Surface: Concrete Flooring - Inside Building

Soil Boring/Well ID: BH - 9
Date of Boring: 23-Oct-08
Boring Logged By: Andy Graham
Ground Elevation: Not Surveyed
Groundwater Depth: ~10 feet bgs

Depth (ft) Below Ground Surface (bgs)	Interval	Recovery (ft)	PID (ppm)	Soil/Material Description	Soil Type (USCS Symbol)	Other Information
0						
1	0-5'	4.5'	0.0	~6" of CONCRETE underlain by a bed of stabilized gravel.	Concr.	
2			0.0	SAND: Brown, medium grained.	SW	
3			0.3	SAND: Black with cinders.	SP	
4			0.0	CLAY: Gray	CL	
5						
6	5-10'	4.5'	0.0	Cave-in Material from upper strata.	SW	
7			2.3	SAND: Brown, medium grained, loose.		Φ
8			0.0	CLAY: Brown, soft.	CL	
			0.0	CLAY: Brown, hard.	CL	
9			0.0	Gravelly SAND: Intermixed with some clay.	SM	
10			0.0	Gravelly CLAY: Brown.	CL	▼
//	//	//	//	End of Logged Section (~10' bgs). //	//	//
40						
				Bottom of Boring Extended to ~40' bgs.		

Notes / Remarks: ▼ = Approximate depth at which groundwater saturation is encountered.

Φ = Soil Sample EN08-044-14 collected from this stratum at ~7' bgs.

// = Indicates a discontinuation in the boring's scale and/or logged soil profile data.

DeLisle Associates LTD

Project Name: Goodwill Industries
Project Number: EN08-044
Location: 2700 N. Pitcher St., Kalamazoo, MI
Driller / Method: The Probe Geosampling - Direct Push
Surface: Concrete Pavement - Loading Dock

Soil Boring/Well ID: BH - 10
Date of Boring: 28-Oct-08
Boring Logged By: Andy Graham
Ground Elevation: Not Surveyed
Groundwater Depth: N/A (GW not encountered)

Depth (ft) Below Ground Surface (bgs)	Interval	Recovery (ft)	PID (ppm)	Soil/Material Description	Soil Type (USCS Symbol)	Other Information
0						
1	0-5'	2.5'	NM	~6" of CONCRETE underlain by a bed of stabilized gravel.	Concr.	
				Loamy SAND: Brown.	SM	
2, 3				SILT: Whitish-gray, intermixed with red bricks fragments and cinders.	ML	
4				Loamy SAND: Black, cohesive.	SC	Φ
				CLAY: Brown with rock inclusions.	CL	
5				Gravelly SAND: Coarse grained, some clay.	SP	
6, 7, 8, 9, 10, 11, 12, 13, 14, 15				Bottom of Boring: ~5 feet bgs.		

Notes / Remarks: Φ = Soil Sample EN08-044-17 collected from this stratum at ~4' bgs.

NM = Parameter not measured.

DeLisle Associates LTD

Project Name: Goodwill Industries
Project Number: EN08-044
Location: 2700 N. Pitcher St., Kalamazoo, MI
Driller / Method: The Probe Geosampling - Direct Push
Surface: Concrete Pad - Loading Dock Area

Soil Boring/Well ID: BH - 11
Date of Boring: 28-Oct-08
Boring Logged By: Andy Graham
Ground Elevation: Not Surveyed
Groundwater Depth: N/A (GW not encountered)

Depth (ft) Below Ground Surface (bgs)	Interval	Recovery (ft)	PID (ppm)	Soil/Material Description	Soil Type (USCS Symbol)	Other Information
0						
1	0-5'	2.5'	NM	~6" of CONCRETE underlain by a bed of stabilized gravel.	Concr.	
2				Loamy SAND: Black, cohesive.	SC	
3				CLAY: Gray, soft.	CL	
4				Silty SAND: Gravelly, mottled.	SM	Φ
5				Silty SAND: Gravelly, moist.	SM	
6				Bottom of Boring: ~5 feet bgs.		
7						
8						
9						
10						
11						
12						
13						
14						
15						

Notes / Remarks: Φ = Soil Sample EN08-044-18 collected from this stratum at ~4' bgs.

NM = Parameter not measured.

DeLisle Associates LTD

Project Name: Goodwill Industries
Project Number: EN08-044
Location: 2700 N. Pitcher St., Kalamazoo, MI
Driller / Method: The Probe Geosampling - Direct Push
Surface: Bare Soil - Loading Dock Area

Soil Boring/Well ID: BH - 12
Date of Boring: 28-Oct-08
Boring Logged By: Andy Graham
Ground Elevation: Not Surveyed
Groundwater Depth: N/A (GW not encountered)

Depth (ft) Below Ground Surface (bgs)	Interval	Recovery (ft)	PID (ppm)	Soil/Material Description	Soil Type (USCS Symbol)	Other Information
0						
1	0-5'	2.5'	NM	SAND: Slightly loamy, intermixed with gravel, no vegetation.	SP	
2				Loamy SAND: Black, cohesive.	SC	
3				CLAY: Gray, soft.	CL	
4				Silty SAND: Gravelly, mottled.	SM	Φ
5				Silty SAND: Gravelly, moist.	SM	
6				Bottom of Boring: ~5 feet bgs.		
7						
8						
9						
10						
11						
12						
13						
14						
15						

Notes / Remarks: Φ = Soil Sample EN08-044-19 collected from this stratum at ~4' bgs.

NM = Parameter not measured.

DeLisle Associates LTD

Project Name: Goodwill Industries
Project Number: EN08-044
Location: 2700 N. Pitcher St., Kalamazoo, MI
Driller / Method: The Probe Geosampling - Direct Push
Surface: Asphalt Pavement

Soil Boring/Well ID: BH - 13
Date of Boring: 28-Oct-08
Boring Logged By: Andy Graham
Ground Elevation: Not Surveyed
Groundwater Depth: ~10 feet bgs

Depth (ft) Below Ground Surface (bgs)	Interval	Recovery (ft)	PID (ppm)	Soil/Material Description	Soil Type (USCS Symbol)	Other Information
0						
1	0-5'	3'	NM	~4" of ASPHALT underlain by a bed of stabilized gravel.	Asph.	
2			0.0	GRAVEL: Intermixed with cobble-sized rocks, brick fragments, and debris.	GP	
			0.0	SAND: Gray, silty.	SM	
3			0.0	Silty SAND: Brownish -gray, mottled.	SM	Φ
4			0.0	Silty CLAY: Brown with some rocks.	CL	
5			0.0	CLAY: Brown, with gravel and some larger pebble to cobble sized rocks.	CL	
6	5-10'	3.5'	NM	Silty SAND: Brown.	SM	
7			NM	SAND: Grayish-brown, intermixed with silt and clay.	SC	
8			NM	SAND: Black, dry.	SW	
9			0.0	Gravelly SAND: Brown, poorly-sorted, moist.	SP	▼
10						
//	//	//	//	End of Logged Section (~10' bgs). //	//	//
40						
				Bottom of Boring Extended to ~40' bgs.		

Notes / Remarks: ▼ = Approximate depth at which groundwater saturation is encountered.
Φ = Soil Sample EN08-044-20 collected from this stratum at ~3.5' bgs.
// = Indicates a discontinuation in the boring's scale and/or logged soil profile data.
NM = Parameter not measured.

DeLisle Associates LTD

Project Name: Goodwill Industries
Project Number: EN08-044
Location: 2700 N. Pitcher St., Kalamazoo, MI
Driller / Method: The Probe Geosampling - Direct Push
Surface: Asphalt Pavement

Soil Boring/Well ID: BH - 16
Date of Boring: 28-Oct-08
Boring Logged By: Andy Graham
Ground Elevation: Not Surveyed
Groundwater Depth: N/A (GW not encountered)

Depth (ft) Below Ground Surface (bgs)	Interval	Recovery (ft)	PID (ppm)	Soil/Material Description	Soil Type (USCS Symbol)	Other Information
0						
1	0-5'	3'	NM	~4" of ASPHALT underlain by a bed of stabilized gravel.	Asph.	
2			NM	SAND: Brown, medium grained, well sorted, possibly fill material.	SW	
3			0.0	CLAY: Black, with silt and sand.	ML	
			0.0	GRAVEL: Large grained, rocky.	GW	
4			0.0	CLAY: Black, organic-rich, with some silt.	OL	Φ
5			0.0	CLAY: Intermixed with gravel.	CL	
6				Bottom of Boring: ~5 feet bgs.		
7						
8						
9						
10						
11						
12						
13						
14						
15						

Notes / Remarks: Φ = Soil Sample EN08-044-30 collected from this stratum at ~3.5' bgs.

NM = Parameter not measured.

DeLisle Associates LTD

Project Name: Goodwill Industries
Project Number: EN08-044
Location: 2700 N. Pitcher St., Kalamazoo, MI
Driller / Method: The Probe Geosampling - Direct Push
Surface: Grass Vegetation

Soil Boring/Well ID: BH - 17
Date of Boring: 28-Oct-08
Boring Logged By: Andy Graham
Ground Elevation: Not Surveyed
Groundwater Depth: N/A (GW not encountered)

Depth (ft) Below Ground Surface (bgs)	Interval	Recovery (ft)	PID (ppm)	Soil/Material Description	Soil Type (USCS Symbol)	Other Information
0						
1	0-5'	3'	NM	SAND: Loamy, with abundant grass vegetation roots.	SM	
2, 3			0.0	SAND: Brown, slightly gravelly.	SP	
4			0.0	CLAY: Dark gray - black, with some rocks.	CL	
5			0.0	Gravelly SAND: Poorly sorted, with some clay, becoming moist.	SP	Φ
6, 7, 8, 9, 10, 11, 12, 13, 14, 15				Bottom of Boring: ~5 feet bgs.		

Notes / Remarks: Φ = Soil Sample EN08-044-31 collected from this stratum at ~4.5' bgs.

NM = Parameter not measured.

DeLisle Associates LTD

Project Name: Goodwill Industries
Project Number: EN08-101
Location: 2700 N. Pitcher, Kalamazoo, MI
Driller / Method: DeLisle / Hand Auger
Surface: Concrete Floor - Building Interior

Soil Boring/Well ID: BH - 19
Date of Boring: 29-Dec-08
Boring Logged By: Bobby Glasser
Ground Elevation: N/A (Not Surveyed)
Groundwater Depth: N/A (GW Not Encountered)

Depth (ft) Below Ground Surface (bgs)	Interval	Recovery (ft)	PID (ppm)	Soil/Material Description	Soil Type (USCS Symbol)	Other Information
0						
1	Continuous	N/A	NM	CONCRETE Flooring	Concr.	
2				SAND: Brown, loamy-fine, dry, with brick fragments and clinker inclusions.	SC	
3				SAND: Dark grayish-brown, slightly sticky, with some clay, and occasional gravel-sized inclusions.	SP	Φ
4						
5				Bottom of Boring / Refusal: ~4 feet bgs. (Encountered Impenetrable Object)		
6						
7						
8						
9						
10						
11						
12						
13						
14						
15						

Notes / Remarks: Φ = Soil Sample EN08-101-39 collected from this stratum at ~3' bgs.

NM = Parameter not measured.

DeLisle Associates LTD

Project Name: Goodwill Industries
Project Number: EN08-101
Location: 2700 N. Pitcher, Kalamazoo, MI
Driller / Method: DeLisle / Hand Auger
Surface: Concrete Floor - Building Interior

Soil Boring/Well ID: BH - 20
Date of Boring: 29-Dec-08
Boring Logged By: Bobby Glasser
Ground Elevation: N/A (Not Surveyed)
Groundwater Depth: N/A (GW Not Encountered)

Depth (ft) Below Ground Surface (bgs)	Interval	Recovery (ft)	PID (ppm)	Soil/Material Description	Soil Type (USCS Symbol)	Other Information
0						
1	Continuous	N/A	NM	CONCRETE: Flooring	Concr.	
2				SAND: Brown, loamy-fine, dry, with brick fragments and clinker inclusions.	SC	
3				SAND: Dark grayish-brown, slightly sticky, with some clay, and occasional gravel-sized inclusions.	SP	
4				SAND: Very dark brown - black, coarse grained, gritty, moist, sticky, with some clay, and a distinct odor.	SP	Φ
5						
6				Bottom of Boring: ~5 feet bgs.		
7						
8						
9						
10						
11						
12						
13						
14						
15						

Notes / Remarks: Φ = Soil Sample EN08-101-40 collected from this stratum at ~3.5' bgs.

NM = Parameter not measured.

DeLisle Associates LTD

Project Name: Goodwill Industries
Project Number: EN08-101
Location: 2700 N. Pitcher, Kalamazoo, MI
Driller / Method: DeLisle / Hand Auger
Surface: Concrete Floor - Building Interior

Soil Boring/Well ID: BH - 21
Date of Boring: 29-Dec-08
Boring Logged By: Bobby Glasser
Ground Elevation: N/A (Not Surveyed)
Groundwater Depth: N/A (GW Not Encountered)

Depth (ft) Below Ground Surface (bgs)	Interval	Recovery (ft)	PID (ppm)	Soil/Material Description	Soil Type (USCS Symbol)	Other Information
0						
1	Continuous	N/A	NM	CONCRETE: Flooring	Concr.	
2				SAND: Brown, loamy-fine, dry, with brick fragments and clinker inclusions.	SC	
3				SAND: Dark grayish-brown, slightly sticky, with some clay, and gravel inclusions.	SP	
4				SAND: Very dark brown - black, moist, sticky, with silt and clay, some gravel inclusions, and a distinct odor.	SC	Φ
5						
6				Bottom of Boring: ~5 feet bgs.		
7						
8						
9						
10						
11						
12						
13						
14						
15						

Notes / Remarks: Φ = Soil Sample EN08-101-41 collected from this stratum at ~3.5' bgs.

NM = Parameter not measured.

APPENDIX D

GROUNDWATER MONITORING WELL LOG

PROJECT NAME:	Goodwill Industries	WELL ID:	MW-5
PROJECT NUMBER:	EN08-044	WELL DIAMETER:	2-inch
SITE LOCATION:	2700 N. Pitcher St., Kalamazoo, MI	CASING MATERIAL:	Sch-40 PVC
DATE INSTALLED:	October 22, 2008	SCREEN LENGTH:	5-foot
DRILLER/METHOD:	The Probe Geosampling - Direct Push	GROUND ELEVATION:	761.14'
SURFACE:	Asphalt Pavement	TOC ELEVATION:	760.87'
LOGGED BY:	Bobby Glasser (DeLisle)	SWL (from TOC):	~ 6.5'

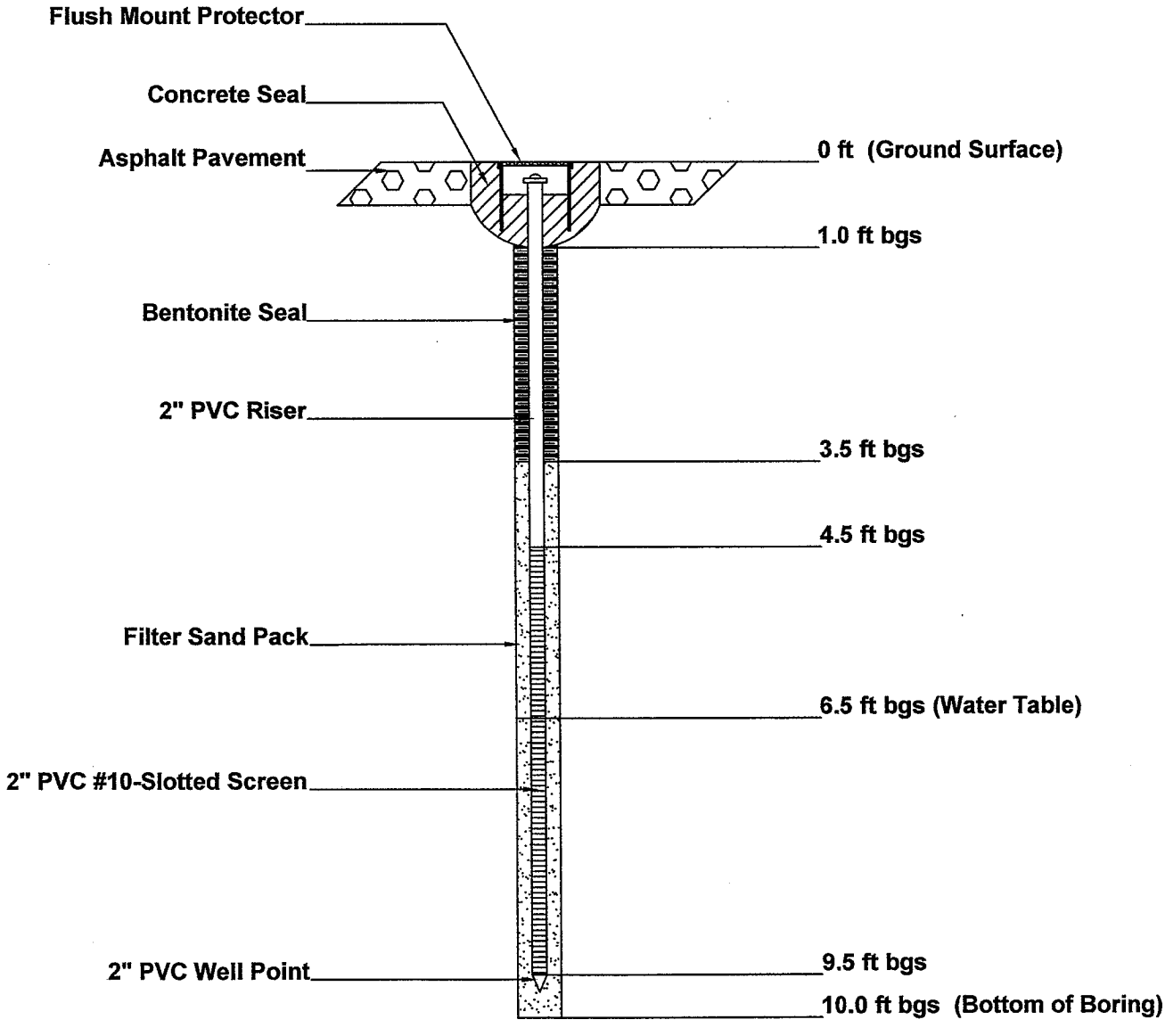

Well ID: MW-5	DeLisle Associates LTD	Project No. EN08-044

GROUNDWATER MONITORING WELL LOG

PROJECT NAME:	Goodwill Industries	WELL ID:	MW-6
PROJECT NUMBER:	EN08-044	WELL DIAMETER:	2-inch
SITE LOCATION:	2700 N. Pitcher St., Kalamazoo, MI	CASING MATERIAL:	Galvanized Steel
DATE INSTALLED:	October 23, 2008	SCREEN LENGTH:	5-foot
DRILLER/METHOD:	The Probe Geosampling - Direct Push	GROUND ELEVATION:	764.32'
SURFACE:	Poured Concrete Flooring	TOC ELEVATION:	764.06'
LOGGED BY:	Bobby Glasser (DeLisle)	SWL (from TOC):	~ 9.5'

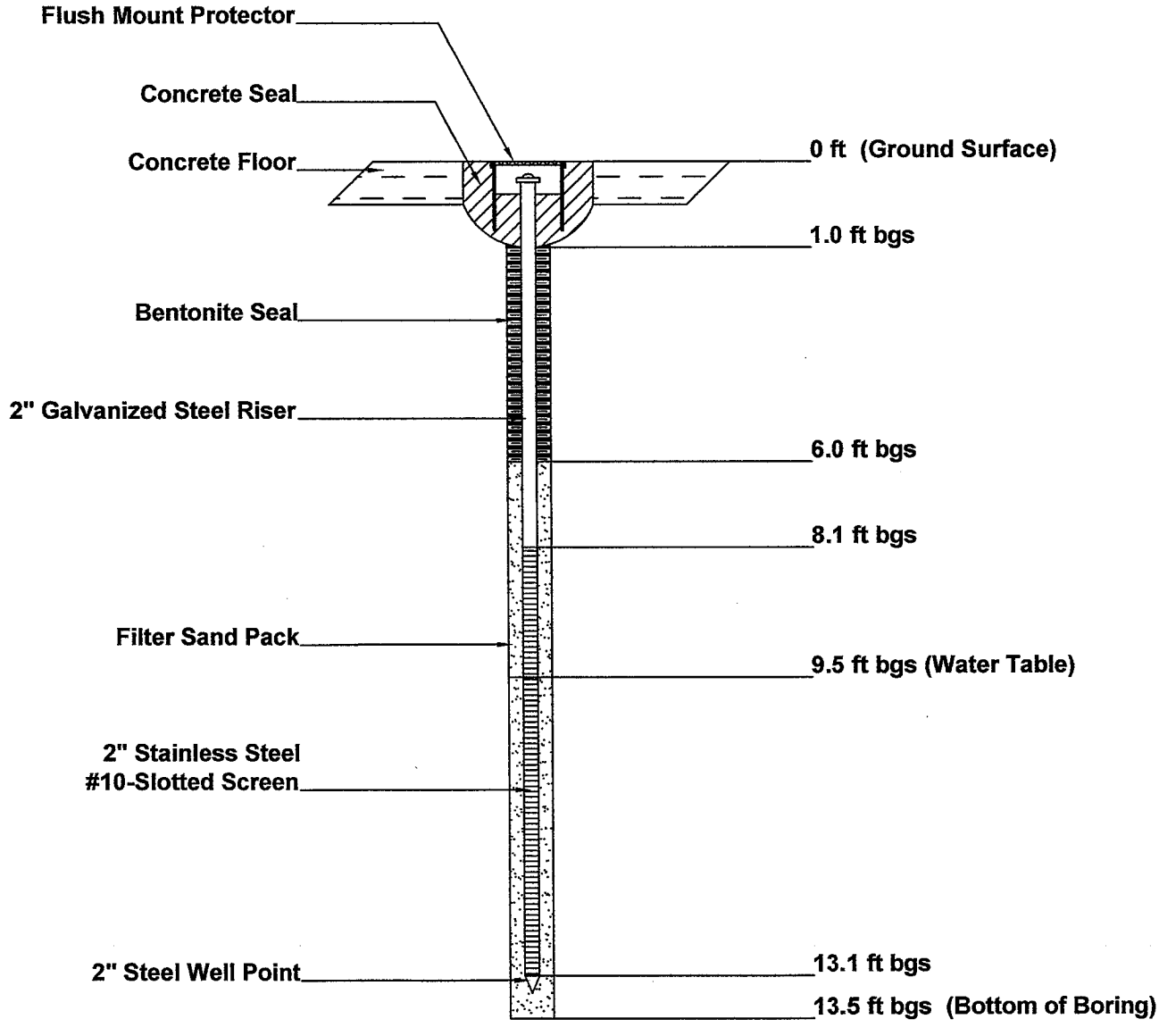

Well ID: MW-6	DeLisle Associates LTD	Project No. EN08-044

GROUNDWATER MONITORING WELL LOG

PROJECT NAME: Goodwill Industries
PROJECT NUMBER: EN08-044
SITE LOCATION: 2700 N. Pitcher St., Kalamazoo, MI
DATE INSTALLED: October 28, 2008
DRILLER/METHOD: The Probe Geosampling - Direct Push
SURFACE: Grass Lawn
LOGGED BY: Bobby Glasser (DeLisle)

WELL ID: MW-7
WELL DIAMETER: 2-inch
CASING MATERIAL: Galvanized Steel
SCREEN LENGTH: 5-foot
GROUND ELEVATION: 761.59'
TOC ELEVATION: 761.35'
SWL (from TOC): ~ 6.5'

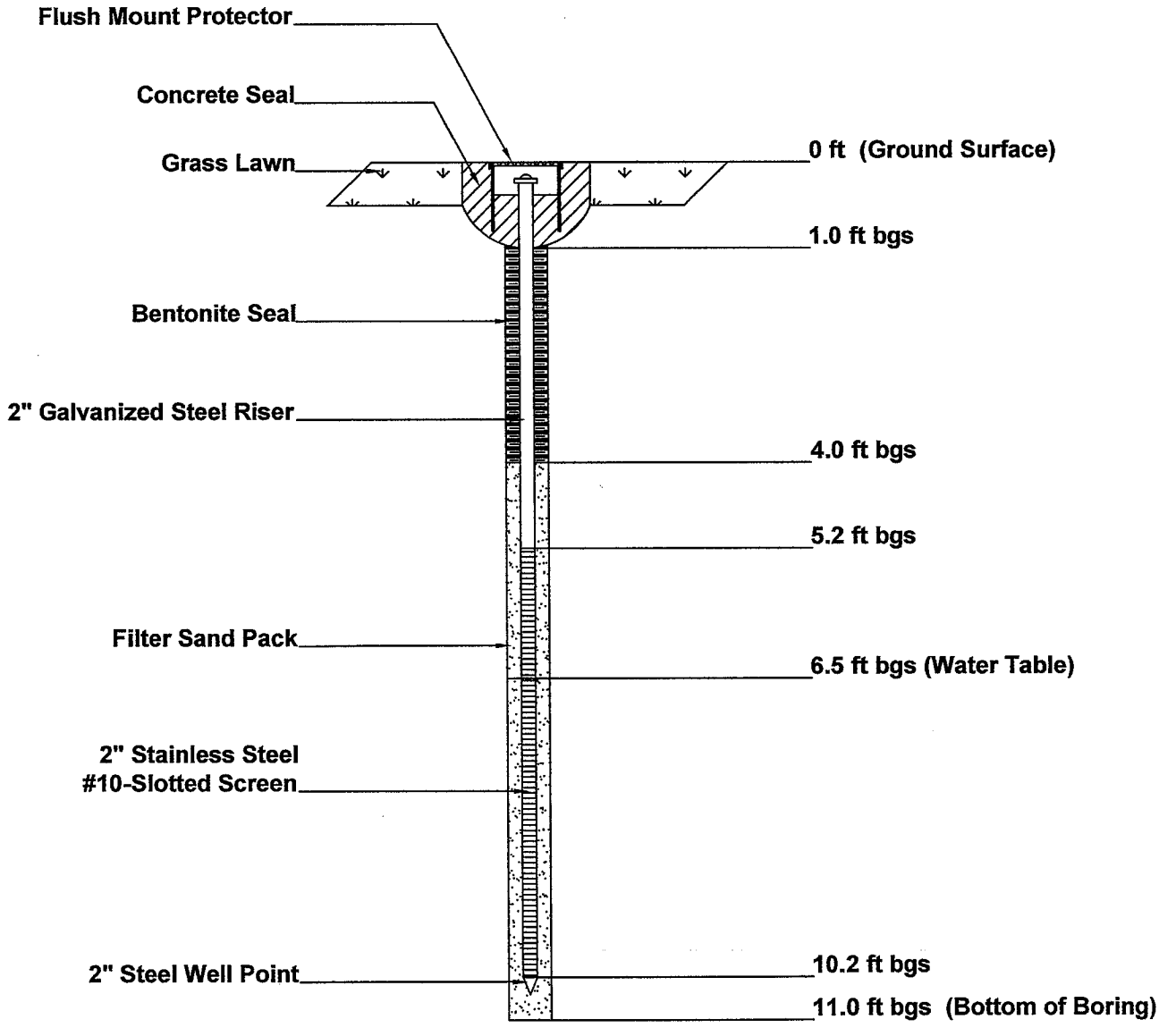

Well ID: MW-7	DeLisle Associates LTD	Project No. EN08-044

GROUNDWATER MONITORING WELL LOG

PROJECT NAME:	Goodwill Industries	WELL ID:	MW-8
PROJECT NUMBER:	EN08-044	WELL DIAMETER:	2-inch
SITE LOCATION:	2700 N. Pitcher St., Kalamazoo, MI	CASING MATERIAL:	Galvanized Steel
DATE INSTALLED:	October 29, 2008	SCREEN LENGTH:	5-foot
DRILLER/METHOD:	The Probe Geosampling - Direct Push	GROUND ELEVATION:	760.50'
SURFACE:	Grass Lawn	TOC ELEVATION:	760.06'
LOGGED BY:	Bobby Glasser (DeLisle)	SWL (from TOC):	~ 5.0'

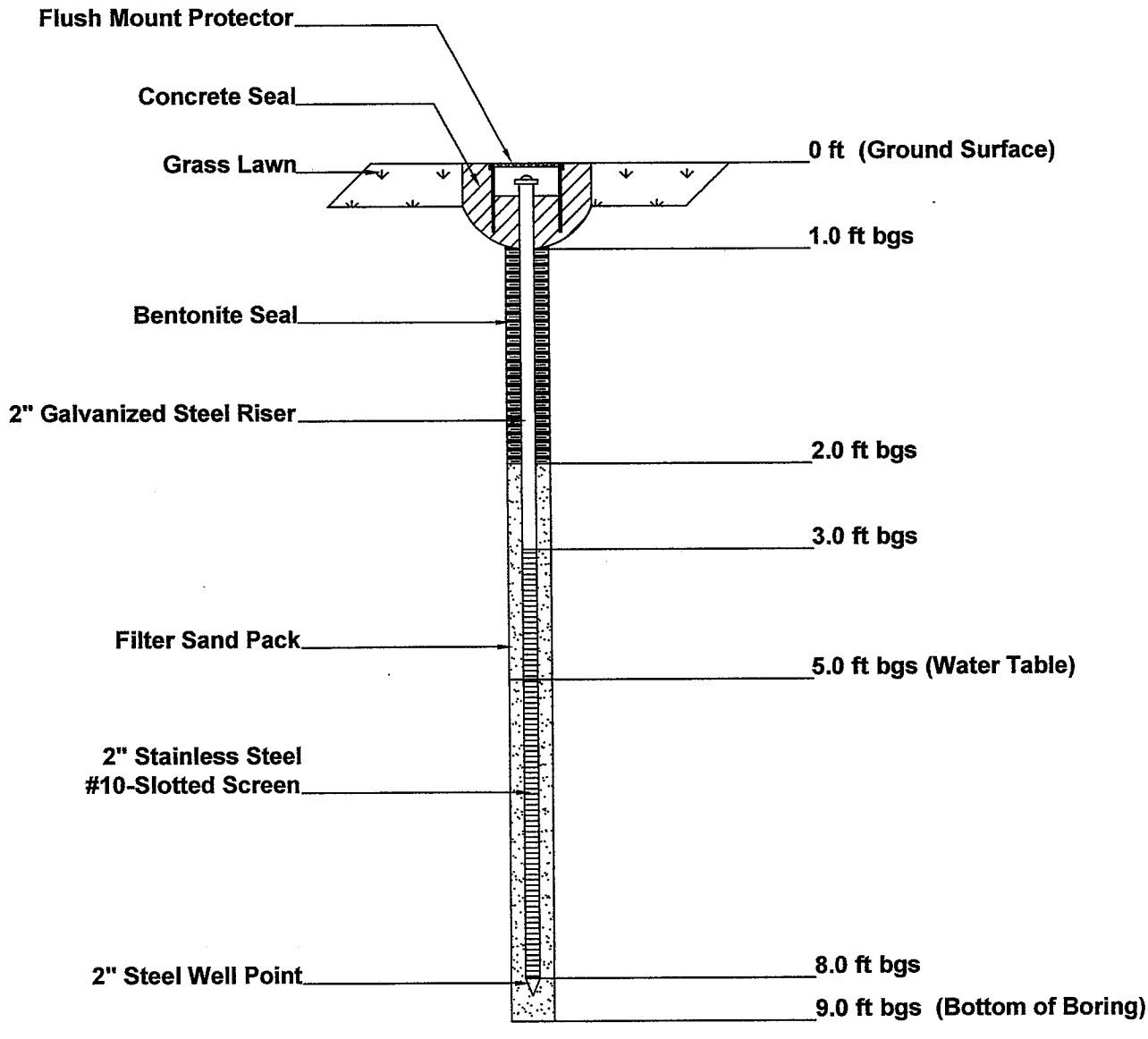

Well ID: MW-8	**DeLisle Associates LTD**	Project No. EN08-044

GROUNDWATER MONITORING WELL LOG

PROJECT NAME: Goodwill Industries
PROJECT NUMBER: EN08-044
SITE LOCATION: 2700 N. Pitcher St., Kalamazoo, MI
DATE INSTALLED: October 29, 2008
DRILLER/METHOD: The Probe Geosampling - Direct Push
SURFACE: Grass Lawn
LOGGED BY: Bobby Glasser (DeLisle)

WELL ID: MW-9
WELL DIAMETER: 2-inch
CASING MATERIAL: Galvanized Steel
SCREEN LENGTH: 5-foot
GROUND ELEVATION: 759.40'
TOC ELEVATION: 758.98'
SWL (from TOC): ~ 5.0'

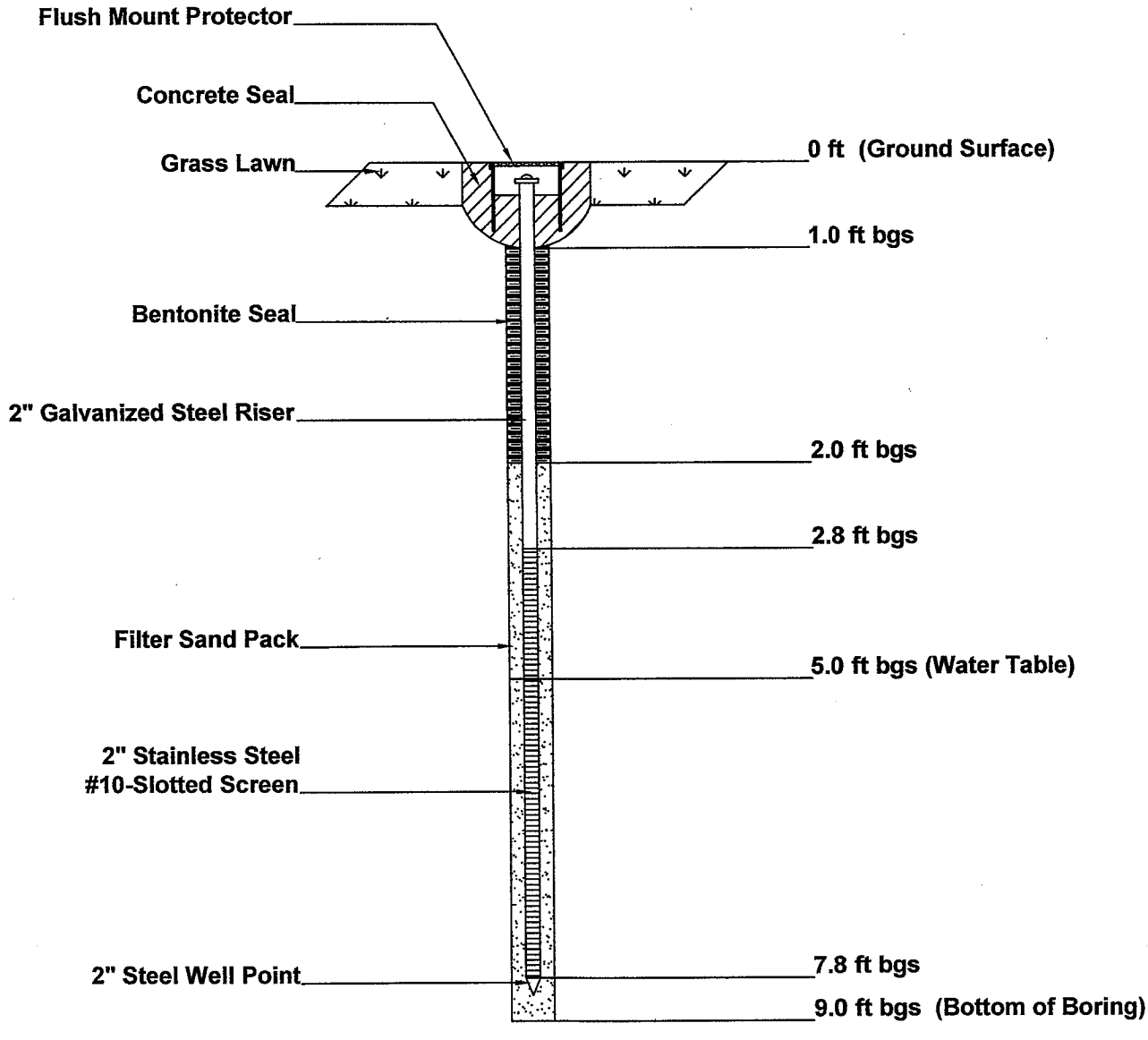

Well ID: MW-9	DeLisle Associates LTD	Project No. EN08-044

APPENDIX E

Table 3 - Analytical Results: Soil

Volatiles (VOCs) by GC/MS (5035) (µg/Kg) - EPA Method Reference SW8260B

MDEQ Part 201 Residential & Commercial I Generic Cleanup Criteria & Screening Levels

Substance		Soil Boring / Soil Sample Location															Groundwater Protection			Indoor Air	Ambient Air				Direct Contact	
Chemical Name	CAS#	BH-3	BH-4	BH-5	BH-6	BH-7	BH-8	BH-9	BH-10	BH-11	BH-12	BH-13	BH-16	BH-17	BH-19	BH-20	DWPC	GSIPC	GCPC	SVIIC	VSIC (IS)	VSIC (5M)	VSIC (2M)	PSIC	DCC	C_{SAT}
Bromomethane	74839	ND	ND	ND	ND	ND	ND	ND	ND	ND	ND	ND	ND	ND	ND	ND	200	700	1.4E+6	860	11,000	57,000	1.4E+5	3.3E+8	3.2E+5	2.2E+6
cis-DCE	156592	ND	ND	ND	ND	ND	ND	ND	ND	ND	ND	ND	ND	ND	ND	ND	1,400	12,000	6.4E+5	22,000	1.8E+5	4.2E+5	9.9E+5	2.3E+9	6.4E+5	6.4E+5
PCE	127184	310	280,000	ND	2,000	82	61,000	940	ND	ND	810	ND	ND	160	2,100	690,000	100	900	88,000	11,000	1.8E+5	4.8E+5	1.1E+6	5.4E+9	88,000	88,000
TCE	79016	ND	ND	ND	ND	ND	2,500	ND	ND	ND	ND	ND	ND	ND	110	480	100	4,000	4.4E+5	7,100	78,000	1.7E+5	3.9E+5	1.8E+9	5.0E+5	5.0E+5
1,2,4-TMB	95636	ND	250	ND	ND	ND	110	ND	ND	ND	ND	ND	ND	ND	ND	140	2,100	570	1.1E+5	1.1E+5	2.1E+7	5.0E+8	5.0E+8	8.2E+10	1.1E+5	1.1E+5
1,3,5-TMB	108678	ND	120	ND	ND	ND	ND	ND	ND	ND	ND	ND	ND	ND	ND	80	1,800	1,100	94,000	94,000	1.6E+7	3.8E+8	3.8E+8	8.2E+10	94,000	94,000
Toluene	108883	ND	ND	ND	ND	ND	ND	ND	ND	ND	ND	ND	ND	ND	ND	ND	16,000	2,800	2.5E+5	2.5E+5	2.8E+6	5.1E+6	1.2E+7	2.7E+10	2.5E+5	2.5E+5
Xylenes (total)	1330207	ND	230	ND	ND	ND	ND	ND	ND	ND	ND	ND	ND	ND	ND	ND	5,600	700	1.5E+5	1.5E+5	4.6E+7	6.1E+7	1.3E+8	2.9E+11	1.5E+5	1.5E+5

cis-DCE = cis-1,2-Dichloroethylene PCE = Tetrachloroethylene TCE = Trichloroethylene 1,2,4-TMB = 1,2,4-Trimethylbenzene 1,3,5-TMB = 1,3,5-Trimethylbenzene

ND = Parameter concentration is below the analytical Method Detection Level (MDL) or Practical Quantitaion Limit (PQL) and reported as "Non-Detect".

[ ] = Parameter concentration exceeds one (1) or more applicable MDEQ Part 201 criteria for soil.

Table 3 - Analytical Results: Soil (Continued)

Volatiles (VOCs) by GC/MS (5035) (µg/Kg) - EPA Method Reference SW8260B

MDEQ Part 201 Residential & Commercial I Generic Cleanup Criteria & Screening Levels

Substance		Soil Boring / Soil Sample Location								Groundwater Protection			Indoor Air	Ambient Air				Direct Contact	
Chemical Name	CAS#	BH-21	BH-22	BH-23	BH-24	BH-25	BH-26	BH-27	BH-28	DWPC	GSIPC	GCPC	SVIIC	VSIC (IS)	VSIC (5M)	VSIC (2M)	PSIC	DCC	C_{SAT}
Bromomethane	74839	ND	630	1,300	930	240	660	790	700	200	700	1.4E+6	860	11,000	57,000	1.4E+5	3.3E+8	3.2E+5	2.2E+6
cis-DCE	156592	ND	ND	ND	ND	ND	ND	ND	ND	1,400	12,000	6.4E+5	22,000	1.8E+5	4.2E+5	9.9E+5	2.3E+9	6.4E+5	6.4E+5
PCE	127184	230,000	300	540	7,800	120	ND	160	ND	100	900	88,000	11,000	1.8E+5	4.8E+5	1.1E+6	5.4E+9	88,000	88,000
TCE	79016	6,700	ND	ND	ND	ND	ND	ND	ND	100	4,000	4.4E+5	7,100	78,000	1.7E+5	3.9E+5	1.8E+9	5.0E+5	5.0E+5
1,2,4-TMB	95636	190	ND	ND	ND	ND	ND	ND	ND	2,100	570	1.1E+5	1.1E+5	2.1E+7	5.0E+8	5.0E+8	8.2E+10	1.1E+5	1.1E+5
1,3,5-TMB	108678	110	ND	ND	ND	ND	ND	ND	ND	1,800	1,100	94,000	94,000	1.6E+7	3.8E+8	3.8E+8	8.2E+10	94,000	94,000
Toluene	108883	ND	ND	130	ND	ND	ND	ND	ND	16,000	2,800	2.5E+5	2.5E+5	2.8E+6	5.1E+6	1.2E+7	2.7E+10	2.5E+5	2.5E+5
Xylenes (total)	1330207	ND	ND	110	ND	ND	ND	ND	ND	5,600	700	1.5E+5	1.5E+5	4.6E+7	6.1E+7	1.3E+8	2.9E+11	1.5E+5	1.5E+5

cis-DCE = cis-1,2-Dichloroethylene PCE = Tetrachloroethylene TCE = Trichloroethylene 1,2,4-TMB = 1,2,4-Trimethylbenzene 1,3,5-TMB = 1,3,5-Trimethylbenzene

ND = Parameter concentration is below the analytical Method Detection Level (MDL) or Practical Quantitaion Limit (PQL) and reported as "Non-Detect".

[ ] = Parameter concentration exceeds one (1) or more applicable MDEQ Part 201 criteria for soil.

APPENDIX F

BIO-CHEM
ENVIRONMENTAL
ANALYTICAL
LABORATORIES

1049 - 28th Street SE
Grand Rapids, MI 49508
Ph: 616/248-4900
Toll Free: 800/362-LABS
Fax: 616/248-4904

October 31, 2008

Andy Graham
DeLisle Associates Ltd.
5050 Sprinkle Rd.
Portage, MI 49002

TEL: (269) 373-4500
FAX (616) 373-1044

RE: Goodwill

Dear Andy Graham:

Order No.: 0810221

BIO-CHEM Laboratories, Inc. received 16 samples on 10/24/2008 for the analyses presented in the following report.

There were no problems with the analyses and all data for associated QC met EPA or laboratory specifications except where noted in the Case Narrative.

If you have any questions regarding these tests results, please feel free to call.

Please note that unless otherwise instructed, residual samples will be held for sixty (60) days from the original report date. At that time, all non-hazardous samples will be disposed of in accordance with federal, state and local regulations and ordinances, and hazardous samples shall be returned to you. Please contact the laboratory within thirty (30) days if other arrangements for sample retention need to be made.

Sincerely,

Cindy Euwema

Cindy Euwema
Office Manager

Working with you to ensure a better tomorrow.

Bic Chem LABORATORIES, INC.
1049 28th Street SE • Grand Rapids, MI 49508
Ph: (616) 248-4900 • Toll Free: 800-362-LABS
Fax: (616) 248-4904

Chain of Custody

P.O. # 08-319

Project Number	EN08-044
Date	10.22.08
Date Due	
Firm Name	Delisle Associates LTD
Turn around time	standard
Firm Address	5050 Sprinkle Rd
Project Name	Goodwill Industries
City, State, Zip	Portage, MI 49002
State Samples Taken From	
Phone	269 373-4500
Fax	269-373-1044
Contact Person	Andy Graham

Item No	Lab I.D.	Client Sample Number	Date Taken	Time Taken	Sample Description (sample type: water, soil, other)	Number of Containers	Analysis Desired (One per line) VOCs (8260)								Remarks
1	01	EN08-044-01	10.22.08	1100	Ground Water	2	X								
2	02	EN08-044-02	"	1133	"	2	X								
3	03	EN08-044-03	"	1155	"	2	X								
4	04	EN08-044-04	"	1247	"	2	X								
5	05	EN08-044-05	"	1335	"	2	X								
6	06	EN08-044-06	"	1357	"	2	X								
7	07	EN08-044-07	"	1413	"	2	X								
8	(10)	EN08-044-08	"	1545	Soil	~~1~~ 2	X								Field 10 mm CH methanol preservable
9	(11)	EN08-044-09	10.22.08 ~~10.23.08~~	1610	Soil	~~1~~ 2	X								"
10	(12)	EN08-044-10	10.23.08	940	Soil	~~1~~ 2	X								"

Released by	Received by	Date	Time
[signature]	[signature]	10.24.08	1:30

Laboratory use only

☐ Blue Ice _____°

☐ Regular Ice

☐ No Coolant

FRANKLIN PRESS 45267 2/08

Bic Chem LABORATORIES, INC.
1049 28th Street SE • Grand Rapids, MI 49508
Ph: (616) 248-4900 • Toll Free: 800-362-LABS
Fax: (616) 248-4904

Chain of Custody

P.O. # 08-319

Project Number	EN08-044
Date	10-23-08
Date Due	
Firm Name	Delisle Associates
Turn around time	STD
Firm Address	5050 Sprinkle
Project Name	Goodwill
City, State, Zip	Portage, MI 49002
State Samples Taken From	
Phone	373-4500
Fax	373-1044
Contact Person	Andy Graham

Item No	Lab I.D.	Client Sample Number	Date Taken	Time Taken	Sample Description (sample type: water, soil, other)	Number of Containers	Analysis Desired (One per line) VOC (8260)								Remarks
1	(13)	EN08-044-11	10-23-08	1100	Soil	1/2	X								Field Methanol Preservative
2	(14)	EN08-044-12	↓	1135	Soil	1/2	X								"
3	(15)	EN08-044-13	↓	1200	Soil	1/2	X								"
4	(16)	EN08-044-14	↓	1215	Soil	1/2	X								"
5	08	EN08-044-15	↓	1248	Groundwater	2	X								
6	09	EN08-044-16	10-23-08	1315	Groundwater	2	X								
7															
8															
9															
10															

Released by	Received by	Date	Time
[signature]	[signature]	10-23-08	1:30

Laboratory use only

☐ Blue Ice _____°

☒ Regular Ice

☐ No Coolant

FRANKLIN PRESS 45267 2/06

BIO-CHEM Laboratories, Inc.

Date: *31-Oct-08*

CLIENT: DeLisle Associates Ltd.
Project: Goodwill
Lab Order: 0810221

Work Order Sample Summary

Lab Sample ID	Client Sample ID	Matrix	Collection Date	Date Received
0810221-01A	EN08-044-01	Aqueous	10/22/2008	10/24/2008
0810221-02A	EN08-044-02	Aqueous	10/22/2008	10/24/2008
0810221-03A	EN08-044-03	Aqueous	10/22/2008	10/24/2008
0810221-04A	EN08-044-04	Aqueous	10/22/2008	10/24/2008
0810221-05A	EN08-044-05	Aqueous	10/22/2008	10/24/2008
0810221-06A	EN08-044-06	Aqueous	10/22/2008	10/24/2008
0810221-07A	EN08-044-07	Aqueous	10/22/2008	10/24/2008
0810221-08A	EN08-044-15	Aqueous	10/23/2008	10/24/2008
0810221-09A	EN08-044-16	Aqueous	10/23/2008	10/24/2008
0810221-10A	EN08-044-08	Soil	10/22/2008	10/24/2008
0810221-11A	EN08-044-09	Soil	10/22/2008	10/24/2008
0810221-12A	EN08-044-10	Soil	10/23/2008	10/24/2008
0810221-13A	EN08-044-11	Soil	10/23/2008	10/24/2008
0810221-14A	EN08-044-12	Soil	10/23/2008	10/24/2008
0810221-15A	EN08-044-13	Soil	10/23/2008	10/24/2008
0810221-16A	EN08-044-14	Soil	10/23/2008	10/24/2008

BIO-CHEM Laboratories, Inc. Date: *31-Oct-08*

CLIENT: DeLisle Associates Ltd.
Project: Goodwill
Lab Order: 0810221

CASE NARRATIVE

Samples are routinely analyzed using methods outlined in the following references:

(SW) Test Methods for Evaluating Solid Waste, Physical/Chemical Methods, SW846, 3rd Ed.
(E) Methods for Chemical Analysis of Water and Wastes, EPA-600/4-79-020.
(A) Standard Methods for the Examination of Water and Wastewater, APHA, 18th Ed.
(D) Annual Book of ASTM Standards.

Specific methods utilized for this project are provided in the analytical report and are identified by the reference document abbreviation ( ) followed by the method number.

All QA/QC and sample analyses met method, laboratory and/or regulatory data quality objectives unless otherwise specified below.

No data qualifications required.

BIO-CHEM Laboratories, Inc.

Date: *10/31/2008*

ANALYTICAL REPORT

CLIENT: DeLisle Associates Ltd.
Lab Order: 0810221
Project: Goodwill
Lab Sample ID: 0810221-01A

Project Number: EN08-044
Client Sample ID: EN08-044-01
Collection Date: 10/22/2008
Matrix: AQUEOUS

Analyses	Method Ref.	Result	Q	PQL	Units	DF	Analyst	Date
Volatiles by GC/MS								
1. 1,1,1-Trichloroethane	SW8260B	< 1.0		1.0	µg/L	1	GCP	10/26/2008
2. 1,1,2,2-Tetrachloroethane	SW8260B	< 1.0		1.0	µg/L	1	GCP	10/26/2008
3. 1,1,2-Trichloroethane	SW8260B	< 1.0		1.0	µg/L	1	GCP	10/26/2008
4. 1,1-Dichloroethane	SW8260B	< 1.0		1.0	µg/L	1	GCP	10/26/2008
5. 1,1-Dichloroethene	SW8260B	< 1.0		1.0	µg/L	1	GCP	10/26/2008
6. 1,2,4-Trimethylbenzene	SW8260B	< 1.0		1.0	µg/L	1	GCP	10/26/2008
7. 1,2-Dibromoethane	SW8260B	< 1.0		1.0	µg/L	1	GCP	10/26/2008
8. 1,2-Dichlorobenzene	SW8260B	< 1.0		1.0	µg/L	1	GCP	10/26/2008
9. 1,2-Dichloroethane	SW8260B	< 1.0		1.0	µg/L	1	GCP	10/26/2008
10. 1,2-Dichloropropane	SW8260B	< 1.0		1.0	µg/L	1	GCP	10/26/2008
11. 1,3,5-Trimethylbenzene	SW8260B	< 1.0		1.0	µg/L	1	GCP	10/26/2008
12. 1,3-Dichlorobenzene	SW8260B	< 1.0		1.0	µg/L	1	GCP	10/26/2008
13. 1,4-Dichlorobenzene	SW8260B	< 1.0		1.0	µg/L	1	GCP	10/26/2008
14. Benzene	SW8260B	< 1.0		1.0	µg/L	1	GCP	10/26/2008
15. Bromodichloromethane	SW8260B	< 1.0		1.0	µg/L	1	GCP	10/26/2008
16. Bromoform	SW8260B	< 1.0		1.0	µg/L	1	GCP	10/26/2008
17. Bromomethane	SW8260B	< 1.0		1.0	µg/L	1	GCP	10/26/2008
18. Carbon tetrachloride	SW8260B	< 1.0		1.0	µg/L	1	GCP	10/26/2008
19. Chlorobenzene	SW8260B	< 1.0		1.0	µg/L	1	GCP	10/26/2008
20. Chloroethane	SW8260B	< 1.0		1.0	µg/L	1	GCP	10/26/2008
21. Chloroform	SW8260B	< 1.0		1.0	µg/L	1	GCP	10/26/2008
22. Chloromethane	SW8260B	< 1.0		1.0	µg/L	1	GCP	10/26/2008
23. cis-1,2-Dichloroethene	SW8260B	< 1.0		1.0	µg/L	1	GCP	10/26/2008
24. cis-1,3-Dichloropropene	SW8260B	< 1.0		1.0	µg/L	1	GCP	10/26/2008
25. Dibromochloromethane	SW8260B	< 1.0		1.0	µg/L	1	GCP	10/26/2008
26. Ethylbenzene	SW8260B	< 1.0		1.0	µg/L	1	GCP	10/26/2008
27. m,p-Xylene	SW8260B	< 2.0		2.0	µg/L	1	GCP	10/26/2008
28. Methyl tert-butyl ether	SW8260B	< 4.0		4.0	µg/L	1	GCP	10/26/2008
29. Methylene chloride	SW8260B	< 5.0		5.0	µg/L	1	GCP	10/26/2008
30. o-Xylene	SW8260B	< 1.0		1.0	µg/L	1	GCP	10/26/2008
31. Tetrachloroethene	SW8260B	< 1.0		1.0	µg/L	1	GCP	10/26/2008
32. Toluene	SW8260B	< 1.0		1.0	µg/L	1	GCP	10/26/2008
33. trans-1,2-Dichloroethene	SW8260B	< 1.0		1.0	µg/L	1	GCP	10/26/2008
34. trans-1,3-Dichloropropene	SW8260B	< 1.0		1.0	µg/L	1	GCP	10/26/2008
35. Trichloroethene	SW8260B	< 1.0		1.0	µg/L	1	GCP	10/26/2008
36. Trichlorofluoromethane	SW8260B	< 1.0		1.0	µg/L	1	GCP	10/26/2008
37. Vinyl chloride	SW8260B	11		1.0	µg/L	1	GCP	10/26/2008

Definitions: PQL - Practical Quantitation Limit
DF - Dilution Factor

Qualifiers (Q): J - Detected below PQL but above MDL: Estimated
S - Spike Recovery Outside Acceptance Limits
B - Analyte detected in associated Method Blank
N - See case narrative for explanation

This report shall not be reproduced except in full, without the written approval of BIO-CHEM Laboratories, Inc.

Note: The sample results reported are based on the sample aliquot(s) tested.

BIO-CHEM Laboratories, Inc.

Date: *10/31/2008*

ANALYTICAL REPORT

CLIENT: DeLisle Associates Ltd.
Lab Order: 0810221
Project: Goodwill
Lab Sample ID: 0810221-02A

Project Number: EN08-044
Client Sample ID: EN08-044-02
Collection Date: 10/22/2008
Matrix: AQUEOUS

Analyses	Method Ref.	Result	Q	PQL	Units	DF	Analyst	Date
Volatiles by GC/MS								
1. 1,1,1-Trichloroethane	SW8260B	< 1.0		1.0	µg/L	1	GCP	10/26/2008
2. 1,1,2,2-Tetrachloroethane	SW8260B	< 1.0		1.0	µg/L	1	GCP	10/26/2008
3. 1,1,2-Trichloroethane	SW8260B	< 1.0		1.0	µg/L	1	GCP	10/26/2008
4. 1,1-Dichloroethane	SW8260B	< 1.0		1.0	µg/L	1	GCP	10/26/2008
5. 1,1-Dichloroethene	SW8260B	< 1.0		1.0	µg/L	1	GCP	10/26/2008
6. 1,2,4-Trimethylbenzene	SW8260B	< 1.0		1.0	µg/L	1	GCP	10/26/2008
7. 1,2-Dibromoethane	SW8260B	< 1.0		1.0	µg/L	1	GCP	10/26/2008
8. 1,2-Dichlorobenzene	SW8260B	< 1.0		1.0	µg/L	1	GCP	10/26/2008
9. 1,2-Dichloroethane	SW8260B	< 1.0		1.0	µg/L	1	GCP	10/26/2008
10. 1,2-Dichloropropane	SW8260B	< 1.0		1.0	µg/L	1	GCP	10/26/2008
11. 1,3,5-Trimethylbenzene	SW8260B	< 1.0		1.0	µg/L	1	GCP	10/26/2008
12. 1,3-Dichlorobenzene	SW8260B	< 1.0		1.0	µg/L	1	GCP	10/26/2008
13. 1,4-Dichlorobenzene	SW8260B	< 1.0		1.0	µg/L	1	GCP	10/26/2008
14. Benzene	SW8260B	< 1.0		1.0	µg/L	1	GCP	10/26/2008
15. Bromodichloromethane	SW8260B	< 1.0		1.0	µg/L	1	GCP	10/26/2008
16. Bromoform	SW8260B	< 1.0		1.0	µg/L	1	GCP	10/26/2008
17. Bromomethane	SW8260B	< 1.0		1.0	µg/L	1	GCP	10/26/2008
18. Carbon tetrachloride	SW8260B	< 1.0		1.0	µg/L	1	GCP	10/26/2008
19. Chlorobenzene	SW8260B	< 1.0		1.0	µg/L	1	GCP	10/26/2008
20. Chloroethane	SW8260B	< 1.0		1.0	µg/L	1	GCP	10/26/2008
21. Chloroform	SW8260B	< 1.0		1.0	µg/L	1	GCP	10/26/2008
22. Chloromethane	SW8260B	< 1.0		1.0	µg/L	1	GCP	10/26/2008
23. cis-1,2-Dichloroethene	SW8260B	< 1.0		1.0	µg/L	1	GCP	10/26/2008
24. cis-1,3-Dichloropropene	SW8260B	< 1.0		1.0	µg/L	1	GCP	10/26/2008
25. Dibromochloromethane	SW8260B	< 1.0		1.0	µg/L	1	GCP	10/26/2008
26. Ethylbenzene	SW8260B	< 1.0		1.0	µg/L	1	GCP	10/26/2008
27. m,p-Xylene	SW8260B	< 2.0		2.0	µg/L	1	GCP	10/26/2008
28. Methyl tert-butyl ether	SW8260B	< 4.0		4.0	µg/L	1	GCP	10/26/2008
29. Methylene chloride	SW8260B	< 5.0		5.0	µg/L	1	GCP	10/26/2008
30. o-Xylene	SW8260B	< 1.0		1.0	µg/L	1	GCP	10/26/2008
31. Tetrachloroethene	SW8260B	< 1.0		1.0	µg/L	1	GCP	10/26/2008
32. Toluene	SW8260B	< 1.0		1.0	µg/L	1	GCP	10/26/2008
33. trans-1,2-Dichloroethene	SW8260B	< 1.0		1.0	µg/L	1	GCP	10/26/2008
34. trans-1,3-Dichloropropene	SW8260B	< 1.0		1.0	µg/L	1	GCP	10/26/2008
35. Trichloroethene	SW8260B	< 1.0		1.0	µg/L	1	GCP	10/26/2008
36. Trichlorofluoromethane	SW8260B	< 1.0		1.0	µg/L	1	GCP	10/26/2008
37. Vinyl chloride	SW8260B	13		1.0	µg/L	1	GCP	10/26/2008

Definitions: PQL - Practical Quantitation Limit
DF - Dilution Factor

Qualifiers (Q): J - Detected below PQL but above MDL: Estimated
S - Spike Recovery Outside Acceptance Limits
B - Analyte detected in associated Method Blank
N - See case narrative for explanation

This report shall not be reproduced except in full, without the written approval of BIO-CHEM Laboratories, Inc.

Note: The sample results reported are based on the sample aliquot(s) tested.

BIO-CHEM Laboratories, Inc.

Date: *10/31/2008*

ANALYTICAL REPORT

CLIENT: DeLisle Associates Ltd.
Lab Order: 0810221
Project: Goodwill
Lab Sample ID: 0810221-03A

Project Number: EN08-044
Client Sample ID: EN08-044-03
Collection Date: 10/22/2008
Matrix: AQUEOUS

Analyses	Method Ref.	Result	Q	PQL	Units	DF	Analyst	Date
Volatiles by GC/MS								
1. 1,1,1-Trichloroethane	SW8260B	< 1.0		1.0	µg/L	1	GCP	10/26/2008
2. 1,1,2,2-Tetrachloroethane	SW8260B	< 1.0		1.0	µg/L	1	GCP	10/26/2008
3. 1,1,2-Trichloroethane	SW8260B	< 1.0		1.0	µg/L	1	GCP	10/26/2008
4. 1,1-Dichloroethane	SW8260B	< 1.0		1.0	µg/L	1	GCP	10/26/2008
5. 1,1-Dichloroethene	SW8260B	< 1.0		1.0	µg/L	1	GCP	10/26/2008
6. 1,2,4-Trimethylbenzene	SW8260B	< 1.0		1.0	µg/L	1	GCP	10/26/2008
7. 1,2-Dibromoethane	SW8260B	< 1.0		1.0	µg/L	1	GCP	10/26/2008
8. 1,2-Dichlorobenzene	SW8260B	< 1.0		1.0	µg/L	1	GCP	10/26/2008
9. 1,2-Dichloroethane	SW8260B	< 1.0		1.0	µg/L	1	GCP	10/26/2008
10. 1,2-Dichloropropane	SW8260B	< 1.0		1.0	µg/L	1	GCP	10/26/2008
11. 1,3,5-Trimethylbenzene	SW8260B	< 1.0		1.0	µg/L	1	GCP	10/26/2008
12. 1,3-Dichlorobenzene	SW8260B	< 1.0		1.0	µg/L	1	GCP	10/26/2008
13. 1,4-Dichlorobenzene	SW8260B	< 1.0		1.0	µg/L	1	GCP	10/26/2008
14. Benzene	SW8260B	< 1.0		1.0	µg/L	1	GCP	10/26/2008
15. Bromodichloromethane	SW8260B	< 1.0		1.0	µg/L	1	GCP	10/26/2008
16. Bromoform	SW8260B	< 1.0		1.0	µg/L	1	GCP	10/26/2008
17. Bromomethane	SW8260B	< 1.0		1.0	µg/L	1	GCP	10/26/2008
18. Carbon tetrachloride	SW8260B	< 1.0		1.0	µg/L	1	GCP	10/26/2008
19. Chlorobenzene	SW8260B	< 1.0		1.0	µg/L	1	GCP	10/26/2008
20. Chloroethane	SW8260B	< 1.0		1.0	µg/L	1	GCP	10/26/2008
21. Chloroform	SW8260B	< 1.0		1.0	µg/L	1	GCP	10/26/2008
22. Chloromethane	SW8260B	< 1.0		1.0	µg/L	1	GCP	10/26/2008
23. cis-1,2-Dichloroethene	SW8260B	< 1.0		1.0	µg/L	1	GCP	10/26/2008
24. cis-1,3-Dichloropropene	SW8260B	< 1.0		1.0	µg/L	1	GCP	10/26/2008
25. Dibromochloromethane	SW8260B	< 1.0		1.0	µg/L	1	GCP	10/26/2008
26. Ethylbenzene	SW8260B	< 1.0		1.0	µg/L	1	GCP	10/26/2008
27. m,p-Xylene	SW8260B	< 2.0		2.0	µg/L	1	GCP	10/26/2008
28. Methyl tert-butyl ether	SW8260B	< 4.0		4.0	µg/L	1	GCP	10/26/2008
29. Methylene chloride	SW8260B	< 5.0		5.0	µg/L	1	GCP	10/26/2008
30. o-Xylene	SW8260B	< 1.0		1.0	µg/L	1	GCP	10/26/2008
31. Tetrachloroethene	SW8260B	< 1.0		1.0	µg/L	1	GCP	10/26/2008
32. Toluene	SW8260B	< 1.0		1.0	µg/L	1	GCP	10/26/2008
33. trans-1,2-Dichloroethene	SW8260B	< 1.0		1.0	µg/L	1	GCP	10/26/2008
34. trans-1,3-Dichloropropene	SW8260B	< 1.0		1.0	µg/L	1	GCP	10/26/2008
35. Trichloroethene	SW8260B	< 1.0		1.0	µg/L	1	GCP	10/26/2008
36. Trichlorofluoromethane	SW8260B	< 1.0		1.0	µg/L	1	GCP	10/26/2008
37. Vinyl chloride	SW8260B	< 1.0		1.0	µg/L	1	GCP	10/26/2008

Definitions: PQL - Practical Quantitation Limit
DF - Dilution Factor

Qualifiers (Q): J - Detected below PQL but above MDL: Estimated
S - Spike Recovery Outside Acceptance Limits
B - Analyte detected in associated Method Blank
N - See case narrative for explanation

This report shall not be reproduced except in full, without the written approval of BIO-CHEM Laboratories, Inc.

Note: The sample results reported are based on the sample aliquot(s) tested.

BIO-CHEM Laboratories, Inc.

Date: *10/31/2008*

ANALYTICAL REPORT

CLIENT: DeLisle Associates Ltd.
Lab Order: 0810221
Project: Goodwill
Lab Sample ID: 0810221-04A

Project Number: EN08-044
Client Sample ID: EN08-044-04
Collection Date: 10/22/2008
Matrix: AQUEOUS

Analyses	Method Ref.	Result	Q	PQL	Units	DF	Analyst	Date
Volatiles by GC/MS								
1. 1,1,1-Trichloroethane	SW8260B	< 1.0		1.0	µg/L	1	GCP	10/26/2008
2. 1,1,2,2-Tetrachloroethane	SW8260B	< 1.0		1.0	µg/L	1	GCP	10/26/2008
3. 1,1,2-Trichloroethane	SW8260B	< 1.0		1.0	µg/L	1	GCP	10/26/2008
4. 1,1-Dichloroethane	SW8260B	< 1.0		1.0	µg/L	1	GCP	10/26/2008
5. 1,1-Dichloroethene	SW8260B	< 1.0		1.0	µg/L	1	GCP	10/26/2008
6. 1,2,4-Trimethylbenzene	SW8260B	< 1.0		1.0	µg/L	1	GCP	10/26/2008
7. 1,2-Dibromoethane	SW8260B	< 1.0		1.0	µg/L	1	GCP	10/26/2008
8. 1,2-Dichlorobenzene	SW8260B	< 1.0		1.0	µg/L	1	GCP	10/26/2008
9. 1,2-Dichloroethane	SW8260B	< 1.0		1.0	µg/L	1	GCP	10/26/2008
10. 1,2-Dichloropropane	SW8260B	< 1.0		1.0	µg/L	1	GCP	10/26/2008
11. 1,3,5-Trimethylbenzene	SW8260B	< 1.0		1.0	µg/L	1	GCP	10/26/2008
12. 1,3-Dichlorobenzene	SW8260B	< 1.0		1.0	µg/L	1	GCP	10/26/2008
13. 1,4-Dichlorobenzene	SW8260B	< 1.0		1.0	µg/L	1	GCP	10/26/2008
14. Benzene	SW8260B	< 1.0		1.0	µg/L	1	GCP	10/26/2008
15. Bromodichloromethane	SW8260B	< 1.0		1.0	µg/L	1	GCP	10/26/2008
16. Bromoform	SW8260B	< 1.0		1.0	µg/L	1	GCP	10/26/2008
17. Bromomethane	SW8260B	< 1.0		1.0	µg/L	1	GCP	10/26/2008
18. Carbon tetrachloride	SW8260B	< 1.0		1.0	µg/L	1	GCP	10/26/2008
19. Chlorobenzene	SW8260B	< 1.0		1.0	µg/L	1	GCP	10/26/2008
20. Chloroethane	SW8260B	< 1.0		1.0	µg/L	1	GCP	10/26/2008
21. Chloroform	SW8260B	< 1.0		1.0	µg/L	1	GCP	10/26/2008
22. Chloromethane	SW8260B	< 1.0		1.0	µg/L	1	GCP	10/26/2008
23. cis-1,2-Dichloroethene	SW8260B	< 1.0		1.0	µg/L	1	GCP	10/26/2008
24. cis-1,3-Dichloropropene	SW8260B	< 1.0		1.0	µg/L	1	GCP	10/26/2008
25. Dibromochloromethane	SW8260B	< 1.0		1.0	µg/L	1	GCP	10/26/2008
26. Ethylbenzene	SW8260B	< 1.0		1.0	µg/L	1	GCP	10/26/2008
27. m,p-Xylene	SW8260B	< 2.0		2.0	µg/L	1	GCP	10/26/2008
28. Methyl tert-butyl ether	SW8260B	< 4.0		4.0	µg/L	1	GCP	10/26/2008
29. Methylene chloride	SW8260B	< 5.0		5.0	µg/L	1	GCP	10/26/2008
30. o-Xylene	SW8260B	< 1.0		1.0	µg/L	1	GCP	10/26/2008
31. Tetrachloroethene	SW8260B	3.9		1.0	µg/L	1	GCP	10/26/2008
32. Toluene	SW8260B	< 1.0		1.0	µg/L	1	GCP	10/26/2008
33. trans-1,2-Dichloroethene	SW8260B	< 1.0		1.0	µg/L	1	GCP	10/26/2008
34. trans-1,3-Dichloropropene	SW8260B	< 1.0		1.0	µg/L	1	GCP	10/26/2008
35. Trichloroethene	SW8260B	< 1.0		1.0	µg/L	1	GCP	10/26/2008
36. Trichlorofluoromethane	SW8260B	< 1.0		1.0	µg/L	1	GCP	10/26/2008
37. Vinyl chloride	SW8260B	< 1.0		1.0	µg/L	1	GCP	10/26/2008

Definitions: PQL - Practical Quantitation Limit
DF - Dilution Factor

Qualifiers (Q): J - Detected below PQL but above MDL: Estimated
S - Spike Recovery Outside Acceptance Limits
B - Analyte detected in associated Method Blank
N - See case narrative for explanation

This report shall not be reproduced except in full, without the written approval of BIO-CHEM Laboratories, Inc.

Note: The sample results reported are based on the sample aliquot(s) tested.

BIO-CHEM Laboratories, Inc.

Date: *10/31/2008*

ANALYTICAL REPORT

CLIENT: DeLisle Associates Ltd.
Lab Order: 0810221
Project: Goodwill
Lab Sample ID: 0810221-05A

Project Number: EN08-044
Client Sample ID: EN08-044-05
Collection Date: 10/22/2008
Matrix: AQUEOUS

Analyses	Method Ref.	Result	Q	PQL	Units	DF	Analyst	Date
Volatiles by GC/MS								
1. 1,1,1-Trichloroethane	SW8260B	< 1.0		1.0	µg/L	1	GCP	10/30/2008
2. 1,1,2,2-Tetrachloroethane	SW8260B	< 1.0		1.0	µg/L	1	GCP	10/30/2008
3. 1,1,2-Trichloroethane	SW8260B	< 1.0		1.0	µg/L	1	GCP	10/30/2008
4. 1,1-Dichloroethane	SW8260B	< 1.0		1.0	µg/L	1	GCP	10/30/2008
5. 1,1-Dichloroethene	SW8260B	< 1.0		1.0	µg/L	1	GCP	10/30/2008
6. 1,2,4-Trimethylbenzene	SW8260B	< 1.0		1.0	µg/L	1	GCP	10/30/2008
7. 1,2-Dibromoethane	SW8260B	< 1.0		1.0	µg/L	1	GCP	10/30/2008
8. 1,2-Dichlorobenzene	SW8260B	< 1.0		1.0	µg/L	1	GCP	10/30/2008
9. 1,2-Dichloroethane	SW8260B	< 1.0		1.0	µg/L	1	GCP	10/30/2008
10. 1,2-Dichloropropane	SW8260B	< 1.0		1.0	µg/L	1	GCP	10/30/2008
11. 1,3,5-Trimethylbenzene	SW8260B	< 1.0		1.0	µg/L	1	GCP	10/30/2008
12. 1,3-Dichlorobenzene	SW8260B	< 1.0		1.0	µg/L	1	GCP	10/30/2008
13. 1,4-Dichlorobenzene	SW8260B	< 1.0		1.0	µg/L	1	GCP	10/30/2008
14. Benzene	SW8260B	< 1.0		1.0	µg/L	1	GCP	10/30/2008
15. Bromodichloromethane	SW8260B	< 1.0		1.0	µg/L	1	GCP	10/30/2008
16. Bromoform	SW8260B	< 1.0		1.0	µg/L	1	GCP	10/30/2008
17. Bromomethane	SW8260B	< 1.0		1.0	µg/L	1	GCP	10/30/2008
18. Carbon tetrachloride	SW8260B	< 1.0		1.0	µg/L	1	GCP	10/30/2008
19. Chlorobenzene	SW8260B	< 1.0		1.0	µg/L	1	GCP	10/30/2008
20. Chloroethane	SW8260B	< 1.0		1.0	µg/L	1	GCP	10/30/2008
21. Chloroform	SW8260B	< 1.0		1.0	µg/L	1	GCP	10/30/2008
22. Chloromethane	SW8260B	< 1.0		1.0	µg/L	1	GCP	10/30/2008
23. cis-1,2-Dichloroethene	SW8260B	< 1.0		1.0	µg/L	1	GCP	10/30/2008
24. cis-1,3-Dichloropropene	SW8260B	< 1.0		1.0	µg/L	1	GCP	10/30/2008
25. Dibromochloromethane	SW8260B	< 1.0		1.0	µg/L	1	GCP	10/30/2008
26. Ethylbenzene	SW8260B	< 1.0		1.0	µg/L	1	GCP	10/30/2008
27. m,p-Xylene	SW8260B	< 2.0		2.0	µg/L	1	GCP	10/30/2008
28. Methyl tert-butyl ether	SW8260B	< 4.0		4.0	µg/L	1	GCP	10/30/2008
29. Methylene chloride	SW8260B	< 5.0		5.0	µg/L	1	GCP	10/30/2008
30. o-Xylene	SW8260B	< 1.0		1.0	µg/L	1	GCP	10/30/2008
31. Tetrachloroethene	SW8260B	< 1.0		1.0	µg/L	1	GCP	10/30/2008
32. Toluene	SW8260B	< 1.0		1.0	µg/L	1	GCP	10/30/2008
33. trans-1,2-Dichloroethene	SW8260B	< 1.0		1.0	µg/L	1	GCP	10/30/2008
34. trans-1,3-Dichloropropene	SW8260B	< 1.0		1.0	µg/L	1	GCP	10/30/2008
35. Trichloroethene	SW8260B	< 1.0		1.0	µg/L	1	GCP	10/30/2008
36. Trichlorofluoromethane	SW8260B	< 1.0		1.0	µg/L	1	GCP	10/30/2008
37. Vinyl chloride	SW8260B	4.6		1.0	µg/L	1	GCP	10/30/2008

Definitions: PQL - Practical Quantitation Limit
DF - Dilution Factor

Qualifiers (Q): J - Detected below PQL but above MDL: Estimated
S - Spike Recovery Outside Acceptance Limits
B - Analyte detected in associated Method Blank
N - See case narrative for explanation

This report shall not be reproduced except in full, without the written approval of BIO-CHEM Laboratories, Inc.

Note: The sample results reported are based on the sample aliquot(s) tested.

BIO-CHEM Laboratories, Inc.

Date: *10/31/2008*

ANALYTICAL REPORT

CLIENT: DeLisle Associates Ltd.
Lab Order: 0810221
Project: Goodwill
Lab Sample ID: 0810221-06A

Project Number: EN08-044
Client Sample ID: EN08-044-06
Collection Date: 10/22/2008
Matrix: AQUEOUS

Analyses	Method Ref.	Result	Q	PQL	Units	DF	Analyst	Date
Volatiles by GC/MS								
1. 1,1,1-Trichloroethane	SW8260B	< 1.0		1.0	µg/L	1	GCP	10/30/2008
2. 1,1,2,2-Tetrachloroethane	SW8260B	< 1.0		1.0	µg/L	1	GCP	10/30/2008
3. 1,1,2-Trichloroethane	SW8260B	< 1.0		1.0	µg/L	1	GCP	10/30/2008
4. 1,1-Dichloroethane	SW8260B	< 1.0		1.0	µg/L	1	GCP	10/30/2008
5. 1,1-Dichloroethene	SW8260B	< 1.0		1.0	µg/L	1	GCP	10/30/2008
6. 1,2,4-Trimethylbenzene	SW8260B	< 1.0		1.0	µg/L	1	GCP	10/30/2008
7. 1,2-Dibromoethane	SW8260B	< 1.0		1.0	µg/L	1	GCP	10/30/2008
8. 1,2-Dichlorobenzene	SW8260B	< 1.0		1.0	µg/L	1	GCP	10/30/2008
9. 1,2-Dichloroethane	SW8260B	< 1.0		1.0	µg/L	1	GCP	10/30/2008
10. 1,2-Dichloropropane	SW8260B	< 1.0		1.0	µg/L	1	GCP	10/30/2008
11. 1,3,5-Trimethylbenzene	SW8260B	< 1.0		1.0	µg/L	1	GCP	10/30/2008
12. 1,3-Dichlorobenzene	SW8260B	< 1.0		1.0	µg/L	1	GCP	10/30/2008
13. 1,4-Dichlorobenzene	SW8260B	< 1.0		1.0	µg/L	1	GCP	10/30/2008
14. Benzene	SW8260B	< 1.0		1.0	µg/L	1	GCP	10/30/2008
15. Bromodichloromethane	SW8260B	< 1.0		1.0	µg/L	1	GCP	10/30/2008
16. Bromoform	SW8260B	< 1.0		1.0	µg/L	1	GCP	10/30/2008
17. Bromomethane	SW8260B	< 1.0		1.0	µg/L	1	GCP	10/30/2008
18. Carbon tetrachloride	SW8260B	< 1.0		1.0	µg/L	1	GCP	10/30/2008
19. Chlorobenzene	SW8260B	< 1.0		1.0	µg/L	1	GCP	10/30/2008
20. Chloroethane	SW8260B	< 1.0		1.0	µg/L	1	GCP	10/30/2008
21. Chloroform	SW8260B	< 1.0		1.0	µg/L	1	GCP	10/30/2008
22. Chloromethane	SW8260B	< 1.0		1.0	µg/L	1	GCP	10/30/2008
23. cis-1,2-Dichloroethene	SW8260B	< 1.0		1.0	µg/L	1	GCP	10/30/2008
24. cis-1,3-Dichloropropene	SW8260B	< 1.0		1.0	µg/L	1	GCP	10/30/2008
25. Dibromochloromethane	SW8260B	< 1.0		1.0	µg/L	1	GCP	10/30/2008
26. Ethylbenzene	SW8260B	< 1.0		1.0	µg/L	1	GCP	10/30/2008
27. m,p-Xylene	SW8260B	< 2.0		2.0	µg/L	1	GCP	10/30/2008
28. Methyl tert-butyl ether	SW8260B	< 4.0		4.0	µg/L	1	GCP	10/30/2008
29. Methylene chloride	SW8260B	< 5.0		5.0	µg/L	1	GCP	10/30/2008
30. o-Xylene	SW8260B	< 1.0		1.0	µg/L	1	GCP	10/30/2008
31. Tetrachloroethene	SW8260B	< 1.0		1.0	µg/L	1	GCP	10/30/2008
32. Toluene	SW8260B	< 1.0		1.0	µg/L	1	GCP	10/30/2008
33. trans-1,2-Dichloroethene	SW8260B	< 1.0		1.0	µg/L	1	GCP	10/30/2008
34. trans-1,3-Dichloropropene	SW8260B	< 1.0		1.0	µg/L	1	GCP	10/30/2008
35. Trichloroethene	SW8260B	< 1.0		1.0	µg/L	1	GCP	10/30/2008
36. Trichlorofluoromethane	SW8260B	< 1.0		1.0	µg/L	1	GCP	10/30/2008
37. Vinyl chloride	SW8260B	8.4		1.0	µg/L	1	GCP	10/30/2008

Definitions: PQL - Practical Quantitation Limit
DF - Dilution Factor

Qualifiers (Q): J - Detected below PQL but above MDL: Estimated
S - Spike Recovery Outside Acceptance Limits
B - Analyte detected in associated Method Blank
N - See case narrative for explanation

This report shall not be reproduced except in full, without the written approval of BIO-CHEM Laboratories, Inc.

Note: The sample results reported are based on the sample aliquot(s) tested.

BIO-CHEM Laboratories, Inc.

Date: *10/31/2008*

ANALYTICAL REPORT

CLIENT: DeLisle Associates Ltd.
Lab Order: 0810221
Project: Goodwill
Lab Sample ID: 0810221-07A

Project Number: EN08-044
Client Sample ID: EN08-044-07
Collection Date: 10/22/2008
Matrix: AQUEOUS

Analyses	Method Ref.	Result	Q	PQL	Units	DF	Analyst	Date
Volatiles by GC/MS								
1. 1,1,1-Trichloroethane	SW8260B	< 1.0		1.0	µg/L	1	GCP	10/30/2008
2. 1,1,2,2-Tetrachloroethane	SW8260B	< 1.0		1.0	µg/L	1	GCP	10/30/2008
3. 1,1,2-Trichloroethane	SW8260B	< 1.0		1.0	µg/L	1	GCP	10/30/2008
4. 1,1-Dichloroethane	SW8260B	< 1.0		1.0	µg/L	1	GCP	10/30/2008
5. 1,1-Dichloroethene	SW8260B	< 1.0		1.0	µg/L	1	GCP	10/30/2008
6. 1,2,4-Trimethylbenzene	SW8260B	< 1.0		1.0	µg/L	1	GCP	10/30/2008
7. 1,2-Dibromoethane	SW8260B	< 1.0		1.0	µg/L	1	GCP	10/30/2008
8. 1,2-Dichlorobenzene	SW8260B	< 1.0		1.0	µg/L	1	GCP	10/30/2008
9. 1,2-Dichloroethane	SW8260B	< 1.0		1.0	µg/L	1	GCP	10/30/2008
10. 1,2-Dichloropropane	SW8260B	< 1.0		1.0	µg/L	1	GCP	10/30/2008
11. 1,3,5-Trimethylbenzene	SW8260B	< 1.0		1.0	µg/L	1	GCP	10/30/2008
12. 1,3-Dichlorobenzene	SW8260B	< 1.0		1.0	µg/L	1	GCP	10/30/2008
13. 1,4-Dichlorobenzene	SW8260B	< 1.0		1.0	µg/L	1	GCP	10/30/2008
14. Benzene	SW8260B	< 1.0		1.0	µg/L	1	GCP	10/30/2008
15. Bromodichloromethane	SW8260B	< 1.0		1.0	µg/L	1	GCP	10/30/2008
16. Bromoform	SW8260B	< 1.0		1.0	µg/L	1	GCP	10/30/2008
17. Bromomethane	SW8260B	< 1.0		1.0	µg/L	1	GCP	10/30/2008
18. Carbon tetrachloride	SW8260B	< 1.0		1.0	µg/L	1	GCP	10/30/2008
19. Chlorobenzene	SW8260B	< 1.0		1.0	µg/L	1	GCP	10/30/2008
20. Chloroethane	SW8260B	< 1.0		1.0	µg/L	1	GCP	10/30/2008
21. Chloroform	SW8260B	< 1.0		1.0	µg/L	1	GCP	10/30/2008
22. Chloromethane	SW8260B	< 1.0		1.0	µg/L	1	GCP	10/30/2008
23. cis-1,2-Dichloroethene	SW8260B	< 1.0		1.0	µg/L	1	GCP	10/30/2008
24. cis-1,3-Dichloropropene	SW8260B	< 1.0		1.0	µg/L	1	GCP	10/30/2008
25. Dibromochloromethane	SW8260B	< 1.0		1.0	µg/L	1	GCP	10/30/2008
26. Ethylbenzene	SW8260B	< 1.0		1.0	µg/L	1	GCP	10/30/2008
27. m,p-Xylene	SW8260B	< 2.0		2.0	µg/L	1	GCP	10/30/2008
28. Methyl tert-butyl ether	SW8260B	< 4.0		4.0	µg/L	1	GCP	10/30/2008
29. Methylene chloride	SW8260B	< 5.0		5.0	µg/L	1	GCP	10/30/2008
30. o-Xylene	SW8260B	< 1.0		1.0	µg/L	1	GCP	10/30/2008
31. Tetrachloroethene	SW8260B	< 1.0		1.0	µg/L	1	GCP	10/30/2008
32. Toluene	SW8260B	< 1.0		1.0	µg/L	1	GCP	10/30/2008
33. trans-1,2-Dichloroethene	SW8260B	< 1.0		1.0	µg/L	1	GCP	10/30/2008
34. trans-1,3-Dichloropropene	SW8260B	< 1.0		1.0	µg/L	1	GCP	10/30/2008
35. Trichloroethene	SW8260B	< 1.0		1.0	µg/L	1	GCP	10/30/2008
36. Trichlorofluoromethane	SW8260B	< 1.0		1.0	µg/L	1	GCP	10/30/2008
37. Vinyl chloride	SW8260B	1.3		1.0	µg/L	1	GCP	10/30/2008

Definitions: PQL - Practical Quantitation Limit
DF - Dilution Factor

Qualifiers (Q): J - Detected below PQL but above MDL: Estimated
S - Spike Recovery Outside Acceptance Limits
B - Analyte detected in associated Method Blank
N - See case narrative for explanation

This report shall not be reproduced except in full, without the written approval of BIO-CHEM Laboratories, Inc.

Note: The sample results reported are based on the sample aliquot(s) tested.

BIO-CHEM Laboratories, Inc.

Date: *10/31/2008*

ANALYTICAL REPORT

CLIENT: DeLisle Associates Ltd.
Lab Order: 0810221
Project: Goodwill
Lab Sample ID: 0810221-08A

Project Number: EN08-044
Client Sample ID: EN08-044-15
Collection Date: 10/23/2008
Matrix: AQUEOUS

Analyses	Method Ref.	Result	Q	PQL	Units	DF	Analyst	Date
Volatiles by GC/MS								
1. 1,1,1-Trichloroethane	SW8260B	< 1.0		1.0	µg/L	1	GCP	10/26/2008
2. 1,1,2,2-Tetrachloroethane	SW8260B	< 1.0		1.0	µg/L	1	GCP	10/26/2008
3. 1,1,2-Trichloroethane	SW8260B	< 1.0		1.0	µg/L	1	GCP	10/26/2008
4. 1,1-Dichloroethane	SW8260B	< 1.0		1.0	µg/L	1	GCP	10/26/2008
5. 1,1-Dichloroethene	SW8260B	< 1.0		1.0	µg/L	1	GCP	10/26/2008
6. 1,2,4-Trimethylbenzene	SW8260B	< 1.0		1.0	µg/L	1	GCP	10/26/2008
7. 1,2-Dibromoethane	SW8260B	< 1.0		1.0	µg/L	1	GCP	10/26/2008
8. 1,2-Dichlorobenzene	SW8260B	< 1.0		1.0	µg/L	1	GCP	10/26/2008
9. 1,2-Dichloroethane	SW8260B	< 1.0		1.0	µg/L	1	GCP	10/26/2008
10. 1,2-Dichloropropane	SW8260B	< 1.0		1.0	µg/L	1	GCP	10/26/2008
11. 1,3,5-Trimethylbenzene	SW8260B	< 1.0		1.0	µg/L	1	GCP	10/26/2008
12. 1,3-Dichlorobenzene	SW8260B	< 1.0		1.0	µg/L	1	GCP	10/26/2008
13. 1,4-Dichlorobenzene	SW8260B	< 1.0		1.0	µg/L	1	GCP	10/26/2008
14. Benzene	SW8260B	< 1.0		1.0	µg/L	1	GCP	10/26/2008
15. Bromodichloromethane	SW8260B	< 1.0		1.0	µg/L	1	GCP	10/26/2008
16. Bromoform	SW8260B	< 1.0		1.0	µg/L	1	GCP	10/26/2008
17. Bromomethane	SW8260B	< 1.0		1.0	µg/L	1	GCP	10/26/2008
18. Carbon tetrachloride	SW8260B	< 1.0		1.0	µg/L	1	GCP	10/26/2008
19. Chlorobenzene	SW8260B	< 1.0		1.0	µg/L	1	GCP	10/26/2008
20. Chloroethane	SW8260B	< 1.0		1.0	µg/L	1	GCP	10/26/2008
21. Chloroform	SW8260B	< 1.0		1.0	µg/L	1	GCP	10/26/2008
22. Chloromethane	SW8260B	< 1.0		1.0	µg/L	1	GCP	10/26/2008
23. cis-1,2-Dichloroethene	SW8260B	< 1.0		1.0	µg/L	1	GCP	10/26/2008
24. cis-1,3-Dichloropropene	SW8260B	< 1.0		1.0	µg/L	1	GCP	10/26/2008
25. Dibromochloromethane	SW8260B	< 1.0		1.0	µg/L	1	GCP	10/26/2008
26. Ethylbenzene	SW8260B	< 1.0		1.0	µg/L	1	GCP	10/26/2008
27. m,p-Xylene	SW8260B	< 2.0		2.0	µg/L	1	GCP	10/26/2008
28. Methyl tert-butyl ether	SW8260B	< 4.0		4.0	µg/L	1	GCP	10/26/2008
29. Methylene chloride	SW8260B	< 5.0		5.0	µg/L	1	GCP	10/26/2008
30. o-Xylene	SW8260B	< 1.0		1.0	µg/L	1	GCP	10/26/2008
31. Tetrachloroethene	SW8260B	< 1.0		1.0	µg/L	1	GCP	10/26/2008
32. Toluene	SW8260B	< 1.0		1.0	µg/L	1	GCP	10/26/2008
33. trans-1,2-Dichloroethene	SW8260B	< 1.0		1.0	µg/L	1	GCP	10/26/2008
34. trans-1,3-Dichloropropene	SW8260B	< 1.0		1.0	µg/L	1	GCP	10/26/2008
35. Trichloroethene	SW8260B	< 1.0		1.0	µg/L	1	GCP	10/26/2008
36. Trichlorofluoromethane	SW8260B	< 1.0		1.0	µg/L	1	GCP	10/26/2008
37. Vinyl chloride	SW8260B	< 1.0		1.0	µg/L	1	GCP	10/26/2008

Definitions: PQL - Practical Quantitation Limit
DF - Dilution Factor

Qualifiers (Q): J - Detected below PQL but above MDL: Estimated
S - Spike Recovery Outside Acceptance Limits
B - Analyte detected in associated Method Blank
N - See case narrative for explanation

This report shall not be reproduced except in full, without the written approval of BIO-CHEM Laboratories, Inc.

Note: The sample results reported are based on the sample aliquot(s) tested.

BIO-CHEM Laboratories, Inc.

Date: *10/31/2008*

ANALYTICAL REPORT

CLIENT: DeLisle Associates Ltd.
Lab Order: 0810221
Project: Goodwill
Lab Sample ID: 0810221-09A

Project Number: EN08-044
Client Sample ID: EN08-044-16
Collection Date: 10/23/2008
Matrix: AQUEOUS

Analyses	Method Ref.	Result	Q	PQL	Units	DF	Analyst	Date
Volatiles by GC/MS								
1. 1,1,1-Trichloroethane	SW8260B	< 1.0		1.0	µg/L	1	GCP	10/26/2008
2. 1,1,2,2-Tetrachloroethane	SW8260B	< 1.0		1.0	µg/L	1	GCP	10/26/2008
3. 1,1,2-Trichloroethane	SW8260B	< 1.0		1.0	µg/L	1	GCP	10/26/2008
4. 1,1-Dichloroethane	SW8260B	< 1.0		1.0	µg/L	1	GCP	10/26/2008
5. 1,1-Dichloroethene	SW8260B	< 1.0		1.0	µg/L	1	GCP	10/26/2008
6. 1,2,4-Trimethylbenzene	SW8260B	< 1.0		1.0	µg/L	1	GCP	10/26/2008
7. 1,2-Dibromoethane	SW8260B	< 1.0		1.0	µg/L	1	GCP	10/26/2008
8. 1,2-Dichlorobenzene	SW8260B	< 1.0		1.0	µg/L	1	GCP	10/26/2008
9. 1,2-Dichloroethane	SW8260B	< 1.0		1.0	µg/L	1	GCP	10/26/2008
10. 1,2-Dichloropropane	SW8260B	< 1.0		1.0	µg/L	1	GCP	10/26/2008
11. 1,3,5-Trimethylbenzene	SW8260B	< 1.0		1.0	µg/L	1	GCP	10/26/2008
12. 1,3-Dichlorobenzene	SW8260B	< 1.0		1.0	µg/L	1	GCP	10/26/2008
13. 1,4-Dichlorobenzene	SW8260B	< 1.0		1.0	µg/L	1	GCP	10/26/2008
14. Benzene	SW8260B	< 1.0		1.0	µg/L	1	GCP	10/26/2008
15. Bromodichloromethane	SW8260B	< 1.0		1.0	µg/L	1	GCP	10/26/2008
16. Bromoform	SW8260B	< 1.0		1.0	µg/L	1	GCP	10/26/2008
17. Bromomethane	SW8260B	< 1.0		1.0	µg/L	1	GCP	10/26/2008
18. Carbon tetrachloride	SW8260B	< 1.0		1.0	µg/L	1	GCP	10/26/2008
19. Chlorobenzene	SW8260B	< 1.0		1.0	µg/L	1	GCP	10/26/2008
20. Chloroethane	SW8260B	< 1.0		1.0	µg/L	1	GCP	10/26/2008
21. Chloroform	SW8260B	< 1.0		1.0	µg/L	1	GCP	10/26/2008
22. Chloromethane	SW8260B	< 1.0		1.0	µg/L	1	GCP	10/26/2008
23. cis-1,2-Dichloroethene	SW8260B	1.8		1.0	µg/L	1	GCP	10/26/2008
24. cis-1,3-Dichloropropene	SW8260B	< 1.0		1.0	µg/L	1	GCP	10/26/2008
25. Dibromochloromethane	SW8260B	< 1.0		1.0	µg/L	1	GCP	10/26/2008
26. Ethylbenzene	SW8260B	< 1.0		1.0	µg/L	1	GCP	10/26/2008
27. m,p-Xylene	SW8260B	< 2.0		2.0	µg/L	1	GCP	10/26/2008
28. Methyl tert-butyl ether	SW8260B	< 4.0		4.0	µg/L	1	GCP	10/26/2008
29. Methylene chloride	SW8260B	< 5.0		5.0	µg/L	1	GCP	10/26/2008
30. o-Xylene	SW8260B	< 1.0		1.0	µg/L	1	GCP	10/26/2008
31. Tetrachloroethene	SW8260B	< 1.0		1.0	µg/L	1	GCP	10/26/2008
32. Toluene	SW8260B	< 1.0		1.0	µg/L	1	GCP	10/26/2008
33. trans-1,2-Dichloroethene	SW8260B	< 1.0		1.0	µg/L	1	GCP	10/26/2008
34. trans-1,3-Dichloropropene	SW8260B	< 1.0		1.0	µg/L	1	GCP	10/26/2008
35. Trichloroethene	SW8260B	< 1.0		1.0	µg/L	1	GCP	10/26/2008
36. Trichlorofluoromethane	SW8260B	< 1.0		1.0	µg/L	1	GCP	10/26/2008
37. Vinyl chloride	SW8260B	1.1		1.0	µg/L	1	GCP	10/26/2008

Definitions: PQL - Practical Quantitation Limit
DF - Dilution Factor

Qualifiers (Q): J - Detected below PQL but above MDL: Estimated
S - Spike Recovery Outside Acceptance Limits
B - Analyte detected in associated Method Blank
N - See case narrative for explanation

This report shall not be reproduced except in full, without the written approval of BIO-CHEM Laboratories, Inc.

Note: The sample results reported are based on the sample aliquot(s) tested.

BIO-CHEM Laboratories, Inc.

Date: *10/31/2008*

ANALYTICAL REPORT

CLIENT: DeLisle Associates Ltd.
Lab Order: 0810221
Project: Goodwill
Lab Sample ID: 0810221-10A

Project Number: EN08-044
Client Sample ID: EN08-044-08
Collection Date: 10/22/2008
Matrix: SOIL

Analyses	Method Ref.	Result	Q	PQL	Units	DF	Analyst	Date
Volatiles by GC/MS (5035)								
1. 1,1,1-Trichloroethane	SW8260B	< 50		50	µg/Kg-dry	1	GCP	10/30/2008
2. 1,1,2,2-Tetrachloroethane	SW8260B	< 50		50	µg/Kg-dry	1	GCP	10/30/2008
3. 1,1,2-Trichloroethane	SW8260B	< 50		50	µg/Kg-dry	1	GCP	10/30/2008
4. 1,1-Dichloroethane	SW8260B	< 50		50	µg/Kg-dry	1	GCP	10/30/2008
5. 1,1-Dichloroethene	SW8260B	< 50		50	µg/Kg-dry	1	GCP	10/30/2008
6. 1,2,4-Trimethylbenzene	SW8260B	< 50		50	µg/Kg-dry	1	GCP	10/30/2008
7. 1,2-Dibromoethane	SW8260B	< 50		50	µg/Kg-dry	1	GCP	10/30/2008
8. 1,2-Dichlorobenzene	SW8260B	< 50		50	µg/Kg-dry	1	GCP	10/30/2008
9. 1,2-Dichloroethane	SW8260B	< 50		50	µg/Kg-dry	1	GCP	10/30/2008
10. 1,2-Dichloropropane	SW8260B	< 50		50	µg/Kg-dry	1	GCP	10/30/2008
11. 1,3,5-Trimethylbenzene	SW8260B	< 50		50	µg/Kg-dry	1	GCP	10/30/2008
12. 1,3-Dichlorobenzene	SW8260B	< 50		50	µg/Kg-dry	1	GCP	10/30/2008
13. 1,4-Dichlorobenzene	SW8260B	< 50		50	µg/Kg-dry	1	GCP	10/30/2008
14. Benzene	SW8260B	< 50		50	µg/Kg-dry	1	GCP	10/30/2008
15. Bromodichloromethane	SW8260B	< 50		50	µg/Kg-dry	1	GCP	10/30/2008
16. Bromoform	SW8260B	< 50		50	µg/Kg-dry	1	GCP	10/30/2008
17. Bromomethane	SW8260B	< 50		50	µg/Kg-dry	1	GCP	10/30/2008
18. Carbon tetrachloride	SW8260B	< 50		50	µg/Kg-dry	1	GCP	10/30/2008
19. Chlorobenzene	SW8260B	< 50		50	µg/Kg-dry	1	GCP	10/30/2008
20. Chloroethane	SW8260B	< 50		50	µg/Kg-dry	1	GCP	10/30/2008
21. Chloroform	SW8260B	< 50		50	µg/Kg-dry	1	GCP	10/30/2008
22. Chloromethane	SW8260B	< 50		50	µg/Kg-dry	1	GCP	10/30/2008
23. cis-1,2-Dichloroethene	SW8260B	< 50		50	µg/Kg-dry	1	GCP	10/30/2008
24. cis-1,3-Dichloropropene	SW8260B	< 50		50	µg/Kg-dry	1	GCP	10/30/2008
25. Dibromochloromethane	SW8260B	< 50		50	µg/Kg-dry	1	GCP	10/30/2008
26. Ethylbenzene	SW8260B	< 50		50	µg/Kg-dry	1	GCP	10/30/2008
27. m,p-Xylene	SW8260B	< 100		100	µg/Kg-dry	1	GCP	10/30/2008
28. Methyl tert-butyl ether	SW8260B	< 250		250	µg/Kg-dry	1	GCP	10/30/2008
29. Methylene chloride	SW8260B	< 100		100	µg/Kg-dry	1	GCP	10/30/2008
30. o-Xylene	SW8260B	< 50		50	µg/Kg-dry	1	GCP	10/30/2008
31. Tetrachloroethene	SW8260B	310		50	µg/Kg-dry	1	GCP	10/30/2008
32. Toluene	SW8260B	< 50		50	µg/Kg-dry	1	GCP	10/30/2008
33. trans-1,2-Dichloroethene	SW8260B	< 50		50	µg/Kg-dry	1	GCP	10/30/2008
34. trans-1,3-Dichloropropene	SW8260B	< 50		50	µg/Kg-dry	1	GCP	10/30/2008
35. Trichloroethene	SW8260B	< 50		50	µg/Kg-dry	1	GCP	10/30/2008
36. Trichlorofluoromethane	SW8260B	< 50		50	µg/Kg-dry	1	GCP	10/30/2008
37. Vinyl chloride	SW8260B	< 40		40	µg/Kg-dry	1	GCP	10/30/2008

Definitions: PQL - Practical Quantitation Limit
DF - Dilution Factor

Qualifiers (Q): J - Detected below PQL but above MDL: Estimated
S - Spike Recovery Outside Acceptance Limits
B - Analyte detected in associated Method Blank
N - See case narrative for explanation

This report shall not be reproduced except in full, without the written approval of BIO-CHEM Laboratories, Inc.

Note: The sample results reported are based on the sample aliquot(s) tested.

BIO-CHEM Laboratories, Inc.

Date: *10/31/2008*

ANALYTICAL REPORT

CLIENT: DeLisle Associates Ltd.
Lab Order: 0810221
Project: Goodwill
Lab Sample ID: 0810221-11A

Project Number: EN08-044
Client Sample ID: EN08-044-09
Collection Date: 10/22/2008
Matrix: SOIL

Analyses	Method Ref.	Result	Q	PQL	Units	DF	Analyst	Date
Volatiles by GC/MS (5035)								
1. 1,1,1-Trichloroethane	SW8260B	< 50		50	µg/Kg-dry	1	GCP	10/30/2008
2. 1,1,2,2-Tetrachloroethane	SW8260B	< 50		50	µg/Kg-dry	1	GCP	10/30/2008
3. 1,1,2-Trichloroethane	SW8260B	< 50		50	µg/Kg-dry	1	GCP	10/30/2008
4. 1,1-Dichloroethane	SW8260B	< 50		50	µg/Kg-dry	1	GCP	10/30/2008
5. 1,1-Dichloroethene	SW8260B	< 50		50	µg/Kg-dry	1	GCP	10/30/2008
6. 1,2,4-Trimethylbenzene	SW8260B	250		50	µg/Kg-dry	1	GCP	10/30/2008
7. 1,2-Dibromoethane	SW8260B	< 50		50	µg/Kg-dry	1	GCP	10/30/2008
8. 1,2-Dichlorobenzene	SW8260B	< 50		50	µg/Kg-dry	1	GCP	10/30/2008
9. 1,2-Dichloroethane	SW8260B	< 50		50	µg/Kg-dry	1	GCP	10/30/2008
10. 1,2-Dichloropropane	SW8260B	< 50		50	µg/Kg-dry	1	GCP	10/30/2008
11. 1,3,5-Trimethylbenzene	SW8260B	120		50	µg/Kg-dry	1	GCP	10/30/2008
12. 1,3-Dichlorobenzene	SW8260B	< 50		50	µg/Kg-dry	1	GCP	10/30/2008
13. 1,4-Dichlorobenzene	SW8260B	< 50		50	µg/Kg-dry	1	GCP	10/30/2008
14. Benzene	SW8260B	< 50		50	µg/Kg-dry	1	GCP	10/30/2008
15. Bromodichloromethane	SW8260B	< 50		50	µg/Kg-dry	1	GCP	10/30/2008
16. Bromoform	SW8260B	< 50		50	µg/Kg-dry	1	GCP	10/30/2008
17. Bromomethane	SW8260B	< 50		50	µg/Kg-dry	1	GCP	10/30/2008
18. Carbon tetrachloride	SW8260B	< 50		50	µg/Kg-dry	1	GCP	10/30/2008
19. Chlorobenzene	SW8260B	< 50		50	µg/Kg-dry	1	GCP	10/30/2008
20. Chloroethane	SW8260B	< 50		50	µg/Kg-dry	1	GCP	10/30/2008
21. Chloroform	SW8260B	< 50		50	µg/Kg-dry	1	GCP	10/30/2008
22. Chloromethane	SW8260B	< 50		50	µg/Kg-dry	1	GCP	10/30/2008
23. cis-1,2-Dichloroethene	SW8260B	< 50		50	µg/Kg-dry	1	GCP	10/30/2008
24. cis-1,3-Dichloropropene	SW8260B	< 50		50	µg/Kg-dry	1	GCP	10/30/2008
25. Dibromochloromethane	SW8260B	< 50		50	µg/Kg-dry	1	GCP	10/30/2008
26. Ethylbenzene	SW8260B	< 50		50	µg/Kg-dry	1	GCP	10/30/2008
27. m,p-Xylene	SW8260B	130		100	µg/Kg-dry	1	GCP	10/30/2008
28. Methyl tert-butyl ether	SW8260B	< 250		250	µg/Kg-dry	1	GCP	10/30/2008
29. Methylene chloride	SW8260B	< 100		100	µg/Kg-dry	1	GCP	10/30/2008
30. o-Xylene	SW8260B	100		50	µg/Kg-dry	1	GCP	10/30/2008
31. Tetrachloroethene	SW8260B	280,000		2,500	µg/Kg-dry	50	GCP	10/31/2008
32. Toluene	SW8260B	< 50		50	µg/Kg-dry	1	GCP	10/30/2008
33. trans-1,2-Dichloroethene	SW8260B	< 50		50	µg/Kg-dry	1	GCP	10/30/2008
34. trans-1,3-Dichloropropene	SW8260B	< 50		50	µg/Kg-dry	1	GCP	10/30/2008
35. Trichloroethene	SW8260B	< 50		50	µg/Kg-dry	1	GCP	10/30/2008
36. Trichlorofluoromethane	SW8260B	< 50		50	µg/Kg-dry	1	GCP	10/30/2008
37. Vinyl chloride	SW8260B	< 40		40	µg/Kg-dry	1	GCP	10/30/2008

Definitions: PQL - Practical Quantitation Limit
DF - Dilution Factor

Qualifiers (Q): J - Detected below PQL but above MDL: Estimated
S - Spike Recovery Outside Acceptance Limits
B - Analyte detected in associated Method Blank
N - See case narrative for explanation

This report shall not be reproduced except in full, without the written approval of BIO-CHEM Laboratories, Inc.

Note: The sample results reported are based on the sample aliquot(s) tested.

BIO-CHEM Laboratories, Inc.

Date: *10/31/2008*

ANALYTICAL REPORT

CLIENT: DeLisle Associates Ltd.
Lab Order: 0810221
Project: Goodwill
Lab Sample ID: 0810221-12A

Project Number: EN08-044
Client Sample ID: EN08-044-10
Collection Date: 10/23/2008
Matrix: SOIL

Analyses	Method Ref.	Result	Q	PQL	Units	DF	Analyst	Date
Volatiles by GC/MS (5035)								
1. 1,1,1-Trichloroethane	SW8260B	< 50		50	µg/Kg-dry	1	GCP	10/30/2008
2. 1,1,2,2-Tetrachloroethane	SW8260B	< 50		50	µg/Kg-dry	1	GCP	10/30/2008
3. 1,1,2-Trichloroethane	SW8260B	< 50		50	µg/Kg-dry	1	GCP	10/30/2008
4. 1,1-Dichloroethane	SW8260B	< 50		50	µg/Kg-dry	1	GCP	10/30/2008
5. 1,1-Dichloroethene	SW8260B	< 50		50	µg/Kg-dry	1	GCP	10/30/2008
6. 1,2,4-Trimethylbenzene	SW8260B	< 50		50	µg/Kg-dry	1	GCP	10/30/2008
7. 1,2-Dibromoethane	SW8260B	< 50		50	µg/Kg-dry	1	GCP	10/30/2008
8. 1,2-Dichlorobenzene	SW8260B	< 50		50	µg/Kg-dry	1	GCP	10/30/2008
9. 1,2-Dichloroethane	SW8260B	< 50		50	µg/Kg-dry	1	GCP	10/30/2008
10. 1,2-Dichloropropane	SW8260B	< 50		50	µg/Kg-dry	1	GCP	10/30/2008
11. 1,3,5-Trimethylbenzene	SW8260B	< 50		50	µg/Kg-dry	1	GCP	10/30/2008
12. 1,3-Dichlorobenzene	SW8260B	< 50		50	µg/Kg-dry	1	GCP	10/30/2008
13. 1,4-Dichlorobenzene	SW8260B	< 50		50	µg/Kg-dry	1	GCP	10/30/2008
14. Benzene	SW8260B	< 50		50	µg/Kg-dry	1	GCP	10/30/2008
15. Bromodichloromethane	SW8260B	< 50		50	µg/Kg-dry	1	GCP	10/30/2008
16. Bromoform	SW8260B	< 50		50	µg/Kg-dry	1	GCP	10/30/2008
17. Bromomethane	SW8260B	< 50		50	µg/Kg-dry	1	GCP	10/30/2008
18. Carbon tetrachloride	SW8260B	< 50		50	µg/Kg-dry	1	GCP	10/30/2008
19. Chlorobenzene	SW8260B	< 50		50	µg/Kg-dry	1	GCP	10/30/2008
20. Chloroethane	SW8260B	< 50		50	µg/Kg-dry	1	GCP	10/30/2008
21. Chloroform	SW8260B	< 50		50	µg/Kg-dry	1	GCP	10/30/2008
22. Chloromethane	SW8260B	< 50		50	µg/Kg-dry	1	GCP	10/30/2008
23. cis-1,2-Dichloroethene	SW8260B	< 50		50	µg/Kg-dry	1	GCP	10/30/2008
24. cis-1,3-Dichloropropene	SW8260B	< 50		50	µg/Kg-dry	1	GCP	10/30/2008
25. Dibromochloromethane	SW8260B	< 50		50	µg/Kg-dry	1	GCP	10/30/2008
26. Ethylbenzene	SW8260B	< 50		50	µg/Kg-dry	1	GCP	10/30/2008
27. m,p-Xylene	SW8260B	< 100		100	µg/Kg-dry	1	GCP	10/30/2008
28. Methyl tert-butyl ether	SW8260B	< 250		250	µg/Kg-dry	1	GCP	10/30/2008
29. Methylene chloride	SW8260B	< 100		100	µg/Kg-dry	1	GCP	10/30/2008
30. o-Xylene	SW8260B	< 50		50	µg/Kg-dry	1	GCP	10/30/2008
31. Tetrachloroethene	SW8260B	< 50		50	µg/Kg-dry	1	GCP	10/30/2008
32. Toluene	SW8260B	< 50		50	µg/Kg-dry	1	GCP	10/30/2008
33. trans-1,2-Dichloroethene	SW8260B	< 50		50	µg/Kg-dry	1	GCP	10/30/2008
34. trans-1,3-Dichloropropene	SW8260B	< 50		50	µg/Kg-dry	1	GCP	10/30/2008
35. Trichloroethene	SW8260B	< 50		50	µg/Kg-dry	1	GCP	10/30/2008
36. Trichlorofluoromethane	SW8260B	< 50		50	µg/Kg-dry	1	GCP	10/30/2008
37. Vinyl chloride	SW8260B	< 40		40	µg/Kg-dry	1	GCP	10/30/2008

Definitions: PQL - Practical Quantitation Limit
DF - Dilution Factor

Qualifiers (Q): J - Detected below PQL but above MDL: Estimated
S - Spike Recovery Outside Acceptance Limits
B - Analyte detected in associated Method Blank
N - See case narrative for explanation

This report shall not be reproduced except in full, without the written approval of BIO-CHEM Laboratories, Inc.

Note: The sample results reported are based on the sample aliquot(s) tested.

BIO-CHEM Laboratories, Inc.

Date: *10/31/2008*

ANALYTICAL REPORT

CLIENT: DeLisle Associates Ltd.
Lab Order: 0810221
Project: Goodwill
Lab Sample ID: 0810221-13A

Project Number: EN08-044
Client Sample ID: EN08-044-11
Collection Date: 10/23/2008
Matrix: SOIL

Analyses	Method Ref.	Result	Q	PQL	Units	DF	Analyst	Date
Volatiles by GC/MS (5035)								
1. 1,1,1-Trichloroethane	SW8260B	< 50		50	µg/Kg-dry	1	GCP	10/30/2008
2. 1,1,2,2-Tetrachloroethane	SW8260B	< 50		50	µg/Kg-dry	1	GCP	10/30/2008
3. 1,1,2-Trichloroethane	SW8260B	< 50		50	µg/Kg-dry	1	GCP	10/30/2008
4. 1,1-Dichloroethane	SW8260B	< 50		50	µg/Kg-dry	1	GCP	10/30/2008
5. 1,1-Dichloroethene	SW8260B	< 50		50	µg/Kg-dry	1	GCP	10/30/2008
6. 1,2,4-Trimethylbenzene	SW8260B	< 50		50	µg/Kg-dry	1	GCP	10/30/2008
7. 1,2-Dibromoethane	SW8260B	< 50		50	µg/Kg-dry	1	GCP	10/30/2008
8. 1,2-Dichlorobenzene	SW8260B	< 50		50	µg/Kg-dry	1	GCP	10/30/2008
9. 1,2-Dichloroethane	SW8260B	< 50		50	µg/Kg-dry	1	GCP	10/30/2008
10. 1,2-Dichloropropane	SW8260B	< 50		50	µg/Kg-dry	1	GCP	10/30/2008
11. 1,3,5-Trimethylbenzene	SW8260B	< 50		50	µg/Kg-dry	1	GCP	10/30/2008
12. 1,3-Dichlorobenzene	SW8260B	< 50		50	µg/Kg-dry	1	GCP	10/30/2008
13. 1,4-Dichlorobenzene	SW8260B	< 50		50	µg/Kg-dry	1	GCP	10/30/2008
14. Benzene	SW8260B	< 50		50	µg/Kg-dry	1	GCP	10/30/2008
15. Bromodichloromethane	SW8260B	< 50		50	µg/Kg-dry	1	GCP	10/30/2008
16. Bromoform	SW8260B	< 50		50	µg/Kg-dry	1	GCP	10/30/2008
17. Bromomethane	SW8260B	< 50		50	µg/Kg-dry	1	GCP	10/30/2008
18. Carbon tetrachloride	SW8260B	< 50		50	µg/Kg-dry	1	GCP	10/30/2008
19. Chlorobenzene	SW8260B	< 50		50	µg/Kg-dry	1	GCP	10/30/2008
20. Chloroethane	SW8260B	< 50		50	µg/Kg-dry	1	GCP	10/30/2008
21. Chloroform	SW8260B	< 50		50	µg/Kg-dry	1	GCP	10/30/2008
22. Chloromethane	SW8260B	< 50		50	µg/Kg-dry	1	GCP	10/30/2008
23. cis-1,2-Dichloroethene	SW8260B	< 50		50	µg/Kg-dry	1	GCP	10/30/2008
24. cis-1,3-Dichloropropene	SW8260B	< 50		50	µg/Kg-dry	1	GCP	10/30/2008
25. Dibromochloromethane	SW8260B	< 50		50	µg/Kg-dry	1	GCP	10/30/2008
26. Ethylbenzene	SW8260B	< 50		50	µg/Kg-dry	1	GCP	10/30/2008
27. m,p-Xylene	SW8260B	< 100		100	µg/Kg-dry	1	GCP	10/30/2008
28. Methyl tert-butyl ether	SW8260B	< 250		250	µg/Kg-dry	1	GCP	10/30/2008
29. Methylene chloride	SW8260B	< 100		100	µg/Kg-dry	1	GCP	10/30/2008
30. o-Xylene	SW8260B	< 50		50	µg/Kg-dry	1	GCP	10/30/2008
31. Tetrachloroethene	SW8260B	2,000		50	µg/Kg-dry	1	GCP	10/30/2008
32. Toluene	SW8260B	< 50		50	µg/Kg-dry	1	GCP	10/30/2008
33. trans-1,2-Dichloroethene	SW8260B	< 50		50	µg/Kg-dry	1	GCP	10/30/2008
34. trans-1,3-Dichloropropene	SW8260B	< 50		50	µg/Kg-dry	1	GCP	10/30/2008
35. Trichloroethene	SW8260B	< 50		50	µg/Kg-dry	1	GCP	10/30/2008
36. Trichlorofluoromethane	SW8260B	< 50		50	µg/Kg-dry	1	GCP	10/30/2008
37. Vinyl chloride	SW8260B	< 40		40	µg/Kg-dry	1	GCP	10/30/2008

Definitions: PQL - Practical Quantitation Limit
DF - Dilution Factor

Qualifiers (Q): J - Detected below PQL but above MDL: Estimated
S - Spike Recovery Outside Acceptance Limits
B - Analyte detected in associated Method Blank
N - See case narrative for explanation

This report shall not be reproduced except in full, without the written approval of BIO-CHEM Laboratories, Inc.

Note: The sample results reported are based on the sample aliquot(s) tested.

BIO-CHEM Laboratories, Inc.

Date: *10/31/2008*

ANALYTICAL REPORT

CLIENT: DeLisle Associates Ltd.
Lab Order: 0810221
Project: Goodwill
Lab Sample ID: 0810221-14A

Project Number: EN08-044
Client Sample ID: EN08-044-12
Collection Date: 10/23/2008
Matrix: SOIL

Analyses	Method Ref.	Result	Q	PQL	Units	DF	Analyst	Date
Volatiles by GC/MS (5035)								
1. 1,1,1-Trichloroethane	SW8260B	< 50		50	µg/Kg-dry	1	GCP	10/30/2008
2. 1,1,2,2-Tetrachloroethane	SW8260B	< 50		50	µg/Kg-dry	1	GCP	10/30/2008
3. 1,1,2-Trichloroethane	SW8260B	< 50		50	µg/Kg-dry	1	GCP	10/30/2008
4. 1,1-Dichloroethane	SW8260B	< 50		50	µg/Kg-dry	1	GCP	10/30/2008
5. 1,1-Dichloroethene	SW8260B	< 50		50	µg/Kg-dry	1	GCP	10/30/2008
6. 1,2,4-Trimethylbenzene	SW8260B	< 50		50	µg/Kg-dry	1	GCP	10/30/2008
7. 1,2-Dibromoethane	SW8260B	< 50		50	µg/Kg-dry	1	GCP	10/30/2008
8. 1,2-Dichlorobenzene	SW8260B	< 50		50	µg/Kg-dry	1	GCP	10/30/2008
9. 1,2-Dichloroethane	SW8260B	< 50		50	µg/Kg-dry	1	GCP	10/30/2008
10. 1,2-Dichloropropane	SW8260B	< 50		50	µg/Kg-dry	1	GCP	10/30/2008
11. 1,3,5-Trimethylbenzene	SW8260B	< 50		50	µg/Kg-dry	1	GCP	10/30/2008
12. 1,3-Dichlorobenzene	SW8260B	< 50		50	µg/Kg-dry	1	GCP	10/30/2008
13. 1,4-Dichlorobenzene	SW8260B	< 50		50	µg/Kg-dry	1	GCP	10/30/2008
14. Benzene	SW8260B	< 50		50	µg/Kg-dry	1	GCP	10/30/2008
15. Bromodichloromethane	SW8260B	< 50		50	µg/Kg-dry	1	GCP	10/30/2008
16. Bromoform	SW8260B	< 50		50	µg/Kg-dry	1	GCP	10/30/2008
17. Bromomethane	SW8260B	< 50		50	µg/Kg-dry	1	GCP	10/30/2008
18. Carbon tetrachloride	SW8260B	< 50		50	µg/Kg-dry	1	GCP	10/30/2008
19. Chlorobenzene	SW8260B	< 50		50	µg/Kg-dry	1	GCP	10/30/2008
20. Chloroethane	SW8260B	< 50		50	µg/Kg-dry	1	GCP	10/30/2008
21. Chloroform	SW8260B	< 50		50	µg/Kg-dry	1	GCP	10/30/2008
22. Chloromethane	SW8260B	< 50		50	µg/Kg-dry	1	GCP	10/30/2008
23. cis-1,2-Dichloroethene	SW8260B	< 50		50	µg/Kg-dry	1	GCP	10/30/2008
24. cis-1,3-Dichloropropene	SW8260B	< 50		50	µg/Kg-dry	1	GCP	10/30/2008
25. Dibromochloromethane	SW8260B	< 50		50	µg/Kg-dry	1	GCP	10/30/2008
26. Ethylbenzene	SW8260B	< 50		50	µg/Kg-dry	1	GCP	10/30/2008
27. m,p-Xylene	SW8260B	< 100		100	µg/Kg-dry	1	GCP	10/30/2008
28. Methyl tert-butyl ether	SW8260B	< 250		250	µg/Kg-dry	1	GCP	10/30/2008
29. Methylene chloride	SW8260B	< 100		100	µg/Kg-dry	1	GCP	10/30/2008
30. o-Xylene	SW8260B	< 50		50	µg/Kg-dry	1	GCP	10/30/2008
31. Tetrachloroethene	SW8260B	82		50	µg/Kg-dry	1	GCP	10/30/2008
32. Toluene	SW8260B	< 50		50	µg/Kg-dry	1	GCP	10/30/2008
33. trans-1,2-Dichloroethene	SW8260B	< 50		50	µg/Kg-dry	1	GCP	10/30/2008
34. trans-1,3-Dichloropropene	SW8260B	< 50		50	µg/Kg-dry	1	GCP	10/30/2008
35. Trichloroethene	SW8260B	< 50		50	µg/Kg-dry	1	GCP	10/30/2008
36. Trichlorofluoromethane	SW8260B	< 50		50	µg/Kg-dry	1	GCP	10/30/2008
37. Vinyl chloride	SW8260B	< 40		40	µg/Kg-dry	1	GCP	10/30/2008

Definitions: PQL - Practical Quantitation Limit
DF - Dilution Factor

Qualifiers (Q): J - Detected below PQL but above MDL: Estimated
S - Spike Recovery Outside Acceptance Limits
B - Analyte detected in associated Method Blank
N - See case narrative for explanation

This report shall not be reproduced except in full, without the written approval of BIO-CHEM Laboratories, Inc.

Note: The sample results reported are based on the sample aliquot(s) tested.

BIO-CHEM Laboratories, Inc.

Date: *10/31/2008*

ANALYTICAL REPORT

CLIENT: DeLisle Associates Ltd.
Lab Order: 0810221
Project: Goodwill
Lab Sample ID: 0810221-15A

Project Number: EN08-044
Client Sample ID: EN08-044-13
Collection Date: 10/23/2008
Matrix: SOIL

Analyses	Method Ref.	Result	Q	PQL	Units	DF	Analyst	Date
Volatiles by GC/MS (5035)								
1. 1,1,1-Trichloroethane	SW8260B	< 50		50	µg/Kg-dry	1	GCP	10/30/2008
2. 1,1,2,2-Tetrachloroethane	SW8260B	< 50		50	µg/Kg-dry	1	GCP	10/30/2008
3. 1,1,2-Trichloroethane	SW8260B	< 50		50	µg/Kg-dry	1	GCP	10/30/2008
4. 1,1-Dichloroethane	SW8260B	< 50		50	µg/Kg-dry	1	GCP	10/30/2008
5. 1,1-Dichloroethene	SW8260B	< 50		50	µg/Kg-dry	1	GCP	10/30/2008
6. 1,2,4-Trimethylbenzene	SW8260B	110		50	µg/Kg-dry	1	GCP	10/30/2008
7. 1,2-Dibromoethane	SW8260B	< 50		50	µg/Kg-dry	1	GCP	10/30/2008
8. 1,2-Dichlorobenzene	SW8260B	< 50		50	µg/Kg-dry	1	GCP	10/30/2008
9. 1,2-Dichloroethane	SW8260B	< 50		50	µg/Kg-dry	1	GCP	10/30/2008
10. 1,2-Dichloropropane	SW8260B	< 50		50	µg/Kg-dry	1	GCP	10/30/2008
11. 1,3,5-Trimethylbenzene	SW8260B	< 50		50	µg/Kg-dry	1	GCP	10/30/2008
12. 1,3-Dichlorobenzene	SW8260B	< 50		50	µg/Kg-dry	1	GCP	10/30/2008
13. 1,4-Dichlorobenzene	SW8260B	< 50		50	µg/Kg-dry	1	GCP	10/30/2008
14. Benzene	SW8260B	< 50		50	µg/Kg-dry	1	GCP	10/30/2008
15. Bromodichloromethane	SW8260B	< 50		50	µg/Kg-dry	1	GCP	10/30/2008
16. Bromoform	SW8260B	< 50		50	µg/Kg-dry	1	GCP	10/30/2008
17. Bromomethane	SW8260B	< 50		50	µg/Kg-dry	1	GCP	10/30/2008
18. Carbon tetrachloride	SW8260B	< 50		50	µg/Kg-dry	1	GCP	10/30/2008
19. Chlorobenzene	SW8260B	< 50		50	µg/Kg-dry	1	GCP	10/30/2008
20. Chloroethane	SW8260B	< 50		50	µg/Kg-dry	1	GCP	10/30/2008
21. Chloroform	SW8260B	< 50		50	µg/Kg-dry	1	GCP	10/30/2008
22. Chloromethane	SW8260B	< 50		50	µg/Kg-dry	1	GCP	10/30/2008
23. cis-1,2-Dichloroethene	SW8260B	< 50		50	µg/Kg-dry	1	GCP	10/30/2008
24. cis-1,3-Dichloropropene	SW8260B	< 50		50	µg/Kg-dry	1	GCP	10/30/2008
25. Dibromochloromethane	SW8260B	< 50		50	µg/Kg-dry	1	GCP	10/30/2008
26. Ethylbenzene	SW8260B	< 50		50	µg/Kg-dry	1	GCP	10/30/2008
27. m,p-Xylene	SW8260B	< 100		100	µg/Kg-dry	1	GCP	10/30/2008
28. Methyl tert-butyl ether	SW8260B	< 250		250	µg/Kg-dry	1	GCP	10/30/2008
29. Methylene chloride	SW8260B	< 100		100	µg/Kg-dry	1	GCP	10/30/2008
30. o-Xylene	SW8260B	< 50		50	µg/Kg-dry	1	GCP	10/30/2008
31. Tetrachloroethene	SW8260B	61,000		1,000	µg/Kg-dry	20	GCP	10/31/2008
32. Toluene	SW8260B	< 50		50	µg/Kg-dry	1	GCP	10/30/2008
33. trans-1,2-Dichloroethene	SW8260B	< 50		50	µg/Kg-dry	1	GCP	10/30/2008
34. trans-1,3-Dichloropropene	SW8260B	< 50		50	µg/Kg-dry	1	GCP	10/30/2008
35. Trichloroethene	SW8260B	2,500		50	µg/Kg-dry	1	GCP	10/30/2008
36. Trichlorofluoromethane	SW8260B	< 50		50	µg/Kg-dry	1	GCP	10/30/2008
37. Vinyl chloride	SW8260B	< 40		40	µg/Kg-dry	1	GCP	10/30/2008

Definitions: PQL - Practical Quantitation Limit
DF - Dilution Factor

Qualifiers (Q): J - Detected below PQL but above MDL: Estimated
S - Spike Recovery Outside Acceptance Limits
B - Analyte detected in associated Method Blank
N - See case narrative for explanation

This report shall not be reproduced except in full, without the written approval of BIO-CHEM Laboratories, Inc.

Note: The sample results reported are based on the sample aliquot(s) tested.

BIO-CHEM Laboratories, Inc.

Date: *10/31/2008*

ANALYTICAL REPORT

CLIENT: DeLisle Associates Ltd.
Lab Order: 0810221
Project: Goodwill
Lab Sample ID: 0810221-16A

Project Number: EN08-044
Client Sample ID: EN08-044-14
Collection Date: 10/23/2008
Matrix: SOIL

Analyses	Method Ref.	Result	Q	PQL	Units	DF	Analyst	Date
Volatiles by GC/MS (5035)								
1. 1,1,1-Trichloroethane	SW8260B	< 50		50	µg/Kg-dry	1	GCP	10/31/2008
2. 1,1,2,2-Tetrachloroethane	SW8260B	< 50		50	µg/Kg-dry	1	GCP	10/31/2008
3. 1,1,2-Trichloroethane	SW8260B	< 50		50	µg/Kg-dry	1	GCP	10/31/2008
4. 1,1-Dichloroethane	SW8260B	< 50		50	µg/Kg-dry	1	GCP	10/31/2008
5. 1,1-Dichloroethene	SW8260B	< 50		50	µg/Kg-dry	1	GCP	10/31/2008
6. 1,2,4-Trimethylbenzene	SW8260B	< 50		50	µg/Kg-dry	1	GCP	10/31/2008
7. 1,2-Dibromoethane	SW8260B	< 50		50	µg/Kg-dry	1	GCP	10/31/2008
8. 1,2-Dichlorobenzene	SW8260B	< 50		50	µg/Kg-dry	1	GCP	10/31/2008
9. 1,2-Dichloroethane	SW8260B	< 50		50	µg/Kg-dry	1	GCP	10/31/2008
10. 1,2-Dichloropropane	SW8260B	< 50		50	µg/Kg-dry	1	GCP	10/31/2008
11. 1,3,5-Trimethylbenzene	SW8260B	< 50		50	µg/Kg-dry	1	GCP	10/31/2008
12. 1,3-Dichlorobenzene	SW8260B	< 50		50	µg/Kg-dry	1	GCP	10/31/2008
13. 1,4-Dichlorobenzene	SW8260B	< 50		50	µg/Kg-dry	1	GCP	10/31/2008
14. Benzene	SW8260B	< 50		50	µg/Kg-dry	1	GCP	10/31/2008
15. Bromodichloromethane	SW8260B	< 50		50	µg/Kg-dry	1	GCP	10/31/2008
16. Bromoform	SW8260B	< 50		50	µg/Kg-dry	1	GCP	10/31/2008
17. Bromomethane	SW8260B	< 50		50	µg/Kg-dry	1	GCP	10/31/2008
18. Carbon tetrachloride	SW8260B	< 50		50	µg/Kg-dry	1	GCP	10/31/2008
19. Chlorobenzene	SW8260B	< 50		50	µg/Kg-dry	1	GCP	10/31/2008
20. Chloroethane	SW8260B	< 50		50	µg/Kg-dry	1	GCP	10/31/2008
21. Chloroform	SW8260B	< 50		50	µg/Kg-dry	1	GCP	10/31/2008
22. Chloromethane	SW8260B	< 50		50	µg/Kg-dry	1	GCP	10/31/2008
23. cis-1,2-Dichloroethene	SW8260B	< 50		50	µg/Kg-dry	1	GCP	10/31/2008
24. cis-1,3-Dichloropropene	SW8260B	< 50		50	µg/Kg-dry	1	GCP	10/31/2008
25. Dibromochloromethane	SW8260B	< 50		50	µg/Kg-dry	1	GCP	10/31/2008
26. Ethylbenzene	SW8260B	< 50		50	µg/Kg-dry	1	GCP	10/31/2008
27. m,p-Xylene	SW8260B	< 100		100	µg/Kg-dry	1	GCP	10/31/2008
28. Methyl tert-butyl ether	SW8260B	< 250		250	µg/Kg-dry	1	GCP	10/31/2008
29. Methylene chloride	SW8260B	< 100		100	µg/Kg-dry	1	GCP	10/31/2008
30. o-Xylene	SW8260B	< 50		50	µg/Kg-dry	1	GCP	10/31/2008
31. Tetrachloroethene	SW8260B	940		50	µg/Kg-dry	1	GCP	10/31/2008
32. Toluene	SW8260B	< 50		50	µg/Kg-dry	1	GCP	10/31/2008
33. trans-1,2-Dichloroethene	SW8260B	< 50		50	µg/Kg-dry	1	GCP	10/31/2008
34. trans-1,3-Dichloropropene	SW8260B	< 50		50	µg/Kg-dry	1	GCP	10/31/2008
35. Trichloroethene	SW8260B	< 50		50	µg/Kg-dry	1	GCP	10/31/2008
36. Trichlorofluoromethane	SW8260B	< 50		50	µg/Kg-dry	1	GCP	10/31/2008
37. Vinyl chloride	SW8260B	< 40		40	µg/Kg-dry	1	GCP	10/31/2008

Definitions: PQL - Practical Quantitation Limit
DF - Dilution Factor

Qualifiers (Q): J - Detected below PQL but above MDL: Estimated
S - Spike Recovery Outside Acceptance Limits
B - Analyte detected in associated Method Blank
N - See case narrative for explanation

This report shall not be reproduced except in full, without the written approval of BIO-CHEM Laboratories, Inc.

Note: The sample results reported are based on the sample aliquot(s) tested.

BIO-CHEM Laboratories, Inc.

10/31/2008

Lab Order: 0810221
Client: DeLisle Associates Ltd.
Project: Goodwill

ANALYTICAL DETAIL REPORT

Sample ID	Client Sample ID	Matrix	Test Name	Date Sampled	TCLP/SPLP Date	Prep Date	QC Batch	Analysis Date	Analytical Batch
0810221-01A	EN08-044-01	Aqueous	Volatiles by GC/MS	10/22/2008			R58906	10/26/2008	GCMS_Y_081025B
0810221-02A	EN08-044-02	Aqueous	Volatiles by GC/MS	10/22/2008			R58906	10/26/2008	GCMS_Y_081025B
0810221-03A	EN08-044-03	Aqueous	Volatiles by GC/MS	10/22/2008			R58906	10/26/2008	GCMS_Y_081025B
0810221-04A	EN08-044-04	Aqueous	Volatiles by GC/MS	10/22/2008			R58906	10/26/2008	GCMS_Y_081025B
0810221-05A	EN08-044-05	Aqueous	Volatiles by GC/MS	10/22/2008			R58965	10/30/2008	GCMS_Y_081029B
0810221-06A	EN08-044-06	Aqueous	Volatiles by GC/MS	10/22/2008			R58965	10/30/2008	GCMS_Y_081029B
0810221-07A	EN08-044-07	Aqueous	Volatiles by GC/MS	10/22/2008			R58965	10/30/2008	GCMS_Y_081029B
0810221-08A	EN08-044-15	Aqueous	Volatiles by GC/MS	10/23/2008			R58906	10/26/2008	GCMS_Y_081025B
0810221-09A	EN08-044-16	Aqueous	Volatiles by GC/MS	10/23/2008			R58906	10/26/2008	GCMS_Y_081025B
0810221-10A	EN08-044-08	Soil	Volatiles by GC/MS (5035)	10/22/2008		10/29/2008	27278	10/30/2008	GCMS_Q_081030A
0810221-11A	EN08-044-09	Soil	Volatiles by GC/MS (5035)	10/22/2008		10/29/2008	27278	10/31/2008	GCMS_Q_081031A
	EN08-044-09	Soil	Volatiles by GC/MS (5035)	10/22/2008		10/29/2008	27278	10/30/2008	GCMS_Q_081030A
0810221-12A	EN08-044-10	Soil	Volatiles by GC/MS (5035)	10/23/2008		10/29/2008	27278	10/30/2008	GCMS_Q_081030A
0810221-13A	EN08-044-11	Soil	Volatiles by GC/MS (5035)	10/23/2008		10/29/2008	27278	10/30/2008	GCMS_Q_081030A
0810221-14A	EN08-044-12	Soil	Volatiles by GC/MS (5035)	10/23/2008		10/29/2008	27278	10/30/2008	GCMS_Q_081030A
0810221-15A	EN08-044-13	Soil	Volatiles by GC/MS (5035)	10/23/2008		10/29/2008	27278	10/30/2008	GCMS_Q_081030A
	EN08-044-13	Soil	Volatiles by GC/MS (5035)	10/23/2008		10/29/2008	27278	10/31/2008	GCMS_Q_081031A
0810221-16A	EN08-044-14	Soil	Volatiles by GC/MS (5035)	10/23/2008		10/29/2008	27278	10/31/2008	GCMS_Q_081031A
	EN08-044-14	Soil	Volatiles by GC/MS (5035)	10/23/2008		10/29/2008	27278	10/30/2008	GCMS_Q_081030A

BIO-CHEM
ENVIRONMENTAL
ANALYTICAL
LABORATORIES

1049 - 28th Street SE
Grand Rapids, MI 49508
Ph: 616/248-4900
Toll Free: 800/362-LABS
Fax: 616/248-4904

November 07, 2008

Andy Graham
DeLisle Associates Ltd.
5050 Sprinkle Rd.
Portage, MI 49002

TEL: (269) 373-4500
FAX (616) 373-1044

RE: Goodwill Industries

Dear Andy Graham:

Order No.: 0810288

BIO-CHEM Laboratories, Inc. received 18 samples on 10/31/2008 for the analyses presented in the following report.

There were no problems with the analyses and all data for associated QC met EPA or laboratory specifications except where noted in the Case Narrative.

If you have any questions regarding these tests results, please feel free to call.

Please note that unless otherwise instructed, residual samples will be held for sixty (60) days from the original report date. At that time, all non-hazardous samples will be disposed of in accordance with federal, state and local regulations and ordinances, and hazardous samples shall be returned to you. Please contact the laboratory within thirty (30) days if other arrangements for sample retention need to be made.

Sincerely,

Cindy Euwema

Cindy Euwema
Office Manager

Working with you to ensure a better tomorrow.

0810288

Bio Chem LABORATORIES, INC.

Chain of Custody

1049 28th Street SE • Grand Rapids, MI 49508
Ph: (616) 248-4900 • Toll Free: 800-362-LABS
Fax: (616) 248-4904

P.O. # 08-321

Firm Name: DeLisle Associates LTD	Turn around time: Standard	Project Number: EN08-044	
		Date: 10-28-08	Date Due:
Firm Address: 5050 Sprinkle Rd	Project Name: Goodwill Industries		
City, State, Zip: Portage MI 49002	State Samples Taken From:		
Phone: 269 373-4500 / Fax: 269 373-1044	Contact Person: Andy Graham		

Item No.	Lab I.D.	Client Sample Number	Date Taken	Time Taken	Sample Description (sample type: water, soil, other)	Number of Containers	Analysis Desired (One per line): VOCs (8260)	Remarks
1	01	EN08-044-17	10.28.08	9:50	soil	12	X	10ml meth
2	02	EN08-044-18		10:00	soil	12	X	Field methanol preserv.
3	03	EN08-044-19		10:15	soil	12	X	"
4	04	EN08-044-20		10:50	soil	12	X	"
5	07	EN08-044-21		11:14	Groundwater	2	X	
6	08	EN08-044-22		11:25	Groundwater	2	X	
7	09	EN08-044-23		11:57	Groundwater	2	X	
8	10	EN08-044-24		1300	Groundwater	2	X	
9	11	EN08-044-25		1324	Groundwater	2	X	
10	12	EN08-044-26		1348	Groundwater	2	X	

Released by	Received by	Date	Time
Andy Graham	[illegible]	10-31-08	7:25

Laboratory use only

☐ Blue Ice ____ °

☒ Regular Ice

☐ No Coolant

FRANKLIN PRESS 45251 2/09

0810288

Bio Chem LABORATORIES, INC.

Chain of Custody

1049 28th Street SE • Grand Rapids, MI 49508
Ph: (616) 248-4900 • Toll Free: 800-362-LABS
Fax: (616) 248-4904

P.O. # 08-321

Firm Name	Delisle Associates LTD
Firm Address	5050 Sprinkle Rd
City, State, Zip	Portage, MI 49002
Phone	269 373-4500
Fax	269 373-1044
Turn around time	STD
Project Name	Goodwill Industries
State Samples Taken From	
Contact Person	Andy Graham
Project Number	EN08-044
Date	10.28.08
Date Due	

Item No.	Lab I.D.	Client Sample Number	Date Taken	Time Taken	Sample Description (sample type: water, soil, other)	Number of Containers	Analysis Desired (One per line): VOCs (8260)									Remarks
1	13	EN08-044-27	10.28.08	1415	Groundwater	2	X									
2	14	EN08-044-28	↓	1505	"	2	X									
3	15	EN08-044-29	↓	1527	"	2	X									
4	05	EN08-044-30	↓	1600	Soil	+2	X									Field Method Preserv.
5	06	EN08-044-31	↓	1625	Soil	+2	X									"
6	16	EN08-044-32	↓	1639	Groundwater	2	X									
7	17	EN08-044-33	↓	1652	"	2	X									
8	18	EN08-044-34	↓	1726	"	2	X									
9																
10																

Released by	Received by	Date	Time
[illegible]	[illegible]	10-31-08	8:35

Laboratory use only

☐ Blue Ice ____°

☐ Regular Ice

☐ No Coolant

FRANKLIN PRESS 45267.2C8

BIO-CHEM Laboratories, Inc.

Date: *07-Nov-08*

CLIENT: DeLisle Associates Ltd.
Project: Goodwill Industries
Lab Order: 0810288

Work Order Sample Summary

Lab Sample ID	Client Sample ID	Matrix	Collection Date	Date Received
0810288-01A	EN08-044-17	Soil	10/28/2008	10/31/2008
0810288-02A	EN08-044-18	Soil	10/28/2008	10/31/2008
0810288-03A	EN08-044-19	Soil	10/28/2008	10/31/2008
0810288-04A	EN08-044-20	Soil	10/28/2008	10/31/2008
0810288-05A	EN08-044-30	Soil	10/28/2008	10/31/2008
0810288-06A	EN08-044-31	Soil	10/28/2008	10/31/2008
0810288-07A	EN08-044-21	Aqueous	10/28/2008	10/31/2008
0810288-08A	EN08-044-22	Aqueous	10/28/2008	10/31/2008
0810288-09A	EN08-044-23	Aqueous	10/28/2008	10/31/2008
0810288-10A	EN08-044-24	Aqueous	10/28/2008	10/31/2008
0810288-11A	EN08-044-25	Aqueous	10/28/2008	10/31/2008
0810288-12A	EN08-044-26	Aqueous	10/28/2008	10/31/2008
0810288-13A	EN08-044-27	Aqueous	10/28/2008	10/31/2008
0810288-14A	EN08-044-28	Aqueous	10/28/2008	10/31/2008
0810288-15A	EN08-044-29	Aqueous	10/28/2008	10/31/2008
0810288-16A	EN08-044-32	Aqueous	10/28/2008	10/31/2008
0810288-17A	EN08-044-33	Aqueous	10/28/2008	10/31/2008
0810288-18A	EN08-044-34	Aqueous	10/28/2008	10/31/2008

BIO-CHEM Laboratories, Inc.

Date: *07-Nov-08*

CLIENT: DeLisle Associates Ltd.
Project: Goodwill Industries
Lab Order: 0810288

CASE NARRATIVE

Samples are routinely analyzed using methods outlined in the following references:

(SW) Test Methods for Evaluating Solid Waste, Physical/Chemical Methods, SW846, 3rd Ed.
(E) Methods for Chemical Analysis of Water and Wastes, EPA-600/4-79-020.
(A) Standard Methods for the Examination of Water and Wastewater, APHA, 18th Ed.
(D) Annual Book of ASTM Standards.

Specific methods utilized for this project are provided in the analytical report and are identified by the reference document abbreviation ( ) followed by the method number.

All QA/QC and sample analyses met method, laboratory and/or regulatory data quality objectives unless otherwise specified below.

No data qualifications required.

BIO-CHEM Laboratories, Inc.

Date: 11/7/2008

ANALYTICAL REPORT

CLIENT: DeLisle Associates Ltd.
Lab Order: 0810288
Project: Goodwill Industries
Lab Sample ID: 0810288-01A

Project Number: EN08-044
Client Sample ID: EN08-044-17 BA-10 4'
Collection Date: 10/28/2008
Matrix: SOIL

Analyses	Method Ref.	Result	Q	PQL	Units	DF	Analyst	Date
Volatiles by GC/MS (5035)								
1. 1,1,1-Trichloroethane	SW8260B	< 50		50	µg/Kg-dry	1	GCP	11/4/2008
2. 1,1,2,2-Tetrachloroethane	SW8260B	< 50		50	µg/Kg-dry	1	GCP	11/4/2008
3. 1,1,2-Trichloroethane	SW8260B	< 50		50	µg/Kg-dry	1	GCP	11/4/2008
4. 1,1-Dichloroethane	SW8260B	< 50		50	µg/Kg-dry	1	GCP	11/4/2008
5. 1,1-Dichloroethene	SW8260B	< 50		50	µg/Kg-dry	1	GCP	11/4/2008
6. 1,2,4-Trimethylbenzene	SW8260B	< 50		50	µg/Kg-dry	1	GCP	11/4/2008
7. 1,2-Dibromoethane	SW8260B	< 50		50	µg/Kg-dry	1	GCP	11/4/2008
8. 1,2-Dichlorobenzene	SW8260B	< 50		50	µg/Kg-dry	1	GCP	11/4/2008
9. 1,2-Dichloroethane	SW8260B	< 50		50	µg/Kg-dry	1	GCP	11/4/2008
10. 1,2-Dichloropropane	SW8260B	< 50		50	µg/Kg-dry	1	GCP	11/4/2008
11. 1,3,5-Trimethylbenzene	SW8260B	< 50		50	µg/Kg-dry	1	GCP	11/4/2008
12. 1,3-Dichlorobenzene	SW8260B	< 50		50	µg/Kg-dry	1	GCP	11/4/2008
13. 1,4-Dichlorobenzene	SW8260B	< 50		50	µg/Kg-dry	1	GCP	11/4/2008
14. Benzene	SW8260B	< 50		50	µg/Kg-dry	1	GCP	11/4/2008
15. Bromodichloromethane	SW8260B	< 50		50	µg/Kg-dry	1	GCP	11/4/2008
16. Bromoform	SW8260B	< 50		50	µg/Kg-dry	1	GCP	11/4/2008
17. Bromomethane	SW8260B	< 50		50	µg/Kg-dry	1	GCP	11/4/2008
18. Carbon tetrachloride	SW8260B	< 50		50	µg/Kg-dry	1	GCP	11/4/2008
19. Chlorobenzene	SW8260B	< 50		50	µg/Kg-dry	1	GCP	11/4/2008
20. Chloroethane	SW8260B	< 50		50	µg/Kg-dry	1	GCP	11/4/2008
21. Chloroform	SW8260B	< 50		50	µg/Kg-dry	1	GCP	11/4/2008
22. Chloromethane	SW8260B	< 50		50	µg/Kg-dry	1	GCP	11/4/2008
23. cis-1,2-Dichloroethene	SW8260B	< 50		50	µg/Kg-dry	1	GCP	11/4/2008
24. cis-1,3-Dichloropropene	SW8260B	< 50		50	µg/Kg-dry	1	GCP	11/4/2008
25. Dibromochloromethane	SW8260B	< 50		50	µg/Kg-dry	1	GCP	11/4/2008
26. Ethylbenzene	SW8260B	< 50		50	µg/Kg-dry	1	GCP	11/4/2008
27. m,p-Xylene	SW8260B	< 100		100	µg/Kg-dry	1	GCP	11/4/2008
28. Methyl tert-butyl ether	SW8260B	< 250		250	µg/Kg-dry	1	GCP	11/4/2008
29. Methylene chloride	SW8260B	< 100		100	µg/Kg-dry	1	GCP	11/4/2008
30. o-Xylene	SW8260B	< 50		50	µg/Kg-dry	1	GCP	11/4/2008
31. Tetrachloroethene	SW8260B	< 50		50	µg/Kg-dry	1	GCP	11/4/2008
32. Toluene	SW8260B	< 50		50	µg/Kg-dry	1	GCP	11/4/2008
33. trans-1,2-Dichloroethene	SW8260B	< 50		50	µg/Kg-dry	1	GCP	11/4/2008
34. trans-1,3-Dichloropropene	SW8260B	< 50		50	µg/Kg-dry	1	GCP	11/4/2008
35. Trichloroethene	SW8260B	< 50		50	µg/Kg-dry	1	GCP	11/4/2008
36. Trichlorofluoromethane	SW8260B	< 50		50	µg/Kg-dry	1	GCP	11/4/2008
37. Vinyl chloride	SW8260B	< 40		40	µg/Kg-dry	1	GCP	11/4/2008

Definitions: PQL - Practical Quantitation Limit
DF - Dilution Factor

Qualifiers (Q): J - Detected below PQL but above MDL: Estimated
S - Spike Recovery Outside Acceptance Limits
B - Analyte detected in associated Method Blank
N - See case narrative for explanation

This report shall not be reproduced except in full, without the written approval of BIO-CHEM Laboratories, Inc.

Note: The sample results reported are based on the sample aliquot(s) tested.

BIO-CHEM Laboratories, Inc.

Date: 11/7/2008

ANALYTICAL REPORT

CLIENT: DeLisle Associates Ltd.
Lab Order: 0810288
Project: Goodwill Industries
Lab Sample ID: 0810288-02A

Project Number: EN08-044
Client Sample ID: EN08-044-18 BH-11 4'
Collection Date: 10/28/2008
Matrix: SOIL

Analyses	Method Ref.	Result	Q	PQL	Units	DF	Analyst	Date
Volatiles by GC/MS (5035)								
1. 1,1,1-Trichloroethane	SW8260B	< 50		50	µg/Kg-dry	1	GCP	11/4/2008
2. 1,1,2,2-Tetrachloroethane	SW8260B	< 50		50	µg/Kg-dry	1	GCP	11/4/2008
3. 1,1,2-Trichloroethane	SW8260B	< 50		50	µg/Kg-dry	1	GCP	11/4/2008
4. 1,1-Dichloroethane	SW8260B	< 50		50	µg/Kg-dry	1	GCP	11/4/2008
5. 1,1-Dichloroethene	SW8260B	< 50		50	µg/Kg-dry	1	GCP	11/4/2008
6. 1,2,4-Trimethylbenzene	SW8260B	< 50		50	µg/Kg-dry	1	GCP	11/4/2008
7. 1,2-Dibromoethane	SW8260B	< 50		50	µg/Kg-dry	1	GCP	11/4/2008
8. 1,2-Dichlorobenzene	SW8260B	< 50		50	µg/Kg-dry	1	GCP	11/4/2008
9. 1,2-Dichloroethane	SW8260B	< 50		50	µg/Kg-dry	1	GCP	11/4/2008
10. 1,2-Dichloropropane	SW8260B	< 50		50	µg/Kg-dry	1	GCP	11/4/2008
11. 1,3,5-Trimethylbenzene	SW8260B	< 50		50	µg/Kg-dry	1	GCP	11/4/2008
12. 1,3-Dichlorobenzene	SW8260B	< 50		50	µg/Kg-dry	1	GCP	11/4/2008
13. 1,4-Dichlorobenzene	SW8260B	< 50		50	µg/Kg-dry	1	GCP	11/4/2008
14. Benzene	SW8260B	< 50		50	µg/Kg-dry	1	GCP	11/4/2008
15. Bromodichloromethane	SW8260B	< 50		50	µg/Kg-dry	1	GCP	11/4/2008
16. Bromoform	SW8260B	< 50		50	µg/Kg-dry	1	GCP	11/4/2008
17. Bromomethane	SW8260B	< 50		50	µg/Kg-dry	1	GCP	11/4/2008
18. Carbon tetrachloride	SW8260B	< 50		50	µg/Kg-dry	1	GCP	11/4/2008
19. Chlorobenzene	SW8260B	< 50		50	µg/Kg-dry	1	GCP	11/4/2008
20. Chloroethane	SW8260B	< 50		50	µg/Kg-dry	1	GCP	11/4/2008
21. Chloroform	SW8260B	< 50		50	µg/Kg-dry	1	GCP	11/4/2008
22. Chloromethane	SW8260B	< 50		50	µg/Kg-dry	1	GCP	11/4/2008
23. cis-1,2-Dichloroethene	SW8260B	< 50		50	µg/Kg-dry	1	GCP	11/4/2008
24. cis-1,3-Dichloropropene	SW8260B	< 50		50	µg/Kg-dry	1	GCP	11/4/2008
25. Dibromochloromethane	SW8260B	< 50		50	µg/Kg-dry	1	GCP	11/4/2008
26. Ethylbenzene	SW8260B	< 50		50	µg/Kg-dry	1	GCP	11/4/2008
27. m,p-Xylene	SW8260B	< 50		50	µg/Kg-dry	1	GCP	11/4/2008
28. Methyl tert-butyl ether	SW8260B	< 100		100	µg/Kg-dry	1	GCP	11/4/2008
29. Methylene chloride	SW8260B	< 250		250	µg/Kg-dry	1	GCP	11/4/2008
30. o-Xylene	SW8260B	< 100		100	µg/Kg-dry	1	GCP	11/4/2008
31. Tetrachloroethene	SW8260B	< 50		50	µg/Kg-dry	1	GCP	11/4/2008
32. Toluene	SW8260B	< 50		50	µg/Kg-dry	1	GCP	11/4/2008
33. trans-1,2-Dichloroethene	SW8260B	< 50		50	µg/Kg-dry	1	GCP	11/4/2008
34. trans-1,3-Dichloropropene	SW8260B	< 50		50	µg/Kg-dry	1	GCP	11/4/2008
35. Trichloroethene	SW8260B	< 50		50	µg/Kg-dry	1	GCP	11/4/2008
36. Trichlorofluoromethane	SW8260B	< 50		50	µg/Kg-dry	1	GCP	11/4/2008
37. Vinyl chloride	SW8260B	< 40		40	µg/Kg-dry	1	GCP	11/4/2008

Definitions: PQL - Practical Quantitation Limit
DF - Dilution Factor

Qualifiers (Q): J - Detected below PQL but above MDL: Estimated
S - Spike Recovery Outside Acceptance Limits
B - Analyte detected in associated Method Blank
N - See case narrative for explanation

This report shall not be reproduced except in full, without the written approval of BIO-CHEM Laboratories, Inc.

Note: The sample results reported are based on the sample aliquot(s) tested.

BIO-CHEM Laboratories, Inc.

Date: 11/7/2008

ANALYTICAL REPORT

CLIENT: DeLisle Associates Ltd.
Lab Order: 0810288
Project: Goodwill Industries
Lab Sample ID: 0810288-03A

Project Number: EN08-044
Client Sample ID: EN08-044-19 BH-12 4'
Collection Date: 10/28/2008
Matrix: SOIL

Analyses	Method Ref.	Result	Q	PQL	Units	DF	Analyst	Date
Volatiles by GC/MS (5035)								
1. 1,1,1-Trichloroethane	SW8260B	< 50		50	µg/Kg-dry	1	GCP	11/6/2008
2. 1,1,2,2-Tetrachloroethane	SW8260B	< 50		50	µg/Kg-dry	1	GCP	11/6/2008
3. 1,1,2-Trichloroethane	SW8260B	< 50		50	µg/Kg-dry	1	GCP	11/6/2008
4. 1,1-Dichloroethane	SW8260B	< 50		50	µg/Kg-dry	1	GCP	11/6/2008
5. 1,1-Dichloroethene	SW8260B	< 50		50	µg/Kg-dry	1	GCP	11/6/2008
6. 1,2,4-Trimethylbenzene	SW8260B	< 50		50	µg/Kg-dry	1	GCP	11/6/2008
7. 1,2-Dibromoethane	SW8260B	< 50		50	µg/Kg-dry	1	GCP	11/6/2008
8. 1,2-Dichlorobenzene	SW8260B	< 50		50	µg/Kg-dry	1	GCP	11/6/2008
9. 1,2-Dichloroethane	SW8260B	< 50		50	µg/Kg-dry	1	GCP	11/6/2008
10. 1,2-Dichloropropane	SW8260B	< 50		50	µg/Kg-dry	1	GCP	11/6/2008
11. 1,3,5-Trimethylbenzene	SW8260B	< 50		50	µg/Kg-dry	1	GCP	11/6/2008
12. 1,3-Dichlorobenzene	SW8260B	< 50		50	µg/Kg-dry	1	GCP	11/6/2008
13. 1,4-Dichlorobenzene	SW8260B	< 50		50	µg/Kg-dry	1	GCP	11/6/2008
14. Benzene	SW8260B	< 50		50	µg/Kg-dry	1	GCP	11/6/2008
15. Bromodichloromethane	SW8260B	< 50		50	µg/Kg-dry	1	GCP	11/6/2008
16. Bromoform	SW8260B	< 50		50	µg/Kg-dry	1	GCP	11/6/2008
17. Bromomethane	SW8260B	< 50		50	µg/Kg-dry	1	GCP	11/6/2008
18. Carbon tetrachloride	SW8260B	< 50		50	µg/Kg-dry	1	GCP	11/6/2008
19. Chlorobenzene	SW8260B	< 50		50	µg/Kg-dry	1	GCP	11/6/2008
20. Chloroethane	SW8260B	< 50		50	µg/Kg-dry	1	GCP	11/6/2008
21. Chloroform	SW8260B	< 50		50	µg/Kg-dry	1	GCP	11/6/2008
22. Chloromethane	SW8260B	< 50		50	µg/Kg-dry	1	GCP	11/6/2008
23. cis-1,2-Dichloroethene	SW8260B	< 50		50	µg/Kg-dry	1	GCP	11/6/2008
24. cis-1,3-Dichloropropene	SW8260B	< 50		50	µg/Kg-dry	1	GCP	11/6/2008
25. Dibromochloromethane	SW8260B	< 50		50	µg/Kg-dry	1	GCP	11/6/2008
26. Ethylbenzene	SW8260B	< 50		50	µg/Kg-dry	1	GCP	11/6/2008
27. m,p-Xylene	SW8260B	< 100		100	µg/Kg-dry	1	GCP	11/6/2008
28. Methyl tert-butyl ether	SW8260B	< 250		250	µg/Kg-dry	1	GCP	11/6/2008
29. Methylene chloride	SW8260B	< 100		100	µg/Kg-dry	1	GCP	11/6/2008
30. o-Xylene	SW8260B	< 50		50	µg/Kg-dry	1	GCP	11/6/2008
31. Tetrachloroethene	SW8260B	810		50	µg/Kg-dry	1	GCP	11/6/2008
32. Toluene	SW8260B	< 50		50	µg/Kg-dry	1	GCP	11/6/2008
33. trans-1,2-Dichloroethene	SW8260B	< 50		50	µg/Kg-dry	1	GCP	11/6/2008
34. trans-1,3-Dichloropropene	SW8260B	< 50		50	µg/Kg-dry	1	GCP	11/6/2008
35. Trichloroethene	SW8260B	< 50		50	µg/Kg-dry	1	GCP	11/6/2008
36. Trichlorofluoromethane	SW8260B	< 50		50	µg/Kg-dry	1	GCP	11/6/2008
37. Vinyl chloride	SW8260B	< 40		40	µg/Kg-dry	1	GCP	11/6/2008

Definitions: PQL - Practical Quantitation Limit
DF - Dilution Factor

Qualifiers (Q): J - Detected below PQL but above MDL: Estimated
S - Spike Recovery Outside Acceptance Limits
B - Analyte detected in associated Method Blank
N - See case narrative for explanation

This report shall not be reproduced except in full, without the written approval of BIO-CHEM Laboratories, Inc.

Note: The sample results reported are based on the sample aliquot(s) tested.

BIO-CHEM Laboratories, Inc.

Date: 11/7/2008

ANALYTICAL REPORT

CLIENT: DeLisle Associates Ltd.
Lab Order: 0810288
Project: Goodwill Industries
Lab Sample ID: 0810288-04A

Project Number: EN08-044
Client Sample ID: EN08-044-20 BH-13 3.5
Collection Date: 10/28/2008
Matrix: SOIL

Analyses	Method Ref.	Result	Q	PQL	Units	DF	Analyst	Date
Volatiles by GC/MS (5035)								
1. 1,1,1-Trichloroethane	SW8260B	< 50		50	µg/Kg-dry	1	GCP	11/6/2008
2. 1,1,2,2-Tetrachloroethane	SW8260B	< 50		50	µg/Kg-dry	1	GCP	11/6/2008
3. 1,1,2-Trichloroethane	SW8260B	< 50		50	µg/Kg-dry	1	GCP	11/6/2008
4. 1,1-Dichloroethane	SW8260B	< 50		50	µg/Kg-dry	1	GCP	11/6/2008
5. 1,1-Dichloroethene	SW8260B	< 50		50	µg/Kg-dry	1	GCP	11/6/2008
6. 1,2,4-Trimethylbenzene	SW8260B	< 50		50	µg/Kg-dry	1	GCP	11/6/2008
7. 1,2-Dibromoethane	SW8260B	< 50		50	µg/Kg-dry	1	GCP	11/6/2008
8. 1,2-Dichlorobenzene	SW8260B	< 50		50	µg/Kg-dry	1	GCP	11/6/2008
9. 1,2-Dichloroethane	SW8260B	< 50		50	µg/Kg-dry	1	GCP	11/6/2008
10. 1,2-Dichloropropane	SW8260B	< 50		50	µg/Kg-dry	1	GCP	11/6/2008
11. 1,3,5-Trimethylbenzene	SW8260B	< 50		50	µg/Kg-dry	1	GCP	11/6/2008
12. 1,3-Dichlorobenzene	SW8260B	< 50		50	µg/Kg-dry	1	GCP	11/6/2008
13. 1,4-Dichlorobenzene	SW8260B	< 50		50	µg/Kg-dry	1	GCP	11/6/2008
14. Benzene	SW8260B	< 50		50	µg/Kg-dry	1	GCP	11/6/2008
15. Bromodichloromethane	SW8260B	< 50		50	µg/Kg-dry	1	GCP	11/6/2008
16. Bromoform	SW8260B	< 50		50	µg/Kg-dry	1	GCP	11/6/2008
17. Bromomethane	SW8260B	< 50		50	µg/Kg-dry	1	GCP	11/6/2008
18. Carbon tetrachloride	SW8260B	< 50		50	µg/Kg-dry	1	GCP	11/6/2008
19. Chlorobenzene	SW8260B	< 50		50	µg/Kg-dry	1	GCP	11/6/2008
20. Chloroethane	SW8260B	< 50		50	µg/Kg-dry	1	GCP	11/6/2008
21. Chloroform	SW8260B	< 50		50	µg/Kg-dry	1	GCP	11/6/2008
22. Chloromethane	SW8260B	< 50		50	µg/Kg-dry	1	GCP	11/6/2008
23. cis-1,2-Dichloroethene	SW8260B	< 50		50	µg/Kg-dry	1	GCP	11/6/2008
24. cis-1,3-Dichloropropene	SW8260B	< 50		50	µg/Kg-dry	1	GCP	11/6/2008
25. Dibromochloromethane	SW8260B	< 50		50	µg/Kg-dry	1	GCP	11/6/2008
26. Ethylbenzene	SW8260B	< 50		50	µg/Kg-dry	1	GCP	11/6/2008
27. m,p-Xylene	SW8260B	< 100		100	µg/Kg-dry	1	GCP	11/6/2008
28. Methyl tert-butyl ether	SW8260B	< 250		250	µg/Kg-dry	1	GCP	11/6/2008
29. Methylene chloride	SW8260B	< 100		100	µg/Kg-dry	1	GCP	11/6/2008
30. o-Xylene	SW8260B	< 50		50	µg/Kg-dry	1	GCP	11/6/2008
31. Tetrachloroethene	SW8260B	< 50		50	µg/Kg-dry	1	GCP	11/6/2008
32. Toluene	SW8260B	< 50		50	µg/Kg-dry	1	GCP	11/6/2008
33. trans-1,2-Dichloroethene	SW8260B	< 50		50	µg/Kg-dry	1	GCP	11/6/2008
34. trans-1,3-Dichloropropene	SW8260B	< 50		50	µg/Kg-dry	1	GCP	11/6/2008
35. Trichloroethene	SW8260B	< 50		50	µg/Kg-dry	1	GCP	11/6/2008
36. Trichlorofluoromethane	SW8260B	< 50		50	µg/Kg-dry	1	GCP	11/6/2008
37. Vinyl chloride	SW8260B	< 40		40	µg/Kg-dry	1	GCP	11/6/2008

Definitions: PQL - Practical Quantitation Limit
DF - Dilution Factor

Qualifiers (Q): J - Detected below PQL but above MDL: Estimated
S - Spike Recovery Outside Acceptance Limits
B - Analyte detected in associated Method Blank
N - See case narrative for explanation

This report shall not be reproduced except in full, without the written approval of BIO-CHEM Laboratories, Inc.

Note: The sample results reported are based on the sample aliquot(s) tested.

BIO-CHEM Laboratories, Inc.

Date: 11/7/2008

ANALYTICAL REPORT

CLIENT: DeLisle Associates Ltd.
Lab Order: 0810288
Project: Goodwill Industries
Lab Sample ID: 0810288-05A

Project Number: EN08-044
Client Sample ID: EN08-044-30 BH-16 3.5-4.0'
Collection Date: 10/28/2008
Matrix: SOIL

Analyses	Method Ref.	Result	Q	PQL	Units	DF	Analyst	Date
Volatiles by GC/MS (5035)								
1. 1,1,1-Trichloroethane	SW8260B	< 50		50	µg/Kg-dry	1	GCP	11/6/2008
2. 1,1,2,2-Tetrachloroethane	SW8260B	< 50		50	µg/Kg-dry	1	GCP	11/6/2008
3. 1,1,2-Trichloroethane	SW8260B	< 50		50	µg/Kg-dry	1	GCP	11/6/2008
4. 1,1-Dichloroethane	SW8260B	< 50		50	µg/Kg-dry	1	GCP	11/6/2008
5. 1,1-Dichloroethene	SW8260B	< 50		50	µg/Kg-dry	1	GCP	11/6/2008
6. 1,2,4-Trimethylbenzene	SW8260B	< 50		50	µg/Kg-dry	1	GCP	11/6/2008
7. 1,2-Dibromoethane	SW8260B	< 50		50	µg/Kg-dry	1	GCP	11/6/2008
8. 1,2-Dichlorobenzene	SW8260B	< 50		50	µg/Kg-dry	1	GCP	11/6/2008
9. 1,2-Dichloroethane	SW8260B	< 50		50	µg/Kg-dry	1	GCP	11/6/2008
10. 1,2-Dichloropropane	SW8260B	< 50		50	µg/Kg-dry	1	GCP	11/6/2008
11. 1,3,5-Trimethylbenzene	SW8260B	< 50		50	µg/Kg-dry	1	GCP	11/6/2008
12. 1,3-Dichlorobenzene	SW8260B	< 50		50	µg/Kg-dry	1	GCP	11/6/2008
13. 1,4-Dichlorobenzene	SW8260B	< 50		50	µg/Kg-dry	1	GCP	11/6/2008
14. Benzene	SW8260B	< 50		50	µg/Kg-dry	1	GCP	11/6/2008
15. Bromodichloromethane	SW8260B	< 50		50	µg/Kg-dry	1	GCP	11/6/2008
16. Bromoform	SW8260B	< 50		50	µg/Kg-dry	1	GCP	11/6/2008
17. Bromomethane	SW8260B	< 50		50	µg/Kg-dry	1	GCP	11/6/2008
18. Carbon tetrachloride	SW8260B	< 50		50	µg/Kg-dry	1	GCP	11/6/2008
19. Chlorobenzene	SW8260B	< 50		50	µg/Kg-dry	1	GCP	11/6/2008
20. Chloroethane	SW8260B	< 50		50	µg/Kg-dry	1	GCP	11/6/2008
21. Chloroform	SW8260B	< 50		50	µg/Kg-dry	1	GCP	11/6/2008
22. Chloromethane	SW8260B	< 50		50	µg/Kg-dry	1	GCP	11/6/2008
23. cis-1,2-Dichloroethene	SW8260B	< 50		50	µg/Kg-dry	1	GCP	11/6/2008
24. cis-1,3-Dichloropropene	SW8260B	< 50		50	µg/Kg-dry	1	GCP	11/6/2008
25. Dibromochloromethane	SW8260B	< 50		50	µg/Kg-dry	1	GCP	11/6/2008
26. Ethylbenzene	SW8260B	< 50		50	µg/Kg-dry	1	GCP	11/6/2008
27. m,p-Xylene	SW8260B	< 100		100	µg/Kg-dry	1	GCP	11/6/2008
28. Methyl tert-butyl ether	SW8260B	< 250		250	µg/Kg-dry	1	GCP	11/6/2008
29. Methylene chloride	SW8260B	< 100		100	µg/Kg-dry	1	GCP	11/6/2008
30. o-Xylene	SW8260B	< 50		50	µg/Kg-dry	1	GCP	11/6/2008
31. Tetrachloroethene	SW8260B	< 50		50	µg/Kg-dry	1	GCP	11/6/2008
32. Toluene	SW8260B	< 50		50	µg/Kg-dry	1	GCP	11/6/2008
33. trans-1,2-Dichloroethene	SW8260B	< 50		50	µg/Kg-dry	1	GCP	11/6/2008
34. trans-1,3-Dichloropropene	SW8260B	< 50		50	µg/Kg-dry	1	GCP	11/6/2008
35. Trichloroethene	SW8260B	< 50		50	µg/Kg-dry	1	GCP	11/6/2008
36. Trichlorofluoromethane	SW8260B	< 50		50	µg/Kg-dry	1	GCP	11/6/2008
37. Vinyl chloride	SW8260B	< 40		40	µg/Kg-dry	1	GCP	11/6/2008

Definitions: PQL - Practical Quantitation Limit
DF - Dilution Factor

Qualifiers (Q): J - Detected below PQL but above MDL: Estimated
S - Spike Recovery Outside Acceptance Limits
B - Analyte detected in associated Method Blank
N - See case narrative for explanation

This report shall not be reproduced except in full, without the written approval of BIO-CHEM Laboratories, Inc.

Note: The sample results reported are based on the sample aliquot(s) tested.

BIO-CHEM Laboratories, Inc.

Date: 11/7/2008

ANALYTICAL REPORT

CLIENT: DeLisle Associates Ltd.
Lab Order: 0810288
Project: Goodwill Industries
Lab Sample ID: 0810288-06A

Project Number: EN08-044
Client Sample ID: EN08-044-31 BH-17 4.5-5
Collection Date: 10/28/2008
Matrix: SOIL

Analyses	Method Ref.	Result	Q	PQL	Units	DF	Analyst	Date
Volatiles by GC/MS (5035).								
1. 1,1,1-Trichloroethane	SW8260B	< 50		50	µg/Kg-dry	1	GCP	11/6/2008
2. 1,1,2,2-Tetrachloroethane	SW8260B	< 50		50	µg/Kg-dry	1	GCP	11/6/2008
3. 1,1,2-Trichloroethane	SW8260B	< 50		50	µg/Kg-dry	1	GCP	11/6/2008
4. 1,1-Dichloroethane	SW8260B	< 50		50	µg/Kg-dry	1	GCP	11/6/2008
5. 1,1-Dichloroethene	SW8260B	< 50		50	µg/Kg-dry	1	GCP	11/6/2008
6. 1,2,4-Trimethylbenzene	SW8260B	< 50		50	µg/Kg-dry	1	GCP	11/6/2008
7. 1,2-Dibromoethane	SW8260B	< 50		50	µg/Kg-dry	1	GCP	11/6/2008
8. 1,2-Dichlorobenzene	SW8260B	< 50		50	µg/Kg-dry	1	GCP	11/6/2008
9. 1,2-Dichloroethane	SW8260B	< 50		50	µg/Kg-dry	1	GCP	11/6/2008
10. 1,2-Dichloropropane	SW8260B	< 50		50	µg/Kg-dry	1	GCP	11/6/2008
11. 1,3,5-Trimethylbenzene	SW8260B	< 50		50	µg/Kg-dry	1	GCP	11/6/2008
12. 1,3-Dichlorobenzene	SW8260B	< 50		50	µg/Kg-dry	1	GCP	11/6/2008
13. 1,4-Dichlorobenzene	SW8260B	< 50		50	µg/Kg-dry	1	GCP	11/6/2008
14. Benzene	SW8260B	< 50		50	µg/Kg-dry	1	GCP	11/6/2008
15. Bromodichloromethane	SW8260B	< 50		50	µg/Kg-dry	1	GCP	11/6/2008
16. Bromoform	SW8260B	< 50		50	µg/Kg-dry	1	GCP	11/6/2008
17. Bromomethane	SW8260B	< 50		50	µg/Kg-dry	1	GCP	11/6/2008
18. Carbon tetrachloride	SW8260B	< 50		50	µg/Kg-dry	1	GCP	11/6/2008
19. Chlorobenzene	SW8260B	< 50		50	µg/Kg-dry	1	GCP	11/6/2008
20. Chloroethane	SW8260B	< 50		50	µg/Kg-dry	1	GCP	11/6/2008
21. Chloroform	SW8260B	< 50		50	µg/Kg-dry	1	GCP	11/6/2008
22. Chloromethane	SW8260B	< 50		50	µg/Kg-dry	1	GCP	11/6/2008
23. cis-1,2-Dichloroethene	SW8260B	< 50		50	µg/Kg-dry	1	GCP	11/6/2008
24. cis-1,3-Dichloropropene	SW8260B	< 50		50	µg/Kg-dry	1	GCP	11/6/2008
25. Dibromochloromethane	SW8260B	< 50		50	µg/Kg-dry	1	GCP	11/6/2008
26. Ethylbenzene	SW8260B	< 50		50	µg/Kg-dry	1	GCP	11/6/2008
27. m,p-Xylene	SW8260B	< 100		100	µg/Kg-dry	1	GCP	11/6/2008
28. Methyl tert-butyl ether	SW8260B	< 250		250	µg/Kg-dry	1	GCP	11/6/2008
29. Methylene chloride	SW8260B	< 100		100	µg/Kg-dry	1	GCP	11/6/2008
30. o-Xylene	SW8260B	< 50		50	µg/Kg-dry	1	GCP	11/6/2008
31. Tetrachloroethene	SW8260B	160		50	µg/Kg-dry	1	GCP	11/6/2008
32. Toluene	SW8260B	< 50		50	µg/Kg-dry	1	GCP	11/6/2008
33. trans-1,2-Dichloroethene	SW8260B	< 50		50	µg/Kg-dry	1	GCP	11/6/2008
34. trans-1,3-Dichloropropene	SW8260B	< 50		50	µg/Kg-dry	1	GCP	11/6/2008
35. Trichloroethene	SW8260B	< 50		50	µg/Kg-dry	1	GCP	11/6/2008
36. Trichlorofluoromethane	SW8260B	< 50		50	µg/Kg-dry	1	GCP	11/6/2008
37. Vinyl chloride	SW8260B	< 40		40	µg/Kg-dry	1	GCP	11/6/2008

Definitions: PQL - Practical Quantitation Limit
DF - Dilution Factor

Qualifiers (Q): J - Detected below PQL but above MDL: Estimated
S - Spike Recovery Outside Acceptance Limits
B - Analyte detected in associated Method Blank
N - See case narrative for explanation

This report shall not be reproduced except in full, without the written approval of BIO-CHEM Laboratories, Inc.

Note: The sample results reported are based on the sample aliquot(s) tested.

BIO-CHEM Laboratories, Inc.

Date: 11/7/2008

ANALYTICAL REPORT

CLIENT: DeLisle Associates Ltd.
Lab Order: 0810288
Project: Goodwill Industries
Lab Sample ID: 0810288-07A

Project Number: EN08-044
Client Sample ID: EN08-044-21 BH-3 35-37
Collection Date: 10/28/2008
Matrix: AQUEOUS

Analyses	Method Ref.	Result	Q	PQL	Units	DF	Analyst	Date
Volatiles by GC/MS								
1. 1,1,1-Trichloroethane	SW8260B	< 1.0		1.0	µg/L	1	GCP	11/6/2008
2. 1,1,2,2-Tetrachloroethane	SW8260B	< 1.0		1.0	µg/L	1	GCP	11/6/2008
3. 1,1,2-Trichloroethane	SW8260B	< 1.0		1.0	µg/L	1	GCP	11/6/2008
4. 1,1-Dichloroethane	SW8260B	< 1.0		1.0	µg/L	1	GCP	11/6/2008
5. 1,1-Dichloroethene	SW8260B	< 1.0		1.0	µg/L	1	GCP	11/6/2008
6. 1,2,4-Trimethylbenzene	SW8260B	< 1.0		1.0	µg/L	1	GCP	11/6/2008
7. 1,2-Dibromoethane	SW8260B	< 1.0		1.0	µg/L	1	GCP	11/6/2008
8. 1,2-Dichlorobenzene	SW8260B	< 1.0		1.0	µg/L	1	GCP	11/6/2008
9. 1,2-Dichloroethane	SW8260B	< 1.0		1.0	µg/L	1	GCP	11/6/2008
10. 1,2-Dichloropropane	SW8260B	< 1.0		1.0	µg/L	1	GCP	11/6/2008
11. 1,3,5-Trimethylbenzene	SW8260B	< 1.0		1.0	µg/L	1	GCP	11/6/2008
12. 1,3-Dichlorobenzene	SW8260B	< 1.0		1.0	µg/L	1	GCP	11/6/2008
13. 1,4-Dichlorobenzene	SW8260B	< 1.0		1.0	µg/L	1	GCP	11/6/2008
14. Benzene	SW8260B	< 1.0		1.0	µg/L	1	GCP	11/6/2008
15. Bromodichloromethane	SW8260B	< 1.0		1.0	µg/L	1	GCP	11/6/2008
16. Bromoform	SW8260B	< 1.0		1.0	µg/L	1	GCP	11/6/2008
17. Bromomethane	SW8260B	< 1.0		1.0	µg/L	1	GCP	11/6/2008
18. Carbon tetrachloride	SW8260B	< 1.0		1.0	µg/L	1	GCP	11/6/2008
19. Chlorobenzene	SW8260B	< 1.0		1.0	µg/L	1	GCP	11/6/2008
20. Chloroethane	SW8260B	< 1.0		1.0	µg/L	1	GCP	11/6/2008
21. Chloroform	SW8260B	< 1.0		1.0	µg/L	1	GCP	11/6/2008
22. Chloromethane	SW8260B	< 1.0		1.0	µg/L	1	GCP	11/6/2008
23. cis-1,2-Dichloroethene	SW8260B	< 1.0		1.0	µg/L	1	GCP	11/6/2008
24. cis-1,3-Dichloropropene	SW8260B	< 1.0		1.0	µg/L	1	GCP	11/6/2008
25. Dibromochloromethane	SW8260B	< 1.0		1.0	µg/L	1	GCP	11/6/2008
26. Ethylbenzene	SW8260B	< 1.0		1.0	µg/L	1	GCP	11/6/2008
27. m,p-Xylene	SW8260B	< 2.0		2.0	µg/L	1	GCP	11/6/2008
28. Methyl tert-butyl ether	SW8260B	< 4.0		4.0	µg/L	1	GCP	11/6/2008
29. Methylene chloride	SW8260B	< 5.0		5.0	µg/L	1	GCP	11/6/2008
30. o-Xylene	SW8260B	< 1.0		1.0	µg/L	1	GCP	11/6/2008
31. Tetrachloroethene	SW8260B	< 1.0		1.0	µg/L	1	GCP	11/6/2008
32. Toluene	SW8260B	< 1.0		1.0	µg/L	1	GCP	11/6/2008
33. trans-1,2-Dichloroethene	SW8260B	< 1.0		1.0	µg/L	1	GCP	11/6/2008
34. trans-1,3-Dichloropropene	SW8260B	< 1.0		1.0	µg/L	1	GCP	11/6/2008
35. Trichloroethene	SW8260B	< 1.0		1.0	µg/L	1	GCP	11/6/2008
36. Trichlorofluoromethane	SW8260B	< 1.0		1.0	µg/L	1	GCP	11/6/2008
37. Vinyl chloride	SW8260B	2.0		1.0	µg/L	1	GCP	11/6/2008

Definitions: PQL - Practical Quantitation Limit
DF - Dilution Factor

Qualifiers (Q): J - Detected below PQL but above MDL: Estimated
S - Spike Recovery Outside Acceptance Limits
B - Analyte detected in associated Method Blank
N - See case narrative for explanation

This report shall not be reproduced except in full, without the written approval of BIO-CHEM Laboratories, Inc.

Note: The sample results reported are based on the sample aliquot(s) tested.

BIO-CHEM Laboratories, Inc.

Date: 11/7/2008

ANALYTICAL REPORT

CLIENT: DeLisle Associates Ltd.
Lab Order: 0810288
Project: Goodwill Industries
Lab Sample ID: 0810288-08A

Project Number: EN08-044
Client Sample ID: EN08-044-22 BH-3 15-20
Collection Date: 10/28/2008
Matrix: AQUEOUS

Analyses	Method Ref.	Result	Q	PQL	Units	DF	Analyst	Date
Volatiles by GC/MS								
1. 1,1,1-Trichloroethane	SW8260B	< 1.0		1.0	µg/L	1	GCP	11/6/2008
2. 1,1,2,2-Tetrachloroethane	SW8260B	< 1.0		1.0	µg/L	1	GCP	11/6/2008
3. 1,1,2-Trichloroethane	SW8260B	< 1.0		1.0	µg/L	1	GCP	11/6/2008
4. 1,1-Dichloroethane	SW8260B	< 1.0		1.0	µg/L	1	GCP	11/6/2008
5. 1,1-Dichloroethene	SW8260B	< 1.0		1.0	µg/L	1	GCP	11/6/2008
6. 1,2,4-Trimethylbenzene	SW8260B	< 1.0		1.0	µg/L	1	GCP	11/6/2008
7. 1,2-Dibromoethane	SW8260B	< 1.0		1.0	µg/L	1	GCP	11/6/2008
8. 1,2-Dichlorobenzene	SW8260B	< 1.0		1.0	µg/L	1	GCP	11/6/2008
9. 1,2-Dichloroethane	SW8260B	< 1.0		1.0	µg/L	1	GCP	11/6/2008
10. 1,2-Dichloropropane	SW8260B	< 1.0		1.0	µg/L	1	GCP	11/6/2008
11. 1,3,5-Trimethylbenzene	SW8260B	< 1.0		1.0	µg/L	1	GCP	11/6/2008
12. 1,3-Dichlorobenzene	SW8260B	< 1.0		1.0	µg/L	1	GCP	11/6/2008
13. 1,4-Dichlorobenzene	SW8260B	< 1.0		1.0	µg/L	1	GCP	11/6/2008
14. Benzene	SW8260B	< 1.0		1.0	µg/L	1	GCP	11/6/2008
15. Bromodichloromethane	SW8260B	< 1.0		1.0	µg/L	1	GCP	11/6/2008
16. Bromoform	SW8260B	< 1.0		1.0	µg/L	1	GCP	11/6/2008
17. Bromomethane	SW8260B	< 1.0		1.0	µg/L	1	GCP	11/6/2008
18. Carbon tetrachloride	SW8260B	< 1.0		1.0	µg/L	1	GCP	11/6/2008
19. Chlorobenzene	SW8260B	< 1.0		1.0	µg/L	1	GCP	11/6/2008
20. Chloroethane	SW8260B	< 1.0		1.0	µg/L	1	GCP	11/6/2008
21. Chloroform	SW8260B	< 1.0		1.0	µg/L	1	GCP	11/6/2008
22. Chloromethane	SW8260B	< 1.0		1.0	µg/L	1	GCP	11/6/2008
23. cis-1,2-Dichloroethene	SW8260B	< 1.0		1.0	µg/L	1	GCP	11/6/2008
24. cis-1,3-Dichloropropene	SW8260B	< 1.0		1.0	µg/L	1	GCP	11/6/2008
25. Dibromochloromethane	SW8260B	< 1.0		1.0	µg/L	1	GCP	11/6/2008
26. Ethylbenzene	SW8260B	< 1.0		1.0	µg/L	1	GCP	11/6/2008
27. m,p-Xylene	SW8260B	< 2.0		2.0	µg/L	1	GCP	11/6/2008
28. Methyl tert-butyl ether	SW8260B	< 4.0		4.0	µg/L	1	GCP	11/6/2008
29. Methylene chloride	SW8260B	< 5.0		5.0	µg/L	1	GCP	11/6/2008
30. o-Xylene	SW8260B	< 1.0		1.0	µg/L	1	GCP	11/6/2008
31. Tetrachloroethene	SW8260B	< 1.0		1.0	µg/L	1	GCP	11/6/2008
32. Toluene	SW8260B	< 1.0		1.0	µg/L	1	GCP	11/6/2008
33. trans-1,2-Dichloroethene	SW8260B	< 1.0		1.0	µg/L	1	GCP	11/6/2008
34. trans-1,3-Dichloropropene	SW8260B	< 1.0		1.0	µg/L	1	GCP	11/6/2008
35. Trichloroethene	SW8260B	< 1.0		1.0	µg/L	1	GCP	11/6/2008
36. Trichlorofluoromethane	SW8260B	< 1.0		1.0	µg/L	1	GCP	11/6/2008
37. Vinyl chloride	SW8260B	< 1.0		1.0	µg/L	1	GCP	11/6/2008

Definitions: PQL - Practical Quantitation Limit
DF - Dilution Factor

Qualifiers (Q): J - Detected below PQL but above MDL: Estimated
S - Spike Recovery Outside Acceptance Limits
B - Analyte detected in associated Method Blank
N - See case narrative for explanation

This report shall not be reproduced except in full, without the written approval of BIO-CHEM Laboratories, Inc.

Note: The sample results reported are based on the sample aliquot(s) tested.

BIO-CHEM Laboratories, Inc.

Date: 11/7/2008

ANALYTICAL REPORT

CLIENT: DeLisle Associates Ltd.
Lab Order: 0810288
Project: Goodwill Industries
Lab Sample ID: 0810288-09A

Project Number: EN08-044
Client Sample ID: EN08-044-23 BH-13 10-12
Collection Date: 10/28/2008
Matrix: AQUEOUS

Analyses	Method Ref.	Result	Q	PQL	Units	DF	Analyst	Date
Volatiles by GC/MS								
1. 1,1,1-Trichloroethane	SW8260B	< 1.0		1.0	µg/L	1	GCP	11/6/2008
2. 1,1,2,2-Tetrachloroethane	SW8260B	< 1.0		1.0	µg/L	1	GCP	11/6/2008
3. 1,1,2-Trichloroethane	SW8260B	< 1.0		1.0	µg/L	1	GCP	11/6/2008
4. 1,1-Dichloroethane	SW8260B	< 1.0		1.0	µg/L	1	GCP	11/6/2008
5. 1,1-Dichloroethene	SW8260B	< 1.0		1.0	µg/L	1	GCP	11/6/2008
6. 1,2,4-Trimethylbenzene	SW8260B	< 1.0		1.0	µg/L	1	GCP	11/6/2008
7. 1,2-Dibromoethane	SW8260B	< 1.0		1.0	µg/L	1	GCP	11/6/2008
8. 1,2-Dichlorobenzene	SW8260B	< 1.0		1.0	µg/L	1	GCP	11/6/2008
9. 1,2-Dichloroethane	SW8260B	< 1.0		1.0	µg/L	1	GCP	11/6/2008
10. 1,2-Dichloropropane	SW8260B	< 1.0		1.0	µg/L	1	GCP	11/6/2008
11. 1,3,5-Trimethylbenzene	SW8260B	< 1.0		1.0	µg/L	1	GCP	11/6/2008
12. 1,3-Dichlorobenzene	SW8260B	< 1.0		1.0	µg/L	1	GCP	11/6/2008
13. 1,4-Dichlorobenzene	SW8260B	< 1.0		1.0	µg/L	1	GCP	11/6/2008
14. Benzene	SW8260B	< 1.0		1.0	µg/L	1	GCP	11/6/2008
15. Bromodichloromethane	SW8260B	< 1.0		1.0	µg/L	1	GCP	11/6/2008
16. Bromoform	SW8260B	< 1.0		1.0	µg/L	1	GCP	11/6/2008
17. Bromomethane	SW8260B	< 1.0		1.0	µg/L	1	GCP	11/6/2008
18. Carbon tetrachloride	SW8260B	< 1.0		1.0	µg/L	1	GCP	11/6/2008
19. Chlorobenzene	SW8260B	< 1.0		1.0	µg/L	1	GCP	11/6/2008
20. Chloroethane	SW8260B	< 1.0		1.0	µg/L	1	GCP	11/6/2008
21. Chloroform	SW8260B	< 1.0		1.0	µg/L	1	GCP	11/6/2008
22. Chloromethane	SW8260B	< 1.0		1.0	µg/L	1	GCP	11/6/2008
23. cis-1,2-Dichloroethene	SW8260B	< 1.0		1.0	µg/L	1	GCP	11/6/2008
24. cis-1,3-Dichloropropene	SW8260B	< 1.0		1.0	µg/L	1	GCP	11/6/2008
25. Dibromochloromethane	SW8260B	< 1.0		1.0	µg/L	1	GCP	11/6/2008
26. Ethylbenzene	SW8260B	< 1.0		1.0	µg/L	1	GCP	11/6/2008
27. m,p-Xylene	SW8260B	< 2.0		2.0	µg/L	1	GCP	11/6/2008
28. Methyl tert-butyl ether	SW8260B	< 4.0		4.0	µg/L	1	GCP	11/6/2008
29. Methylene chloride	SW8260B	< 5.0		5.0	µg/L	1	GCP	11/6/2008
30. o-Xylene	SW8260B	< 1.0		1.0	µg/L	1	GCP	11/6/2008
31. Tetrachloroethene	SW8260B	19		1.0	µg/L	1	GCP	11/6/2008
32. Toluene	SW8260B	< 1.0		1.0	µg/L	1	GCP	11/6/2008
33. trans-1,2-Dichloroethene	SW8260B	< 1.0		1.0	µg/L	1	GCP	11/6/2008
34. trans-1,3-Dichloropropene	SW8260B	< 1.0		1.0	µg/L	1	GCP	11/6/2008
35. Trichloroethene	SW8260B	< 1.0		1.0	µg/L	1	GCP	11/6/2008
36. Trichlorofluoromethane	SW8260B	< 1.0		1.0	µg/L	1	GCP	11/6/2008
37. Vinyl chloride	SW8260B	< 1.0		1.0	µg/L	1	GCP	11/6/2008

Definitions: PQL - Practical Quantitation Limit
DF - Dilution Factor

Qualifiers (Q):
J - Detected below PQL but above MDL: Estimated
S - Spike Recovery Outside Acceptance Limits
B - Analyte detected in associated Method Blank
N - See case narrative for explanation

This report shall not be reproduced except in full, without the written approval of BIO-CHEM Laboratories, Inc.

Note: The sample results reported are based on the sample aliquot(s) tested.

BIO-CHEM Laboratories, Inc.

Date: 11/7/2008

ANALYTICAL REPORT

CLIENT: DeLisle Associates Ltd.
Lab Order: 0810288
Project: Goodwill Industries
Lab Sample ID: 0810288-10A

Project Number: EN08-044
Client Sample ID: EN08-044-24 BH-14 35-37
Collection Date: 10/28/2008
Matrix: AQUEOUS

Analyses	Method Ref.	Result	Q	PQL	Units	DF	Analyst	Date
Volatiles by GC/MS								
1. 1,1,1-Trichloroethane	SW8260B	< 1.0		1.0	µg/L	1	GCP	11/6/2008
2. 1,1,2,2-Tetrachloroethane	SW8260B	< 1.0		1.0	µg/L	1	GCP	11/6/2008
3. 1,1,2-Trichloroethane	SW8260B	< 1.0		1.0	µg/L	1	GCP	11/6/2008
4. 1,1-Dichloroethane	SW8260B	< 1.0		1.0	µg/L	1	GCP	11/6/2008
5. 1,1-Dichloroethene	SW8260B	< 1.0		1.0	µg/L	1	GCP	11/6/2008
6. 1,2,4-Trimethylbenzene	SW8260B	< 1.0		1.0	µg/L	1	GCP	11/6/2008
7. 1,2-Dibromoethane	SW8260B	< 1.0		1.0	µg/L	1	GCP	11/6/2008
8. 1,2-Dichlorobenzene	SW8260B	< 1.0		1.0	µg/L	1	GCP	11/6/2008
9. 1,2-Dichloroethane	SW8260B	< 1.0		1.0	µg/L	1	GCP	11/6/2008
10. 1,2-Dichloropropane	SW8260B	< 1.0		1.0	µg/L	1	GCP	11/6/2008
11. 1,3,5-Trimethylbenzene	SW8260B	< 1.0		1.0	µg/L	1	GCP	11/6/2008
12. 1,3-Dichlorobenzene	SW8260B	< 1.0		1.0	µg/L	1	GCP	11/6/2008
13. 1,4-Dichlorobenzene	SW8260B	< 1.0		1.0	µg/L	1	GCP	11/6/2008
14. Benzene	SW8260B	< 1.0		1.0	µg/L	1	GCP	11/6/2008
15. Bromodichloromethane	SW8260B	< 1.0		1.0	µg/L	1	GCP	11/6/2008
16. Bromoform	SW8260B	< 1.0		1.0	µg/L	1	GCP	11/6/2008
17. Bromomethane	SW8260B	< 1.0		1.0	µg/L	1	GCP	11/6/2008
18. Carbon tetrachloride	SW8260B	< 1.0		1.0	µg/L	1	GCP	11/6/2008
19. Chlorobenzene	SW8260B	< 1.0		1.0	µg/L	1	GCP	11/6/2008
20. Chloroethane	SW8260B	< 1.0		1.0	µg/L	1	GCP	11/6/2008
21. Chloroform	SW8260B	< 1.0		1.0	µg/L	1	GCP	11/6/2008
22. Chloromethane	SW8260B	< 1.0		1.0	µg/L	1	GCP	11/6/2008
23. cis-1,2-Dichloroethene	SW8260B	< 1.0		1.0	µg/L	1	GCP	11/6/2008
24. cis-1,3-Dichloropropene	SW8260B	< 1.0		1.0	µg/L	1	GCP	11/6/2008
25. Dibromochloromethane	SW8260B	< 1.0		1.0	µg/L	1	GCP	11/6/2008
26. Ethylbenzene	SW8260B	< 1.0		1.0	µg/L	1	GCP	11/6/2008
27. m,p-Xylene	SW8260B	< 2.0		2.0	µg/L	1	GCP	11/6/2008
28. Methyl tert-butyl ether	SW8260B	< 4.0		4.0	µg/L	1	GCP	11/6/2008
29. Methylene chloride	SW8260B	< 5.0		5.0	µg/L	1	GCP	11/6/2008
30. o-Xylene	SW8260B	< 1.0		1.0	µg/L	1	GCP	11/6/2008
31. Tetrachloroethene	SW8260B	< 1.0		1.0	µg/L	1	GCP	11/6/2008
32. Toluene	SW8260B	< 1.0		1.0	µg/L	1	GCP	11/6/2008
33. trans-1,2-Dichloroethene	SW8260B	< 1.0		1.0	µg/L	1	GCP	11/6/2008
34. trans-1,3-Dichloropropene	SW8260B	< 1.0		1.0	µg/L	1	GCP	11/6/2008
35. Trichloroethene	SW8260B	< 1.0		1.0	µg/L	1	GCP	11/6/2008
36. Trichlorofluoromethane	SW8260B	< 1.0		1.0	µg/L	1	GCP	11/6/2008
37. Vinyl chloride	SW8260B	3.0		1.0	µg/L	1	GCP	11/6/2008

Definitions: PQL - Practical Quantitation Limit
DF - Dilution Factor

Qualifiers (Q): J - Detected below PQL but above MDL: Estimated
S - Spike Recovery Outside Acceptance Limits
B - Analyte detected in associated Method Blank
N - See case narrative for explanation

This report shall not be reproduced except in full, without the written approval of BIO-CHEM Laboratories, Inc.

Note: The sample results reported are based on the sample aliquot(s) tested.

BIO-CHEM Laboratories, Inc.

Date: 11/7/2008

ANALYTICAL REPORT

CLIENT: DeLisle Associates Ltd.
Lab Order: 0810288
Project: Goodwill Industries
Lab Sample ID: 0810288-11A

Project Number: EN08-044
Client Sample ID: EN08-044-25 BH-14 19-21
Collection Date: 10/28/2008
Matrix: AQUEOUS

Analyses	Method Ref.	Result	Q	PQL	Units	DF	Analyst	Date
Volatiles by GC/MS								
1. 1,1,1-Trichloroethane	SW8260B	< 1.0		1.0	µg/L	1	GCP	11/6/2008
2. 1,1,2,2-Tetrachloroethane	SW8260B	< 1.0		1.0	µg/L	1	GCP	11/6/2008
3. 1,1,2-Trichloroethane	SW8260B	< 1.0		1.0	µg/L	1	GCP	11/6/2008
4. 1,1-Dichloroethane	SW8260B	< 1.0		1.0	µg/L	1	GCP	11/6/2008
5. 1,1-Dichloroethene	SW8260B	< 1.0		1.0	µg/L	1	GCP	11/6/2008
6. 1,2,4-Trimethylbenzene	SW8260B	< 1.0		1.0	µg/L	1	GCP	11/6/2008
7. 1,2-Dibromoethane	SW8260B	< 1.0		1.0	µg/L	1	GCP	11/6/2008
8. 1,2-Dichlorobenzene	SW8260B	< 1.0		1.0	µg/L	1	GCP	11/6/2008
9. 1,2-Dichloroethane	SW8260B	< 1.0		1.0	µg/L	1	GCP	11/6/2008
10. 1,2-Dichloropropane	SW8260B	< 1.0		1.0	µg/L	1	GCP	11/6/2008
11. 1,3,5-Trimethylbenzene	SW8260B	< 1.0		1.0	µg/L	1	GCP	11/6/2008
12. 1,3-Dichlorobenzene	SW8260B	< 1.0		1.0	µg/L	1	GCP	11/6/2008
13. 1,4-Dichlorobenzene	SW8260B	< 1.0		1.0	µg/L	1	GCP	11/6/2008
14. Benzene	SW8260B	< 1.0		1.0	µg/L	1	GCP	11/6/2008
15. Bromodichloromethane	SW8260B	< 1.0		1.0	µg/L	1	GCP	11/6/2008
16. Bromoform	SW8260B	< 1.0		1.0	µg/L	1	GCP	11/6/2008
17. Bromomethane	SW8260B	< 1.0		1.0	µg/L	1	GCP	11/6/2008
18. Carbon tetrachloride	SW8260B	< 1.0		1.0	µg/L	1	GCP	11/6/2008
19. Chlorobenzene	SW8260B	< 1.0		1.0	µg/L	1	GCP	11/6/2008
20. Chloroethane	SW8260B	< 1.0		1.0	µg/L	1	GCP	11/6/2008
21. Chloroform	SW8260B	< 1.0		1.0	µg/L	1	GCP	11/6/2008
22. Chloromethane	SW8260B	< 1.0		1.0	µg/L	1	GCP	11/6/2008
23. cis-1,2-Dichloroethene	SW8260B	1.6		1.0	µg/L	1	GCP	11/6/2008
24. cis-1,3-Dichloropropene	SW8260B	< 1.0		1.0	µg/L	1	GCP	11/6/2008
25. Dibromochloromethane	SW8260B	< 1.0		1.0	µg/L	1	GCP	11/6/2008
26. Ethylbenzene	SW8260B	< 1.0		1.0	µg/L	1	GCP	11/6/2008
27. m,p-Xylene	SW8260B	< 2.0		2.0	µg/L	1	GCP	11/6/2008
28. Methyl tert-butyl ether	SW8260B	< 4.0		4.0	µg/L	1	GCP	11/6/2008
29. Methylene chloride	SW8260B	< 5.0		5.0	µg/L	1	GCP	11/6/2008
30. o-Xylene	SW8260B	< 1.0		1.0	µg/L	1	GCP	11/6/2008
31. Tetrachloroethene	SW8260B	6.0		1.0	µg/L	1	GCP	11/6/2008
32. Toluene	SW8260B	< 1.0		1.0	µg/L	1	GCP	11/6/2008
33. trans-1,2-Dichloroethene	SW8260B	< 1.0		1.0	µg/L	1	GCP	11/6/2008
34. trans-1,3-Dichloropropene	SW8260B	< 1.0		1.0	µg/L	1	GCP	11/6/2008
35. Trichloroethene	SW8260B	1.5		1.0	µg/L	1	GCP	11/6/2008
36. Trichlorofluoromethane	SW8260B	< 1.0		1.0	µg/L	1	GCP	11/6/2008
37. Vinyl chloride	SW8260B	< 1.0		1.0	µg/L	1	GCP	11/6/2008

Definitions: PQL - Practical Quantitation Limit
DF - Dilution Factor

Qualifiers (Q): J - Detected below PQL but above MDL: Estimated
S - Spike Recovery Outside Acceptance Limits
B - Analyte detected in associated Method Blank
N - See case narrative for explanation

This report shall not be reproduced except in full, without the written approval of BIO-CHEM Laboratories, Inc.

Note: The sample results reported are based on the sample aliquot(s) tested.

BIO-CHEM Laboratories, Inc.

Date: 11/7/2008

ANALYTICAL REPORT

CLIENT:- DeLisle Associates Ltd.
Lab Order: 0810288
Project: Goodwill Industries
Lab Sample ID: 0810288-12A

Project Number: EN08-044
Client Sample ID: EN08-044-26 BH-14 10-12'
Collection Date: 10/28/2008
Matrix: AQUEOUS

Analyses	Method Ref.	Result	Q	PQL	Units	DF	Analyst	Date
Volatiles by GC/MS								
1. 1,1,1-Trichloroethane	SW8260B	< 1.0		1.0	µg/L	1	GCP	11/6/2008
2. 1,1,2,2-Tetrachloroethane	SW8260B	< 1.0		1.0	µg/L	1	GCP	11/6/2008
3. 1,1,2-Trichloroethane	SW8260B	< 1.0		1.0	µg/L	1	GCP	11/6/2008
4. 1,1-Dichloroethane	SW8260B	< 1.0		1.0	µg/L	1	GCP	11/6/2008
5. 1,1-Dichloroethene	SW8260B	< 1.0		1.0	µg/L	1	GCP	11/6/2008
6. 1,2,4-Trimethylbenzene	SW8260B	< 1.0		1.0	µg/L	1	GCP	11/6/2008
7. 1,2-Dibromoethane	SW8260B	< 1.0		1.0	µg/L	1	GCP	11/6/2008
8. 1,2-Dichlorobenzene	SW8260B	< 1.0		1.0	µg/L	1	GCP	11/6/2008
9. 1,2-Dichloroethane	SW8260B	< 1.0		1.0	µg/L	1	GCP	11/6/2008
10. 1,2-Dichloropropane	SW8260B	< 1.0		1.0	µg/L	1	GCP	11/6/2008
11. 1,3,5-Trimethylbenzene	SW8260B	< 1.0		1.0	µg/L	1	GCP	11/6/2008
12. 1,3-Dichlorobenzene	SW8260B	< 1.0		1.0	µg/L	1	GCP	11/6/2008
13. 1,4-Dichlorobenzene	SW8260B	< 1.0		1.0	µg/L	1	GCP	11/6/2008
14. Benzene	SW8260B	< 1.0		1.0	µg/L	1	GCP	11/6/2008
15. Bromodichloromethane	SW8260B	< 1.0		1.0	µg/L	1	GCP	11/6/2008
16. Bromoform	SW8260B	< 1.0		1.0	µg/L	1	GCP	11/6/2008
17. Bromomethane	SW8260B	< 1.0		1.0	µg/L	1	GCP	11/6/2008
18. Carbon tetrachloride	SW8260B	< 1.0		1.0	µg/L	1	GCP	11/6/2008
19. Chlorobenzene	SW8260B	< 1.0		1.0	µg/L	1	GCP	11/6/2008
20. Chloroethane	SW8260B	< 1.0		1.0	µg/L	1	GCP	11/6/2008
21. Chloroform	SW8260B	< 1.0		1.0	µg/L	1	GCP	11/6/2008
22. Chloromethane	SW8260B	< 1.0		1.0	µg/L	1	GCP	11/6/2008
23. cis-1,2-Dichloroethene	SW8260B	< 1.0		1.0	µg/L	1	GCP	11/6/2008
24. cis-1,3-Dichloropropene	SW8260B	< 1.0		1.0	µg/L	1	GCP	11/6/2008
25. Dibromochloromethane	SW8260B	< 1.0		1.0	µg/L	1	GCP	11/6/2008
26. Ethylbenzene	SW8260B	< 1.0		1.0	µg/L	1	GCP	11/6/2008
27. m,p-Xylene	SW8260B	< 2.0		2.0	µg/L	1	GCP	11/6/2008
28. Methyl tert-butyl ether	SW8260B	< 4.0		4.0	µg/L	1	GCP	11/6/2008
29. Methylene chloride	SW8260B	< 5.0		5.0	µg/L	1	GCP	11/6/2008
30. o-Xylene	SW8260B	< 1.0		1.0	µg/L	1	GCP	11/6/2008
31. Tetrachloroethene	SW8260B	24		1.0	µg/L	1	GCP	11/6/2008
32. Toluene	SW8260B	< 1.0		1.0	µg/L	1	GCP	11/6/2008
33. trans-1,2-Dichloroethene	SW8260B	< 1.0		1.0	µg/L	1	GCP	11/6/2008
34. trans-1,3-Dichloropropene	SW8260B	< 1.0		1.0	µg/L	1	GCP	11/6/2008
35. Trichloroethene	SW8260B	< 1.0		1.0	µg/L	1	GCP	11/6/2008
36 Trichlorofluoromethane	SW8260B	< 1.0		1.0	µg/L	1	GCP	11/6/2008
37. Vinyl chloride	SW8260B	< 1.0		1.0	µg/L	1	GCP	11/6/2008

Definitions: PQL - Practical Quantitation Limit
DF - Dilution Factor

Qualifiers (Q): J - Detected below PQL but above MDL: Estimated
S - Spike Recovery Outside Acceptance Limits
B - Analyte detected in associated Method Blank
N - See case narrative for explanation

This report shall not be reproduced except in full, without the written approval of BIO-CHEM Laboratories, Inc.

Note: The sample results reported are based on the sample aliquot(s) tested.

BIO-CHEM Laboratories, Inc.

Date: 11/7/2008

ANALYTICAL REPORT

CLIENT: DeLisle Associates Ltd.
Lab Order: 0810288
Project: Goodwill Industries
Lab Sample ID: 0810288-13A

Project Number: EN08-044
Client Sample ID: EN08-044-27 BH-15 35-37
Collection Date: 10/28/2008
Matrix: AQUEOUS

Analyses	Method Ref.	Result	Q	PQL	Units	DF	Analyst	Date
Volatiles by GC/MS								
1. 1,1,1-Trichloroethane	SW8260B	< 1.0		1.0	µg/L	1	GCP	11/6/2008
2. 1,1,2,2-Tetrachloroethane	SW8260B	< 1.0		1.0	µg/L	1	GCP	11/6/2008
3. 1,1,2-Trichloroethane	SW8260B	< 1.0		1.0	µg/L	1	GCP	11/6/2008
4. 1,1-Dichloroethane	SW8260B	< 1.0		1.0	µg/L	1	GCP	11/6/2008
5. 1,1-Dichloroethene	SW8260B	< 1.0		1.0	µg/L	1	GCP	11/6/2008
6. 1,2,4-Trimethylbenzene	SW8260B	< 1.0		1.0	µg/L	1	GCP	11/6/2008
7. 1,2-Dibromoethane	SW8260B	< 1.0		1.0	µg/L	1	GCP	11/6/2008
8. 1,2-Dichlorobenzene	SW8260B	< 1.0		1.0	µg/L	1	GCP	11/6/2008
9. 1,2-Dichloroethane	SW8260B	< 1.0		1.0	µg/L	1	GCP	11/6/2008
10. 1,2-Dichloropropane	SW8260B	< 1.0		1.0	µg/L	1	GCP	11/6/2008
11. 1,3,5-Trimethylbenzene	SW8260B	< 1.0		1.0	µg/L	1	GCP	11/6/2008
12. 1,3-Dichlorobenzene	SW8260B	< 1.0		1.0	µg/L	1	GCP	11/6/2008
13. 1,4-Dichlorobenzene	SW8260B	< 1.0		1.0	µg/L	1	GCP	11/6/2008
14. Benzene	SW8260B	< 1.0		1.0	µg/L	1	GCP	11/6/2008
15. Bromodichloromethane	SW8260B	< 1.0		1.0	µg/L	1	GCP	11/6/2008
16. Bromoform	SW8260B	< 1.0		1.0	µg/L	1	GCP	11/6/2008
17. Bromomethane	SW8260B	< 1.0		1.0	µg/L	1	GCP	11/6/2008
18. Carbon tetrachloride	SW8260B	< 1.0		1.0	µg/L	1	GCP	11/6/2008
19. Chlorobenzene	SW8260B	< 1.0		1.0	µg/L	1	GCP	11/6/2008
20. Chloroethane	SW8260B	< 1.0		1.0	µg/L	1	GCP	11/6/2008
21. Chloroform	SW8260B	< 1.0		1.0	µg/L	1	GCP	11/6/2008
22. Chloromethane	SW8260B	< 1.0		1.0	µg/L	1	GCP	11/6/2008
23. cis-1,2-Dichloroethene	SW8260B	2.4		1.0	µg/L	1	GCP	11/6/2008
24. cis-1,3-Dichloropropene	SW8260B	< 1.0		1.0	µg/L	1	GCP	11/6/2008
25. Dibromochloromethane	SW8260B	< 1.0		1.0	µg/L	1	GCP	11/6/2008
26. Ethylbenzene	SW8260B	< 1.0		1.0	µg/L	1	GCP	11/6/2008
27. m,p-Xylene	SW8260B	< 2.0		2.0	µg/L	1	GCP	11/6/2008
28. Methyl tert-butyl ether	SW8260B	< 4.0		4.0	µg/L	1	GCP	11/6/2008
29. Methylene chloride	SW8260B	< 5.0		5.0	µg/L	1	GCP	11/6/2008
30. o-Xylene	SW8260B	< 1.0		1.0	µg/L	1	GCP	11/6/2008
31. Tetrachloroethene	SW8260B	< 1.0		1.0	µg/L	1	GCP	11/6/2008
32. Toluene	SW8260B	< 1.0		1.0	µg/L	1	GCP	11/6/2008
33. trans-1,2-Dichloroethene	SW8260B	< 1.0		1.0	µg/L	1	GCP	11/6/2008
34. trans-1,3-Dichloropropene	SW8260B	< 1.0		1.0	µg/L	1	GCP	11/6/2008
35. Trichloroethene	SW8260B	2.3		1.0	µg/L	1	GCP	11/6/2008
36. Trichlorofluoromethane	SW8260B	< 1.0		1.0	µg/L	1	GCP	11/6/2008
37. Vinyl chloride	SW8260B	5.4		1.0	µg/L	1	GCP	11/6/2008

Definitions: PQL - Practical Quantitation Limit
DF - Dilution Factor

Qualifiers (Q): J - Detected below PQL but above MDL: Estimated
S - Spike Recovery Outside Acceptance Limits
B - Analyte detected in associated Method Blank
N - See case narrative for explanation

This report shall not be reproduced except in full, without the written approval of BIO-CHEM Laboratories, Inc.

Note: The sample results reported are based on the sample aliquot(s) tested.

BIO-CHEM Laboratories, Inc.

Date: 11/7/2008

ANALYTICAL REPORT

CLIENT: DeLisle Associates Ltd.
Lab Order: 0810288
Project: Goodwill Industries
Lab Sample ID: 0810288-14A

Project Number: EN08-044
Client Sample ID: EN08-044-28 BH-15 19-21'
Collection Date: 10/28/2008
Matrix: AQUEOUS MW-7

Analyses	Method Ref.	Result	Q	PQL	Units	DF	Analyst	Date
Volatiles by GC/MS								
1. 1,1,1-Trichloroethane	SW8260B	< 1.0		1.0	µg/L	1	GCP	11/6/2008
2. 1,1,2,2-Tetrachloroethane	SW8260B	< 1.0		1.0	µg/L	1	GCP	11/6/2008
3. 1,1,2-Trichloroethane	SW8260B	< 1.0		1.0	µg/L	1	GCP	11/6/2008
4. 1,1-Dichloroethane	SW8260B	< 1.0		1.0	µg/L	1	GCP	11/6/2008
5. 1,1-Dichloroethene	SW8260B	< 1.0		1.0	µg/L	1	GCP	11/6/2008
6. 1,2,4-Trimethylbenzene	SW8260B	< 1.0		1.0	µg/L	1	GCP	11/6/2008
7. 1,2-Dibromoethane	SW8260B	< 1.0		1.0	µg/L	1	GCP	11/6/2008
8. 1,2-Dichlorobenzene	SW8260B	< 1.0		1.0	µg/L	1	GCP	11/6/2008
9. 1,2-Dichloroethane	SW8260B	< 1.0		1.0	µg/L	1	GCP	11/6/2008
10. 1,2-Dichloropropane	SW8260B	< 1.0		1.0	µg/L	1	GCP	11/6/2008
11. 1,3,5-Trimethylbenzene	SW8260B	< 1.0		1.0	µg/L	1	GCP	11/6/2008
12. 1,3-Dichlorobenzene	SW8260B	< 1.0		1.0	µg/L	1	GCP	11/6/2008
13. 1,4-Dichlorobenzene	SW8260B	< 1.0		1.0	µg/L	1	GCP	11/6/2008
14. Benzene	SW8260B	< 1.0		1.0	µg/L	1	GCP	11/6/2008
15. Bromodichloromethane	SW8260B	< 1.0		1.0	µg/L	1	GCP	11/6/2008
16. Bromoform	SW8260B	< 1.0		1.0	µg/L	1	GCP	11/6/2008
17. Bromomethane	SW8260B	< 1.0		1.0	µg/L	1	GCP	11/6/2008
18. Carbon tetrachloride	SW8260B	< 1.0		1.0	µg/L	1	GCP	11/6/2008
19. Chlorobenzene	SW8260B	< 1.0		1.0	µg/L	1	GCP	11/6/2008
20. Chloroethane	SW8260B	< 1.0		1.0	µg/L	1	GCP	11/6/2008
21. Chloroform	SW8260B	< 1.0		1.0	µg/L	1	GCP	11/6/2008
22. Chloromethane	SW8260B	< 1.0		1.0	µg/L	1	GCP	11/6/2008
23. cis-1,2-Dichloroethene	SW8260B	19		1.0	µg/L	1	GCP	11/6/2008
24. cis-1,3-Dichloropropene	SW8260B	< 1.0		1.0	µg/L	1	GCP	11/6/2008
25. Dibromochloromethane	SW8260B	< 1.0		1.0	µg/L	1	GCP	11/6/2008
26. Ethylbenzene	SW8260B	< 1.0		1.0	µg/L	1	GCP	11/6/2008
27. m,p-Xylene	SW8260B	< 2.0		2.0	µg/L	1	GCP	11/6/2008
28. Methyl tert-butyl ether	SW8260B	< 4.0		4.0	µg/L	1	GCP	11/6/2008
29. Methylene chloride	SW8260B	< 5.0		5.0	µg/L	1	GCP	11/6/2008
30. o-Xylene	SW8260B	< 1.0		1.0	µg/L	1	GCP	11/6/2008
31. Tetrachloroethene	SW8260B	< 1.0		1.0	µg/L	1	GCP	11/6/2008
32. Toluene	SW8260B	< 1.0		1.0	µg/L	1	GCP	11/6/2008
33. trans-1,2-Dichloroethene	SW8260B	< 1.0		1.0	µg/L	1	GCP	11/6/2008
34. trans-1,3-Dichloropropene	SW8260B	< 1.0		1.0	µg/L	1	GCP	11/6/2008
35. Trichloroethene	SW8260B	< 1.0		1.0	µg/L	1	GCP	11/6/2008
36. Trichlorofluoromethane	SW8260B	< 1.0		1.0	µg/L	1	GCP	11/6/2008
37. Vinyl chloride	SW8260B	7.4		1.0	µg/L	1	GCP	11/6/2008

Definitions: PQL - Practical Quantitation Limit
DF - Dilution Factor

Qualifiers (Q): J - Detected below PQL but above MDL: Estimated
S - Spike Recovery Outside Acceptance Limits
B - Analyte detected in associated Method Blank
N - See case narrative for explanation

This report shall not be reproduced except in full, without the written approval of BIO-CHEM Laboratories, Inc.

Note: The sample results reported are based on the sample aliquot(s) tested.

BIO-CHEM Laboratories, Inc.

Date: *11/7/2008*

ANALYTICAL REPORT

CLIENT:	DeLisle Associates Ltd.	**Project Number:**	EN08-044
Lab Order:	0810288	**Client Sample ID:**	EN08-044-29 BH-15 10-12
Project:	Goodwill Industries	**Collection Date:**	10/28/2008
Lab Sample ID:	0810288-15A	**Matrix:**	AQUEOUS MW-7

Analyses	Method Ref.	Result	Q	PQL	Units	DF	Analyst	Date
Volatiles by GC/MS								
1. 1,1,1-Trichloroethane	SW8260B	< 1.0		1.0	µg/L	1	GCP	11/6/2008
2. 1,1,2,2-Tetrachloroethane	SW8260B	< 1.0		1.0	µg/L	1	GCP	11/6/2008
3. 1,1,2-Trichloroethane	SW8260B	< 1.0		1.0	µg/L	1	GCP	11/6/2008
4. 1,1-Dichloroethane	SW8260B	< 1.0		1.0	µg/L	1	GCP	11/6/2008
5. 1,1-Dichloroethene	SW8260B	< 1.0		1.0	µg/L	1	GCP	11/6/2008
6. 1,2,4-Trimethylbenzene	SW8260B	< 1.0		1.0	µg/L	1	GCP	11/6/2008
7. 1,2-Dibromoethane	SW8260B	< 1.0		1.0	µg/L	1	GCP	11/6/2008
8. 1,2-Dichlorobenzene	SW8260B	< 1.0		1.0	µg/L	1	GCP	11/6/2008
9. 1,2-Dichloroethane	SW8260B	< 1.0		1.0	µg/L	1	GCP	11/6/2008
10. 1,2-Dichloropropane	SW8260B	< 1.0		1.0	µg/L	1	GCP	11/6/2008
11. 1,3,5-Trimethylbenzene	SW8260B	< 1.0		1.0	µg/L	1	GCP	11/6/2008
12. 1,3-Dichlorobenzene	SW8260B	< 1.0		1.0	µg/L	1	GCP	11/6/2008
13. 1,4-Dichlorobenzene	SW8260B	< 1.0		1.0	µg/L	1	GCP	11/6/2008
14. Benzene	SW8260B	< 1.0		1.0	µg/L	1	GCP	11/6/2008
15. Bromodichloromethane	SW8260B	< 1.0		1.0	µg/L	1	GCP	11/6/2008
16. Bromoform	SW8260B	< 1.0		1.0	µg/L	1	GCP	11/6/2008
17. Bromomethane	SW8260B	< 1.0		1.0	µg/L	1	GCP	11/6/2008
18. Carbon tetrachloride	SW8260B	< 1.0		1.0	µg/L	1	GCP	11/6/2008
19. Chlorobenzene	SW8260B	< 1.0		1.0	µg/L	1	GCP	11/6/2008
20. Chloroethane	SW8260B	< 1.0		1.0	µg/L	1	GCP	11/6/2008
21. Chloroform	SW8260B	< 1.0		1.0	µg/L	1	GCP	11/6/2008
22. Chloromethane	SW8260B	< 1.0		1.0	µg/L	1	GCP	11/6/2008
23. cis-1,2-Dichloroethene	SW8260B	1.1		1.0	µg/L	1	GCP	11/6/2008
24. cis-1,3-Dichloropropene	SW8260B	< 1.0		1.0	µg/L	1	GCP	11/6/2008
25. Dibromochloromethane	SW8260B	< 1.0		1.0	µg/L	1	GCP	11/6/2008
26. Ethylbenzene	SW8260B	< 1.0		1.0	µg/L	1	GCP	11/6/2008
27. m,p-Xylene	SW8260B	< 2.0		2.0	µg/L	1	GCP	11/6/2008
28. Methyl tert-butyl ether	SW8260B	< 4.0		4.0	µg/L	1	GCP	11/6/2008
29. Methylene chloride	SW8260B	< 5.0		5.0	µg/L	1	GCP	11/6/2008
30. o-Xylene	SW8260B	< 1.0		1.0	µg/L	1	GCP	11/6/2008
31. Tetrachloroethene	SW8260B	32		1.0	µg/L	1	GCP	11/6/2008
32. Toluene	SW8260B	< 1.0		1.0	µg/L	1	GCP	11/6/2008
33. trans-1,2-Dichloroethene	SW8260B	< 1.0		1.0	µg/L	1	GCP	11/6/2008
34. trans-1,3-Dichloropropene	SW8260B	< 1.0		1.0	µg/L	1	GCP	11/6/2008
35. Trichloroethene	SW8260B	1.2		1.0	µg/L	1	GCP	11/6/2008
36. Trichlorofluoromethane	SW8260B	< 1.0		1.0	µg/L	1	GCP	11/6/2008
37. Vinyl chloride	SW8260B	1.3		1.0	µg/L	1	GCP	11/6/2008

Definitions: PQL - Practical Quantitation Limit
DF - Dilution Factor

Qualifiers (Q): J - Detected below PQL but above MDL: Estimated
S - Spike Recovery Outside Acceptance Limits
B - Analyte detected in associated Method Blank
N - See case narrative for explanation

This report shall not be reproduced except in full, without the written approval of BIO-CHEM Laboratories, Inc.

Note: The sample results reported are based on the sample aliquot(s) tested.

BIO-CHEM Laboratories, Inc.

Date: 11/7/2008

ANALYTICAL REPORT

CLIENT: DeLisle Associates Ltd.
Lab Order: 0810288
Project: Goodwill Industries
Lab Sample ID: 0810288-16A

Project Number: EN08-044
Client Sample ID: EN08-044-32 SH-18 35-37
Collection Date: 10/28/2008
Matrix: AQUEOUS

Analyses	Method Ref.	Result	Q	PQL	Units	DF	Analyst	Date
Volatiles by GC/MS								
1. 1,1,1-Trichloroethane	SW8260B	< 1.0		1.0	µg/L	1	GCP	11/6/2008
2. 1,1,2,2-Tetrachloroethane	SW8260B	< 1.0		1.0	µg/L	1	GCP	11/6/2008
3. 1,1,2-Trichloroethane	SW8260B	< 1.0		1.0	µg/L	1	GCP	11/6/2008
4. 1,1-Dichloroethane	SW8260B	< 1.0		1.0	µg/L	1	GCP	11/6/2008
5. 1,1-Dichloroethene	SW8260B	< 1.0		1.0	µg/L	1	GCP	11/6/2008
6. 1,2,4-Trimethylbenzene	SW8260B	< 1.0		1.0	µg/L	1	GCP	11/6/2008
7. 1,2-Dibromoethane	SW8260B	< 1.0		1.0	µg/L	1	GCP	11/6/2008
8. 1,2-Dichlorobenzene	SW8260B	< 1.0		1.0	µg/L	1	GCP	11/6/2008
9. 1,2-Dichloroethane	SW8260B	< 1.0		1.0	µg/L	1	GCP	11/6/2008
10. 1,2-Dichloropropane	SW8260B	< 1.0		1.0	µg/L	1	GCP	11/6/2008
11. 1,3,5-Trimethylbenzene	SW8260B	< 1.0		1.0	µg/L	1	GCP	11/6/2008
12. 1,3-Dichlorobenzene	SW8260B	< 1.0		1.0	µg/L	1	GCP	11/6/2008
13. 1,4-Dichlorobenzene	SW8260B	< 1.0		1.0	µg/L	1	GCP	11/6/2008
14. Benzene	SW8260B	< 1.0		1.0	µg/L	1	GCP	11/6/2008
15. Bromodichloromethane	SW8260B	< 1.0		1.0	µg/L	1	GCP	11/6/2008
16. Bromoform	SW8260B	< 1.0		1.0	µg/L	1	GCP	11/6/2008
17. Bromomethane	SW8260B	< 1.0		1.0	µg/L	1	GCP	11/6/2008
18. Carbon tetrachloride	SW8260B	< 1.0		1.0	µg/L	1	GCP	11/6/2008
19. Chlorobenzene	SW8260B	< 1.0		1.0	µg/L	1	GCP	11/6/2008
20. Chloroethane	SW8260B	< 1.0		1.0	µg/L	1	GCP	11/6/2008
21. Chloroform	SW8260B	< 1.0		1.0	µg/L	1	GCP	11/6/2008
22. Chloromethane	SW8260B	< 1.0		1.0	µg/L	1	GCP	11/6/2008
23. cis-1,2-Dichloroethene	SW8260B	2.3		1.0	µg/L	1	GCP	11/6/2008
24. cis-1,3-Dichloropropene	SW8260B	< 1.0		1.0	µg/L	1	GCP	11/6/2008
25. Dibromochloromethane	SW8260B	< 1.0		1.0	µg/L	1	GCP	11/6/2008
26. Ethylbenzene	SW8260B	< 1.0		1.0	µg/L	1	GCP	11/6/2008
27. m,p-Xylene	SW8260B	< 2.0		2.0	µg/L	1	GCP	11/6/2008
28. Methyl tert-butyl ether	SW8260B	< 4.0		4.0	µg/L	1	GCP	11/6/2008
29. Methylene chloride	SW8260B	< 5.0		5.0	µg/L	1	GCP	11/6/2008
30. o-Xylene	SW8260B	< 1.0		1.0	µg/L	1	GCP	11/6/2008
31. Tetrachloroethene	SW8260B	< 1.0		1.0	µg/L	1	GCP	11/6/2008
32. Toluene	SW8260B	< 1.0		1.0	µg/L	1	GCP	11/6/2008
33. trans-1,2-Dichloroethene	SW8260B	< 1.0		1.0	µg/L	1	GCP	11/6/2008
34. trans-1,3-Dichloropropene	SW8260B	< 1.0		1.0	µg/L	1	GCP	11/6/2008
35. Trichloroethene	SW8260B	< 1.0		1.0	µg/L	1	GCP	11/6/2008
36. Trichlorofluoromethane	SW8260B	< 1.0		1.0	µg/L	1	GCP	11/6/2008
37. Vinyl chloride	SW8260B	6.1		1.0	µg/L	1	GCP	11/6/2008

Definitions: PQL - Practical Quantitation Limit
DF - Dilution Factor

Qualifiers (Q): J - Detected below PQL but above MDL: Estimated
S - Spike Recovery Outside Acceptance Limits
B - Analyte detected in associated Method Blank
N - See case narrative for explanation

This report shall not be reproduced except in full, without the written approval of BIO-CHEM Laboratories, Inc.

Note: The sample results reported are based on the sample aliquot(s) tested.

BIO-CHEM Laboratories, Inc.

Date: 11/7/2008

ANALYTICAL REPORT

CLIENT: DeLisle Associates Ltd.
Lab Order: 0810288
Project: Goodwill Industries
Lab Sample ID: 0810288-17A

Project Number: EN08-044
Client Sample ID: EN08-044-33 8H-18 19-21
Collection Date: 10/28/2008
Matrix: AQUEOUS

Analyses	Method Ref.	Result	Q	PQL	Units	DF	Analyst	Date
Volatiles by GC/MS								
1. 1,1,1-Trichloroethane	SW8260B	< 1.0		1.0	µg/L	1	GCP	11/7/2008
2. 1,1,2,2-Tetrachloroethane	SW8260B	< 1.0		1.0	µg/L	1	GCP	11/7/2008
3. 1,1,2-Trichloroethane	SW8260B	< 1.0		1.0	µg/L	1	GCP	11/7/2008
4. 1,1-Dichloroethane	SW8260B	< 1.0		1.0	µg/L	1	GCP	11/7/2008
5. 1,1-Dichloroethene	SW8260B	< 1.0		1.0	µg/L	1	GCP	11/7/2008
6. 1,2,4-Trimethylbenzene	SW8260B	< 1.0		1.0	µg/L	1	GCP	11/7/2008
7. 1,2-Dibromoethane	SW8260B	< 1.0		1.0	µg/L	1	GCP	11/7/2008
8. 1,2-Dichlorobenzene	SW8260B	< 1.0		1.0	µg/L	1	GCP	11/7/2008
9. 1,2-Dichloroethane	SW8260B	< 1.0		1.0	µg/L	1	GCP	11/7/2008
10. 1,2-Dichloropropane	SW8260B	< 1.0		1.0	µg/L	1	GCP	11/7/2008
11. 1,3,5-Trimethylbenzene	SW8260B	< 1.0		1.0	µg/L	1	GCP	11/7/2008
12. 1,3-Dichlorobenzene	SW8260B	< 1.0		1.0	µg/L	1	GCP	11/7/2008
13. 1,4-Dichlorobenzene	SW8260B	< 1.0		1.0	µg/L	1	GCP	11/7/2008
14. Benzene	SW8260B	< 1.0		1.0	µg/L	1	GCP	11/7/2008
15. Bromodichloromethane	SW8260B	< 1.0		1.0	µg/L	1	GCP	11/7/2008
16. Bromoform	SW8260B	< 1.0		1.0	µg/L	1	GCP	11/7/2008
17. Bromomethane	SW8260B	< 1.0		1.0	µg/L	1	GCP	11/7/2008
18. Carbon tetrachloride	SW8260B	< 1.0		1.0	µg/L	1	GCP	11/7/2008
19. Chlorobenzene	SW8260B	< 1.0		1.0	µg/L	1	GCP	11/7/2008
20. Chloroethane	SW8260B	< 1.0		1.0	µg/L	1	GCP	11/7/2008
21. Chloroform	SW8260B	< 1.0		1.0	µg/L	1	GCP	11/7/2008
22. Chloromethane	SW8260B	< 1.0		1.0	µg/L	1	GCP	11/7/2008
23. cis-1,2-Dichloroethene	SW8260B	< 1.0		1.0	µg/L	1	GCP	11/7/2008
24. cis-1,3-Dichloropropene	SW8260B	< 1.0		1.0	µg/L	1	GCP	11/7/2008
25. Dibromochloromethane	SW8260B	< 1.0		1.0	µg/L	1	GCP	11/7/2008
26. Ethylbenzene	SW8260B	< 1.0		1.0	µg/L	1	GCP	11/7/2008
27. m,p-Xylene	SW8260B	< 2.0		2.0	µg/L	1	GCP	11/7/2008
28. Methyl tert-butyl ether	SW8260B	< 4.0		4.0	µg/L	1	GCP	11/7/2008
29. Methylene chloride	SW8260B	< 5.0		5.0	µg/L	1	GCP	11/7/2008
30. o-Xylene	SW8260B	< 1.0		1.0	µg/L	1	GCP	11/7/2008
31. Tetrachloroethene	SW8260B	< 1.0		1.0	µg/L	1	GCP	11/7/2008
32. Toluene	SW8260B	< 1.0		1.0	µg/L	1	GCP	11/7/2008
33. trans-1,2-Dichloroethene	SW8260B	< 1.0		1.0	µg/L	1	GCP	11/7/2008
34. trans-1,3-Dichloropropene	SW8260B	< 1.0		1.0	µg/L	1	GCP	11/7/2008
35. Trichloroethene	SW8260B	< 1.0		1.0	µg/L	1	GCP	11/7/2008
36. Trichlorofluoromethane	SW8260B	< 1.0		1.0	µg/L	1	GCP	11/7/2008
37. Vinyl chloride	SW8260B	9.4		1.0	µg/L	1	GCP	11/7/2008

Definitions: PQL - Practical Quantitation Limit
DF - Dilution Factor

Qualifiers (Q): J - Detected below PQL but above MDL: Estimated
S - Spike Recovery Outside Acceptance Limits
B - Analyte detected in associated Method Blank
N - See case narrative for explanation

This report shall not be reproduced except in full, without the written approval of BIO-CHEM Laboratories, Inc.

Note: The sample results reported are based on the sample aliquot(s) tested.

BIO-CHEM Laboratories, Inc.

Date: *11/7/2008*

ANALYTICAL REPORT

CLIENT: DeLisle Associates Ltd.
Lab Order: 0810288
Project: Goodwill Industries
Lab Sample ID: 0810288-18A

Project Number: EN08-044
Client Sample ID: EN08-044-34 BH-18 10-12
Collection Date: 10/28/2008
Matrix: AQUEOUS

Analyses	Method Ref.	Result	Q	PQL	Units	DF	Analyst	Date
Volatiles by GC/MS								
1. 1,1,1-Trichloroethane	SW8260B	< 1.0		1.0	µg/L	1	GCP	11/7/2008
2. 1,1,2,2-Tetrachloroethane	SW8260B	< 1.0		1.0	µg/L	1	GCP	11/7/2008
3. 1,1,2-Trichloroethane	SW8260B	< 1.0		1.0	µg/L	1	GCP	11/7/2008
4. 1,1-Dichloroethane	SW8260B	< 1.0		1.0	µg/L	1	GCP	11/7/2008
5. 1,1-Dichloroethene	SW8260B	< 1.0		1.0	µg/L	1	GCP	11/7/2008
6. 1,2,4-Trimethylbenzene	SW8260B	< 1.0		1.0	µg/L	1	GCP	11/7/2008
7. 1,2-Dibromoethane	SW8260B	< 1.0		1.0	µg/L	1	GCP	11/7/2008
8. 1,2-Dichlorobenzene	SW8260B	< 1.0		1.0	µg/L	1	GCP	11/7/2008
9. 1,2-Dichloroethane	SW8260B	< 1.0		1.0	µg/L	1	GCP	11/7/2008
10. 1,2-Dichloropropane	SW8260B	< 1.0		1.0	µg/L	1	GCP	11/7/2008
11. 1,3,5-Trimethylbenzene	SW8260B	< 1.0		1.0	µg/L	1	GCP	11/7/2008
12. 1,3-Dichlorobenzene	SW8260B	< 1.0		1.0	µg/L	1	GCP	11/7/2008
13. 1,4-Dichlorobenzene	SW8260B	< 1.0		1.0	µg/L	1	GCP	11/7/2008
14. Benzene	SW8260B	< 1.0		1.0	µg/L	1	GCP	11/7/2008
15. Bromodichloromethane	SW8260B	< 1.0		1.0	µg/L	1	GCP	11/7/2008
16. Bromoform	SW8260B	< 1.0		1.0	µg/L	1	GCP	11/7/2008
17. Bromomethane	SW8260B	< 1.0		1.0	µg/L	1	GCP	11/7/2008
18. Carbon tetrachloride	SW8260B	< 1.0		1.0	µg/L	1	GCP	11/7/2008
19. Chlorobenzene	SW8260B	< 1.0		1.0	µg/L	1	GCP	11/7/2008
20. Chloroethane	SW8260B	< 1.0		1.0	µg/L	1	GCP	11/7/2008
21. Chloroform	SW8260B	< 1.0		1.0	µg/L	1	GCP	11/7/2008
22. Chloromethane	SW8260B	< 1.0		1.0	µg/L	1	GCP	11/7/2008
23. cis-1,2-Dichloroethene	SW8260B	15		1.0	µg/L	1	GCP	11/7/2008
24. cis-1,3-Dichloropropene	SW8260B	< 1.0		1.0	µg/L	1	GCP	11/7/2008
25. Dibromochloromethane	SW8260B	< 1.0		1.0	µg/L	1	GCP	11/7/2008
26. Ethylbenzene	SW8260B	< 1.0		1.0	µg/L	1	GCP	11/7/2008
27. m,p-Xylene	SW8260B	< 2.0		2.0	µg/L	1	GCP	11/7/2008
28. Methyl tert-butyl ether	SW8260B	< 4.0		4.0	µg/L	1	GCP	11/7/2008
29. Methylene chloride	SW8260B	< 5.0		5.0	µg/L	1	GCP	11/7/2008
30. o-Xylene	SW8260B	< 1.0		1.0	µg/L	1	GCP	11/7/2008
31. Tetrachloroethene	SW8260B	30		1.0	µg/L	1	GCP	11/7/2008
32. Toluene	SW8260B	< 1.0		1.0	µg/L	1	GCP	11/7/2008
33. trans-1,2-Dichloroethene	SW8260B	< 1.0		1.0	µg/L	1	GCP	11/7/2008
34. trans-1,3-Dichloropropene	SW8260B	< 1.0		1.0	µg/L	1	GCP	11/7/2008
35. Trichloroethene	SW8260B	< 1.0		1.0	µg/L	1	GCP	11/7/2008
36. Trichlorofluoromethane	SW8260B	< 1.0		1.0	µg/L	1	GCP	11/7/2008
37. Vinyl chloride	SW8260B	2.0		1.0	µg/L	1	GCP	11/7/2008

Definitions: PQL - Practical Quantitation Limit
DF - Dilution Factor

Qualifiers (Q): J - Detected below PQL but above MDL. Estimated
S - Spike Recovery Outside Acceptance Limits
B - Analyte detected in associated Method Blank
N - See case narrative for explanation

This report shall not be reproduced except in full, without the written approval of BIO-CHEM Laboratories, Inc.

Note: The sample results reported are based on the sample aliquot(s) tested.

BIO-CHEM Laboratories, Inc.

11/7/2008

Lab Order: 0810288
Client: DeLisle Associates Ltd.
Project: Goodwill Industries

ANALYTICAL DETAIL REPORT

Sample ID	Client Sample ID	Matrix	Test Name	Date Sampled	TCLP/SPLP Date	Prep Date	QC Batch	Analysis Date	Analytical Batch
0810288-01A	EN08-044-17	Soil	Volatiles by GC/MS (5035)	10/28/2008		11/3/2008	27304	11/4/2008	GCMS_Q_081103B
0810288-02A	EN08-044-18	Soil	Volatiles by GC/MS (5035)	10/28/2008		11/3/2008	27304	11/4/2008	GCMS_Q_081103B
0810288-03A	EN08-044-19	Soil	Volatiles by GC/MS (5035)	10/28/2008		11/3/2008	27322	11/6/2008	GCMS_Q_081106B
0810288-04A	EN08-044-20	Soil	Volatiles by GC/MS (5035)	10/28/2008		11/3/2008	27322	11/6/2008	GCMS_Q_081106B
0810288-05A	EN08-044-30	Soil	Volatiles by GC/MS (5035)	10/28/2008		11/3/2008	27322	11/6/2008	GCMS_Q_081106B
0810288-06A	EN08-044-31	Soil	Volatiles by GC/MS (5035)	10/28/2008		11/3/2008	27322	11/6/2008	GCMS_Q_081106B
0810288-07A	EN08-044-21	Aqueous	Volatiles by GC/MS	10/28/2008			R59103	11/6/2008	GCMS_Y_081106A
0810288-08A	EN08-044-22	Aqueous	Volatiles by GC/MS	10/28/2008			R59095	11/6/2008	GCMS_Z_081106A
0810288-09A	EN08-044-23	Aqueous	Volatiles by GC/MS	10/28/2008			R59103	11/6/2008	GCMS_Y_081106A
0810288-10A	EN08-044-24	Aqueous	Volatiles by GC/MS	10/28/2008			R59103	11/6/2008	GCMS_Y_081106A
0810288-11A	EN08-044-25	Aqueous	Volatiles by GC/MS	10/28/2008			R59103	11/6/2008	GCMS_Y_081106A
0810288-12A	EN08-044-26	Aqueous	Volatiles by GC/MS	10/28/2008			R59103	11/6/2008	GCMS_Y_081106A
0810288-13A	EN08-044-27	Aqueous	Volatiles by GC/MS	10/28/2008			R59103	11/6/2008	GCMS_Y_081106A
0810288-14A	EN08-044-28	Aqueous	Volatiles by GC/MS	10/28/2008			R59103	11/6/2008	GCMS_Y_081106A
0810288-15A	EN08-044-29	Aqueous	Volatiles by GC/MS	10/28/2008			R59103	11/6/2008	GCMS_Y_081106A
0810288-16A	EN08-044-32	Aqueous	Volatiles by GC/MS	10/28/2008			R59103	11/6/2008	GCMS_Y_081106A
0810288-17A	EN08-044-33	Aqueous	Volatiles by GC/MS	10/28/2008			R59105	11/7/2008	GCMS_Y_081106B
0810288-18A	EN08-044-34	Aqueous	Volatiles by GC/MS	10/28/2008			R59105	11/7/2008	GCMS_Y_081106B

BIO-CHEM
ENVIRONMENTAL
ANALYTICAL
LABORATORIES

1049 - 28th Street SE
Grand Rapids, MI 49508
Ph: 616/248-4900
Toll Free: 800/362-LABS
Fax: 616/248-4904

November 17, 2008

Andy Graham
DeLisle Associates Ltd.
5050 Sprinkle Rd.
Portage, MI 49002

TEL: (269) 373-4500
FAX (616) 373-1044

RE: Goodwill Industries

Dear Andy Graham: Order No.: 0811078

BIO-CHEM Laboratories, Inc. received 4 samples on 11/12/2008 for the analyses presented in the following report.

There were no problems with the analyses and all data for associated QC met EPA or laboratory specifications except where noted in the Case Narrative.

If you have any questions regarding these tests results, please feel free to call.

Please note that unless otherwise instructed, residual samples will be held for sixty (60) days from the original report date. At that time, all non-hazardous samples will be disposed of in accordance with federal, state and local regulations and ordinances, and hazardous samples shall be returned to you. Please contact the laboratory within thirty (30) days if other arrangements for sample retention need to be made.

Sincerely,

Cindy Euwema

Cindy Euwema
Office Manager

Working with you to ensure a better tomorrow.

Bic Chem LABORATORIES, INC.

Chain of Custody

1049 28th Street SE • Grand Rapids, MI 49508
Ph: (616) 248-4900 • Toll Free: 800-362-LABS
Fax: (616) 248-4904

P.O.# 08-328

Project Number: EU08-044

Firm Name: DeLisle Associates LTD

Turn around time: STD

Date: 11/10/08

Date Due:

Firm Address: 5050 Sprinkle Rd

Project Name: Goodwill Industries

City, State, Zip: Portage MI 49002

State Samples Taken From:

Phone: 269 373-4500

Fax: 269 373-1041

Contact Person: Andy Graham

Item No	Lab I.D.	Client Sample Number	Date Taken	Time Taken	Sample Description (sample type: water, soil, other)	Number of Containers	Analysis Desired (One per line): VOCs								Remarks
1		EU08-044-35	11/10/08	1020	Groundwater	2	X								
2		EU08-044-36	↓	1220	↓	2	X								
3		EU08-044-37	↓	1327	↓	2	X								
4		EU08-044-38	↓	1350	↓	2	X								
5															
6															
7															
8															
9															
10															

Released by	Received by	Date	Time
A J Graham	[signature]	11-12-08	12:20

Laboratory use only

☐ Blue Ice _____°

☑ Regular Ice

☐ No Coolant

FRANKLIN PRESS 45267 2 08

BIO-CHEM Laboratories, Inc.

Date: *17-Nov-08*

CLIENT: DeLisle Associates Ltd.
Project: Goodwill Industries
Lab Order: 0811078

Work Order Sample Summary

Lab Sample ID	Client Sample ID	Matrix	Collection Date	Date Received
0811078-01A	EN-08-044-35	Aqueous	11/10/2008	11/12/2008
0811078-02A	EN-08-044-36	Aqueous	11/10/2008	11/12/2008
0811078-03A	EN-08-044-37	Aqueous	11/10/2008	11/12/2008
0811078-04A	EN-08-044-38	Aqueous	11/10/2008	11/12/2008

BIO-CHEM Laboratories, Inc. Date: *17-Nov-08*

CLIENT: DeLisle Associates Ltd.
Project: Goodwill Industries
Lab Order: 0811078

CASE NARRATIVE

Samples are routinely analyzed using methods outlined in the following references:

(SW) Test Methods for Evaluating Solid Waste, Physical/Chemical Methods, SW846, 3rd Ed.
(E) Methods for Chemical Analysis of Water and Wastes, EPA-600/4-79-020.
(A) Standard Methods for the Examination of Water and Wastewater, APHA, 18th Ed.
(D) Annual Book of ASTM Standards.

Specific methods utilized for this project are provided in the analytical report and are identified by the reference document abbreviation ( ) followed by the method number.

All QA/QC and sample analyses met method, laboratory and/or regulatory data quality objectives unless otherwise specified below.

No data qualifications required.

BIO-CHEM Laboratories, Inc.

Date: *11/17/2008*

ANALYTICAL REPORT

CLIENT:	DeLisle Associates Ltd.	**Project Number:**	EN08-044
Lab Order:	0811078	**Client Sample ID:**	EN-08-044-35
Project:	Goodwill Industries	**Collection Date:**	11/10/2008
Lab Sample ID:	0811078-01A	**Matrix:**	AQUEOUS

Analyses	Method Ref.	Result	Q	PQL	Units	DF	Analyst	Date
Volatiles by GC/MS								
1. 1,1,1-Trichloroethane	SW8260B	< 1.0		1.0	µg/L	1	GCP	11/13/2008
2. 1,1,2,2-Tetrachloroethane	SW8260B	< 1.0		1.0	µg/L	1	GCP	11/13/2008
3. 1,1,2-Trichloroethane	SW8260B	< 1.0		1.0	µg/L	1	GCP	11/13/2008
4. 1,1-Dichloroethane	SW8260B	< 1.0		1.0	µg/L	1	GCP	11/13/2008
5. 1,1-Dichloroethene	SW8260B	< 1.0		1.0	µg/L	1	GCP	11/13/2008
6. 1,2,4-Trimethylbenzene	SW8260B	< 1.0		1.0	µg/L	1	GCP	11/13/2008
7. 1,2-Dibromoethane	SW8260B	< 1.0		1.0	µg/L	1	GCP	11/13/2008
8. 1,2-Dichlorobenzene	SW8260B	< 1.0		1.0	µg/L	1	GCP	11/13/2008
9. 1,2-Dichloroethane	SW8260B	< 1.0		1.0	µg/L	1	GCP	11/13/2008
10. 1,2-Dichloropropane	SW8260B	< 1.0		1.0	µg/L	1	GCP	11/13/2008
11. 1,3,5-Trimethylbenzene	SW8260B	< 1.0		1.0	µg/L	1	GCP	11/13/2008
12. 1,3-Dichlorobenzene	SW8260B	< 1.0		1.0	µg/L	1	GCP	11/13/2008
13. 1,4-Dichlorobenzene	SW8260B	< 1.0		1.0	µg/L	1	GCP	11/13/2008
14. Benzene	SW8260B	< 1.0		1.0	µg/L	1	GCP	11/13/2008
15. Bromodichloromethane	SW8260B	< 1.0		1.0	µg/L	1	GCP	11/13/2008
16. Bromoform	SW8260B	< 1.0		1.0	µg/L	1	GCP	11/13/2008
17. Bromomethane	SW8260B	< 1.0		1.0	µg/L	1	GCP	11/13/2008
18. Carbon tetrachloride	SW8260B	< 1.0		1.0	µg/L	1	GCP	11/13/2008
19. Chlorobenzene	SW8260B	< 1.0		1.0	µg/L	1	GCP	11/13/2008
20. Chloroethane	SW8260B	< 1.0		1.0	µg/L	1	GCP	11/13/2008
21. Chloroform	SW8260B	< 1.0		1.0	µg/L	1	GCP	11/13/2008
22. Chloromethane	SW8260B	< 1.0		1.0	µg/L	1	GCP	11/13/2008
23. cis-1,2-Dichloroethene	SW8260B	< 1.0		1.0	µg/L	1	GCP	11/13/2008
24. cis-1,3-Dichloropropene	SW8260B	< 1.0		1.0	µg/L	1	GCP	11/13/2008
25. Dibromochloromethane	SW8260B	< 1.0		1.0	µg/L	1	GCP	11/13/2008
26. Ethylbenzene	SW8260B	< 1.0		1.0	µg/L	1	GCP	11/13/2008
27. m,p-Xylene	SW8260B	< 2.0		2.0	µg/L	1	GCP	11/13/2008
28. Methyl tert-butyl ether	SW8260B	< 4.0		4.0	µg/L	1	GCP	11/13/2008
29. Methylene chloride	SW8260B	< 5.0		5.0	µg/L	1	GCP	11/13/2008
30. o-Xylene	SW8260B	< 1.0		1.0	µg/L	1	GCP	11/13/2008
31. Tetrachloroethene	SW8260B	400		10	µg/L	10	GCP	11/14/2008
32. Toluene	SW8260B	< 1.0		1.0	µg/L	1	GCP	11/13/2008
33. trans-1,2-Dichloroethene	SW8260B	< 1.0		1.0	µg/L	1	GCP	11/13/2008
34. trans-1,3-Dichloropropene	SW8260B	< 1.0		1.0	µg/L	1	GCP	11/13/2008
35. Trichloroethene	SW8260B	2.1		1.0	µg/L	1	GCP	11/13/2008
36. Trichlorofluoromethane	SW8260B	< 1.0		1.0	µg/L	1	GCP	11/13/2008
37. Vinyl chloride	SW8260B	< 1.0		1.0	µg/L	1	GCP	11/13/2008

Definitions: PQL - Practical Quantitation Limit
DF - Dilution Factor

Qualifiers (Q): J - Detected below PQL but above MDL: Estimated
S - Spike Recovery Outside Acceptance Limits
B - Analyte detected in associated Method Blank
N - See case narrative for explanation

This report shall not be reproduced except in full, without the written approval of BIO-CHEM Laboratories, Inc.

Note: The sample results reported are based on the sample aliquot(s) tested.

BIO-CHEM Laboratories, Inc.

Date: *11/17/2008*

ANALYTICAL REPORT

CLIENT: DeLisle Associates Ltd.
Lab Order: 0811078
Project: Goodwill Industries
Lab Sample ID: 0811078-02A

Project Number: EN08-044
Client Sample ID: EN-08-044-36
Collection Date: 11/10/2008
Matrix: AQUEOUS

Analyses	Method Ref.	Result	Q	PQL	Units	DF	Analyst	Date
Volatiles by GC/MS								
1. 1,1,1-Trichloroethane	SW8260B	< 1.0		1.0	µg/L	1	GCP	11/14/2008
2. 1,1,2,2-Tetrachloroethane	SW8260B	< 1.0		1.0	µg/L	1	GCP	11/14/2008
3. 1,1,2-Trichloroethane	SW8260B	< 1.0		1.0	µg/L	1	GCP	11/14/2008
4. 1,1-Dichloroethane	SW8260B	< 1.0		1.0	µg/L	1	GCP	11/14/2008
5. 1,1-Dichloroethene	SW8260B	< 1.0		1.0	µg/L	1	GCP	11/14/2008
6. 1,2,4-Trimethylbenzene	SW8260B	< 1.0		1.0	µg/L	1	GCP	11/14/2008
7. 1,2-Dibromoethane	SW8260B	< 1.0		1.0	µg/L	1	GCP	11/14/2008
8. 1,2-Dichlorobenzene	SW8260B	< 1.0		1.0	µg/L	1	GCP	11/14/2008
9. 1,2-Dichloroethane	SW8260B	< 1.0		1.0	µg/L	1	GCP	11/14/2008
10. 1,2-Dichloropropane	SW8260B	< 1.0		1.0	µg/L	1	GCP	11/14/2008
11. 1,3,5-Trimethylbenzene	SW8260B	< 1.0		1.0	µg/L	1	GCP	11/14/2008
12. 1,3-Dichlorobenzene	SW8260B	< 1.0		1.0	µg/L	1	GCP	11/14/2008
13. 1,4-Dichlorobenzene	SW8260B	< 1.0		1.0	µg/L	1	GCP	11/14/2008
14. Benzene	SW8260B	< 1.0		1.0	µg/L	1	GCP	11/14/2008
15. Bromodichloromethane	SW8260B	< 1.0		1.0	µg/L	1	GCP	11/14/2008
16. Bromoform	SW8260B	< 1.0		1.0	µg/L	1	GCP	11/14/2008
17. Bromomethane	SW8260B	< 1.0		1.0	µg/L	1	GCP	11/14/2008
18. Carbon tetrachloride	SW8260B	< 1.0		1.0	µg/L	1	GCP	11/14/2008
19. Chlorobenzene	SW8260B	< 1.0		1.0	µg/L	1	GCP	11/14/2008
20. Chloroethane	SW8260B	< 1.0		1.0	µg/L	1	GCP	11/14/2008
21. Chloroform	SW8260B	< 1.0		1.0	µg/L	1	GCP	11/14/2008
22. Chloromethane	SW8260B	< 1.0		1.0	µg/L	1	GCP	11/14/2008
23. cis-1,2-Dichloroethene	SW8260B	55		1.0	µg/L	1	GCP	11/14/2008
24. cis-1,3-Dichloropropene	SW8260B	< 1.0		1.0	µg/L	1	GCP	11/14/2008
25. Dibromochloromethane	SW8260B	< 1.0		1.0	µg/L	1	GCP	11/14/2008
26. Ethylbenzene	SW8260B	< 1.0		1.0	µg/L	1	GCP	11/14/2008
27. m,p-Xylene	SW8260B	< 2.0		2.0	µg/L	1	GCP	11/14/2008
28. Methyl tert-butyl ether	SW8260B	< 4.0		4.0	µg/L	1	GCP	11/14/2008
29. Methylene chloride	SW8260B	< 5.0		5.0	µg/L	1	GCP	11/14/2008
30. o-Xylene	SW8260B	< 1.0		1.0	µg/L	1	GCP	11/14/2008
31. Tetrachloroethene	SW8260B	17		1.0	µg/L	1	GCP	11/14/2008
32. Toluene	SW8260B	< 1.0		1.0	µg/L	1	GCP	11/14/2008
33. trans-1,2-Dichloroethene	SW8260B	< 1.0		1.0	µg/L	1	GCP	11/14/2008
34. trans-1,3-Dichloropropene	SW8260B	< 1.0		1.0	µg/L	1	GCP	11/14/2008
35. Trichloroethene	SW8260B	6.8		1.0	µg/L	1	GCP	11/14/2008
36. Trichlorofluoromethane	SW8260B	< 1.0		1.0	µg/L	1	GCP	11/14/2008
37. Vinyl chloride	SW8260B	37		1.0	µg/L	1	GCP	11/14/2008

Definitions: PQL - Practical Quantitation Limit
DF - Dilution Factor

Qualifiers (Q): J - Detected below PQL but above MDL: Estimated
S - Spike Recovery Outside Acceptance Limits
B - Analyte detected in associated Method Blank
N - See case narrative for explanation

This report shall not be reproduced except in full, without the written approval of BIO-CHEM Laboratories, Inc.

Note: The sample results reported are based on the sample aliquot(s) tested.

BIO-CHEM Laboratories, Inc.

Date: *11/17/2008*

ANALYTICAL REPORT

CLIENT: DeLisle Associates Ltd.
Lab Order: 0811078
Project: Goodwill Industries
Lab Sample ID: 0811078-03A

Project Number: EN08-044
Client Sample ID: EN-08-044-37
Collection Date: 11/10/2008
Matrix: AQUEOUS

Analyses	Method Ref.	Result	Q	PQL	Units	DF	Analyst	Date
Volatiles by GC/MS								
1. 1,1,1-Trichloroethane	SW8260B	< 1.0		1.0	µg/L	1	GCP	11/13/2008
2. 1,1,2,2-Tetrachloroethane	SW8260B	< 1.0		1.0	µg/L	1	GCP	11/13/2008
3. 1,1,2-Trichloroethane	SW8260B	< 1.0		1.0	µg/L	1	GCP	11/13/2008
4. 1,1-Dichloroethane	SW8260B	< 1.0		1.0	µg/L	1	GCP	11/13/2008
5. 1,1-Dichloroethene	SW8260B	< 1.0		1.0	µg/L	1	GCP	11/13/2008
6. 1,2,4-Trimethylbenzene	SW8260B	< 1.0		1.0	µg/L	1	GCP	11/13/2008
7. 1,2-Dibromoethane	SW8260B	< 1.0		1.0	µg/L	1	GCP	11/13/2008
8. 1,2-Dichlorobenzene	SW8260B	< 1.0		1.0	µg/L	1	GCP	11/13/2008
9. 1,2-Dichloroethane	SW8260B	< 1.0		1.0	µg/L	1	GCP	11/13/2008
10. 1,2-Dichloropropane	SW8260B	< 1.0		1.0	µg/L	1	GCP	11/13/2008
11. 1,3,5-Trimethylbenzene	SW8260B	< 1.0		1.0	µg/L	1	GCP	11/13/2008
12. 1,3-Dichlorobenzene	SW8260B	< 1.0		1.0	µg/L	1	GCP	11/13/2008
13. 1,4-Dichlorobenzene	SW8260B	< 1.0		1.0	µg/L	1	GCP	11/13/2008
14. Benzene	SW8260B	< 1.0		1.0	µg/L	1	GCP	11/13/2008
15. Bromodichloromethane	SW8260B	< 1.0		1.0	µg/L	1	GCP	11/13/2008
16. Bromoform	SW8260B	< 1.0		1.0	µg/L	1	GCP	11/13/2008
17. Bromomethane	SW8260B	< 1.0		1.0	µg/L	1	GCP	11/13/2008
18. Carbon tetrachloride	SW8260B	< 1.0		1.0	µg/L	1	GCP	11/13/2008
19. Chlorobenzene	SW8260B	< 1.0		1.0	µg/L	1	GCP	11/13/2008
20. Chloroethane	SW8260B	< 1.0		1.0	µg/L	1	GCP	11/13/2008
21. Chloroform	SW8260B	< 1.0		1.0	µg/L	1	GCP	11/13/2008
22. Chloromethane	SW8260B	< 1.0		1.0	µg/L	1	GCP	11/13/2008
23. cis-1,2-Dichloroethene	SW8260B	< 1.0		1.0	µg/L	1	GCP	11/13/2008
24. cis-1,3-Dichloropropene	SW8260B	< 1.0		1.0	µg/L	1	GCP	11/13/2008
25. Dibromochloromethane	SW8260B	< 1.0		1.0	µg/L	1	GCP	11/13/2008
26. Ethylbenzene	SW8260B	< 1.0		1.0	µg/L	1	GCP	11/13/2008
27. m,p-Xylene	SW8260B	< 2.0		2.0	µg/L	1	GCP	11/13/2008
28. Methyl tert-butyl ether	SW8260B	< 4.0		4.0	µg/L	1	GCP	11/13/2008
29. Methylene chloride	SW8260B	< 5.0		5.0	µg/L	1	GCP	11/13/2008
30. o-Xylene	SW8260B	< 1.0		1.0	µg/L	1	GCP	11/13/2008
31. Tetrachloroethene	SW8260B	4.8		1.0	µg/L	1	GCP	11/13/2008
32. Toluene	SW8260B	< 1.0		1.0	µg/L	1	GCP	11/13/2008
33. trans-1,2-Dichloroethene	SW8260B	< 1.0		1.0	µg/L	1	GCP	11/13/2008
34. trans-1,3-Dichloropropene	SW8260B	< 1.0		1.0	µg/L	1	GCP	11/13/2008
35. Trichloroethene	SW8260B	< 1.0		1.0	µg/L	1	GCP	11/13/2008
36. Trichlorofluoromethane	SW8260B	< 1.0		1.0	µg/L	1	GCP	11/13/2008
37. Vinyl chloride	SW8260B	< 1.0		1.0	µg/L	1	GCP	11/13/2008

Definitions: PQL - Practical Quantitation Limit
DF - Dilution Factor

Qualifiers (Q): J - Detected below PQL but above MDL: Estimated
S - Spike Recovery Outside Acceptance Limits
B - Analyte detected in associated Method Blank
N - See case narrative for explanation

This report shall not be reproduced except in full, without the written approval of BIO-CHEM Laboratories, Inc.

Note: The sample results reported are based on the sample aliquot(s) tested.

BIO-CHEM Laboratories, Inc.

Date: *11/17/2008*

ANALYTICAL REPORT

CLIENT:	DeLisle Associates Ltd.	**Project Number:**	EN08-044
Lab Order:	0811078	**Client Sample ID:**	EN-08-044-38
Project:	Goodwill Industries	**Collection Date:**	11/10/2008
Lab Sample ID:	0811078-04A	**Matrix:**	AQUEOUS

Analyses	Method Ref.	Result	Q	PQL	Units	DF	Analyst	Date
Volatiles by GC/MS								
1. 1,1,1-Trichloroethane	SW8260B	< 1.0		1.0	µg/L	1	GCP	11/13/2008
2. 1,1,2,2-Tetrachloroethane	SW8260B	< 1.0		1.0	µg/L	1	GCP	11/13/2008
3. 1,1,2-Trichloroethane	SW8260B	< 1.0		1.0	µg/L	1	GCP	11/13/2008
4. 1,1-Dichloroethane	SW8260B	< 1.0		1.0	µg/L	1	GCP	11/13/2008
5. 1,1-Dichloroethene	SW8260B	< 1.0		1.0	µg/L	1	GCP	11/13/2008
6. 1,2,4-Trimethylbenzene	SW8260B	< 1.0		1.0	µg/L	1	GCP	11/13/2008
7. 1,2-Dibromoethane	SW8260B	< 1.0		1.0	µg/L	1	GCP	11/13/2008
8. 1,2-Dichlorobenzene	SW8260B	< 1.0		1.0	µg/L	1	GCP	11/13/2008
9. 1,2-Dichloroethane	SW8260B	< 1.0		1.0	µg/L	1	GCP	11/13/2008
10. 1,2-Dichloropropane	SW8260B	< 1.0		1.0	µg/L	1	GCP	11/13/2008
11. 1,3,5-Trimethylbenzene	SW8260B	< 1.0		1.0	µg/L	1	GCP	11/13/2008
12. 1,3-Dichlorobenzene	SW8260B	< 1.0		1.0	µg/L	1	GCP	11/13/2008
13. 1,4-Dichlorobenzene	SW8260B	< 1.0		1.0	µg/L	1	GCP	11/13/2008
14. Benzene	SW8260B	< 1.0		1.0	µg/L	1	GCP	11/13/2008
15. Bromodichloromethane	SW8260B	< 1.0		1.0	µg/L	1	GCP	11/13/2008
16. Bromoform	SW8260B	< 1.0		1.0	µg/L	1	GCP	11/13/2008
17. Bromomethane	SW8260B	< 1.0		1.0	µg/L	1	GCP	11/13/2008
18. Carbon tetrachloride	SW8260B	< 1.0		1.0	µg/L	1	GCP	11/13/2008
19. Chlorobenzene	SW8260B	< 1.0		1.0	µg/L	1	GCP	11/13/2008
20. Chloroethane	SW8260B	< 1.0		1.0	µg/L	1	GCP	11/13/2008
21. Chloroform	SW8260B	< 1.0		1.0	µg/L	1	GCP	11/13/2008
22. Chloromethane	SW8260B	< 1.0		1.0	µg/L	1	GCP	11/13/2008
23. cis-1,2-Dichloroethene	SW8260B	4.3		1.0	µg/L	1	GCP	11/13/2008
24. cis-1,3-Dichloropropene	SW8260B	< 1.0		1.0	µg/L	1	GCP	11/13/2008
25. Dibromochloromethane	SW8260B	< 1.0		1.0	µg/L	1	GCP	11/13/2008
26. Ethylbenzene	SW8260B	< 1.0		1.0	µg/L	1	GCP	11/13/2008
27. m,p-Xylene	SW8260B	< 2.0		2.0	µg/L	1	GCP	11/13/2008
28. Methyl tert-butyl ether	SW8260B	< 4.0		4.0	µg/L	1	GCP	11/13/2008
29. Methylene chloride	SW8260B	< 5.0		5.0	µg/L	1	GCP	11/13/2008
30. o-Xylene	SW8260B	< 1.0		1.0	µg/L	1	GCP	11/13/2008
31. Tetrachloroethene	SW8260B	34		1.0	µg/L	1	GCP	11/13/2008
32. Toluene	SW8260B	< 1.0		1.0	µg/L	1	GCP	11/13/2008
33. trans-1,2-Dichloroethene	SW8260B	< 1.0		1.0	µg/L	1	GCP	11/13/2008
34. trans-1,3-Dichloropropene	SW8260B	< 1.0		1.0	µg/L	1	GCP	11/13/2008
35. Trichloroethene	SW8260B	1.1		1.0	µg/L	1	GCP	11/13/2008
36. Trichlorofluoromethane	SW8260B	< 1.0		1.0	µg/L	1	GCP	11/13/2008
37. Vinyl chloride	SW8260B	1.7		1.0	µg/L	1	GCP	11/13/2008

Definitions: PQL - Practical Quantitation Limit
DF - Dilution Factor

Qualifiers (Q): J - Detected below PQL but above MDL: Estimated
S - Spike Recovery Outside Acceptance Limits
B - Analyte detected in associated Method Blank
N - See case narrative for explanation

This report shall not be reproduced except in full, without the written approval of BIO-CHEM Laboratories, Inc.

Note: The sample results reported are based on the sample aliquot(s) tested.

BIO-CHEM Laboratories, Inc.

Lab Order: 0811078
Client: DeLisle Associates Ltd.
Project: Goodwill Industries

ANALYTICAL DETAIL REPORT

Sample ID	Client Sample ID	Matrix	Test Name	Date Sampled	TCLP/SPLP Date	Prep Date	QC Batch	Analysis Date	Analytical Batch
0811078-01A	EN-08-044-35	Aqueous	Volatiles by GC/MS	11/10/2008			R59210	11/14/2008	GCMS_Y_081114A
	EN-08-044-35	Aqueous	Volatiles by GC/MS	11/10/2008			R59194	11/13/2008	GCMS_Y_081113C
0811078-02A	EN-08-044-36	Aqueous	Volatiles by GC/MS	11/10/2008			R59210	11/14/2008	GCMS_Y_081114A
	EN-08-044-36	Aqueous	Volatiles by GC/MS	11/10/2008			R59194	11/13/2008	GCMS_Y_081113C
0811078-03A	EN-08-044-37	Aqueous	Volatiles by GC/MS	11/10/2008			R59194	11/13/2008	GCMS_Y_081113C
0811078-04A	EN-08-044-38	Aqueous	Volatiles by GC/MS	11/10/2008			R59194	11/13/2008	GCMS_Y_081113C

BIO-CHEM
ENVIRONMENTAL
ANALYTICAL
LABORATORIES

1049 - 28th Street SE
Grand Rapids, MI 49508
Ph: 616/248-4900
Toll Free: 800/362-LABS
Fax: 616/248-4904

JAN 14 2009

January 12, 2009

Bobby Glasser
DeLisle Associates Ltd.
5050 Sprinkle Rd.
Portage, MI 49002

TEL: (269) 373-4500
FAX (269) 373-1044

RE: Goodwill

Dear Bobby Glasser: Order No.: 0901004

BIO-CHEM Laboratories, Inc. received 3 samples on 1/5/2009 for the analyses presented in the following report.

There were no problems with the analyses and all data for associated QC met EPA or laboratory specifications except where noted in the Case Narrative.

If you have any questions regarding these tests results, please feel free to call.

Please note that unless otherwise instructed, residual samples will be held for sixty (60) days from the original report date. At that time, all non-hazardous samples will be disposed of in accordance with federal, state and local regulations and ordinances, and hazardous samples shall be returned to you. Please contact the laboratory within thirty (30) days if other arrangements for sample retention need to be made.

Sincerely,

Cindy Euwema

Cindy Euwema
Office Manager

Working with you to ensure a better tomorrow.

BIO-CHEM ENVIRONMENTAL ANALYTICAL LABORATORIES
1049 28th Street SE
Grand Rapids, MI 49508
PH: (616) 248-4900
Toll Free: 800-362-LABS
FAX: (616) 248-4904

Chain of Custody

090104

DeLisle P.O. No. 08-392

Firm Name: DeLisle Associates LTD	Turn around time: Standard	Project Number: EN08-101	
Firm Address: 5050 Sprinkle Road	Project Name: Goodwill	Date: 30-Dec-2008	Date Due:
City, State, Zip: Portage, MI 49002	State Samples Taken From: Michigan		
Phone: 269.373.4500 / Fax: 269.373.1044	Contact Person: Bobby Grosser		

Item No	Lab I.D.	Client Sample Number	Date Taken	Time Taken	Sample Description (sample type: water, soil, other)	Number of Containers	Analysis Desired (One per line): VOCs (624 STD. LIST)								Remarks: 10ml meth
1		EN08-101-39	12.27.08	12:15	Soil	2	x								Email Results to:
2		EN08-101-40	12.27.08	13:10	Soil	2	x								bobbyg@delisleassoc.net
3		EN08-101-41	12.27.08	14:20	Soil	2	x								
4															
5															
6															
7															
8															
9															
10															

Released by	Received by	Date	Time
Bobby Grosser - DeLisle	[signature]	1-5-09	1:30

Laboratory use only

☐ Blue Ice ____°

☒ Regular Ice

☐ No Coolant

BIO-CHEM Laboratories, Inc.

Date: *12-Jan-09*

CLIENT: DeLisle Associates Ltd.
Project: Goodwill
Lab Order: 0901004

Work Order Sample Summary

Lab Sample ID	Client Sample ID	Matrix	Collection Date	Date Received
0901004-01A	EN08-101-39	Soil	12/29/2008	1/5/2009
0901004-02A	EN08-101-40	Soil	12/29/2008	1/5/2009
0901004-03A	EN08-101-41	Soil	12/29/2008	1/5/2009

BIO-CHEM Laboratories, Inc. Date: *12-Jan-09*

CLIENT: DeLisle Associates Ltd.
Project: Goodwill
Lab Order: 0901004

CASE NARRATIVE

Samples are routinely analyzed using methods outlined in the following references:

(SW) Test Methods for Evaluating Solid Waste, Physical/Chemical Methods, SW846, 3rd Ed.
(E) Methods for Chemical Analysis of Water and Wastes, EPA-600/4-79-020.
(A) Standard Methods for the Examination of Water and Wastewater, APHA, 18th Ed.
(D) Annual Book of ASTM Standards.

Specific methods utilized for this project are provided in the analytical report and are identified by the reference document abbreviation ( ) followed by the method number.

All QA/QC and sample analyses met method, laboratory and/or regulatory data quality objectives unless otherwise specified below.

No data qualifications required.

BIO-CHEM Laboratories, Inc.

Date: 1/12/2009

ANALYTICAL REPORT

CLIENT: DeLisle Associates Ltd.
Lab Order: 0901004
Project: Goodwill
Lab Sample ID: 0901004-01A

Project Number: EN08-101
Client Sample ID: EN08-101-39
Collection Date: 12/29/2008
Matrix: SOIL

Analyses	Method Ref.	Result	Q	PQL	Units	DF	Analyst	Date
Volatiles by GC/MS (5035)								
1. 1,1,1-Trichloroethane	SW8260B	< 50		50	µg/Kg-dry	1	GCP	1/9/2009
2. 1,1,2,2-Tetrachloroethane	SW8260B	< 50		50	µg/Kg-dry	1	GCP	1/9/2009
3. 1,1,2-Trichloroethane	SW8260B	< 50		50	µg/Kg-dry	1	GCP	1/9/2009
4. 1,1-Dichloroethane	SW8260B	< 50		50	µg/Kg-dry	1	GCP	1/9/2009
5. 1,1-Dichloroethene	SW8260B	< 50		50	µg/Kg-dry	1	GCP	1/9/2009
6. 1,2,4-Trimethylbenzene	SW8260B	< 50		50	µg/Kg-dry	1	GCP	1/9/2009
7. 1,2-Dibromoethane	SW8260B	< 50		50	µg/Kg-dry	1	GCP	1/9/2009
8. 1,2-Dichlorobenzene	SW8260B	< 50		50	µg/Kg-dry	1	GCP	1/9/2009
9. 1,2-Dichloroethane	SW8260B	< 50		50	µg/Kg-dry	1	GCP	1/9/2009
10. 1,2-Dichloropropane	SW8260B	< 50		50	µg/Kg-dry	1	GCP	1/9/2009
11. 1,3,5-Trimethylbenzene	SW8260B	< 50		50	µg/Kg-dry	1	GCP	1/9/2009
12. 1,3-Dichlorobenzene	SW8260B	< 50		50	µg/Kg-dry	1	GCP	1/9/2009
13. 1,4-Dichlorobenzene	SW8260B	< 50		50	µg/Kg-dry	1	GCP	1/9/2009
14. Benzene	SW8260B	< 50		50	µg/Kg-dry	1	GCP	1/9/2009
15. Bromodichloromethane	SW8260B	< 50		50	µg/Kg-dry	1	GCP	1/9/2009
16. Bromoform	SW8260B	< 50		50	µg/Kg-dry	1	GCP	1/9/2009
17. Bromomethane	SW8260B	< 50		50	µg/Kg-dry	1	GCP	1/9/2009
18. Carbon tetrachloride	SW8260B	< 50		50	µg/Kg-dry	1	GCP	1/9/2009
19. Chlorobenzene	SW8260B	< 50		50	µg/Kg-dry	1	GCP	1/9/2009
20. Chloroethane	SW8260B	< 50		50	µg/Kg-dry	1	GCP	1/9/2009
21. Chloroform	SW8260B	< 50		50	µg/Kg-dry	1	GCP	1/9/2009
22. Chloromethane	SW8260B	< 50		50	µg/Kg-dry	1	GCP	1/9/2009
23. cis-1,2-Dichloroethene	SW8260B	< 50		50	µg/Kg-dry	1	GCP	1/9/2009
24. cis-1,3-Dichloropropene	SW8260B	< 50		50	µg/Kg-dry	1	GCP	1/9/2009
25. Dibromochloromethane	SW8260B	< 50		50	µg/Kg-dry	1	GCP	1/9/2009
26. Ethylbenzene	SW8260B	< 50		50	µg/Kg-dry	1	GCP	1/9/2009
27. m,p-Xylene	SW8260B	< 100		100	µg/Kg-dry	1	GCP	1/9/2009
28. Methyl tert-butyl ether	SW8260B	< 250		250	µg/Kg-dry	1	GCP	1/9/2009
29. Methylene chloride	SW8260B	< 100		100	µg/Kg-dry	1	GCP	1/9/2009
30. o-Xylene	SW8260B	< 50		50	µg/Kg-dry	1	GCP	1/9/2009
31. Tetrachloroethene	SW8260B	2,100		50	µg/Kg-dry	1	GCP	1/9/2009
32. Toluene	SW8260B	< 50		50	µg/Kg-dry	1	GCP	1/9/2009
33. trans-1,2-Dichloroethene	SW8260B	< 50		50	µg/Kg-dry	1	GCP	1/9/2009
34. trans-1,3-Dichloropropene	SW8260B	< 50		50	µg/Kg-dry	1	GCP	1/9/2009
35. Trichloroethene	SW8260B	110		50	µg/Kg-dry	1	GCP	1/9/2009
36. Trichlorofluoromethane	SW8260B	230		50	µg/Kg-dry	1	GCP	1/9/2009
37. Vinyl chloride	SW8260B	< 40		40	µg/Kg-dry	1	GCP	1/9/2009

Definitions: PQL - Practical Quantitation Limit
DF - Dilution Factor

Qualifiers (Q): J - Detected below PQL but above MDL: Estimated
S - Spike Recovery Outside Acceptance Limits
B - Analyte detected in associated Method Blank
N - See case narrative for explanation

This report shall not be reproduced except in full, without the written approval of BIO-CHEM Laboratories, Inc.

Note: The sample results reported are based on the sample aliquot(s) tested.

BIO-CHEM Laboratories, Inc.

Date: *1/12/2009*

ANALYTICAL REPORT

CLIENT: DeLisle Associates Ltd.
Lab Order: 0901004
Project: Goodwill
Lab Sample ID: 0901004-02A

Project Number: EN08-101
Client Sample ID: EN08-101-40
Collection Date: 12/29/2008
Matrix: SOIL

Analyses	Method Ref.	Result	Q	PQL	Units	DF	Analyst	Date
Volatiles by GC/MS (5035)								
1. 1,1,1-Trichloroethane	SW8260B	< 50		50	µg/Kg-dry	1	GCP	1/6/2009
2. 1,1,2,2-Tetrachloroethane	SW8260B	< 50		50	µg/Kg-dry	1	GCP	1/6/2009
3. 1,1,2-Trichloroethane	SW8260B	< 50		50	µg/Kg-dry	1	GCP	1/6/2009
4. 1,1-Dichloroethane	SW8260B	< 50		50	µg/Kg-dry	1	GCP	1/6/2009
5. 1,1-Dichloroethene	SW8260B	< 50		50	µg/Kg-dry	1	GCP	1/6/2009
6. 1,2,4-Trimethylbenzene	SW8260B	140		50	µg/Kg-dry	1	GCP	1/6/2009
7. 1,2-Dibromoethane	SW8260B	< 50		50	µg/Kg-dry	1	GCP	1/6/2009
8. 1,2-Dichlorobenzene	SW8260B	< 50		50	µg/Kg-dry	1	GCP	1/6/2009
9. 1,2-Dichloroethane	SW8260B	< 50		50	µg/Kg-dry	1	GCP	1/6/2009
10. 1,2-Dichloropropane	SW8260B	< 50		50	µg/Kg-dry	1	GCP	1/6/2009
11. 1,3,5-Trimethylbenzene	SW8260B	80		50	µg/Kg-dry	1	GCP	1/6/2009
12. 1,3-Dichlorobenzene	SW8260B	< 50		50	µg/Kg-dry	1	GCP	1/6/2009
13. 1,4-Dichlorobenzene	SW8260B	< 50		50	µg/Kg-dry	1	GCP	1/6/2009
14. Benzene	SW8260B	< 50		50	µg/Kg-dry	1	GCP	1/6/2009
15. Bromodichloromethane	SW8260B	< 50		50	µg/Kg-dry	1	GCP	1/6/2009
16. Bromoform	SW8260B	< 50		50	µg/Kg-dry	1	GCP	1/6/2009
17. Bromomethane	SW8260B	< 50		50	µg/Kg-dry	1	GCP	1/6/2009
18. Carbon tetrachloride	SW8260B	< 50		50	µg/Kg-dry	1	GCP	1/6/2009
19. Chlorobenzene	SW8260B	< 50		50	µg/Kg-dry	1	GCP	1/6/2009
20. Chloroethane	SW8260B	< 50		50	µg/Kg-dry	1	GCP	1/6/2009
21. Chloroform	SW8260B	< 50		50	µg/Kg-dry	1	GCP	1/6/2009
22. Chloromethane	SW8260B	< 50		50	µg/Kg-dry	1	GCP	1/6/2009
23. cis-1,2-Dichloroethene	SW8260B	< 50		50	µg/Kg-dry	1	GCP	1/6/2009
24. cis-1,3-Dichloropropene	SW8260B	< 50		50	µg/Kg-dry	1	GCP	1/6/2009
25. Dibromochloromethane	SW8260B	< 50		50	µg/Kg-dry	1	GCP	1/6/2009
26. Ethylbenzene	SW8260B	< 50		50	µg/Kg-dry	1	GCP	1/6/2009
27. m,p-Xylene	SW8260B	< 100		100	µg/Kg-dry	1	GCP	1/6/2009
28. Methyl tert-butyl ether	SW8260B	< 250		250	µg/Kg-dry	1	GCP	1/6/2009
29. Methylene chloride	SW8260B	< 100		100	µg/Kg-dry	1	GCP	1/6/2009
30. o-Xylene	SW8260B	< 50		50	µg/Kg-dry	1	GCP	1/6/2009
31. Tetrachloroethene	SW8260B	690,000		5,000	µg/Kg-dry	100	GCP	1/9/2009
32. Toluene	SW8260B	< 50		50	µg/Kg-dry	1	GCP	1/6/2009
33. trans-1,2-Dichloroethene	SW8260B	< 50		50	µg/Kg-dry	1	GCP	1/6/2009
34. trans-1,3-Dichloropropene	SW8260B	< 50		50	µg/Kg-dry	1	GCP	1/6/2009
35. Trichloroethene	SW8260B	480		50	µg/Kg-dry	1	GCP	1/6/2009
36. Trichlorofluoromethane	SW8260B	< 50		50	µg/Kg-dry	1	GCP	1/6/2009
37. Vinyl chloride	SW8260B	< 40		40	µg/Kg-dry	1	GCP	1/6/2009

Definitions: PQL - Practical Quantitation Limit
DF - Dilution Factor

Qualifiers (Q): J - Detected below PQL but above MDL: Estimated
S - Spike Recovery Outside Acceptance Limits
B - Analyte detected in associated Method Blank
N - See case narrative for explanation

This report shall not be reproduced except in full, without the written approval of BIO-CHEM Laboratories, Inc.

Note: The sample results reported are based on the sample aliquot(s) tested.

BIO-CHEM Laboratories, Inc.

Date: *1/12/2009*

ANALYTICAL REPORT

CLIENT:	DeLisle Associates Ltd.	Project Number:	EN08-101
Lab Order:	0901004	Client Sample ID:	EN08-101-41
Project:	Goodwill	Collection Date:	12/29/2008
Lab Sample ID:	0901004-03A	Matrix:	SOIL

Analyses	Method Ref.	Result	Q	PQL	Units	DF	Analyst	Date
Volatiles by GC/MS (5035)								
1. 1,1,1-Trichloroethane	SW8260B	< 50		50	µg/Kg-dry	1	GCP	1/6/2009
2. 1,1,2,2-Tetrachloroethane	SW8260B	< 50		50	µg/Kg-dry	1	GCP	1/6/2009
3. 1,1,2-Trichloroethane	SW8260B	< 50		50	µg/Kg-dry	1	GCP	1/6/2009
4. 1,1-Dichloroethane	SW8260B	< 50		50	µg/Kg-dry	1	GCP	1/6/2009
5. 1,1-Dichloroethene	SW8260B	< 50		50	µg/Kg-dry	1	GCP	1/6/2009
6. 1,2,4-Trimethylbenzene	SW8260B	190		50	µg/Kg-dry	1	GCP	1/6/2009
7. 1,2-Dibromoethane	SW8260B	< 50		50	µg/Kg-dry	1	GCP	1/6/2009
8. 1,2-Dichlorobenzene	SW8260B	< 50		50	µg/Kg-dry	1	GCP	1/6/2009
9. 1,2-Dichloroethane	SW8260B	< 50		50	µg/Kg-dry	1	GCP	1/6/2009
10. 1,2-Dichloropropane	SW8260B	< 50		50	µg/Kg-dry	1	GCP	1/6/2009
11. 1,3,5-Trimethylbenzene	SW8260B	110		50	µg/Kg-dry	1	GCP	1/6/2009
12. 1,3-Dichlorobenzene	SW8260B	< 50		50	µg/Kg-dry	1	GCP	1/6/2009
13. 1,4-Dichlorobenzene	SW8260B	< 50		50	µg/Kg-dry	1	GCP	1/6/2009
14. Benzene	SW8260B	< 50		50	µg/Kg-dry	1	GCP	1/6/2009
15. Bromodichloromethane	SW8260B	< 50		50	µg/Kg-dry	1	GCP	1/6/2009
16. Bromoform	SW8260B	< 50		50	µg/Kg-dry	1	GCP	1/6/2009
17. Bromomethane	SW8260B	< 50		50	µg/Kg-dry	1	GCP	1/6/2009
18. Carbon tetrachloride	SW8260B	< 50		50	µg/Kg-dry	1	GCP	1/6/2009
19. Chlorobenzene	SW8260B	< 50		50	µg/Kg-dry	1	GCP	1/6/2009
20. Chloroethane	SW8260B	< 50		50	µg/Kg-dry	1	GCP	1/6/2009
21. Chloroform	SW8260B	< 50		50	µg/Kg-dry	1	GCP	1/6/2009
22. Chloromethane	SW8260B	< 50		50	µg/Kg-dry	1	GCP	1/6/2009
23. cis-1,2-Dichloroethene	SW8260B	< 50		50	µg/Kg-dry	1	GCP	1/6/2009
24. cis-1,3-Dichloropropene	SW8260B	< 50		50	µg/Kg-dry	1	GCP	1/6/2009
25. Dibromochloromethane	SW8260B	< 50		50	µg/Kg-dry	1	GCP	1/6/2009
26. Ethylbenzene	SW8260B	< 50		50	µg/Kg-dry	1	GCP	1/6/2009
27. m,p-Xylene	SW8260B	< 100		100	µg/Kg-dry	1	GCP	1/6/2009
28. Methyl tert-butyl ether	SW8260B	< 250		250	µg/Kg-dry	1	GCP	1/6/2009
29. Methylene chloride	SW8260B	< 100		100	µg/Kg-dry	1	GCP	1/6/2009
30. o-Xylene	SW8260B	< 50		50	µg/Kg-dry	1	GCP	1/6/2009
31. Tetrachloroethene	SW8260B	230,000		2,500	µg/Kg-dry	50	GCP	1/9/2009
32. Toluene	SW8260B	< 50		50	µg/Kg-dry	1	GCP	1/6/2009
33. trans-1,2-Dichloroethene	SW8260B	< 50		50	µg/Kg-dry	1	GCP	1/6/2009
34. trans-1,3-Dichloropropene	SW8260B	< 50		50	µg/Kg-dry	1	GCP	1/6/2009
35. Trichloroethene	SW8260B	6,700		50	µg/Kg-dry	1	GCP	1/6/2009
36. Trichlorofluoromethane	SW8260B	< 50		50	µg/Kg-dry	1	GCP	1/6/2009
37. Vinyl chloride	SW8260B	< 40		40	µg/Kg-dry	1	GCP	1/6/2009

Definitions: PQL - Practical Quantitation Limit
DF - Dilution Factor

Qualifiers (Q): J - Detected below PQL but above MDL: Estimated
S - Spike Recovery Outside Acceptance Limits
B - Analyte detected in associated Method Blank
N - See case narrative for explanation

This report shall not be reproduced except in full, without the written approval of BIO-CHEM Laboratories, Inc.

Note: The sample results reported are based on the sample aliquot(s) tested.

BIO-CHEM Laboratories, Inc.

1/12/2009

Lab Order: 0901004
Client: DeLisle Associates Ltd.
Project: Goodwill

ANALYTICAL DETAIL REPORT

Sample ID	Client Sample ID	Matrix	Test Name	Date Sampled	TCLP/SPLP Date	Prep Date	QC Batch	Analysis Date	Analytical Batch
0901004-01A	EN08-101-39	Soil	Volatiles by GC/MS (5035)	12/29/2008		1/6/2009	27600	1/9/2009	GCMS_Z_090109A
0901004-02A	EN08-101-40	Soil	Volatiles by GC/MS (5035)	12/29/2008		1/6/2009	27600	1/9/2009	GCMS_Z_090109A
	EN08-101-40	Soil	Volatiles by GC/MS (5035)	12/29/2008		1/6/2009	27600	1/6/2009	GCMS_Z_090106A
0901004-03A	EN08-101-41	Soil	Volatiles by GC/MS (5035)	12/29/2008		1/6/2009	27600	1/9/2009	GCMS_Z_090109A
	EN08-101-41	Soil	Volatiles by GC/MS (5035)	12/29/2008		1/6/2009	27600	1/6/2009	GCMS_Z_090106A

BIO-CHEM
ENVIRONMENTAL
ANALYTICAL
LABORATORIES

1049 - 28th Street SE
Grand Rapids, MI 49508
Ph: 616/248-4900
Toll Free: 800/362-LABS
Fax: 616/248-4904

February 17, 2009

Andy Graham
DeLisle Associates Ltd.
5050 Sprinkle Rd.
Portage, MI 49002

TEL: (269) 373-4500
FAX (269) 373-1044

RE: Goodwill

Dear Andy Graham:

Order No.: 0902057

BIO-CHEM Laboratories, Inc. received 22 samples on 2/11/2009 for the analyses presented in the following report.

There were no problems with the analyses and all data for associated QC met EPA or laboratory specifications except where noted in the Case Narrative.

If you have any questions regarding these tests results, please feel free to call.

Please note that unless otherwise instructed, residual samples will be held for sixty (60) days from the original report date. At that time, all non-hazardous samples will be disposed of in accordance with federal, state and local regulations and ordinances, and hazardous samples shall be returned to you. Please contact the laboratory within thirty (30) days if other arrangements for sample retention need to be made.

Sincerely,

Cindy Euwema

Cindy Euwema
Office Manager

Working with you to ensure a better tomorrow.

BIO-CHEM Laboratories, Inc. Date: *17-Feb-09*

CLIENT: DeLisle Associates Ltd.
Project: Goodwill
Lab Order: 0902057

CASE NARRATIVE

Samples are routinely analyzed using methods outlined in the following references:

(SW) Test Methods for Evaluating Solid Waste, Physical/Chemical Methods, SW846, 3rd Ed.
(E) Methods for Chemical Analysis of Water and Wastes, EPA-600/4-79-020.
(A) Standard Methods for the Examination of Water and Wastewater, APHA, 18th Ed.
(D) Annual Book of ASTM Standards.

Specific methods utilized for this project are provided in the analytical report and are identified by the reference document abbreviation ( ) followed by the method number.

All QA/QC and sample analyses met method, laboratory and/or regulatory data quality objectives unless otherwise specified below.

No data qualifications required.

BIO-CHEM Laboratories, Inc.

Date: *17-Feb-09*

CLIENT: DeLisle Associates Ltd.
Project: Goodwill
Lab Order: 0902057

Work Order Sample Summary

Lab Sample ID	Client Sample ID	Matrix	Collection Date	Date Received
0902057-01A	EN08-102-42	Soil	2/9/2009	2/11/2009
0902057-02A	EN08-102-46	Soil	2/9/2009	2/11/2009
0902057-03A	EN08-102-50	Soil	2/9/2009	2/11/2009
0902057-04A	EN08-102-53	Soil	2/9/2009	2/11/2009
0902057-05A	EN08-102-57	Soil	2/9/2009	2/11/2009
0902057-06A	EN08-102-61	Soil	2/9/2009	2/11/2009
0902057-07A	EN08-102-62	Soil	2/9/2009	2/11/2009
0902057-08A	EN08-102-43	Aqueous	2/9/2009	2/11/2009
0902057-09A	EN08-102-44	Aqueous	2/9/2009	2/11/2009
0902057-10A	EN08-102-45	Aqueous	2/9/2009	2/11/2009
0902057-11A	EN08-102-47	Aqueous	2/9/2009	2/11/2009
0902057-12A	EN08-102-48	Aqueous	2/9/2009	2/11/2009
0902057-13A	EN08-102-49	Aqueous	2/9/2009	2/11/2009
0902057-14A	EN08-102-51	Aqueous	2/9/2009	2/11/2009
0902057-15A	EN08-102-52	Aqueous	2/9/2009	2/11/2009
0902057-16A	EN08-102-54	Aqueous	2/9/2009	2/11/2009
0902057-17A	EN08-102-55	Aqueous	2/9/2009	2/11/2009
0902057-18A	EN08-102-56	Aqueous	2/9/2009	2/11/2009
0902057-19A	EN08-102-58	Aqueous	2/9/2009	2/11/2009
0902057-20A	EN08-102-59	Aqueous	2/9/2009	2/11/2009
0902057-21A	EN08-102-60	Aqueous	2/9/2009	2/11/2009
0902057-22A	Trip Blank	Aqueous	2/9/2009	2/11/2009

BIO-CHEM Laboratories, Inc.

Date: *2/17/2009*

ANALYTICAL REPORT

CLIENT:	DeLisle Associates Ltd.	**Project Number:**	EN08-102
Lab Order:	0902057	**Client Sample ID:**	EN08-102-42
Project:	Goodwill	**Collection Date:**	2/9/2009
Lab Sample ID:	0902057-01A	**Matrix:**	SOIL

Analyses	Method Ref.	Result	Q	PQL	Units	DF	Analyst	Date
Volatiles by GC/MS (5035)								
1. 1,1,1-Trichloroethane	SW8260B	< 50		50	µg/Kg-dry	1	GCP	2/16/2009
2. 1,1,2,2-Tetrachloroethane	SW8260B	< 50		50	µg/Kg-dry	1	GCP	2/16/2009
3. 1,1,2-Trichloroethane	SW8260B	< 50		50	µg/Kg-dry	1	GCP	2/16/2009
4. 1,1-Dichloroethane	SW8260B	< 50		50	µg/Kg-dry	1	GCP	2/16/2009
5. 1,1-Dichloroethene	SW8260B	< 50		50	µg/Kg-dry	1	GCP	2/16/2009
6. 1,2,4-Trimethylbenzene	SW8260B	< 50		50	µg/Kg-dry	1	GCP	2/16/2009
7. 1,2-Dibromoethane	SW8260B	< 50		50	µg/Kg-dry	1	GCP	2/16/2009
8. 1,2-Dichlorobenzene	SW8260B	< 50		50	µg/Kg-dry	1	GCP	2/16/2009
9. 1,2-Dichloroethane	SW8260B	< 50		50	µg/Kg-dry	1	GCP	2/16/2009
10. 1,2-Dichloropropane	SW8260B	< 50		50	µg/Kg-dry	1	GCP	2/16/2009
11. 1,3,5-Trimethylbenzene	SW8260B	< 50		50	µg/Kg-dry	1	GCP	2/16/2009
12. 1,3-Dichlorobenzene	SW8260B	< 50		50	µg/Kg-dry	1	GCP	2/16/2009
13. 1,4-Dichlorobenzene	SW8260B	< 50		50	µg/Kg-dry	1	GCP	2/16/2009
14. Benzene	SW8260B	< 50		50	µg/Kg-dry	1	GCP	2/16/2009
15. Bromodichloromethane	SW8260B	< 50		50	µg/Kg-dry	1	GCP	2/16/2009
16. Bromoform	SW8260B	< 50		50	µg/Kg-dry	1	GCP	2/16/2009
17. Bromomethane	SW8260B	630		50	µg/Kg-dry	1	GCP	2/16/2009
18. Carbon tetrachloride	SW8260B	< 50		50	µg/Kg-dry	1	GCP	2/16/2009
19. Chlorobenzene	SW8260B	< 50		50	µg/Kg-dry	1	GCP	2/16/2009
20. Chloroethane	SW8260B	< 50		50	µg/Kg-dry	1	GCP	2/16/2009
21. Chloroform	SW8260B	< 50		50	µg/Kg-dry	1	GCP	2/16/2009
22. Chloromethane	SW8260B	< 50		50	µg/Kg-dry	1	GCP	2/16/2009
23. cis-1,2-Dichloroethene	SW8260B	< 50		50	µg/Kg-dry	1	GCP	2/16/2009
24. cis-1,3-Dichloropropene	SW8260B	< 50		50	µg/Kg-dry	1	GCP	2/16/2009
25. Dibromochloromethane	SW8260B	< 50		50	µg/Kg-dry	1	GCP	2/16/2009
26. Ethylbenzene	SW8260B	< 50		50	µg/Kg-dry	1	GCP	2/16/2009
27. m,p-Xylene	SW8260B	< 100		100	µg/Kg-dry	1	GCP	2/16/2009
28. Methyl tert-butyl ether	SW8260B	< 250		250	µg/Kg-dry	1	GCP	2/16/2009
29. Methylene chloride	SW8260B	< 100		100	µg/Kg-dry	1	GCP	2/16/2009
30. o-Xylene	SW8260B	< 50		50	µg/Kg-dry	1	GCP	2/16/2009
31. Tetrachloroethene	SW8260B	300		50	µg/Kg-dry	1	GCP	2/16/2009
32. Toluene	SW8260B	< 50		50	µg/Kg-dry	1	GCP	2/16/2009
33. trans-1,2-Dichloroethene	SW8260B	< 50		50	µg/Kg-dry	1	GCP	2/16/2009
34. trans-1,3-Dichloropropene	SW8260B	< 50		50	µg/Kg-dry	1	GCP	2/16/2009
35. Trichloroethene	SW8260B	< 50		50	µg/Kg-dry	1	GCP	2/16/2009
36. Trichlorofluoromethane	SW8260B	< 50		50	µg/Kg-dry	1	GCP	2/16/2009
37. Vinyl chloride	SW8260B	< 40		40	µg/Kg-dry	1	GCP	2/16/2009

Definitions: PQL - Practical Quantitation Limit
DF - Dilution Factor

Qualifiers (Q): J - Detected below PQL but above MDL: Estimated
S - Spike Recovery Outside Acceptance Limits
B - Analyte detected in associated Method Blank
N - See case narrative for explanation

This report shall not be reproduced except in full, without the written approval of BIO-CHEM Laboratories, Inc.

Note: The sample results reported are based on the sample aliquot(s) tested.

BIO-CHEM Laboratories, Inc.

Date: *2/17/2009*

ANALYTICAL REPORT

CLIENT:	DeLisle Associates Ltd.	Project Number:	EN08-102
Lab Order:	0902057	Client Sample ID:	EN08-102-46
Project:	Goodwill	Collection Date:	2/9/2009
Lab Sample ID:	0902057-02A	Matrix:	SOIL

Analyses	Method Ref.	Result	Q	PQL	Units	DF	Analyst	Date
Volatiles by GC/MS (5035)								
1. 1,1,1-Trichloroethane	SW8260B	< 50		50	µg/Kg-dry	1	GCP	2/16/2009
2. 1,1,2,2-Tetrachloroethane	SW8260B	< 50		50	µg/Kg-dry	1	GCP	2/16/2009
3. 1,1,2-Trichloroethane	SW8260B	< 50		50	µg/Kg-dry	1	GCP	2/16/2009
4. 1,1-Dichloroethane	SW8260B	< 50		50	µg/Kg-dry	1	GCP	2/16/2009
5. 1,1-Dichloroethene	SW8260B	< 50		50	µg/Kg-dry	1	GCP	2/16/2009
6. 1,2,4-Trimethylbenzene	SW8260B	< 50		50	µg/Kg-dry	1	GCP	2/16/2009
7. 1,2-Dibromoethane	SW8260B	< 50		50	µg/Kg-dry	1	GCP	2/16/2009
8. 1,2-Dichlorobenzene	SW8260B	< 50		50	µg/Kg-dry	1	GCP	2/16/2009
9. 1,2-Dichloroethane	SW8260B	< 50		50	µg/Kg-dry	1	GCP	2/16/2009
10. 1,2-Dichloropropane	SW8260B	< 50		50	µg/Kg-dry	1	GCP	2/16/2009
11. 1,3,5-Trimethylbenzene	SW8260B	< 50		50	µg/Kg-dry	1	GCP	2/16/2009
12. 1,3-Dichlorobenzene	SW8260B	< 50		50	µg/Kg-dry	1	GCP	2/16/2009
13. 1,4-Dichlorobenzene	SW8260B	< 50		50	µg/Kg-dry	1	GCP	2/16/2009
14. Benzene	SW8260B	< 50		50	µg/Kg-dry	1	GCP	2/16/2009
15. Bromodichloromethane	SW8260B	< 50		50	µg/Kg-dry	1	GCP	2/16/2009
16. Bromoform	SW8260B	< 50		50	µg/Kg-dry	1	GCP	2/16/2009
17. Bromomethane	SW8260B	1,300		50	µg/Kg-dry	1	GCP	2/16/2009
18. Carbon tetrachloride	SW8260B	< 50		50	µg/Kg-dry	1	GCP	2/16/2009
19. Chlorobenzene	SW8260B	< 50		50	µg/Kg-dry	1	GCP	2/16/2009
20. Chloroethane	SW8260B	< 50		50	µg/Kg-dry	1	GCP	2/16/2009
21. Chloroform	SW8260B	< 50		50	µg/Kg-dry	1	GCP	2/16/2009
22. Chloromethane	SW8260B	< 50		50	µg/Kg-dry	1	GCP	2/16/2009
23. cis-1,2-Dichloroethene	SW8260B	< 50		50	µg/Kg-dry	1	GCP	2/16/2009
24. cis-1,3-Dichloropropene	SW8260B	< 50		50	µg/Kg-dry	1	GCP	2/16/2009
25. Dibromochloromethane	SW8260B	< 50		50	µg/Kg-dry	1	GCP	2/16/2009
26. Ethylbenzene	SW8260B	< 50		50	µg/Kg-dry	1	GCP	2/16/2009
27. m,p-Xylene	SW8260B	110		100	µg/Kg-dry	1	GCP	2/16/2009
28. Methyl tert-butyl ether	SW8260B	< 250		250	µg/Kg-dry	1	GCP	2/16/2009
29. Methylene chloride	SW8260B	< 100		100	µg/Kg-dry	1	GCP	2/16/2009
30. o-Xylene	SW8260B	< 50		50	µg/Kg-dry	1	GCP	2/16/2009
31. Tetrachloroethene	SW8260B	450		50	µg/Kg-dry	1	GCP	2/16/2009
32. Toluene	SW8260B	130		50	µg/Kg-dry	1	GCP	2/16/2009
33. trans-1,2-Dichloroethene	SW8260B	< 50		50	µg/Kg-dry	1	GCP	2/16/2009
34. trans-1,3-Dichloropropene	SW8260B	< 50		50	µg/Kg-dry	1	GCP	2/16/2009
35. Trichloroethene	SW8260B	< 50		50	µg/Kg-dry	1	GCP	2/16/2009
36. Trichlorofluoromethane	SW8260B	< 50		50	µg/Kg-dry	1	GCP	2/16/2009
37. Vinyl chloride	SW8260B	< 40		40	µg/Kg-dry	1	GCP	2/16/2009

Definitions: PQL - Practical Quantitation Limit
DF - Dilution Factor

Qualifiers (Q): J - Detected below PQL but above MDL: Estimated
S - Spike Recovery Outside Acceptance Limits
B - Analyte detected in associated Method Blank
N - See case narrative for explanation

This report shall not be reproduced except in full, without the written approval of BIO-CHEM Laboratories, Inc.

Note: The sample results reported are based on the sample aliquot(s) tested.

BIO-CHEM Laboratories, Inc.

Date: *2/17/2009*

ANALYTICAL REPORT

CLIENT:	DeLisle Associates Ltd.	**Project Number:**	EN08-102
Lab Order:	0902057	**Client Sample ID:**	EN08-102-50
Project:	Goodwill	**Collection Date:**	2/9/2009
Lab Sample ID:	0902057-03A	**Matrix:**	SOIL

Analyses	Method Ref.	Result	Q	PQL	Units	DF	Analyst	Date
Volatiles by GC/MS (5035)								
1. 1,1,1-Trichloroethane	SW8260B	< 50		50	µg/Kg-dry	1	GCP	2/16/2009
2. 1,1,2,2-Tetrachloroethane	SW8260B	< 50		50	µg/Kg-dry	1	GCP	2/16/2009
3. 1,1,2-Trichloroethane	SW8260B	< 50		50	µg/Kg-dry	1	GCP	2/16/2009
4. 1,1-Dichloroethane	SW8260B	< 50		50	µg/Kg-dry	1	GCP	2/16/2009
5. 1,1-Dichloroethene	SW8260B	< 50		50	µg/Kg-dry	1	GCP	2/16/2009
6. 1,2,4-Trimethylbenzene	SW8260B	< 50		50	µg/Kg-dry	1	GCP	2/16/2009
7. 1,2-Dibromoethane	SW8260B	< 50		50	µg/Kg-dry	1	GCP	2/16/2009
8. 1,2-Dichlorobenzene	SW8260B	< 50		50	µg/Kg-dry	1	GCP	2/16/2009
9. 1,2-Dichloroethane	SW8260B	< 50		50	µg/Kg-dry	1	GCP	2/16/2009
10. 1,2-Dichloropropane	SW8260B	< 50		50	µg/Kg-dry	1	GCP	2/16/2009
11. 1,3,5-Trimethylbenzene	SW8260B	< 50		50	µg/Kg-dry	1	GCP	2/16/2009
12. 1,3-Dichlorobenzene	SW8260B	< 50		50	µg/Kg-dry	1	GCP	2/16/2009
13. 1,4-Dichlorobenzene	SW8260B	< 50		50	µg/Kg-dry	1	GCP	2/16/2009
14. Benzene	SW8260B	< 50		50	µg/Kg-dry	1	GCP	2/16/2009
15. Bromodichloromethane	SW8260B	< 50		50	µg/Kg-dry	1	GCP	2/16/2009
16. Bromoform	SW8260B	< 50		50	µg/Kg-dry	1	GCP	2/16/2009
17. Bromomethane	SW8260B	930		50	µg/Kg-dry	1	GCP	2/16/2009
18. Carbon tetrachloride	SW8260B	< 50		50	µg/Kg-dry	1	GCP	2/16/2009
19. Chlorobenzene	SW8260B	< 50		50	µg/Kg-dry	1	GCP	2/16/2009
20. Chloroethane	SW8260B	< 50		50	µg/Kg-dry	1	GCP	2/16/2009
21. Chloroform	SW8260B	< 50		50	µg/Kg-dry	1	GCP	2/16/2009
22. Chloromethane	SW8260B	< 50		50	µg/Kg-dry	1	GCP	2/16/2009
23. cis-1,2-Dichloroethene	SW8260B	< 50		50	µg/Kg-dry	1	GCP	2/16/2009
24. cis-1,3-Dichloropropene	SW8260B	< 50		50	µg/Kg-dry	1	GCP	2/16/2009
25. Dibromochloromethane	SW8260B	< 50		50	µg/Kg-dry	1	GCP	2/16/2009
26. Ethylbenzene	SW8260B	< 50		50	µg/Kg-dry	1	GCP	2/16/2009
27. m,p-Xylene	SW8260B	< 100		100	µg/Kg-dry	1	GCP	2/16/2009
28. Methyl tert-butyl ether	SW8260B	< 250		250	µg/Kg-dry	1	GCP	2/16/2009
29. Methylene chloride	SW8260B	< 100		100	µg/Kg-dry	1	GCP	2/16/2009
30. o-Xylene	SW8260B	< 50		50	µg/Kg-dry	1	GCP	2/16/2009
31. Tetrachloroethene	SW8260B	7,800		50	µg/Kg-dry	1	GCP	2/16/2009
32. Toluene	SW8260B	< 50		50	µg/Kg-dry	1	GCP	2/16/2009
33. trans-1,2-Dichloroethene	SW8260B	< 50		50	µg/Kg-dry	1	GCP	2/16/2009
34. trans-1,3-Dichloropropene	SW8260B	< 50		50	µg/Kg-dry	1	GCP	2/16/2009
35. Trichloroethene	SW8260B	< 50		50	µg/Kg-dry	1	GCP	2/16/2009
36. Trichlorofluoromethane	SW8260B	< 50		50	µg/Kg-dry	1	GCP	2/16/2009
37. Vinyl chloride	SW8260B	< 40		40	µg/Kg-dry	1	GCP	2/16/2009

Definitions: PQL - Practical Quantitation Limit
DF - Dilution Factor

Qualifiers (Q): J - Detected below PQL but above MDL: Estimated
S - Spike Recovery Outside Acceptance Limits
B - Analyte detected in associated Method Blank
N - See case narrative for explanation

This report shall not be reproduced except in full, without the written approval of BIO-CHEM Laboratories, Inc.

Note: The sample results reported are based on the sample aliquot(s) tested.

BIO-CHEM Laboratories, Inc.

Date: *2/17/2009*

ANALYTICAL REPORT

CLIENT:	DeLisle Associates Ltd.	**Project Number:**	EN08-102
Lab Order:	0902057	**Client Sample ID:**	EN08-102-53
Project:	Goodwill	**Collection Date:**	2/9/2009
Lab Sample ID:	0902057-04A	**Matrix:**	SOIL

Analyses	Method Ref.	Result	Q	PQL	Units	DF	Analyst	Date
Volatiles by GC/MS (5035)								
1. 1,1,1-Trichloroethane	SW8260B	< 50		50	µg/Kg-dry	1	GCP	2/16/2009
2. 1,1,2,2-Tetrachloroethane	SW8260B	< 50		50	µg/Kg-dry	1	GCP	2/16/2009
3. 1,1,2-Trichloroethane	SW8260B	< 50		50	µg/Kg-dry	1	GCP	2/16/2009
4. 1,1-Dichloroethane	SW8260B	< 50		50	µg/Kg-dry	1	GCP	2/16/2009
5. 1,1-Dichloroethene	SW8260B	< 50		50	µg/Kg-dry	1	GCP	2/16/2009
6. 1,2,4-Trimethylbenzene	SW8260B	< 50		50	µg/Kg-dry	1	GCP	2/16/2009
7. 1,2-Dibromoethane	SW8260B	< 50		50	µg/Kg-dry	1	GCP	2/16/2009
8. 1,2-Dichlorobenzene	SW8260B	< 50		50	µg/Kg-dry	1	GCP	2/16/2009
9. 1,2-Dichloroethane	SW8260B	< 50		50	µg/Kg-dry	1	GCP	2/16/2009
10. 1,2-Dichloropropane	SW8260B	< 50		50	µg/Kg-dry	1	GCP	2/16/2009
11. 1,3,5-Trimethylbenzene	SW8260B	< 50		50	µg/Kg-dry	1	GCP	2/16/2009
12. 1,3-Dichlorobenzene	SW8260B	< 50		50	µg/Kg-dry	1	GCP	2/16/2009
13. 1,4-Dichlorobenzene	SW8260B	< 50		50	µg/Kg-dry	1	GCP	2/16/2009
14. Benzene	SW8260B	< 50		50	µg/Kg-dry	1	GCP	2/16/2009
15. Bromodichloromethane	SW8260B	< 50		50	µg/Kg-dry	1	GCP	2/16/2009
16. Bromoform	SW8260B	< 50		50	µg/Kg-dry	1	GCP	2/16/2009
17. Bromomethane	SW8260B	240		50	µg/Kg-dry	1	GCP	2/16/2009
18. Carbon tetrachloride	SW8260B	< 50		50	µg/Kg-dry	1	GCP	2/16/2009
19. Chlorobenzene	SW8260B	< 50		50	µg/Kg-dry	1	GCP	2/16/2009
20. Chloroethane	SW8260B	< 50		50	µg/Kg-dry	1	GCP	2/16/2009
21. Chloroform	SW8260B	< 50		50	µg/Kg-dry	1	GCP	2/16/2009
22. Chloromethane	SW8260B	< 50		50	µg/Kg-dry	1	GCP	2/16/2009
23. cis-1,2-Dichloroethene	SW8260B	< 50		50	µg/Kg-dry	1	GCP	2/16/2009
24. cis-1,3-Dichloropropene	SW8260B	< 50		50	µg/Kg-dry	1	GCP	2/16/2009
25. Dibromochloromethane	SW8260B	< 50		50	µg/Kg-dry	1	GCP	2/16/2009
26. Ethylbenzene	SW8260B	< 50		50	µg/Kg-dry	1	GCP	2/16/2009
27. m,p-Xylene	SW8260B	< 100		100	µg/Kg-dry	1	GCP	2/16/2009
28. Methyl tert-butyl ether	SW8260B	< 250		250	µg/Kg-dry	1	GCP	2/16/2009
29. Methylene chloride	SW8260B	< 100		100	µg/Kg-dry	1	GCP	2/16/2009
30. o-Xylene	SW8260B	< 50		50	µg/Kg-dry	1	GCP	2/16/2009
31. Tetrachloroethene	SW8260B	120		50	µg/Kg-dry	1	GCP	2/16/2009
32. Toluene	SW8260B	< 50		50	µg/Kg-dry	1	GCP	2/16/2009
33. trans-1,2-Dichloroethene	SW8260B	< 50		50	µg/Kg-dry	1	GCP	2/16/2009
34. trans-1,3-Dichloropropene	SW8260B	< 50		50	µg/Kg-dry	1	GCP	2/16/2009
35. Trichloroethene	SW8260B	< 50		50	µg/Kg-dry	1	GCP	2/16/2009
36. Trichlorofluoromethane	SW8260B	< 50		50	µg/Kg-dry	1	GCP	2/16/2009
37. Vinyl chloride	SW8260B	< 40		40	µg/Kg-dry	1	GCP	2/16/2009

Definitions: PQL - Practical Quantitation Limit
DF - Dilution Factor

Qualifiers (Q): J - Detected below PQL but above MDL: Estimated
S - Spike Recovery Outside Acceptance Limits
B - Analyte detected in associated Method Blank
N - See case narrative for explanation

This report shall not be reproduced except in full, without the written approval of BIO-CHEM Laboratories, Inc.

Note: The sample results reported are based on the sample aliquot(s) tested.

BIO-CHEM Laboratories, Inc.

Date: *2/17/2009*

ANALYTICAL REPORT

CLIENT:	DeLisle Associates Ltd.	Project Number:	EN08-102
Lab Order:	0902057	Client Sample ID:	EN08-102-57
Project:	Goodwill	Collection Date:	2/9/2009
Lab Sample ID:	0902057-05A	Matrix:	SOIL

Analyses	Method Ref.	Result	Q	PQL	Units	DF	Analyst	Date
Volatiles by GC/MS (5035)								
1. 1,1,1-Trichloroethane	SW8260B	< 50		50	µg/Kg-dry	1	GCP	2/16/2009
2. 1,1,2,2-Tetrachloroethane	SW8260B	< 50		50	µg/Kg-dry	1	GCP	2/16/2009
3. 1,1,2-Trichloroethane	SW8260B	< 50		50	µg/Kg-dry	1	GCP	2/16/2009
4. 1,1-Dichloroethane	SW8260B	< 50		50	µg/Kg-dry	1	GCP	2/16/2009
5. 1,1-Dichloroethene	SW8260B	< 50		50	µg/Kg-dry	1	GCP	2/16/2009
6. 1,2,4-Trimethylbenzene	SW8260B	< 50		50	µg/Kg-dry	1	GCP	2/16/2009
7. 1,2-Dibromoethane	SW8260B	< 50		50	µg/Kg-dry	1	GCP	2/16/2009
8. 1,2-Dichlorobenzene	SW8260B	< 50		50	µg/Kg-dry	1	GCP	2/16/2009
9. 1,2-Dichloroethane	SW8260B	< 50		50	µg/Kg-dry	1	GCP	2/16/2009
10. 1,2-Dichloropropane	SW8260B	< 50		50	µg/Kg-dry	1	GCP	2/16/2009
11. 1,3,5-Trimethylbenzene	SW8260B	< 50		50	µg/Kg-dry	1	GCP	2/16/2009
12. 1,3-Dichlorobenzene	SW8260B	< 50		50	µg/Kg-dry	1	GCP	2/16/2009
13. 1,4-Dichlorobenzene	SW8260B	< 50		50	µg/Kg-dry	1	GCP	2/16/2009
14. Benzene	SW8260B	< 50		50	µg/Kg-dry	1	GCP	2/16/2009
15. Bromodichloromethane	SW8260B	< 50		50	µg/Kg-dry	1	GCP	2/16/2009
16. Bromoform	SW8260B	< 50		50	µg/Kg-dry	1	GCP	2/16/2009
17. Bromomethane	SW8260B	660		50	µg/Kg-dry	1	GCP	2/16/2009
18. Carbon tetrachloride	SW8260B	< 50		50	µg/Kg-dry	1	GCP	2/16/2009
19. Chlorobenzene	SW8260B	< 50		50	µg/Kg-dry	1	GCP	2/16/2009
20. Chloroethane	SW8260B	< 50		50	µg/Kg-dry	1	GCP	2/16/2009
21. Chloroform	SW8260B	< 50		50	µg/Kg-dry	1	GCP	2/16/2009
22. Chloromethane	SW8260B	< 50		50	µg/Kg-dry	1	GCP	2/16/2009
23. cis-1,2-Dichloroethene	SW8260B	< 50		50	µg/Kg-dry	1	GCP	2/16/2009
24. cis-1,3-Dichloropropene	SW8260B	< 50		50	µg/Kg-dry	1	GCP	2/16/2009
25. Dibromochloromethane	SW8260B	< 50		50	µg/Kg-dry	1	GCP	2/16/2009
26. Ethylbenzene	SW8260B	< 50		50	µg/Kg-dry	1	GCP	2/16/2009
27. m,p-Xylene	SW8260B	< 100		100	µg/Kg-dry	1	GCP	2/16/2009
28. Methyl tert-butyl ether	SW8260B	< 250		250	µg/Kg-dry	1	GCP	2/16/2009
29. Methylene chloride	SW8260B	< 100		100	µg/Kg-dry	1	GCP	2/16/2009
30. o-Xylene	SW8260B	< 50		50	µg/Kg-dry	1	GCP	2/16/2009
31. Tetrachloroethene	SW8260B	< 50		50	µg/Kg-dry	1	GCP	2/16/2009
32. Toluene	SW8260B	< 50		50	µg/Kg-dry	1	GCP	2/16/2009
33. trans-1,2-Dichloroethene	SW8260B	< 50		50	µg/Kg-dry	1	GCP	2/16/2009
34. trans-1,3-Dichloropropene	SW8260B	< 50		50	µg/Kg-dry	1	GCP	2/16/2009
35. Trichloroethene	SW8260B	< 50		50	µg/Kg-dry	1	GCP	2/16/2009
36. Trichlorofluoromethane	SW8260B	< 50		50	µg/Kg-dry	1	GCP	2/16/2009
37. Vinyl chloride	SW8260B	< 40		40	µg/Kg-dry	1	GCP	2/16/2009

Definitions: PQL - Practical Quantitation Limit
DF - Dilution Factor

Qualifiers (Q): J - Detected below PQL but above MDL: Estimated
S - Spike Recovery Outside Acceptance Limits
B - Analyte detected in associated Method Blank
N - See case narrative for explanation

This report shall not be reproduced except in full, without the written approval of BIO-CHEM Laboratories, Inc.

Note: The sample results reported are based on the sample aliquot(s) tested.

BIO-CHEM Laboratories, Inc.

Date: *2/17/2009*

ANALYTICAL REPORT

CLIENT:	DeLisle Associates Ltd.	**Project Number:**	EN08-102
Lab Order:	0902057	**Client Sample ID:**	EN08-102-61
Project:	Goodwill	**Collection Date:**	2/9/2009
Lab Sample ID:	0902057-06A	**Matrix:**	SOIL

Analyses	Method Ref.	Result	Q	PQL	Units	DF	Analyst	Date
Volatiles by GC/MS (5035)								
1. 1,1,1-Trichloroethane	SW8260B	< 50		50	µg/Kg-dry	1	GCP	2/16/2009
2. 1,1,2,2-Tetrachloroethane	SW8260B	< 50		50	µg/Kg-dry	1	GCP	2/16/2009
3. 1,1,2-Trichloroethane	SW8260B	< 50		50	µg/Kg-dry	1	GCP	2/16/2009
4. 1,1-Dichloroethane	SW8260B	< 50		50	µg/Kg-dry	1	GCP	2/16/2009
5. 1,1-Dichloroethene	SW8260B	< 50		50	µg/Kg-dry	1	GCP	2/16/2009
6. 1,2,4-Trimethylbenzene	SW8260B	< 50		50	µg/Kg-dry	1	GCP	2/16/2009
7. 1,2-Dibromoethane	SW8260B	< 50		50	µg/Kg-dry	1	GCP	2/16/2009
8. 1,2-Dichlorobenzene	SW8260B	< 50		50	µg/Kg-dry	1	GCP	2/16/2009
9. 1,2-Dichloroethane	SW8260B	< 50		50	µg/Kg-dry	1	GCP	2/16/2009
10. 1,2-Dichloropropane	SW8260B	< 50		50	µg/Kg-dry	1	GCP	2/16/2009
11. 1,3,5-Trimethylbenzene	SW8260B	< 50		50	µg/Kg-dry	1	GCP	2/16/2009
12. 1,3-Dichlorobenzene	SW8260B	< 50		50	µg/Kg-dry	1	GCP	2/16/2009
13. 1,4-Dichlorobenzene	SW8260B	< 50		50	µg/Kg-dry	1	GCP	2/16/2009
14. Benzene	SW8260B	< 50		50	µg/Kg-dry	1	GCP	2/16/2009
15. Bromodichloromethane	SW8260B	< 50		50	µg/Kg-dry	1	GCP	2/16/2009
16. Bromoform	SW8260B	< 50		50	µg/Kg-dry	1	GCP	2/16/2009
17. Bromomethane	SW8260B	790		50	µg/Kg-dry	1	GCP	2/16/2009
18. Carbon tetrachloride	SW8260B	< 50		50	µg/Kg-dry	1	GCP	2/16/2009
19. Chlorobenzene	SW8260B	< 50		50	µg/Kg-dry	1	GCP	2/16/2009
20. Chloroethane	SW8260B	< 50		50	µg/Kg-dry	1	GCP	2/16/2009
21. Chloroform	SW8260B	< 50		50	µg/Kg-dry	1	GCP	2/16/2009
22. Chloromethane	SW8260B	< 50		50	µg/Kg-dry	1	GCP	2/16/2009
23. cis-1,2-Dichloroethene	SW8260B	< 50		50	µg/Kg-dry	1	GCP	2/16/2009
24. cis-1,3-Dichloropropene	SW8260B	< 50		50	µg/Kg-dry	1	GCP	2/16/2009
25. Dibromochloromethane	SW8260B	< 50		50	µg/Kg-dry	1	GCP	2/16/2009
26. Ethylbenzene	SW8260B	< 50		50	µg/Kg-dry	1	GCP	2/16/2009
27. m,p-Xylene	SW8260B	< 100		100	µg/Kg-dry	1	GCP	2/16/2009
28. Methyl tert-butyl ether	SW8260B	< 250		250	µg/Kg-dry	1	GCP	2/16/2009
29. Methylene chloride	SW8260B	< 100		100	µg/Kg-dry	1	GCP	2/16/2009
30. o-Xylene	SW8260B	< 50		50	µg/Kg-dry	1	GCP	2/16/2009
31. Tetrachloroethene	SW8260B	160		50	µg/Kg-dry	1	GCP	2/16/2009
32. Toluene	SW8260B	< 50		50	µg/Kg-dry	1	GCP	2/16/2009
33. trans-1,2-Dichloroethene	SW8260B	< 50		50	µg/Kg-dry	1	GCP	2/16/2009
34. trans-1,3-Dichloropropene	SW8260B	< 50		50	µg/Kg-dry	1	GCP	2/16/2009
35. Trichloroethene	SW8260B	< 50		50	µg/Kg-dry	1	GCP	2/16/2009
36. Trichlorofluoromethane	SW8260B	< 50		50	µg/Kg-dry	1	GCP	2/16/2009
37. Vinyl chloride	SW8260B	< 40		40	µg/Kg-dry	1	GCP	2/16/2009

Definitions: PQL - Practical Quantitation Limit
DF - Dilution Factor

Qualifiers (Q): J - Detected below PQL but above MDL: Estimated
S - Spike Recovery Outside Acceptance Limits
B - Analyte detected in associated Method Blank
N - See case narrative for explanation

This report shall not be reproduced except in full, without the written approval of BIO-CHEM Laboratories, Inc.

Note: The sample results reported are based on the sample aliquot(s) tested.

BIO-CHEM Laboratories, Inc.

Date: 2/17/2009

ANALYTICAL REPORT

CLIENT: DeLisle Associates Ltd.
Lab Order: 0902057
Project: Goodwill
Lab Sample ID: 0902057-07A

Project Number: EN08-102
Client Sample ID: EN08-102-62
Collection Date: 2/9/2009
Matrix: SOIL

Analyses	Method Ref.	Result	Q	PQL	Units	DF	Analyst	Date
Volatiles by GC/MS (5035)								
1. 1,1,1-Trichloroethane	SW8260B	< 50		50	µg/Kg-dry	1	GCP	2/16/2009
2. 1,1,2,2-Tetrachloroethane	SW8260B	< 50		50	µg/Kg-dry	1	GCP	2/16/2009
3. 1,1,2-Trichloroethane	SW8260B	< 50		50	µg/Kg-dry	1	GCP	2/16/2009
4. 1,1-Dichloroethane	SW8260B	< 50		50	µg/Kg-dry	1	GCP	2/16/2009
5. 1,1-Dichloroethene	SW8260B	< 50		50	µg/Kg-dry	1	GCP	2/16/2009
6. 1,2,4-Trimethylbenzene	SW8260B	< 50		50	µg/Kg-dry	1	GCP	2/16/2009
7. 1,2-Dibromoethane	SW8260B	< 50		50	µg/Kg-dry	1	GCP	2/16/2009
8. 1,2-Dichlorobenzene	SW8260B	< 50		50	µg/Kg-dry	1	GCP	2/16/2009
9. 1,2-Dichloroethane	SW8260B	< 50		50	µg/Kg-dry	1	GCP	2/16/2009
10. 1,2-Dichloropropane	SW8260B	< 50		50	µg/Kg-dry	1	GCP	2/16/2009
11. 1,3,5-Trimethylbenzene	SW8260B	< 50		50	µg/Kg-dry	1	GCP	2/16/2009
12. 1,3-Dichlorobenzene	SW8260B	< 50		50	µg/Kg-dry	1	GCP	2/16/2009
13. 1,4-Dichlorobenzene	SW8260B	< 50		50	µg/Kg-dry	1	GCP	2/16/2009
14. Benzene	SW8260B	< 50		50	µg/Kg-dry	1	GCP	2/16/2009
15. Bromodichloromethane	SW8260B	< 50		50	µg/Kg-dry	1	GCP	2/16/2009
16. Bromoform	SW8260B	< 50		50	µg/Kg-dry	1	GCP	2/16/2009
17. Bromomethane	SW8260B	700		50	µg/Kg-dry	1	GCP	2/16/2009
18. Carbon tetrachloride	SW8260B	< 50		50	µg/Kg-dry	1	GCP	2/16/2009
19. Chlorobenzene	SW8260B	< 50		50	µg/Kg-dry	1	GCP	2/16/2009
20. Chloroethane	SW8260B	< 50		50	µg/Kg-dry	1	GCP	2/16/2009
21. Chloroform	SW8260B	< 50		50	µg/Kg-dry	1	GCP	2/16/2009
22. Chloromethane	SW8260B	< 50		50	µg/Kg-dry	1	GCP	2/16/2009
23. cis-1,2-Dichloroethene	SW8260B	< 50		50	µg/Kg-dry	1	GCP	2/16/2009
24. cis-1,3-Dichloropropene	SW8260B	< 50		50	µg/Kg-dry	1	GCP	2/16/2009
25. Dibromochloromethane	SW8260B	< 50		50	µg/Kg-dry	1	GCP	2/16/2009
26. Ethylbenzene	SW8260B	< 50		50	µg/Kg-dry	1	GCP	2/16/2009
27. m,p-Xylene	SW8260B	< 100		100	µg/Kg-dry	1	GCP	2/16/2009
28. Methyl tert-butyl ether	SW8260B	< 250		250	µg/Kg-dry	1	GCP	2/16/2009
29. Methylene chloride	SW8260B	< 100		100	µg/Kg-dry	1	GCP	2/16/2009
30. o-Xylene	SW8260B	< 50		50	µg/Kg-dry	1	GCP	2/16/2009
31. Tetrachloroethene	SW8260B	< 50		50	µg/Kg-dry	1	GCP	2/16/2009
32. Toluene	SW8260B	< 50		50	µg/Kg-dry	1	GCP	2/16/2009
33. trans-1,2-Dichloroethene	SW8260B	< 50		50	µg/Kg-dry	1	GCP	2/16/2009
34. trans-1,3-Dichloropropene	SW8260B	< 50		50	µg/Kg-dry	1	GCP	2/16/2009
35. Trichloroethene	SW8260B	< 50		50	µg/Kg-dry	1	GCP	2/16/2009
36. Trichlorofluoromethane	SW8260B	< 50.		50	µg/Kg-dry	1	GCP	2/16/2009
37. Vinyl chloride	SW8260B	< 40		40	µg/Kg-dry	1	GCP	2/16/2009

Definitions: PQL - Practical Quantitation Limit
DF - Dilution Factor

Qualifiers (Q): J - Detected below PQL but above MDL: Estimated
S - Spike Recovery Outside Acceptance Limits
B - Analyte detected in associated Method Blank
N - See case narrative for explanation

This report shall not be reproduced except in full, without the written approval of BIO-CHEM Laboratories, Inc.

Note: The sample results reported are based on the sample aliquot(s) tested.

BIO-CHEM Laboratories, Inc.

Date: 2/17/2009

ANALYTICAL REPORT

CLIENT: DeLisle Associates Ltd.
Lab Order: 0902057
Project: Goodwill
Lab Sample ID: 0902057-08A

Project Number: EN08-102
Client Sample ID: EN08-102-43
Collection Date: 2/9/2009
Matrix: AQUEOUS

Analyses	Method Ref.	Result	Q	PQL	Units	DF	Analyst	Date
Volatiles by GC/MS								
1. 1,1,1-Trichloroethane	SW8260B	< 1.0		1.0	µg/L	1	GCP	2/14/2009
2. 1,1,2,2-Tetrachloroethane	SW8260B	< 1.0		1.0	µg/L	1	GCP	2/14/2009
3. 1,1,2-Trichloroethane	SW8260B	< 1.0		1.0	µg/L	1	GCP	2/14/2009
4. 1,1-Dichloroethane	SW8260B	< 1.0		1.0	µg/L	1	GCP	2/14/2009
5. 1,1-Dichloroethene	SW8260B	< 1.0		1.0	µg/L	1	GCP	2/14/2009
6. 1,2,4-Trimethylbenzene	SW8260B	< 1.0		1.0	µg/L	1	GCP	2/14/2009
7. 1,2-Dibromoethane	SW8260B	< 1.0		1.0	µg/L	1	GCP	2/14/2009
8. 1,2-Dichlorobenzene	SW8260B	< 1.0		1.0	µg/L	1	GCP	2/14/2009
9. 1,2-Dichloroethane	SW8260B	< 1.0		1.0	µg/L	1	GCP	2/14/2009
10. 1,2-Dichloropropane	SW8260B	< 1.0		1.0	µg/L	1	GCP	2/14/2009
11. 1,3,5-Trimethylbenzene	SW8260B	< 1.0		1.0	µg/L	1	GCP	2/14/2009
12. 1,3-Dichlorobenzene	SW8260B	< 1.0		1.0	µg/L	1	GCP	2/14/2009
13. 1,4-Dichlorobenzene	SW8260B	< 1.0		1.0	µg/L	1	GCP	2/14/2009
14. Benzene	SW8260B	< 1.0		1.0	µg/L	1	GCP	2/14/2009
15. Bromodichloromethane	SW8260B	< 1.0		1.0	µg/L	1	GCP	2/14/2009
16. Bromoform	SW8260B	< 1.0		1.0	µg/L	1	GCP	2/14/2009
17. Bromomethane	SW8260B	< 1.0		1.0	µg/L	1	GCP	2/14/2009
18. Carbon tetrachloride	SW8260B	< 1.0		1.0	µg/L	1	GCP	2/14/2009
19. Chlorobenzene	SW8260B	< 1.0		1.0	µg/L	1	GCP	2/14/2009
20. Chloroethane	SW8260B	7.6		1.0	µg/L	1	GCP	2/14/2009
21. Chloroform	SW8260B	< 1.0		1.0	µg/L	1	GCP	2/14/2009
22. Chloromethane	SW8260B	< 1.0		1.0	µg/L	1	GCP	2/14/2009
23. cis-1,2-Dichloroethene	SW8260B	4.9		1.0	µg/L	1	GCP	2/14/2009
24. cis-1,3-Dichloropropene	SW8260B	< 1.0		1.0	µg/L	1	GCP	2/14/2009
25. Dibromochloromethane	SW8260B	< 1.0		1.0	µg/L	1	GCP	2/14/2009
26. Ethylbenzene	SW8260B	< 1.0		1.0	µg/L	1	GCP	2/14/2009
27. m,p-Xylene	SW8260B	< 2.0		2.0	µg/L	1	GCP	2/14/2009
28. Methyl tert-butyl ether	SW8260B	< 4.0		4.0	µg/L	1	GCP	2/14/2009
29. Methylene chloride	SW8260B	< 5.0		5.0	µg/L	1	GCP	2/14/2009
30. o-Xylene	SW8260B	< 1.0		1.0	µg/L	1	GCP	2/14/2009
31. Tetrachloroethene	SW8260B	< 1.0		1.0	µg/L	1	GCP	2/14/2009
32. Toluene	SW8260B	< 1.0		1.0	µg/L	1	GCP	2/14/2009
33. trans-1,2-Dichloroethene	SW8260B	< 1.0		1.0	µg/L	1	GCP	2/14/2009
34. trans-1,3-Dichloropropene	SW8260B	< 1.0		1.0	µg/L	1	GCP	2/14/2009
35. Trichloroethene	SW8260B	< 1.0		1.0	µg/L	1	GCP	2/14/2009
36. Trichlorofluoromethane	SW8260B	< 1.0		1.0	µg/L	1	GCP	2/14/2009
37. Vinyl chloride	SW8260B	7.6		1.0	µg/L	1	GCP	2/14/2009

Definitions: PQL - Practical Quantitation Limit
DF - Dilution Factor

Qualifiers (Q): J - Detected below PQL but above MDL: Estimated
S - Spike Recovery Outside Acceptance Limits
B - Analyte detected in associated Method Blank
N - See case narrative for explanation

This report shall not be reproduced except in full, without the written approval of BIO-CHEM Laboratories, Inc.

Note: The sample results reported are based on the sample aliquot(s) tested.

BIO-CHEM Laboratories, Inc.

Date: *2/17/2009*

ANALYTICAL REPORT

CLIENT: DeLisle Associates Ltd.
Lab Order: 0902057
Project: Goodwill
Lab Sample ID: 0902057-09A

Project Number: EN08-102
Client Sample ID: EN08-102-44
Collection Date: 2/9/2009
Matrix: AQUEOUS

Analyses	Method Ref.	Result	Q	PQL	Units	DF	Analyst	Date
Volatiles by GC/MS								
1. 1,1,1-Trichloroethane	SW8260B	< 1.0		1.0	µg/L	1	GCP	2/15/2009
2. 1,1,2,2-Tetrachloroethane	SW8260B	< 1.0		1.0	µg/L	1	GCP	2/15/2009
3. 1,1,2-Trichloroethane	SW8260B	< 1.0		1.0	µg/L	1	GCP	2/15/2009
4. 1,1-Dichloroethane	SW8260B	< 1.0		1.0	µg/L	1	GCP	2/15/2009
5. 1,1-Dichloroethene	SW8260B	< 1.0		1.0	µg/L	1	GCP	2/15/2009
6. 1,2,4-Trimethylbenzene	SW8260B	< 1.0		1.0	µg/L	1	GCP	2/15/2009
7. 1,2-Dibromoethane	SW8260B	< 1.0		1.0	µg/L	1	GCP	2/15/2009
8. 1,2-Dichlorobenzene	SW8260B	< 1.0		1.0	µg/L	1	GCP	2/15/2009
9. 1,2-Dichloroethane	SW8260B	< 1.0		1.0	µg/L	1	GCP	2/15/2009
10. 1,2-Dichloropropane	SW8260B	< 1.0		1.0	µg/L	1	GCP	2/15/2009
11. 1,3,5-Trimethylbenzene	SW8260B	< 1.0		1.0	µg/L	1	GCP	2/15/2009
12. 1,3-Dichlorobenzene	SW8260B	< 1.0		1.0	µg/L	1	GCP	2/15/2009
13. 1,4-Dichlorobenzene	SW8260B	< 1.0		1.0	µg/L	1	GCP	2/15/2009
14. Benzene	SW8260B	< 1.0		1.0	µg/L	1	GCP	2/15/2009
15. Bromodichloromethane	SW8260B	< 1.0		1.0	µg/L	1	GCP	2/15/2009
16. Bromoform	SW8260B	< 1.0		1.0	µg/L	1	GCP	2/15/2009
17. Bromomethane	SW8260B	< 1.0		1.0	µg/L	1	GCP	2/15/2009
18. Carbon tetrachloride	SW8260B	< 1.0		1.0	µg/L	1	GCP	2/15/2009
19. Chlorobenzene	SW8260B	< 1.0		1.0	µg/L	1	GCP	2/15/2009
20. Chloroethane	SW8260B	< 1.0		1.0	µg/L	1	GCP	2/15/2009
21. Chloroform	SW8260B	< 1.0		1.0	µg/L	1	GCP	2/15/2009
22. Chloromethane	SW8260B	< 1.0		1.0	µg/L	1	GCP	2/15/2009
23. cis-1,2-Dichloroethene	SW8260B	< 1.0		1.0	µg/L	1	GCP	2/15/2009
24. cis-1,3-Dichloropropene	SW8260B	< 1.0		1.0	µg/L	1	GCP	2/15/2009
25. Dibromochloromethane	SW8260B	< 1.0		1.0	µg/L	1	GCP	2/15/2009
26. Ethylbenzene	SW8260B	< 1.0		1.0	µg/L	1	GCP	2/15/2009
27. m,p-Xylene	SW8260B	< 2.0		2.0	µg/L	1	GCP	2/15/2009
28. Methyl tert-butyl ether	SW8260B	< 4.0		4.0	µg/L	1	GCP	2/15/2009
29. Methylene chloride	SW8260B	< 5.0		5.0	µg/L	1	GCP	2/15/2009
30. o-Xylene	SW8260B	< 1.0		1.0	µg/L	1	GCP	2/15/2009
31. Tetrachloroethene	SW8260B	< 1.0		1.0	µg/L	1	GCP	2/15/2009
32. Toluene	SW8260B	< 1.0		1.0	µg/L	1	GCP	2/15/2009
33. trans-1,2-Dichloroethene	SW8260B	< 1.0		1.0	µg/L	1	GCP	2/15/2009
34. trans-1,3-Dichloropropene	SW8260B	< 1.0		1.0	µg/L	1	GCP	2/15/2009
35. Trichloroethene	SW8260B	< 1.0		1.0	µg/L	1	GCP	2/15/2009
36. Trichlorofluoromethane	SW8260B	< 1.0		1.0	µg/L	1	GCP	2/15/2009
37. Vinyl chloride	SW8260B	7.5		1.0	µg/L	1	GCP	2/15/2009

Definitions: PQL - Practical Quantitation Limit
DF - Dilution Factor

Qualifiers (Q): J - Detected below PQL but above MDL: Estimated
S - Spike Recovery Outside Acceptance Limits
B - Analyte detected in associated Method Blank
N - See case narrative for explanation

This report shall not be reproduced except in full, without the written approval of BIO-CHEM Laboratories, Inc.

Note: The sample results reported are based on the sample aliquot(s) tested.

BIO-CHEM Laboratories, Inc.

Date: *2/17/2009*

ANALYTICAL REPORT

CLIENT: DeLisle Associates Ltd.
Lab Order: 0902057
Project: Goodwill
Lab Sample ID: 0902057-10A

Project Number: EN08-102
Client Sample ID: EN08-102-45
Collection Date: 2/9/2009
Matrix: AQUEOUS

Analyses	Method Ref.	Result	Q	PQL	Units	DF	Analyst	Date
Volatiles by GC/MS								
1. 1,1,1-Trichloroethane	SW8260B	< 1.0		1.0	µg/L	1	GCP	2/15/2009
2. 1,1,2,2-Tetrachloroethane	SW8260B	< 1.0		1.0	µg/L	1	GCP	2/15/2009
3. 1,1,2-Trichloroethane	SW8260B	< 1.0		1.0	µg/L	1	GCP	2/15/2009
4. 1,1-Dichloroethane	SW8260B	< 1.0		1.0	µg/L	1	GCP	2/15/2009
5. 1,1-Dichloroethene	SW8260B	< 1.0		1.0	µg/L	1	GCP	2/15/2009
6. 1,2,4-Trimethylbenzene	SW8260B	< 1.0		1.0	µg/L	1	GCP	2/15/2009
7. 1,2-Dibromoethane	SW8260B	< 1.0		1.0	µg/L	1	GCP	2/15/2009
8. 1,2-Dichlorobenzene	SW8260B	< 1.0		1.0	µg/L	1	GCP	2/15/2009
9. 1,2-Dichloroethane	SW8260B	< 1.0		1.0	µg/L	1	GCP	2/15/2009
10. 1,2-Dichloropropane	SW8260B	< 1.0		1.0	µg/L	1	GCP	2/15/2009
11. 1,3,5-Trimethylbenzene	SW8260B	< 1.0		1.0	µg/L	1	GCP	2/15/2009
12. 1,3-Dichlorobenzene	SW8260B	< 1.0		1.0	µg/L	1	GCP	2/15/2009
13. 1,4-Dichlorobenzene	SW8260B	< 1.0		1.0	µg/L	1	GCP	2/15/2009
14. Benzene	SW8260B	< 1.0		1.0	µg/L	1	GCP	2/15/2009
15. Bromodichloromethane	SW8260B	< 1.0		1.0	µg/L	1	GCP	2/15/2009
16. Bromoform	SW8260B	< 1.0		1.0	µg/L	1	GCP	2/15/2009
17. Bromomethane	SW8260B	< 1.0		1.0	µg/L	1	GCP	2/15/2009
18. Carbon tetrachloride	SW8260B	< 1.0		1.0	µg/L	1	GCP	2/15/2009
19. Chlorobenzene	SW8260B	< 1.0		1.0	µg/L	1	GCP	2/15/2009
20. Chloroethane	SW8260B	< 1.0		1.0	µg/L	1	GCP	2/15/2009
21. Chloroform	SW8260B	< 1.0		1.0	µg/L	1	GCP	2/15/2009
22. Chloromethane	SW8260B	< 1.0		1.0	µg/L	1	GCP	2/15/2009
23. cis-1,2-Dichloroethene	SW8260B	< 1.0		1.0	µg/L	1	GCP	2/15/2009
24. cis-1,3-Dichloropropene	SW8260B	< 1.0		1.0	µg/L	1	GCP	2/15/2009
25. Dibromochloromethane	SW8260B	< 1.0		1.0	µg/L	1	GCP	2/15/2009
26. Ethylbenzene	SW8260B	< 1.0		1.0	µg/L	1	GCP	2/15/2009
27. m;p-Xylene	SW8260B	< 2.0		2.0	µg/L	1	GCP	2/15/2009
28. Methyl tert-butyl ether	SW8260B	< 4.0		4.0	µg/L	1	GCP	2/15/2009
29. Methylene chloride	SW8260B	< 5.0		5.0	µg/L	1	GCP	2/15/2009
30. o-Xylene	SW8260B	< 1.0		1.0	µg/L	1	GCP	2/15/2009
31. Tetrachloroethene	SW8260B	21		1.0	µg/L	1	GCP	2/15/2009
32. Toluene	SW8260B	< 1.0		1.0	µg/L	1	GCP	2/15/2009
33. trans-1,2-Dichloroethene	SW8260B	< 1.0		1.0	µg/L	1	GCP	2/15/2009
34. trans-1,3-Dichloropropene	SW8260B	< 1.0		1.0	µg/L	1	GCP	2/15/2009
35. Trichloroethene	SW8260B	< 1.0		1.0	µg/L	1	GCP	2/15/2009
36. Trichlorofluoromethane	SW8260B	< 1.0		1.0	µg/L	1	GCP	2/15/2009
37. Vinyl chloride	SW8260B	1.2		1.0	µg/L	1	GCP	2/15/2009

Definitions: PQL - Practical Quantitation Limit
DF - Dilution Factor

Qualifiers (Q): J - Detected below PQL but above MDL: Estimated
S - Spike Recovery Outside Acceptance Limits
B - Analyte detected in associated Method Blank
N - See case narrative for explanation

This report shall not be reproduced except in full, without the written approval of BIO-CHEM Laboratories, Inc.

Note: The sample results reported are based on the sample aliquot(s) tested.

BIO-CHEM Laboratories, Inc.

Date: *2/17/2009*

ANALYTICAL REPORT

CLIENT: DeLisle Associates Ltd.
Lab Order: 0902057
Project: Goodwill
Lab Sample ID: 0902057-11A

Project Number: EN08-102
Client Sample ID: EN08-102-47
Collection Date: 2/9/2009
Matrix: AQUEOUS

Analyses	Method Ref.	Result	Q	PQL	Units	DF	Analyst	Date
Volatiles by GC/MS								
1. 1,1,1-Trichloroethane	SW8260B	< 1.0		1.0	µg/L	1	GCP	2/15/2009
2. 1,1,2,2-Tetrachloroethane	SW8260B	< 1.0		1.0	µg/L	1	GCP	2/15/2009
3. 1,1,2-Trichloroethane	SW8260B	< 1.0		1.0	µg/L	1	GCP	2/15/2009
4. 1,1-Dichloroethane	SW8260B	< 1.0		1.0	µg/L	1	GCP	2/15/2009
5. 1,1-Dichloroethene	SW8260B	< 1.0		1.0	µg/L	1	GCP	2/15/2009
6. 1,2,4-Trimethylbenzene	SW8260B	< 1.0		1.0	µg/L	1	GCP	2/15/2009
7. 1,2-Dibromoethane	SW8260B	< 1.0		1.0	µg/L	1	GCP	2/15/2009
8. 1,2-Dichlorobenzene	SW8260B	< 1.0		1.0	µg/L	1	GCP	2/15/2009
9. 1,2-Dichloroethane	SW8260B	< 1.0		1.0	µg/L	1	GCP	2/15/2009
10. 1,2-Dichloropropane	SW8260B	< 1.0		1.0	µg/L	1	GCP	2/15/2009
11. 1,3,5-Trimethylbenzene	SW8260B	< 1.0		1.0	µg/L	1	GCP	2/15/2009
12. 1,3-Dichlorobenzene	SW8260B	< 1.0		1.0	µg/L	1	GCP	2/15/2009
13. 1,4-Dichlorobenzene	SW8260B	< 1.0		1.0	µg/L	1	GCP	2/15/2009
14. Benzene	SW8260B	< 1.0		1.0	µg/L	1	GCP	2/15/2009
15. Bromodichloromethane	SW8260B	< 1.0		1.0	µg/L	1	GCP	2/15/2009
16. Bromoform	SW8260B	< 1.0		1.0	µg/L	1	GCP	2/15/2009
17. Bromomethane	SW8260B	< 1.0		1.0	µg/L	1	GCP	2/15/2009
18. Carbon tetrachloride	SW8260B	< 1.0		1.0	µg/L	1	GCP	2/15/2009
19. Chlorobenzene	SW8260B	< 1.0		1.0	µg/L	1	GCP	2/15/2009
20. Chloroethane	SW8260B	< 1.0		1.0	µg/L	1	GCP	2/15/2009
21. Chloroform	SW8260B	< 1.0		1.0	µg/L	1	GCP	2/15/2009
22. Chloromethane	SW8260B	< 1.0		1.0	µg/L	1	GCP	2/15/2009
23. cis-1,2-Dichloroethene	SW8260B	21		1.0	µg/L	1	GCP	2/15/2009
24. cis-1,3-Dichloropropene	SW8260B	< 1.0		1.0	µg/L	1	GCP	2/15/2009
25. Dibromochloromethane	SW8260B	< 1.0		1.0	µg/L	1	GCP	2/15/2009
26. Ethylbenzene	SW8260B	< 1.0		1.0	µg/L	1	GCP	2/15/2009
27. m,p-Xylene	SW8260B	< 2.0		2.0	µg/L	1	GCP	2/15/2009
28. Methyl tert-butyl ether	SW8260B	< 4.0		4.0	µg/L	1	GCP	2/15/2009
29. Methylene chloride	SW8260B	< 5.0		5.0	µg/L	1	GCP	2/15/2009
30. o-Xylene	SW8260B	< 1.0		1.0	µg/L	1	GCP	2/15/2009
31. Tetrachloroethene	SW8260B	< 1.0		1.0	µg/L	1	GCP	2/15/2009
32. Toluene	SW8260B	< 1.0		1.0	µg/L	1	GCP	2/15/2009
33. trans-1,2-Dichloroethene	SW8260B	1.6		1.0	µg/L	1	GCP	2/15/2009
34. trans-1,3-Dichloropropene	SW8260B	< 1.0		1.0	µg/L	1	GCP	2/15/2009
35. Trichloroethene	SW8260B	< 1.0		1.0	µg/L	1	GCP	2/15/2009
36. Trichlorofluoromethane	SW8260B	< 1.0		1.0	µg/L	1	GCP	2/15/2009
37. Vinyl chloride	SW8260B	8.5		1.0	µg/L	1	GCP	2/15/2009

Definitions: PQL - Practical Quantitation Limit
DF - Dilution Factor

Qualifiers (Q): J - Detected below PQL but above MDL: Estimated
S - Spike Recovery Outside Acceptance Limits
B - Analyte detected in associated Method Blank
N - See case narrative for explanation

This report shall not be reproduced except in full, without the written approval of BIO-CHEM Laboratories, Inc.

Note: The sample results reported are based on the sample aliquot(s) tested.

BIO-CHEM Laboratories, Inc.

Date: 2/17/2009

ANALYTICAL REPORT

CLIENT: DeLisle Associates Ltd.
Lab Order: 0902057
Project: Goodwill
Lab Sample ID: 0902057-12A

Project Number: EN08-102
Client Sample ID: EN08-102-48
Collection Date: 2/9/2009
Matrix: AQUEOUS

Analyses	Method Ref.	Result	Q	PQL	Units	DF	Analyst	Date
Volatiles by GC/MS								
1. 1,1,1-Trichloroethane	SW8260B	< 1.0		1.0	µg/L	1	GCP	2/16/2009
2. 1,1,2,2-Tetrachloroethane	SW8260B	< 1.0		1.0	µg/L	1	GCP	2/16/2009
3. 1,1,2-Trichloroethane	SW8260B	< 1.0		1.0	µg/L	1	GCP	2/16/2009
4. 1,1-Dichloroethane	SW8260B	< 1.0		1.0	µg/L	1	GCP	2/16/2009
5. 1,1-Dichloroethene	SW8260B	< 1.0		1.0	µg/L	1	GCP	2/16/2009
6. 1,2,4-Trimethylbenzene	SW8260B	< 1.0		1.0	µg/L	1	GCP	2/16/2009
7. 1,2-Dibromoethane	SW8260B	< 1.0		1.0	µg/L	1	GCP	2/16/2009
8. 1,2-Dichlorobenzene	SW8260B	< 1.0		1.0	µg/L	1	GCP	2/16/2009
9. 1,2-Dichloroethane	SW8260B	< 1.0		1.0	µg/L	1	GCP	2/16/2009
10. 1,2-Dichloropropane	SW8260B	< 1.0		1.0	µg/L	1	GCP	2/16/2009
11. 1,3,5-Trimethylbenzene	SW8260B	< 1.0		1.0	µg/L	1	GCP	2/16/2009
12. 1,3-Dichlorobenzene	SW8260B	< 1.0		1.0	µg/L	1	GCP	2/16/2009
13. 1,4-Dichlorobenzene	SW8260B	< 1.0		1.0	µg/L	1	GCP	2/16/2009
14. Benzene	SW8260B	< 1.0		1.0	µg/L	1	GCP	2/16/2009
15. Bromodichloromethane	SW8260B	< 1.0		1.0	µg/L	1	GCP	2/16/2009
16. Bromoform	SW8260B	< 1.0		1.0	µg/L	1	GCP	2/16/2009
17. Bromomethane	SW8260B	< 1.0		1.0	µg/L	1	GCP	2/16/2009
18. Carbon tetrachloride	SW8260B	< 1.0		1.0	µg/L	1	GCP	2/16/2009
19. Chlorobenzene	SW8260B	< 1.0		1.0	µg/L	1	GCP	2/16/2009
20. Chloroethane	SW8260B	< 1.0		1.0	µg/L	1	GCP	2/16/2009
21. Chloroform	SW8260B	< 1.0		1.0	µg/L	1	GCP	2/16/2009
22. Chloromethane	SW8260B	< 1.0		1.0	µg/L	1	GCP	2/16/2009
23. cis-1,2-Dichloroethene	SW8260B	< 1.0		1.0	µg/L	1	GCP	2/16/2009
24. cis-1,3-Dichloropropene	SW8260B	< 1.0		1.0	µg/L	1	GCP	2/16/2009
25. Dibromochloromethane	SW8260B	< 1.0		1.0	µg/L	1	GCP	2/16/2009
26. Ethylbenzene	SW8260B	< 1.0		1.0	µg/L	1	GCP	2/16/2009
27. m,p-Xylene	SW8260B	< 2.0		2.0	µg/L	1	GCP	2/16/2009
28. Methyl tert-butyl ether	SW8260B	< 4.0		4.0	µg/L	1	GCP	2/16/2009
29. Methylene chloride	SW8260B	< 5.0		5.0	µg/L	1	GCP	2/16/2009
30. o-Xylene	SW8260B	< 1.0		1.0	µg/L	1	GCP	2/16/2009
31. Tetrachloroethene	SW8260B	< 1.0		1.0	µg/L	1	GCP	2/16/2009
32. Toluene	SW8260B	< 1.0		1.0	µg/L	1	GCP	2/16/2009
33. trans-1,2-Dichloroethene	SW8260B	< 1.0		1.0	µg/L	1	GCP	2/16/2009
34. trans-1,3-Dichloropropene	SW8260B	< 1.0		1.0	µg/L	1	GCP	2/16/2009
35. Trichloroethene	SW8260B	< 1.0		1.0	µg/L	1	GCP	2/16/2009
36. Trichlorofluoromethane	SW8260B	< 1.0		1.0	µg/L	1	GCP	2/16/2009
37. Vinyl chloride	SW8260B	8.0		1.0	µg/L	1	GCP	2/16/2009

Definitions: PQL - Practical Quantitation Limit
DF - Dilution Factor

Qualifiers (Q): J - Detected below PQL but above MDL: Estimated
S - Spike Recovery Outside Acceptance Limits
B - Analyte detected in associated Method Blank
N - See case narrative for explanation

This report shall not be reproduced except in full, without the written approval of BIO-CHEM Laboratories, Inc.

Note: The sample results reported are based on the sample aliquot(s) tested.

BIO-CHEM Laboratories, Inc.

Date: *2/17/2009*

ANALYTICAL REPORT

CLIENT:	DeLisle Associates Ltd.	**Project Number:**	EN08-102
Lab Order:	0902057	**Client Sample ID:**	EN08-102-49
Project:	Goodwill	**Collection Date:**	2/9/2009
Lab Sample ID:	0902057-13A	**Matrix:**	AQUEOUS

Analyses	Method Ref.	Result	Q	PQL	Units	DF	Analyst	Date
Volatiles by GC/MS								
1. 1,1,1-Trichloroethane	SW8260B	< 1.0		1.0	µg/L	1	GCP	2/16/2009
2. 1,1,2,2-Tetrachloroethane	SW8260B	< 1.0		1.0	µg/L	1	GCP	2/16/2009
3. 1,1,2-Trichloroethane	SW8260B	< 1.0		1.0	µg/L	1	GCP	2/16/2009
4. 1,1-Dichloroethane	SW8260B	< 1.0		1.0	µg/L	1	GCP	2/16/2009
5. 1,1-Dichloroethene	SW8260B	< 1.0		1.0	µg/L	1	GCP	2/16/2009
6. 1,2,4-Trimethylbenzene	SW8260B	< 1.0		1.0	µg/L	1	GCP	2/16/2009
7. 1,2-Dibromoethane	SW8260B	< 1.0		1.0	µg/L	1	GCP	2/16/2009
8. 1,2-Dichlorobenzene	SW8260B	< 1.0		1.0	µg/L	1	GCP	2/16/2009
9. 1,2-Dichloroethane	SW8260B	< 1.0		1.0	µg/L	1	GCP	2/16/2009
10. 1,2-Dichloropropane	SW8260B	< 1.0		1.0	µg/L	1	GCP	2/16/2009
11. 1,3,5-Trimethylbenzene	SW8260B	< 1.0		1.0	µg/L	1	GCP	2/16/2009
12. 1,3-Dichlorobenzene	SW8260B	< 1.0		1.0	µg/L	1	GCP	2/16/2009
13. 1,4-Dichlorobenzene	SW8260B	< 1.0		1.0	µg/L	1	GCP	2/16/2009
14. Benzene	SW8260B	< 1.0		1.0	µg/L	1	GCP	2/16/2009
15. Bromodichloromethane	SW8260B	< 1.0		1.0	µg/L	1	GCP	2/16/2009
16. Bromoform	SW8260B	< 1.0		1.0	µg/L	1	GCP	2/16/2009
17. Bromomethane	SW8260B	< 1.0		1.0	µg/L	1	GCP	2/16/2009
18. Carbon tetrachloride	SW8260B	< 1.0		1.0	µg/L	1	GCP	2/16/2009
19. Chlorobenzene	SW8260B	< 1.0		1.0	µg/L	1	GCP	2/16/2009
20. Chloroethane	SW8260B	< 1.0		1.0	µg/L	1	GCP	2/16/2009
21. Chloroform	SW8260B	< 1.0		1.0	µg/L	1	GCP	2/16/2009
22. Chloromethane	SW8260B	< 1.0		1.0	µg/L	1	GCP	2/16/2009
23. cis-1,2-Dichloroethene	SW8260B	7.7		1.0	µg/L	1	GCP	2/16/2009
24. cis-1,3-Dichloropropene	SW8260B	< 1.0		1.0	µg/L	1	GCP	2/16/2009
25. Dibromochloromethane	SW8260B	< 1.0		1.0	µg/L	1	GCP	2/16/2009
26. Ethylbenzene	SW8260B	< 1.0		1.0	µg/L	1	GCP	2/16/2009
27. m,p-Xylene	SW8260B	< 2.0		2.0	µg/L	1	GCP	2/16/2009
28. Methyl tert-butyl ether	SW8260B	< 4.0		4.0	µg/L	1	GCP	2/16/2009
29. Methylene chloride	SW8260B	< 5.0		5.0	µg/L	1	GCP	2/16/2009
30. o-Xylene	SW8260B	< 1.0		1.0	µg/L	1	GCP	2/16/2009
31. Tetrachloroethene	SW8260B	200		1.0	µg/L	1	GCP	2/16/2009
32. Toluene	SW8260B	< 1.0		1.0	µg/L	1	GCP	2/16/2009
33. trans-1,2-Dichloroethene	SW8260B	< 1.0		1.0	µg/L	1	GCP	2/16/2009
34. trans-1,3-Dichloropropene	SW8260B	< 1.0		1.0	µg/L	1	GCP	2/16/2009
35. Trichloroethene	SW8260B	2.8		1.0	µg/L	1	GCP	2/16/2009
36. Trichlorofluoromethane	SW8260B	< 1.0		1.0	µg/L	1	GCP	2/16/2009
37. Vinyl chloride	SW8260B	< 1.0		1.0	µg/L	1	GCP	2/16/2009

Definitions: PQL - Practical Quantitation Limit
DF - Dilution Factor

Qualifiers (Q): J - Detected below PQL but above MDL: Estimated
S - Spike Recovery Outside Acceptance Limits
B - Analyte detected in associated Method Blank
N - See case narrative for explanation

This report shall not be reproduced except in full, without the written approval of BIO-CHEM Laboratories, Inc.

Note: The sample results reported are based on the sample aliquot(s) tested.

BIO-CHEM Laboratories, Inc.

Date: 2/17/2009

ANALYTICAL REPORT

CLIENT: DeLisle Associates Ltd.
Lab Order: 0902057
Project: Goodwill
Lab Sample ID: 0902057-14A

Project Number: EN08-102
Client Sample ID: EN08-102-51
Collection Date: 2/9/2009
Matrix: AQUEOUS

Analyses	Method Ref.	Result	Q	PQL	Units	DF	Analyst	Date
Volatiles by GC/MS								
1. 1,1,1-Trichloroethane	SW8260B	< 1.0		1.0	µg/L	1	GCP	2/16/2009
2. 1,1,2,2-Tetrachloroethane	SW8260B	< 1.0		1.0	µg/L	1	GCP	2/16/2009
3. 1,1,2-Trichloroethane	SW8260B	< 1.0		1.0	µg/L	1	GCP	2/16/2009
4. 1,1-Dichloroethane	SW8260B	< 1.0		1.0	µg/L	1	GCP	2/16/2009
5. 1,1-Dichloroethene	SW8260B	< 1.0		1.0	µg/L	1	GCP	2/16/2009
6. 1,2,4-Trimethylbenzene	SW8260B	< 1.0		1.0	µg/L	1	GCP	2/16/2009
7. 1,2-Dibromoethane	SW8260B	< 1.0		1.0	µg/L	1	GCP	2/16/2009
8. 1,2-Dichlorobenzene	SW8260B	< 1.0		1.0	µg/L	1	GCP	2/16/2009
9. 1,2-Dichloroethane	SW8260B	< 1.0		1.0	µg/L	1	GCP	2/16/2009
10. 1,2-Dichloropropane	SW8260B	< 1.0		1.0	µg/L	1	GCP	2/16/2009
11. 1,3,5-Trimethylbenzene	SW8260B	< 1.0		1.0	µg/L	1	GCP	2/16/2009
12. 1,3-Dichlorobenzene	SW8260B	< 1.0		1.0	µg/L	1	GCP	2/16/2009
13. 1,4-Dichlorobenzene	SW8260B	< 1.0		1.0	µg/L	1	GCP	2/16/2009
14. Benzene	SW8260B	< 1.0		1.0	µg/L	1	GCP	2/16/2009
15. Bromodichloromethane	SW8260B	< 1.0		1.0	µg/L	1	GCP	2/16/2009
16. Bromoform	SW8260B	< 1.0		1.0	µg/L	1	GCP	2/16/2009
17. Bromomethane	SW8260B	< 1.0		1.0	µg/L	1	GCP	2/16/2009
18. Carbon tetrachloride	SW8260B	< 1.0		1.0	µg/L	1	GCP	2/16/2009
19. Chlorobenzene	SW8260B	< 1.0		1.0	µg/L	1	GCP	2/16/2009
20. Chloroethane	SW8260B	< 1.0		1.0	µg/L	1	GCP	2/16/2009
21. Chloroform	SW8260B	< 1.0		1.0	µg/L	1	GCP	2/16/2009
22. Chloromethane	SW8260B	< 1.0		1.0	µg/L	1	GCP	2/16/2009
23. cis-1,2-Dichloroethene	SW8260B	7.2		1.0	µg/L	1	GCP	2/16/2009
24. cis-1,3-Dichloropropene	SW8260B	< 1.0		1.0	µg/L	1	GCP	2/16/2009
25. Dibromochloromethane	SW8260B	< 1.0		1.0	µg/L	1	GCP	2/16/2009
26. Ethylbenzene	SW8260B	< 1.0		1.0	µg/L	1	GCP	2/16/2009
27. m,p-Xylene	SW8260B	< 2.0		2.0	µg/L	1	GCP	2/16/2009
28. Methyl tert-butyl ether	SW8260B	< 4.0		4.0	µg/L	1	GCP	2/16/2009
29. Methylene chloride	SW8260B	< 5.0		5.0	µg/L	1	GCP	2/16/2009
30. o-Xylene	SW8260B	< 1.0		1.0	µg/L	1	GCP	2/16/2009
31. Tetrachloroethene	SW8260B	1.3		1.0	µg/L	1	GCP	2/16/2009
32. Toluene	SW8260B	< 1.0		1.0	µg/L	1	GCP	2/16/2009
33. trans-1,2-Dichloroethene	SW8260B	< 1.0		1.0	µg/L	1	GCP	2/16/2009
34. trans-1,3-Dichloropropene	SW8260B	< 1.0		1.0	µg/L	1	GCP	2/16/2009
35. Trichloroethene	SW8260B	< 1.0		1.0	µg/L	1	GCP	2/16/2009
36. Trichlorofluoromethane	SW8260B	< 1.0		1.0	µg/L	1	GCP	2/16/2009
37. Vinyl chloride	SW8260B	3.2		1.0	µg/L	1	GCP	2/16/2009

Definitions: PQL - Practical Quantitation Limit
DF - Dilution Factor

Qualifiers (Q): J - Detected below PQL but above MDL: Estimated
S - Spike Recovery Outside Acceptance Limits
B - Analyte detected in associated Method Blank
N - See case narrative for explanation

This report shall not be reproduced except in full, without the written approval of BIO-CHEM Laboratories, Inc.

Note: The sample results reported are based on the sample aliquot(s) tested.

BIO-CHEM Laboratories, Inc.

Date: *2/17/2009*

ANALYTICAL REPORT

CLIENT:	DeLisle Associates Ltd.	**Project Number:**	EN08-102
Lab Order:	0902057	**Client Sample ID:**	EN08-102-52
Project:	Goodwill	**Collection Date:**	2/9/2009
Lab Sample ID:	0902057-15A	**Matrix:**	AQUEOUS

Analyses	Method Ref.	Result	Q	PQL	Units	DF	Analyst	Date
Volatiles by GC/MS								
1. 1,1,1-Trichloroethane	SW8260B	< 1.0		1.0	µg/L	1	GCP	2/16/2009
2. 1,1,2,2-Tetrachloroethane	SW8260B	< 1.0		1.0	µg/L	1	GCP	2/16/2009
3. 1,1,2-Trichloroethane	SW8260B	< 1.0		1.0	µg/L	1	GCP	2/16/2009
4. 1-Dichloroethane	SW8260B	< 1.0		1.0	µg/L	1	GCP	2/16/2009
5. 1-Dichloroethene	SW8260B	< 1.0		1.0	µg/L	1	GCP	2/16/2009
6. 2,4-Trimethylbenzene	SW8260B	< 1.0		1.0	µg/L	1	GCP	2/16/2009
7. 2-Dibromoethane	SW8260B	< 1.0		1.0	µg/L	1	GCP	2/16/2009
8. 2-Dichlorobenzene	SW8260B	< 1.0		1.0	µg/L	1	GCP	2/16/2009
9. 2-Dichloroethane	SW8260B	< 1.0		1.0	µg/L	1	GCP	2/16/2009
10. 2-Dichloropropane	SW8260B	< 1.0		1.0	µg/L	1	GCP	2/16/2009
11. 3,5-Trimethylbenzene	SW8260B	< 1.0		1.0	µg/L	1	GCP	2/16/2009
12. 3-Dichlorobenzene	SW8260B	< 1.0		1.0	µg/L	1	GCP	2/16/2009
13. 1,4-Dichlorobenzene	SW8260B	< 1.0		1.0	µg/L	1	GCP	2/16/2009
14. Benzene	SW8260B	< 1.0		1.0	µg/L	1	GCP	2/16/2009
15. Bromodichloromethane	SW8260B	< 1.0		1.0	µg/L	1	GCP	2/16/2009
16. Bromoform	SW8260B	< 1.0		1.0	µg/L	1	GCP	2/16/2009
17. Bromomethane	SW8260B	< 1.0		1.0	µg/L	1	GCP	2/16/2009
18. Carbon tetrachloride	SW8260B	< 1.0		1.0	µg/L	1	GCP	2/16/2009
19. Chlorobenzene	SW8260B	< 1.0		1.0	µg/L	1	GCP	2/16/2009
20. Chloroethane	SW8260B	< 1.0		1.0	µg/L	1	GCP	2/16/2009
21. Chloroform	SW8260B	< 1.0		1.0	µg/L	1	GCP	2/16/2009
22. Chloromethane	SW8260B	< 1.0		1.0	µg/L	1	GCP	2/16/2009
23. cis-1,2-Dichloroethene	SW8260B	< 1.0		1.0	µg/L	1	GCP	2/16/2009
24. cis-1,3-Dichloropropene	SW8260B	< 1.0		1.0	µg/L	1	GCP	2/16/2009
25. Dibromochloromethane	SW8260B	< 1.0		1.0	µg/L	1	GCP	2/16/2009
26. Ethylbenzene	SW8260B	< 1.0		1.0	µg/L	1	GCP	2/16/2009
27. m,p-Xylene	SW8260B	< 2.0		2.0	µg/L	1	GCP	2/16/2009
28. Methyl tert-butyl ether	SW8260B	< 4.0		4.0	µg/L	1	GCP	2/16/2009
29. Methylene chloride	SW8260B	< 5.0		5.0	µg/L	1	GCP	2/16/2009
30. o-Xylene	SW8260B	< 1.0		1.0	µg/L	1	GCP	2/16/2009
31. Tetrachloroethene	SW8260B	15		1.0	µg/L	1	GCP	2/16/2009
32. Toluene	SW8260B	< 1.0		1.0	µg/L	1	GCP	2/16/2009
33. trans-1,2-Dichloroethene	SW8260B	< 1.0		1.0	µg/L	1	GCP	2/16/2009
34. trans-1,3-Dichloropropene	SW8260B	< 1.0		1.0	µg/L	1	GCP	2/16/2009
35. Trichloroethene	SW8260B	< 1.0		1.0	µg/L	1	GCP	2/16/2009
36. Trichlorofluoromethane	SW8260B	< 1.0		1.0	µg/L	1	GCP	2/16/2009
37. Vinyl chloride	SW8260B	4.2		1.0	µg/L	1	GCP	2/16/2009

Definitions: PQL - Practical Quantitation Limit
DF - Dilution Factor

Qualifiers (Q): J - Detected below PQL but above MDL: Estimated
S - Spike Recovery Outside Acceptance Limits
B - Analyte detected in associated Method Blank
N - See case narrative for explanation

This report shall not be reproduced except in full, without the written approval of BIO-CHEM Laboratories, Inc.

Note: The sample results reported are based on the sample aliquot(s) tested.

BIO-CHEM Laboratories, Inc.

Date: *2/17/2009*

ANALYTICAL REPORT

CLIENT:	DeLisle Associates Ltd.	Project Number:	EN08-102
Lab Order:	0902057	Client Sample ID:	EN08-102-54
Project:	Goodwill	Collection Date:	2/9/2009
Lab Sample ID:	0902057-16A	Matrix:	AQUEOUS

Analyses	Method Ref.	Result	Q	PQL	Units	DF	Analyst	Date
Volatiles by GC/MS								
1. 1,1,1-Trichloroethane	SW8260B	< 1.0		1.0	µg/L	1	GCP	2/16/2009
2. 1,1,2,2-Tetrachloroethane	SW8260B	< 1.0		1.0	µg/L	1	GCP	2/16/2009
3. 1,1,2-Trichloroethane	SW8260B	< 1.0		1.0	µg/L	1	GCP	2/16/2009
4. 1,1-Dichloroethane	SW8260B	< 1.0		1.0	µg/L	1	GCP	2/16/2009
5. 1,1-Dichloroethene	SW8260B	< 1.0		1.0	µg/L	1	GCP	2/16/2009
6. 1,2,4-Trimethylbenzene	SW8260B	< 1.0		1.0	µg/L	1	GCP	2/16/2009
7. 1,2-Dibromoethane	SW8260B	< 1.0		1.0	µg/L	1	GCP	2/16/2009
8. 1,2-Dichlorobenzene	SW8260B	< 1.0		1.0	µg/L	1	GCP	2/16/2009
9. 1,2-Dichloroethane	SW8260B	< 1.0		1.0	µg/L	1	GCP	2/16/2009
10. 1,2-Dichloropropane	SW8260B	< 1.0		1.0	µg/L	1	GCP	2/16/2009
11. 1,3,5-Trimethylbenzene	SW8260B	< 1.0		1.0	µg/L	1	GCP	2/16/2009
12. 1,3-Dichlorobenzene	SW8260B	< 1.0		1.0	µg/L	1	GCP	2/16/2009
13. 1,4-Dichlorobenzene	SW8260B	< 1.0		1.0	µg/L	1	GCP	2/16/2009
14. Benzene	SW8260B	< 1.0		1.0	µg/L	1	GCP	2/16/2009
15. Bromodichloromethane	SW8260B	< 1.0		1.0	µg/L	1	GCP	2/16/2009
16. Bromoform	SW8260B	< 1.0		1.0	µg/L	1	GCP	2/16/2009
17. Bromomethane	SW8260B	< 1.0		1.0	µg/L	1	GCP	2/16/2009
18. Carbon tetrachloride	SW8260B	< 1.0		1.0	µg/L	1	GCP	2/16/2009
19. Chlorobenzene	SW8260B	< 1.0		1.0	µg/L	1	GCP	2/16/2009
20. Chloroethane	SW8260B	< 1.0		1.0	µg/L	1	GCP	2/16/2009
21. Chloroform	SW8260B	< 1.0		1.0	µg/L	1	GCP	2/16/2009
22. Chloromethane	SW8260B	< 1.0		1.0	µg/L	1	GCP	2/16/2009
23. cis-1,2-Dichloroethene	SW8260B	< 1.0		1.0	µg/L	1	GCP	2/16/2009
24. cis-1,3-Dichloropropene	SW8260B	< 1.0		1.0	µg/L	1	GCP	2/16/2009
25. Dibromochloromethane	SW8260B	< 1.0		1.0	µg/L	1	GCP	2/16/2009
26. Ethylbenzene	SW8260B	< 1.0		1.0	µg/L	1	GCP	2/16/2009
27. m,p-Xylene	SW8260B	< 2.0		2.0	µg/L	1	GCP	2/16/2009
28. Methyl tert-butyl ether	SW8260B	< 4.0		4.0	µg/L	1	GCP	2/16/2009
29. Methylene chloride	SW8260B	< 5.0		5.0	µg/L	1	GCP	2/16/2009
30. o-Xylene	SW8260B	< 1.0		1.0	µg/L	1	GCP	2/16/2009
31. Tetrachloroethene	SW8260B	< 1.0		1.0	µg/L	1	GCP	2/16/2009
32. Toluene	SW8260B	< 1.0		1.0	µg/L	1	GCP	2/16/2009
33. trans-1,2-Dichloroethene	SW8260B	< 1.0		1.0	µg/L	1	GCP	2/16/2009
34. trans-1,3-Dichloropropene	SW8260B	< 1.0		1.0	µg/L	1	GCP	2/16/2009
35. Trichloroethene	SW8260B	< 1.0		1.0	µg/L	1	GCP	2/16/2009
36. Trichlorofluoromethane	SW8260B	< 1.0		1.0	µg/L	1	GCP	2/16/2009
37. Vinyl chloride	SW8260B	3.9		1.0	µg/L	1	GCP	2/16/2009

Definitions: PQL - Practical Quantitation Limit
DF - Dilution Factor

Qualifiers (Q): J - Detected below PQL but above MDL: Estimated
S - Spike Recovery Outside Acceptance Limits
B - Analyte detected in associated Method Blank
N - See case narrative for explanation

This report shall not be reproduced except in full, without the written approval of BIO-CHEM Laboratories, Inc.

Note: The sample results reported are based on the sample aliquot(s) tested.

BIO-CHEM Laboratories, Inc.

Date: *2/17/2009*

ANALYTICAL REPORT

CLIENT:	DeLisle Associates Ltd.	**Project Number:**	EN08-102
Lab Order:	0902057	**Client Sample ID:**	EN08-102-55
Project:	Goodwill	**Collection Date:**	2/9/2009
Lab Sample ID:	0902057-17A	**Matrix:**	AQUEOUS

Analyses	Method Ref.	Result	Q	PQL	Units	DF	Analyst	Date
Volatiles by GC/MS								
1. 1,1,1-Trichloroethane	SW8260B	< 1.0		1.0	µg/L	1	GCP	2/16/2009
2. 1,1,2,2-Tetrachloroethane	SW8260B	< 1.0		1.0	µg/L	1	GCP	2/16/2009
3. 1,1,2-Trichloroethane	SW8260B	< 1.0		1.0	µg/L	1	GCP	2/16/2009
4. 1,1-Dichloroethane	SW8260B	< 1.0		1.0	µg/L	1	GCP	2/16/2009
5. 1,1-Dichloroethene	SW8260B	< 1.0		1.0	µg/L	1	GCP	2/16/2009
6. 1,2,4-Trimethylbenzene	SW8260B	< 1.0		1.0	µg/L	1	GCP	2/16/2009
7. 1,2-Dibromoethane	SW8260B	< 1.0		1.0	µg/L	1	GCP	2/16/2009
8. 1,2-Dichlorobenzene	SW8260B	< 1.0		1.0	µg/L	1	GCP	2/16/2009
9. 1,2-Dichloroethane	SW8260B	< 1.0		1.0	µg/L	1	GCP	2/16/2009
10. 1,2-Dichloropropane	SW8260B	< 1.0		1.0	µg/L	1	GCP	2/16/2009
11. 1,3,5-Trimethylbenzene	SW8260B	< 1.0		1.0	µg/L	1	GCP	2/16/2009
12. 1,3-Dichlorobenzene	SW8260B	< 1.0		1.0	µg/L	1	GCP	2/16/2009
13. 1,4-Dichlorobenzene	SW8260B	< 1.0		1.0	µg/L	1	GCP	2/16/2009
14. Benzene	SW8260B	< 1.0		1.0	µg/L	1	GCP	2/16/2009
15. Bromodichloromethane	SW8260B	< 1.0		1.0	µg/L	1	GCP	2/16/2009
16. Bromoform	SW8260B	< 1.0		1.0	µg/L	1	GCP	2/16/2009
17. Bromomethane	SW8260B	< 1.0		1.0	µg/L	1	GCP	2/16/2009
18. Carbon tetrachloride	SW8260B	< 1.0		1.0	µg/L	1	GCP	2/16/2009
19. Chlorobenzene	SW8260B	< 1.0		1.0	µg/L	1	GCP	2/16/2009
20. Chloroethane	SW8260B	< 1.0		1.0	µg/L	1	GCP	2/16/2009
21. Chloroform	SW8260B	< 1.0		1.0	µg/L	1	GCP	2/16/2009
22. Chloromethane	SW8260B	< 1.0		1.0	µg/L	1	GCP	2/16/2009
23. cis-1,2-Dichloroethene	SW8260B	< 1.0		1.0	µg/L	1	GCP	2/16/2009
24. cis-1,3-Dichloropropene	SW8260B	< 1.0		1.0	µg/L	1	GCP	2/16/2009
25. Dibromochloromethane	SW8260B	< 1.0		1.0	µg/L	1	GCP	2/16/2009
26. Ethylbenzene	SW8260B	< 1.0		1.0	µg/L	1	GCP	2/16/2009
27. m,p-Xylene	SW8260B	< 2.0		2.0	µg/L	1	GCP	2/16/2009
28. Methyl tert-butyl ether	SW8260B	< 4.0		4.0	µg/L	1	GCP	2/16/2009
29. Methylene chloride	SW8260B	< 5.0		5.0	µg/L	1	GCP	2/16/2009
30. o-Xylene	SW8260B	< 1.0		1.0	µg/L	1	GCP	2/16/2009
31. Tetrachloroethene	SW8260B	< 1.0		1.0	µg/L	1	GCP	2/16/2009
32. Toluene	SW8260B	< 1.0		1.0	µg/L	1	GCP	2/16/2009
33. trans-1,2-Dichloroethene	SW8260B	< 1.0		1.0	µg/L	1	GCP	2/16/2009
34. trans-1,3-Dichloropropene	SW8260B	< 1.0		1.0	µg/L	1	GCP	2/16/2009
35. Trichloroethene	SW8260B	< 1.0		1.0	µg/L	1	GCP	2/16/2009
36. Trichlorofluoromethane	SW8260B	< 1.0		1.0	µg/L	1	GCP	2/16/2009
37. Vinyl chloride	SW8260B	5.2		1.0	µg/L	1	GCP	2/16/2009

Definitions: PQL - Practical Quantitation Limit
DF - Dilution Factor

Qualifiers (Q): J - Detected below PQL but above MDL: Estimated
S - Spike Recovery Outside Acceptance Limits
B - Analyte detected in associated Method Blank
N - See case narrative for explanation

This report shall not be reproduced except in full, without the written approval of BIO-CHEM Laboratories, Inc.

Note: The sample results reported are based on the sample aliquot(s) tested.

BIO-CHEM Laboratories, Inc.

Date: 2/17/2009

ANALYTICAL REPORT

CLIENT:	DeLisle Associates Ltd.	Project Number:	EN08-102
Lab Order:	0902057	Client Sample ID:	EN08-102-56
Project:	Goodwill	Collection Date:	2/9/2009
Lab Sample ID:	0902057-18A	Matrix:	AQUEOUS

Analyses	Method Ref.	Result	Q	PQL	Units	DF	Analyst	Date
Volatiles by GC/MS								
1. 1,1,1-Trichloroethane	SW8260B	< 1.0		1.0	µg/L	1	GCP	2/16/2009
2. 1,1,2,2-Tetrachloroethane	SW8260B	< 1.0		1.0	µg/L	1	GCP	2/16/2009
3. 1,1,2-Trichloroethane	SW8260B	< 1.0		1.0	µg/L	1	GCP	2/16/2009
4. 1,1-Dichloroethane	SW8260B	< 1.0		1.0	µg/L	1	GCP	2/16/2009
5. 1,1-Dichloroethene	SW8260B	< 1.0		1.0	µg/L	1	GCP	2/16/2009
6. 1,2,4-Trimethylbenzene	SW8260B	< 1.0		1.0	µg/L	1	GCP	2/16/2009
7. 1,2-Dibromoethane	SW8260B	< 1.0		1.0	µg/L	1	GCP	2/16/2009
8. 1,2-Dichlorobenzene	SW8260B	< 1.0		1.0	µg/L	1	GCP	2/16/2009
9. 1,2-Dichloroethane	SW8260B	< 1.0		1.0	µg/L	1	GCP	2/16/2009
10. 1,2-Dichloropropane	SW8260B	< 1.0		1.0	µg/L	1	GCP	2/16/2009
11. 1,3,5-Trimethylbenzene	SW8260B	< 1.0		1.0	µg/L	1	GCP	2/16/2009
12. 1,3-Dichlorobenzene	SW8260B	< 1.0		1.0	µg/L	1	GCP	2/16/2009
13. 1,4-Dichlorobenzene	SW8260B	< 1.0		1.0	µg/L	1	GCP	2/16/2009
14. Benzene	SW8260B	< 1.0		1.0	µg/L	1	GCP	2/16/2009
15. Bromodichloromethane	SW8260B	< 1.0		1.0	µg/L	1	GCP	2/16/2009
16. Bromoform	SW8260B	< 1.0		1.0	µg/L	1	GCP	2/16/2009
17. Bromomethane	SW8260B	< 1.0		1.0	µg/L	1	GCP	2/16/2009
18. Carbon tetrachloride	SW8260B	< 1.0		1.0	µg/L	1	GCP	2/16/2009
19. Chlorobenzene	SW8260B	< 1.0		1.0	µg/L	1	GCP	2/16/2009
20. Chloroethane	SW8260B	< 1.0		1.0	µg/L	1	GCP	2/16/2009
21. Chloroform	SW8260B	< 1.0		1.0	µg/L	1	GCP	2/16/2009
22. Chloromethane	SW8260B	< 1.0		1.0	µg/L	1	GCP	2/16/2009
23. cis-1,2-Dichloroethene	SW8260B	< 1.0		1.0	µg/L	1	GCP	2/16/2009
24. cis-1,3-Dichloropropene	SW8260B	< 1.0		1.0	µg/L	1	GCP	2/16/2009
25. Dibromochloromethane	SW8260B	< 1.0		1.0	µg/L	1	GCP	2/16/2009
26. Ethylbenzene	SW8260B	< 1.0		1.0	µg/L	1	GCP	2/16/2009
27. m,p-Xylene	SW8260B	< 2.0		2.0	µg/L	1	GCP	2/16/2009
28. Methyl tert-butyl ether	SW8260B	< 4.0		4.0	µg/L	1	GCP	2/16/2009
29. Methylene chloride	SW8260B	< 5.0		5.0	µg/L	1	GCP	2/16/2009
30. o-Xylene	SW8260B	< 1.0		1.0	µg/L	1	GCP	2/16/2009
31. Tetrachloroethene	SW8260B	< 1.0		1.0	µg/L	1	GCP	2/16/2009
32. Toluene	SW8260B	< 1.0		1.0	µg/L	1	GCP	2/16/2009
33. trans-1,2-Dichloroethene	SW8260B	< 1.0		1.0	µg/L	1	GCP	2/16/2009
34. trans-1,3-Dichloropropene	SW8260B	< 1.0		1.0	µg/L	1	GCP	2/16/2009
35. Trichloroethene	SW8260B	< 1.0		1.0	µg/L	1	GCP	2/16/2009
36. Trichlorofluoromethane	SW8260B	< 1.0		1.0	µg/L	1	GCP	2/16/2009
37. Vinyl chloride	SW8260B	2.4		1.0	µg/L	1	GCP	2/16/2009

Definitions: PQL - Practical Quantitation Limit
DF - Dilution Factor

Qualifiers (Q): J - Detected below PQL but above MDL: Estimated
S - Spike Recovery Outside Acceptance Limits
B - Analyte detected in associated Method Blank
N - See case narrative for explanation

This report shall not be reproduced except in full, without the written approval of BIO-CHEM Laboratories, Inc.

Note: The sample results reported are based on the sample aliquot(s) tested.

BIO-CHEM Laboratories, Inc.

Date: 2/17/2009

ANALYTICAL REPORT

CLIENT:	DeLisle Associates Ltd.	Project Number:	EN08-102
Lab Order:	0902057	Client Sample ID:	EN08-102-58
Project:	Goodwill	Collection Date:	2/9/2009
Lab Sample ID:	0902057-19A	Matrix:	AQUEOUS

Analyses	Method Ref.	Result	Q	PQL	Units	DF	Analyst	Date
Volatiles by GC/MS								
1. 1,1,1-Trichloroethane	SW8260B	< 1.0		1.0	µg/L	1	GCP	2/16/2009
2. 1,1,2,2-Tetrachloroethane	SW8260B	< 1.0		1.0	µg/L	1	GCP	2/16/2009
3. 1,1,2-Trichloroethane	SW8260B	< 1.0		1.0	µg/L	1	GCP	2/16/2009
4. 1,1-Dichloroethane	SW8260B	< 1.0		1.0	µg/L	1	GCP	2/16/2009
5. 1,1-Dichloroethene	SW8260B	< 1.0		1.0	µg/L	1	GCP	2/16/2009
6. 1,2,4-Trimethylbenzene	SW8260B	< 1.0		1.0	µg/L	1	GCP	2/16/2009
7. 1,2-Dibromoethane	SW8260B	< 1.0		1.0	µg/L	1	GCP	2/16/2009
8. 1,2-Dichlorobenzene	SW8260B	< 1.0		1.0	µg/L	1	GCP	2/16/2009
9. 1,2-Dichloroethane	SW8260B	< 1.0		1.0	µg/L	1	GCP	2/16/2009
10. 1,2-Dichloropropane	SW8260B	< 1.0		1.0	µg/L	1	GCP	2/16/2009
11. 1,3,5-Trimethylbenzene	SW8260B	< 1.0		1.0	µg/L	1	GCP	2/16/2009
12. 1,3-Dichlorobenzene	SW8260B	< 1.0		1.0	µg/L	1	GCP	2/16/2009
13. 1,4-Dichlorobenzene	SW8260B	< 1.0		1.0	µg/L	1	GCP	2/16/2009
14. Benzene	SW8260B	< 1.0		1.0	µg/L	1	GCP	2/16/2009
15. Bromodichloromethane	SW8260B	< 1.0		1.0	µg/L	1	GCP	2/16/2009
16. Bromoform	SW8260B	< 1.0		1.0	µg/L	1	GCP	2/16/2009
17. Bromomethane	SW8260B	< 1.0		1.0	µg/L	1	GCP	2/16/2009
18. Carbon tetrachloride	SW8260B	< 1.0		1.0	µg/L	1	GCP	2/16/2009
19. Chlorobenzene	SW8260B	< 1.0		1.0	µg/L	1	GCP	2/16/2009
20. Chloroethane	SW8260B	< 1.0		1.0	µg/L	1	GCP	2/16/2009
21. Chloroform	SW8260B	< 1.0		1.0	µg/L	1	GCP	2/16/2009
22. Chloromethane	SW8260B	< 1.0		1.0	µg/L	1	GCP	2/16/2009
23. cis-1,2-Dichloroethene	SW8260B	< 1.0		1.0	µg/L	1	GCP	2/16/2009
24. cis-1,3-Dichloropropene	SW8260B	< 1.0		1.0	µg/L	1	GCP	2/16/2009
25. Dibromochloromethane	SW8260B	< 1.0		1.0	µg/L	1	GCP	2/16/2009
26. Ethylbenzene	SW8260B	< 1.0		1.0	µg/L	1	GCP	2/16/2009
27. m,p-Xylene	SW8260B	< 2.0		2.0	µg/L	1	GCP	2/16/2009
28. Methyl tert-butyl ether	SW8260B	< 4.0		4.0	µg/L	1	GCP	2/16/2009
29. Methylene chloride	SW8260B	< 5.0		5.0	µg/L	1	GCP	2/16/2009
30. o-Xylene	SW8260B	< 1.0		1.0	µg/L	1	GCP	2/16/2009
31. Tetrachloroethene	SW8260B	< 1.0		1.0	µg/L	1	GCP	2/16/2009
32. Toluene	SW8260B	< 1.0		1.0	µg/L	1	GCP	2/16/2009
33. trans-1,2-Dichloroethene	SW8260B	< 1.0		1.0	µg/L	1	GCP	2/16/2009
34. trans-1,3-Dichloropropene	SW8260B	< 1.0		1.0	µg/L	1	GCP	2/16/2009
35. Trichloroethene	SW8260B	< 1.0		1.0	µg/L	1	GCP	2/16/2009
36. Trichlorofluoromethane	SW8260B	< 1.0		1.0	µg/L	1	GCP	2/16/2009
37. Vinyl chloride	SW8260B	3.1		1.0	µg/L	1	GCP	2/16/2009

Definitions: PQL - Practical Quantitation Limit
DF - Dilution Factor

Qualifiers (Q): J - Detected below PQL but above MDL: Estimated
S - Spike Recovery Outside Acceptance Limits
B - Analyte detected in associated Method Blank
N - See case narrative for explanation

This report shall not be reproduced except in full, without the written approval of BIO-CHEM Laboratories, Inc.

Note: The sample results reported are based on the sample aliquot(s) tested.

BIO-CHEM Laboratories, Inc.

Date: *2/17/2009*

ANALYTICAL REPORT

CLIENT: DeLisle Associates Ltd.
Lab Order: 0902057
Project: Goodwill
Lab Sample ID: 0902057-20A

Project Number: EN08-102
Client Sample ID: EN08-102-59
Collection Date: 2/9/2009
Matrix: AQUEOUS

Analyses	Method Ref.	Result	Q	PQL	Units	DF.	Analyst	Date
Volatiles by GC/MS								
1. 1,1,1-Trichloroethane	SW8260B	< 1.0		1.0	µg/L	1	GCP	2/16/2009
2. 1,1,2,2-Tetrachloroethane	SW8260B	< 1.0		1.0	µg/L	1	GCP	2/16/2009
3. 1,1,2-Trichloroethane	SW8260B	< 1.0		1.0	µg/L	1	GCP	2/16/2009
4. 1,1-Dichloroethane	SW8260B	< 1.0		1.0	µg/L	1	GCP	2/16/2009
5. 1,1-Dichloroethene	SW8260B	< 1.0		1.0	µg/L	1	GCP	2/16/2009
6. 1,2,4-Trimethylbenzene	SW8260B	< 1.0		1.0	µg/L	1	GCP	2/16/2009
7. 1,2-Dibromoethane	SW8260B	< 1.0		1.0	µg/L	1	GCP	2/16/2009
8. 1,2-Dichlorobenzene	SW8260B	< 1.0		1.0	µg/L	1	GCP	2/16/2009
9. 1,2-Dichloroethane	SW8260B	< 1.0		1.0	µg/L	1	GCP	2/16/2009
10. 1,2-Dichloropropane	SW8260B	< 1.0		1.0	µg/L	1	GCP	2/16/2009
11. 1,3,5-Trimethylbenzene	SW8260B	< 1.0		1.0	µg/L	1	GCP	2/16/2009
12. 1,3-Dichlorobenzene	SW8260B	< 1.0		1.0	µg/L	1	GCP	2/16/2009
13. 1,4-Dichlorobenzene	SW8260B	< 1.0		1.0	µg/L	1	GCP	2/16/2009
14. Benzene	SW8260B	< 1.0		1.0	µg/L	1	GCP	2/16/2009
15. Bromodichloromethane	SW8260B	< 1.0		1.0	µg/L	1	GCP	2/16/2009
16. Bromoform	SW8260B	< 1.0		1.0	µg/L	1	GCP	2/16/2009
17. Bromomethane	SW8260B	< 1.0		1.0	µg/L	1	GCP	2/16/2009
18. Carbon tetrachloride	SW8260B	< 1.0		1.0	µg/L	1	GCP	2/16/2009
19. Chlorobenzene	SW8260B	< 1.0		1.0	µg/L	1	GCP	2/16/2009
20. Chloroethane	SW8260B	< 1.0		1.0	µg/L	1	GCP	2/16/2009
21. Chloroform	SW8260B	< 1.0		1.0	µg/L	1	GCP	2/16/2009
22. Chloromethane	SW8260B	< 1.0		1.0	µg/L	1	GCP	2/16/2009
23. cis-1,2-Dichloroethene	SW8260B	< 1.0		1.0	µg/L	1	GCP	2/16/2009
24. cis-1,3-Dichloropropene	SW8260B	< 1.0		1.0	µg/L	1	GCP	2/16/2009
25. Dibromochloromethane	SW8260B	< 1.0		1.0	µg/L	1	GCP	2/16/2009
26. Ethylbenzene	SW8260B	< 1.0		1.0	µg/L	1	GCP	2/16/2009
27. m,p-Xylene	SW8260B	< 2.0		2.0	µg/L	1	GCP	2/16/2009
28. Methyl tert-butyl ether	SW8260B	< 4.0		4.0	µg/L	1	GCP	2/16/2009
29. Methylene chloride	SW8260B	< 5.0		5.0	µg/L	1	GCP	2/16/2009
30. o-Xylene	SW8260B	< 1.0		1.0	µg/L	1	GCP	2/16/2009
31. Tetrachloroethene	SW8260B	< 1.0		1.0	µg/L	1	GCP	2/16/2009
32. Toluene	SW8260B	< 1.0		1.0	µg/L	1	GCP	2/16/2009
33. trans-1,2-Dichloroethene	SW8260B	< 1.0		1.0	µg/L	1	GCP	2/16/2009
34. trans-1,3-Dichloropropene	SW8260B	< 1.0		1.0	µg/L	1	GCP	2/16/2009
35. Trichloroethene	SW8260B	< 1.0		1.0	µg/L	1	GCP	2/16/2009
36. Trichlorofluoromethane	SW8260B	< 1.0		1.0	µg/L	1	GCP	2/16/2009
37. Vinyl chloride	SW8260B	4.4		1.0	µg/L	1	GCP	2/16/2009

Definitions: PQL - Practical Quantitation Limit
DF - Dilution Factor

Qualifiers (Q): J - Detected below PQL but above MDL: Estimated
S - Spike Recovery Outside Acceptance Limits
B - Analyte detected in associated Method Blank
N - See case narrative for explanation

This report shall not be reproduced except in full, without the written approval of BIO-CHEM Laboratories, Inc.

Note: The sample results reported are based on the sample aliquot(s) tested.

BIO-CHEM Laboratories, Inc.

Date: *2/17/2009*

ANALYTICAL REPORT

CLIENT: DeLisle Associates Ltd.
Lab Order: 0902057
Project: Goodwill
Lab Sample ID: 0902057-21A

Project Number: EN08-102
Client Sample ID: EN08-102-60
Collection Date: 2/9/2009
Matrix: AQUEOUS

Analyses	Method Ref.	Result	Q	PQL	Units	DF	Analyst	Date
Volatiles by GC/MS								
1. 1,1,1-Trichloroethane	SW8260B	< 1.0		1.0	µg/L	1	GCP	2/16/2009
2. 1,1,2,2-Tetrachloroethane	SW8260B	< 1.0		1.0	µg/L	1	GCP	2/16/2009
3. 1,1,2-Trichloroethane	SW8260B	< 1.0		1.0	µg/L	1	GCP	2/16/2009
4. 1,1-Dichloroethane	SW8260B	< 1.0		1.0	µg/L	1	GCP	2/16/2009
5. 1,1-Dichloroethene	SW8260B	< 1.0		1.0	µg/L	1	GCP	2/16/2009
6. 1,2,4-Trimethylbenzene	SW8260B	< 1.0		1.0	µg/L	1	GCP	2/16/2009
7. 1,2-Dibromoethane	SW8260B	< 1.0		1.0	µg/L	1	GCP	2/16/2009
8. 1,2-Dichlorobenzene	SW8260B	< 1.0		1.0	µg/L	1	GCP	2/16/2009
9. 1,2-Dichloroethane	SW8260B	< 1.0		1.0	µg/L	1	GCP	2/16/2009
10. 1,2-Dichloropropane	SW8260B	< 1.0		1.0	µg/L	1	GCP	2/16/2009
11. 1,3,5-Trimethylbenzene	SW8260B	< 1.0		1.0	µg/L	1	GCP	2/16/2009
12. 1,3-Dichlorobenzene	SW8260B	< 1.0		1.0	µg/L	1	GCP	2/16/2009
13. 1,4-Dichlorobenzene	SW8260B	< 1.0		1.0	µg/L	1	GCP	2/16/2009
14. Benzene	SW8260B	< 1.0		1.0	µg/L	1	GCP	2/16/2009
15. Bromodichloromethane	SW8260B	< 1.0		1.0	µg/L	1	GCP	2/16/2009
16. Bromoform	SW8260B	< 1.0		1.0	µg/L	1	GCP	2/16/2009
17. Bromomethane	SW8260B	< 1.0		1.0	µg/L	1	GCP	2/16/2009
18. Carbon tetrachloride	SW8260B	< 1.0		1.0	µg/L	1	GCP	2/16/2009
19. Chlorobenzene	SW8260B	< 1.0		1.0	µg/L	1	GCP	2/16/2009
20. Chloroethane	SW8260B	< 1.0		1.0	µg/L	1	GCP	2/16/2009
21. Chloroform	SW8260B	< 1.0		1.0	µg/L	1	GCP	2/16/2009
22. Chloromethane	SW8260B	< 1.0		1.0	µg/L	1	GCP	2/16/2009
23. cis-1,2-Dichloroethene	SW8260B	< 1.0		1.0	µg/L	1	GCP	2/16/2009
24. cis-1,3-Dichloropropene	SW8260B	< 1.0		1.0	µg/L	1	GCP	2/16/2009
25. Dibromochloromethane	SW8260B	< 1.0		1.0	µg/L	1	GCP	2/16/2009
26. Ethylbenzene	SW8260B	< 1.0		1.0	µg/L	1	GCP	2/16/2009
27. m,p-Xylene	SW8260B	< 2.0		2.0	µg/L	1	GCP	2/16/2009
28. Methyl tert-butyl ether	SW8260B	< 4.0		4.0	µg/L	1	GCP	2/16/2009
29. Methylene chloride	SW8260B	< 5.0		5.0	µg/L	1	GCP	2/16/2009
30. o-Xylene	SW8260B	< 1.0		1.0	µg/L	1	GCP	2/16/2009
31. Tetrachloroethene	SW8260B	2.6		1.0	µg/L	1	GCP	2/16/2009
32. Toluene	SW8260B	< 1.0		1.0	µg/L	1	GCP	2/16/2009
33. trans-1,2-Dichloroethene	SW8260B	< 1.0		1.0	µg/L	1	GCP	2/16/2009
34. trans-1,3-Dichloropropene	SW8260B	< 1.0		1.0	µg/L	1	GCP	2/16/2009
35. Trichloroethene	SW8260B	< 1.0		1.0	µg/L	1	GCP	2/16/2009
36. Trichlorofluoromethane	SW8260B	< 1.0		1.0	µg/L	1	GCP	2/16/2009
37. Vinyl chloride	SW8260B	2.9		1.0	µg/L	1	GCP	2/16/2009

Definitions: PQL - Practical Quantitation Limit
DF - Dilution Factor

Qualifiers (Q): J - Detected below PQL but above MDL: Estimated
S - Spike Recovery Outside Acceptance Limits
B - Analyte detected in associated Method Blank
N - See case narrative for explanation

This report shall not be reproduced except in full, without the written approval of BIO-CHEM Laboratories, Inc.

Note: The sample results reported are based on the sample aliquot(s) tested.

BIO-CHEM Laboratories, Inc.

Date: *2/17/2009*

ANALYTICAL REPORT

CLIENT:	DeLisle Associates Ltd.	Project Number:	EN08-102
Lab Order:	0902057	Client Sample ID:	Trip Blank
Project:	Goodwill	Collection Date:	2/9/2009
Lab Sample ID:	0902057-22A	Matrix:	AQUEOUS

Analyses	Method Ref.	Result	Q	PQL	Units	DF	Analyst	Date
Volatiles by GC/MS								
1. 1,1,1-Trichloroethane	SW8260B	< 1.0		1.0	µg/L	1	GCP	2/16/2009
2. 1,1,2,2-Tetrachloroethane	SW8260B	< 1.0		1.0	µg/L	1	GCP	2/16/2009
3. 1,1,2-Trichloroethane	SW8260B	< 1.0		1.0	µg/L	1	GCP	2/16/2009
4. 1,1-Dichloroethane	SW8260B	< 1.0		1.0	µg/L	1	GCP	2/16/2009
5. 1,1-Dichloroethene	SW8260B	< 1.0		1.0	µg/L	1	GCP	2/16/2009
6. 1,2,4-Trimethylbenzene	SW8260B	< 1.0		1.0	µg/L	1	GCP	2/16/2009
7. 1,2-Dibromoethane	SW8260B	< 1.0		1.0	µg/L	1	GCP	2/16/2009
8. 1,2-Dichlorobenzene	SW8260B	< 1.0		1.0	µg/L	1	GCP	2/16/2009
9. 1,2-Dichloroethane	SW8260B	< 1.0		1.0	µg/L	1	GCP	2/16/2009
10. 1,2-Dichloropropane	SW8260B	< 1.0		1.0	µg/L	1	GCP	2/16/2009
11. 1,3,5-Trimethylbenzene	SW8260B	< 1.0		1.0	µg/L	1	GCP	2/16/2009
12. 1,3-Dichlorobenzene	SW8260B	< 1.0		1.0	µg/L	1	GCP	2/16/2009
13. 1,4-Dichlorobenzene	SW8260B	< 1.0		1.0	µg/L	1	GCP	2/16/2009
14. Benzene	SW8260B	< 1.0		1.0	µg/L	1	GCP	2/16/2009
15. Bromodichloromethane	SW8260B	< 1.0		1.0	µg/L	1	GCP	2/16/2009
16. Bromoform	SW8260B	< 1.0		1.0	µg/L	1	GCP	2/16/2009
17. Bromomethane	SW8260B	< 1.0		1.0	µg/L	1	GCP	2/16/2009
18. Carbon tetrachloride	SW8260B	< 1.0		1.0	µg/L	1	GCP	2/16/2009
19. Chlorobenzene	SW8260B	< 1.0		1.0	µg/L	1	GCP	2/16/2009
20. Chloroethane	SW8260B	< 1.0		1.0	µg/L	1	GCP	2/16/2009
21. Chloroform	SW8260B	< 1.0		1.0	µg/L	1	GCP	2/16/2009
22. Chloromethane	SW8260B	< 1.0		1.0	µg/L	1	GCP	2/16/2009
23. cis-1,2-Dichloroethene	SW8260B	< 1.0		1.0	µg/L	1	GCP	2/16/2009
24. cis-1,3-Dichloropropene	SW8260B	< 1.0		1.0	µg/L	1	GCP	2/16/2009
25. Dibromochloromethane	SW8260B	< 1.0		1.0	µg/L	1	GCP	2/16/2009
26. Ethylbenzene	SW8260B	< 1.0		1.0	µg/L	1	GCP	2/16/2009
27. m,p-Xylene	SW8260B	< 2.0		2.0	µg/L	1	GCP	2/16/2009
28. Methyl tert-butyl ether	SW8260B	< 4.0		4.0	µg/L	1	GCP	2/16/2009
29. Methylene chloride	SW8260B	< 5.0		5.0	µg/L	1	GCP	2/16/2009
30. o-Xylene	SW8260B	< 1.0		1.0	µg/L	1	GCP	2/16/2009
31. Tetrachloroethene	SW8260B	< 1.0		1.0	µg/L	1	GCP	2/16/2009
32. Toluene	SW8260B	< 1.0		1.0	µg/L	1	GCP	2/16/2009
33. trans-1,2-Dichloroethene	SW8260B	< 1.0		1.0	µg/L	1	GCP	2/16/2009
34. trans-1,3-Dichloropropene	SW8260B	< 1.0		1.0	µg/L	1	GCP	2/16/2009
35. Trichloroethene	SW8260B	< 1.0		1.0	µg/L	1	GCP	2/16/2009
36. Trichlorofluoromethane	SW8260B	< 1.0		1.0	µg/L	1	GCP	2/16/2009
37. Vinyl chloride	SW8260B	< 1.0		1.0	µg/L	1	GCP	2/16/2009

Definitions: PQL - Practical Quantitation Limit
DF - Dilution Factor

Qualifiers (Q): J - Detected below PQL but above MDL: Estimated
S - Spike Recovery Outside Acceptance Limits
B - Analyte detected in associated Method Blank
N - See case narrative for explanation

This report shall not be reproduced except in full, without the written approval of BIO-CHEM Laboratories, Inc.

Note: The sample results reported are based on the sample aliquot(s) tested.

APPENDIX G

SVE OBSERVATION WELL LOG

PROJECT NAME: Goodwill Industries
PROJECT NUMBER: EN08-044
SITE LOCATION: 2700 N. Pitcher St., Kalamazoo, MI
DATE INSTALLED: March 02, 2009
DRILLER/METHOD: DeLisle - Hand Auger
SURFACE: Poured Concrete Slab
LOGGED BY: Bobby Glasser (DeLisle)

WELL ID: OB-1
WELL DIAMETER: 1-inch
CASING MATERIAL: Sch-40 PVC
SCREEN LENGTH: 2.5-foot
GROUND ELEVATION: Not Surveyed
TOC ELEVATION: N/A
SWL (from TOC): N/A

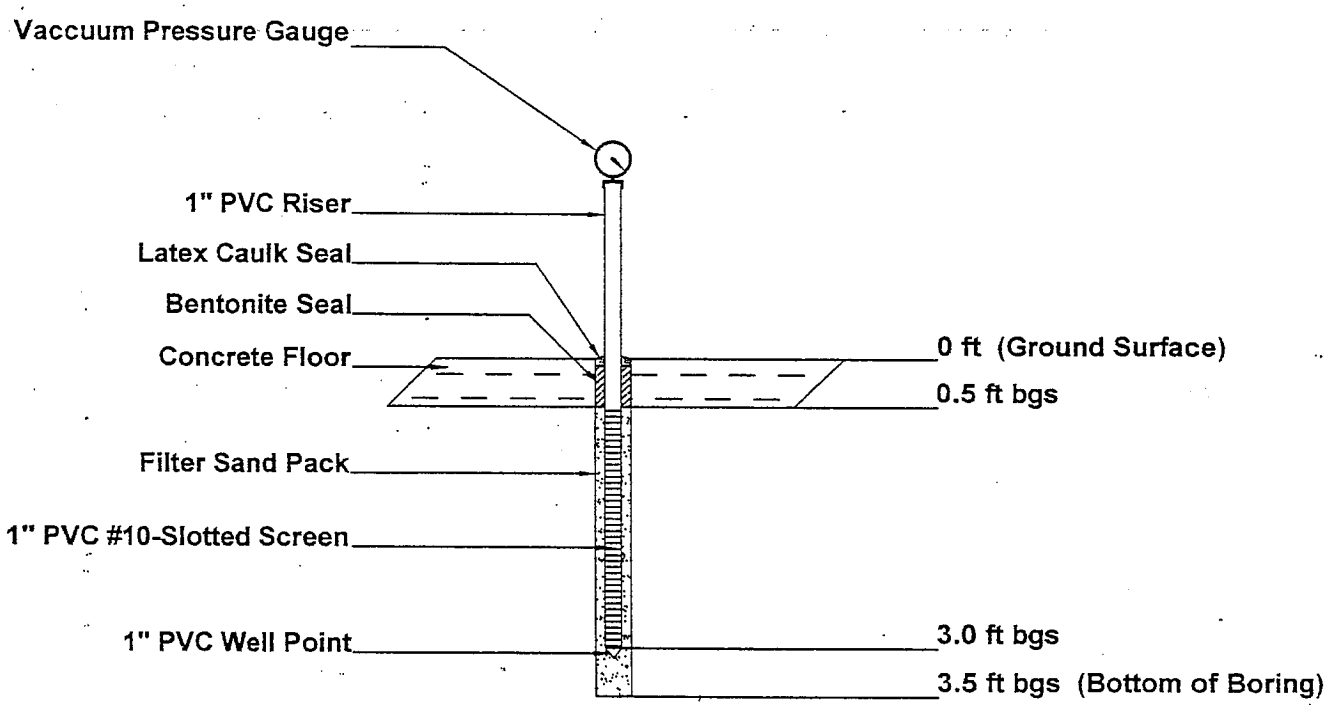

Well ID: OB-1	DeLisle Associates LTD	Project No. EN08-044

SVE OBSERVATION WELL LOG

PROJECT NAME:	Goodwill Industries	WELL ID:	OB-2
PROJECT NUMBER:	EN08-044	WELL DIAMETER:	1-inch
SITE LOCATION:	2700 N. Pitcher St., Kalamazoo, MI	CASING MATERIAL:	Sch-40 PVC
DATE INSTALLED:	March 02, 2009	SCREEN LENGTH:	2.5-foot
DRILLER/METHOD:	DeLisle - Hand Auger	GROUND ELEVATION:	Not Surveyed
SURFACE:	Poured Concrete Slab	TOC ELEVATION:	N/A
LOGGED BY:	Bobby Glasser (DeLisle)	SWL (from TOC):	N/A

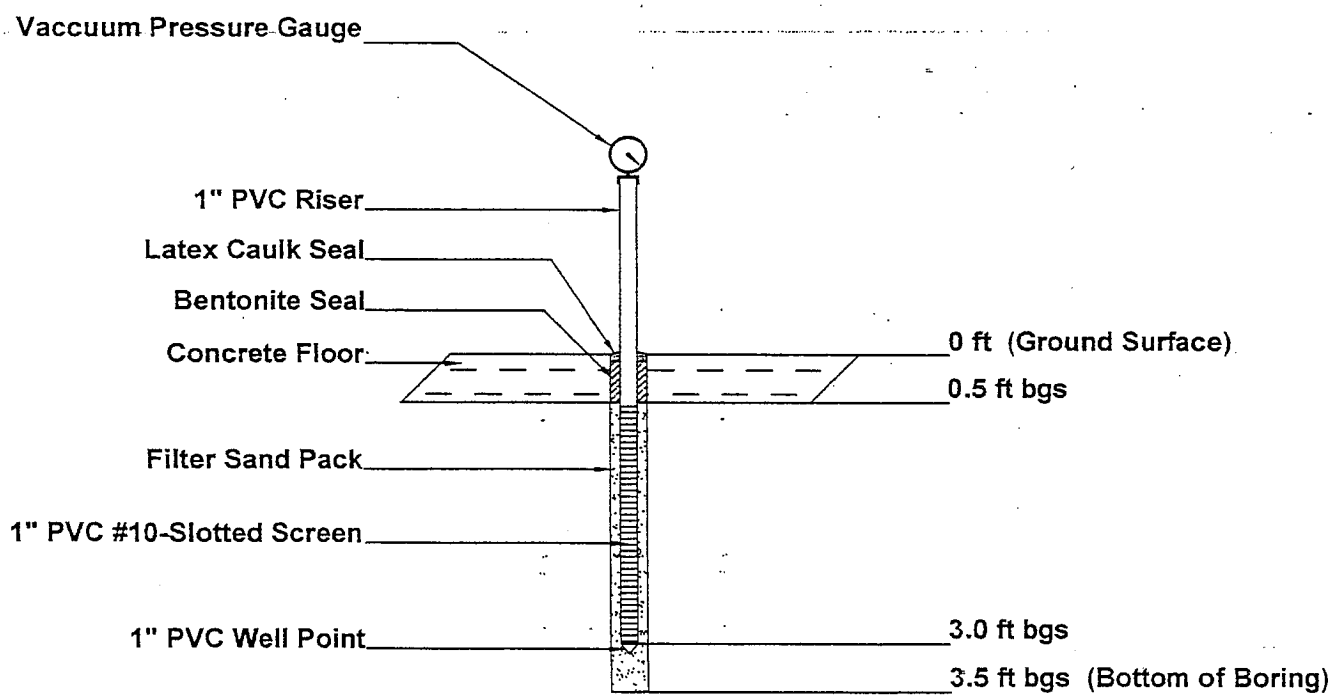

Well ID: OB-2	DeLisle Associates LTD	Project No. EN08-044

SVE OBSERVATION WELL LOG

PROJECT NAME:	Goodwill Industries	WELL ID:	OB-3
PROJECT NUMBER:	EN08-044	WELL DIAMETER:	1-inch
SITE LOCATION:	2700 N. Pitcher St., Kalamazoo, MI	CASING MATERIAL:	Sch-40 PVC
DATE INSTALLED:	March 02, 2009	SCREEN LENGTH:	2.5-foot
DRILLER/METHOD:	DeLisle - Hand Auger	GROUND ELEVATION:	Not Surveyed
SURFACE:	Poured Concrete Slab	TOC ELEVATION:	N/A
LOGGED BY:	Bobby Glasser (DeLisle)	SWL (from TOC):	N/A

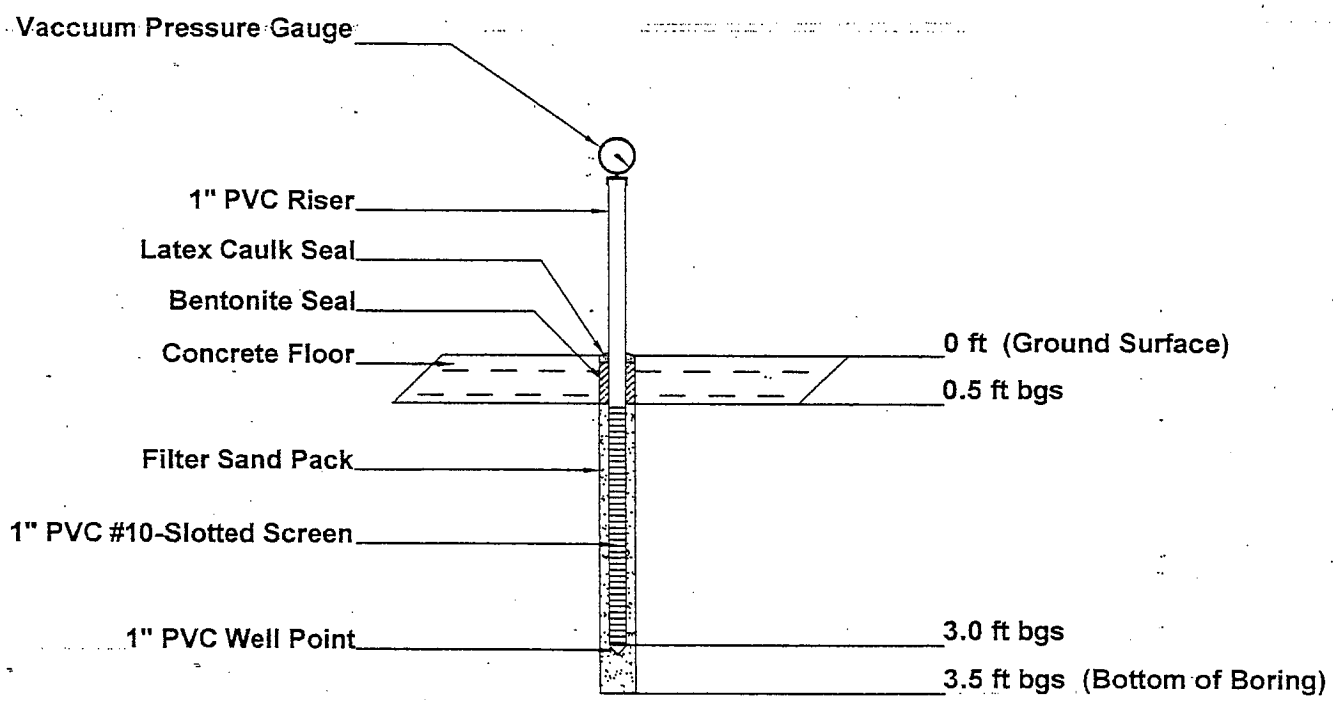

Well ID: OB-3	DeLisle Associates LTD	Project No. EN08-044

SVE OBSERVATION WELL LOG

PROJECT NAME:	Goodwill Industries	WELL ID:	OB-4
PROJECT NUMBER:	EN08-044	WELL DIAMETER:	1-inch
SITE LOCATION:	2700 N. Pitcher St., Kalamazoo, MI	CASING MATERIAL:	Sch-40 PVC
DATE INSTALLED:	March 02, 2009	SCREEN LENGTH:	4.0-foot
DRILLER/METHOD:	DeLisle - Hand Auger	GROUND ELEVATION:	Not Surveyed
SURFACE:	Poured Concrete Slab	TOC ELEVATION:	N/A
LOGGED BY:	Bobby Glasser (DeLisle)	SWL (from TOC):	N/A

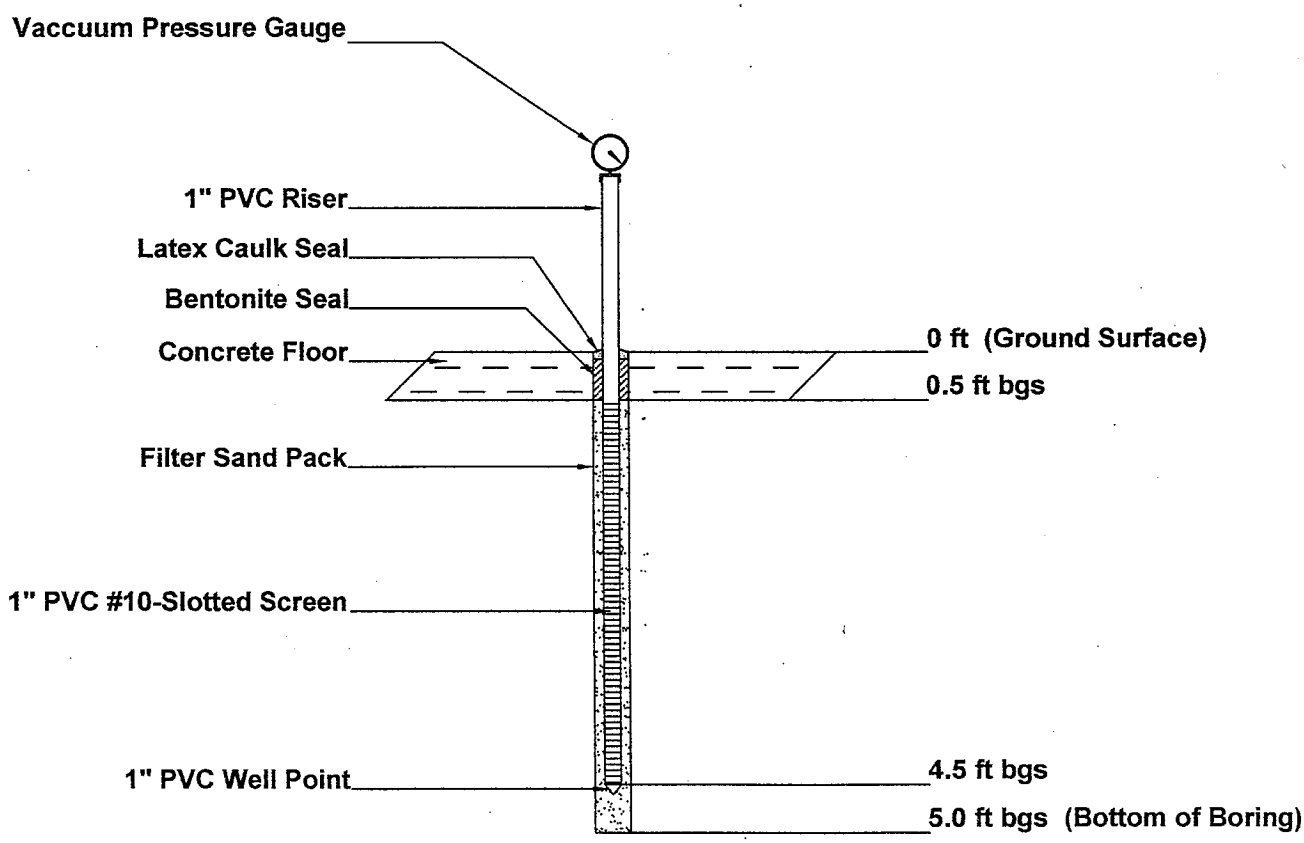

Well ID: OB-4	DeLisle Associates LTD	Project No. EN08-044

APPENDIX H

ANALYTICS CORPORATION
10329 Stony Run Lane
Ashland, Virginia 23005
804-365-3000 Phone
800-888-8061 Phone
804-365-3002 Fax
www.analyticscorp.com

Group No. N078-083
Account No. 21309005
Report Date: 03/24/09

ANDY GRAHAM
DELISLE ASSOCIATES

5050 SOUTH SPRINKLE RD
PORTAGE, MI 49002

Final Report

Date Received: 03/19/09
Sample Type: 3 - Air Sample(s)
Project: GOODWILL, EN08_101 PO Number: 09-061

Notes

Results provided in this report relate only to the items tested.

Attached are the results we obtained on the analysis of your samples. Any Chains-of-Custody associated with this sample group are also enclosed. Air concentrations are calculated as a convenience to the client and the overall accuracy of this result depends on both the accuracy of the air volume and the amount found by analysis. Theoretical Air Volumes for passive monitors are calculated using the sampling time submitted and the manufacturer's listed sampling rate for each compound.

For blanks and non-detects the results indicated with a '<' value represents the reporting limit for that analysis. Unless otherwise noted results are not corrected for blank values.

Unless the signature of the appropriate manager(s) appears on the final page of this report, this report should be considered PRELIMINARY and is subject to change.

We appreciate your confidence in allowing Analytics to be your testing laboratory. Any questions regarding this report can be addressed by calling our client services department (800-888-8061).

James A. Calpin, CIH
Laboratory Director

End of Report

LABORATORY TEST REQUEST

ACCOUNT NUMBER, NAME AND ADDRESS

DeLisle Associates LTD
5050 S. Sprinkle Rd.
Portage, MI 49002

ANALYTICS

10329 Stony Run Lane
Ashland, VA 23005
(804) 365-3000
TOLL FREE (800) 888-9061
FAX (804) 365-3002

DATE SHIPPED	# OF SAMPLES	SAMPLE TYPE/MEDIA	PROJECT NAME OR NUMBER
3-17-09	3	Coconut Shell/Charcoal	Goodwill, EN08-101

PURCHASE ORDER NO.	CONTACT	TELEPHONE NUMBER
09-061	Andy Graham andyg@delisleassoc.net	269-373-4500

TURN AROUND TIME
- ☐ SAMEDAY
- ☐ 1 DAY
- ☐ 2 DAY
- ☒ STANDARD
- * CALL FOR AVAILABILITY
- * EXTRA CHARGE

SPECIAL INSTRUCTIONS AND/OR UNUSUAL CONDITIONS

☒ FAX RESULTS FAX NUMBER: (269) 373-1044
☒ EMAIL RESULTS - EMAIL: andyg@delisleassoc.net

FOR LABORATORY USE ONLY	SAMPLE # OR SAMPLE AREA	SAMPLE DATE	SAMPLE VOLUME/LITERS	ANALYSIS REQUESTED-PLEASE USE SEPARATE LABORATORY TEST REQUEST FOR EACH SAMPLE TYPE
	01	3-16-09	45 L.	Tetrachloroethylene, 127-18-4
	02	3-16-09	58.26 L.	Organic Solvent Profile
	03	3-16-09	15.2 L.	Tetrachloroethylene, 127-18-4

CHAIN OF CUSTODY RECORD

SAMPLES HAVE BEEN SEALED FOR TRANSPORT AND DELIVERED TO LABORATORY VIA:

UPS
CARRIER

—
IF "ANALYTICS COURIER" SIGN HERE

SIGN HERE TO INITIATE CHAIN OF CUSTODY

3-17-09
DATE

DATE/TIME	CONDITION OF SAMPLE	SAMPLES RECEIVED BY	SAMPLES RELEASED BY
3-17-09 1225 EST		SIGNATURE(SAMPLE RECEIVING)	SIGNATURE(SAMPLE RECEIVING)
		SIGNATURE(SAMPLE ADMINISTRATION) JAMES ALTIERI	SIGNATURE(SAMPLE ADMINISTRATION)
		SIGNATURE(LAB)	SIGNATURE(LAB)
		SIGNATURE(LAB)	SIGNATURE(LAB)

PLEASE RETAIN PART 3 FOR YOUR RECORDS

ANALYTICS

MAR 3 0 2009

ANALYTICS CORPORATION
10329 Stony Run Lane
Ashland, Virginia 23005
804-365-3000 Phone
800-888-8061 Phone
804-365-3002 Fax
www.analyticscorp.com

Group No. N078-083
Account No. 21309005
Report Date: 03/24/09

ANDY GRAHAM
DELISLE ASSOCIATES

5050 SOUTH SPRINKLE RD
PORTAGE, MI 49002

**** FINAL REPORT ****

Date Received: 03/19/09
Sample Type: 3 - Air Sample(s)
Project: GOODWILL, EN08_101 PO Number: 09-061

Analytical Results

Lab	Parameter	Volume	Amount	LOQ	Concentration	Analysis
-001	01 Samp Date: 03/16/09		Charcoal Tube 50/100mg			
-	PERC-Front		3640 ug	10 ug		03/23/09
-	PERC-Rear		ND	10 ug		03/23/09
-	PERC-Total	45 L	3640 ug	10 ug	11.9 ppm	03/23/09
-002	02 Samp Date: 03/16/09		Charcoal Tube 50/100mg			
-	1,1,1-TCE-Front		< 10 ug	10 ug		03/21/09
-	1,1,1-TCE-Rear		< 10 ug	10 ug		03/21/09
-	1,1,1-TCE-Total	58.26	< 10 ug	10 ug	< 0.03 ppm	03/21/09
-	TMBZ-Front		< 20 ug	20 ug		03/21/09
-	TMBZ-Rear		< 20 ug	20 ug		03/21/09
-	TMBZ-Total	58.26	< 20 ug	20 ug	< 0.07 ppm	03/21/09
-	1,2-DCE-Front		< 10 ug	10 ug		03/21/09
-	1,2-DCE-Rear		< 10 ug	10 ug		03/21/09
-	1,2-DCE-Total	58.26	< 10 ug	10 ug	< 0.04 ppm	03/21/09
-	DIOXA-Front		< 20 ug	20 ug		03/21/09
-	DIOXA-Rear		< 20 ug	20 ug		03/21/09
-	DIOXA-Total	58.26	< 20 ug	20 ug	< 0.1 ppm	03/21/09
-	Acetone-Front		< 20 ug	20 ug		03/21/09
-	Acetone-Rear		< 20 ug	20 ug		03/21/09
-	Acetone-Total	58.26	< 20 ug	20 ug	< 0.14 ppm	03/21/09
-	Benzene-Front		< 5 ug	5 ug		03/21/09
-	Benzene-Rear		< 5 ug	5 ug		03/21/09
-	Benzene-Total	58.26	< 5 ug	5 ug	< 0.03 ppm	03/21/09
-	BUAC-Front		< 20 ug	20 ug		03/21/09
-	BUAC-Rear		< 20 ug	20 ug		03/21/09
-	BUAC-Total	58.26	< 20 ug	20 ug	< 0.07 ppm	03/21/09
-	CLBZ-Front		< 20 ug	20 ug		03/21/09
-	CLBZ-Rear		< 20 ug	20 ug		03/21/09

ANALYTICS CORPORATION
10329 Stony Run Lane
Ashland, Virginia 23005
804-365-3000 Phone
800-888-8061 Phone
804-365-3002 Fax
www.analyticscorp.com

Group No. N078-083
Account No. 21309005
Report Date: 03/24/09

ANDY GRAHAM
DELISLE ASSOCIATES

5050 SOUTH SPRINKLE RD
PORTAGE, MI 49002

Final Report

Date Received: 03/19/09
Sample Type: 3 - Air Sample(s)
Project: GOODWILL, EN08_101 PO Number: 09-061

Analytical Results

Lab	Parameter	Volume	Amount	LOQ	Concentration	Analysis
-	CLBZ-Total	58.26	< 20 ug	20 ug	< 0.07 ppm	03/21/09
-	CHXONE-Front		< 5 ug	5 ug		03/21/09
-	CHXONE-Rear		< 5 ug	5 ug		03/21/09
-	CHXONE-Total	58.26	< 5 ug	5 ug	< 0.02 ppm	03/21/09
-	Decane-Front		< 10 ug	10 ug		03/21/09
-	Decane-Rear		< 10 ug	10 ug		03/21/09
-	Decane-Total	58.26	< 10 ug	10 ug	< 0.03 ppm	03/21/09
-	ETAC-Front		< 20 ug	20 ug		03/21/09
-	ETAC-Rear		< 20 ug	20 ug		03/21/09
-	ETAC-Total	58.26	< 20 ug	20 ug	< 0.1 ppm	03/21/09
-	ETBZ-Front		< 5 ug	5 ug		03/21/09
-	ETBZ-Rear		< 5 ug	5 ug		03/21/09
-	ETBZ-Total	58.26	< 5 ug	5 ug	< 0.02 ppm	03/21/09
-	Heptane-Front		< 10 ug	10 ug		03/21/09
-	Heptane-Rear		< 10 ug	10 ug		03/21/09
-	Heptane-Total	58.26	< 10 ug	10 ug	< 0.04 ppm	03/21/09
-	Hexane-Front		< 10 ug	10 ug		03/21/09
-	Hexane-Rear		< 10 ug	10 ug		03/21/09
-	Hexane-Total	58.26	< 10 ug	10 ug	< 0.05 ppm	03/21/09
-	Isooctane-Front		< 10 ug	10 ug		03/21/09
-	Isooctane-Rear		< 10 ug	10 ug		03/21/09
-	Isooctane-Total	58.26	< 10 ug	10 ug	< 0.04 ppm	03/21/09
-	MEK-Front		< 5 ug	5 ug		03/21/09
-	MEK-Rear		< 5 ug	5 ug		03/21/09
-	MEK-Total	58.26	< 5 ug	5 ug	< 0.03 ppm	03/21/09
-	MIBK-Front		< 5 ug	5 ug		03/21/09
-	MIBK-Rear		< 5 ug	5 ug		03/21/09
-	MIBK-Total	58.26	< 5 ug	5 ug	< 0.02 ppm	03/21/09
-	DCM-Front		< 10 ug	10 ug		03/21/09
-	DCM-Rear		< 10 ug	10 ug		03/21/09

Quality Industrial Hygiene and Environmental Laboratory Testing

ANALYTICS CORPORATION
10329 Stony Run Lane
Ashland, Virginia 23005
804-365-3000 Phone
800-888-8061 Phone
804-365-3002 Fax
www.analyticscorp.com

Group No. N078-083
Account No. 21309005
Report Date: 03/24/09

ANDY GRAHAM
DELISLE ASSOCIATES

5050 SOUTH SPRINKLE RD
PORTAGE, MI 49002

Final Report

Date Received: 03/19/09
Sample Type: 3 - Air Sample(s)
Project: GOODWILL, EN08_101 PO Number: 09-061

Analytical Results

Lab	Parameter	Volume	Amount	LOQ	Concentration	Analysis
-	DCM-Total	58.26	< 10 ug	10 ug	< 0.05 ppm	03/21/09
-	Octane-Front		< 10 ug	10 ug		03/21/09
-	Octane-Rear		< 10 ug	10 ug		03/21/09
-	Octane-Total	58.26	< 10 ug	10 ug	< 0.04 ppm	03/21/09
-	Pentane-Front		< 10 ug	10 ug		03/21/09
-	Pentane-Rear		< 10 ug	10 ug		03/21/09
-	Pentane-Total	58.26	< 10 ug	10 ug	< 0.06 ppm	03/21/09
-	NPRAC-Front		< 10 ug	10 ug		03/21/09
-	NPRAC-Rear		< 10 ug	10 ug		03/21/09
-	NPRAC-Total	58.26	< 10 ug	10 ug	< 0.04 ppm	03/21/09
-	Styrene-Front		< 40 ug	40 ug		03/21/09
-	Styrene-Rear		< 40 ug	40 ug		03/21/09
-	Styrene-Total	58.26	< 40 ug	40 ug	< 0.16 ppm	03/21/09
-	PERC-Front		< 10 ug	10 ug		03/21/09
-	PERC-Rear		< 10 ug	10 ug		03/21/09
-	PERC-Total	58.26	< 10 ug	10 ug	< 0.03 ppm	03/21/09
-	THF-Front		< 20 ug	20 ug		03/21/09
-	THF-Rear		< 20 ug	20 ug		03/21/09
-	THF-Total	58.26	< 20 ug	20 ug	< 0.12 ppm	03/21/09
-	Toluene-Front		< 5 ug	5 ug		03/21/09
-	Toluene-Rear		< 5 ug	5 ug		03/21/09
-	Toluene-Total	58.26	< 5 ug	5 ug	< 0.02 ppm	03/21/09
-	THCH-Front		< 20 ug	20 ug		03/21/09
-	THCH-Rear		< 20 ug	20 ug		03/21/09
-	THCH-Total	58.26	< 20 ug	20 ug	< 0.34 mg/M3	03/21/09
-	TCE-Front		< 10 ug	10 ug		03/21/09
-	TCE-Rear		< 10 ug	10 ug		03/21/09
-	TCE-Total	58.26	< 10 ug	10 ug	< 0.03 ppm	03/21/09
-	m-Xylene-Front		< 5 ug	5 ug		03/21/09
-	m-Xylene-Rear		< 5 ug	5 ug		03/21/09

ANALYTICS CORPORATION
10329 Stony Run Lane
Ashland, Virginia 23005
804-365-3000 Phone
800-888-8061 Phone
804-365-3002 Fax
www.analyticscorp.com

Group No. N078-083
Account No. 21309005
Report Date: 03/24/09

NDY GRAHAM
ELISLE ASSOCIATES

050 SOUTH SPRINKLE RD
ORTAGE, MI 49002

Final Report

ate Received: 03/19/09
ample Type: 3 - Air Sample(s)
roject: GOODWILL, EN08_101 PO Number: 09-061

nalytical Results

Lab	Parameter	Volume	Amount	LOQ	Concentration	Analysis
-	m-Xylene-Total	58.26	< 5 ug	5 ug	< 0.02 ppm	03/21/09
-	o-Xylene-Front		< 5 ug	5 ug		03/21/09
-	o-Xylene-Rear		< 5 ug	5 ug		03/21/09
-	o-Xylene-Total	58.26	< 5 ug	5 ug	< 0.02 ppm	03/21/09
-	p-Xylene-Front		< 5 ug	5 ug		03/21/09
-	p-Xylene-Rear		< 5 ug	5 ug		03/21/09
-	p-Xylene-Total	58.26	< 5 ug	5 ug	< 0.02 ppm	03/21/09
-003 03	Samp Date: 03/16/09		Charcoal Tube 50/100mg			
-	PERC-Front		346 ug	10 ug		03/24/09
-	PERC-Rear		ND	10 ug		03/24/09
-	PERC-Total	15.2 L	346 ug	10 ug	3.36 ppm	03/24/09

bbreviations: ug = micrograms, mg = milligrams, mg/M3 = milligrams per cubic meter of air, g = grams, ug/M3 = micrograms per cubic meter of air, L = liters, all Volumes given in liters, ppm = parts per million, ppb = parts per billion, Areas given in square feet; ND = Not Detected; ug/wp = ug/wipe; NVG = No Volume Given. NAG = No Area Given, LOQ = Limit of Quantitation.

ANALYTICS CORPORATION
10329 Stony Run Lane
Ashland, Virginia 23005
804-365-3000 Phone
800-888-8061 Phone
804-365-3002 Fax
www.analyticscorp.com

Group No. N078-083
Account No. 21309005
Report Date: 03/24/09

ANDY GRAHAM
DELISLE ASSOCIATES

5050 SOUTH SPRINKLE RD
PORTAGE, MI 49002

Final Report

Summary of Analytical Methods

Compound Name	Analytical Method	Abbreviation
1,1,1-Trichloroethane	OSHA 7M	1,1,1-TCE
1,2,4-Trimethylebenzene	OSHA 7M	TMBZ
1,2-Dichloroethane	OSHA 7M	1,2-DCE
1,4 Dioxane	OSHA 7M	DIOXA
Acetone	OSHA 7M	----
Benzene	OSHA 7M	----
Butyl Acetate	OSHA 7M	BUAC
Chlorobenzene	OSHA 7M	CLBZ
Cyclohexanone	OSHA 7M	CHXONE
Decane	OSHA 7M	----
Ethyl Acetate	OSHA 7M	ETAC
Ethyl Benzene	OSHA 7M	ETBZ
Heptane	OSHA 7M	----
Hexane	OSHA 7M	----
Isooctane	OSHA 7M	----
Methyl Ethyl Ketone	OSHA 7M	MEK
Methyl Isobutyl Ketone	OSHA 7M	MIBK
Methylene Chloride	OSHA 7M	DCM
Octane	OSHA 7M	----
Pentane	OSHA 7M	----
Propyl Acetate	OSHA 7M	NPRAC
Styrene	OSHA 7M	----
Tetrachloroethylene	OSHA 7M	PERC
Tetrahydrofuran	OSHA 7M	THF
Toluene	OSHA 7M	----
Total Hydrocarbons as Hexane	OSHA 7M	THCH
Trichloroethylene	OSHA 7M	TCE
m-Xylene	OSHA 7M	----
o-Xylene	OSHA 7M	----
p-Xylene	OSHA 7M	----
Tetrachloroethylene	NIOSH Method 1003	PERC

Quality Industrial Hygiene and Environmental Laboratory Testing

APPENDIX I

SOIL VAPOR EXTRACTION WELL LOG

PROJECT NAME:	Goodwill Industries	WELL ID:	VE-1
PROJECT NUMBER:	EN08-044	WELL DIAMETER:	2-inch
SITE LOCATION:	2700 N. Pitcher St., Kalamazoo, MI	CASING MATERIAL:	Sch-40 PVC
DATE INSTALLED:	March 24, 2009	SCREEN LENGTH:	5-foot
DRILLER/METHOD:	The Probe Geosampling - Direct Push	GROUND ELEVATION:	Not Surveyed
SURFACE:	Poured Concrete Slab	TOC ELEVATION:	N/A
LOGGED BY:	Bobby Glasser (DeLisle)	SWL (from TOC):	N/A

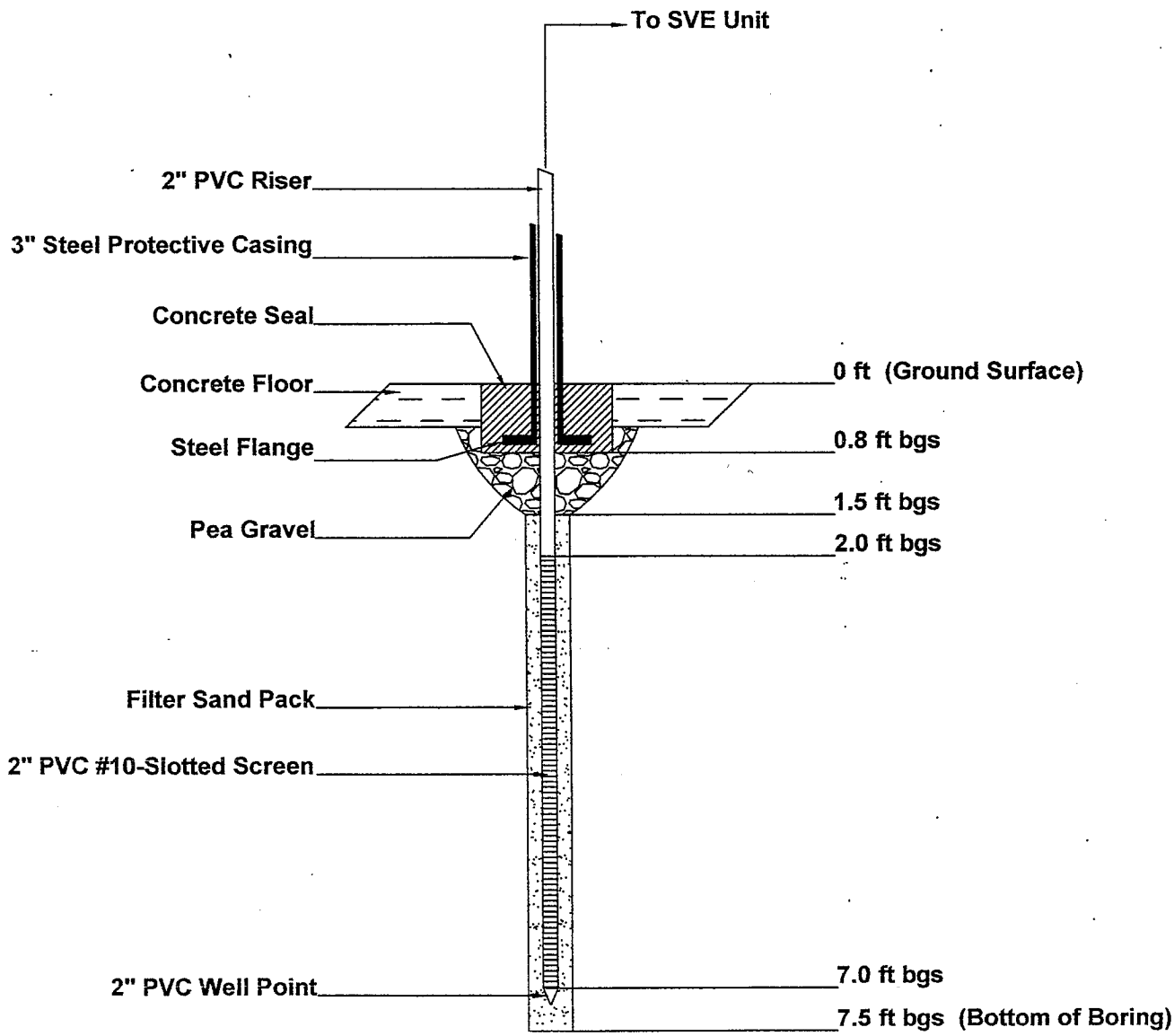

Well ID: VE-1	DeLisle Associates LTD	Project No. EN08-044

SOIL VAPOR EXTRACTION WELL LOG

PROJECT NAME:	Goodwill Industries	WELL ID:	VE-2
PROJECT NUMBER:	EN08-044	WELL DIAMETER:	2-inch
SITE LOCATION:	2700 N. Pitcher St., Kalamazoo, MI	CASING MATERIAL:	Sch-40 PVC
DATE INSTALLED:	March 25, 2009	SCREEN LENGTH:	5-foot
DRILLER/METHOD:	The Probe Geosampling - Direct Push	GROUND ELEVATION:	Not Surveyed
SURFACE:	Poured Concrete Slab	TOC ELEVATION:	N/A
LOGGED BY:	Bobby Glasser (DeLisle)	SWL (from TOC):	N/A

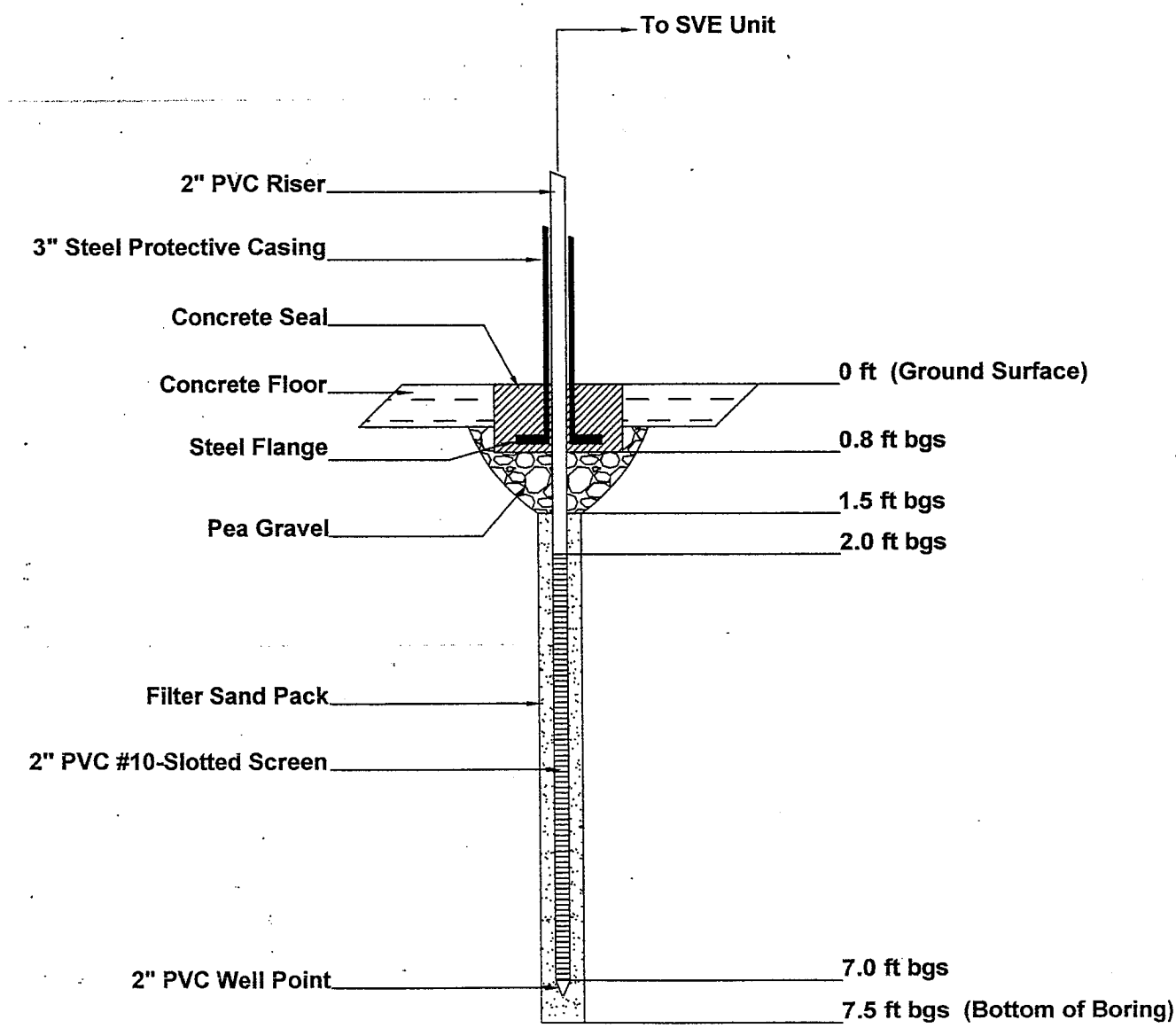

Well ID: VE-2	DeLisle Associates LTD	Project No. EN08-044

SOIL VAPOR EXTRACTION WELL LOG

PROJECT NAME: Goodwill Industries
PROJECT NUMBER: EN08-044
SITE LOCATION: 2700 N. Pitcher St., Kalamazoo, MI
DATE INSTALLED: February 18, 2009
DRILLER/METHOD: The Probe Geosampling - Direct Push
SURFACE: Poured Concrete Slab
LOGGED BY: Bobby Glasser (DeLisle)

WELL ID: VE-3
WELL DIAMETER: 2-inch
CASING MATERIAL: Sch-40 PVC
SCREEN LENGTH: 5-foot
GROUND ELEVATION: Not Surveyed
TOC ELEVATION: N/A
SWL (from TOC): N/A

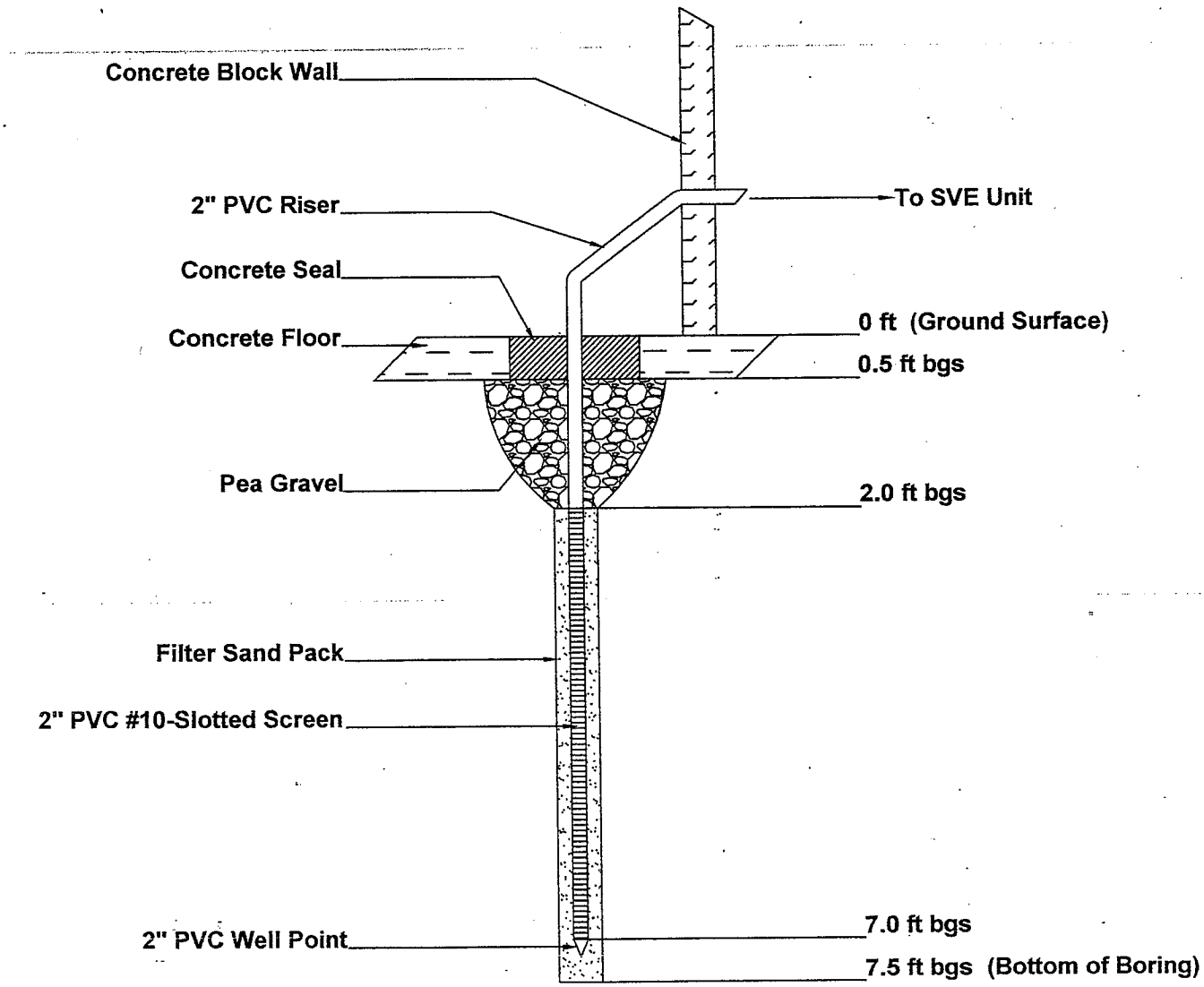

Well ID: VE-3	DeLisle Associates LTD	Project No. EN08-044

SOIL VAPOR EXTRACTION WELL LOG

PROJECT NAME: Goodwill Industries
PROJECT NUMBER: EN08-044
SITE LOCATION: 2700 N. Pitcher St., Kalamazoo, MI
DATE INSTALLED: March 26, 2009
DRILLER/METHOD: The Probe Geosampling - Direct Push
SURFACE: Poured Concrete Slab
LOGGED BY: Bobby Glasser (DeLisle)

WELL ID: VE-4
WELL DIAMETER: 2-inch
CASING MATERIAL: Sch-40 PVC
SCREEN LENGTH: 5-foot
GROUND ELEVATION: Not Surveyed
TOC ELEVATION: N/A
SWL (from TOC): N/A

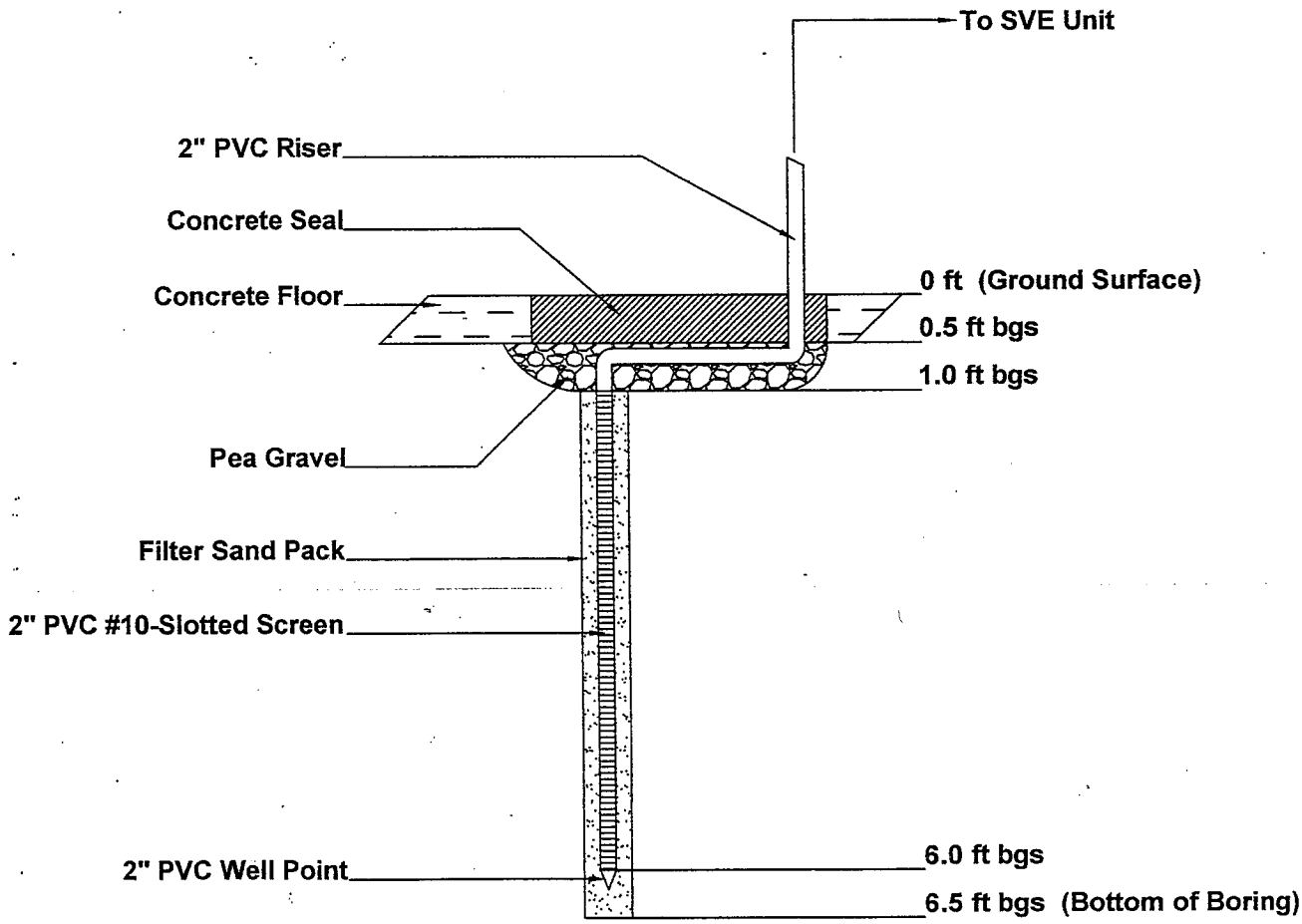

Well ID: VE-4	DeLisle Associates LTD	Project No. EN08-044

SVE AIR VENT WELL LOG

PROJECT NAME: Goodwill Industries
PROJECT NUMBER: EN08-044
SITE LOCATION: 2700 N. Pitcher St., Kalamazoo, MI
DATE INSTALLED: March 27, 2009
DRILLER/METHOD: The Probe Geosampling - Direct Push
SURFACE: Poured Concrete Slab
LOGGED BY: Bobby Glasser (DeLisle)

WELL ID: AIR VENT
WELL DIAMETER: 2-inch
CASING MATERIAL: Sch-40 PVC
SCREEN LENGTH: 2.5-foot
GROUND ELEVATION: Not Surveyed
TOC ELEVATION: N/A
SWL (from TOC): N/A

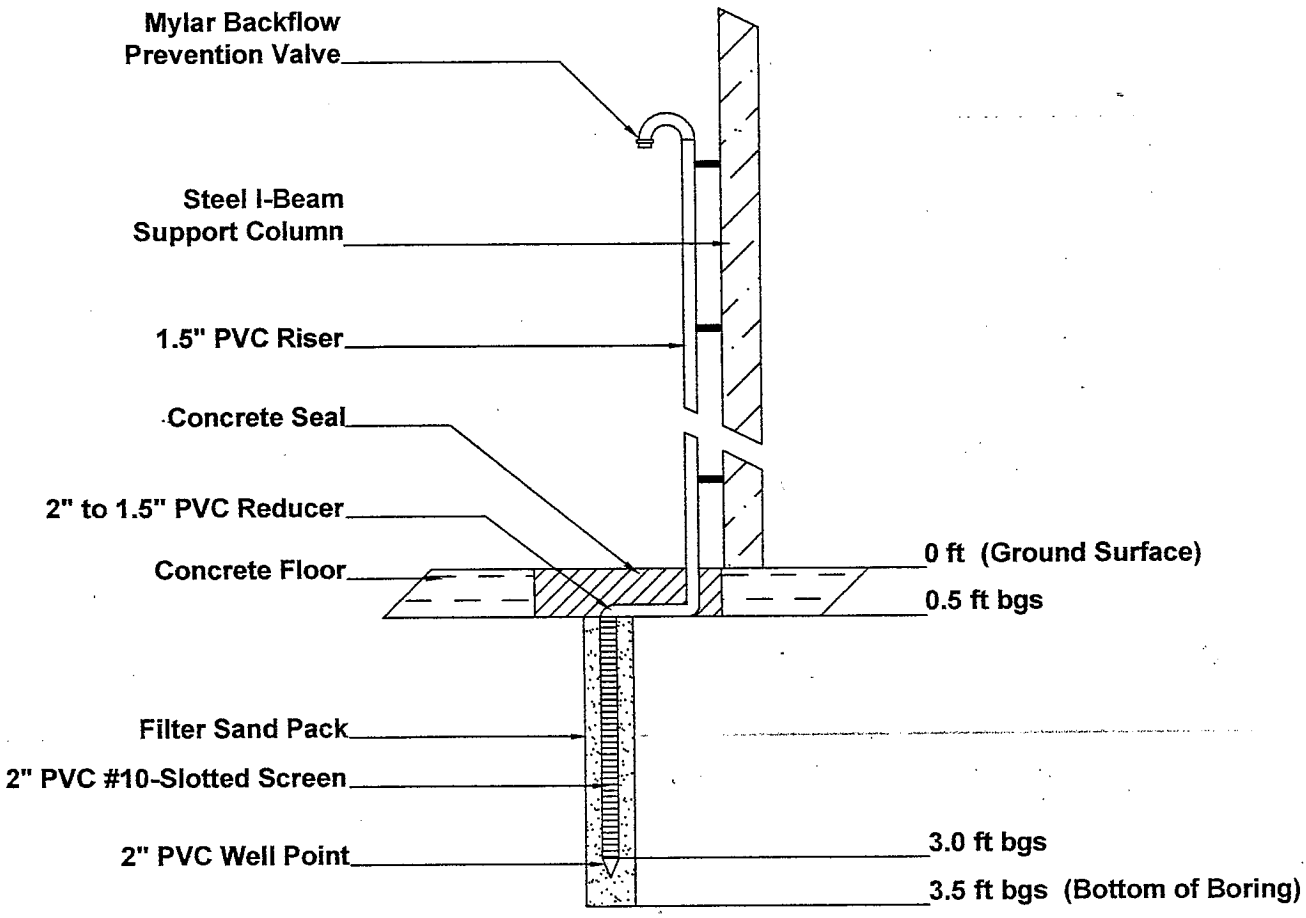

Well ID: AIR VENT	DeLisle Associates LTD	Project No. EN08-044

APPENDIX J

DeLisle Associates LTD

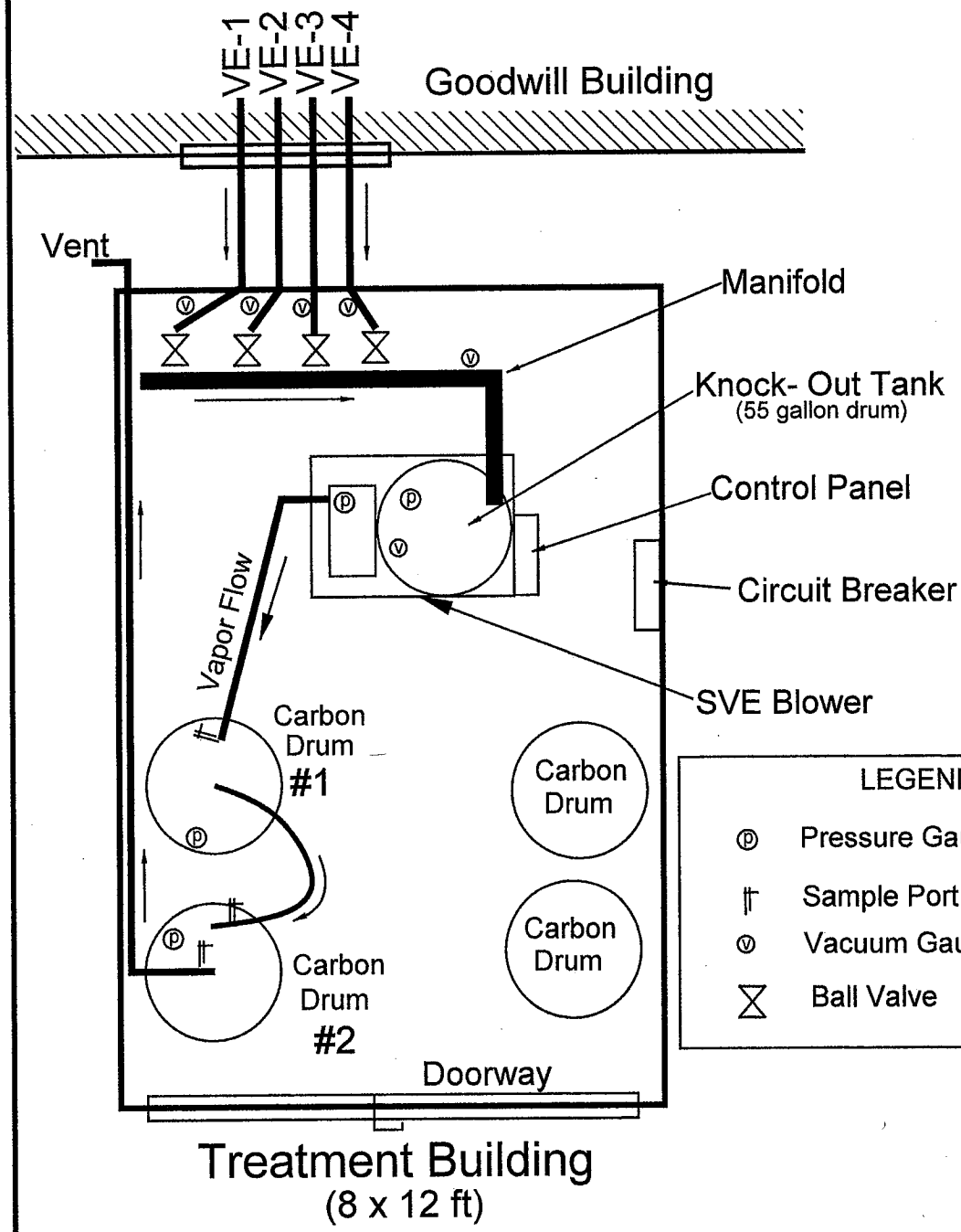

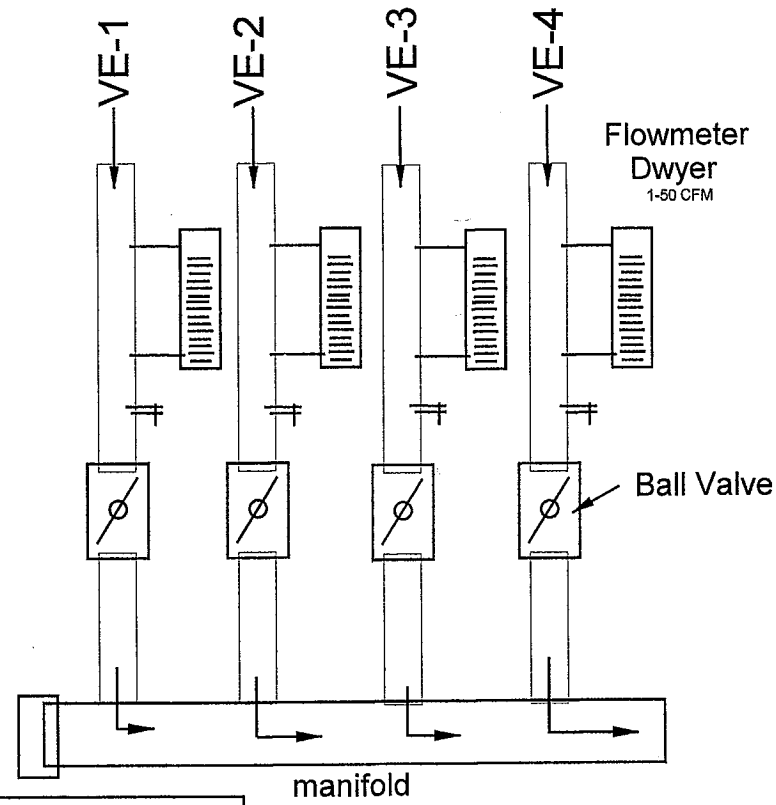

LEGEND

- Pressure Gauge
- Sample Port
- Vacuum Gauge/Flow Meter
- Ball Valve

Figure 5-SVE System Schematic
Treatment Building

Goodwill Industries
2700 North Pitcher Street
Kalamazoo, Michigan

April 2009 | Not to Scale

DeLisle Associates LTD

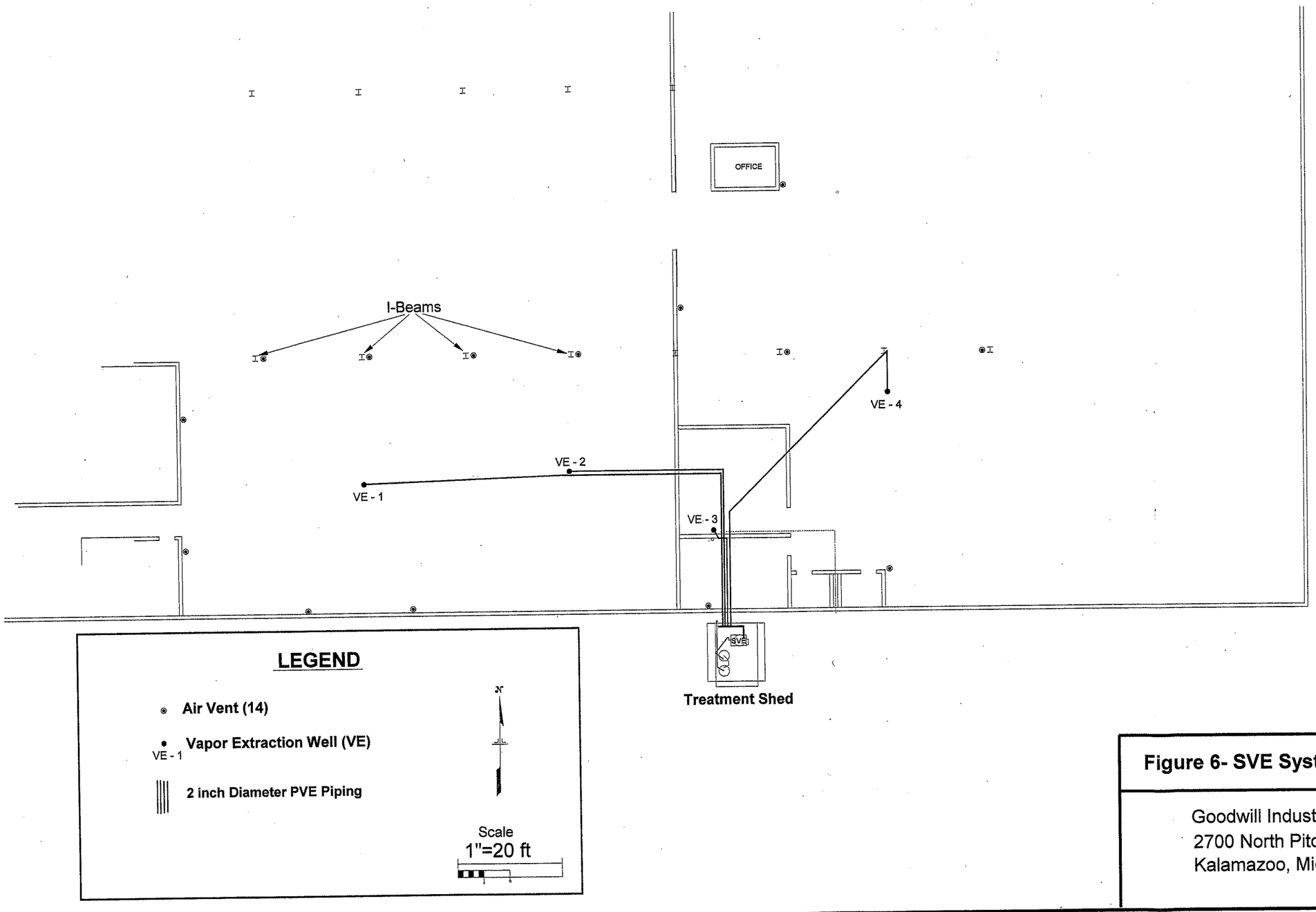

Figure 6- SVE System Well Piping Layout

Goodwill Industries of SW Michigan
2700 North Pitcher Street
Kalamazoo, Michigan

March 2009

DeLisle Associates LTD

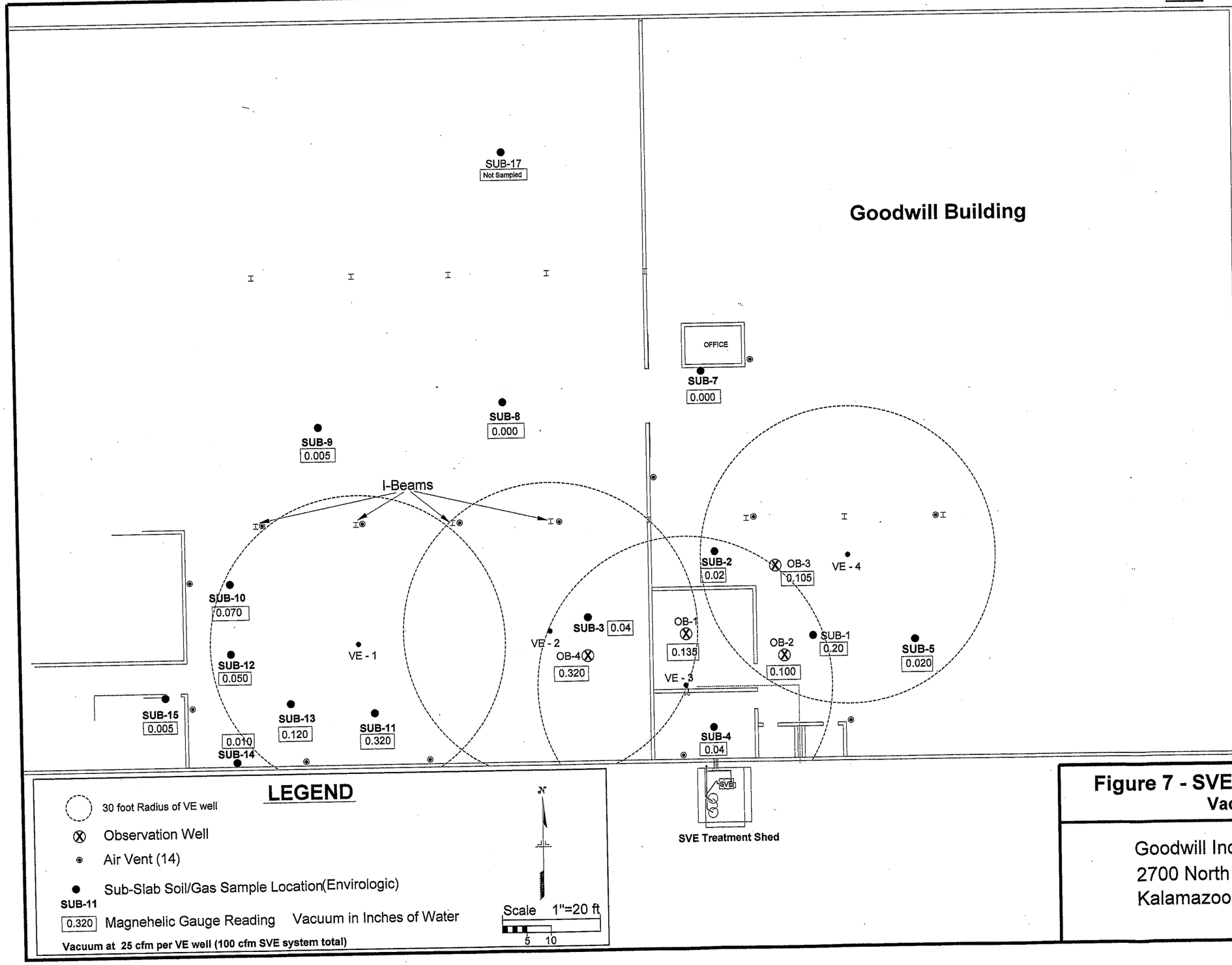

Figure 7 - SVE System Performance
Vacuum Radius Influence

Goodwill Industries of SW Michigan
2700 North Pitcher Street
Kalamazoo, Michigan

April 2, 2009

APPENDIX K

Soil Vapor Extraction System
Contaminant Recovery Estimation

Project: **Goodwill Industries**

INPUT DATA

Contamination type	Tetrachloroethene-PCE
Molicular Weight (gm/mole)	165.8
Air flow rate (cfm)	100
Concentration (ppm)	13
Operating time (hours)	24
Average soil contamination* (ppb or ug/kg)	126.64E+3
Average radial extent of contamination (feet)	30
Average vertical extent of contamination (feet)	5

*Ave Soil Conc from soil samples collected inside bldg

OUTPUT RESULTS

Contaminant recovery rate	**0.03**	pounds/hour
	0.76	pounds/day
	23	pounds/month
Total Recovery in 24 hours	**1**	pounds
Total contamination present	**190**	pounds
Expected time of recovery	**251**	days**
Estimated carbon usage	**114**	pounds/month
Estimated total carbon usage	**760**	pounds

** 24 hours per day

Soil Vapor Extraction System
Contaminant Recovery Estimation

Project: **Goodwill Industries**

Extraction Well #3

INPUT DATA

Contamination type	Trichloroethene-TCE
Molicular Weight (gm/mole)	131.4
Air flow rate (cfm)	25
Concentration (ppm)	3
Operating time (hours)	24
Average soil contamination* (ppb or ug/kg)	2.45E+3
Average radial extent of contamination (feet)	30
Average vertical extent of contamination (feet)	5

*Ave Soil Conc from soil samples collected inside bldg

OUTPUT RESULTS

Contaminant recovery rate	**0.00**	pounds/hour
	0.04	pounds/day
	1	pounds/month
Total Recovery in 24 hours	**0**	pounds
Total contamination present	**4**	pounds
Expected time of recovery	**95**	days**
Estimated carbon usage	**6**	pounds/month
Estimated total carbon usage	**15**	pounds

** 24 hours per day

Comments:
This table for Extraction Well #3. Surrounding area detected TCE in soil.

ENVIROLOGIC
TECHNOLOGIES INC.

2960 INTERSTATE PARKWAY • KALAMAZOO, MICHIGAN 49048 • 269-342-1100 • FAX 269-342-4945

SELLER'S ENVIRONMENTAL QUESTIONNAIRE AND DISCLOSURE STATEMENT

Purchaser: Brown Family Holdings

Purchaser's Telephone No.: 381-2450

Owner's Name: Goodwill Industries of Southwestern Michigan

Owner's Telephone No.: 382-0490

Subject Property: 2700 N. Pitcher, Kalamazoo, MI 49004

1. **Land Use:** Is the property or adjoining property currently used for manufacturing or industrial use? Adjoining properties include those that border the immediate site and include properties across the street from the property.

x Yes (If "Yes," please describe) ☐ No

Warehouse use

Subject Property: Warehouse use

Adjoining Property North: Corrugated manufacturing

Adjoining Property South: vacant

Adjoining Property East: vacant

Adjoining Property West: manufacturing

2. Has the property or adjoining property been used for manufacturing or industrial purposes in the past?

x Yes (If "Yes," please describe) ☐ No

Light assembly work for Kalamazoo area manufacturers and sorting clothes and other donated goods. Apparently in the 1960's and 70's, dry cleaning of some of the clothes took place.

Please provide specific detail on the type's of activities both currently and historically conducted on the subject property by Goodwill – with particular attention to historic chemical/hazardous substance use. In addition, the names and a brief description of activities of all current and historic tenants of the subject property would also be greatly appreciated.

ENVIROLOGIC TECHNOLOGIES INC.

2960 INTERSTATE PARKWAY • KALAMAZOO, MICHIGAN 49048 • 269-342-1100 • FAX 269-342-4945

Owner/Use/Date(s)

Subject Property Previous Use: Upjohn Company pre-1960

Previous Use (North): "[Click here and type]"

Previous Use (South): "[Click here and type]"

Previous Use (East): "[Click here and type]"

Previous Use (West): "[Click here and type]"

3. Are there any pesticides, automotive or industrial batteries, paints or other chemicals stored on the property or at the facility other than undamaged containers of consumer products under five gallons in total volume?

☐ Yes (If "Yes," please describe) x No

"[Click here and type]"

4. Are there any plastic or metal industrial drums (typically 55-gallon) located on the property or at the facility?

☐ Yes (If "Yes," please describe) x No

"[Click here and type]"

5. Has fill dirt been brought on to the site that could be contaminated?

☐ Yes (If "Yes," please describe) x No

"[Click here and type]"

6. Have any construction debris, substances identified as hazardous, unidentified waste materials, tires, automotive or industrial batteries or any other waste materials been dumped above grade, buried and/or burned on the site?

x Yes (If "Yes," please describe) ☐ No

On occasion, dumping has occurred on the site and that has included tires and construction debris.

7. Are there any pits, ponds or lagoons located on the property in connection with waste treatment or waste disposal?

☐ Yes (If "Yes," please describe) x No

"[Click here and type]"

ENVIROLOGIC TECHNOLOGIES INC.

2960 INTERSTATE PARKWAY • KALAMAZOO, MICHIGAN 49048 • 269-342-1100 • FAX 269-342-4945

8. Is there any soil on the property that has been obviously stained?

☐ Yes (If "Yes," please describe) x No

"[Click here and type]"

9. Are storage tanks above or underground located on the property?

☐ Yes (If "Yes," please describe) x No

"[Click here and type]"

10. Are vent pipes protruding from the ground at the property or adjacent to any structure located on the property?

☐ Yes (If "Yes," please describe) x No

"[Click here and type]"

11. Does the property discharge waste water, other than storm water, directly to a ditch or stream on or adjacent to the property?

☐ Yes (If "Yes," please describe) x No

"[Click here and type]"

12. If the property is served by a private well or non-public water system, has the well or water system been designated as contaminated by a governmental environmental or health agency?

☐ Yes (If "Yes," please describe) x No

"[Click here and type]"

13. **Asbestos:** Does the property or any buildings located on the property contain any asbestos?

x Yes (If "Yes," please describe) ☐ No

I'm pretty sure some of the pipes are wrapped in asbestos.

ENVIROLOGIC TECHNOLOGIES INC.

2960 INTERSTATE PARKWAY • KALAMAZOO, MICHIGAN 49048 • 269-342-1100 • FAX 269-342-4945

14. **Polychlorinated biphenyls (PCBs):** Have polychlorinated biphenyls been used in electrical transformers, capacitors or other equipment at the property?

☐ Yes (If "Yes," please describe) x No

"[Click here and type]"

15. Is there a transformer that is not owned by a public or private utility or group and for which there are no records indicated the absence of PCBs?

☐ Yes (If "Yes," please describe) x No

"[Click here and type]"

16. **Radon:** Has the property or any buildings located on the property been tested for radon?

☐ Yes (If "Yes," please describe) x No

"[Click here and type]"

17. **Urea-Formaldehyde:** Does the property or any buildings located on the property contain urea-formaldehyde materials?

☐ Yes (If "Yes," please describe) x No

"[Click here and type]"

18. **Lead:** Does the property or any buildings located on the property contain any lead-based paint or lead plumbing?

x Yes (If "Yes," please describe) ☐ No

I actually do not know, but given the age of the building it would be unlikely that there was not lead-based paint or lead plumbing somewhere within the facility.

ENVIROLOGIC TECHNOLOGIES INC.

2960 INTERSTATE PARKWAY • KALAMAZOO, MICHIGAN 49048 • 269-342-1100 • FAX 269-342-4945

19. **Miscellaneous:** Does the owner of the property or operator of the facility have any knowledge of environmental liens or governmental notification relating to violations of environmental laws in regards to the property or any facility located on the property?

☐ Yes (If "Yes," please describe) x No

"[Click here and type]"

20. Has the owner of the property or operator of the facility been informed of the presence of hazardous substances or environmental violations in regards to the property or the facility located on the property?

x Yes (If "Yes," please describe) ☐ No

Dry cleaning chemicals have been found beneath the building and property.

21. Are you aware of any environmental assessment of the property that indicated the presence of hazardous substances on the site or recommend further assessment of the property?

x Yes (If "Yes," please describe) ☐ No

You have all that information.

22. Are there past, current or pending lawsuits or administrative proceedings for alleged environmental damages involving the property or any owner or tenant of the property?

☐ Yes (If "Yes," please describe) x No

"[Click here and type]"

23. Does the purchase and/or sales price of this property reflect the presence of hazardous substances on the property?

x Yes (If "Yes," please describe) ☐ No

"[Click here and type]"

ENVIROLOGIC
TECHNOLOGIES INC.

2960 INTERSTATE PARKWAY • KALAMAZOO, MICHIGAN 49048 • 269-342-1100 • FAX 269-342-4945

24. **Agricultural Land:** Have pesticides, herbicides or other agricultural chemicals been stored, mixed on or applied to the property?

☐ Yes (If "Yes," please describe) x No

"[Click here and type]"

25. **This questionnaire was completed by the property owner *(required)*:**

The preparer presents that to the best of his/her knowledge, the above statements and facts are true and correct and that to the best of the preparer's knowledge, no material facts have been omitted or misstated.

Owner's (representative) Signature: _____

Owner's Printed Name: Goodwill Industries of Southwestern Michigan

Address: 420 East Alcott

Cite, State, Zip Code: Kalamazoo, MI 49004

Telephone Number: 269-382-0490

Relationship to Site: owner

ENVIROLOGIC
TECHNOLOGIES INC.

2960 INTERSTATE PARKWAY • KALAMAZOO, MICHIGAN 49048 • 269-342-1100 • FAX 269-342-4945

USER'S ENVIRONMENTAL QUESTIONNAIRE AND DISCLOSURE STATEMENT

In order to qualify for one of the Landowner Liability Protections (LLPs) offered by the Small Business Relief and Brownfield's Revitalization Act of 2001 (the "Brownfield's Amendments"), the user must provide the following information (if available) to the environmental professional. Failure to provide this information could result in a determination that "all appropriate inquiry" is not complete.

User's Name: Brown Family Holdings, LLC – Mr. Shawn Brown

User's Telephone No.: (269) 381-6984

User's Fax No.: (269) 381-6987

Subject Property: Former Goodwill Industries of SW Michigan

Property Address: 2700 N. Pitcher St.

City: Kalamazoo Township

1.0 Environmental Cleanup Liens:
Are you aware of any environmental cleanup liens against the property that are filed, recorded or unrecorded under federal, tribal, state or local law?

☐ Yes (If "Yes," please describe) X No

2.0 Activity and Land Use Limitations:
Are you aware of any activity and land use limitations, such as engineering Controls, land use restrictions or institutional controls that are in place at the site and/or have been filed, recorded or unrecorded in a registry under federal, tribal, state or local law?

☐ Yes (If "Yes," please describe) X No

3.0 Specialized Knowledge or Experience of the User:
(a) As the user of this ESA, do you have any knowledge or experience related to the property or nearby properties that could be material to any environmental conditions of this property?

☐ Yes (If "Yes," please describe) X No

ENVIROLOGIC
TECHNOLOGIES INC.

2960 INTERSTATE PARKWAY • KALAMAZOO, MICHIGAN 49048 • 269-342-1100 • FAX 269-342-4945

(b) Are you involved in the same line of business as the current or former occupants of the property or an adjoining property so that you would have specialized knowledge of the chemicals and processes used by this type of business?

☐ Yes (If "Yes," please describe) X No

4.0 Relationship of Purchase Price to Fair Market Value:

(a) Does the purchase price being paid for this property reasonably reflect the fair market value of the property?

X Yes (If "Yes," please describe) ☐ No
The price is inline with other properties listed at this time.

(b) If you conclude that there is a difference, have you considered whether the lower price is because contamination is known or believed to be present at the property?

☐ Yes (If "Yes," please describe) ☐ No

5.0 Commonly Known or Reasonably Ascertainable Information:

Are you aware of commonly known or reasonably ascertainable information about the property that would help the environmental professional to identify conditions indicative of releases or threatened releases? For example, as user,

(a) Do you know the past uses of the property? Please list: Warehouse, Assembly Facility and Dry-cleaning operation.

(b) Do you know the specific chemicals that are present or once were present on the property?

X Yes (If "Yes," please describe) ☐ No
Tetrachloroethene and there was a finding of some type of truck fuel.

(c) Do you know of spills or other chemical releases that have taken place on the property?

X Yes (If "Yes," please describe) ☐ No
Drain that leaked Tetrachloroethene and leaking fuel tank.

ENVIROLOGIC
TECHNOLOGIES INC.

2960 INTERSTATE PARKWAY • KALAMAZOO, MICHIGAN 49048 • 269-342-1100 • FAX 269-342-4945

(d) Do you know of any environmental cleanups that have taken place at the property?

X Yes (If "Yes," please describe) ☐ No
The leaking fuel tank was removed and a SVCE system has been installed.

6.0 Presence or Likely Presence of Contamination:
As the user of this ESA, and based on your knowledge and experience related to the property, are there any obvious indicators that point to the presence or likely presence of contamination at the property?

X Yes (If "Yes," please describe) ☐ No
There has been testing from DeLisle Associates and Envirologic Technologies that have listed the contaminates that Brown Family Holdings LLC have been give all reports on.

The preparer presents that to the best of his/her knowledge, the above statements and facts are true and correct and that to the best of the preparer's knowledge, no material facts have been omitted or misstated.

User's Signature: Shawn E. Brown

Owner's Printed Name: Shawn Brown

Date: 4/15/09

APPENDIX H

GROUND PENETRATING RADAR (GPR) SURVEY REPORT

March 5, 2009

Erik Peterson
Envirologic Technologies
2960 Interstate Parkway
Kalamazoo, MI 49048

Report Number: 00001063

Survey Site: Former Goodwill 2700 N Pitcher Kalamazoo MI

Survey Date: 3/2/2009

Executive Summary:

Utilize Ground Penetrating to Investigate for any possible underground storage tanks that were remaining on-site.

GPR Information and Background:

GPR has been used extensively in the past for geological and archeological exploration and mapping; however, it has only been since 2001 that GPR had the capability to image shallow targets. The system used for this project has the ability to image targets to a depth of 12 feet with an accuracy of ± 2 inches. The 400 MHz antenna broadcasts a microwave energy pulse of less than 1/6th watt at a rate of 100 ns. This energy pulse is timed as it propagates through a material noting when a return pulse arrives. The time and strength of the return pulse is captured and analyzed and interpreted graphically. This process is shown in the figure of a 1500 MHz antenna below.

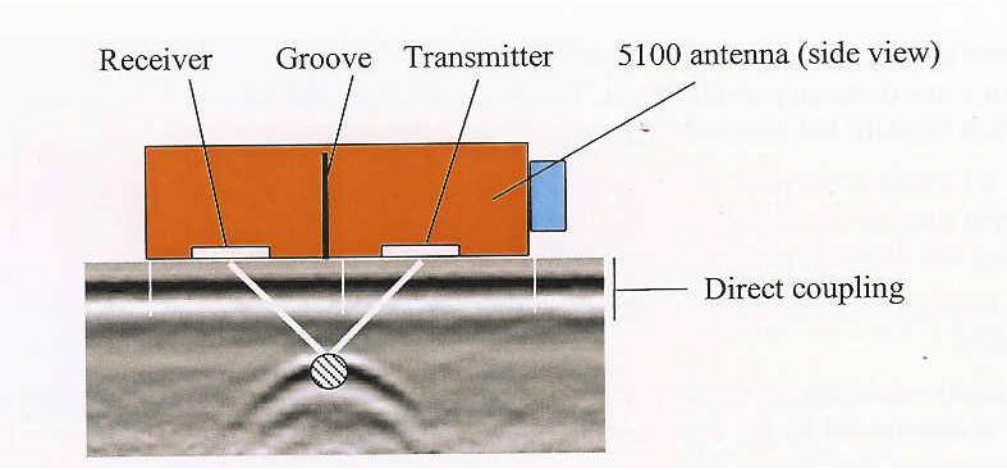

Project Layout:

Scans were performed in both the X and Y directions in 3’ to 5' intervals using a 400 MHz antenna in a 30' radius around the building at 2700 N. Pitcher.

Also, an additional two locations were scanned:
1) 80'x80' area on the northeast corner of building
2) 100'x100' area in the south parking lot where a storage building once existed

Project Results:

Results were conclusive that there was no evidence of any remaining underground storage tanks remaining on the 2700 N. Pitcher site.

As stated in the terms and conditions agreement below, these results are for informational purposes only. For further details please contact Nick Schwartz at (616) 245-3100.

Nick Schwartz
Radar Survey Technician

Terms and Conditions

- Diamond Subsurface Imaging (DSI) requires clear and uninterrupted access to the work area and expects all work available in one mobilization unless otherwise specified.

- Clear and uninterrupted access means no obstructions (equipment, vehicles, supplies, furniture, shrubbery, etc.) in the target areas to be scanned. Surface must be free of obstructions to allow the antenna to roll freely. Proposal is based on scanning the immediate area described, additional scanning may affect price. DSI may assess an hourly fee for down time occurring at no fault of its own.

- Any generated reports will be based on DSI's interpretation of the data collected and are provided solely for illustration and instructional purposes. Reports are provided only if itemized as a deliverable in this proposal.

- Due to the size and shape of the antenna, GPR scanning is limited in the area immediately adjacent to a wall. Please discuss job conditions with DSI representative. Scanning at depths greater than 12' requires mobilization of a larger antenna at additional cost.

- GPR scanning cannot be performed in areas with standing water.

- GPR scanning of soils cannot be performed immediately after rainfalls.

- Although DSI uses only state-of-the-art GPR scanning equipment and techniques, and provides ongoing GPR training for its operators, locates are only as accurate as the information imaged by the radar, i.e., GPR scanning does not see everything all the time. Every effort is made to minimize missed targets by collecting and assessing all available information relative to the job site, including layout and configuration of the area to be scanned, existing drawings, historical knowledge of personnel, and prior experience with similar sites.

- Data Collection Equipment is a commercial broadband pulsed radar system using 1500 or 400 Mhz antenna (s) with survey wheel encoder.

Disclaimer: DSI MAKES NO, AND HEREBY EXPRESSLY DISCLAIMS ALL, WARRANTIES, EXPRESS OR IMPLIED, WITH RESPECT TO THE NATURE, QUANTITY OR QUALITY OF THE SERVICES TO BE PERFORMED HEREUNDER. EXCEPT TO THE EXTENT OF ITS GROSS NEGLIGENCE OR WILLFUL MISCONDUCT, DSI SHALL NOT BE LIABLE TO THE CUSTOMER FOR ANY DAMAGES AS A RESULT OF ITS PERFORMANCE OR FAILURE TO PERFORM THE SERVICES. THE STRUCTURAL SURVEY REPORT IS BASED UPON DSI'S INTERPRETATION OF THE DATA COLLECTED AND IS PROVIDED SOLELY FOR ILLUSTRATION AND INFORMATIONAL PURPOSES. DSI IS NOT RESPONSIBLE FOR ANY LOSS OR DAMAGE CAUSED, ARISING OUT OF THE USE OF, OR RELIANCE ON THE DATA COLLECTED OR THE REPORT GENERATED.

Terms: The Contract Price, plus any additional charges or per hour charges shall be paid within thirty (30) days from invoice date. If the services to be provided hereunder (the "Services") should take longer than originally estimated by DSI because of extended coverage, or as a result of the area being surveyed by DSI not being properly prepared for the survey, etc., such additional time shall be paid to DSI at an hourly rate provided at the time of service.

1. **Warranties and Limitations of Remedies.** Without limitation of the Disclaimer on the first page hereof, (a) the parties agree that DSI did not manufacture any equipment used by DSI in the performance of the Services and, as such, DSI SHALL NOT BE RESPONSIBLE FOR, OR LIABLE FOR, ANY DAMAGES ARISING OUT OF ANY DEFECT OF SUCH EQUIPMENT; (b) DSI WARRANTS ONLY THAT IT SHALL USE THE EQUIPMENT IN THE PERFORMANCE OF THE SERVICES IN ACCORDANCE WITH INSTRUCTIONS PROVIDED FROM THE MANUFACTURER THEREOF AND FURTHER DOES NOT WARRANT OR GUARANTEE THE RESULTS OF SUCH USE OR THAT SUCH EQUIPMENT IS FUNCTIONING PROPERLY; (c) The foregoing warranty is subject to all other conditions contained herein; (d) THE FOREGOING EXPRESS WARRANTY IS IN LIEU OF ALL OTHER WARRANTIES, EXPRESS OR IMPLIED. DSI AND ITS AGENTS EXPRESSLY DISCLAIM ALL OTHER WARRANTIES, INCLUDING WITHOUT LIMITATION, THE IMPLIED WARRANTIES OF MERCHANTABILITY AND FITNESS FOR A PARTICULAR PURPOSE; and (e) CUSTOMER'S SOLE AND EXCLUSIVE REMEDY FOR BREACH OF ANY WARRANTY MADE BY DSI IN CONNECTION WITH THE PROVISIONS BY DSI OF ANY SERVICES HEREUNDER IS THE RIGHT TO RECOVER AN AMOUNT NOT TO EXCEED THE AMOUNT PAID TO DSI FOR THE SERVICES.

2. **Contract Claims Only.** CUSTOMERS CLAIMS WITH RESPECT TO THE SERVICES FURNISHED HEREUNDER SHALL BE LIMITED TO THE CONTRACTUAL WARRANTIES AND REMEDIES PROVIDED IN THIS AGREEMENT AND MAY BE BROUGHT ONLY IN AN ACTION FOR BREACH OF CONTRACT. CUSTOMER SHALL NOT MAKE ANY CLAIM AGAINST DSI BASED ON ANY THEORY OF TORT, INCLUDING BUT NOT LIMITED TO STRICT LIABILITY OR NEGLIGENCE THEORIES, except to the extent of the gross negligence or will misconduct of DSI.

3. **Liability of DSI** The total liability of DSI under this Agreement for breach of warranty, or for any other breach of the Agreement or for any claim related to services furnished by DSI under this Agreement, shall in no event exceed the amount paid to DSI by Customer hereunder. IN NO EVENT SHALL DSI OR ITS AGENTS BE LIABLE FOR SPECIAL, INCIDENTAL OR CONSEQUENTIAL DAMAGES OF ANY KIND WHATSOEVER, OR FOR THE LOSS OF PROFITS OR REVENUE, OR FOR LOSS OF USE, OR FOR ACTUAL LOSSES OR FO LOSS OF PRODUCTION OR PROGRESS OF CONSTRUCTION, WHETHER RESULTING IN ANY MANNER FROM SERVICES FURNISHED UNDER THIS AGREEMENT OR FROM DSI'S BREACH OF ANY WARRANTY OR ANY OTHER OBLIGATION OF DSI UNDER THIS AGREEMENT. THE FOREGOING LIMITATION OF DAMAGES AND DISCLAIMER OF SPECIAL, INCIDENTAL AND CONSEQUENTIAL DAMAGES SHALL APPLY TO ALL CAUSES OF ACTION WHATSOEVER ASSERTED AGAINST DSI PERTAINING TO THE PERFORMANCE OR NONPERFORMANCE OF THE SERVICES OR OF DSI'S OTHER OBLICATIONS UNDER THIS AGREEMENT.

4. **Modification and Waiver/Acceptance and Integration.** This document is intended by the parties as a final expression of their agreement and also as a complete and exclusive statement of the terms of their agreement. Without limiting the foregoing, no additional or conflicting provisions in Customer's documents shall be deemed a part hereof and DSI specifically objects to and rejects any such provisions. No affirmation, representation or warranty, however made, which is not specifically included with the agreement is a part hereof. No course of prior dealings between the parties, no usage of the trade, no representation by DSI's agent or in DSI's advertisements shall be relevant to supplement or explain any term used in the Agreement. Acceptance of or acquiescence in a course of performance rendered under the Agreement shall not be relevant to determine the meaning of the Agreement even though the accepting or acquiescing party has knowledge of the nature of the performance and opportunity for objection. Customer shall accept the Agreement, including the terms and conditions in this document if: i) Customer has signed this document or any proposal to which these terms and conditions are made applicable, ii) Customer has in any manner authorized performance of the services, iii) DSI shall perform the Services without objection by Customer, or iv) Customer has paid the purchase price or any portion thereof. The agreement can be modified or rescinded only by a writing signed by Customer and DSI No claim or right arising out of a breach of the agreement can be discharged in whole or in part by a waiver or renunciation of the claim or right unless the waiver or renunciation is supported by consideration and is in writing signed by the aggrieved party. Waiver by DSI of any breach or breaches hereunder by Customer shall not be deemed a continuing waiver of such breach nor as a waiver of or permission for any subsequent breach. Without limitation of the foregoing, the terms of this Agreement shall govern over any conflicting terms contained in any other writing related to the Services, including, but not limited to, any invoice DSI or any purchase order of Customer.

5. **Severability.** The invalidity or unenforceability of any provisions of the Agreement shall not affect any other provisions, and the Agreement shall be construed as if such invalid or unenforceable provisions were omitted.

6. **Assignment and Successor.** The Agreement shall be binding upon and insure to the benefit of the parties hereto and their heirs, personal representatives, successors and permitted assigns. Customer may not assign any of its rights or obligations under the Agreement without the prior written consent of DSI

7. **Governing Law; venue.** This agreement shall be construed in all respects under the laws of the state of Michigan without regard tot the dictates of conflicts of laws thereof and the parties agree to submit to exclusive jurisdictions and venue in the United States Federal District Court for the District of Michigan, or the District Court of Kent County, Michigan.

APPENDIX I

FIBERTEC LABORATORIES, INC. ANALYTICAL REPORTS

&

DATA VALIDATION REPORT

Fibertec
environmental
services

Monday, March 16, 2009

Fibertec Project Number: 33098
Project Identification: Kzoo Co/080503
Submittal Date: 3/6/2009

Mr. Erik Peterson
Envirologic Technologies, Inc.
2960 Interstate Parkway
Kalamazoo, MI 49048

Dear Mr. Peterson,

Thank you for selecting Fibertec Environmental Services as your analytical laboratory. The samples you submitted have been analyzed by NELAC compliant methodologies and the results compiled in the attached report. Any exceptions to compliance are noted in the report. These results apply only to those samples submitted.

If you have any questions regarding these results or if we may be of further assistance to you, please contact me at (517) 699-0345. Please note samples will be disposed of 30 days after reporting date.

Sincerely,

Daryl P. Strandbergh
Laboratory Director

DPS/kc

Enclosures

1914 Holloway Drive	*Holt, MI 48842*	*T: (517) 699-0345*	*F: (517) 699-0388*
11766 E. Grand River	*Brighton, MI 48116*	*T: (810) 220-3300*	*F: (810) 220-3311*
8660 S. Mackinaw Trail	*Cadillac, MI 49601*	*T: (231) 775-8368*	*F: (231) 775-8584*

lab@fibertec.us

Analytical Laboratory Report

Client Identification:	**Envirologic Technologies, Inc.**	Sample Matrix:	**Soil/Solid**
Fibertec Project Number:	**33098**	Sample Number:	**33098-001**

Client Sample Information

Project Identification:	**Kzoo Co**	Client Sample Description:	**GSB-1@0.5'**
Project Number:	**080503**	Client Sample Number:	**1**
Sample Date:	**3/3/2009**	Chain of Custody Number:	**82430**

Comments: **All Results Reported On Dry Weight Basis. Percent Moisture = 8.43%.**

Definitions/ Qualifiers:
A: Spike recovery or precision unusable due to dilution.
B: The analyte was detected in the associated method blank.
E: The analyte was detected at a concentration greater than the calibration range, therefore the result is estimated.
J: The concentration is an estimated value.
U: The analyte was not detected at or above the reporting limit.
X: Matrix Interference has resulted in a raised reporting limit or distorted result.
W: Results reported on a wet-weight basis.
*: Value reported is outside QA limits

Analyte	Result	Units	Report Limit	Dilution Factor	Prep Batch	Prep Date/Time	Analysis Date/Time	Analyst
Plus List (VOCs), 5035 (EPA 5035/EPA 8260B)								
Acetone	**U**	µg/kg	1100	1	VA09C11a	3/3/2009	3/11/2009	JAS
Acrylonitrile	**U**	µg/kg	110	1	VA09C11a	3/3/2009	3/11/2009	JAS
Benzene	**U**	µg/kg	55	1	VA09C11a	3/3/2009	3/11/2009	JAS
Bromobenzene	**U**	µg/kg	110	1	VA09C11a	3/3/2009	3/11/2009	JAS
Bromochloromethane	**U**	µg/kg	110	1	VA09C11a	3/3/2009	3/11/2009	JAS
Bromodichloromethane	**U**	µg/kg	110	1	VA09C11a	3/3/2009	3/11/2009	JAS
Bromoform	**U**	µg/kg	110	1	VA09C11a	3/3/2009	3/11/2009	JAS
Bromomethane	**U**	µg/kg	220	1	VA09C11a	3/3/2009	3/11/2009	JAS
2-Butanone	**U**	µg/kg	820	1	VA09C11a	3/3/2009	3/11/2009	JAS
n-Butylbenzene	**U**	µg/kg	55	1	VA09C11a	3/3/2009	3/11/2009	JAS
sec-Butylbenzene	**U**	µg/kg	55	1	VA09C11a	3/3/2009	3/11/2009	JAS
tert-Butylbenzene	**U**	µg/kg	55	1	VA09C11a	3/3/2009	3/11/2009	JAS
Carbon Disulfide	**U**	µg/kg	270	1	VA09C11a	3/3/2009	3/11/2009	JAS
Carbon Tetrachloride	**U**	µg/kg	55	1	VA09C11a	3/3/2009	3/11/2009	JAS
Chlorobenzene	**U**	µg/kg	55	1	VA09C11a	3/3/2009	3/11/2009	JAS
Chloroethane	**U**	µg/kg	270	1	VA09C11a	3/3/2009	3/11/2009	JAS
Chloroform	**U**	µg/kg	55	1	VA09C11a	3/3/2009	3/11/2009	JAS
Chloromethane	**U**	µg/kg	270	1	VA09C11a	3/3/2009	3/11/2009	JAS
2-Chlorotoluene	**U**	µg/kg	55	1	VA09C11a	3/3/2009	3/11/2009	JAS
Dibromochloromethane	**U**	µg/kg	110	1	VA09C11a	3/3/2009	3/11/2009	JAS

Analytical Laboratory Report

Client Identification:	**Envirologic Technologies, Inc.**	Sample Matrix:	**Soil/Solid**
Fibertec Project Number:	**33098**	Sample Number:	**33098-001**

Client Sample Information

Project Identification:	**Kzoo Co**	Client Sample Description:	**GSB-1@0.5'**
Project Number:	**080503**	Client Sample Number:	**1**
Sample Date:	**3/3/2009**	Chain of Custody Number:	**82430**

Comments: **All Results Reported On Dry Weight Basis. Percent Moisture = 8.43%.**

Definitions/ Qualifiers:
A: Spike recovery or precision unusable due to dilution.
B: The analyte was detected in the associated method blank.
E: The analyte was detected at a concentration greater than the calibration range, therefore the result is estimated.
J: The concentration is an estimated value.
U: The analyte was not detected at or above the reporting limit.
X: Matrix Interference has resulted in a raised reporting limit or distorted result.
W: Results reported on a wet-weight basis.
*: Value reported is outside QA limits

Analyte	Result	Units	Report Limit	Dilution Factor	Prep Batch	Prep Date/Time	Analysis Date/Time	Analyst
Plus List (VOCs), 5035 (EPA 5035/EPA 8260B)								
1,2-Dibromo-3-chloropropane	**U**	µg/kg	11	1	VA09C11a	3/3/2009	3/11/2009	JAS
Dibromomethane	**U**	µg/kg	270	1	VA09C11a	3/3/2009	3/11/2009	JAS
1,2-Dichlorobenzene	**U**	µg/kg	110	1	VA09C11a	3/3/2009	3/11/2009	JAS
1,3-Dichlorobenzene	**U**	µg/kg	110	1	VA09C11a	3/3/2009	3/11/2009	JAS
1,4-Dichlorobenzene	**U**	µg/kg	110	1	VA09C11a	3/3/2009	3/11/2009	JAS
trans-1,4-Dichloro-2-butene	**U**	µg/kg	110	1	VA09C11a	3/3/2009	3/11/2009	JAS
Dichlorodifluoromethane	**U**	µg/kg	270	1	VA09C11a	3/3/2009	3/11/2009	JAS
1,1-Dichloroethane	**U**	µg/kg	55	1	VA09C11a	3/3/2009	3/11/2009	JAS
1,2-Dichloroethane	**U**	µg/kg	55	1	VA09C11a	3/3/2009	3/11/2009	JAS
1,1-Dichloroethene	**U**	µg/kg	55	1	VA09C11a	3/3/2009	3/11/2009	JAS
cis-1,2-Dichloroethene	**U**	µg/kg	55	1	VA09C11a	3/3/2009	3/11/2009	JAS
trans-1,2-Dichloroethene	**U**	µg/kg	55	1	VA09C11a	3/3/2009	3/11/2009	JAS
1,2-Dichloropropane	**U**	µg/kg	55	1	VA09C11a	3/3/2009	3/11/2009	JAS
cis-1,3-Dichloropropene	**U**	µg/kg	55	1	VA09C11a	3/3/2009	3/11/2009	JAS
trans-1,3-Dichloropropene	**U**	µg/kg	55	1	VA09C11a	3/3/2009	3/11/2009	JAS
Diethyl Ether	**U**	µg/kg	220	1	VA09C11a	3/3/2009	3/11/2009	JAS
Ethylbenzene	**U**	µg/kg	55	1	VA09C11a	3/3/2009	3/11/2009	JAS
Ethylene Dibromide	**U**	µg/kg	22	1	VA09C11a	3/3/2009	3/11/2009	JAS
Hexachloroethane	**U**	µg/kg	110	1	VA09C11a	3/3/2009	3/11/2009	JAS
2-Hexanone	**U**	µg/kg	2700	1	VA09C11a	3/3/2009	3/11/2009	JAS

Analytical Laboratory Report

Client Identification:	**Envirologic Technologies, Inc.**	Sample Matrix:	**Soil/Solid**
Fibertec Project Number:	**33098**	Sample Number:	**33098-001**

Client Sample Information

Project Identification:	**Kzoo Co**	Client Sample Description:	**GSB-1@0.5'**
Project Number:	**080503**	Client Sample Number:	**1**
Sample Date:	**3/3/2009**	Chain of Custody Number:	**82430**

Comments: **All Results Reported On Dry Weight Basis. Percent Moisture = 8.43%.**

Definitions/ Qualifiers:
A: Spike recovery or precision unusable due to dilution.
B: The analyte was detected in the associated method blank.
E: The analyte was detected at a concentration greater than the calibration range, therefore the result is estimated.
J: The concentration is an estimated value.
U: The analyte was not detected at or above the reporting limit.
X: Matrix Interference has resulted in a raised reporting limit or distorted result.
W: Results reported on a wet-weight basis.
*: Value reported is outside QA limits

Analyte	Result	Units	Report Limit	Dilution Factor	Prep Batch	Prep Date/Time	Analysis Date/Time	Analyst
Plus List (VOCs), 5035 (EPA 5035/EPA 8260B)								
Isopropylbenzene	**U**	µg/kg	270	1	VA09C11a	3/3/2009	3/11/2009	JAS
4-Methyl-2-pentanone	**U**	µg/kg	2700	1	VA09C11a	3/3/2009	3/11/2009	JAS
MTBE	**U**	µg/kg	270	1	VA09C11a	3/3/2009	3/11/2009	JAS
Methyl Iodide	**U**	µg/kg	110	1	VA09C11a	3/3/2009	3/11/2009	JAS
Methylene Chloride	**U**	µg/kg	110	1	VA09C11a	3/3/2009	3/11/2009	JAS
Naphthalene	**U**	µg/kg	360	1	VA09C11a	3/3/2009	3/11/2009	JAS
n-Propylbenzene	**U**	µg/kg	110	1	VA09C11a	3/3/2009	3/11/2009	JAS
Styrene	**U**	µg/kg	55	1	VA09C11a	3/3/2009	3/11/2009	JAS
1,1,1,2-Tetrachloroethane	**U**	µg/kg	110	1	VA09C11a	3/3/2009	3/11/2009	JAS
1,1,2,2-Tetrachloroethane	**U**	µg/kg	55	1	VA09C11a	3/3/2009	3/11/2009	JAS
Tetrachloroethene	**U**	µg/kg	55	1	VA09C11a	3/3/2009	3/11/2009	JAS
Toluene	**U**	µg/kg	110	1	VA09C11a	3/3/2009	3/11/2009	JAS
1,2,4-Trichlorobenzene	**U**	µg/kg	360	1	VA09C11a	3/3/2009	3/11/2009	JAS
1,1,1-Trichloroethane	**U**	µg/kg	55	1	VA09C11a	3/3/2009	3/11/2009	JAS
1,1,2-Trichloroethane	**U**	µg/kg	55	1	VA09C11a	3/3/2009	3/11/2009	JAS
Trichloroethene	**U**	µg/kg	55	1	VA09C11a	3/3/2009	3/11/2009	JAS
Trichlorofluoromethane	**U**	µg/kg	110	1	VA09C11a	3/3/2009	3/11/2009	JAS
1,2,3-Trichloropropane	**U**	µg/kg	110	1	VA09C11a	3/3/2009	3/11/2009	JAS
1,2,3-Trimethylbenzene	**U**	µg/kg	110	1	VA09C11a	3/3/2009	3/11/2009	JAS
1,2,4-Trimethylbenzene	**U**	µg/kg	110	1	VA09C11a	3/3/2009	3/11/2009	JAS

Analytical Laboratory Report

Client Identification:	**Envirologic Technologies, Inc.**	Sample Matrix:	**Soil/Solid**
Fibertec Project Number:	**33098**	Sample Number:	**33098-001**

Client Sample Information

Project Identification:	**Kzoo Co**	Client Sample Description:	**GSB-1@0.5'**
Project Number:	**080503**	Client Sample Number:	**1**
Sample Date:	**3/3/2009**	Chain of Custody Number:	**82430**

Comments: **All Results Reported On Dry Weight Basis. Percent Moisture = 8.43%.**

Definitions/ Qualifiers:

A: Spike recovery or precision unusable due to dilution.
B: The analyte was detected in the associated method blank.
E: The analyte was detected at a concentration greater than the calibration range, therefore the result is estimated.
J: The concentration is an estimated value.
U: The analyte was not detected at or above the reporting limit.
X: Matrix Interference has resulted in a raised reporting limit or distorted result.
W: Results reported on a wet-weight basis.
*: Value reported is outside QA limits

Analyte	Result	Units	Report Limit	Dilution Factor	Prep Batch	Prep Date/Time	Analysis Date/Time	Analyst
Plus List (VOCs), 5035 (EPA 5035/EPA 8260B)								
1,3,5-Trimethylbenzene	**U**	µg/kg	110	1	VA09C11a	3/3/2009	3/11/2009	JAS
Vinyl Chloride	**U**	µg/kg	44	1	VA09C11a	3/3/2009	3/11/2009	JAS
Xylenes	**U**	µg/kg	160	1	VA09C11a	3/3/2009	3/11/2009	JAS

Analytical Laboratory Report

Client Identification:	**Envirologic Technologies, Inc.**	Sample Matrix:	**Soil/Solid**
Fibertec Project Number:	**33098**	Sample Number:	**33098-001A**

Client Sample Information

Project Identification:	**Kzoo Co**	Client Sample Description:	**GSB-1@0.5'**
Project Number:	**080503**	Client Sample Number:	**1**
Sample Date:	**3/3/2009**	Chain of Custody Number:	**82430**

Comments: **All Results Reported On Dry Weight Basis. Percent Moisture = 8.43%.**

Definitions/ Qualifiers:

A: Spike recovery or precision unusable due to dilution.
B: The analyte was detected in the associated method blank.
E: The analyte was detected at a concentration greater than the calibration range, therefore the result is estimated.
J: The concentration is an estimated value.
U: The analyte was not detected at or above the reporting limit.
X: Matrix Interference has resulted in a raised reporting limit or distorted result.
W: Results reported on a wet-weight basis.
*: Value reported is outside QA limits

Analyte	Result	Units	Report Limit	Dilution Factor	Prep Batch	Prep Date/Time	Analysis Date/Time	Analyst
Dry Weight Determination (ASTM D 2974-87)								
Percent Moisture (Water Content)	**8.4**	%	0.1	1	MC090309	3/9/2009	3/10/2009	BMG
Trace Elements by ICP/MS (EPA 3050B/EPA 6020)								
Aluminum	**4200000**	µg/kg	1000	1	PT09C10D	3/10/2009	3/12/2009	MAP
Michigan 10 Elements by ICP/MS (EPA 3050B/EPA 6020)								
Arsenic	**6000**	µg/kg	100	1	PT09C10D	3/10/2009	3/12/2009	MAP
Barium	**42000**	µg/kg	1000	1	PT09C10D	3/10/2009	3/12/2009	MAP
Cadmium	**93**	µg/kg	50	1	PT09C10D	3/10/2009	3/12/2009	MAP
Chromium	**10000**	µg/kg	500	1	PT09C10D	3/10/2009	3/12/2009	MAP
Copper	**9900**	µg/kg	1000	1	PT09C10D	3/10/2009	3/12/2009	MAP
Lead	**6900**	µg/kg	1000	1	PT09C10D	3/10/2009	3/12/2009	MAP
Selenium	**U**	µg/kg	200	1	PT09C10D	3/10/2009	3/13/2009	MAP
Silver	**U**	µg/kg	100	1	PT09C10D	3/10/2009	3/12/2009	MAP
Zinc	**21000**	µg/kg	1000	1	PT09C10D	3/10/2009	3/12/2009	MAP
Mercury by CVAAS (EPA 7471A)								
Mercury	**U**	µg/kg	55	1	PM09C10B	3/10/2009	3/10/2009	ALM
Polynuclear Aromatic Hydrocarbons (PNAs) (EPA 3550B/EPA 8270C)								
Acenaphthene	**U**	µg/kg	360	1	PS09C11D	3/11/2009	3/12/2009	BDA
Acenaphthylene	**U**	µg/kg	360	1	PS09C11D	3/11/2009	3/12/2009	BDA
Anthracene	**U**	µg/kg	360	1	PS09C11D	3/11/2009	3/12/2009	BDA
Benzo(a)anthracene	**U**	µg/kg	360	1	PS09C11D	3/11/2009	3/12/2009	BDA
Benzo(a)pyrene	**U**	µg/kg	360	1	PS09C11D	3/11/2009	3/12/2009	BDA

Analytical Laboratory Report

Client Identification:	**Envirologic Technologies, Inc.**	Sample Matrix:	**Soil/Solid**
Fibertec Project Number:	**33098**	Sample Number:	**33098-001A**

Client Sample Information

Project Identification:	**Kzoo Co**	Client Sample Description:	**GSB-1@0.5'**
Project Number:	**080503**	Client Sample Number:	**1**
Sample Date:	**3/3/2009**	Chain of Custody Number:	**82430**

Comments: **All Results Reported On Dry Weight Basis. Percent Moisture = 8.43%.**

Definitions/ Qualifiers:

A: Spike recovery or precision unusable due to dilution.
B: The analyte was detected in the associated method blank.
E: The analyte was detected at a concentration greater than the calibration range, therefore the result is estimated.
J: The concentration is an estimated value.
U: The analyte was not detected at or above the reporting limit.
X: Matrix Interference has resulted in a raised reporting limit or distorted result.
W: Results reported on a wet-weight basis.
*: Value reported is outside QA limits

Analyte	Result	Units	Report Limit	Dilution Factor	Prep Batch	Prep Date/Time	Analysis Date/Time	Analyst
Polynuclear Aromatic Hydrocarbons (PNAs) (EPA 3550B/EPA 8270C)								
Benzo(b)fluoranthene	**U**	µg/kg	360	1	PS09C11D	3/11/2009	3/12/2009	BDA
Benzo(ghi)perylene	**U**	µg/kg	360	1	PS09C11D	3/11/2009	3/12/2009	BDA
Benzo(k)fluoranthene	**U**	µg/kg	360	1	PS09C11D	3/11/2009	3/12/2009	BDA
Chrysene	**U**	µg/kg	360	1	PS09C11D	3/11/2009	3/12/2009	BDA
Dibenzo(a,h)anthracene	**U**	µg/kg	360	1	PS09C11D	3/11/2009	3/12/2009	BDA
Fluoranthene	**U**	µg/kg	360	1	PS09C11D	3/11/2009	3/12/2009	BDA
Fluorene	**U**	µg/kg	360	1	PS09C11D	3/11/2009	3/12/2009	BDA
Indeno(1,2,3-cd)pyrene	**U**	µg/kg	360	1	PS09C11D	3/11/2009	3/12/2009	BDA
2-Methylnaphthalene	**U**	µg/kg	360	1	PS09C11D	3/11/2009	3/12/2009	BDA
Phenanthrene	**U**	µg/kg	360	1	PS09C11D	3/11/2009	3/12/2009	BDA
Pyrene	**U**	µg/kg	360	1	PS09C11D	3/11/2009	3/12/2009	BDA

Analytical Laboratory Report

Client Identification:	**Envirologic Technologies, Inc.**	Sample Matrix:	**Soil/Solid**
Fibertec Project Number:	**33098**	Sample Number:	**33098-002**

Client Sample Information

Project Identification:	**Kzoo Co**	Client Sample Description:	**GSB-2@0.5'**
Project Number:	**080503**	Client Sample Number:	**2**
Sample Date:	**3/3/2009**	Chain of Custody Number:	**82430**

Comments: **All Results Reported On Dry Weight Basis. Percent Moisture = 9.96%.**

Definitions/ Qualifiers:
A: Spike recovery or precision unusable due to dilution.
B: The analyte was detected in the associated method blank.
E: The analyte was detected at a concentration greater than the calibration range, therefore the result is estimated.
J: The concentration is an estimated value.
U: The analyte was not detected at or above the reporting limit.
X: Matrix Interference has resulted in a raised reporting limit or distorted result.
W: Results reported on a wet-weight basis.
*: Value reported is outside QA limits

Analyte	Result	Units	Report Limit	Dilution Factor	Prep Batch	Prep Date/Time	Analysis Date/Time	Analyst
Plus List (VOCs), 5035 (EPA 5035/EPA 8260B)								
Acetone	**U**	µg/kg	1100	1	VA09C11a	3/3/2009	3/11/2009	JAS
Acrylonitrile	**U**	µg/kg	110	1	VA09C11a	3/3/2009	3/11/2009	JAS
Benzene	**U**	µg/kg	56	1	VA09C11a	3/3/2009	3/11/2009	JAS
Bromobenzene	**U**	µg/kg	110	1	VA09C11a	3/3/2009	3/11/2009	JAS
Bromochloromethane	**U**	µg/kg	110	1	VA09C11a	3/3/2009	3/11/2009	JAS
Bromodichloromethane	**U**	µg/kg	110	1	VA09C11a	3/3/2009	3/11/2009	JAS
Bromoform	**U**	µg/kg	110	1	VA09C11a	3/3/2009	3/11/2009	JAS
Bromomethane	**U**	µg/kg	220	1	VA09C11a	3/3/2009	3/11/2009	JAS
2-Butanone	**U**	µg/kg	830	1	VA09C11a	3/3/2009	3/11/2009	JAS
n-Butylbenzene	**U**	µg/kg	56	1	VA09C11a	3/3/2009	3/11/2009	JAS
sec-Butylbenzene	**U**	µg/kg	56	1	VA09C11a	3/3/2009	3/11/2009	JAS
tert-Butylbenzene	**U**	µg/kg	56	1	VA09C11a	3/3/2009	3/11/2009	JAS
Carbon Disulfide	**U**	µg/kg	280	1	VA09C11a	3/3/2009	3/11/2009	JAS
Carbon Tetrachloride	**U**	µg/kg	56	1	VA09C11a	3/3/2009	3/11/2009	JAS
Chlorobenzene	**U**	µg/kg	56	1	VA09C11a	3/3/2009	3/11/2009	JAS
Chloroethane	**U**	µg/kg	280	1	VA09C11a	3/3/2009	3/11/2009	JAS
Chloroform	**U**	µg/kg	56	1	VA09C11a	3/3/2009	3/11/2009	JAS
Chloromethane	**U**	µg/kg	280	1	VA09C11a	3/3/2009	3/11/2009	JAS
2-Chlorotoluene	**U**	µg/kg	56	1	VA09C11a	3/3/2009	3/11/2009	JAS
Dibromochloromethane	**U**	µg/kg	110	1	VA09C11a	3/3/2009	3/11/2009	JAS

Analytical Laboratory Report

Client Identification:	**Envirologic Technologies, Inc.**	Sample Matrix:	**Soil/Solid**
Fibertec Project Number:	**33098**	Sample Number:	**33098-002**

Client Sample Information

Project Identification:	**Kzoo Co**	Client Sample Description:	**GSB-2@0.5'**
Project Number:	**080503**	Client Sample Number:	**2**
Sample Date:	**3/3/2009**	Chain of Custody Number:	**82430**

Comments: **All Results Reported On Dry Weight Basis. Percent Moisture = 9.96%.**

Definitions/ Qualifiers:
A: Spike recovery or precision unusable due to dilution.
B: The analyte was detected in the associated method blank.
E: The analyte was detected at a concentration greater than the calibration range, therefore the result is estimated.
J: The concentration is an estimated value.
U: The analyte was not detected at or above the reporting limit.
X: Matrix Interference has resulted in a raised reporting limit or distorted result.
W: Results reported on a wet-weight basis.
*: Value reported is outside QA limits

Analyte	Result	Units	Report Limit	Dilution Factor	Prep Batch	Prep Date/Time	Analysis Date/Time	Analyst
Plus List (VOCs), 5035 (EPA 5035/EPA 8260B)								
1,2-Dibromo-3-chloropropane	**U**	µg/kg	11	1	VA09C11a	3/3/2009	3/11/2009	JAS
Dibromomethane	**U**	µg/kg	280	1	VA09C11a	3/3/2009	3/11/2009	JAS
1,2-Dichlorobenzene	**U**	µg/kg	110	1	VA09C11a	3/3/2009	3/11/2009	JAS
1,3-Dichlorobenzene	**U**	µg/kg	110	1	VA09C11a	3/3/2009	3/11/2009	JAS
1,4-Dichlorobenzene	**U**	µg/kg	110	1	VA09C11a	3/3/2009	3/11/2009	JAS
trans-1,4-Dichloro-2-butene	**U**	µg/kg	110	1	VA09C11a	3/3/2009	3/11/2009	JAS
Dichlorodifluoromethane	**U**	µg/kg	280	1	VA09C11a	3/3/2009	3/11/2009	JAS
1,1-Dichloroethane	**U**	µg/kg	56	1	VA09C11a	3/3/2009	3/11/2009	JAS
1,2-Dichloroethane	**U**	µg/kg	56	1	VA09C11a	3/3/2009	3/11/2009	JAS
1,1-Dichloroethene	**U**	µg/kg	56	1	VA09C11a	3/3/2009	3/11/2009	JAS
cis-1,2-Dichloroethene	**U**	µg/kg	56	1	VA09C11a	3/3/2009	3/11/2009	JAS
trans-1,2-Dichloroethene	**U**	µg/kg	56	1	VA09C11a	3/3/2009	3/11/2009	JAS
1,2-Dichloropropane	**U**	µg/kg	56	1	VA09C11a	3/3/2009	3/11/2009	JAS
cis-1,3-Dichloropropene	**U**	µg/kg	56	1	VA09C11a	3/3/2009	3/11/2009	JAS
trans-1,3-Dichloropropene	**U**	µg/kg	56	1	VA09C11a	3/3/2009	3/11/2009	JAS
Diethyl Ether	**U**	µg/kg	220	1	VA09C11a	3/3/2009	3/11/2009	JAS
Ethylbenzene	**U**	µg/kg	56	1	VA09C11a	3/3/2009	3/11/2009	JAS
Ethylene Dibromide	**U**	µg/kg	22	1	VA09C11a	3/3/2009	3/11/2009	JAS
Hexachloroethane	**U**	µg/kg	110	1	VA09C11a	3/3/2009	3/11/2009	JAS
2-Hexanone	**U**	µg/kg	2800	1	VA09C11a	3/3/2009	3/11/2009	JAS

Analytical Laboratory Report

Client Identification:	**Envirologic Technologies, Inc.**	Sample Matrix:	**Soil/Solid**
Fibertec Project Number:	**33098**	Sample Number:	**33098-002**

Client Sample Information

Project Identification:	**Kzoo Co**	Client Sample Description:	**GSB-2@0.5'**
Project Number:	**080503**	Client Sample Number:	**2**
Sample Date:	**3/3/2009**	Chain of Custody Number:	**82430**

Comments: **All Results Reported On Dry Weight Basis. Percent Moisture = 9.96%.**

Definitions/ Qualifiers:
A: Spike recovery or precision unusable due to dilution.
B: The analyte was detected in the associated method blank.
E: The analyte was detected at a concentration greater than the calibration range, therefore the result is estimated.
J: The concentration is an estimated value.
U: The analyte was not detected at or above the reporting limit.
X: Matrix Interference has resulted in a raised reporting limit or distorted result.
W: Results reported on a wet-weight basis.
*: Value reported is outside QA limits

Analyte	Result	Units	Report Limit	Dilution Factor	Prep Batch	Prep Date/Time	Analysis Date/Time	Analyst
Plus List (VOCs), 5035 (EPA 5035/EPA 8260B)								
Isopropylbenzene	**U**	µg/kg	280	1	VA09C11a	3/3/2009	3/11/2009	JAS
4-Methyl-2-pentanone	**U**	µg/kg	2800	1	VA09C11a	3/3/2009	3/11/2009	JAS
MTBE	**U**	µg/kg	280	1	VA09C11a	3/3/2009	3/11/2009	JAS
Methyl Iodide	**U**	µg/kg	110	1	VA09C11a	3/3/2009	3/11/2009	JAS
Methylene Chloride	**U**	µg/kg	110	1	VA09C11a	3/3/2009	3/11/2009	JAS
Naphthalene	**U**	µg/kg	370	1	VA09C11a	3/3/2009	3/11/2009	JAS
n-Propylbenzene	**U**	µg/kg	110	1	VA09C11a	3/3/2009	3/11/2009	JAS
Styrene	**U**	µg/kg	56	1	VA09C11a	3/3/2009	3/11/2009	JAS
1,1,1,2-Tetrachloroethane	**U**	µg/kg	110	1	VA09C11a	3/3/2009	3/11/2009	JAS
1,1,2,2-Tetrachloroethane	**U**	µg/kg	56	1	VA09C11a	3/3/2009	3/11/2009	JAS
Tetrachloroethene	**U**	µg/kg	56	1	VA09C11a	3/3/2009	3/11/2009	JAS
Toluene	**U**	µg/kg	110	1	VA09C11a	3/3/2009	3/11/2009	JAS
1,2,4-Trichlorobenzene	**U**	µg/kg	370	1	VA09C11a	3/3/2009	3/11/2009	JAS
1,1,1-Trichloroethane	**U**	µg/kg	56	1	VA09C11a	3/3/2009	3/11/2009	JAS
1,1,2-Trichloroethane	**U**	µg/kg	56	1	VA09C11a	3/3/2009	3/11/2009	JAS
Trichloroethene	**U**	µg/kg	56	1	VA09C11a	3/3/2009	3/11/2009	JAS
Trichlorofluoromethane	**U**	µg/kg	110	1	VA09C11a	3/3/2009	3/11/2009	JAS
1,2,3-Trichloropropane	**U**	µg/kg	110	1	VA09C11a	3/3/2009	3/11/2009	JAS
1,2,3-Trimethylbenzene	**U**	µg/kg	110	1	VA09C11a	3/3/2009	3/11/2009	JAS
1,2,4-Trimethylbenzene	**U**	µg/kg	110	1	VA09C11a	3/3/2009	3/11/2009	JAS

Analytical Laboratory Report

Client Identification:	**Envirologic Technologies, Inc.**	Sample Matrix:	**Soil/Solid**
Fibertec Project Number:	**33098**	Sample Number:	**33098-002**

Client Sample Information

Project Identification:	**Kzoo Co**	Client Sample Description:	**GSB-2@0.5'**
Project Number:	**080503**	Client Sample Number:	**2**
Sample Date:	**3/3/2009**	Chain of Custody Number:	**82430**

Comments: **All Results Reported On Dry Weight Basis. Percent Moisture = 9.96%.**

Definitions/ Qualifiers:

A: Spike recovery or precision unusable due to dilution.
B: The analyte was detected in the associated method blank.
E: The analyte was detected at a concentration greater than the calibration range, therefore the result is estimated.
J: The concentration is an estimated value.
U: The analyte was not detected at or above the reporting limit.
X: Matrix Interference has resulted in a raised reporting limit or distorted result.
W: Results reported on a wet-weight basis.
*: Value reported is outside QA limits

Analyte	Result	Units	Report Limit	Dilution Factor	Prep Batch	Prep Date/Time	Analysis Date/Time	Analyst
Plus List (VOCs), 5035 (EPA 5035/EPA 8260B)								
1,3,5-Trimethylbenzene	**U**	µg/kg	110	1	VA09C11a	3/3/2009	3/11/2009	JAS
Vinyl Chloride	**U**	µg/kg	44	1	VA09C11a	3/3/2009	3/11/2009	JAS
Xylenes	**U**	µg/kg	170	1	VA09C11a	3/3/2009	3/11/2009	JAS

Analytical Laboratory Report

Client Identification:	**Envirologic Technologies, Inc.**	Sample Matrix:	**Soil/Solid**
Fibertec Project Number:	**33098**	Sample Number:	**33098-002A**

Client Sample Information

Project Identification:	**Kzoo Co**	Client Sample Description:	**GSB-2@0.5'**
Project Number:	**080503**	Client Sample Number:	**2**
Sample Date:	**3/3/2009**	Chain of Custody Number:	**82430**

Comments: **All Results Reported On Dry Weight Basis. Percent Moisture = 9.96%.**

Definitions/ Qualifiers:

A: Spike recovery or precision unusable due to dilution.
B: The analyte was detected in the associated method blank.
E: The analyte was detected at a concentration greater than the calibration range, therefore the result is estimated.
J: The concentration is an estimated value.
U: The analyte was not detected at or above the reporting limit.
X: Matrix Interference has resulted in a raised reporting limit or distorted result.
W: Results reported on a wet-weight basis.
*: Value reported is outside QA limits

Analyte	Result	Units	Report Limit	Dilution Factor	Prep Batch	Prep Date/Time	Analysis Date/Time	Analyst
Dry Weight Determination (ASTM D 2974-87)								
Percent Moisture (Water Content)	**10.0**	%	0.1	1	MC090309	3/9/2009	3/10/2009	BMG
Trace Elements by ICP/MS (EPA 3050B/EPA 6020)								
Aluminum	**5800000**	µg/kg	1000	1	PT09C10D	3/10/2009	3/12/2009	MAP
Michigan 10 Elements by ICP/MS (EPA 3050B/EPA 6020)								
Arsenic	**7800**	µg/kg	100	1	PT09C10D	3/10/2009	3/12/2009	MAP
Barium	**56000**	µg/kg	1000	1	PT09C10D	3/10/2009	3/12/2009	MAP
Cadmium	**99**	µg/kg	50	1	PT09C10D	3/10/2009	3/12/2009	MAP
Chromium	**9300**	µg/kg	500	1	PT09C10D	3/10/2009	3/12/2009	MAP
Copper	**11000**	µg/kg	1000	1	PT09C10D	3/10/2009	3/12/2009	MAP
Lead	**9500**	µg/kg	1000	1	PT09C10D	3/10/2009	3/12/2009	MAP
Selenium	**320**	µg/kg	200	1	PT09C10D	3/10/2009	3/13/2009	MAP
Silver	**U**	µg/kg	100	1	PT09C10D	3/10/2009	3/12/2009	MAP
Zinc	**24000**	µg/kg	1000	1	PT09C10D	3/10/2009	3/12/2009	MAP
Mercury by CVAAS (EPA 7471A)								
Mercury	**U**	µg/kg	56	1	PM09C10B	3/10/2009	3/10/2009	ALM
Polynuclear Aromatic Hydrocarbons (PNAs) (EPA 3550B/EPA 8270C)								
Acenaphthene	**U**	µg/kg	370	1	PS09C11D	3/11/2009	3/12/2009	BDA
Acenaphthylene	**U**	µg/kg	370	1	PS09C11D	3/11/2009	3/12/2009	BDA
Anthracene	**U**	µg/kg	370	1	PS09C11D	3/11/2009	3/12/2009	BDA
Benzo(a)anthracene	**U**	µg/kg	370	1	PS09C11D	3/11/2009	3/12/2009	BDA
Benzo(a)pyrene	**U**	µg/kg	370	1	PS09C11D	3/11/2009	3/12/2009	BDA

Analytical Laboratory Report

Client Identification:	**Envirologic Technologies, Inc.**	Sample Matrix:	**Soil/Solid**
Fibertec Project Number:	**33098**	Sample Number:	**33098-002A**

Client Sample Information

Project Identification:	**Kzoo Co**	Client Sample Description:	**GSB-2@0.5'**
Project Number:	**080503**	Client Sample Number:	**2**
Sample Date:	**3/3/2009**	Chain of Custody Number:	**82430**

Comments: **All Results Reported On Dry Weight Basis. Percent Moisture = 9.96%.**

Definitions/ Qualifiers:

A: Spike recovery or precision unusable due to dilution.
B: The analyte was detected in the associated method blank.
E: The analyte was detected at a concentration greater than the calibration range, therefore the result is estimated.
J: The concentration is an estimated value.
U: The analyte was not detected at or above the reporting limit.
X: Matrix Interference has resulted in a raised reporting limit or distorted result.
W: Results reported on a wet-weight basis.
*: Value reported is outside QA limits

Analyte	Result	Units	Report Limit	Dilution Factor	Prep Batch	Prep Date/Time	Analysis Date/Time	Analyst
Polynuclear Aromatic Hydrocarbons (PNAs) (EPA 3550B/EPA 8270C)								
Benzo(b)fluoranthene	**U**	µg/kg	370	1	PS09C11D	3/11/2009	3/12/2009	BDA
Benzo(ghi)perylene	**U**	µg/kg	370	1	PS09C11D	3/11/2009	3/12/2009	BDA
Benzo(k)fluoranthene	**U**	µg/kg	370	1	PS09C11D	3/11/2009	3/12/2009	BDA
Chrysene	**U**	µg/kg	370	1	PS09C11D	3/11/2009	3/12/2009	BDA
Dibenzo(a,h)anthracene	**U**	µg/kg	370	1	PS09C11D	3/11/2009	3/12/2009	BDA
Fluoranthene	**U**	µg/kg	370	1	PS09C11D	3/11/2009	3/12/2009	BDA
Fluorene	**U**	µg/kg	370	1	PS09C11D	3/11/2009	3/12/2009	BDA
Indeno(1,2,3-cd)pyrene	**U**	µg/kg	370	1	PS09C11D	3/11/2009	3/12/2009	BDA
2-Methylnaphthalene	**U**	µg/kg	370	1	PS09C11D	3/11/2009	3/12/2009	BDA
Phenanthrene	**U**	µg/kg	370	1	PS09C11D	3/11/2009	3/12/2009	BDA
Pyrene	**U**	µg/kg	370	1	PS09C11D	3/11/2009	3/12/2009	BDA

Analytical Laboratory Report

Client Identification:	**Envirologic Technologies, Inc.**	Sample Matrix:	**Soil/Solid**
Fibertec Project Number:	**33098**	Sample Number:	**33098-003**

Client Sample Information

Project Identification:	**Kzoo Co**	Client Sample Description:	**GSB-3@0.5'**
Project Number:	**080503**	Client Sample Number:	**3**
Sample Date:	**3/3/2009**	Chain of Custody Number:	**82430**

Comments: **All Results Reported On Dry Weight Basis. Percent Moisture = 10.7%.**

Definitions/ Qualifiers:
A: Spike recovery or precision unusable due to dilution.
B: The analyte was detected in the associated method blank.
E: The analyte was detected at a concentration greater than the calibration range, therefore the result is estimated.
J: The concentration is an estimated value.
U: The analyte was not detected at or above the reporting limit.
X: Matrix Interference has resulted in a raised reporting limit or distorted result.
W: Results reported on a wet-weight basis.
*: Value reported is outside QA limits

Analyte	Result	Units	Report Limit	Dilution Factor	Prep Batch	Prep Date/Time	Analysis Date/Time	Analyst
Plus List (VOCs), 5035 (EPA 5035/EPA 8260B)								
Acetone	**U**	µg/kg	1100	1	VA09C11a	3/3/2009	3/11/2009	JAS
Acrylonitrile	**U**	µg/kg	110	1	VA09C11a	3/3/2009	3/11/2009	JAS
Benzene	**U**	µg/kg	56	1	VA09C11a	3/3/2009	3/11/2009	JAS
Bromobenzene	**U**	µg/kg	110	1	VA09C11a	3/3/2009	3/11/2009	JAS
Bromochloromethane	**U**	µg/kg	110	1	VA09C11a	3/3/2009	3/11/2009	JAS
Bromodichloromethane	**U**	µg/kg	110	1	VA09C11a	3/3/2009	3/11/2009	JAS
Bromoform	**U**	µg/kg	110	1	VA09C11a	3/3/2009	3/11/2009	JAS
Bromomethane	**U**	µg/kg	220	1	VA09C11a	3/3/2009	3/11/2009	JAS
2-Butanone	**U**	µg/kg	840	1	VA09C11a	3/3/2009	3/11/2009	JAS
n-Butylbenzene	**U**	µg/kg	56	1	VA09C11a	3/3/2009	3/11/2009	JAS
sec-Butylbenzene	**U**	µg/kg	56	1	VA09C11a	3/3/2009	3/11/2009	JAS
tert-Butylbenzene	**U**	µg/kg	56	1	VA09C11a	3/3/2009	3/11/2009	JAS
Carbon Disulfide	**U**	µg/kg	280	1	VA09C11a	3/3/2009	3/11/2009	JAS
Carbon Tetrachloride	**U**	µg/kg	56	1	VA09C11a	3/3/2009	3/11/2009	JAS
Chlorobenzene	**U**	µg/kg	56	1	VA09C11a	3/3/2009	3/11/2009	JAS
Chloroethane	**U**	µg/kg	280	1	VA09C11a	3/3/2009	3/11/2009	JAS
Chloroform	**U**	µg/kg	56	1	VA09C11a	3/3/2009	3/11/2009	JAS
Chloromethane	**U**	µg/kg	280	1	VA09C11a	3/3/2009	3/11/2009	JAS
2-Chlorotoluene	**U**	µg/kg	56	1	VA09C11a	3/3/2009	3/11/2009	JAS
Dibromochloromethane	**U**	µg/kg	110	1	VA09C11a	3/3/2009	3/11/2009	JAS

Analytical Laboratory Report

Client Identification:	**Envirologic Technologies, Inc.**	Sample Matrix:	**Soil/Solid**
Fibertec Project Number:	**33098**	Sample Number:	**33098-003**

Client Sample Information

Project Identification:	**Kzoo Co**	Client Sample Description:	**GSB-3@0.5'**
Project Number:	**080503**	Client Sample Number:	**3**
Sample Date:	**3/3/2009**	Chain of Custody Number:	**82430**

Comments: **All Results Reported On Dry Weight Basis. Percent Moisture = 10.7%.**

Definitions/ Qualifiers:
A: Spike recovery or precision unusable due to dilution.
B: The analyte was detected in the associated method blank.
E: The analyte was detected at a concentration greater than the calibration range, therefore the result is estimated.
J: The concentration is an estimated value.
U: The analyte was not detected at or above the reporting limit.
X: Matrix Interference has resulted in a raised reporting limit or distorted result.
W: Results reported on a wet-weight basis.
*: Value reported is outside QA limits

Analyte	Result	Units	Report Limit	Dilution Factor	Prep Batch	Prep Date/Time	Analysis Date/Time	Analyst
Plus List (VOCs), 5035 (EPA 5035/EPA 8260B)								
1,2-Dibromo-3-chloropropane	**U**	µg/kg	11	1	VA09C11a	3/3/2009	3/11/2009	JAS
Dibromomethane	**U**	µg/kg	280	1	VA09C11a	3/3/2009	3/11/2009	JAS
1,2-Dichlorobenzene	**U**	µg/kg	110	1	VA09C11a	3/3/2009	3/11/2009	JAS
1,3-Dichlorobenzene	**U**	µg/kg	110	1	VA09C11a	3/3/2009	3/11/2009	JAS
1,4-Dichlorobenzene	**U**	µg/kg	110	1	VA09C11a	3/3/2009	3/11/2009	JAS
trans-1,4-Dichloro-2-butene	**U**	µg/kg	110	1	VA09C11a	3/3/2009	3/11/2009	JAS
Dichlorodifluoromethane	**U**	µg/kg	280	1	VA09C11a	3/3/2009	3/11/2009	JAS
1,1-Dichloroethane	**U**	µg/kg	56	1	VA09C11a	3/3/2009	3/11/2009	JAS
1,2-Dichloroethane	**U**	µg/kg	56	1	VA09C11a	3/3/2009	3/11/2009	JAS
1,1-Dichloroethene	**U**	µg/kg	56	1	VA09C11a	3/3/2009	3/11/2009	JAS
cis-1,2-Dichloroethene	**U**	µg/kg	56	1	VA09C11a	3/3/2009	3/11/2009	JAS
trans-1,2-Dichloroethene	**U**	µg/kg	56	1	VA09C11a	3/3/2009	3/11/2009	JAS
1,2-Dichloropropane	**U**	µg/kg	56	1	VA09C11a	3/3/2009	3/11/2009	JAS
cis-1,3-Dichloropropene	**U**	µg/kg	56	1	VA09C11a	3/3/2009	3/11/2009	JAS
trans-1,3-Dichloropropene	**U**	µg/kg	56	1	VA09C11a	3/3/2009	3/11/2009	JAS
Diethyl Ether	**U**	µg/kg	220	1	VA09C11a	3/3/2009	3/11/2009	JAS
Ethylbenzene	**U**	µg/kg	56	1	VA09C11a	3/3/2009	3/11/2009	JAS
Ethylene Dibromide	**U**	µg/kg	22	1	VA09C11a	3/3/2009	3/11/2009	JAS
Hexachloroethane	**U**	µg/kg	110	1	VA09C11a	3/3/2009	3/11/2009	JAS
2-Hexanone	**U**	µg/kg	2800	1	VA09C11a	3/3/2009	3/11/2009	JAS

Analytical Laboratory Report

Client Identification:	**Envirologic Technologies, Inc.**	Sample Matrix:	**Soil/Solid**
Fibertec Project Number:	**33098**	Sample Number:	**33098-003**

Client Sample Information

Project Identification:	**Kzoo Co**	Client Sample Description:	**GSB-3@0.5'**
Project Number:	**080503**	Client Sample Number:	**3**
Sample Date:	**3/3/2009**	Chain of Custody Number:	**82430**

Comments: **All Results Reported On Dry Weight Basis. Percent Moisture = 10.7%.**

Definitions/ Qualifiers:
A: Spike recovery or precision unusable due to dilution.
B: The analyte was detected in the associated method blank.
E: The analyte was detected at a concentration greater than the calibration range, therefore the result is estimated.
J: The concentration is an estimated value.
U: The analyte was not detected at or above the reporting limit.
X: Matrix Interference has resulted in a raised reporting limit or distorted result.
W: Results reported on a wet-weight basis.
*: Value reported is outside QA limits

Analyte	Result	Units	Report Limit	Dilution Factor	Prep Batch	Prep Date/Time	Analysis Date/Time	Analyst
Plus List (VOCs), 5035 (EPA 5035/EPA 8260B)								
Isopropylbenzene	**U**	µg/kg	280	1	VA09C11a	3/3/2009	3/11/2009	JAS
4-Methyl-2-pentanone	**U**	µg/kg	2800	1	VA09C11a	3/3/2009	3/11/2009	JAS
MTBE	**U**	µg/kg	280	1	VA09C11a	3/3/2009	3/11/2009	JAS
Methyl Iodide	**U**	µg/kg	110	1	VA09C11a	3/3/2009	3/11/2009	JAS
Methylene Chloride	**U**	µg/kg	110	1	VA09C11a	3/3/2009	3/11/2009	JAS
Naphthalene	**U**	µg/kg	370	1	VA09C11a	3/3/2009	3/11/2009	JAS
n-Propylbenzene	**U**	µg/kg	110	1	VA09C11a	3/3/2009	3/11/2009	JAS
Styrene	**U**	µg/kg	56	1	VA09C11a	3/3/2009	3/11/2009	JAS
1,1,1,2-Tetrachloroethane	**U**	µg/kg	110	1	VA09C11a	3/3/2009	3/11/2009	JAS
1,1,2,2-Tetrachloroethane	**U**	µg/kg	56	1	VA09C11a	3/3/2009	3/11/2009	JAS
Tetrachloroethene	**U**	µg/kg	56	1	VA09C11a	3/3/2009	3/11/2009	JAS
Toluene	**U**	µg/kg	110	1	VA09C11a	3/3/2009	3/11/2009	JAS
1,2,4-Trichlorobenzene	**U**	µg/kg	370	1	VA09C11a	3/3/2009	3/11/2009	JAS
1,1,1-Trichloroethane	**U**	µg/kg	56	1	VA09C11a	3/3/2009	3/11/2009	JAS
1,1,2-Trichloroethane	**U**	µg/kg	56	1	VA09C11a	3/3/2009	3/11/2009	JAS
Trichloroethene	**U**	µg/kg	56	1	VA09C11a	3/3/2009	3/11/2009	JAS
Trichlorofluoromethane	**U**	µg/kg	110	1	VA09C11a	3/3/2009	3/11/2009	JAS
1,2,3-Trichloropropane	**U**	µg/kg	110	1	VA09C11a	3/3/2009	3/11/2009	JAS
1,2,3-Trimethylbenzene	**U**	µg/kg	110	1	VA09C11a	3/3/2009	3/11/2009	JAS
1,2,4-Trimethylbenzene	**U**	µg/kg	110	1	VA09C11a	3/3/2009	3/11/2009	JAS

Analytical Laboratory Report

Client Identification:	**Envirologic Technologies, Inc.**	Sample Matrix:	**Soil/Solid**
Fibertec Project Number:	**33098**	Sample Number:	**33098-003**

Client Sample Information

Project Identification:	**Kzoo Co**	Client Sample Description:	**GSB-3@0.5'**
Project Number:	**080503**	Client Sample Number:	**3**
Sample Date:	**3/3/2009**	Chain of Custody Number:	**82430**

Comments: **All Results Reported On Dry Weight Basis. Percent Moisture = 10.7%.**

Definitions/ Qualifiers:

A: Spike recovery or precision unusable due to dilution.
B: The analyte was detected in the associated method blank.
E: The analyte was detected at a concentration greater than the calibration range, therefore the result is estimated.
J: The concentration is an estimated value.
U: The analyte was not detected at or above the reporting limit.
X: Matrix Interference has resulted in a raised reporting limit or distorted result.
W: Results reported on a wet-weight basis.
*: Value reported is outside QA limits

Analyte	Result	Units	Report Limit	Dilution Factor	Prep Batch	Prep Date/Time	Analysis Date/Time	Analyst
Plus List (VOCs), 5035 (EPA 5035/EPA 8260B)								
1,3,5-Trimethylbenzene	**U**	µg/kg	110	1	VA09C11a	3/3/2009	3/11/2009	JAS
Vinyl Chloride	**U**	µg/kg	45	1	VA09C11a	3/3/2009	3/11/2009	JAS
Xylenes	**U**	µg/kg	170	1	VA09C11a	3/3/2009	3/11/2009	JAS

Analytical Laboratory Report

Client Identification:	**Envirologic Technologies, Inc.**	Sample Matrix:	**Soil/Solid**
Fibertec Project Number:	**33098**	Sample Number:	**33098-003A**

Client Sample Information

Project Identification:	**Kzoo Co**	Client Sample Description:	**GSB-3@0.5'**
Project Number:	**080503**	Client Sample Number:	**3**
Sample Date:	**3/3/2009**	Chain of Custody Number:	**82430**

Comments: **All Results Reported On Dry Weight Basis. Percent Moisture = 10.7%.**

Definitions/ Qualifiers:
A: Spike recovery or precision unusable due to dilution.
B: The analyte was detected in the associated method blank.
E: The analyte was detected at a concentration greater than the calibration range, therefore the result is estimated.
J: The concentration is an estimated value.
U: The analyte was not detected at or above the reporting limit.
X: Matrix Interference has resulted in a raised reporting limit or distorted result.
W: Results reported on a wet-weight basis.
*: Value reported is outside QA limits

Analyte	Result	Units	Report Limit	Dilution Factor	Prep Batch	Prep Date/Time	Analysis Date/Time	Analyst
Dry Weight Determination (ASTM D 2974-87)								
Percent Moisture (Water Content)	**11**	%	0.1	1	MC090309	3/9/2009	3/10/2009	BMG
Trace Elements by ICP/MS (EPA 3050B/EPA 6020)								
Aluminum	**4400000**	µg/kg	1000	1	PT09C10D	3/10/2009	3/12/2009	MAP
Michigan 10 Elements by ICP/MS (EPA 3050B/EPA 6020)								
Arsenic	**7100**	µg/kg	100	1	PT09C10D	3/10/2009	3/12/2009	MAP
Barium	**52000**	µg/kg	1000	1	PT09C10D	3/10/2009	3/12/2009	MAP
Cadmium	**150**	µg/kg	50	1	PT09C10D	3/10/2009	3/12/2009	MAP
Chromium	**7200**	µg/kg	500	1	PT09C10D	3/10/2009	3/12/2009	MAP
Copper	**9700**	µg/kg	1000	1	PT09C10D	3/10/2009	3/12/2009	MAP
Lead	**19000**	µg/kg	1000	1	PT09C10D	3/10/2009	3/12/2009	MAP
Selenium	**290**	µg/kg	200	1	PT09C10D	3/10/2009	3/13/2009	MAP
Silver	**U**	µg/kg	100	1	PT09C10D	3/10/2009	3/12/2009	MAP
Zinc	**26000**	µg/kg	1000	1	PT09C10D	3/10/2009	3/12/2009	MAP
Mercury by CVAAS (EPA 7471A)								
Mercury	**U**	µg/kg	56	1	PM09C10B	3/10/2009	3/10/2009	ALM
Polynuclear Aromatic Hydrocarbons (PNAs) (EPA 3550B/EPA 8270C)								
Acenaphthene	**U**	µg/kg	370	1	PS09C11D	3/11/2009	3/12/2009	BDA
Acenaphthylene	**U**	µg/kg	370	1	PS09C11D	3/11/2009	3/12/2009	BDA
Anthracene	**U**	µg/kg	370	1	PS09C11D	3/11/2009	3/12/2009	BDA
Benzo(a)anthracene	**U**	µg/kg	370	1	PS09C11D	3/11/2009	3/12/2009	BDA
Benzo(a)pyrene	**U**	µg/kg	370	1	PS09C11D	3/11/2009	3/12/2009	BDA

Analytical Laboratory Report

Client Identification:	**Envirologic Technologies, Inc.**	Sample Matrix:	**Soil/Solid**
Fibertec Project Number:	**33098**	Sample Number:	**33098-003A**

Client Sample Information

Project Identification:	**Kzoo Co**	Client Sample Description:	**GSB-3@0.5'**
Project Number:	**080503**	Client Sample Number:	**3**
Sample Date:	**3/3/2009**	Chain of Custody Number:	**82430**

Comments: **All Results Reported On Dry Weight Basis. Percent Moisture = 10.7%.**

Definitions/ Qualifiers:

A: Spike recovery or precision unusable due to dilution.
B: The analyte was detected in the associated method blank.
E: The analyte was detected at a concentration greater than the calibration range, therefore the result is estimated.
J: The concentration is an estimated value.
U: The analyte was not detected at or above the reporting limit.
X: Matrix Interference has resulted in a raised reporting limit or distorted result.
W: Results reported on a wet-weight basis.
*: Value reported is outside QA limits

Analyte	Result	Units	Report Limit	Dilution Factor	Prep Batch	Prep Date/Time	Analysis Date/Time	Analyst
Polynuclear Aromatic Hydrocarbons (PNAs) (EPA 3550B/EPA 8270C)								
Benzo(b)fluoranthene	**U**	µg/kg	370	1	PS09C11D	3/11/2009	3/12/2009	BDA
Benzo(ghi)perylene	**U**	µg/kg	370	1	PS09C11D	3/11/2009	3/12/2009	BDA
Benzo(k)fluoranthene	**U**	µg/kg	370	1	PS09C11D	3/11/2009	3/12/2009	BDA
Chrysene	**U**	µg/kg	370	1	PS09C11D	3/11/2009	3/12/2009	BDA
Dibenzo(a,h)anthracene	**U**	µg/kg	370	1	PS09C11D	3/11/2009	3/12/2009	BDA
Fluoranthene	**U**	µg/kg	370	1	PS09C11D	3/11/2009	3/12/2009	BDA
Fluorene	**U**	µg/kg	370	1	PS09C11D	3/11/2009	3/12/2009	BDA
Indeno(1,2,3-cd)pyrene	**U**	µg/kg	370	1	PS09C11D	3/11/2009	3/12/2009	BDA
2-Methylnaphthalene	**U**	µg/kg	370	1	PS09C11D	3/11/2009	3/12/2009	BDA
Phenanthrene	**U**	µg/kg	370	1	PS09C11D	3/11/2009	3/12/2009	BDA
Pyrene	**U**	µg/kg	370	1	PS09C11D	3/11/2009	3/12/2009	BDA

Analytical Laboratory Report

Client Identification:	**Envirologic Technologies, Inc.**	Sample Matrix:	**Soil/Solid**
Fibertec Project Number:	**33098**	Sample Number:	**33098-004**

Client Sample Information

Project Identification:	**Kzoo Co**	Client Sample Description:	**GSB-4@0.5'**
Project Number:	**080503**	Client Sample Number:	**4**
Sample Date:	**3/3/2009**	Chain of Custody Number:	**82430**

Comments: **All Results Reported On Dry Weight Basis. Percent Moisture = 19.2%.**

Definitions/ Qualifiers:
A: Spike recovery or precision unusable due to dilution.
B: The analyte was detected in the associated method blank.
E: The analyte was detected at a concentration greater than the calibration range, therefore the result is estimated.
J: The concentration is an estimated value.
U: The analyte was not detected at or above the reporting limit.
X: Matrix Interference has resulted in a raised reporting limit or distorted result.
W: Results reported on a wet-weight basis.
*: Value reported is outside QA limits

Analyte	Result	Units	Report Limit	Dilution Factor	Prep Batch	Prep Date/Time	Analysis Date/Time	Analyst
Plus List (VOCs), 5035 (EPA 5035/EPA 8260B)								
Acetone	**U**	µg/kg	1200	1	VA09C11B	3/3/2009	3/12/2009	JAS
Acrylonitrile	**U**	µg/kg	120	1	VA09C11B	3/3/2009	3/12/2009	JAS
Benzene	**U**	µg/kg	62	1	VA09C11B	3/3/2009	3/12/2009	JAS
Bromobenzene	**U**	µg/kg	120	1	VA09C11B	3/3/2009	3/12/2009	JAS
Bromochloromethane	**U**	µg/kg	120	1	VA09C11B	3/3/2009	3/12/2009	JAS
Bromodichloromethane	**U**	µg/kg	120	1	VA09C11B	3/3/2009	3/12/2009	JAS
Bromoform	**U**	µg/kg	120	1	VA09C11B	3/3/2009	3/12/2009	JAS
Bromomethane	**U**	µg/kg	250	1	VA09C11B	3/3/2009	3/12/2009	JAS
2-Butanone	**U**	µg/kg	930	1	VA09C11B	3/3/2009	3/12/2009	JAS
n-Butylbenzene	**U**	µg/kg	62	1	VA09C11B	3/3/2009	3/12/2009	JAS
sec-Butylbenzene	**U**	µg/kg	62	1	VA09C11B	3/3/2009	3/12/2009	JAS
tert-Butylbenzene	**U**	µg/kg	62	1	VA09C11B	3/3/2009	3/12/2009	JAS
Carbon Disulfide	**U**	µg/kg	310	1	VA09C11B	3/3/2009	3/12/2009	JAS
Carbon Tetrachloride	**U**	µg/kg	62	1	VA09C11B	3/3/2009	3/12/2009	JAS
Chlorobenzene	**U**	µg/kg	62	1	VA09C11B	3/3/2009	3/12/2009	JAS
Chloroethane	**U**	µg/kg	310	1	VA09C11B	3/3/2009	3/12/2009	JAS
Chloroform	**U**	µg/kg	62	1	VA09C11B	3/3/2009	3/12/2009	JAS
Chloromethane	**U**	µg/kg	310	1	VA09C11B	3/3/2009	3/12/2009	JAS
2-Chlorotoluene	**U**	µg/kg	62	1	VA09C11B	3/3/2009	3/12/2009	JAS
Dibromochloromethane	**U**	µg/kg	120	1	VA09C11B	3/3/2009	3/12/2009	JAS

Analytical Laboratory Report

Client Identification:	**Envirologic Technologies, Inc.**	Sample Matrix:	**Soil/Solid**
Fibertec Project Number:	**33098**	Sample Number:	**33098-004**

Client Sample Information

Project Identification:	**Kzoo Co**	Client Sample Description:	**GSB-4@0.5'**
Project Number:	**080503**	Client Sample Number:	**4**
Sample Date:	**3/3/2009**	Chain of Custody Number:	**82430**

Comments: **All Results Reported On Dry Weight Basis. Percent Moisture = 19.2%.**

Definitions/ Qualifiers:
A: Spike recovery or precision unusable due to dilution.
B: The analyte was detected in the associated method blank.
E: The analyte was detected at a concentration greater than the calibration range, therefore the result is estimated.
J: The concentration is an estimated value.
U: The analyte was not detected at or above the reporting limit.
X: Matrix Interference has resulted in a raised reporting limit or distorted result.
W: Results reported on a wet-weight basis.
*: Value reported is outside QA limits

Analyte	Result	Units	Report Limit	Dilution Factor	Prep Batch	Prep Date/Time	Analysis Date/Time	Analyst
Plus List (VOCs), 5035 (EPA 5035/EPA 8260B)								
1,2-Dibromo-3-chloropropane	**U**	µg/kg	12	1	VA09C11B	3/3/2009	3/12/2009	JAS
Dibromomethane	**U**	µg/kg	310	1	VA09C11B	3/3/2009	3/12/2009	JAS
1,2-Dichlorobenzene	**U**	µg/kg	120	1	VA09C11B	3/3/2009	3/12/2009	JAS
1,3-Dichlorobenzene	**U**	µg/kg	120	1	VA09C11B	3/3/2009	3/12/2009	JAS
1,4-Dichlorobenzene	**U**	µg/kg	120	1	VA09C11B	3/3/2009	3/12/2009	JAS
trans-1,4-Dichloro-2-butene	**U**	µg/kg	120	1	VA09C11B	3/3/2009	3/12/2009	JAS
Dichlorodifluoromethane	**U**	µg/kg	310	1	VA09C11B	3/3/2009	3/12/2009	JAS
1,1-Dichloroethane	**U**	µg/kg	62	1	VA09C11B	3/3/2009	3/12/2009	JAS
1,2-Dichloroethane	**U**	µg/kg	62	1	VA09C11B	3/3/2009	3/12/2009	JAS
1,1-Dichloroethene	**U**	µg/kg	62	1	VA09C11B	3/3/2009	3/12/2009	JAS
cis-1,2-Dichloroethene	**U**	µg/kg	62	1	VA09C11B	3/3/2009	3/12/2009	JAS
trans-1,2-Dichloroethene	**U**	µg/kg	62	1	VA09C11B	3/3/2009	3/12/2009	JAS
1,2-Dichloropropane	**U**	µg/kg	62	1	VA09C11B	3/3/2009	3/12/2009	JAS
cis-1,3-Dichloropropene	**U**	µg/kg	62	1	VA09C11B	3/3/2009	3/12/2009	JAS
trans-1,3-Dichloropropene	**U**	µg/kg	62	1	VA09C11B	3/3/2009	3/12/2009	JAS
Diethyl Ether	**U**	µg/kg	250	1	VA09C11B	3/3/2009	3/12/2009	JAS
Ethylbenzene	**U**	µg/kg	62	1	VA09C11B	3/3/2009	3/12/2009	JAS
Ethylene Dibromide	**U**	µg/kg	25	1	VA09C11B	3/3/2009	3/12/2009	JAS
Hexachloroethane	**U**	µg/kg	120	1	VA09C11B	3/3/2009	3/12/2009	JAS
2-Hexanone	**U**	µg/kg	3100	1	VA09C11B	3/3/2009	3/12/2009	JAS

Analytical Laboratory Report

Client Identification:	**Envirologic Technologies, Inc.**	Sample Matrix:	**Soil/Solid**
Fibertec Project Number:	**33098**	Sample Number:	**33098-004**

Client Sample Information

Project Identification:	**Kzoo Co**	Client Sample Description:	**GSB-4@0.5'**
Project Number:	**080503**	Client Sample Number:	**4**
Sample Date:	**3/3/2009**	Chain of Custody Number:	**82430**

Comments: **All Results Reported On Dry Weight Basis. Percent Moisture = 19.2%.**

Definitions/ Qualifiers:
A: Spike recovery or precision unusable due to dilution.
B: The analyte was detected in the associated method blank.
E: The analyte was detected at a concentration greater than the calibration range, therefore the result is estimated.
J: The concentration is an estimated value.
U: The analyte was not detected at or above the reporting limit.
X: Matrix Interference has resulted in a raised reporting limit or distorted result.
W: Results reported on a wet-weight basis.
*: Value reported is outside QA limits

Analyte	Result	Units	Report Limit	Dilution Factor	Prep Batch	Prep Date/Time	Analysis Date/Time	Analyst
Plus List (VOCs), 5035 (EPA 5035/EPA 8260B)								
Isopropylbenzene	**U**	µg/kg	310	1	VA09C11B	3/3/2009	3/12/2009	JAS
4-Methyl-2-pentanone	**U**	µg/kg	3100	1	VA09C11B	3/3/2009	3/12/2009	JAS
MTBE	**U**	µg/kg	310	1	VA09C11B	3/3/2009	3/12/2009	JAS
Methyl Iodide	**U**	µg/kg	120	1	VA09C11B	3/3/2009	3/12/2009	JAS
Methylene Chloride	**U**	µg/kg	120	1	VA09C11B	3/3/2009	3/12/2009	JAS
Naphthalene	**U**	µg/kg	410	1	VA09C11B	3/3/2009	3/12/2009	JAS
n-Propylbenzene	**U**	µg/kg	120	1	VA09C11B	3/3/2009	3/12/2009	JAS
Styrene	**U**	µg/kg	62	1	VA09C11B	3/3/2009	3/12/2009	JAS
1,1,1,2-Tetrachloroethane	**U**	µg/kg	120	1	VA09C11B	3/3/2009	3/12/2009	JAS
1,1,2,2-Tetrachloroethane	**U**	µg/kg	62	1	VA09C11B	3/3/2009	3/12/2009	JAS
Tetrachloroethene	**U**	µg/kg	62	1	VA09C11B	3/3/2009	3/12/2009	JAS
Toluene	**U**	µg/kg	120	1	VA09C11B	3/3/2009	3/12/2009	JAS
1,2,4-Trichlorobenzene	**U**	µg/kg	410	1	VA09C11B	3/3/2009	3/12/2009	JAS
1,1,1-Trichloroethane	**U**	µg/kg	62	1	VA09C11B	3/3/2009	3/12/2009	JAS
1,1,2-Trichloroethane	**U**	µg/kg	62	1	VA09C11B	3/3/2009	3/12/2009	JAS
Trichloroethene	**U**	µg/kg	62	1	VA09C11B	3/3/2009	3/12/2009	JAS
Trichlorofluoromethane	**U**	µg/kg	120	1	VA09C11B	3/3/2009	3/12/2009	JAS
1,2,3-Trichloropropane	**U**	µg/kg	120	1	VA09C11B	3/3/2009	3/12/2009	JAS
1,2,3-Trimethylbenzene	**U**	µg/kg	120	1	VA09C11B	3/3/2009	3/12/2009	JAS
1,2,4-Trimethylbenzene	**U**	µg/kg	120	1	VA09C11B	3/3/2009	3/12/2009	JAS

Analytical Laboratory Report

Client Identification:	**Envirologic Technologies, Inc.**	Sample Matrix:	**Soil/Solid**
Fibertec Project Number:	**33098**	Sample Number:	**33098-004**

Client Sample Information

Project Identification:	**Kzoo Co**	Client Sample Description:	**GSB-4@0.5'**
Project Number:	**080503**	Client Sample Number:	**4**
Sample Date:	**3/3/2009**	Chain of Custody Number:	**82430**

Comments: **All Results Reported On Dry Weight Basis. Percent Moisture = 19.2%.**

Definitions/ Qualifiers:

A: Spike recovery or precision unusable due to dilution.
B: The analyte was detected in the associated method blank.
E: The analyte was detected at a concentration greater than the calibration range, therefore the result is estimated.
J: The concentration is an estimated value.
U: The analyte was not detected at or above the reporting limit.
X: Matrix Interference has resulted in a raised reporting limit or distorted result.
W: Results reported on a wet-weight basis.
*: Value reported is outside QA limits

Analyte	Result	Units	Report Limit	Dilution Factor	Prep Batch	Prep Date/Time	Analysis Date/Time	Analyst
Plus List (VOCs), 5035 (EPA 5035/EPA 8260B)								
1,3,5-Trimethylbenzene	**U**	µg/kg	120	1	VA09C11B	3/3/2009	3/12/2009	JAS
Vinyl Chloride	**U**	µg/kg	49	1	VA09C11B	3/3/2009	3/12/2009	JAS
Xylenes	**U**	µg/kg	190	1	VA09C11B	3/3/2009	3/12/2009	JAS

Analytical Laboratory Report

Client Identification:	**Envirologic Technologies, Inc.**	Sample Matrix:	**Soil/Solid**
Fibertec Project Number:	**33098**	Sample Number:	**33098-004A**

Client Sample Information

Project Identification:	**Kzoo Co**	Client Sample Description:	**GSB-4@0.5'**
Project Number:	**080503**	Client Sample Number:	**4**
Sample Date:	**3/3/2009**	Chain of Custody Number:	**82430**

Comments: **All Results Reported On Dry Weight Basis. Percent Moisture = 19.2%.**

Definitions/ Qualifiers:
A: Spike recovery or precision unusable due to dilution.
B: The analyte was detected in the associated method blank.
E: The analyte was detected at a concentration greater than the calibration range, therefore the result is estimated.
J: The concentration is an estimated value.
U: The analyte was not detected at or above the reporting limit.
X: Matrix Interference has resulted in a raised reporting limit or distorted result.
W: Results reported on a wet-weight basis.
*: Value reported is outside QA limits

Analyte	Result	Units	Report Limit	Dilution Factor	Prep Batch	Prep Date/Time	Analysis Date/Time	Analyst
Dry Weight Determination (ASTM D 2974-87)								
Percent Moisture (Water Content)	**19**	%	0.1	1	MC090309	3/9/2009	3/10/2009	BMG
Trace Elements by ICP/MS (EPA 3050B/EPA 6020)								
Aluminum	**2800000**	µg/kg	1000	1	PT09C10D	3/10/2009	3/12/2009	MAP
Michigan 10 Elements by ICP/MS (EPA 3050B/EPA 6020)								
Arsenic	**13000**	µg/kg	100	1	PT09C10D	3/10/2009	3/12/2009	MAP
Barium	**72000**	µg/kg	1000	1	PT09C10D	3/10/2009	3/12/2009	MAP
Cadmium	**640**	µg/kg	50	1	PT09C10D	3/10/2009	3/12/2009	MAP
Chromium	**22000**	µg/kg	500	1	PT09C10D	3/10/2009	3/12/2009	MAP
Copper	**25000**	µg/kg	1000	1	PT09C10D	3/10/2009	3/12/2009	MAP
Lead	**55000**	µg/kg	1000	1	PT09C10D	3/10/2009	3/12/2009	MAP
Selenium	**280**	µg/kg	200	1	PT09C10D	3/10/2009	3/13/2009	MAP
Silver	**U**	µg/kg	100	1	PT09C10D	3/10/2009	3/12/2009	MAP
Zinc	**140000**	µg/kg	1000	1	PT09C10D	3/10/2009	3/12/2009	MAP
Mercury by CVAAS (EPA 7471A)								
Mercury	**U**	µg/kg	62	1	PM09C10B	3/10/2009	3/10/2009	ALM
Polynuclear Aromatic Hydrocarbons (PNAs) (EPA 3550B/EPA 8270C)								
Acenaphthene	**7200**	µg/kg	1400	3.5	PS09C11D	3/11/2009	3/12/2009	HLS
Acenaphthylene	**U**	µg/kg	1400	3.5	PS09C11D	3/11/2009	3/12/2009	HLS
Anthracene	**35000**	µg/kg	1400	3.5	PS09C11D	3/11/2009	3/12/2009	HLS
Benzo(a)anthracene	**93000**	µg/kg	1400	3.5	PS09C11D	3/11/2009	3/12/2009	HLS
Benzo(a)pyrene	**100000**	µg/kg	1400	3.5	PS09C11D	3/11/2009	3/12/2009	HLS

Analytical Laboratory Report

Client Identification:	**Envirologic Technologies, Inc.**	Sample Matrix:	**Soil/Solid**
Fibertec Project Number:	**33098**	Sample Number:	**33098-004A**

Client Sample Information

Project Identification:	**Kzoo Co**	Client Sample Description:	**GSB-4@0.5'**
Project Number:	**080503**	Client Sample Number:	**4**
Sample Date:	**3/3/2009**	Chain of Custody Number:	**82430**

Comments: **All Results Reported On Dry Weight Basis. Percent Moisture = 19.2%.**

Definitions/ Qualifiers:

A: Spike recovery or precision unusable due to dilution.
B: The analyte was detected in the associated method blank.
E: The analyte was detected at a concentration greater than the calibration range, therefore the result is estimated.
J: The concentration is an estimated value.
U: The analyte was not detected at or above the reporting limit.
X: Matrix Interference has resulted in a raised reporting limit or distorted result.
W: Results reported on a wet-weight basis.
*: Value reported is outside QA limits

Analyte	Result	Units	Report Limit	Dilution Factor	Prep Batch	Prep Date/Time	Analysis Date/Time	Analyst
Polynuclear Aromatic Hydrocarbons (PNAs) (EPA 3550B/EPA 8270C)								
Benzo(b)fluoranthene	**160000**	µg/kg	1400	3.5	PS09C11D	3/11/2009	3/12/2009	HLS
Benzo(ghi)perylene	**82000**	µg/kg	1400	3.5	PS09C11D	3/11/2009	3/12/2009	HLS
Benzo(k)fluoranthene	**44000**	µg/kg	1400	3.5	PS09C11D	3/11/2009	3/12/2009	HLS
Chrysene	**110000**	µg/kg	1400	3.5	PS09C11D	3/11/2009	3/12/2009	HLS
Dibenzo(a,h)anthracene	**14000**	µg/kg	1400	3.5	PS09C11D	3/11/2009	3/12/2009	HLS
Fluoranthene	**220000**	µg/kg	1400	3.5	PS09C11D	3/11/2009	3/12/2009	HLS
Fluorene	**13000**	µg/kg	1400	3.5	PS09C11D	3/11/2009	3/12/2009	HLS
Indeno(1,2,3-cd)pyrene	**100000**	µg/kg	1400	3.5	PS09C11D	3/11/2009	3/12/2009	HLS
2-Methylnaphthalene	**U**	µg/kg	1400	3.5	PS09C11D	3/11/2009	3/12/2009	HLS
Phenanthrene	**130000**	µg/kg	1400	3.5	PS09C11D	3/11/2009	3/12/2009	HLS
Pyrene	**180000**	µg/kg	1400	3.5	PS09C11D	3/11/2009	3/12/2009	HLS

Analytical Laboratory Report

Client Identification:	**Envirologic Technologies, Inc.**	Sample Matrix:	**Soil/Solid**
Fibertec Project Number:	**33098**	Sample Number:	**33098-005**

Client Sample Information

Project Identification:	**Kzoo Co**	Client Sample Description:	**GSB-5@0.5'**
Project Number:	**080503**	Client Sample Number:	**5**
Sample Date:	**3/3/2009**	Chain of Custody Number:	**82430**

Comments: **All Results Reported On Dry Weight Basis. Percent Moisture = 5.17%.**

Definitions/ Qualifiers:
A: Spike recovery or precision unusable due to dilution.
B: The analyte was detected in the associated method blank.
E: The analyte was detected at a concentration greater than the calibration range, therefore the result is estimated.
J: The concentration is an estimated value.
U: The analyte was not detected at or above the reporting limit.
X: Matrix Interference has resulted in a raised reporting limit or distorted result.
W: Results reported on a wet-weight basis.
*: Value reported is outside QA limits

Analyte	Result	Units	Report Limit	Dilution Factor	Prep Batch	Prep Date/Time	Analysis Date/Time	Analyst
Plus List (VOCs), 5035 (EPA 5035/EPA 8260B)								
Acetone	**U**	µg/kg	1100	1	VA09C11B	3/3/2009	3/12/2009	JAS
Acrylonitrile	**U**	µg/kg	110	1	VA09C11B	3/3/2009	3/12/2009	JAS
Benzene	**U**	µg/kg	53	1	VA09C11B	3/3/2009	3/12/2009	JAS
Bromobenzene	**U**	µg/kg	110	1	VA09C11B	3/3/2009	3/12/2009	JAS
Bromochloromethane	**U**	µg/kg	110	1	VA09C11B	3/3/2009	3/12/2009	JAS
Bromodichloromethane	**U**	µg/kg	110	1	VA09C11B	3/3/2009	3/12/2009	JAS
Bromoform	**U**	µg/kg	110	1	VA09C11B	3/3/2009	3/12/2009	JAS
Bromomethane	**U**	µg/kg	210	1	VA09C11B	3/3/2009	3/12/2009	JAS
2-Butanone	**U**	µg/kg	790	1	VA09C11B	3/3/2009	3/12/2009	JAS
n-Butylbenzene	**U**	µg/kg	53	1	VA09C11B	3/3/2009	3/12/2009	JAS
sec-Butylbenzene	**U**	µg/kg	53	1	VA09C11B	3/3/2009	3/12/2009	JAS
tert-Butylbenzene	**U**	µg/kg	53	1	VA09C11B	3/3/2009	3/12/2009	JAS
Carbon Disulfide	**U**	µg/kg	260	1	VA09C11B	3/3/2009	3/12/2009	JAS
Carbon Tetrachloride	**U**	µg/kg	53	1	VA09C11B	3/3/2009	3/12/2009	JAS
Chlorobenzene	**U**	µg/kg	53	1	VA09C11B	3/3/2009	3/12/2009	JAS
Chloroethane	**U**	µg/kg	260	1	VA09C11B	3/3/2009	3/12/2009	JAS
Chloroform	**U**	µg/kg	53	1	VA09C11B	3/3/2009	3/12/2009	JAS
Chloromethane	**U**	µg/kg	260	1	VA09C11B	3/3/2009	3/12/2009	JAS
2-Chlorotoluene	**U**	µg/kg	53	1	VA09C11B	3/3/2009	3/12/2009	JAS
Dibromochloromethane	**U**	µg/kg	110	1	VA09C11B	3/3/2009	3/12/2009	JAS

Analytical Laboratory Report

Client Identification:	**Envirologic Technologies, Inc.**	Sample Matrix:	**Soil/Solid**
Fibertec Project Number:	**33098**	Sample Number:	**33098-005**

Client Sample Information

Project Identification:	**Kzoo Co**	Client Sample Description:	**GSB-5@0.5'**
Project Number:	**080503**	Client Sample Number:	**5**
Sample Date:	**3/3/2009**	Chain of Custody Number:	**82430**

Comments: **All Results Reported On Dry Weight Basis. Percent Moisture = 5.17%.**

Definitions/ Qualifiers:
A: Spike recovery or precision unusable due to dilution.
B: The analyte was detected in the associated method blank.
E: The analyte was detected at a concentration greater than the calibration range, therefore the result is estimated.
J: The concentration is an estimated value.
U: The analyte was not detected at or above the reporting limit.
X: Matrix Interference has resulted in a raised reporting limit or distorted result.
W: Results reported on a wet-weight basis.
*: Value reported is outside QA limits

Analyte	Result	Units	Report Limit	Dilution Factor	Prep Batch	Prep Date/Time	Analysis Date/Time	Analyst
Plus List (VOCs), 5035 (EPA 5035/EPA 8260B)								
1,2-Dibromo-3-chloropropane	**U**	µg/kg	11	1	VA09C11B	3/3/2009	3/12/2009	JAS
Dibromomethane	**U**	µg/kg	260	1	VA09C11B	3/3/2009	3/12/2009	JAS
1,2-Dichlorobenzene	**U**	µg/kg	110	1	VA09C11B	3/3/2009	3/12/2009	JAS
1,3-Dichlorobenzene	**U**	µg/kg	110	1	VA09C11B	3/3/2009	3/12/2009	JAS
1,4-Dichlorobenzene	**U**	µg/kg	110	1	VA09C11B	3/3/2009	3/12/2009	JAS
trans-1,4-Dichloro-2-butene	**U**	µg/kg	110	1	VA09C11B	3/3/2009	3/12/2009	JAS
Dichlorodifluoromethane	**U**	µg/kg	260	1	VA09C11B	3/3/2009	3/12/2009	JAS
1,1-Dichloroethane	**U**	µg/kg	53	1	VA09C11B	3/3/2009	3/12/2009	JAS
1,2-Dichloroethane	**U**	µg/kg	53	1	VA09C11B	3/3/2009	3/12/2009	JAS
1,1-Dichloroethene	**U**	µg/kg	53	1	VA09C11B	3/3/2009	3/12/2009	JAS
cis-1,2-Dichloroethene	**U**	µg/kg	53	1	VA09C11B	3/3/2009	3/12/2009	JAS
trans-1,2-Dichloroethene	**U**	µg/kg	53	1	VA09C11B	3/3/2009	3/12/2009	JAS
1,2-Dichloropropane	**U**	µg/kg	53	1	VA09C11B	3/3/2009	3/12/2009	JAS
cis-1,3-Dichloropropene	**U**	µg/kg	53	1	VA09C11B	3/3/2009	3/12/2009	JAS
trans-1,3-Dichloropropene	**U**	µg/kg	53	1	VA09C11B	3/3/2009	3/12/2009	JAS
Diethyl Ether	**U**	µg/kg	210	1	VA09C11B	3/3/2009	3/12/2009	JAS
Ethylbenzene	**U**	µg/kg	53	1	VA09C11B	3/3/2009	3/12/2009	JAS
Ethylene Dibromide	**U**	µg/kg	21	1	VA09C11B	3/3/2009	3/12/2009	JAS
Hexachloroethane	**U**	µg/kg	110	1	VA09C11B	3/3/2009	3/12/2009	JAS
2-Hexanone	**U**	µg/kg	2600	1	VA09C11B	3/3/2009	3/12/2009	JAS

Analytical Laboratory Report

Client Identification:	**Envirologic Technologies, Inc.**	Sample Matrix:	**Soil/Solid**
Fibertec Project Number:	**33098**	Sample Number:	**33098-005**

Client Sample Information

Project Identification:	**Kzoo Co**	Client Sample Description:	**GSB-5@0.5'**
Project Number:	**080503**	Client Sample Number:	**5**
Sample Date:	**3/3/2009**	Chain of Custody Number:	**82430**

Comments: **All Results Reported On Dry Weight Basis. Percent Moisture = 5.17%.**

Definitions/ Qualifiers:
A: Spike recovery or precision unusable due to dilution.
B: The analyte was detected in the associated method blank.
E: The analyte was detected at a concentration greater than the calibration range, therefore the result is estimated.
J: The concentration is an estimated value.
U: The analyte was not detected at or above the reporting limit.
X: Matrix Interference has resulted in a raised reporting limit or distorted result.
W: Results reported on a wet-weight basis.
*: Value reported is outside QA limits

Analyte	Result	Units	Report Limit	Dilution Factor	Prep Batch	Prep Date/Time	Analysis Date/Time	Analyst
Plus List (VOCs), 5035 (EPA 5035/EPA 8260B)								
Isopropylbenzene	**U**	µg/kg	260	1	VA09C11B	3/3/2009	3/12/2009	JAS
4-Methyl-2-pentanone	**U**	µg/kg	2600	1	VA09C11B	3/3/2009	3/12/2009	JAS
MTBE	**U**	µg/kg	260	1	VA09C11B	3/3/2009	3/12/2009	JAS
Methyl Iodide	**U**	µg/kg	110	1	VA09C11B	3/3/2009	3/12/2009	JAS
Methylene Chloride	**U**	µg/kg	110	1	VA09C11B	3/3/2009	3/12/2009	JAS
Naphthalene	**U**	µg/kg	350	1	VA09C11B	3/3/2009	3/12/2009	JAS
n-Propylbenzene	**U**	µg/kg	110	1	VA09C11B	3/3/2009	3/12/2009	JAS
Styrene	**U**	µg/kg	53	1	VA09C11B	3/3/2009	3/12/2009	JAS
1,1,1,2-Tetrachloroethane	**U**	µg/kg	110	1	VA09C11B	3/3/2009	3/12/2009	JAS
1,1,2,2-Tetrachloroethane	**U**	µg/kg	53	1	VA09C11B	3/3/2009	3/12/2009	JAS
Tetrachloroethene	**U**	µg/kg	53	1	VA09C11B	3/3/2009	3/12/2009	JAS
Toluene	**U**	µg/kg	110	1	VA09C11B	3/3/2009	3/12/2009	JAS
1,2,4-Trichlorobenzene	**U**	µg/kg	350	1	VA09C11B	3/3/2009	3/12/2009	JAS
1,1,1-Trichloroethane	**U**	µg/kg	53	1	VA09C11B	3/3/2009	3/12/2009	JAS
1,1,2-Trichloroethane	**U**	µg/kg	53	1	VA09C11B	3/3/2009	3/12/2009	JAS
Trichloroethene	**U**	µg/kg	53	1	VA09C11B	3/3/2009	3/12/2009	JAS
Trichlorofluoromethane	**U**	µg/kg	110	1	VA09C11B	3/3/2009	3/12/2009	JAS
1,2,3-Trichloropropane	**U**	µg/kg	110	1	VA09C11B	3/3/2009	3/12/2009	JAS
1,2,3-Trimethylbenzene	**U**	µg/kg	110	1	VA09C11B	3/3/2009	3/12/2009	JAS
1,2,4-Trimethylbenzene	**U**	µg/kg	110	1	VA09C11B	3/3/2009	3/12/2009	JAS

Analytical Laboratory Report

Client Identification:	**Envirologic Technologies, Inc.**	Sample Matrix:	**Soil/Solid**
Fibertec Project Number:	**33098**	Sample Number:	**33098-005**

Client Sample Information

Project Identification:	**Kzoo Co**	Client Sample Description:	**GSB-5@0.5'**
Project Number:	**080503**	Client Sample Number:	**5**
Sample Date:	**3/3/2009**	Chain of Custody Number:	**82430**

Comments: **All Results Reported On Dry Weight Basis. Percent Moisture = 5.17%.**

Definitions/ Qualifiers:

A: Spike recovery or precision unusable due to dilution.
B: The analyte was detected in the associated method blank.
E: The analyte was detected at a concentration greater than the calibration range, therefore the result is estimated.
J: The concentration is an estimated value.
U: The analyte was not detected at or above the reporting limit.
X: Matrix Interference has resulted in a raised reporting limit or distorted result.
W: Results reported on a wet-weight basis.
*: Value reported is outside QA limits

Analyte	Result	Units	Report Limit	Dilution Factor	Prep Batch	Prep Date/Time	Analysis Date/Time	Analyst
Plus List (VOCs), 5035 (EPA 5035/EPA 8260B)								
1,3,5-Trimethylbenzene	**U**	µg/kg	110	1	VA09C11B	3/3/2009	3/12/2009	JAS
Vinyl Chloride	**U**	µg/kg	42	1	VA09C11B	3/3/2009	3/12/2009	JAS
Xylenes	**U**	µg/kg	160	1	VA09C11B	3/3/2009	3/12/2009	JAS

Analytical Laboratory Report

Client Identification:	**Envirologic Technologies, Inc.**	Sample Matrix:	**Soil/Solid**
Fibertec Project Number:	**33098**	Sample Number:	**33098-005A**

Client Sample Information

Project Identification:	**Kzoo Co**	Client Sample Description:	**GSB-5@0.5'**
Project Number:	**080503**	Client Sample Number:	**5**
Sample Date:	**3/3/2009**	Chain of Custody Number:	**82430**

Comments: **All Results Reported On Dry Weight Basis. Percent Moisture = 5.17%.**

Definitions/ Qualifiers:
A: Spike recovery or precision unusable due to dilution.
B: The analyte was detected in the associated method blank.
E: The analyte was detected at a concentration greater than the calibration range, therefore the result is estimated.
J: The concentration is an estimated value.
U: The analyte was not detected at or above the reporting limit.
X: Matrix Interference has resulted in a raised reporting limit or distorted result.
W: Results reported on a wet-weight basis.
*: Value reported is outside QA limits

Analyte	Result	Units	Report Limit	Dilution Factor	Prep Batch	Prep Date/Time	Analysis Date/Time	Analyst
Dry Weight Determination (ASTM D 2974-87)								
Percent Moisture (Water Content)	**5.2**	%	0.1	1	MC090309	3/9/2009	3/10/2009	BMG
Trace Elements by ICP/MS (EPA 3050B/EPA 6020)								
Aluminum	**3000000**	µg/kg	1000	1	PT09C10D	3/10/2009	3/12/2009	MAP
Michigan 10 Elements by ICP/MS (EPA 3050B/EPA 6020)								
Arsenic	**3700**	µg/kg	100	1	PT09C10D	3/10/2009	3/12/2009	MAP
Barium	**41000**	µg/kg	1000	1	PT09C10D	3/10/2009	3/12/2009	MAP
Cadmium	**110**	µg/kg	50	1	PT09C10D	3/10/2009	3/12/2009	MAP
Chromium	**5800**	µg/kg	500	1	PT09C10D	3/10/2009	3/12/2009	MAP
Copper	**8000**	µg/kg	1000	1	PT09C10D	3/10/2009	3/12/2009	MAP
Lead	**11000**	µg/kg	1000	1	PT09C10D	3/10/2009	3/12/2009	MAP
Selenium	**280**	µg/kg	200	1	PT09C10D	3/10/2009	3/13/2009	MAP
Silver	**U**	µg/kg	100	1	PT09C10D	3/10/2009	3/12/2009	MAP
Zinc	**30000**	µg/kg	1000	1	PT09C10D	3/10/2009	3/12/2009	MAP
Mercury by CVAAS (EPA 7471A)								
Mercury	**U**	µg/kg	53	1	PM09C10B	3/10/2009	3/10/2009	ALM
Polynuclear Aromatic Hydrocarbons (PNAs) (EPA 3550B/EPA 8270C)								
Acenaphthene	**U**	µg/kg	350	1	PS09C11D	3/11/2009	3/12/2009	HLS
Acenaphthylene	**U**	µg/kg	350	1	PS09C11D	3/11/2009	3/12/2009	HLS
Anthracene	**U**	µg/kg	350	1	PS09C11D	3/11/2009	3/12/2009	HLS
Benzo(a)anthracene	**U**	µg/kg	350	1	PS09C11D	3/11/2009	3/12/2009	HLS
Benzo(a)pyrene	**U**	µg/kg	350	1	PS09C11D	3/11/2009	3/12/2009	HLS

Analytical Laboratory Report

Client Identification:	**Envirologic Technologies, Inc.**	Sample Matrix:	**Soil/Solid**
Fibertec Project Number:	**33098**	Sample Number:	**33098-005A**

Client Sample Information

Project Identification:	**Kzoo Co**	Client Sample Description:	**GSB-5@0.5'**
Project Number:	**080503**	Client Sample Number:	**5**
Sample Date:	**3/3/2009**	Chain of Custody Number:	**82430**

Comments: **All Results Reported On Dry Weight Basis. Percent Moisture = 5.17%.**

Definitions/ Qualifiers:

A: Spike recovery or precision unusable due to dilution.
B: The analyte was detected in the associated method blank.
E: The analyte was detected at a concentration greater than the calibration range, therefore the result is estimated.
J: The concentration is an estimated value.
U: The analyte was not detected at or above the reporting limit.
X: Matrix Interference has resulted in a raised reporting limit or distorted result.
W: Results reported on a wet-weight basis.
*: Value reported is outside QA limits

Analyte	Result	Units	Report Limit	Dilution Factor	Prep Batch	Prep Date/Time	Analysis Date/Time	Analyst
Polynuclear Aromatic Hydrocarbons (PNAs) (EPA 3550B/EPA 8270C)								
Benzo(b)fluoranthene	**U**	µg/kg	350	1	PS09C11D	3/11/2009	3/12/2009	HLS
Benzo(ghi)perylene	**U**	µg/kg	350	1	PS09C11D	3/11/2009	3/12/2009	HLS
Benzo(k)fluoranthene	**U**	µg/kg	350	1	PS09C11D	3/11/2009	3/12/2009	HLS
Chrysene	**U**	µg/kg	350	1	PS09C11D	3/11/2009	3/12/2009	HLS
Dibenzo(a,h)anthracene	**U**	µg/kg	350	1	PS09C11D	3/11/2009	3/12/2009	HLS
Fluoranthene	**U**	µg/kg	350	1	PS09C11D	3/11/2009	3/12/2009	HLS
Fluorene	**U**	µg/kg	350	1	PS09C11D	3/11/2009	3/12/2009	HLS
Indeno(1,2,3-cd)pyrene	**U**	µg/kg	350	1	PS09C11D	3/11/2009	3/12/2009	HLS
2-Methylnaphthalene	**U**	µg/kg	350	1	PS09C11D	3/11/2009	3/12/2009	HLS
Phenanthrene	**U**	µg/kg	350	1	PS09C11D	3/11/2009	3/12/2009	HLS
Pyrene	**U**	µg/kg	350	1	PS09C11D	3/11/2009	3/12/2009	HLS

Analytical Laboratory Report

Client Identification:	**Envirologic Technologies, Inc.**	Sample Matrix:	**Soil/Solid**
Fibertec Project Number:	**33098**	Sample Number:	**33098-006**

Client Sample Information

Project Identification:	**Kzoo Co**	Client Sample Description:	**GSB-6@0.5'**
Project Number:	**080503**	Client Sample Number:	**6**
Sample Date:	**3/3/2009**	Chain of Custody Number:	**82430**

Comments: **All Results Reported On Dry Weight Basis. Percent Moisture = 12.4%.**

Definitions/ Qualifiers:
A: Spike recovery or precision unusable due to dilution.
B: The analyte was detected in the associated method blank.
E: The analyte was detected at a concentration greater than the calibration range, therefore the result is estimated.
J: The concentration is an estimated value.
U: The analyte was not detected at or above the reporting limit.
X: Matrix Interference has resulted in a raised reporting limit or distorted result.
W: Results reported on a wet-weight basis.
*: Value reported is outside QA limits

Analyte	Result	Units	Report Limit	Dilution Factor	Prep Batch	Prep Date/Time	Analysis Date/Time	Analyst
Plus List (VOCs), 5035 (EPA 5035/EPA 8260B)								
Acetone	**U**	µg/kg	1100	1	VA09C11B	3/3/2009	3/12/2009	JAS
Acrylonitrile	**U**	µg/kg	110	1	VA09C11B	3/3/2009	3/12/2009	JAS
Benzene	**U**	µg/kg	57	1	VA09C11B	3/3/2009	3/12/2009	JAS
Bromobenzene	**U**	µg/kg	110	1	VA09C11B	3/3/2009	3/12/2009	JAS
Bromochloromethane	**U**	µg/kg	110	1	VA09C11B	3/3/2009	3/12/2009	JAS
Bromodichloromethane	**U**	µg/kg	110	1	VA09C11B	3/3/2009	3/12/2009	JAS
Bromoform	**U**	µg/kg	110	1	VA09C11B	3/3/2009	3/12/2009	JAS
Bromomethane	**U**	µg/kg	230	1	VA09C11B	3/3/2009	3/12/2009	JAS
2-Butanone	**U**	µg/kg	860	1	VA09C11B	3/3/2009	3/12/2009	JAS
n-Butylbenzene	**U**	µg/kg	57	1	VA09C11B	3/3/2009	3/12/2009	JAS
sec-Butylbenzene	**U**	µg/kg	57	1	VA09C11B	3/3/2009	3/12/2009	JAS
tert-Butylbenzene	**U**	µg/kg	57	1	VA09C11B	3/3/2009	3/12/2009	JAS
Carbon Disulfide	**U**	µg/kg	290	1	VA09C11B	3/3/2009	3/12/2009	JAS
Carbon Tetrachloride	**U**	µg/kg	57	1	VA09C11B	3/3/2009	3/12/2009	JAS
Chlorobenzene	**U**	µg/kg	57	1	VA09C11B	3/3/2009	3/12/2009	JAS
Chloroethane	**U**	µg/kg	290	1	VA09C11B	3/3/2009	3/12/2009	JAS
Chloroform	**U**	µg/kg	57	1	VA09C11B	3/3/2009	3/12/2009	JAS
Chloromethane	**U**	µg/kg	290	1	VA09C11B	3/3/2009	3/12/2009	JAS
2-Chlorotoluene	**U**	µg/kg	57	1	VA09C11B	3/3/2009	3/12/2009	JAS
Dibromochloromethane	**U**	µg/kg	110	1	VA09C11B	3/3/2009	3/12/2009	JAS

Analytical Laboratory Report

Client Identification:	**Envirologic Technologies, Inc.**	Sample Matrix:	**Soil/Solid**
Fibertec Project Number:	**33098**	Sample Number:	**33098-006**

Client Sample Information

Project Identification:	**Kzoo Co**	Client Sample Description:	**GSB-6@0.5'**
Project Number:	**080503**	Client Sample Number:	**6**
Sample Date:	**3/3/2009**	Chain of Custody Number:	**82430**

Comments: **All Results Reported On Dry Weight Basis. Percent Moisture = 12.4%.**

Definitions/ Qualifiers:
A: Spike recovery or precision unusable due to dilution.
B: The analyte was detected in the associated method blank.
E: The analyte was detected at a concentration greater than the calibration range, therefore the result is estimated.
J: The concentration is an estimated value.
U: The analyte was not detected at or above the reporting limit.
X: Matrix Interference has resulted in a raised reporting limit or distorted result.
W: Results reported on a wet-weight basis.
*: Value reported is outside QA limits

Analyte	Result	Units	Report Limit	Dilution Factor	Prep Batch	Prep Date/Time	Analysis Date/Time	Analyst
Plus List (VOCs), 5035 (EPA 5035/EPA 8260B)								
1,2-Dibromo-3-chloropropane	**U**	µg/kg	11	1	VA09C11B	3/3/2009	3/12/2009	JAS
Dibromomethane	**U**	µg/kg	290	1	VA09C11B	3/3/2009	3/12/2009	JAS
1,2-Dichlorobenzene	**U**	µg/kg	110	1	VA09C11B	3/3/2009	3/12/2009	JAS
1,3-Dichlorobenzene	**U**	µg/kg	110	1	VA09C11B	3/3/2009	3/12/2009	JAS
1,4-Dichlorobenzene	**U**	µg/kg	110	1	VA09C11B	3/3/2009	3/12/2009	JAS
trans-1,4-Dichloro-2-butene	**U**	µg/kg	110	1	VA09C11B	3/3/2009	3/12/2009	JAS
Dichlorodifluoromethane	**U**	µg/kg	290	1	VA09C11B	3/3/2009	3/12/2009	JAS
1,1-Dichloroethane	**U**	µg/kg	57	1	VA09C11B	3/3/2009	3/12/2009	JAS
1,2-Dichloroethane	**U**	µg/kg	57	1	VA09C11B	3/3/2009	3/12/2009	JAS
1,1-Dichloroethene	**U**	µg/kg	57	1	VA09C11B	3/3/2009	3/12/2009	JAS
cis-1,2-Dichloroethene	**U**	µg/kg	57	1	VA09C11B	3/3/2009	3/12/2009	JAS
trans-1,2-Dichloroethene	**U**	µg/kg	57	1	VA09C11B	3/3/2009	3/12/2009	JAS
1,2-Dichloropropane	**U**	µg/kg	57	1	VA09C11B	3/3/2009	3/12/2009	JAS
cis-1,3-Dichloropropene	**U**	µg/kg	57	1	VA09C11B	3/3/2009	3/12/2009	JAS
trans-1,3-Dichloropropene	**U**	µg/kg	57	1	VA09C11B	3/3/2009	3/12/2009	JAS
Diethyl Ether	**U**	µg/kg	230	1	VA09C11B	3/3/2009	3/12/2009	JAS
Ethylbenzene	**U**	µg/kg	57	1	VA09C11B	3/3/2009	3/12/2009	JAS
Ethylene Dibromide	**U**	µg/kg	23	1	VA09C11B	3/3/2009	3/12/2009	JAS
Hexachloroethane	**U**	µg/kg	110	1	VA09C11B	3/3/2009	3/12/2009	JAS
2-Hexanone	**U**	µg/kg	2900	1	VA09C11B	3/3/2009	3/12/2009	JAS

Analytical Laboratory Report

Client Identification:	**Envirologic Technologies, Inc.**	Sample Matrix:	**Soil/Solid**
Fibertec Project Number:	**33098**	Sample Number:	**33098-006**

Client Sample Information

Project Identification:	**Kzoo Co**	Client Sample Description:	**GSB-6@0.5'**
Project Number:	**080503**	Client Sample Number:	**6**
Sample Date:	**3/3/2009**	Chain of Custody Number:	**82430**

Comments: **All Results Reported On Dry Weight Basis. Percent Moisture = 12.4%.**

Definitions/ Qualifiers:
A: Spike recovery or precision unusable due to dilution.
B: The analyte was detected in the associated method blank.
E: The analyte was detected at a concentration greater than the calibration range, therefore the result is estimated.
J: The concentration is an estimated value.
U: The analyte was not detected at or above the reporting limit.
X: Matrix Interference has resulted in a raised reporting limit or distorted result.
W: Results reported on a wet-weight basis.
*: Value reported is outside QA limits

Analyte	Result	Units	Report Limit	Dilution Factor	Prep Batch	Prep Date/Time	Analysis Date/Time	Analyst
Plus List (VOCs), 5035 (EPA 5035/EPA 8260B)								
Isopropylbenzene	**U**	µg/kg	290	1	VA09C11B	3/3/2009	3/12/2009	JAS
4-Methyl-2-pentanone	**U**	µg/kg	2900	1	VA09C11B	3/3/2009	3/12/2009	JAS
MTBE	**U**	µg/kg	290	1	VA09C11B	3/3/2009	3/12/2009	JAS
Methyl Iodide	**U**	µg/kg	110	1	VA09C11B	3/3/2009	3/12/2009	JAS
Methylene Chloride	**U**	µg/kg	110	1	VA09C11B	3/3/2009	3/12/2009	JAS
Naphthalene	**U**	µg/kg	380	1	VA09C11B	3/3/2009	3/12/2009	JAS
n-Propylbenzene	**U**	µg/kg	110	1	VA09C11B	3/3/2009	3/12/2009	JAS
Styrene	**U**	µg/kg	57	1	VA09C11B	3/3/2009	3/12/2009	JAS
1,1,1,2-Tetrachloroethane	**U**	µg/kg	110	1	VA09C11B	3/3/2009	3/12/2009	JAS
1,1,2,2-Tetrachloroethane	**U**	µg/kg	57	1	VA09C11B	3/3/2009	3/12/2009	JAS
Tetrachloroethene	**U**	µg/kg	57	1	VA09C11B	3/3/2009	3/12/2009	JAS
Toluene	**U**	µg/kg	110	1	VA09C11B	3/3/2009	3/12/2009	JAS
1,2,4-Trichlorobenzene	**U**	µg/kg	380	1	VA09C11B	3/3/2009	3/12/2009	JAS
1,1,1-Trichloroethane	**U**	µg/kg	57	1	VA09C11B	3/3/2009	3/12/2009	JAS
1,1,2-Trichloroethane	**U**	µg/kg	57	1	VA09C11B	3/3/2009	3/12/2009	JAS
Trichloroethene	**U**	µg/kg	57	1	VA09C11B	3/3/2009	3/12/2009	JAS
Trichlorofluoromethane	**U**	µg/kg	110	1	VA09C11B	3/3/2009	3/12/2009	JAS
1,2,3-Trichloropropane	**U**	µg/kg	110	1	VA09C11B	3/3/2009	3/12/2009	JAS
1,2,3-Trimethylbenzene	**U**	µg/kg	110	1	VA09C11B	3/3/2009	3/12/2009	JAS
1,2,4-Trimethylbenzene	**U**	µg/kg	110	1	VA09C11B	3/3/2009	3/12/2009	JAS

Analytical Laboratory Report

Client Identification:	**Envirologic Technologies, Inc.**	Sample Matrix:	**Soil/Solid**
Fibertec Project Number:	**33098**	Sample Number:	**33098-006**

Client Sample Information

Project Identification:	**Kzoo Co**	Client Sample Description:	**GSB-6@0.5'**
Project Number:	**080503**	Client Sample Number:	**6**
Sample Date:	**3/3/2009**	Chain of Custody Number:	**82430**

Comments: **All Results Reported On Dry Weight Basis. Percent Moisture = 12.4%.**

Definitions/ Qualifiers:

A: Spike recovery or precision unusable due to dilution.
B: The analyte was detected in the associated method blank.
E: The analyte was detected at a concentration greater than the calibration range, therefore the result is estimated.
J: The concentration is an estimated value.
U: The analyte was not detected at or above the reporting limit.
X: Matrix Interference has resulted in a raised reporting limit or distorted result.
W: Results reported on a wet-weight basis.
*: Value reported is outside QA limits

Analyte	Result	Units	Report Limit	Dilution Factor	Prep Batch	Prep Date/Time	Analysis Date/Time	Analyst
Plus List (VOCs), 5035 (EPA 5035/EPA 8260B)								
1,3,5-Trimethylbenzene	**U**	µg/kg	110	1	VA09C11B	3/3/2009	3/12/2009	JAS
Vinyl Chloride	**U**	µg/kg	46	1	VA09C11B	3/3/2009	3/12/2009	JAS
Xylenes	**U**	µg/kg	170	1	VA09C11B	3/3/2009	3/12/2009	JAS

Analytical Laboratory Report

Client Identification:	**Envirologic Technologies, Inc.**	Sample Matrix:	**Soil/Solid**
Fibertec Project Number:	**33098**	Sample Number:	**33098-006A**

Client Sample Information

Project Identification:	**Kzoo Co**	Client Sample Description:	**GSB-6@0.5'**
Project Number:	**080503**	Client Sample Number:	**6**
Sample Date:	**3/3/2009**	Chain of Custody Number:	**82430**

Comments: **All Results Reported On Dry Weight Basis. Percent Moisture = 12.4%.**

Definitions/ Qualifiers:
A: Spike recovery or precision unusable due to dilution.
B: The analyte was detected in the associated method blank.
E: The analyte was detected at a concentration greater than the calibration range, therefore the result is estimated.
J: The concentration is an estimated value.
U: The analyte was not detected at or above the reporting limit.
X: Matrix Interference has resulted in a raised reporting limit or distorted result.
W: Results reported on a wet-weight basis.
*: Value reported is outside QA limits

Analyte	Result	Units	Report Limit	Dilution Factor	Prep Batch	Prep Date/Time	Analysis Date/Time	Analyst
Dry Weight Determination (ASTM D 2974-87)								
Percent Moisture (Water Content)	**12**	%	0.1	1	MC090309	3/9/2009	3/10/2009	BMG
Trace Elements by ICP/MS (EPA 3050B/EPA 6020)								
Aluminum	**4900000**	µg/kg	1000	1	PT09C10D	3/10/2009	3/12/2009	MAP
Michigan 10 Elements by ICP/MS (EPA 3050B/EPA 6020)								
Arsenic	**640**	µg/kg	100	1	PT09C10D	3/10/2009	3/12/2009	MAP
Barium	**60000**	µg/kg	1000	1	PT09C10D	3/10/2009	3/12/2009	MAP
Cadmium	**U**	µg/kg	50	1	PT09C10D	3/10/2009	3/12/2009	MAP
Chromium	**7700**	µg/kg	500	1	PT09C10D	3/10/2009	3/12/2009	MAP
Copper	**8900**	µg/kg	1000	1	PT09C10D	3/10/2009	3/12/2009	MAP
Lead	**7600**	µg/kg	1000	1	PT09C10D	3/10/2009	3/12/2009	MAP
Selenium	**U**	µg/kg	200	1	PT09C10D	3/10/2009	3/13/2009	MAP
Silver	**U**	µg/kg	100	1	PT09C10D	3/10/2009	3/12/2009	MAP
Zinc	**18000**	µg/kg	1000	1	PT09C10D	3/10/2009	3/12/2009	MAP
Mercury by CVAAS (EPA 7471A)								
Mercury	**66**	µg/kg	57	1	PM09C10B	3/10/2009	3/10/2009	ALM
Polynuclear Aromatic Hydrocarbons (PNAs) (EPA 3550B/EPA 8270C)								
Acenaphthene	**U**	µg/kg	380	1	PS09C11D	3/11/2009	3/12/2009	BDA
Acenaphthylene	**U**	µg/kg	380	1	PS09C11D	3/11/2009	3/12/2009	BDA
Anthracene	**U**	µg/kg	380	1	PS09C11D	3/11/2009	3/12/2009	BDA
Benzo(a)anthracene	**U**	µg/kg	380	1	PS09C11D	3/11/2009	3/12/2009	BDA
Benzo(a)pyrene	**U**	µg/kg	380	1	PS09C11D	3/11/2009	3/12/2009	BDA

Analytical Laboratory Report

Client Identification:	**Envirologic Technologies, Inc.**	Sample Matrix:	**Soil/Solid**
Fibertec Project Number:	**33098**	Sample Number:	**33098-006A**

Client Sample Information

Project Identification:	**Kzoo Co**	Client Sample Description:	**GSB-6@0.5'**
Project Number:	**080503**	Client Sample Number:	**6**
Sample Date:	**3/3/2009**	Chain of Custody Number:	**82430**

Comments: **All Results Reported On Dry Weight Basis. Percent Moisture = 12.4%.**

Definitions/ Qualifiers:

A: Spike recovery or precision unusable due to dilution.
B: The analyte was detected in the associated method blank.
E: The analyte was detected at a concentration greater than the calibration range, therefore the result is estimated.
J: The concentration is an estimated value.
U: The analyte was not detected at or above the reporting limit.
X: Matrix Interference has resulted in a raised reporting limit or distorted result.
W: Results reported on a wet-weight basis.
*: Value reported is outside QA limits

Analyte	Result	Units	Report Limit	Dilution Factor	Prep Batch	Prep Date/Time	Analysis Date/Time	Analyst
Polynuclear Aromatic Hydrocarbons (PNAs) (EPA 3550B/EPA 8270C)								
Benzo(b)fluoranthene	**U**	µg/kg	380	1	PS09C11D	3/11/2009	3/12/2009	BDA
Benzo(ghi)perylene	**U**	µg/kg	380	1	PS09C11D	3/11/2009	3/12/2009	BDA
Benzo(k)fluoranthene	**U**	µg/kg	380	1	PS09C11D	3/11/2009	3/12/2009	BDA
Chrysene	**U**	µg/kg	380	1	PS09C11D	3/11/2009	3/12/2009	BDA
Dibenzo(a,h)anthracene	**U**	µg/kg	380	1	PS09C11D	3/11/2009	3/12/2009	BDA
Fluoranthene	**U**	µg/kg	380	1	PS09C11D	3/11/2009	3/12/2009	BDA
Fluorene	**U**	µg/kg	380	1	PS09C11D	3/11/2009	3/12/2009	BDA
Indeno(1,2,3-cd)pyrene	**U**	µg/kg	380	1	PS09C11D	3/11/2009	3/12/2009	BDA
2-Methylnaphthalene	**U**	µg/kg	380	1	PS09C11D	3/11/2009	3/12/2009	BDA
Phenanthrene	**U**	µg/kg	380	1	PS09C11D	3/11/2009	3/12/2009	BDA
Pyrene	**U**	µg/kg	380	1	PS09C11D	3/11/2009	3/12/2009	BDA

Analytical Laboratory Report

Client Identification:	**Envirologic Technologies, Inc.**	Sample Matrix:	**Soil/Solid**
Fibertec Project Number:	**33098**	Sample Number:	**33098-007**

Client Sample Information

Project Identification:	**Kzoo Co**	Client Sample Description:	**GSB-7@0.5'**
Project Number:	**080503**	Client Sample Number:	**7**
Sample Date:	**3/3/2009**	Chain of Custody Number:	**82430**

Comments: **All Results Reported On Dry Weight Basis. Percent Moisture = 7.81%.**

Definitions/ Qualifiers:
A: Spike recovery or precision unusable due to dilution.
B: The analyte was detected in the associated method blank.
E: The analyte was detected at a concentration greater than the calibration range, therefore the result is estimated.
J: The concentration is an estimated value.
U: The analyte was not detected at or above the reporting limit.
X: Matrix Interference has resulted in a raised reporting limit or distorted result.
W: Results reported on a wet-weight basis.
*: Value reported is outside QA limits

Analyte	Result	Units	Report Limit	Dilution Factor	Prep Batch	Prep Date/Time	Analysis Date/Time	Analyst
Plus List (VOCs), 5035 (EPA 5035/EPA 8260B)								
Acetone	**U**	µg/kg	1100	1	VA09C11B	3/3/2009	3/12/2009	JAS
Acrylonitrile	**U**	µg/kg	110	1	VA09C11B	3/3/2009	3/12/2009	JAS
Benzene	**U**	µg/kg	54	1	VA09C11B	3/3/2009	3/12/2009	JAS
Bromobenzene	**U**	µg/kg	110	1	VA09C11B	3/3/2009	3/12/2009	JAS
Bromochloromethane	**U**	µg/kg	110	1	VA09C11B	3/3/2009	3/12/2009	JAS
Bromodichloromethane	**U**	µg/kg	110	1	VA09C11B	3/3/2009	3/12/2009	JAS
Bromoform	**U**	µg/kg	110	1	VA09C11B	3/3/2009	3/12/2009	JAS
Bromomethane	**U**	µg/kg	220	1	VA09C11B	3/3/2009	3/12/2009	JAS
2-Butanone	**U**	µg/kg	810	1	VA09C11B	3/3/2009	3/12/2009	JAS
n-Butylbenzene	**U**	µg/kg	54	1	VA09C11B	3/3/2009	3/12/2009	JAS
sec-Butylbenzene	**U**	µg/kg	54	1	VA09C11B	3/3/2009	3/12/2009	JAS
tert-Butylbenzene	**U**	µg/kg	54	1	VA09C11B	3/3/2009	3/12/2009	JAS
Carbon Disulfide	**U**	µg/kg	270	1	VA09C11B	3/3/2009	3/12/2009	JAS
Carbon Tetrachloride	**U**	µg/kg	54	1	VA09C11B	3/3/2009	3/12/2009	JAS
Chlorobenzene	**U**	µg/kg	54	1	VA09C11B	3/3/2009	3/12/2009	JAS
Chloroethane	**U**	µg/kg	270	1	VA09C11B	3/3/2009	3/12/2009	JAS
Chloroform	**U**	µg/kg	54	1	VA09C11B	3/3/2009	3/12/2009	JAS
Chloromethane	**U**	µg/kg	270	1	VA09C11B	3/3/2009	3/12/2009	JAS
2-Chlorotoluene	**U**	µg/kg	54	1	VA09C11B	3/3/2009	3/12/2009	JAS
Dibromochloromethane	**U**	µg/kg	110	1	VA09C11B	3/3/2009	3/12/2009	JAS

Analytical Laboratory Report

Client Identification:	**Envirologic Technologies, Inc.**	Sample Matrix:	**Soil/Solid**
Fibertec Project Number:	**33098**	Sample Number:	**33098-007**

Client Sample Information

Project Identification:	**Kzoo Co**	Client Sample Description:	**GSB-7@0.5'**
Project Number:	**080503**	Client Sample Number:	**7**
Sample Date:	**3/3/2009**	Chain of Custody Number:	**82430**

Comments: **All Results Reported On Dry Weight Basis. Percent Moisture = 7.81%.**

Definitions/ Qualifiers:
A: Spike recovery or precision unusable due to dilution.
B: The analyte was detected in the associated method blank.
E: The analyte was detected at a concentration greater than the calibration range, therefore the result is estimated.
J: The concentration is an estimated value.
U: The analyte was not detected at or above the reporting limit.
X: Matrix Interference has resulted in a raised reporting limit or distorted result.
W: Results reported on a wet-weight basis.
*: Value reported is outside QA limits

Analyte	Result	Units	Report Limit	Dilution Factor	Prep Batch	Prep Date/Time	Analysis Date/Time	Analyst
Plus List (VOCs), 5035 (EPA 5035/EPA 8260B)								
1,2-Dibromo-3-chloropropane	**U**	µg/kg	11	1	VA09C11B	3/3/2009	3/12/2009	JAS
Dibromomethane	**U**	µg/kg	270	1	VA09C11B	3/3/2009	3/12/2009	JAS
1,2-Dichlorobenzene	**U**	µg/kg	110	1	VA09C11B	3/3/2009	3/12/2009	JAS
1,3-Dichlorobenzene	**U**	µg/kg	110	1	VA09C11B	3/3/2009	3/12/2009	JAS
1,4-Dichlorobenzene	**U**	µg/kg	110	1	VA09C11B	3/3/2009	3/12/2009	JAS
trans-1,4-Dichloro-2-butene	**U**	µg/kg	110	1	VA09C11B	3/3/2009	3/12/2009	JAS
Dichlorodifluoromethane	**U**	µg/kg	270	1	VA09C11B	3/3/2009	3/12/2009	JAS
1,1-Dichloroethane	**U**	µg/kg	54	1	VA09C11B	3/3/2009	3/12/2009	JAS
1,2-Dichloroethane	**U**	µg/kg	54	1	VA09C11B	3/3/2009	3/12/2009	JAS
1,1-Dichloroethene	**U**	µg/kg	54	1	VA09C11B	3/3/2009	3/12/2009	JAS
cis-1,2-Dichloroethene	**U**	µg/kg	54	1	VA09C11B	3/3/2009	3/12/2009	JAS
trans-1,2-Dichloroethene	**U**	µg/kg	54	1	VA09C11B	3/3/2009	3/12/2009	JAS
1,2-Dichloropropane	**U**	µg/kg	54	1	VA09C11B	3/3/2009	3/12/2009	JAS
cis-1,3-Dichloropropene	**U**	µg/kg	54	1	VA09C11B	3/3/2009	3/12/2009	JAS
trans-1,3-Dichloropropene	**U**	µg/kg	54	1	VA09C11B	3/3/2009	3/12/2009	JAS
Diethyl Ether	**U**	µg/kg	220	1	VA09C11B	3/3/2009	3/12/2009	JAS
Ethylbenzene	**U**	µg/kg	54	1	VA09C11B	3/3/2009	3/12/2009	JAS
Ethylene Dibromide	**U**	µg/kg	22	1	VA09C11B	3/3/2009	3/12/2009	JAS
Hexachloroethane	**U**	µg/kg	110	1	VA09C11B	3/3/2009	3/12/2009	JAS
2-Hexanone	**U**	µg/kg	2700	1	VA09C11B	3/3/2009	3/12/2009	JAS

Analytical Laboratory Report

Client Identification:	**Envirologic Technologies, Inc.**	Sample Matrix:	**Soil/Solid**
Fibertec Project Number:	**33098**	Sample Number:	**33098-007**

Client Sample Information

Project Identification:	**Kzoo Co**	Client Sample Description:	**GSB-7@0.5'**
Project Number:	**080503**	Client Sample Number:	**7**
Sample Date:	**3/3/2009**	Chain of Custody Number:	**82430**

Comments: **All Results Reported On Dry Weight Basis. Percent Moisture = 7.81%.**

Definitions/ Qualifiers:
A: Spike recovery or precision unusable due to dilution.
B: The analyte was detected in the associated method blank.
E: The analyte was detected at a concentration greater than the calibration range, therefore the result is estimated.
J: The concentration is an estimated value.
U: The analyte was not detected at or above the reporting limit.
X: Matrix Interference has resulted in a raised reporting limit or distorted result.
W: Results reported on a wet-weight basis.
*: Value reported is outside QA limits

Analyte	Result	Units	Report Limit	Dilution Factor	Prep Batch	Prep Date/Time	Analysis Date/Time	Analyst
Plus List (VOCs), 5035 (EPA 5035/EPA 8260B)								
Isopropylbenzene	**U**	µg/kg	270	1	VA09C11B	3/3/2009	3/12/2009	JAS
4-Methyl-2-pentanone	**U**	µg/kg	2700	1	VA09C11B	3/3/2009	3/12/2009	JAS
MTBE	**U**	µg/kg	270	1	VA09C11B	3/3/2009	3/12/2009	JAS
Methyl Iodide	**U**	µg/kg	110	1	VA09C11B	3/3/2009	3/12/2009	JAS
Methylene Chloride	**U**	µg/kg	110	1	VA09C11B	3/3/2009	3/12/2009	JAS
Naphthalene	**U**	µg/kg	360	1	VA09C11B	3/3/2009	3/12/2009	JAS
n-Propylbenzene	**U**	µg/kg	110	1	VA09C11B	3/3/2009	3/12/2009	JAS
Styrene	**U**	µg/kg	54	1	VA09C11B	3/3/2009	3/12/2009	JAS
1,1,1,2-Tetrachloroethane	**U**	µg/kg	110	1	VA09C11B	3/3/2009	3/12/2009	JAS
1,1,2,2-Tetrachloroethane	**U**	µg/kg	54	1	VA09C11B	3/3/2009	3/12/2009	JAS
Tetrachloroethene	**U**	µg/kg	54	1	VA09C11B	3/3/2009	3/12/2009	JAS
Toluene	**U**	µg/kg	110	1	VA09C11B	3/3/2009	3/12/2009	JAS
1,2,4-Trichlorobenzene	**U**	µg/kg	360	1	VA09C11B	3/3/2009	3/12/2009	JAS
1,1,1-Trichloroethane	**U**	µg/kg	54	1	VA09C11B	3/3/2009	3/12/2009	JAS
1,1,2-Trichloroethane	**U**	µg/kg	54	1	VA09C11B	3/3/2009	3/12/2009	JAS
Trichloroethene	**U**	µg/kg	54	1	VA09C11B	3/3/2009	3/12/2009	JAS
Trichlorofluoromethane	**U**	µg/kg	110	1	VA09C11B	3/3/2009	3/12/2009	JAS
1,2,3-Trichloropropane	**U**	µg/kg	110	1	VA09C11B	3/3/2009	3/12/2009	JAS
1,2,3-Trimethylbenzene	**U**	µg/kg	110	1	VA09C11B	3/3/2009	3/12/2009	JAS
1,2,4-Trimethylbenzene	**U**	µg/kg	110	1	VA09C11B	3/3/2009	3/12/2009	JAS

Analytical Laboratory Report

Client Identification:	**Envirologic Technologies, Inc.**	Sample Matrix:	**Soil/Solid**
Fibertec Project Number:	**33098**	Sample Number:	**33098-007**

Client Sample Information

Project Identification:	**Kzoo Co**	Client Sample Description:	**GSB-7@0.5'**
Project Number:	**080503**	Client Sample Number:	**7**
Sample Date:	**3/3/2009**	Chain of Custody Number:	**82430**

Comments: **All Results Reported On Dry Weight Basis. Percent Moisture = 7.81%.**

Definitions/ Qualifiers:

A: Spike recovery or precision unusable due to dilution.
B: The analyte was detected in the associated method blank.
E: The analyte was detected at a concentration greater than the calibration range, therefore the result is estimated.
J: The concentration is an estimated value.
U: The analyte was not detected at or above the reporting limit.
X: Matrix Interference has resulted in a raised reporting limit or distorted result.
W: Results reported on a wet-weight basis.
*: Value reported is outside QA limits

Analyte	Result	Units	Report Limit	Dilution Factor	Prep Batch	Prep Date/Time	Analysis Date/Time	Analyst
Plus List (VOCs), 5035 (EPA 5035/EPA 8260B)								
1,3,5-Trimethylbenzene	**U**	µg/kg	110	1	VA09C11B	3/3/2009	3/12/2009	JAS
Vinyl Chloride	**U**	µg/kg	43	1	VA09C11B	3/3/2009	3/12/2009	JAS
Xylenes	**U**	µg/kg	160	1	VA09C11B	3/3/2009	3/12/2009	JAS

Analytical Laboratory Report

Client Identification:	**Envirologic Technologies, Inc.**	Sample Matrix:	**Soil/Solid**
Fibertec Project Number:	**33098**	Sample Number:	**33098-007A**

Client Sample Information

Project Identification:	**Kzoo Co**	Client Sample Description:	**GSB-7@0.5'**
Project Number:	**080503**	Client Sample Number:	**7**
Sample Date:	**3/3/2009**	Chain of Custody Number:	**82430**

Comments: **All Results Reported On Dry Weight Basis. Percent Moisture = 7.81%.**

Definitions/ Qualifiers:
A: Spike recovery or precision unusable due to dilution.
B: The analyte was detected in the associated method blank.
E: The analyte was detected at a concentration greater than the calibration range, therefore the result is estimated.
J: The concentration is an estimated value.
U: The analyte was not detected at or above the reporting limit.
X: Matrix Interference has resulted in a raised reporting limit or distorted result.
W: Results reported on a wet-weight basis.
*: Value reported is outside QA limits

Analyte	Result	Units	Report Limit	Dilution Factor	Prep Batch	Prep Date/Time	Analysis Date/Time	Analyst
Dry Weight Determination (ASTM D 2974-87)								
Percent Moisture (Water Content)	**7.8**	%	0.1	1	MC090309	3/9/2009	3/10/2009	BMG
Trace Elements by ICP/MS (EPA 3050B/EPA 6020)								
Aluminum	**4800000**	µg/kg	1000	1	PT09C10D	3/10/2009	3/12/2009	MAP
Michigan 10 Elements by ICP/MS (EPA 3050B/EPA 6020)								
Arsenic	**6200**	µg/kg	100	1	PT09C10D	3/10/2009	3/12/2009	MAP
Barium	**28000**	µg/kg	1000	1	PT09C10D	3/10/2009	3/12/2009	MAP
Cadmium	**100**	µg/kg	50	1	PT09C10D	3/10/2009	3/12/2009	MAP
Chromium	**12000**	µg/kg	500	1	PT09C10D	3/10/2009	3/12/2009	MAP
Copper	**13000**	µg/kg	1000	1	PT09C10D	3/10/2009	3/12/2009	MAP
Lead	**8200**	µg/kg	1000	1	PT09C10D	3/10/2009	3/12/2009	MAP
Selenium	**240**	µg/kg	200	1	PT09C10D	3/10/2009	3/13/2009	MAP
Silver	**U**	µg/kg	100	1	PT09C10D	3/10/2009	3/12/2009	MAP
Zinc	**35000**	µg/kg	1000	1	PT09C10D	3/10/2009	3/12/2009	MAP
Mercury by CVAAS (EPA 7471A)								
Mercury	**U**	µg/kg	54	1	PM09C10B	3/10/2009	3/10/2009	ALM
Polynuclear Aromatic Hydrocarbons (PNAs) (EPA 3550B/EPA 8270C)								
Acenaphthene	**U**	µg/kg	360	1	PS09C11D	3/11/2009	3/12/2009	BDA
Acenaphthylene	**U**	µg/kg	360	1	PS09C11D	3/11/2009	3/12/2009	BDA
Anthracene	**3600**	µg/kg	360	1	PS09C11D	3/11/2009	3/12/2009	BDA
Benzo(a)anthracene	**540**	µg/kg	360	1	PS09C11D	3/11/2009	3/12/2009	BDA
Benzo(a)pyrene	**380**	µg/kg	360	1	PS09C11D	3/11/2009	3/12/2009	BDA

Analytical Laboratory Report

Client Identification:	**Envirologic Technologies, Inc.**	Sample Matrix:	**Soil/Solid**
Fibertec Project Number:	**33098**	Sample Number:	**33098-007A**

Client Sample Information

Project Identification:	**Kzoo Co**	Client Sample Description:	**GSB-7@0.5'**
Project Number:	**080503**	Client Sample Number:	**7**
Sample Date:	**3/3/2009**	Chain of Custody Number:	**82430**

Comments: **All Results Reported On Dry Weight Basis. Percent Moisture = 7.81%.**

Definitions/ Qualifiers:

A: Spike recovery or precision unusable due to dilution.
B: The analyte was detected in the associated method blank.
E: The analyte was detected at a concentration greater than the calibration range, therefore the result is estimated.
J: The concentration is an estimated value.
U: The analyte was not detected at or above the reporting limit.
X: Matrix Interference has resulted in a raised reporting limit or distorted result.
W: Results reported on a wet-weight basis.
*: Value reported is outside QA limits

Analyte	Result	Units	Report Limit	Dilution Factor	Prep Batch	Prep Date/Time	Analysis Date/Time	Analyst
Polynuclear Aromatic Hydrocarbons (PNAs) (EPA 3550B/EPA 8270C)								
Benzo(b)fluoranthene	**670**	µg/kg	360	1	PS09C11D	3/11/2009	3/12/2009	BDA
Benzo(ghi)perylene	**U**	µg/kg	360	1	PS09C11D	3/11/2009	3/12/2009	BDA
Benzo(k)fluoranthene	**U**	µg/kg	360	1	PS09C11D	3/11/2009	3/12/2009	BDA
Chrysene	**860**	µg/kg	360	1	PS09C11D	3/11/2009	3/12/2009	BDA
Dibenzo(a,h)anthracene	**U**	µg/kg	360	1	PS09C11D	3/11/2009	3/12/2009	BDA
Fluoranthene	**2000**	µg/kg	360	1	PS09C11D	3/11/2009	3/12/2009	BDA
Fluorene	**U**	µg/kg	360	1	PS09C11D	3/11/2009	3/12/2009	BDA
Indeno(1,2,3-cd)pyrene	**U**	µg/kg	360	1	PS09C11D	3/11/2009	3/12/2009	BDA
2-Methylnaphthalene	**U**	µg/kg	360	1	PS09C11D	3/11/2009	3/12/2009	BDA
Phenanthrene	**1600**	µg/kg	360	1	PS09C11D	3/11/2009	3/12/2009	BDA
Pyrene	**1300**	µg/kg	360	1	PS09C11D	3/11/2009	3/12/2009	BDA

Analytical Laboratory Report

Client Identification:	**Envirologic Technologies, Inc.**	Sample Matrix:	**Soil/Solid**
Fibertec Project Number:	**33098**	Sample Number:	**33098-008**

Client Sample Information

Project Identification:	**Kzoo Co**	Client Sample Description:	**GSB-8@0.5'**
Project Number:	**080503**	Client Sample Number:	**8**
Sample Date:	**3/3/2009**	Chain of Custody Number:	**82430**

Comments: **All Results Reported On Dry Weight Basis. Percent Moisture = 42.0%.**

Definitions/ Qualifiers:
A: Spike recovery or precision unusable due to dilution.
B: The analyte was detected in the associated method blank.
E: The analyte was detected at a concentration greater than the calibration range, therefore the result is estimated.
J: The concentration is an estimated value.
U: The analyte was not detected at or above the reporting limit.
X: Matrix Interference has resulted in a raised reporting limit or distorted result.
W: Results reported on a wet-weight basis.
*: Value reported is outside QA limits

Analyte	Result	Units	Report Limit	Dilution Factor	Prep Batch	Prep Date/Time	Analysis Date/Time	Analyst
Plus List (VOCs), 5035 (EPA 5035/EPA 8260B)								
Acetone	**U**	µg/kg	1700	1	VA09C11B	3/3/2009	3/12/2009	JAS
Acrylonitrile	**U**	µg/kg	170	1	VA09C11B	3/3/2009	3/12/2009	JAS
Benzene	**U**	µg/kg	86	1	VA09C11B	3/3/2009	3/12/2009	JAS
Bromobenzene	**U**	µg/kg	170	1	VA09C11B	3/3/2009	3/12/2009	JAS
Bromochloromethane	**U**	µg/kg	170	1	VA09C11B	3/3/2009	3/12/2009	JAS
Bromodichloromethane	**U**	µg/kg	170	1	VA09C11B	3/3/2009	3/12/2009	JAS
Bromoform	**U**	µg/kg	170	1	VA09C11B	3/3/2009	3/12/2009	JAS
Bromomethane	**U**	µg/kg	340	1	VA09C11B	3/3/2009	3/12/2009	JAS
2-Butanone	**U**	µg/kg	1300	1	VA09C11B	3/3/2009	3/12/2009	JAS
n-Butylbenzene	**U**	µg/kg	86	1	VA09C11B	3/3/2009	3/12/2009	JAS
sec-Butylbenzene	**U**	µg/kg	86	1	VA09C11B	3/3/2009	3/12/2009	JAS
tert-Butylbenzene	**U**	µg/kg	86	1	VA09C11B	3/3/2009	3/12/2009	JAS
Carbon Disulfide	**U**	µg/kg	430	1	VA09C11B	3/3/2009	3/12/2009	JAS
Carbon Tetrachloride	**U**	µg/kg	86	1	VA09C11B	3/3/2009	3/12/2009	JAS
Chlorobenzene	**U**	µg/kg	86	1	VA09C11B	3/3/2009	3/12/2009	JAS
Chloroethane	**U**	µg/kg	430	1	VA09C11B	3/3/2009	3/12/2009	JAS
Chloroform	**U**	µg/kg	86	1	VA09C11B	3/3/2009	3/12/2009	JAS
Chloromethane	**U**	µg/kg	430	1	VA09C11B	3/3/2009	3/12/2009	JAS
2-Chlorotoluene	**U**	µg/kg	86	1	VA09C11B	3/3/2009	3/12/2009	JAS
Dibromochloromethane	**U**	µg/kg	170	1	VA09C11B	3/3/2009	3/12/2009	JAS

Analytical Laboratory Report

Client Identification:	**Envirologic Technologies, Inc.**	Sample Matrix:	**Soil/Solid**
Fibertec Project Number:	**33098**	Sample Number:	**33098-008**

Client Sample Information

Project Identification:	**Kzoo Co**	Client Sample Description:	**GSB-8@0.5'**
Project Number:	**080503**	Client Sample Number:	**8**
Sample Date:	**3/3/2009**	Chain of Custody Number:	**82430**

Comments: **All Results Reported On Dry Weight Basis. Percent Moisture = 42.0%.**

Definitions/ Qualifiers:
A: Spike recovery or precision unusable due to dilution.
B: The analyte was detected in the associated method blank.
E: The analyte was detected at a concentration greater than the calibration range, therefore the result is estimated.
J: The concentration is an estimated value.
U: The analyte was not detected at or above the reporting limit.
X: Matrix Interference has resulted in a raised reporting limit or distorted result.
W: Results reported on a wet-weight basis.
*: Value reported is outside QA limits

Analyte	Result	Units	Report Limit	Dilution Factor	Prep Batch	Prep Date/Time	Analysis Date/Time	Analyst
Plus List (VOCs), 5035 (EPA 5035/EPA 8260B)								
1,2-Dibromo-3-chloropropane	**U**	µg/kg	17	1	VA09C11B	3/3/2009	3/12/2009	JAS
Dibromomethane	**U**	µg/kg	430	1	VA09C11B	3/3/2009	3/12/2009	JAS
1,2-Dichlorobenzene	**U**	µg/kg	170	1	VA09C11B	3/3/2009	3/12/2009	JAS
1,3-Dichlorobenzene	**U**	µg/kg	170	1	VA09C11B	3/3/2009	3/12/2009	JAS
1,4-Dichlorobenzene	**U**	µg/kg	170	1	VA09C11B	3/3/2009	3/12/2009	JAS
trans-1,4-Dichloro-2-butene	**U**	µg/kg	170	1	VA09C11B	3/3/2009	3/12/2009	JAS
Dichlorodifluoromethane	**U**	µg/kg	430	1	VA09C11B	3/3/2009	3/12/2009	JAS
1,1-Dichloroethane	**U**	µg/kg	86	1	VA09C11B	3/3/2009	3/12/2009	JAS
1,2-Dichloroethane	**U**	µg/kg	86	1	VA09C11B	3/3/2009	3/12/2009	JAS
1,1-Dichloroethene	**U**	µg/kg	86	1	VA09C11B	3/3/2009	3/12/2009	JAS
cis-1,2-Dichloroethene	**U**	µg/kg	86	1	VA09C11B	3/3/2009	3/12/2009	JAS
trans-1,2-Dichloroethene	**U**	µg/kg	86	1	VA09C11B	3/3/2009	3/12/2009	JAS
1,2-Dichloropropane	**U**	µg/kg	86	1	VA09C11B	3/3/2009	3/12/2009	JAS
cis-1,3-Dichloropropene	**U**	µg/kg	86	1	VA09C11B	3/3/2009	3/12/2009	JAS
trans-1,3-Dichloropropene	**U**	µg/kg	86	1	VA09C11B	3/3/2009	3/12/2009	JAS
Diethyl Ether	**U**	µg/kg	340	1	VA09C11B	3/3/2009	3/12/2009	JAS
Ethylbenzene	**U**	µg/kg	86	1	VA09C11B	3/3/2009	3/12/2009	JAS
Ethylene Dibromide	**U**	µg/kg	34	1	VA09C11B	3/3/2009	3/12/2009	JAS
Hexachloroethane	**U**	µg/kg	170	1	VA09C11B	3/3/2009	3/12/2009	JAS
2-Hexanone	**U**	µg/kg	4300	1	VA09C11B	3/3/2009	3/12/2009	JAS

Analytical Laboratory Report

Client Identification:	**Envirologic Technologies, Inc.**	Sample Matrix:	**Soil/Solid**
Fibertec Project Number:	**33098**	Sample Number:	**33098-008**

Client Sample Information

Project Identification:	**Kzoo Co**	Client Sample Description:	**GSB-8@0.5'**
Project Number:	**080503**	Client Sample Number:	**8**
Sample Date:	**3/3/2009**	Chain of Custody Number:	**82430**

Comments: **All Results Reported On Dry Weight Basis. Percent Moisture = 42.0%.**

Definitions/ Qualifiers:
A: Spike recovery or precision unusable due to dilution.
B: The analyte was detected in the associated method blank.
E: The analyte was detected at a concentration greater than the calibration range, therefore the result is estimated.
J: The concentration is an estimated value.
U: The analyte was not detected at or above the reporting limit.
X: Matrix Interference has resulted in a raised reporting limit or distorted result.
W: Results reported on a wet-weight basis.
*: Value reported is outside QA limits

Analyte	Result	Units	Report Limit	Dilution Factor	Prep Batch	Prep Date/Time	Analysis Date/Time	Analyst
Plus List (VOCs), 5035 (EPA 5035/EPA 8260B)								
Isopropylbenzene	**U**	µg/kg	430	1	VA09C11B	3/3/2009	3/12/2009	JAS
4-Methyl-2-pentanone	**U**	µg/kg	4300	1	VA09C11B	3/3/2009	3/12/2009	JAS
MTBE	**U**	µg/kg	430	1	VA09C11B	3/3/2009	3/12/2009	JAS
Methyl Iodide	**U**	µg/kg	170	1	VA09C11B	3/3/2009	3/12/2009	JAS
Methylene Chloride	**U**	µg/kg	170	1	VA09C11B	3/3/2009	3/12/2009	JAS
Naphthalene	**U**	µg/kg	570	1	VA09C11B	3/3/2009	3/12/2009	JAS
n-Propylbenzene	**U**	µg/kg	170	1	VA09C11B	3/3/2009	3/12/2009	JAS
Styrene	**U**	µg/kg	86	1	VA09C11B	3/3/2009	3/12/2009	JAS
1,1,1,2-Tetrachloroethane	**U**	µg/kg	170	1	VA09C11B	3/3/2009	3/12/2009	JAS
1,1,2,2-Tetrachloroethane	**U**	µg/kg	86	1	VA09C11B	3/3/2009	3/12/2009	JAS
Tetrachloroethene	**U**	µg/kg	86	1	VA09C11B	3/3/2009	3/12/2009	JAS
Toluene	**U**	µg/kg	170	1	VA09C11B	3/3/2009	3/12/2009	JAS
1,2,4-Trichlorobenzene	**U**	µg/kg	570	1	VA09C11B	3/3/2009	3/12/2009	JAS
1,1,1-Trichloroethane	**U**	µg/kg	86	1	VA09C11B	3/3/2009	3/12/2009	JAS
1,1,2-Trichloroethane	**U**	µg/kg	86	1	VA09C11B	3/3/2009	3/12/2009	JAS
Trichloroethene	**U**	µg/kg	86	1	VA09C11B	3/3/2009	3/12/2009	JAS
Trichlorofluoromethane	**U**	µg/kg	170	1	VA09C11B	3/3/2009	3/12/2009	JAS
1,2,3-Trichloropropane	**U**	µg/kg	170	1	VA09C11B	3/3/2009	3/12/2009	JAS
1,2,3-Trimethylbenzene	**U**	µg/kg	170	1	VA09C11B	3/3/2009	3/12/2009	JAS
1,2,4-Trimethylbenzene	**U**	µg/kg	170	1	VA09C11B	3/3/2009	3/12/2009	JAS

Analytical Laboratory Report

Client Identification:	**Envirologic Technologies, Inc.**	Sample Matrix:	**Soil/Solid**
Fibertec Project Number:	**33098**	Sample Number:	**33098-008**

Client Sample Information

Project Identification:	**Kzoo Co**	Client Sample Description:	**GSB-8@0.5'**
Project Number:	**080503**	Client Sample Number:	**8**
Sample Date:	**3/3/2009**	Chain of Custody Number:	**82430**

Comments: **All Results Reported On Dry Weight Basis. Percent Moisture = 42.0%.**

Definitions/ Qualifiers:

A: Spike recovery or precision unusable due to dilution.
B: The analyte was detected in the associated method blank.
E: The analyte was detected at a concentration greater than the calibration range, therefore the result is estimated.
J: The concentration is an estimated value.
U: The analyte was not detected at or above the reporting limit.
X: Matrix Interference has resulted in a raised reporting limit or distorted result.
W: Results reported on a wet-weight basis.
*: Value reported is outside QA limits

Analyte	Result	Units	Report Limit	Dilution Factor	Prep Batch	Prep Date/Time	Analysis Date/Time	Analyst
Plus List (VOCs), 5035 (EPA 5035/EPA 8260B)								
1,3,5-Trimethylbenzene	**U**	µg/kg	170	1	VA09C11B	3/3/2009	3/12/2009	JAS
Vinyl Chloride	**U**	µg/kg	69	1	VA09C11B	3/3/2009	3/12/2009	JAS
Xylenes	**U**	µg/kg	260	1	VA09C11B	3/3/2009	3/12/2009	JAS

Analytical Laboratory Report

Client Identification:	**Envirologic Technologies, Inc.**	Sample Matrix:	**Soil/Solid**
Fibertec Project Number:	**33098**	Sample Number:	**33098-008A**

Client Sample Information

Project Identification:	**Kzoo Co**	Client Sample Description:	**GSB-8@0.5'**
Project Number:	**080503**	Client Sample Number:	**8**
Sample Date:	**3/3/2009**	Chain of Custody Number:	**82430**

Comments: **All Results Reported On Dry Weight Basis. Percent Moisture = 42.0%.**

Definitions/ Qualifiers:
A: Spike recovery or precision unusable due to dilution.
B: The analyte was detected in the associated method blank.
E: The analyte was detected at a concentration greater than the calibration range, therefore the result is estimated.
J: The concentration is an estimated value.
U: The analyte was not detected at or above the reporting limit.
X: Matrix Interference has resulted in a raised reporting limit or distorted result.
W: Results reported on a wet-weight basis.
*: Value reported is outside QA limits

Analyte	Result	Units	Report Limit	Dilution Factor	Prep Batch	Prep Date/Time	Analysis Date/Time	Analyst
Dry Weight Determination (ASTM D 2974-87)								
Percent Moisture (Water Content)	**42**	%	0.1	1	MC090309	3/9/2009	3/10/2009	BMG
Trace Elements by ICP/MS (EPA 3050B/EPA 6020)								
Aluminum	**3100000**	µg/kg	1000	1	PT09C10D	3/10/2009	3/12/2009	MAP
Michigan 10 Elements by ICP/MS (EPA 3050B/EPA 6020)								
Arsenic	**120000**	µg/kg	100	1	PT09C10D	3/10/2009	3/12/2009	MAP
Barium	**250000**	µg/kg	1000	1	PT09C10D	3/10/2009	3/12/2009	MAP
Cadmium	**870**	µg/kg	50	1	PT09C10D	3/10/2009	3/12/2009	MAP
Chromium	**4800**	µg/kg	500	1	PT09C10D	3/10/2009	3/12/2009	MAP
Copper	**18000**	µg/kg	1000	1	PT09C10D	3/10/2009	3/12/2009	MAP
Lead	**15000**	µg/kg	1000	1	PT09C10D	3/10/2009	3/12/2009	MAP
Selenium	**800**	µg/kg	200	1	PT09C10D	3/10/2009	3/13/2009	MAP
Silver	**U**	µg/kg	100	1	PT09C10D	3/10/2009	3/12/2009	MAP
Zinc	**62000**	µg/kg	1000	1	PT09C10D	3/10/2009	3/12/2009	MAP
Mercury by CVAAS (EPA 7471A)								
Mercury	**90**	µg/kg	86	1	PM09C10B	3/10/2009	3/10/2009	ALM
Polynuclear Aromatic Hydrocarbons (PNAs) (EPA 3550B/EPA 8270C)								
Acenaphthene	**U**	µg/kg	570	1	PS09C11D	3/11/2009	3/12/2009	BDA
Acenaphthylene	**U**	µg/kg	570	1	PS09C11D	3/11/2009	3/12/2009	BDA
Anthracene	**U**	µg/kg	570	1	PS09C11D	3/11/2009	3/12/2009	BDA
Benzo(a)anthracene	**U**	µg/kg	570	1	PS09C11D	3/11/2009	3/12/2009	BDA
Benzo(a)pyrene	**U**	µg/kg	570	1	PS09C11D	3/11/2009	3/12/2009	BDA

Analytical Laboratory Report

Client Identification:	**Envirologic Technologies, Inc.**	Sample Matrix:	**Soil/Solid**
Fibertec Project Number:	**33098**	Sample Number:	**33098-008A**

Client Sample Information

Project Identification:	**Kzoo Co**	Client Sample Description:	**GSB-8@0.5'**
Project Number:	**080503**	Client Sample Number:	**8**
Sample Date:	**3/3/2009**	Chain of Custody Number:	**82430**

Comments: **All Results Reported On Dry Weight Basis. Percent Moisture = 42.0%.**

Definitions/ Qualifiers:

A: Spike recovery or precision unusable due to dilution.
B: The analyte was detected in the associated method blank.
E: The analyte was detected at a concentration greater than the calibration range, therefore the result is estimated.
J: The concentration is an estimated value.
U: The analyte was not detected at or above the reporting limit.
X: Matrix Interference has resulted in a raised reporting limit or distorted result.
W: Results reported on a wet-weight basis.
*: Value reported is outside QA limits

Analyte	Result	Units	Report Limit	Dilution Factor	Prep Batch	Prep Date/Time	Analysis Date/Time	Analyst
Polynuclear Aromatic Hydrocarbons (PNAs) (EPA 3550B/EPA 8270C)								
Benzo(b)fluoranthene	**U**	µg/kg	570	1	PS09C11D	3/11/2009	3/12/2009	BDA
Benzo(ghi)perylene	**U**	µg/kg	570	1	PS09C11D	3/11/2009	3/12/2009	BDA
Benzo(k)fluoranthene	**U**	µg/kg	570	1	PS09C11D	3/11/2009	3/12/2009	BDA
Chrysene	**U**	µg/kg	570	1	PS09C11D	3/11/2009	3/12/2009	BDA
Dibenzo(a,h)anthracene	**U**	µg/kg	570	1	PS09C11D	3/11/2009	3/12/2009	BDA
Fluoranthene	**U**	µg/kg	570	1	PS09C11D	3/11/2009	3/12/2009	BDA
Fluorene	**U**	µg/kg	570	1	PS09C11D	3/11/2009	3/12/2009	BDA
Indeno(1,2,3-cd)pyrene	**U**	µg/kg	570	1	PS09C11D	3/11/2009	3/12/2009	BDA
2-Methylnaphthalene	**U**	µg/kg	570	1	PS09C11D	3/11/2009	3/12/2009	BDA
Phenanthrene	**U**	µg/kg	570	1	PS09C11D	3/11/2009	3/12/2009	BDA
Pyrene	**U**	µg/kg	570	1	PS09C11D	3/11/2009	3/12/2009	BDA

Analytical Laboratory Report

Client Identification:	**Envirologic Technologies, Inc.**	Sample Matrix:	**Soil/Solid**
Fibertec Project Number:	**33098**	Sample Number:	**33098-009**

Client Sample Information

Project Identification:	**Kzoo Co**	Client Sample Description:	**GSB-9@0.5'**
Project Number:	**080503**	Client Sample Number:	**9**
Sample Date:	**3/3/2009**	Chain of Custody Number:	**82430**

Comments: **All Results Reported On Dry Weight Basis. Percent Moisture = 7.49%.**

Definitions/ Qualifiers:
A: Spike recovery or precision unusable due to dilution.
B: The analyte was detected in the associated method blank.
E: The analyte was detected at a concentration greater than the calibration range, therefore the result is estimated.
J: The concentration is an estimated value.
U: The analyte was not detected at or above the reporting limit.
X: Matrix Interference has resulted in a raised reporting limit or distorted result.
W: Results reported on a wet-weight basis.
*: Value reported is outside QA limits

Analyte	Result	Units	Report Limit	Dilution Factor	Prep Batch	Prep Date/Time	Analysis Date/Time	Analyst
Plus List (VOCs), 5035 (EPA 5035/EPA 8260B)								
Acetone	**U**	µg/kg	1100	1	VA09C12a	3/3/2009	3/12/2009	JAS
Acrylonitrile	**U**	µg/kg	110	1	VA09C12a	3/3/2009	3/12/2009	JAS
Benzene	**U**	µg/kg	54	1	VA09C12a	3/3/2009	3/12/2009	JAS
Bromobenzene	**U**	µg/kg	110	1	VA09C12a	3/3/2009	3/12/2009	JAS
Bromochloromethane	**U**	µg/kg	110	1	VA09C12a	3/3/2009	3/12/2009	JAS
Bromodichloromethane	**U**	µg/kg	110	1	VA09C12a	3/3/2009	3/12/2009	JAS
Bromoform	**U**	µg/kg	110	1	VA09C12a	3/3/2009	3/12/2009	JAS
Bromomethane	**U**	µg/kg	220	1	VA09C12a	3/3/2009	3/12/2009	JAS
2-Butanone	**U**	µg/kg	810	1	VA09C12a	3/3/2009	3/12/2009	JAS
n-Butylbenzene	**U**	µg/kg	54	1	VA09C12a	3/3/2009	3/12/2009	JAS
sec-Butylbenzene	**U**	µg/kg	54	1	VA09C12a	3/3/2009	3/12/2009	JAS
tert-Butylbenzene	**U**	µg/kg	54	1	VA09C12a	3/3/2009	3/12/2009	JAS
Carbon Disulfide	**U**	µg/kg	270	1	VA09C12a	3/3/2009	3/12/2009	JAS
Carbon Tetrachloride	**U**	µg/kg	54	1	VA09C12a	3/3/2009	3/12/2009	JAS
Chlorobenzene	**U**	µg/kg	54	1	VA09C12a	3/3/2009	3/12/2009	JAS
Chloroethane	**U**	µg/kg	270	1	VA09C12a	3/3/2009	3/12/2009	JAS
Chloroform	**U**	µg/kg	54	1	VA09C12a	3/3/2009	3/12/2009	JAS
Chloromethane	**U**	µg/kg	270	1	VA09C12a	3/3/2009	3/12/2009	JAS
2-Chlorotoluene	**U**	µg/kg	54	1	VA09C12a	3/3/2009	3/12/2009	JAS
Dibromochloromethane	**U**	µg/kg	110	1	VA09C12a	3/3/2009	3/12/2009	JAS

Analytical Laboratory Report

Client Identification:	**Envirologic Technologies, Inc.**	Sample Matrix:	**Soil/Solid**
Fibertec Project Number:	**33098**	Sample Number:	**33098-009**

Client Sample Information

Project Identification:	**Kzoo Co**	Client Sample Description:	**GSB-9@0.5'**
Project Number:	**080503**	Client Sample Number:	**9**
Sample Date:	**3/3/2009**	Chain of Custody Number:	**82430**

Comments: **All Results Reported On Dry Weight Basis. Percent Moisture = 7.49%.**

Definitions/ Qualifiers:
A: Spike recovery or precision unusable due to dilution.
B: The analyte was detected in the associated method blank.
E: The analyte was detected at a concentration greater than the calibration range, therefore the result is estimated.
J: The concentration is an estimated value.
U: The analyte was not detected at or above the reporting limit.
X: Matrix Interference has resulted in a raised reporting limit or distorted result.
W: Results reported on a wet-weight basis.
*: Value reported is outside QA limits

Analyte	Result	Units	Report Limit	Dilution Factor	Prep Batch	Prep Date/Time	Analysis Date/Time	Analyst
Plus List (VOCs), 5035 (EPA 5035/EPA 8260B)								
1,2-Dibromo-3-chloropropane	**U**	µg/kg	11	1	VA09C12a	3/3/2009	3/12/2009	JAS
Dibromomethane	**U**	µg/kg	270	1	VA09C12a	3/3/2009	3/12/2009	JAS
1,2-Dichlorobenzene	**U**	µg/kg	110	1	VA09C12a	3/3/2009	3/12/2009	JAS
1,3-Dichlorobenzene	**U**	µg/kg	110	1	VA09C12a	3/3/2009	3/12/2009	JAS
1,4-Dichlorobenzene	**U**	µg/kg	110	1	VA09C12a	3/3/2009	3/12/2009	JAS
trans-1,4-Dichloro-2-butene	**U**	µg/kg	110	1	VA09C12a	3/3/2009	3/12/2009	JAS
Dichlorodifluoromethane	**U**	µg/kg	270	1	VA09C12a	3/3/2009	3/12/2009	JAS
1,1-Dichloroethane	**U**	µg/kg	54	1	VA09C12a	3/3/2009	3/12/2009	JAS
1,2-Dichloroethane	**U**	µg/kg	54	1	VA09C12a	3/3/2009	3/12/2009	JAS
1,1-Dichloroethene	**U**	µg/kg	54	1	VA09C12a	3/3/2009	3/12/2009	JAS
cis-1,2-Dichloroethene	**U**	µg/kg	54	1	VA09C12a	3/3/2009	3/12/2009	JAS
trans-1,2-Dichloroethene	**U**	µg/kg	54	1	VA09C12a	3/3/2009	3/12/2009	JAS
1,2-Dichloropropane	**U**	µg/kg	54	1	VA09C12a	3/3/2009	3/12/2009	JAS
cis-1,3-Dichloropropene	**U**	µg/kg	54	1	VA09C12a	3/3/2009	3/12/2009	JAS
trans-1,3-Dichloropropene	**U**	µg/kg	54	1	VA09C12a	3/3/2009	3/12/2009	JAS
Diethyl Ether	**U**	µg/kg	220	1	VA09C12a	3/3/2009	3/12/2009	JAS
Ethylbenzene	**U**	µg/kg	54	1	VA09C12a	3/3/2009	3/12/2009	JAS
Ethylene Dibromide	**U**	µg/kg	22	1	VA09C12a	3/3/2009	3/12/2009	JAS
Hexachloroethane	**U**	µg/kg	110	1	VA09C12a	3/3/2009	3/12/2009	JAS
2-Hexanone	**U**	µg/kg	2700	1	VA09C12a	3/3/2009	3/12/2009	JAS

Analytical Laboratory Report

Client Identification:	**Envirologic Technologies, Inc.**	Sample Matrix:	**Soil/Solid**
Fibertec Project Number:	**33098**	Sample Number:	**33098-009**

Client Sample Information

Project Identification:	**Kzoo Co**	Client Sample Description:	**GSB-9@0.5'**
Project Number:	**080503**	Client Sample Number:	**9**
Sample Date:	**3/3/2009**	Chain of Custody Number:	**82430**

Comments: **All Results Reported On Dry Weight Basis. Percent Moisture = 7.49%.**

Definitions/ Qualifiers:
A: Spike recovery or precision unusable due to dilution.
B: The analyte was detected in the associated method blank.
E: The analyte was detected at a concentration greater than the calibration range, therefore the result is estimated.
J: The concentration is an estimated value.
U: The analyte was not detected at or above the reporting limit.
X: Matrix Interference has resulted in a raised reporting limit or distorted result.
W: Results reported on a wet-weight basis.
*: Value reported is outside QA limits

Analyte	Result	Units	Report Limit	Dilution Factor	Prep Batch	Prep Date/Time	Analysis Date/Time	Analyst
Plus List (VOCs), 5035 (EPA 5035/EPA 8260B)								
Isopropylbenzene	**U**	µg/kg	270	1	VA09C12a	3/3/2009	3/12/2009	JAS
4-Methyl-2-pentanone	**U**	µg/kg	2700	1	VA09C12a	3/3/2009	3/12/2009	JAS
MTBE	**U**	µg/kg	270	1	VA09C12a	3/3/2009	3/12/2009	JAS
Methyl Iodide	**U**	µg/kg	110	1	VA09C12a	3/3/2009	3/12/2009	JAS
Methylene Chloride	**U**	µg/kg	110	1	VA09C12a	3/3/2009	3/12/2009	JAS
Naphthalene	**U**	µg/kg	360	1	VA09C12a	3/3/2009	3/12/2009	JAS
n-Propylbenzene	**U**	µg/kg	110	1	VA09C12a	3/3/2009	3/12/2009	JAS
Styrene	**U**	µg/kg	54	1	VA09C12a	3/3/2009	3/12/2009	JAS
1,1,1,2-Tetrachloroethane	**U**	µg/kg	110	1	VA09C12a	3/3/2009	3/12/2009	JAS
1,1,2,2-Tetrachloroethane	**U**	µg/kg	54	1	VA09C12a	3/3/2009	3/12/2009	JAS
Tetrachloroethene	**U**	µg/kg	54	1	VA09C12a	3/3/2009	3/12/2009	JAS
Toluene	**U**	µg/kg	110	1	VA09C12a	3/3/2009	3/12/2009	JAS
1,2,4-Trichlorobenzene	**U**	µg/kg	360	1	VA09C12a	3/3/2009	3/12/2009	JAS
1,1,1-Trichloroethane	**U**	µg/kg	54	1	VA09C12a	3/3/2009	3/12/2009	JAS
1,1,2-Trichloroethane	**U**	µg/kg	54	1	VA09C12a	3/3/2009	3/12/2009	JAS
Trichloroethene	**U**	µg/kg	54	1	VA09C12a	3/3/2009	3/12/2009	JAS
Trichlorofluoromethane	**U**	µg/kg	110	1	VA09C12a	3/3/2009	3/12/2009	JAS
1,2,3-Trichloropropane	**U**	µg/kg	110	1	VA09C12a	3/3/2009	3/12/2009	JAS
1,2,3-Trimethylbenzene	**U**	µg/kg	110	1	VA09C12a	3/3/2009	3/12/2009	JAS
1,2,4-Trimethylbenzene	**U**	µg/kg	110	1	VA09C12a	3/3/2009	3/12/2009	JAS

Analytical Laboratory Report

Client Identification:	**Envirologic Technologies, Inc.**	Sample Matrix:	**Soil/Solid**
Fibertec Project Number:	**33098**	Sample Number:	**33098-009**

Client Sample Information

Project Identification:	**Kzoo Co**	Client Sample Description:	**GSB-9@0.5'**
Project Number:	**080503**	Client Sample Number:	**9**
Sample Date:	**3/3/2009**	Chain of Custody Number:	**82430**

Comments: **All Results Reported On Dry Weight Basis. Percent Moisture = 7.49%.**

Definitions/ Qualifiers:

A: Spike recovery or precision unusable due to dilution.
B: The analyte was detected in the associated method blank.
E: The analyte was detected at a concentration greater than the calibration range, therefore the result is estimated.
J: The concentration is an estimated value.
U: The analyte was not detected at or above the reporting limit.
X: Matrix Interference has resulted in a raised reporting limit or distorted result.
W: Results reported on a wet-weight basis.
*: Value reported is outside QA limits

Analyte	Result	Units	Report Limit	Dilution Factor	Prep Batch	Prep Date/Time	Analysis Date/Time	Analyst
Plus List (VOCs), 5035 (EPA 5035/EPA 8260B)								
1,3,5-Trimethylbenzene	**U**	µg/kg	110	1	VA09C12a	3/3/2009	3/12/2009	JAS
Vinyl Chloride	**U**	µg/kg	43	1	VA09C12a	3/3/2009	3/12/2009	JAS
Xylenes	**U**	µg/kg	160	1	VA09C12a	3/3/2009	3/12/2009	JAS

Analytical Laboratory Report

Client Identification:	**Envirologic Technologies, Inc.**	Sample Matrix:	**Soil/Solid**
Fibertec Project Number:	**33098**	Sample Number:	**33098-009A**

Client Sample Information

Project Identification:	**Kzoo Co**	Client Sample Description:	**GSB-9@0.5'**
Project Number:	**080503**	Client Sample Number:	**9**
Sample Date:	**3/3/2009**	Chain of Custody Number:	**82430**

Comments: **All Results Reported On Dry Weight Basis. Percent Moisture = 7.49%.**

Definitions/ Qualifiers:
A: Spike recovery or precision unusable due to dilution.
B: The analyte was detected in the associated method blank.
E: The analyte was detected at a concentration greater than the calibration range, therefore the result is estimated.
J: The concentration is an estimated value.
U: The analyte was not detected at or above the reporting limit.
X: Matrix Interference has resulted in a raised reporting limit or distorted result.
W: Results reported on a wet-weight basis.
*: Value reported is outside QA limits

Analyte	Result	Units	Report Limit	Dilution Factor	Prep Batch	Prep Date/Time	Analysis Date/Time	Analyst
Dry Weight Determination (ASTM D 2974-87)								
Percent Moisture (Water Content)	**7.5**	%	0.1	1	MC090309	3/9/2009	3/10/2009	BMG
Trace Elements by ICP/MS (EPA 3050B/EPA 6020)								
Aluminum	**2800000**	µg/kg	1000	1	PT09C10D	3/10/2009	3/12/2009	MAP
Michigan 10 Elements by ICP/MS (EPA 3050B/EPA 6020)								
Arsenic	**11000**	µg/kg	100	1	PT09C10D	3/10/2009	3/12/2009	MAP
Barium	**32000**	µg/kg	1000	1	PT09C10D	3/10/2009	3/12/2009	MAP
Cadmium	**230**	µg/kg	50	1	PT09C10D	3/10/2009	3/12/2009	MAP
Chromium	**6900**	µg/kg	500	1	PT09C10D	3/10/2009	3/12/2009	MAP
Copper	**16000**	µg/kg	1000	1	PT09C10D	3/10/2009	3/12/2009	MAP
Lead	**23000**	µg/kg	1000	1	PT09C10D	3/10/2009	3/12/2009	MAP
Selenium	**U**	µg/kg	200	1	PT09C10D	3/10/2009	3/13/2009	MAP
Silver	**U**	µg/kg	100	1	PT09C10D	3/10/2009	3/12/2009	MAP
Zinc	**65000**	µg/kg	1000	1	PT09C10D	3/10/2009	3/12/2009	MAP
Mercury by CVAAS (EPA 7471A)								
Mercury	**U**	µg/kg	54	1	PM09C10B	3/10/2009	3/10/2009	ALM
Polynuclear Aromatic Hydrocarbons (PNAs) (EPA 3550B/EPA 8270C)								
Acenaphthene	**U**	µg/kg	360	1	PS09C11D	3/11/2009	3/12/2009	BDA
Acenaphthylene	**U**	µg/kg	360	1	PS09C11D	3/11/2009	3/12/2009	BDA
Anthracene	**U**	µg/kg	360	1	PS09C11D	3/11/2009	3/12/2009	BDA
Benzo(a)anthracene	**450**	µg/kg	360	1	PS09C11D	3/11/2009	3/12/2009	BDA
Benzo(a)pyrene	**430**	µg/kg	360	1	PS09C11D	3/11/2009	3/12/2009	BDA

Analytical Laboratory Report

Client Identification:	**Envirologic Technologies, Inc.**	Sample Matrix:	**Soil/Solid**
Fibertec Project Number:	**33098**	Sample Number:	**33098-009A**

Client Sample Information

Project Identification:	**Kzoo Co**	Client Sample Description:	**GSB-9@0.5'**
Project Number:	**080503**	Client Sample Number:	**9**
Sample Date:	**3/3/2009**	Chain of Custody Number:	**82430**

Comments: **All Results Reported On Dry Weight Basis. Percent Moisture = 7.49%.**

Definitions/ Qualifiers:

A: Spike recovery or precision unusable due to dilution.
B: The analyte was detected in the associated method blank.
E: The analyte was detected at a concentration greater than the calibration range, therefore the result is estimated.
J: The concentration is an estimated value.
U: The analyte was not detected at or above the reporting limit.
X: Matrix Interference has resulted in a raised reporting limit or distorted result.
W: Results reported on a wet-weight basis.
*: Value reported is outside QA limits

Analyte	Result	Units	Report Limit	Dilution Factor	Prep Batch	Prep Date/Time	Analysis Date/Time	Analyst
Polynuclear Aromatic Hydrocarbons (PNAs) (EPA 3550B/EPA 8270C)								
Benzo(b)fluoranthene	**720**	µg/kg	360	1	PS09C11D	3/11/2009	3/12/2009	BDA
Benzo(ghi)perylene	**U**	µg/kg	360	1	PS09C11D	3/11/2009	3/12/2009	BDA
Benzo(k)fluoranthene	**U**	µg/kg	360	1	PS09C11D	3/11/2009	3/12/2009	BDA
Chrysene	**540**	µg/kg	360	1	PS09C11D	3/11/2009	3/12/2009	BDA
Dibenzo(a,h)anthracene	**U**	µg/kg	360	1	PS09C11D	3/11/2009	3/12/2009	BDA
Fluoranthene	**1100**	µg/kg	360	1	PS09C11D	3/11/2009	3/12/2009	BDA
Fluorene	**U**	µg/kg	360	1	PS09C11D	3/11/2009	3/12/2009	BDA
Indeno(1,2,3-cd)pyrene	**U**	µg/kg	360	1	PS09C11D	3/11/2009	3/12/2009	BDA
2-Methylnaphthalene	**U**	µg/kg	360	1	PS09C11D	3/11/2009	3/12/2009	BDA
Phenanthrene	**540**	µg/kg	360	1	PS09C11D	3/11/2009	3/12/2009	BDA
Pyrene	**930**	µg/kg	360	1	PS09C11D	3/11/2009	3/12/2009	BDA

Analytical Laboratory Report

Client Identification:	**Envirologic Technologies, Inc.**	Sample Matrix:	**Soil/Solid**
Fibertec Project Number:	**33098**	Sample Number:	**33098-010**

Client Sample Information

Project Identification:	**Kzoo Co**	Client Sample Description:	**GSB-11@0.5'**
Project Number:	**080503**	Client Sample Number:	**10**
Sample Date:	**3/3/2009**	Chain of Custody Number:	**82430**

Comments: **All Results Reported On Dry Weight Basis. Percent Moisture = 19.2%.**

Definitions/ Qualifiers:
A: Spike recovery or precision unusable due to dilution.
B: The analyte was detected in the associated method blank.
E: The analyte was detected at a concentration greater than the calibration range, therefore the result is estimated.
J: The concentration is an estimated value.
U: The analyte was not detected at or above the reporting limit.
X: Matrix Interference has resulted in a raised reporting limit or distorted result.
W: Results reported on a wet-weight basis.
*: Value reported is outside QA limits

Analyte	Result	Units	Report Limit	Dilution Factor	Prep Batch	Prep Date/Time	Analysis Date/Time	Analyst
Plus List (VOCs), 5035 (EPA 5035/EPA 8260B)								
Acetone	**U**	µg/kg	1200	1	VA09C12a	3/3/2009	3/12/2009	JAS
Acrylonitrile	**U**	µg/kg	120	1	VA09C12a	3/3/2009	3/12/2009	JAS
Benzene	**U**	µg/kg	62	1	VA09C12a	3/3/2009	3/12/2009	JAS
Bromobenzene	**U**	µg/kg	120	1	VA09C12a	3/3/2009	3/12/2009	JAS
Bromochloromethane	**U**	µg/kg	120	1	VA09C12a	3/3/2009	3/12/2009	JAS
Bromodichloromethane	**U**	µg/kg	120	1	VA09C12a	3/3/2009	3/12/2009	JAS
Bromoform	**U**	µg/kg	120	1	VA09C12a	3/3/2009	3/12/2009	JAS
Bromomethane	**U**	µg/kg	250	1	VA09C12a	3/3/2009	3/12/2009	JAS
2-Butanone	**U**	µg/kg	930	1	VA09C12a	3/3/2009	3/12/2009	JAS
n-Butylbenzene	**U**	µg/kg	62	1	VA09C12a	3/3/2009	3/12/2009	JAS
sec-Butylbenzene	**U**	µg/kg	62	1	VA09C12a	3/3/2009	3/12/2009	JAS
tert-Butylbenzene	**U**	µg/kg	62	1	VA09C12a	3/3/2009	3/12/2009	JAS
Carbon Disulfide	**U**	µg/kg	310	1	VA09C12a	3/3/2009	3/12/2009	JAS
Carbon Tetrachloride	**U**	µg/kg	62	1	VA09C12a	3/3/2009	3/12/2009	JAS
Chlorobenzene	**U**	µg/kg	62	1	VA09C12a	3/3/2009	3/12/2009	JAS
Chloroethane	**U**	µg/kg	310	1	VA09C12a	3/3/2009	3/12/2009	JAS
Chloroform	**U**	µg/kg	62	1	VA09C12a	3/3/2009	3/12/2009	JAS
Chloromethane	**U**	µg/kg	310	1	VA09C12a	3/3/2009	3/12/2009	JAS
2-Chlorotoluene	**U**	µg/kg	62	1	VA09C12a	3/3/2009	3/12/2009	JAS
Dibromochloromethane	**U**	µg/kg	120	1	VA09C12a	3/3/2009	3/12/2009	JAS

Analytical Laboratory Report

Client Identification:	**Envirologic Technologies, Inc.**	Sample Matrix:	**Soil/Solid**
Fibertec Project Number:	**33098**	Sample Number:	**33098-010**

Client Sample Information

Project Identification:	**Kzoo Co**	Client Sample Description:	**GSB-11@0.5'**
Project Number:	**080503**	Client Sample Number:	**10**
Sample Date:	**3/3/2009**	Chain of Custody Number:	**82430**

Comments: **All Results Reported On Dry Weight Basis. Percent Moisture = 19.2%.**

Definitions/ Qualifiers:
A: Spike recovery or precision unusable due to dilution.
B: The analyte was detected in the associated method blank.
E: The analyte was detected at a concentration greater than the calibration range, therefore the result is estimated.
J: The concentration is an estimated value.
U: The analyte was not detected at or above the reporting limit.
X: Matrix Interference has resulted in a raised reporting limit or distorted result.
W: Results reported on a wet-weight basis.
*: Value reported is outside QA limits

Analyte	Result	Units	Report Limit	Dilution Factor	Prep Batch	Prep Date/Time	Analysis Date/Time	Analyst
Plus List (VOCs), 5035 (EPA 5035/EPA 8260B)								
1,2-Dibromo-3-chloropropane	**U**	µg/kg	12	1	VA09C12a	3/3/2009	3/12/2009	JAS
Dibromomethane	**U**	µg/kg	310	1	VA09C12a	3/3/2009	3/12/2009	JAS
1,2-Dichlorobenzene	**U**	µg/kg	120	1	VA09C12a	3/3/2009	3/12/2009	JAS
1,3-Dichlorobenzene	**U**	µg/kg	120	1	VA09C12a	3/3/2009	3/12/2009	JAS
1,4-Dichlorobenzene	**U**	µg/kg	120	1	VA09C12a	3/3/2009	3/12/2009	JAS
trans-1,4-Dichloro-2-butene	**U**	µg/kg	120	1	VA09C12a	3/3/2009	3/12/2009	JAS
Dichlorodifluoromethane	**U**	µg/kg	310	1	VA09C12a	3/3/2009	3/12/2009	JAS
1,1-Dichloroethane	**U**	µg/kg	62	1	VA09C12a	3/3/2009	3/12/2009	JAS
1,2-Dichloroethane	**U**	µg/kg	62	1	VA09C12a	3/3/2009	3/12/2009	JAS
1,1-Dichloroethene	**U**	µg/kg	62	1	VA09C12a	3/3/2009	3/12/2009	JAS
cis-1,2-Dichloroethene	**U**	µg/kg	62	1	VA09C12a	3/3/2009	3/12/2009	JAS
trans-1,2-Dichloroethene	**U**	µg/kg	62	1	VA09C12a	3/3/2009	3/12/2009	JAS
1,2-Dichloropropane	**U**	µg/kg	62	1	VA09C12a	3/3/2009	3/12/2009	JAS
cis-1,3-Dichloropropene	**U**	µg/kg	62	1	VA09C12a	3/3/2009	3/12/2009	JAS
trans-1,3-Dichloropropene	**U**	µg/kg	62	1	VA09C12a	3/3/2009	3/12/2009	JAS
Diethyl Ether	**U**	µg/kg	250	1	VA09C12a	3/3/2009	3/12/2009	JAS
Ethylbenzene	**U**	µg/kg	62	1	VA09C12a	3/3/2009	3/12/2009	JAS
Ethylene Dibromide	**U**	µg/kg	25	1	VA09C12a	3/3/2009	3/12/2009	JAS
Hexachloroethane	**U**	µg/kg	120	1	VA09C12a	3/3/2009	3/12/2009	JAS
2-Hexanone	**U**	µg/kg	3100	1	VA09C12a	3/3/2009	3/12/2009	JAS

Analytical Laboratory Report

Client Identification:	**Envirologic Technologies, Inc.**	Sample Matrix:	**Soil/Solid**
Fibertec Project Number:	**33098**	Sample Number:	**33098-010**

Client Sample Information

Project Identification:	**Kzoo Co**	Client Sample Description:	**GSB-11@0.5'**
Project Number:	**080503**	Client Sample Number:	**10**
Sample Date:	**3/3/2009**	Chain of Custody Number:	**82430**

Comments: **All Results Reported On Dry Weight Basis. Percent Moisture = 19.2%.**

Definitions/ Qualifiers:
A: Spike recovery or precision unusable due to dilution.
B: The analyte was detected in the associated method blank.
E: The analyte was detected at a concentration greater than the calibration range, therefore the result is estimated.
J: The concentration is an estimated value.
U: The analyte was not detected at or above the reporting limit.
X: Matrix Interference has resulted in a raised reporting limit or distorted result.
W: Results reported on a wet-weight basis.
*: Value reported is outside QA limits

Analyte	Result	Units	Report Limit	Dilution Factor	Prep Batch	Prep Date/Time	Analysis Date/Time	Analyst
Plus List (VOCs), 5035 (EPA 5035/EPA 8260B)								
Isopropylbenzene	**U**	µg/kg	310	1	VA09C12a	3/3/2009	3/12/2009	JAS
4-Methyl-2-pentanone	**U**	µg/kg	3100	1	VA09C12a	3/3/2009	3/12/2009	JAS
MTBE	**U**	µg/kg	310	1	VA09C12a	3/3/2009	3/12/2009	JAS
Methyl Iodide	**U**	µg/kg	120	1	VA09C12a	3/3/2009	3/12/2009	JAS
Methylene Chloride	**U**	µg/kg	120	1	VA09C12a	3/3/2009	3/12/2009	JAS
Naphthalene	**U**	µg/kg	410	1	VA09C12a	3/3/2009	3/12/2009	JAS
n-Propylbenzene	**U**	µg/kg	120	1	VA09C12a	3/3/2009	3/12/2009	JAS
Styrene	**U**	µg/kg	62	1	VA09C12a	3/3/2009	3/12/2009	JAS
1,1,1,2-Tetrachloroethane	**U**	µg/kg	120	1	VA09C12a	3/3/2009	3/12/2009	JAS
1,1,2,2-Tetrachloroethane	**U**	µg/kg	62	1	VA09C12a	3/3/2009	3/12/2009	JAS
Tetrachloroethene	**U**	µg/kg	62	1	VA09C12a	3/3/2009	3/12/2009	JAS
Toluene	**U**	µg/kg	120	1	VA09C12a	3/3/2009	3/12/2009	JAS
1,2,4-Trichlorobenzene	**U**	µg/kg	410	1	VA09C12a	3/3/2009	3/12/2009	JAS
1,1,1-Trichloroethane	**U**	µg/kg	62	1	VA09C12a	3/3/2009	3/12/2009	JAS
1,1,2-Trichloroethane	**U**	µg/kg	62	1	VA09C12a	3/3/2009	3/12/2009	JAS
Trichloroethene	**U**	µg/kg	62	1	VA09C12a	3/3/2009	3/12/2009	JAS
Trichlorofluoromethane	**U**	µg/kg	120	1	VA09C12a	3/3/2009	3/12/2009	JAS
1,2,3-Trichloropropane	**U**	µg/kg	120	1	VA09C12a	3/3/2009	3/12/2009	JAS
1,2,3-Trimethylbenzene	**U**	µg/kg	120	1	VA09C12a	3/3/2009	3/12/2009	JAS
1,2,4-Trimethylbenzene	**U**	µg/kg	120	1	VA09C12a	3/3/2009	3/12/2009	JAS

Analytical Laboratory Report

Client Identification:	**Envirologic Technologies, Inc.**	Sample Matrix:	**Soil/Solid**
Fibertec Project Number:	**33098**	Sample Number:	**33098-010**

Client Sample Information

Project Identification:	**Kzoo Co**	Client Sample Description:	**GSB-11@0.5'**
Project Number:	**080503**	Client Sample Number:	**10**
Sample Date:	**3/3/2009**	Chain of Custody Number:	**82430**

Comments: **All Results Reported On Dry Weight Basis. Percent Moisture = 19.2%.**

Definitions/ Qualifiers:

A: Spike recovery or precision unusable due to dilution.
B: The analyte was detected in the associated method blank.
E: The analyte was detected at a concentration greater than the calibration range, therefore the result is estimated.
J: The concentration is an estimated value.
U: The analyte was not detected at or above the reporting limit.
X: Matrix Interference has resulted in a raised reporting limit or distorted result.
W: Results reported on a wet-weight basis.
*: Value reported is outside QA limits

Analyte	Result	Units	Report Limit	Dilution Factor	Prep Batch	Prep Date/Time	Analysis Date/Time	Analyst
Plus List (VOCs), 5035 (EPA 5035/EPA 8260B)								
1,3,5-Trimethylbenzene	**U**	µg/kg	120	1	VA09C12a	3/3/2009	3/12/2009	JAS
Vinyl Chloride	**U**	µg/kg	49	1	VA09C12a	3/3/2009	3/12/2009	JAS
Xylenes	**U**	µg/kg	190	1	VA09C12a	3/3/2009	3/12/2009	JAS

Analytical Laboratory Report

Client Identification:	**Envirologic Technologies, Inc.**	Sample Matrix:	**Soil/Solid**
Fibertec Project Number:	**33098**	Sample Number:	**33098-010A**

Client Sample Information

Project Identification:	**Kzoo Co**	Client Sample Description:	**GSB-11@0.5'**
Project Number:	**080503**	Client Sample Number:	**10**
Sample Date:	**3/3/2009**	Chain of Custody Number:	**82430**

Comments: **All Results Reported On Dry Weight Basis. Percent Moisture = 19.2%.**

Definitions/ Qualifiers:

A: Spike recovery or precision unusable due to dilution.
B: The analyte was detected in the associated method blank.
E: The analyte was detected at a concentration greater than the calibration range, therefore the result is estimated.
J: The concentration is an estimated value.
U: The analyte was not detected at or above the reporting limit.
X: Matrix Interference has resulted in a raised reporting limit or distorted result.
W: Results reported on a wet-weight basis.
*: Value reported is outside QA limits

Analyte	Result	Units	Report Limit	Dilution Factor	Prep Batch	Prep Date/Time	Analysis Date/Time	Analyst
Dry Weight Determination (ASTM D 2974-87)								
Percent Moisture (Water Content)	**19**	%	0.1	1	MC090309	3/9/2009	3/10/2009	BMG
Trace Elements by ICP/MS (EPA 3050B/EPA 6020)								
Aluminum	**5700000**	µg/kg	1000	1	PT09C10D	3/10/2009	3/12/2009	MAP
Michigan 10 Elements by ICP/MS (EPA 3050B/EPA 6020)								
Arsenic	**9000**	µg/kg	100	1	PT09C10D	3/10/2009	3/12/2009	MAP
Barium	**100000**	µg/kg	1000	1	PT09C10D	3/10/2009	3/12/2009	MAP
Cadmium	**110**	µg/kg	50	1	PT09C10D	3/10/2009	3/12/2009	MAP
Chromium	**8000**	µg/kg	500	1	PT09C10D	3/10/2009	3/12/2009	MAP
Copper	**8700**	µg/kg	1000	1	PT09C10D	3/10/2009	3/12/2009	MAP
Lead	**11000**	µg/kg	1000	1	PT09C10D	3/10/2009	3/12/2009	MAP
Selenium	**280**	µg/kg	200	1	PT09C10D	3/10/2009	3/13/2009	MAP
Silver	**U**	µg/kg	100	1	PT09C10D	3/10/2009	3/12/2009	MAP
Zinc	**42000**	µg/kg	1000	1	PT09C10D	3/10/2009	3/12/2009	MAP
Mercury by CVAAS (EPA 7471A)								
Mercury	**U**	µg/kg	62	1	PM09C10B	3/10/2009	3/10/2009	ALM
Polynuclear Aromatic Hydrocarbons (PNAs) (EPA 3550B/EPA 8270C)								
Acenaphthene	**U**	µg/kg	410	1	PS09C11D	3/11/2009	3/12/2009	BDA
Acenaphthylene	**U**	µg/kg	410	1	PS09C11D	3/11/2009	3/12/2009	BDA
Anthracene	**U**	µg/kg	410	1	PS09C11D	3/11/2009	3/12/2009	BDA
Benzo(a)anthracene	**U**	µg/kg	410	1	PS09C11D	3/11/2009	3/12/2009	BDA
Benzo(a)pyrene	**U**	µg/kg	410	1	PS09C11D	3/11/2009	3/12/2009	BDA

Analytical Laboratory Report

Client Identification:	**Envirologic Technologies, Inc.**	Sample Matrix:	**Soil/Solid**
Fibertec Project Number:	**33098**	Sample Number:	**33098-010A**

Client Sample Information

Project Identification:	**Kzoo Co**	Client Sample Description:	**GSB-11@0.5'**
Project Number:	**080503**	Client Sample Number:	**10**
Sample Date:	**3/3/2009**	Chain of Custody Number:	**82430**

Comments: **All Results Reported On Dry Weight Basis. Percent Moisture = 19.2%.**

Definitions/ Qualifiers:

A: Spike recovery or precision unusable due to dilution.
B: The analyte was detected in the associated method blank.
E: The analyte was detected at a concentration greater than the calibration range, therefore the result is estimated.
J: The concentration is an estimated value.
U: The analyte was not detected at or above the reporting limit.
X: Matrix Interference has resulted in a raised reporting limit or distorted result.
W: Results reported on a wet-weight basis.
*: Value reported is outside QA limits

Analyte	Result	Units	Report Limit	Dilution Factor	Prep Batch	Prep Date/Time	Analysis Date/Time	Analyst
Polynuclear Aromatic Hydrocarbons (PNAs) (EPA 3550B/EPA 8270C)								
Benzo(b)fluoranthene	**U**	µg/kg	410	1	PS09C11D	3/11/2009	3/12/2009	BDA
Benzo(ghi)perylene	**U**	µg/kg	410	1	PS09C11D	3/11/2009	3/12/2009	BDA
Benzo(k)fluoranthene	**U**	µg/kg	410	1	PS09C11D	3/11/2009	3/12/2009	BDA
Chrysene	**U**	µg/kg	410	1	PS09C11D	3/11/2009	3/12/2009	BDA
Dibenzo(a,h)anthracene	**U**	µg/kg	410	1	PS09C11D	3/11/2009	3/12/2009	BDA
Fluoranthene	**U**	µg/kg	410	1	PS09C11D	3/11/2009	3/12/2009	BDA
Fluorene	**U**	µg/kg	410	1	PS09C11D	3/11/2009	3/12/2009	BDA
Indeno(1,2,3-cd)pyrene	**U**	µg/kg	410	1	PS09C11D	3/11/2009	3/12/2009	BDA
2-Methylnaphthalene	**U**	µg/kg	410	1	PS09C11D	3/11/2009	3/12/2009	BDA
Phenanthrene	**U**	µg/kg	410	1	PS09C11D	3/11/2009	3/12/2009	BDA
Pyrene	**U**	µg/kg	410	1	PS09C11D	3/11/2009	3/12/2009	BDA

Analytical Laboratory Report

Client Identification:	**Envirologic Technologies, Inc.**	Sample Matrix:	**Ground Water**
Fibertec Project Number:	**33098**	Sample Number:	**33098-011**

Client Sample Information

Project Identification:	**Kzoo Co**	Client Sample Description:	**GSB-3@7-11'**
Project Number:	**080503**	Client Sample Number:	**11**
Sample Date:	**3/3/2009**	Chain of Custody Number:	**82431**

Comments:

Definitions/ Qualifiers:

A: Spike recovery or precision unusable due to dilution.
B: The analyte was detected in the associated method blank.
E: The analyte was detected at a concentration greater than the calibration range, therefore the result is estimated.
J: The concentration is an estimated value.
U: The analyte was not detected at or above the reporting limit.
X: Matrix Interference has resulted in a raised reporting limit or distorted result.
W: Results reported on a wet-weight basis.
*: Value reported is outside QA limits

Analyte	Result	Units	Report Limit	Dilution Factor	Prep Batch	Prep Date/Time	Analysis Date/Time	Analyst
Plus List (VOCs) (EPA 5030B/EPA 8260B) (Estimated result for trans-1,4-dichloro-2-butene, compound failed low on CCV)								
Acetone	**U**	µg/L	50	1	VB09C10A	3/10/2009	3/10/2009	BAG
Acrylonitrile	**U**	µg/L	2.0	1	VB09C10A	3/10/2009	3/10/2009	BAG
Benzene	**U**	µg/L	1.0	1	VB09C10A	3/10/2009	3/10/2009	BAG
Bromobenzene	**U**	µg/L	1.0	1	VB09C10A	3/10/2009	3/10/2009	BAG
Bromochloromethane	**U**	µg/L	1.0	1	VB09C10A	3/10/2009	3/10/2009	BAG
Bromodichloromethane	**U**	µg/L	1.0	1	VB09C10A	3/10/2009	3/10/2009	BAG
Bromoform	**U**	µg/L	1.0	1	VB09C10A	3/10/2009	3/10/2009	BAG
Bromomethane	**U**	µg/L	5.0	1	VB09C10A	3/10/2009	3/10/2009	BAG
2-Butanone	**U**	µg/L	25	1	VB09C10A	3/10/2009	3/10/2009	BAG
n-Butylbenzene	**U**	µg/L	1.0	1	VB09C10A	3/10/2009	3/10/2009	BAG
sec-Butylbenzene	**U**	µg/L	1.0	1	VB09C10A	3/10/2009	3/10/2009	BAG
tert-Butylbenzene	**U**	µg/L	1.0	1	VB09C10A	3/10/2009	3/10/2009	BAG
Carbon Disulfide	**U**	µg/L	5.0	1	VB09C10A	3/10/2009	3/10/2009	BAG
Carbon Tetrachloride	**U**	µg/L	1.0	1	VB09C10A	3/10/2009	3/10/2009	BAG
Chlorobenzene	**U**	µg/L	1.0	1	VB09C10A	3/10/2009	3/10/2009	BAG
Chloroethane	**U**	µg/L	5.0	1	VB09C10A	3/10/2009	3/10/2009	BAG
Chloroform	**U**	µg/L	1.0	1	VB09C10A	3/10/2009	3/10/2009	BAG
Chloromethane	**U**	µg/L	5.0	1	VB09C10A	3/10/2009	3/10/2009	BAG
2-Chlorotoluene	**U**	µg/L	5.0	1	VB09C10A	3/10/2009	3/10/2009	BAG
Dibromochloromethane	**U**	µg/L	5.0	1	VB09C10A	3/10/2009	3/10/2009	BAG

Analytical Laboratory Report

Client Identification:	**Envirologic Technologies, Inc.**	Sample Matrix:	**Ground Water**
Fibertec Project Number:	**33098**	Sample Number:	**33098-011**

Client Sample Information

Project Identification:	**Kzoo Co**	Client Sample Description:	**GSB-3@7-11'**
Project Number:	**080503**	Client Sample Number:	**11**
Sample Date:	**3/3/2009**	Chain of Custody Number:	**82431**

Comments:

Definitions/ Qualifiers:

A: Spike recovery or precision unusable due to dilution.
B: The analyte was detected in the associated method blank.
E: The analyte was detected at a concentration greater than the calibration range, therefore the result is estimated.
J: The concentration is an estimated value.
U: The analyte was not detected at or above the reporting limit.
X: Matrix Interference has resulted in a raised reporting limit or distorted result.
W: Results reported on a wet-weight basis.
*: Value reported is outside QA limits

Analyte	Result	Units	Report Limit	Dilution Factor	Prep Batch	Prep Date/Time	Analysis Date/Time	Analyst
Plus List (VOCs) (EPA 5030B/EPA 8260B) (Estimated result for trans-1,4-dichloro-2-butene, compound failed low on CCV)								
1,2-Dibromo-3-chloropropane	**U**	µg/L	1.0	1	VB09C10A	3/10/2009	3/10/2009	BAG
Dibromomethane	**U**	µg/L	5.0	1	VB09C10A	3/10/2009	3/10/2009	BAG
1,2-Dichlorobenzene	**U**	µg/L	1.0	1	VB09C10A	3/10/2009	3/10/2009	BAG
1,3-Dichlorobenzene	**U**	µg/L	1.0	1	VB09C10A	3/10/2009	3/10/2009	BAG
1,4-Dichlorobenzene	**U**	µg/L	1.0	1	VB09C10A	3/10/2009	3/10/2009	BAG
trans-1,4-Dichloro-2-butene	**U**	µg/L	1.0	1	VB09C10A	3/10/2009	3/10/2009	BAG
Dichlorodifluoromethane	**U**	µg/L	5.0	1	VB09C10A	3/10/2009	3/10/2009	BAG
1,1-Dichloroethane	**U**	µg/L	1.0	1	VB09C10A	3/10/2009	3/10/2009	BAG
1,2-Dichloroethane	**U**	µg/L	1.0	1	VB09C10A	3/10/2009	3/10/2009	BAG
1,1-Dichloroethene	**U**	µg/L	1.0	1	VB09C10A	3/10/2009	3/10/2009	BAG
cis-1,2-Dichloroethene	**U**	µg/L	1.0	1	VB09C10A	3/10/2009	3/10/2009	BAG
trans-1,2-Dichloroethene	**U**	µg/L	1.0	1	VB09C10A	3/10/2009	3/10/2009	BAG
1,2-Dichloropropane	**U**	µg/L	1.0	1	VB09C10A	3/10/2009	3/10/2009	BAG
cis-1,3-Dichloropropene	**U**	µg/L	1.0	1	VB09C10A	3/10/2009	3/10/2009	BAG
trans-1,3-Dichloropropene	**U**	µg/L	1.0	1	VB09C10A	3/10/2009	3/10/2009	BAG
Diethyl Ether	**U**	µg/L	10	1	VB09C10A	3/10/2009	3/10/2009	BAG
Ethylbenzene	**U**	µg/L	1.0	1	VB09C10A	3/10/2009	3/10/2009	BAG
Ethylene Dibromide	**U**	µg/L	1.0	1	VB09C10A	3/10/2009	3/10/2009	BAG
Hexachloroethane	**U**	µg/L	2.0	1	VB09C10A	3/10/2009	3/10/2009	BAG
2-Hexanone	**U**	µg/L	50	1	VB09C10A	3/10/2009	3/10/2009	BAG

Analytical Laboratory Report

Client Identification:	**Envirologic Technologies, Inc.**	Sample Matrix:	**Ground Water**
Fibertec Project Number:	**33098**	Sample Number:	**33098-011**

Client Sample Information

Project Identification:	**Kzoo Co**	Client Sample Description:	**GSB-3@7-11'**
Project Number:	**080503**	Client Sample Number:	**11**
Sample Date:	**3/3/2009**	Chain of Custody Number:	**82431**

Comments:

Definitions/ Qualifiers:

A: Spike recovery or precision unusable due to dilution.
B: The analyte was detected in the associated method blank.
E: The analyte was detected at a concentration greater than the calibration range, therefore the result is estimated.
J: The concentration is an estimated value.
U: The analyte was not detected at or above the reporting limit.
X: Matrix Interference has resulted in a raised reporting limit or distorted result.
W: Results reported on a wet-weight basis.
*: Value reported is outside QA limits

Analyte	Result	Units	Report Limit	Dilution Factor	Prep Batch	Prep Date/Time	Analysis Date/Time	Analyst
Plus List (VOCs) (EPA 5030B/EPA 8260B) (Estimated result for trans-1,4-dichloro-2-butene, compound failed low on CCV)								
Isopropylbenzene	**U**	µg/L	5.0	1	VB09C10A	3/10/2009	3/10/2009	BAG
4-Methyl-2-pentanone	**U**	µg/L	50	1	VB09C10A	3/10/2009	3/10/2009	BAG
MTBE	**U**	µg/L	5.0	1	VB09C10A	3/10/2009	3/10/2009	BAG
Methyl Iodide	**U**	µg/L	1.0	1	VB09C10A	3/10/2009	3/10/2009	BAG
Methylene Chloride	**U**	µg/L	5.0	1	VB09C10A	3/10/2009	3/10/2009	BAG
Naphthalene	**U**	µg/L	5.0	1	VB09C10A	3/10/2009	3/10/2009	BAG
n-Propylbenzene	**U**	µg/L	1.0	1	VB09C10A	3/10/2009	3/10/2009	BAG
Styrene	**U**	µg/L	1.0	1	VB09C10A	3/10/2009	3/10/2009	BAG
1,1,1,2-Tetrachloroethane	**U**	µg/L	1.0	1	VB09C10A	3/10/2009	3/10/2009	BAG
1,1,2,2-Tetrachloroethane	**U**	µg/L	1.0	1	VB09C10A	3/10/2009	3/10/2009	BAG
Tetrachloroethene	**U**	µg/L	1.0	1	VB09C10A	3/10/2009	3/10/2009	BAG
Toluene	**U**	µg/L	1.0	1	VB09C10A	3/10/2009	3/10/2009	BAG
1,2,4-Trichlorobenzene	**U**	µg/L	5.0	1	VB09C10A	3/10/2009	3/10/2009	BAG
1,1,1-Trichloroethane	**U**	µg/L	1.0	1	VB09C10A	3/10/2009	3/10/2009	BAG
1,1,2-Trichloroethane	**U**	µg/L	1.0	1	VB09C10A	3/10/2009	3/10/2009	BAG
Trichloroethene	**U**	µg/L	1.0	1	VB09C10A	3/10/2009	3/10/2009	BAG
Trichlorofluoromethane	**U**	µg/L	1.0	1	VB09C10A	3/10/2009	3/10/2009	BAG
1,2,3-Trichloropropane	**U**	µg/L	1.0	1	VB09C10A	3/10/2009	3/10/2009	BAG
1,2,3-Trimethylbenzene	**U**	µg/L	1.0	1	VB09C10A	3/10/2009	3/10/2009	BAG
1,2,4-Trimethylbenzene	**U**	µg/L	1.0	1	VB09C10A	3/10/2009	3/10/2009	BAG

Analytical Laboratory Report

Client Identification:	**Envirologic Technologies, Inc.**	Sample Matrix:	**Ground Water**
Fibertec Project Number:	**33098**	Sample Number:	**33098-011**

Client Sample Information

Project Identification:	**Kzoo Co**	Client Sample Description:	**GSB-3@7-11'**
Project Number:	**080503**	Client Sample Number:	**11**
Sample Date:	**3/3/2009**	Chain of Custody Number:	**82431**

Comments:

Definitions/ Qualifiers:

A: Spike recovery or precision unusable due to dilution.
B: The analyte was detected in the associated method blank.
E: The analyte was detected at a concentration greater than the calibration range, therefore the result is estimated.
J: The concentration is an estimated value.
U: The analyte was not detected at or above the reporting limit.
X: Matrix Interference has resulted in a raised reporting limit or distorted result.
W: Results reported on a wet-weight basis.
*: Value reported is outside QA limits

Analyte	Result	Units	Report Limit	Dilution Factor	Prep Batch	Prep Date/Time	Analysis Date/Time	Analyst
Plus List (VOCs) (EPA 5030B/EPA 8260B) (Estimated result for trans-1,4-dichloro-2-butene, compound failed low on CCV)								
1,3,5-Trimethylbenzene	**U**	µg/L	1.0	1	VB09C10A	3/10/2009	3/10/2009	BAG
Vinyl Chloride	**2.3**	µg/L	1.0	1	VB09C10A	3/10/2009	3/10/2009	BAG
Xylenes	**U**	µg/L	3.0	1	VB09C10A	3/10/2009	3/10/2009	BAG

Analytical Laboratory Report

Client Identification:	**Envirologic Technologies, Inc.**	Sample Matrix:	**Ground Water**
Fibertec Project Number:	**33098**	Sample Number:	**33098-011A**

Client Sample Information

Project Identification:	**Kzoo Co**	Client Sample Description:	**GSB-3@7-11'**
Project Number:	**080503**	Client Sample Number:	**11**
Sample Date:	**3/3/2009**	Chain of Custody Number:	**82431**

Comments:

Definitions/ Qualifiers:

A: Spike recovery or precision unusable due to dilution.
B: The analyte was detected in the associated method blank.
E: The analyte was detected at a concentration greater than the calibration range, therefore the result is estimated.
J: The concentration is an estimated value.
U: The analyte was not detected at or above the reporting limit.
X: Matrix Interference has resulted in a raised reporting limit or distorted result.
W: Results reported on a wet-weight basis.
*: Value reported is outside QA limits

Analyte	Result	Units	Report Limit	Dilution Factor	Prep Batch	Prep Date/Time	Analysis Date/Time	Analyst
Trace Elements by ICP/MS, Dissolved (CODE FF/EPA 6020)								
Aluminum	**U**	µg/L	50	1	PT09C11E	3/3/2009	3/13/2009	JLH
Michigan 10 Elements by ICP/MS, Dissolved (CODE FF/EPA 6020)								
Arsenic	**U**	µg/L	5.0	1	PT09C11E	3/3/2009	3/13/2009	JLH
Barium	**150**	µg/L	100	1	PT09C11E	3/3/2009	3/13/2009	JLH
Cadmium	**U**	µg/L	1.0	1	PT09C11E	3/3/2009	3/13/2009	JLH
Chromium	**U**	µg/L	10	1	PT09C11E	3/3/2009	3/13/2009	JLH
Copper	**U**	µg/L	4.0	1	PT09C11E	3/3/2009	3/13/2009	JLH
Lead	**U**	µg/L	3.0	1	PT09C11E	3/3/2009	3/13/2009	JLH
Selenium	**U**	µg/L	5.0	1	PT09C11E	3/3/2009	3/13/2009	JLH
Silver	**U**	µg/L	0.20	1	PT09C11E	3/3/2009	3/13/2009	JLH
Zinc	**U**	µg/L	50	1	PT09C11E	3/3/2009	3/13/2009	JLH
Mercury by CVAAS, Dissolved (EPA 7470A)								
Mercury	**U**	µg/L	0.20	1	PM09C12A	3/12/2009	3/12/2009	ALM

Analytical Laboratory Report

Client Identification:	**Envirologic Technologies, Inc.**	Sample Matrix:	**Ground Water**
Fibertec Project Number:	**33098**	Sample Number:	**33098-011B**

Client Sample Information

Project Identification:	**Kzoo Co**	Client Sample Description:	**GSB-3@7-11'**
Project Number:	**080503**	Client Sample Number:	**11**
Sample Date:	**3/3/2009**	Chain of Custody Number:	**82431**

Comments:

Definitions/ Qualifiers:

A: Spike recovery or precision unusable due to dilution.
B: The analyte was detected in the associated method blank.
E: The analyte was detected at a concentration greater than the calibration range, therefore the result is estimated.
J: The concentration is an estimated value.
U: The analyte was not detected at or above the reporting limit.
X: Matrix Interference has resulted in a raised reporting limit or distorted result.
W: Results reported on a wet-weight basis.
*: Value reported is outside QA limits

Analyte	Result	Units	Report Limit	Dilution Factor	Prep Batch	Prep Date/Time	Analysis Date/Time	Analyst
Polynuclear Aromatic Hydrocarbons (PNAs) (EPA 3535/EPA 8270C)								
Acenaphthene	**U**	µg/L	5.0	1	PS09C10E	3/10/2009	3/11/2009	BDA
Acenaphthylene	**U**	µg/L	5.0	1	PS09C10E	3/10/2009	3/11/2009	BDA
Anthracene	**U**	µg/L	5.0	1	PS09C10E	3/10/2009	3/11/2009	BDA
Benzo(a)anthracene	**U**	µg/L	1.0	1	PS09C10E	3/10/2009	3/11/2009	BDA
Benzo(a)pyrene	**U**	µg/L	1.0	1	PS09C10E	3/10/2009	3/11/2009	BDA
Benzo(b)fluoranthene	**U**	µg/L	1.0	1	PS09C10E	3/10/2009	3/11/2009	BDA
Benzo(ghi)perylene	**U**	µg/L	1.0	1	PS09C10E	3/10/2009	3/11/2009	BDA
Benzo(k)fluoranthene	**U**	µg/L	1.0	1	PS09C10E	3/10/2009	3/11/2009	BDA
Chrysene	**U**	µg/L	1.0	1	PS09C10E	3/10/2009	3/11/2009	BDA
Dibenzo(a,h)anthracene	**U**	µg/L	2.0	1	PS09C10E	3/10/2009	3/11/2009	BDA
Fluoranthene	**U**	µg/L	1.0	1	PS09C10E	3/10/2009	3/11/2009	BDA
Fluorene	**U**	µg/L	5.0	1	PS09C10E	3/10/2009	3/11/2009	BDA
Indeno(1,2,3-cd)pyrene	**U**	µg/L	2.0	1	PS09C10E	3/10/2009	3/11/2009	BDA
2-Methylnaphthalene	**U**	µg/L	5.0	1	PS09C10E	3/10/2009	3/11/2009	BDA
Phenanthrene	**U**	µg/L	2.0	1	PS09C10E	3/10/2009	3/11/2009	BDA
Pyrene	**U**	µg/L	5.0	1	PS09C10E	3/10/2009	3/11/2009	BDA

Analytical Laboratory Report

Client Identification:	**Envirologic Technologies, Inc.**	Sample Matrix:	**Ground Water**
Fibertec Project Number:	**33098**	Sample Number:	**33098-012**

Client Sample Information

Project Identification:	**Kzoo Co**	Client Sample Description:	**GSB-7@3-7'**
Project Number:	**080503**	Client Sample Number:	**12**
Sample Date:	**3/3/2009**	Chain of Custody Number:	**82431**

Comments:

Definitions/ Qualifiers:

A: Spike recovery or precision unusable due to dilution.
B: The analyte was detected in the associated method blank.
E: The analyte was detected at a concentration greater than the calibration range, therefore the result is estimated.
J: The concentration is an estimated value.
U: The analyte was not detected at or above the reporting limit.
X: Matrix Interference has resulted in a raised reporting limit or distorted result.
W: Results reported on a wet-weight basis.
*: Value reported is outside QA limits

Analyte	Result	Units	Report Limit	Dilution Factor	Prep Batch	Prep Date/Time	Analysis Date/Time	Analyst
Plus List (VOCs) (EPA 5030B/EPA 8260B) (Estimated result for trans-1,4-dichloro-2-butene, compound failed low on CCV)								
Acetone	**U**	µg/L	50	1	VB09C10A	3/10/2009	3/10/2009	BAG
Acrylonitrile	**U**	µg/L	2.0	1	VB09C10A	3/10/2009	3/10/2009	BAG
Benzene	**U**	µg/L	1.0	1	VB09C10A	3/10/2009	3/10/2009	BAG
Bromobenzene	**U**	µg/L	1.0	1	VB09C10A	3/10/2009	3/10/2009	BAG
Bromochloromethane	**U**	µg/L	1.0	1	VB09C10A	3/10/2009	3/10/2009	BAG
Bromodichloromethane	**U**	µg/L	1.0	1	VB09C10A	3/10/2009	3/10/2009	BAG
Bromoform	**U**	µg/L	1.0	1	VB09C10A	3/10/2009	3/10/2009	BAG
Bromomethane	**U**	µg/L	5.0	1	VB09C10A	3/10/2009	3/10/2009	BAG
2-Butanone	**U**	µg/L	25	1	VB09C10A	3/10/2009	3/10/2009	BAG
n-Butylbenzene	**U**	µg/L	1.0	1	VB09C10A	3/10/2009	3/10/2009	BAG
sec-Butylbenzene	**U**	µg/L	1.0	1	VB09C10A	3/10/2009	3/10/2009	BAG
tert-Butylbenzene	**U**	µg/L	1.0	1	VB09C10A	3/10/2009	3/10/2009	BAG
Carbon Disulfide	**U**	µg/L	5.0	1	VB09C10A	3/10/2009	3/10/2009	BAG
Carbon Tetrachloride	**U**	µg/L	1.0	1	VB09C10A	3/10/2009	3/10/2009	BAG
Chlorobenzene	**U**	µg/L	1.0	1	VB09C10A	3/10/2009	3/10/2009	BAG
Chloroethane	**U**	µg/L	5.0	1	VB09C10A	3/10/2009	3/10/2009	BAG
Chloroform	**U**	µg/L	1.0	1	VB09C10A	3/10/2009	3/10/2009	BAG
Chloromethane	**U**	µg/L	5.0	1	VB09C10A	3/10/2009	3/10/2009	BAG
2-Chlorotoluene	**U**	µg/L	5.0	1	VB09C10A	3/10/2009	3/10/2009	BAG
Dibromochloromethane	**U**	µg/L	5.0	1	VB09C10A	3/10/2009	3/10/2009	BAG

Analytical Laboratory Report

Client Identification:	**Envirologic Technologies, Inc.**	Sample Matrix:	**Ground Water**
Fibertec Project Number:	**33098**	Sample Number:	**33098-012**

Client Sample Information

Project Identification:	**Kzoo Co**	Client Sample Description:	**GSB-7@3-7'**
Project Number:	**080503**	Client Sample Number:	**12**
Sample Date:	**3/3/2009**	Chain of Custody Number:	**82431**

Comments:

Definitions/ Qualifiers:

A: Spike recovery or precision unusable due to dilution.
B: The analyte was detected in the associated method blank.
E: The analyte was detected at a concentration greater than the calibration range, therefore the result is estimated.
J: The concentration is an estimated value.
U: The analyte was not detected at or above the reporting limit.
X: Matrix Interference has resulted in a raised reporting limit or distorted result.
W: Results reported on a wet-weight basis.
*: Value reported is outside QA limits

Analyte	Result	Units	Report Limit	Dilution Factor	Prep Batch	Prep Date/Time	Analysis Date/Time	Analyst
Plus List (VOCs) (EPA 5030B/EPA 8260B) (Estimated result for trans-1,4-dichloro-2-butene, compound failed low on CCV)								
1,2-Dibromo-3-chloropropane	**U**	µg/L	1.0	1	VB09C10A	3/10/2009	3/10/2009	BAG
Dibromomethane	**U**	µg/L	5.0	1	VB09C10A	3/10/2009	3/10/2009	BAG
1,2-Dichlorobenzene	**U**	µg/L	1.0	1	VB09C10A	3/10/2009	3/10/2009	BAG
1,3-Dichlorobenzene	**U**	µg/L	1.0	1	VB09C10A	3/10/2009	3/10/2009	BAG
1,4-Dichlorobenzene	**U**	µg/L	1.0	1	VB09C10A	3/10/2009	3/10/2009	BAG
trans-1,4-Dichloro-2-butene	**U**	µg/L	1.0	1	VB09C10A	3/10/2009	3/10/2009	BAG
Dichlorodifluoromethane	**U**	µg/L	5.0	1	VB09C10A	3/10/2009	3/10/2009	BAG
1,1-Dichloroethane	**U**	µg/L	1.0	1	VB09C10A	3/10/2009	3/10/2009	BAG
1,2-Dichloroethane	**U**	µg/L	1.0	1	VB09C10A	3/10/2009	3/10/2009	BAG
1,1-Dichloroethene	**U**	µg/L	1.0	1	VB09C10A	3/10/2009	3/10/2009	BAG
cis-1,2-Dichloroethene	**12**	µg/L	1.0	1	VB09C10A	3/10/2009	3/10/2009	BAG
trans-1,2-Dichloroethene	**U**	µg/L	1.0	1	VB09C10A	3/10/2009	3/10/2009	BAG
1,2-Dichloropropane	**U**	µg/L	1.0	1	VB09C10A	3/10/2009	3/10/2009	BAG
cis-1,3-Dichloropropene	**U**	µg/L	1.0	1	VB09C10A	3/10/2009	3/10/2009	BAG
trans-1,3-Dichloropropene	**U**	µg/L	1.0	1	VB09C10A	3/10/2009	3/10/2009	BAG
Diethyl Ether	**U**	µg/L	10	1	VB09C10A	3/10/2009	3/10/2009	BAG
Ethylbenzene	**U**	µg/L	1.0	1	VB09C10A	3/10/2009	3/10/2009	BAG
Ethylene Dibromide	**U**	µg/L	1.0	1	VB09C10A	3/10/2009	3/10/2009	BAG
Hexachloroethane	**U**	µg/L	2.0	1	VB09C10A	3/10/2009	3/10/2009	BAG
2-Hexanone	**U**	µg/L	50	1	VB09C10A	3/10/2009	3/10/2009	BAG

Analytical Laboratory Report

Client Identification:	**Envirologic Technologies, Inc.**	Sample Matrix:	**Ground Water**
Fibertec Project Number:	**33098**	Sample Number:	**33098-012**

Client Sample Information

Project Identification:	**Kzoo Co**	Client Sample Description:	**GSB-7@3-7'**
Project Number:	**080503**	Client Sample Number:	**12**
Sample Date:	**3/3/2009**	Chain of Custody Number:	**82431**

Comments:

Definitions/ Qualifiers:

A: Spike recovery or precision unusable due to dilution.
B: The analyte was detected in the associated method blank.
E: The analyte was detected at a concentration greater than the calibration range, therefore the result is estimated.
J: The concentration is an estimated value.
U: The analyte was not detected at or above the reporting limit.
X: Matrix Interference has resulted in a raised reporting limit or distorted result.
W: Results reported on a wet-weight basis.
*: Value reported is outside QA limits

Analyte	Result	Units	Report Limit	Dilution Factor	Prep Batch	Prep Date/Time	Analysis Date/Time	Analyst
Plus List (VOCs) (EPA 5030B/EPA 8260B) (Estimated result for trans-1,4-dichloro-2-butene, compound failed low on CCV)								
Isopropylbenzene	**U**	µg/L	5.0	1	VB09C10A	3/10/2009	3/10/2009	BAG
4-Methyl-2-pentanone	**U**	µg/L	50	1	VB09C10A	3/10/2009	3/10/2009	BAG
MTBE	**U**	µg/L	5.0	1	VB09C10A	3/10/2009	3/10/2009	BAG
Methyl Iodide	**U**	µg/L	1.0	1	VB09C10A	3/10/2009	3/10/2009	BAG
Methylene Chloride	**U**	µg/L	5.0	1	VB09C10A	3/10/2009	3/10/2009	BAG
Naphthalene	**U**	µg/L	5.0	1	VB09C10A	3/10/2009	3/10/2009	BAG
n-Propylbenzene	**U**	µg/L	1.0	1	VB09C10A	3/10/2009	3/10/2009	BAG
Styrene	**U**	µg/L	1.0	1	VB09C10A	3/10/2009	3/10/2009	BAG
1,1,1,2-Tetrachloroethane	**U**	µg/L	1.0	1	VB09C10A	3/10/2009	3/10/2009	BAG
1,1,2,2-Tetrachloroethane	**U**	µg/L	1.0	1	VB09C10A	3/10/2009	3/10/2009	BAG
Tetrachloroethene	**U**	µg/L	1.0	1	VB09C10A	3/10/2009	3/10/2009	BAG
Toluene	**U**	µg/L	1.0	1	VB09C10A	3/10/2009	3/10/2009	BAG
1,2,4-Trichlorobenzene	**U**	µg/L	5.0	1	VB09C10A	3/10/2009	3/10/2009	BAG
1,1,1-Trichloroethane	**U**	µg/L	1.0	1	VB09C10A	3/10/2009	3/10/2009	BAG
1,1,2-Trichloroethane	**U**	µg/L	1.0	1	VB09C10A	3/10/2009	3/10/2009	BAG
Trichloroethene	**U**	µg/L	1.0	1	VB09C10A	3/10/2009	3/10/2009	BAG
Trichlorofluoromethane	**U**	µg/L	1.0	1	VB09C10A	3/10/2009	3/10/2009	BAG
1,2,3-Trichloropropane	**U**	µg/L	1.0	1	VB09C10A	3/10/2009	3/10/2009	BAG
1,2,3-Trimethylbenzene	**U**	µg/L	1.0	1	VB09C10A	3/10/2009	3/10/2009	BAG
1,2,4-Trimethylbenzene	**U**	µg/L	1.0	1	VB09C10A	3/10/2009	3/10/2009	BAG

Analytical Laboratory Report

Client Identification:	**Envirologic Technologies, Inc.**	Sample Matrix:	**Ground Water**
Fibertec Project Number:	**33098**	Sample Number:	**33098-012**

Client Sample Information

Project Identification:	**Kzoo Co**	Client Sample Description:	**GSB-7@3-7'**
Project Number:	**080503**	Client Sample Number:	**12**
Sample Date:	**3/3/2009**	Chain of Custody Number:	**82431**

Comments:

Definitions/ Qualifiers:

A: Spike recovery or precision unusable due to dilution.
B: The analyte was detected in the associated method blank.
E: The analyte was detected at a concentration greater than the calibration range, therefore the result is estimated.
J: The concentration is an estimated value.
U: The analyte was not detected at or above the reporting limit.
X: Matrix Interference has resulted in a raised reporting limit or distorted result.
W: Results reported on a wet-weight basis.
*: Value reported is outside QA limits

Analyte	Result	Units	Report Limit	Dilution Factor	Prep Batch	Prep Date/Time	Analysis Date/Time	Analyst
Plus List (VOCs) (EPA 5030B/EPA 8260B) (Estimated result for trans-1,4-dichloro-2-butene, compound failed low on CCV)								
1,3,5-Trimethylbenzene	**U**	µg/L	1.0	1	VB09C10A	3/10/2009	3/10/2009	BAG
Vinyl Chloride	**2.8**	µg/L	1.0	1	VB09C10A	3/10/2009	3/10/2009	BAG
Xylenes	**U**	µg/L	3.0	1	VB09C10A	3/10/2009	3/10/2009	BAG

Analytical Laboratory Report

Client Identification:	**Envirologic Technologies, Inc.**	Sample Matrix:	**Ground Water**
Fibertec Project Number:	**33098**	Sample Number:	**33098-012A**

Client Sample Information

Project Identification:	**Kzoo Co**	Client Sample Description:	**GSB-7@3-7'**
Project Number:	**080503**	Client Sample Number:	**12**
Sample Date:	**3/3/2009**	Chain of Custody Number:	**82431**

Comments:

Definitions/ Qualifiers:

A: Spike recovery or precision unusable due to dilution.
B: The analyte was detected in the associated method blank.
E: The analyte was detected at a concentration greater than the calibration range, therefore the result is estimated.
J: The concentration is an estimated value.
U: The analyte was not detected at or above the reporting limit.
X: Matrix Interference has resulted in a raised reporting limit or distorted result.
W: Results reported on a wet-weight basis.
*: Value reported is outside QA limits

Analyte	Result	Units	Report Limit	Dilution Factor	Prep Batch	Prep Date/Time	Analysis Date/Time	Analyst
Trace Elements by ICP/MS, Dissolved (CODE FF/EPA 6020)								
Aluminum	**U**	µg/L	50	1	PT09C11E	3/3/2009	3/13/2009	JLH
Michigan 10 Elements by ICP/MS, Dissolved (CODE FF/EPA 6020)								
Arsenic	**27**	µg/L	5.0	1	PT09C11E	3/3/2009	3/13/2009	JLH
Barium	**220**	µg/L	100	1	PT09C11E	3/3/2009	3/13/2009	JLH
Cadmium	**U**	µg/L	1.0	1	PT09C11E	3/3/2009	3/13/2009	JLH
Chromium	**U**	µg/L	10	1	PT09C11E	3/3/2009	3/13/2009	JLH
Copper	**U**	µg/L	4.0	1	PT09C11E	3/3/2009	3/13/2009	JLH
Lead	**U**	µg/L	3.0	1	PT09C11E	3/3/2009	3/13/2009	JLH
Selenium	**U**	µg/L	5.0	1	PT09C11E	3/3/2009	3/13/2009	JLH
Silver	**U**	µg/L	0.20	1	PT09C11E	3/3/2009	3/13/2009	JLH
Zinc	**U**	µg/L	50	1	PT09C11E	3/3/2009	3/13/2009	JLH
Mercury by CVAAS, Dissolved (EPA 7470A)								
Mercury	**U**	µg/L	0.20	1	PM09C12A	3/12/2009	3/12/2009	ALM

Analytical Laboratory Report

Client Identification:	**Envirologic Technologies, Inc.**	Sample Matrix:	**Ground Water**
Fibertec Project Number:	**33098**	Sample Number:	**33098-012B**

Client Sample Information

Project Identification:	**Kzoo Co**	Client Sample Description:	**GSB-7@3-7'**
Project Number:	**080503**	Client Sample Number:	**12**
Sample Date:	**3/3/2009**	Chain of Custody Number:	**82431**

Comments:

Definitions/ Qualifiers:

A: Spike recovery or precision unusable due to dilution.
B: The analyte was detected in the associated method blank.
E: The analyte was detected at a concentration greater than the calibration range, therefore the result is estimated.
J: The concentration is an estimated value.
U: The analyte was not detected at or above the reporting limit.
X: Matrix Interference has resulted in a raised reporting limit or distorted result.
W: Results reported on a wet-weight basis.
*: Value reported is outside QA limits

Analyte	Result	Units	Report Limit	Dilution Factor	Prep Batch	Prep Date/Time	Analysis Date/Time	Analyst
Polynuclear Aromatic Hydrocarbons (PNAs) (EPA 3535/EPA 8270C)								
Acenaphthene	**U**	µg/L	5.0	1	PS09C10E	3/10/2009	3/11/2009	BDA
Acenaphthylene	**U**	µg/L	5.0	1	PS09C10E	3/10/2009	3/11/2009	BDA
Anthracene	**U**	µg/L	5.0	1	PS09C10E	3/10/2009	3/11/2009	BDA
Benzo(a)anthracene	**U**	µg/L	1.0	1	PS09C10E	3/10/2009	3/11/2009	BDA
Benzo(a)pyrene	**U**	µg/L	1.0	1	PS09C10E	3/10/2009	3/11/2009	BDA
Benzo(b)fluoranthene	**U**	µg/L	1.0	1	PS09C10E	3/10/2009	3/11/2009	BDA
Benzo(ghi)perylene	**U**	µg/L	1.0	1	PS09C10E	3/10/2009	3/11/2009	BDA
Benzo(k)fluoranthene	**U**	µg/L	1.0	1	PS09C10E	3/10/2009	3/11/2009	BDA
Chrysene	**U**	µg/L	1.0	1	PS09C10E	3/10/2009	3/11/2009	BDA
Dibenzo(a,h)anthracene	**U**	µg/L	2.0	1	PS09C10E	3/10/2009	3/11/2009	BDA
Fluoranthene	**U**	µg/L	1.0	1	PS09C10E	3/10/2009	3/11/2009	BDA
Fluorene	**U**	µg/L	5.0	1	PS09C10E	3/10/2009	3/11/2009	BDA
Indeno(1,2,3-cd)pyrene	**U**	µg/L	2.0	1	PS09C10E	3/10/2009	3/11/2009	BDA
2-Methylnaphthalene	**U**	µg/L	5.0	1	PS09C10E	3/10/2009	3/11/2009	BDA
Phenanthrene	**U**	µg/L	2.0	1	PS09C10E	3/10/2009	3/11/2009	BDA
Pyrene	**U**	µg/L	5.0	1	PS09C10E	3/10/2009	3/11/2009	BDA

Analytical Laboratory Report

Client Identification:	**Envirologic Technologies, Inc.**	Sample Matrix:	**Ground Water**
Fibertec Project Number:	**33098**	Sample Number:	**33098-013**

Client Sample Information

Project Identification:	**Kzoo Co**	Client Sample Description:	**GSB-10@6-10'**
Project Number:	**080503**	Client Sample Number:	**13**
Sample Date:	**3/3/2009**	Chain of Custody Number:	**82431**

Comments:

Definitions/ Qualifiers:

A: Spike recovery or precision unusable due to dilution.
B: The analyte was detected in the associated method blank.
E: The analyte was detected at a concentration greater than the calibration range, therefore the result is estimated.
J: The concentration is an estimated value.
U: The analyte was not detected at or above the reporting limit.
X: Matrix Interference has resulted in a raised reporting limit or distorted result.
W: Results reported on a wet-weight basis.
*: Value reported is outside QA limits

Analyte	Result	Units	Report Limit	Dilution Factor	Prep Batch	Prep Date/Time	Analysis Date/Time	Analyst
Plus List (VOCs) (EPA 5030B/EPA 8260B) (Estimated result for trans-1,4-dichloro-2-butene, compound failed low on CCV)								
Acetone	**U**	µg/L	50	1	VB09C10A	3/10/2009	3/10/2009	BAG
Acrylonitrile	**U**	µg/L	2.0	1	VB09C10A	3/10/2009	3/10/2009	BAG
Benzene	**U**	µg/L	1.0	1	VB09C10A	3/10/2009	3/10/2009	BAG
Bromobenzene	**U**	µg/L	1.0	1	VB09C10A	3/10/2009	3/10/2009	BAG
Bromochloromethane	**U**	µg/L	1.0	1	VB09C10A	3/10/2009	3/10/2009	BAG
Bromodichloromethane	**U**	µg/L	1.0	1	VB09C10A	3/10/2009	3/10/2009	BAG
Bromoform	**U**	µg/L	1.0	1	VB09C10A	3/10/2009	3/10/2009	BAG
Bromomethane	**U**	µg/L	5.0	1	VB09C10A	3/10/2009	3/10/2009	BAG
2-Butanone	**U**	µg/L	25	1	VB09C10A	3/10/2009	3/10/2009	BAG
n-Butylbenzene	**U**	µg/L	1.0	1	VB09C10A	3/10/2009	3/10/2009	BAG
sec-Butylbenzene	**U**	µg/L	1.0	1	VB09C10A	3/10/2009	3/10/2009	BAG
tert-Butylbenzene	**U**	µg/L	1.0	1	VB09C10A	3/10/2009	3/10/2009	BAG
Carbon Disulfide	**U**	µg/L	5.0	1	VB09C10A	3/10/2009	3/10/2009	BAG
Carbon Tetrachloride	**U**	µg/L	1.0	1	VB09C10A	3/10/2009	3/10/2009	BAG
Chlorobenzene	**U**	µg/L	1.0	1	VB09C10A	3/10/2009	3/10/2009	BAG
Chloroethane	**U**	µg/L	5.0	1	VB09C10A	3/10/2009	3/10/2009	BAG
Chloroform	**U**	µg/L	1.0	1	VB09C10A	3/10/2009	3/10/2009	BAG
Chloromethane	**U**	µg/L	5.0	1	VB09C10A	3/10/2009	3/10/2009	BAG
2-Chlorotoluene	**U**	µg/L	5.0	1	VB09C10A	3/10/2009	3/10/2009	BAG
Dibromochloromethane	**U**	µg/L	5.0	1	VB09C10A	3/10/2009	3/10/2009	BAG

Analytical Laboratory Report

Client Identification:	**Envirologic Technologies, Inc.**	Sample Matrix:	**Ground Water**
Fibertec Project Number:	**33098**	Sample Number:	**33098-013**

Client Sample Information

Project Identification:	**Kzoo Co**	Client Sample Description:	**GSB-10@6-10'**
Project Number:	**080503**	Client Sample Number:	**13**
Sample Date:	**3/3/2009**	Chain of Custody Number:	**82431**

Comments:

Definitions/ Qualifiers:

A: Spike recovery or precision unusable due to dilution.
B: The analyte was detected in the associated method blank.
E: The analyte was detected at a concentration greater than the calibration range, therefore the result is estimated.
J: The concentration is an estimated value.
U: The analyte was not detected at or above the reporting limit.
X: Matrix Interference has resulted in a raised reporting limit or distorted result.
W: Results reported on a wet-weight basis.
*: Value reported is outside QA limits

Analyte	Result	Units	Report Limit	Dilution Factor	Prep Batch	Prep Date/Time	Analysis Date/Time	Analyst
Plus List (VOCs) (EPA 5030B/EPA 8260B) (Estimated result for trans-1,4-dichloro-2-butene, compound failed low on CCV)								
1,2-Dibromo-3-chloropropane	**U**	µg/L	1.0	1	VB09C10A	3/10/2009	3/10/2009	BAG
Dibromomethane	**U**	µg/L	5.0	1	VB09C10A	3/10/2009	3/10/2009	BAG
1,2-Dichlorobenzene	**U**	µg/L	1.0	1	VB09C10A	3/10/2009	3/10/2009	BAG
1,3-Dichlorobenzene	**U**	µg/L	1.0	1	VB09C10A	3/10/2009	3/10/2009	BAG
1,4-Dichlorobenzene	**U**	µg/L	1.0	1	VB09C10A	3/10/2009	3/10/2009	BAG
trans-1,4-Dichloro-2-butene	**U**	µg/L	1.0	1	VB09C10A	3/10/2009	3/10/2009	BAG
Dichlorodifluoromethane	**U**	µg/L	5.0	1	VB09C10A	3/10/2009	3/10/2009	BAG
1,1-Dichloroethane	**U**	µg/L	1.0	1	VB09C10A	3/10/2009	3/10/2009	BAG
1,2-Dichloroethane	**U**	µg/L	1.0	1	VB09C10A	3/10/2009	3/10/2009	BAG
1,1-Dichloroethene	**U**	µg/L	1.0	1	VB09C10A	3/10/2009	3/10/2009	BAG
cis-1,2-Dichloroethene	**U**	µg/L	1.0	1	VB09C10A	3/10/2009	3/10/2009	BAG
trans-1,2-Dichloroethene	**U**	µg/L	1.0	1	VB09C10A	3/10/2009	3/10/2009	BAG
1,2-Dichloropropane	**U**	µg/L	1.0	1	VB09C10A	3/10/2009	3/10/2009	BAG
cis-1,3-Dichloropropene	**U**	µg/L	1.0	1	VB09C10A	3/10/2009	3/10/2009	BAG
trans-1,3-Dichloropropene	**U**	µg/L	1.0	1	VB09C10A	3/10/2009	3/10/2009	BAG
Diethyl Ether	**U**	µg/L	10	1	VB09C10A	3/10/2009	3/10/2009	BAG
Ethylbenzene	**U**	µg/L	1.0	1	VB09C10A	3/10/2009	3/10/2009	BAG
Ethylene Dibromide	**U**	µg/L	1.0	1	VB09C10A	3/10/2009	3/10/2009	BAG
Hexachloroethane	**U**	µg/L	2.0	1	VB09C10A	3/10/2009	3/10/2009	BAG
2-Hexanone	**U**	µg/L	50	1	VB09C10A	3/10/2009	3/10/2009	BAG

Analytical Laboratory Report

Client Identification:	**Envirologic Technologies, Inc.**	Sample Matrix:	**Ground Water**
Fibertec Project Number:	**33098**	Sample Number:	**33098-013**

Client Sample Information

Project Identification:	**Kzoo Co**	Client Sample Description:	**GSB-10@6-10'**
Project Number:	**080503**	Client Sample Number:	**13**
Sample Date:	**3/3/2009**	Chain of Custody Number:	**82431**

Comments:

Definitions/ Qualifiers:

A: Spike recovery or precision unusable due to dilution.
B: The analyte was detected in the associated method blank.
E: The analyte was detected at a concentration greater than the calibration range, therefore the result is estimated.
J: The concentration is an estimated value.
U: The analyte was not detected at or above the reporting limit.
X: Matrix Interference has resulted in a raised reporting limit or distorted result.
W: Results reported on a wet-weight basis.
*: Value reported is outside QA limits

Analyte	Result	Units	Report Limit	Dilution Factor	Prep Batch	Prep Date/Time	Analysis Date/Time	Analyst
Plus List (VOCs) (EPA 5030B/EPA 8260B) (Estimated result for trans-1,4-dichloro-2-butene, compound failed low on CCV)								
Isopropylbenzene	**U**	µg/L	5.0	1	VB09C10A	3/10/2009	3/10/2009	BAG
4-Methyl-2-pentanone	**U**	µg/L	50	1	VB09C10A	3/10/2009	3/10/2009	BAG
MTBE	**U**	µg/L	5.0	1	VB09C10A	3/10/2009	3/10/2009	BAG
Methyl Iodide	**U**	µg/L	1.0	1	VB09C10A	3/10/2009	3/10/2009	BAG
Methylene Chloride	**U**	µg/L	5.0	1	VB09C10A	3/10/2009	3/10/2009	BAG
Naphthalene	**U**	µg/L	5.0	1	VB09C10A	3/10/2009	3/10/2009	BAG
n-Propylbenzene	**U**	µg/L	1.0	1	VB09C10A	3/10/2009	3/10/2009	BAG
Styrene	**U**	µg/L	1.0	1	VB09C10A	3/10/2009	3/10/2009	BAG
1,1,1,2-Tetrachloroethane	**U**	µg/L	1.0	1	VB09C10A	3/10/2009	3/10/2009	BAG
1,1,2,2-Tetrachloroethane	**U**	µg/L	1.0	1	VB09C10A	3/10/2009	3/10/2009	BAG
Tetrachloroethene	**1.7**	µg/L	1.0	1	VB09C10A	3/10/2009	3/10/2009	BAG
Toluene	**U**	µg/L	1.0	1	VB09C10A	3/10/2009	3/10/2009	BAG
1,2,4-Trichlorobenzene	**U**	µg/L	5.0	1	VB09C10A	3/10/2009	3/10/2009	BAG
1,1,1-Trichloroethane	**U**	µg/L	1.0	1	VB09C10A	3/10/2009	3/10/2009	BAG
1,1,2-Trichloroethane	**U**	µg/L	1.0	1	VB09C10A	3/10/2009	3/10/2009	BAG
Trichloroethene	**U**	µg/L	1.0	1	VB09C10A	3/10/2009	3/10/2009	BAG
Trichlorofluoromethane	**U**	µg/L	1.0	1	VB09C10A	3/10/2009	3/10/2009	BAG
1,2,3-Trichloropropane	**U**	µg/L	1.0	1	VB09C10A	3/10/2009	3/10/2009	BAG
1,2,3-Trimethylbenzene	**U**	µg/L	1.0	1	VB09C10A	3/10/2009	3/10/2009	BAG
1,2,4-Trimethylbenzene	**U**	µg/L	1.0	1	VB09C10A	3/10/2009	3/10/2009	BAG

Analytical Laboratory Report

Client Identification:	**Envirologic Technologies, Inc.**	Sample Matrix:	**Ground Water**
Fibertec Project Number:	**33098**	Sample Number:	**33098-013**

Client Sample Information

Project Identification:	**Kzoo Co**	Client Sample Description:	**GSB-10@6-10'**
Project Number:	**080503**	Client Sample Number:	**13**
Sample Date:	**3/3/2009**	Chain of Custody Number:	**82431**

Comments:

Definitions/ Qualifiers:

A: Spike recovery or precision unusable due to dilution.
B: The analyte was detected in the associated method blank.
E: The analyte was detected at a concentration greater than the calibration range, therefore the result is estimated.
J: The concentration is an estimated value.
U: The analyte was not detected at or above the reporting limit.
X: Matrix Interference has resulted in a raised reporting limit or distorted result.
W: Results reported on a wet-weight basis.
*: Value reported is outside QA limits

Analyte	Result	Units	Report Limit	Dilution Factor	Prep Batch	Prep Date/Time	Analysis Date/Time	Analyst
Plus List (VOCs) (EPA 5030B/EPA 8260B) (Estimated result for trans-1,4-dichloro-2-butene, compound failed low on CCV)								
1,3,5-Trimethylbenzene	**U**	µg/L	1.0	1	VB09C10A	3/10/2009	3/10/2009	BAG
Vinyl Chloride	**U**	µg/L	1.0	1	VB09C10A	3/10/2009	3/10/2009	BAG
Xylenes	**U**	µg/L	3.0	1	VB09C10A	3/10/2009	3/10/2009	BAG

Analytical Laboratory Report

Client Identification:	**Envirologic Technologies, Inc.**	Sample Matrix:	**Ground Water**
Fibertec Project Number:	**33098**	Sample Number:	**33098-013A**

Client Sample Information

Project Identification:	**Kzoo Co**	Client Sample Description:	**GSB-10@6-10'**
Project Number:	**080503**	Client Sample Number:	**13**
Sample Date:	**3/3/2009**	Chain of Custody Number:	**82431**

Comments:

Definitions/ Qualifiers:

A: Spike recovery or precision unusable due to dilution.
B: The analyte was detected in the associated method blank.
E: The analyte was detected at a concentration greater than the calibration range, therefore the result is estimated.
J: The concentration is an estimated value.
U: The analyte was not detected at or above the reporting limit.
X: Matrix Interference has resulted in a raised reporting limit or distorted result.
W: Results reported on a wet-weight basis.
*: Value reported is outside QA limits

Analyte	Result	Units	Report Limit	Dilution Factor	Prep Batch	Prep Date/Time	Analysis Date/Time	Analyst
Trace Elements by ICP/MS, Dissolved (CODE FF/EPA 6020)								
Aluminum	**U**	µg/L	50	1	PT09C11E	3/3/2009	3/13/2009	JLH
Michigan 10 Elements by ICP/MS, Dissolved (CODE FF/EPA 6020)								
Arsenic	**U**	µg/L	5.0	1	PT09C11E	3/3/2009	3/13/2009	JLH
Barium	**U**	µg/L	100	1	PT09C11E	3/3/2009	3/13/2009	JLH
Cadmium	**U**	µg/L	1.0	1	PT09C11E	3/3/2009	3/13/2009	JLH
Chromium	**U**	µg/L	10	1	PT09C11E	3/3/2009	3/13/2009	JLH
Copper	**U**	µg/L	4.0	1	PT09C11E	3/3/2009	3/13/2009	JLH
Lead	**U**	µg/L	3.0	1	PT09C11E	3/3/2009	3/13/2009	JLH
Selenium	**U**	µg/L	5.0	1	PT09C11E	3/3/2009	3/13/2009	JLH
Silver	**U**	µg/L	0.20	1	PT09C11E	3/3/2009	3/13/2009	JLH
Zinc	**U**	µg/L	50	1	PT09C11E	3/3/2009	3/13/2009	JLH
Mercury by CVAAS, Dissolved (EPA 7470A)								
Mercury	**U**	µg/L	0.20	1	PM09C12A	3/12/2009	3/12/2009	ALM

Analytical Laboratory Report

Client Identification:	**Envirologic Technologies, Inc.**	Sample Matrix:	**Ground Water**
Fibertec Project Number:	**33098**	Sample Number:	**33098-013B**

Client Sample Information

Project Identification:	**Kzoo Co**	Client Sample Description:	**GSB-10@6-10'**
Project Number:	**080503**	Client Sample Number:	**13**
Sample Date:	**3/3/2009**	Chain of Custody Number:	**82431**

Comments:

Definitions/ Qualifiers:

A: Spike recovery or precision unusable due to dilution.
B: The analyte was detected in the associated method blank.
E: The analyte was detected at a concentration greater than the calibration range, therefore the result is estimated.
J: The concentration is an estimated value.
U: The analyte was not detected at or above the reporting limit.
X: Matrix Interference has resulted in a raised reporting limit or distorted result.
W: Results reported on a wet-weight basis.
*: Value reported is outside QA limits

Analyte	Result	Units	Report Limit	Dilution Factor	Prep Batch	Prep Date/Time	Analysis Date/Time	Analyst
Polynuclear Aromatic Hydrocarbons (PNAs) (EPA 3535/EPA 8270C)								
Acenaphthene	**U**	µg/L	5.0	1	PS09C10E	3/10/2009	3/12/2009	BDA
Acenaphthylene	**U**	µg/L	5.0	1	PS09C10E	3/10/2009	3/12/2009	BDA
Anthracene	**U**	µg/L	5.0	1	PS09C10E	3/10/2009	3/12/2009	BDA
Benzo(a)anthracene	**U**	µg/L	1.0	1	PS09C10E	3/10/2009	3/12/2009	BDA
Benzo(a)pyrene	**U**	µg/L	1.0	1	PS09C10E	3/10/2009	3/12/2009	BDA
Benzo(b)fluoranthene	**U**	µg/L	1.0	1	PS09C10E	3/10/2009	3/12/2009	BDA
Benzo(ghi)perylene	**U**	µg/L	1.0	1	PS09C10E	3/10/2009	3/12/2009	BDA
Benzo(k)fluoranthene	**U**	µg/L	1.0	1	PS09C10E	3/10/2009	3/12/2009	BDA
Chrysene	**U**	µg/L	1.0	1	PS09C10E	3/10/2009	3/12/2009	BDA
Dibenzo(a,h)anthracene	**U**	µg/L	2.0	1	PS09C10E	3/10/2009	3/12/2009	BDA
Fluoranthene	**U**	µg/L	1.0	1	PS09C10E	3/10/2009	3/12/2009	BDA
Fluorene	**U**	µg/L	5.0	1	PS09C10E	3/10/2009	3/12/2009	BDA
Indeno(1,2,3-cd)pyrene	**U**	µg/L	2.0	1	PS09C10E	3/10/2009	3/12/2009	BDA
2-Methylnaphthalene	**U**	µg/L	5.0	1	PS09C10E	3/10/2009	3/12/2009	BDA
Phenanthrene	**U**	µg/L	2.0	1	PS09C10E	3/10/2009	3/12/2009	BDA
Pyrene	**U**	µg/L	5.0	1	PS09C10E	3/10/2009	3/12/2009	BDA

Analytical Laboratory Report

Client Identification:	**Envirologic Technologies, Inc.**	Sample Matrix:	**Soil/Solid**
Fibertec Project Number:	**33098**	Sample Number:	**33098-014**

Client Sample Information

Project Identification:	**Kzoo Co**	Client Sample Description:	**DUPLICATE-SOIL**
Project Number:	**080503**	Client Sample Number:	**14**
Sample Date:	**3/3/2009**	Chain of Custody Number:	**82431**

Comments: **All Results Reported On Dry Weight Basis. Percent Moisture = 5.19%.**

Definitions/ Qualifiers:
A: Spike recovery or precision unusable due to dilution.
B: The analyte was detected in the associated method blank.
E: The analyte was detected at a concentration greater than the calibration range, therefore the result is estimated.
J: The concentration is an estimated value.
U: The analyte was not detected at or above the reporting limit.
X: Matrix Interference has resulted in a raised reporting limit or distorted result.
W: Results reported on a wet-weight basis.
*: Value reported is outside QA limits

Analyte	Result	Units	Report Limit	Dilution Factor	Prep Batch	Prep Date/Time	Analysis Date/Time	Analyst
Plus List (VOCs), 5035 (EPA 5035/EPA 8260B)								
Acetone	**U**	µg/kg	1100	1	VA09C12a	3/3/2009	3/12/2009	JAS
Acrylonitrile	**U**	µg/kg	110	1	VA09C12a	3/3/2009	3/12/2009	JAS
Benzene	**U**	µg/kg	53	1	VA09C12a	3/3/2009	3/12/2009	JAS
Bromobenzene	**U**	µg/kg	110	1	VA09C12a	3/3/2009	3/12/2009	JAS
Bromochloromethane	**U**	µg/kg	110	1	VA09C12a	3/3/2009	3/12/2009	JAS
Bromodichloromethane	**U**	µg/kg	110	1	VA09C12a	3/3/2009	3/12/2009	JAS
Bromoform	**U**	µg/kg	110	1	VA09C12a	3/3/2009	3/12/2009	JAS
Bromomethane	**U**	µg/kg	210	1	VA09C12a	3/3/2009	3/12/2009	JAS
2-Butanone	**U**	µg/kg	790	1	VA09C12a	3/3/2009	3/12/2009	JAS
n-Butylbenzene	**U**	µg/kg	53	1	VA09C12a	3/3/2009	3/12/2009	JAS
sec-Butylbenzene	**U**	µg/kg	53	1	VA09C12a	3/3/2009	3/12/2009	JAS
tert-Butylbenzene	**U**	µg/kg	53	1	VA09C12a	3/3/2009	3/12/2009	JAS
Carbon Disulfide	**U**	µg/kg	260	1	VA09C12a	3/3/2009	3/12/2009	JAS
Carbon Tetrachloride	**U**	µg/kg	53	1	VA09C12a	3/3/2009	3/12/2009	JAS
Chlorobenzene	**U**	µg/kg	53	1	VA09C12a	3/3/2009	3/12/2009	JAS
Chloroethane	**U**	µg/kg	260	1	VA09C12a	3/3/2009	3/12/2009	JAS
Chloroform	**U**	µg/kg	53	1	VA09C12a	3/3/2009	3/12/2009	JAS
Chloromethane	**U**	µg/kg	260	1	VA09C12a	3/3/2009	3/12/2009	JAS
2-Chlorotoluene	**U**	µg/kg	53	1	VA09C12a	3/3/2009	3/12/2009	JAS
Dibromochloromethane	**U**	µg/kg	110	1	VA09C12a	3/3/2009	3/12/2009	JAS

Analytical Laboratory Report

Client Identification:	**Envirologic Technologies, Inc.**	Sample Matrix:	**Soil/Solid**
Fibertec Project Number:	**33098**	Sample Number:	**33098-014**

Client Sample Information

Project Identification:	**Kzoo Co**	Client Sample Description:	**DUPLICATE-SOIL**
Project Number:	**080503**	Client Sample Number:	**14**
Sample Date:	**3/3/2009**	Chain of Custody Number:	**82431**

Comments: **All Results Reported On Dry Weight Basis. Percent Moisture = 5.19%.**

Definitions/ Qualifiers:
A: Spike recovery or precision unusable due to dilution.
B: The analyte was detected in the associated method blank.
E: The analyte was detected at a concentration greater than the calibration range, therefore the result is estimated.
J: The concentration is an estimated value.
U: The analyte was not detected at or above the reporting limit.
X: Matrix Interference has resulted in a raised reporting limit or distorted result.
W: Results reported on a wet-weight basis.
*: Value reported is outside QA limits

Analyte	Result	Units	Report Limit	Dilution Factor	Prep Batch	Prep Date/Time	Analysis Date/Time	Analyst
Plus List (VOCs), 5035 (EPA 5035/EPA 8260B)								
1,2-Dibromo-3-chloropropane	**U**	µg/kg	11	1	VA09C12a	3/3/2009	3/12/2009	JAS
Dibromomethane	**U**	µg/kg	260	1	VA09C12a	3/3/2009	3/12/2009	JAS
1,2-Dichlorobenzene	**U**	µg/kg	110	1	VA09C12a	3/3/2009	3/12/2009	JAS
1,3-Dichlorobenzene	**U**	µg/kg	110	1	VA09C12a	3/3/2009	3/12/2009	JAS
1,4-Dichlorobenzene	**U**	µg/kg	110	1	VA09C12a	3/3/2009	3/12/2009	JAS
trans-1,4-Dichloro-2-butene	**U**	µg/kg	110	1	VA09C12a	3/3/2009	3/12/2009	JAS
Dichlorodifluoromethane	**U**	µg/kg	260	1	VA09C12a	3/3/2009	3/12/2009	JAS
1,1-Dichloroethane	**U**	µg/kg	53	1	VA09C12a	3/3/2009	3/12/2009	JAS
1,2-Dichloroethane	**U**	µg/kg	53	1	VA09C12a	3/3/2009	3/12/2009	JAS
1,1-Dichloroethene	**U**	µg/kg	53	1	VA09C12a	3/3/2009	3/12/2009	JAS
cis-1,2-Dichloroethene	**U**	µg/kg	53	1	VA09C12a	3/3/2009	3/12/2009	JAS
trans-1,2-Dichloroethene	**U**	µg/kg	53	1	VA09C12a	3/3/2009	3/12/2009	JAS
1,2-Dichloropropane	**U**	µg/kg	53	1	VA09C12a	3/3/2009	3/12/2009	JAS
cis-1,3-Dichloropropene	**U**	µg/kg	53	1	VA09C12a	3/3/2009	3/12/2009	JAS
trans-1,3-Dichloropropene	**U**	µg/kg	53	1	VA09C12a	3/3/2009	3/12/2009	JAS
Diethyl Ether	**U**	µg/kg	210	1	VA09C12a	3/3/2009	3/12/2009	JAS
Ethylbenzene	**U**	µg/kg	53	1	VA09C12a	3/3/2009	3/12/2009	JAS
Ethylene Dibromide	**U**	µg/kg	21	1	VA09C12a	3/3/2009	3/12/2009	JAS
Hexachloroethane	**U**	µg/kg	110	1	VA09C12a	3/3/2009	3/12/2009	JAS
2-Hexanone	**U**	µg/kg	2600	1	VA09C12a	3/3/2009	3/12/2009	JAS

Analytical Laboratory Report

Client Identification:	**Envirologic Technologies, Inc.**	Sample Matrix:	**Soil/Solid**
Fibertec Project Number:	**33098**	Sample Number:	**33098-014**

Client Sample Information

Project Identification:	**Kzoo Co**	Client Sample Description:	**DUPLICATE-SOIL**
Project Number:	**080503**	Client Sample Number:	**14**
Sample Date:	**3/3/2009**	Chain of Custody Number:	**82431**

Comments: **All Results Reported On Dry Weight Basis. Percent Moisture = 5.19%.**

Definitions/ Qualifiers:
A: Spike recovery or precision unusable due to dilution.
B: The analyte was detected in the associated method blank.
E: The analyte was detected at a concentration greater than the calibration range, therefore the result is estimated.
J: The concentration is an estimated value.
U: The analyte was not detected at or above the reporting limit.
X: Matrix Interference has resulted in a raised reporting limit or distorted result.
W: Results reported on a wet-weight basis.
*: Value reported is outside QA limits

Analyte	Result	Units	Report Limit	Dilution Factor	Prep Batch	Prep Date/Time	Analysis Date/Time	Analyst
Plus List (VOCs), 5035 (EPA 5035/EPA 8260B)								
Isopropylbenzene	**U**	µg/kg	260	1	VA09C12a	3/3/2009	3/12/2009	JAS
4-Methyl-2-pentanone	**U**	µg/kg	2600	1	VA09C12a	3/3/2009	3/12/2009	JAS
MTBE	**U**	µg/kg	260	1	VA09C12a	3/3/2009	3/12/2009	JAS
Methyl Iodide	**U**	µg/kg	110	1	VA09C12a	3/3/2009	3/12/2009	JAS
Methylene Chloride	**U**	µg/kg	110	1	VA09C12a	3/3/2009	3/12/2009	JAS
Naphthalene	**U**	µg/kg	350	1	VA09C12a	3/3/2009	3/12/2009	JAS
n-Propylbenzene	**U**	µg/kg	110	1	VA09C12a	3/3/2009	3/12/2009	JAS
Styrene	**U**	µg/kg	53	1	VA09C12a	3/3/2009	3/12/2009	JAS
1,1,1,2-Tetrachloroethane	**U**	µg/kg	110	1	VA09C12a	3/3/2009	3/12/2009	JAS
1,1,2,2-Tetrachloroethane	**U**	µg/kg	53	1	VA09C12a	3/3/2009	3/12/2009	JAS
Tetrachloroethene	**U**	µg/kg	53	1	VA09C12a	3/3/2009	3/12/2009	JAS
Toluene	**U**	µg/kg	110	1	VA09C12a	3/3/2009	3/12/2009	JAS
1,2,4-Trichlorobenzene	**U**	µg/kg	350	1	VA09C12a	3/3/2009	3/12/2009	JAS
1,1,1-Trichloroethane	**U**	µg/kg	53	1	VA09C12a	3/3/2009	3/12/2009	JAS
1,1,2-Trichloroethane	**U**	µg/kg	53	1	VA09C12a	3/3/2009	3/12/2009	JAS
Trichloroethene	**U**	µg/kg	53	1	VA09C12a	3/3/2009	3/12/2009	JAS
Trichlorofluoromethane	**U**	µg/kg	110	1	VA09C12a	3/3/2009	3/12/2009	JAS
1,2,3-Trichloropropane	**U**	µg/kg	110	1	VA09C12a	3/3/2009	3/12/2009	JAS
1,2,3-Trimethylbenzene	**U**	µg/kg	110	1	VA09C12a	3/3/2009	3/12/2009	JAS
1,2,4-Trimethylbenzene	**U**	µg/kg	110	1	VA09C12a	3/3/2009	3/12/2009	JAS

Analytical Laboratory Report

Client Identification:	**Envirologic Technologies, Inc.**	Sample Matrix:	**Soil/Solid**
Fibertec Project Number:	**33098**	Sample Number:	**33098-014**

Client Sample Information

Project Identification:	**Kzoo Co**	Client Sample Description:	**DUPLICATE-SOIL**
Project Number:	**080503**	Client Sample Number:	**14**
Sample Date:	**3/3/2009**	Chain of Custody Number:	**82431**

Comments: **All Results Reported On Dry Weight Basis. Percent Moisture = 5.19%.**

Definitions/ Qualifiers:

A: Spike recovery or precision unusable due to dilution.
B: The analyte was detected in the associated method blank.
E: The analyte was detected at a concentration greater than the calibration range, therefore the result is estimated.
J: The concentration is an estimated value.
U: The analyte was not detected at or above the reporting limit.
X: Matrix Interference has resulted in a raised reporting limit or distorted result.
W: Results reported on a wet-weight basis.
*: Value reported is outside QA limits

Analyte	Result	Units	Report Limit	Dilution Factor	Prep Batch	Prep Date/Time	Analysis Date/Time	Analyst
Plus List (VOCs), 5035 (EPA 5035/EPA 8260B)								
1,3,5-Trimethylbenzene	**U**	µg/kg	110	1	VA09C12a	3/3/2009	3/12/2009	JAS
Vinyl Chloride	**U**	µg/kg	42	1	VA09C12a	3/3/2009	3/12/2009	JAS
Xylenes	**U**	µg/kg	160	1	VA09C12a	3/3/2009	3/12/2009	JAS

Analytical Laboratory Report

Client Identification:	**Envirologic Technologies, Inc.**	Sample Matrix:	**Soil/Solid**
Fibertec Project Number:	**33098**	Sample Number:	**33098-014A**

Client Sample Information

Project Identification:	**Kzoo Co**	Client Sample Description:	**DUPLICATE-SOIL**
Project Number:	**080503**	Client Sample Number:	**14**
Sample Date:	**3/3/2009**	Chain of Custody Number:	**82431**

Comments: **All Results Reported On Dry Weight Basis. Percent Moisture = 5.19%.**

Definitions/ Qualifiers:
A: Spike recovery or precision unusable due to dilution.
B: The analyte was detected in the associated method blank.
E: The analyte was detected at a concentration greater than the calibration range, therefore the result is estimated.
J: The concentration is an estimated value.
U: The analyte was not detected at or above the reporting limit.
X: Matrix Interference has resulted in a raised reporting limit or distorted result.
W: Results reported on a wet-weight basis.
*: Value reported is outside QA limits

Analyte	Result	Units	Report Limit	Dilution Factor	Prep Batch	Prep Date/Time	Analysis Date/Time	Analyst
Dry Weight Determination (ASTM D 2974-87)								
Percent Moisture (Water Content)	**5.2**	%	0.1	1	MC090309	3/9/2009	3/10/2009	BMG
Trace Elements by ICP/MS (EPA 3050B/EPA 6020)								
Aluminum	**3200000**	µg/kg	1000	1	PT09C10D	3/10/2009	3/12/2009	MAP
Michigan 10 Elements by ICP/MS (EPA 3050B/EPA 6020)								
Arsenic	**3900**	µg/kg	100	1	PT09C10D	3/10/2009	3/12/2009	MAP
Barium	**27000**	µg/kg	1000	1	PT09C10D	3/10/2009	3/12/2009	MAP
Cadmium	**91**	µg/kg	50	1	PT09C10D	3/10/2009	3/12/2009	MAP
Chromium	**6900**	µg/kg	500	1	PT09C10D	3/10/2009	3/12/2009	MAP
Copper	**9000**	µg/kg	1000	1	PT09C10D	3/10/2009	3/12/2009	MAP
Lead	**15000**	µg/kg	1000	1	PT09C10D	3/10/2009	3/12/2009	MAP
Selenium	**U**	µg/kg	200	1	PT09C10D	3/10/2009	3/10/2009	MAP
Silver	**U**	µg/kg	100	1	PT09C10D	3/10/2009	3/12/2009	MAP
Zinc	**30000**	µg/kg	1000	1	PT09C10D	3/10/2009	3/12/2009	MAP
Mercury by CVAAS (EPA 7471A)								
Mercury	**U**	µg/kg	53	1	PM09C10B	3/10/2009	3/10/2009	ALM
Polynuclear Aromatic Hydrocarbons (PNAs) (EPA 3550B/EPA 8270C)								
Acenaphthene	**U**	µg/kg	350	1	PS09C11D	3/11/2009	3/12/2009	HLS
Acenaphthylene	**U**	µg/kg	350	1	PS09C11D	3/11/2009	3/12/2009	HLS
Anthracene	**U**	µg/kg	350	1	PS09C11D	3/11/2009	3/12/2009	HLS
Benzo(a)anthracene	**U**	µg/kg	350	1	PS09C11D	3/11/2009	3/12/2009	HLS
Benzo(a)pyrene	**U**	µg/kg	350	1	PS09C11D	3/11/2009	3/12/2009	HLS

Analytical Laboratory Report

Client Identification:	**Envirologic Technologies, Inc.**	Sample Matrix:	**Soil/Solid**
Fibertec Project Number:	**33098**	Sample Number:	**33098-014A**

Client Sample Information

Project Identification:	**Kzoo Co**	Client Sample Description:	**DUPLICATE-SOIL**
Project Number:	**080503**	Client Sample Number:	**14**
Sample Date:	**3/3/2009**	Chain of Custody Number:	**82431**

Comments: **All Results Reported On Dry Weight Basis. Percent Moisture = 5.19%.**

Definitions/ Qualifiers:

A: Spike recovery or precision unusable due to dilution.
B: The analyte was detected in the associated method blank.
E: The analyte was detected at a concentration greater than the calibration range, therefore the result is estimated.
J: The concentration is an estimated value.
U: The analyte was not detected at or above the reporting limit.
X: Matrix Interference has resulted in a raised reporting limit or distorted result.
W: Results reported on a wet-weight basis.
*: Value reported is outside QA limits

Analyte	Result	Units	Report Limit	Dilution Factor	Prep Batch	Prep Date/Time	Analysis Date/Time	Analyst
Polynuclear Aromatic Hydrocarbons (PNAs) (EPA 3550B/EPA 8270C)								
Benzo(b)fluoranthene	**U**	µg/kg	350	1	PS09C11D	3/11/2009	3/12/2009	HLS
Benzo(ghi)perylene	**U**	µg/kg	350	1	PS09C11D	3/11/2009	3/12/2009	HLS
Benzo(k)fluoranthene	**U**	µg/kg	350	1	PS09C11D	3/11/2009	3/12/2009	HLS
Chrysene	**U**	µg/kg	350	1	PS09C11D	3/11/2009	3/12/2009	HLS
Dibenzo(a,h)anthracene	**U**	µg/kg	350	1	PS09C11D	3/11/2009	3/12/2009	HLS
Fluoranthene	**U**	µg/kg	350	1	PS09C11D	3/11/2009	3/12/2009	HLS
Fluorene	**U**	µg/kg	350	1	PS09C11D	3/11/2009	3/12/2009	HLS
Indeno(1,2,3-cd)pyrene	**U**	µg/kg	350	1	PS09C11D	3/11/2009	3/12/2009	HLS
2-Methylnaphthalene	**U**	µg/kg	350	1	PS09C11D	3/11/2009	3/12/2009	HLS
Phenanthrene	**U**	µg/kg	350	1	PS09C11D	3/11/2009	3/12/2009	HLS
Pyrene	**U**	µg/kg	350	1	PS09C11D	3/11/2009	3/12/2009	HLS

Analytical Laboratory Report

Client Identification:	**Envirologic Technologies, Inc.**	Sample Matrix:	**Soil/Solid**
Fibertec Project Number:	**33098**	Sample Number:	**33098-015**

Client Sample Information

Project Identification:	**Kzoo Co**	Client Sample Description:	**GSB-8@0.5' MS**
Project Number:	**080503**	Client Sample Number:	**15**
Sample Date:	**3/3/2009**	Chain of Custody Number:	**82431**

Comments: **All Results Reported On Dry Weight Basis. Percent Moisture = 31.7%.**

Definitions/ Qualifiers:
A: Spike recovery or precision unusable due to dilution.
B: The analyte was detected in the associated method blank.
E: The analyte was detected at a concentration greater than the calibration range, therefore the result is estimated.
J: The concentration is an estimated value.
U: The analyte was not detected at or above the reporting limit.
X: Matrix Interference has resulted in a raised reporting limit or distorted result.
W: Results reported on a wet-weight basis.
*: Value reported is outside QA limits

Analyte	Result	Units	Report Limit	Dilution Factor	Prep Batch	Prep Date/Time	Analysis Date/Time	Analyst
Plus List (VOCs), 5035 (EPA 5035/EPA 8260B)								
Acetone	**64**	% Recovery	NA	1	VA09C11B	3/3/2009	3/12/2009	JAS
Acrylonitrile	**20**	% Recovery	NA	1	VA09C11B	3/3/2009	3/12/2009	JAS
Benzene	**100**	% Recovery	NA	1	VA09C11B	3/3/2009	3/12/2009	JAS
Bromobenzene	**104**	% Recovery	NA	1	VA09C11B	3/3/2009	3/12/2009	JAS
Bromochloromethane	**95**	% Recovery	NA	1	VA09C11B	3/3/2009	3/12/2009	JAS
Bromodichloromethane	**102**	% Recovery	NA	1	VA09C11B	3/3/2009	3/12/2009	JAS
Bromoform	**82**	% Recovery	NA	1	VA09C11B	3/3/2009	3/12/2009	JAS
Bromomethane	**188**	% Recovery	NA	1	VA09C11B	3/3/2009	3/12/2009	JAS
2-Butanone	**53**	% Recovery	NA	1	VA09C11B	3/3/2009	3/12/2009	JAS
n-Butylbenzene	**104**	% Recovery	NA	1	VA09C11B	3/3/2009	3/12/2009	JAS
sec-Butylbenzene	**113**	% Recovery	NA	1	VA09C11B	3/3/2009	3/12/2009	JAS
tert-Butylbenzene	**108**	% Recovery	NA	1	VA09C11B	3/3/2009	3/12/2009	JAS
Carbon Disulfide	**80**	% Recovery	NA	1	VA09C11B	3/3/2009	3/12/2009	JAS
Carbon Tetrachloride	**106**	% Recovery	NA	1	VA09C11B	3/3/2009	3/12/2009	JAS
Chlorobenzene	**100**	% Recovery	NA	1	VA09C11B	3/3/2009	3/12/2009	JAS
Chloroethane	**83**	% Recovery	NA	1	VA09C11B	3/3/2009	3/12/2009	JAS
Chloroform	**98**	% Recovery	NA	1	VA09C11B	3/3/2009	3/12/2009	JAS
Chloromethane	**72**	% Recovery	NA	1	VA09C11B	3/3/2009	3/12/2009	JAS
2-Chlorotoluene	**107**	% Recovery	NA	1	VA09C11B	3/3/2009	3/12/2009	JAS
Dibromochloromethane	**92**	% Recovery	NA	1	VA09C11B	3/3/2009	3/12/2009	JAS

Analytical Laboratory Report

Client Identification:	**Envirologic Technologies, Inc.**	Sample Matrix:	**Soil/Solid**
Fibertec Project Number:	**33098**	Sample Number:	**33098-015**

Client Sample Information

Project Identification:	**Kzoo Co**	Client Sample Description:	**GSB-8@0.5' MS**
Project Number:	**080503**	Client Sample Number:	**15**
Sample Date:	**3/3/2009**	Chain of Custody Number:	**82431**

Comments: **All Results Reported On Dry Weight Basis. Percent Moisture = 31.7%.**

Definitions/ Qualifiers:
A: Spike recovery or precision unusable due to dilution.
B: The analyte was detected in the associated method blank.
E: The analyte was detected at a concentration greater than the calibration range, therefore the result is estimated.
J: The concentration is an estimated value.
U: The analyte was not detected at or above the reporting limit.
X: Matrix Interference has resulted in a raised reporting limit or distorted result.
W: Results reported on a wet-weight basis.
*: Value reported is outside QA limits

Analyte	Result	Units	Report Limit	Dilution Factor	Prep Batch	Prep Date/Time	Analysis Date/Time	Analyst
Plus List (VOCs), 5035 (EPA 5035/EPA 8260B)								
1,2-Dibromo-3-chloropropane	**92**	% Recovery	NA	1	VA09C11B	3/3/2009	3/12/2009	JAS
Dibromomethane	**101**	% Recovery	NA	1	VA09C11B	3/3/2009	3/12/2009	JAS
1,2-Dichlorobenzene	**102**	% Recovery	NA	1	VA09C11B	3/3/2009	3/12/2009	JAS
1,3-Dichlorobenzene	**101**	% Recovery	NA	1	VA09C11B	3/3/2009	3/12/2009	JAS
1,4-Dichlorobenzene	**97**	% Recovery	NA	1	VA09C11B	3/3/2009	3/12/2009	JAS
trans-1,4-Dichloro-2-butene	**51**	% Recovery	NA	1	VA09C11B	3/3/2009	3/12/2009	JAS
Dichlorodifluoromethane	**91**	% Recovery	NA	1	VA09C11B	3/3/2009	3/12/2009	JAS
1,1-Dichloroethane	**94**	% Recovery	NA	1	VA09C11B	3/3/2009	3/12/2009	JAS
1,2-Dichloroethane	**103**	% Recovery	NA	1	VA09C11B	3/3/2009	3/12/2009	JAS
1,1-Dichloroethene	**83**	% Recovery	NA	1	VA09C11B	3/3/2009	3/12/2009	JAS
cis-1,2-Dichloroethene	**91**	% Recovery	NA	1	VA09C11B	3/3/2009	3/12/2009	JAS
trans-1,2-Dichloroethene	**95**	% Recovery	NA	1	VA09C11B	3/3/2009	3/12/2009	JAS
1,2-Dichloropropane	**104**	% Recovery	NA	1	VA09C11B	3/3/2009	3/12/2009	JAS
cis-1,3-Dichloropropene	**115**	% Recovery	NA	1	VA09C11B	3/3/2009	3/12/2009	JAS
trans-1,3-Dichloropropene	**95**	% Recovery	NA	1	VA09C11B	3/3/2009	3/12/2009	JAS
Diethyl Ether	**47**	% Recovery	NA	1	VA09C11B	3/3/2009	3/12/2009	JAS
Ethylbenzene	**104**	% Recovery	NA	1	VA09C11B	3/3/2009	3/12/2009	JAS
Ethylene Dibromide	**106**	% Recovery	NA	1	VA09C11B	3/3/2009	3/12/2009	JAS
Hexachloroethane	**41**	% Recovery	NA	1	VA09C11B	3/3/2009	3/12/2009	JAS
2-Hexanone	**77**	% Recovery	NA	1	VA09C11B	3/3/2009	3/12/2009	JAS

Analytical Laboratory Report

Client Identification:	**Envirologic Technologies, Inc.**	Sample Matrix:	**Soil/Solid**
Fibertec Project Number:	**33098**	Sample Number:	**33098-015**

Client Sample Information

Project Identification:	**Kzoo Co**	Client Sample Description:	**GSB-8@0.5' MS**
Project Number:	**080503**	Client Sample Number:	**15**
Sample Date:	**3/3/2009**	Chain of Custody Number:	**82431**

Comments: **All Results Reported On Dry Weight Basis. Percent Moisture = 31.7%.**

Definitions/ Qualifiers:
A: Spike recovery or precision unusable due to dilution.
B: The analyte was detected in the associated method blank.
E: The analyte was detected at a concentration greater than the calibration range, therefore the result is estimated.
J: The concentration is an estimated value.
U: The analyte was not detected at or above the reporting limit.
X: Matrix Interference has resulted in a raised reporting limit or distorted result.
W: Results reported on a wet-weight basis.
*: Value reported is outside QA limits

Analyte	Result	Units	Report Limit	Dilution Factor	Prep Batch	Prep Date/Time	Analysis Date/Time	Analyst
Plus List (VOCs), 5035 (EPA 5035/EPA 8260B)								
Isopropylbenzene	**128**	% Recovery	NA	1	VA09C11B	3/3/2009	3/12/2009	JAS
4-Methyl-2-pentanone	**64**	% Recovery	NA	1	VA09C11B	3/3/2009	3/12/2009	JAS
MTBE	**111**	% Recovery	NA	1	VA09C11B	3/3/2009	3/12/2009	JAS
Methyl Iodide	**89**	% Recovery	NA	1	VA09C11B	3/3/2009	3/12/2009	JAS
Methylene Chloride	**95**	% Recovery	NA	1	VA09C11B	3/3/2009	3/12/2009	JAS
Naphthalene	**105**	% Recovery	NA	1	VA09C11B	3/3/2009	3/12/2009	JAS
n-Propylbenzene	**116**	% Recovery	NA	1	VA09C11B	3/3/2009	3/12/2009	JAS
Styrene	**96**	% Recovery	NA	1	VA09C11B	3/3/2009	3/12/2009	JAS
1,1,1,2-Tetrachloroethane	**95**	% Recovery	NA	1	VA09C11B	3/3/2009	3/12/2009	JAS
1,1,2,2-Tetrachloroethane	**116**	% Recovery	NA	1	VA09C11B	3/3/2009	3/12/2009	JAS
Tetrachloroethene	**126**	% Recovery	NA	1	VA09C11B	3/3/2009	3/12/2009	JAS
Toluene	**102**	% Recovery	NA	1	VA09C11B	3/3/2009	3/12/2009	JAS
1,2,4-Trichlorobenzene	**92**	% Recovery	NA	1	VA09C11B	3/3/2009	3/12/2009	JAS
1,1,1-Trichloroethane	**103**	% Recovery	NA	1	VA09C11B	3/3/2009	3/12/2009	JAS
1,1,2-Trichloroethane	**107**	% Recovery	NA	1	VA09C11B	3/3/2009	3/12/2009	JAS
Trichloroethene	**107**	% Recovery	NA	1	VA09C11B	3/3/2009	3/12/2009	JAS
Trichlorofluoromethane	**80**	% Recovery	NA	1	VA09C11B	3/3/2009	3/12/2009	JAS
1,2,3-Trichloropropane	**101**	% Recovery	NA	1	VA09C11B	3/3/2009	3/12/2009	JAS
1,2,3-Trimethylbenzene	**109**	% Recovery	NA	1	VA09C11B	3/3/2009	3/12/2009	JAS
1,2,4-Trimethylbenzene	**108**	% Recovery	NA	1	VA09C11B	3/3/2009	3/12/2009	JAS

Analytical Laboratory Report

Client Identification:	**Envirologic Technologies, Inc.**	Sample Matrix:	**Soil/Solid**
Fibertec Project Number:	**33098**	Sample Number:	**33098-015**

Client Sample Information

Project Identification:	**Kzoo Co**	Client Sample Description:	**GSB-8@0.5' MS**
Project Number:	**080503**	Client Sample Number:	**15**
Sample Date:	**3/3/2009**	Chain of Custody Number:	**82431**

Comments: **All Results Reported On Dry Weight Basis. Percent Moisture = 31.7%.**

Definitions/ Qualifiers:

A: Spike recovery or precision unusable due to dilution.
B: The analyte was detected in the associated method blank.
E: The analyte was detected at a concentration greater than the calibration range, therefore the result is estimated.
J: The concentration is an estimated value.
U: The analyte was not detected at or above the reporting limit.
X: Matrix Interference has resulted in a raised reporting limit or distorted result.
W: Results reported on a wet-weight basis.
*: Value reported is outside QA limits

Analyte	Result	Units	Report Limit	Dilution Factor	Prep Batch	Prep Date/Time	Analysis Date/Time	Analyst
Plus List (VOCs), 5035 (EPA 5035/EPA 8260B)								
1,3,5-Trimethylbenzene	**110**	% Recovery	NA	1	VA09C11B	3/3/2009	3/12/2009	JAS
Vinyl Chloride	**77**	% Recovery	NA	1	VA09C11B	3/3/2009	3/12/2009	JAS
Xylenes	**106**	% Recovery	NA	1	VA09C11B	3/3/2009	3/12/2009	JAS

Analytical Laboratory Report

Client Identification:	**Envirologic Technologies, Inc.**	Sample Matrix:	**Soil/Solid**
Fibertec Project Number:	**33098**	Sample Number:	**33098-015A**

Client Sample Information

Project Identification:	**Kzoo Co**	Client Sample Description:	**GSB-8@0.5' MS**
Project Number:	**080503**	Client Sample Number:	**15**
Sample Date:	**3/3/2009**	Chain of Custody Number:	**82431**

Comments: **All Results Reported On Dry Weight Basis. Percent Moisture = 31.7%.**

Definitions/ Qualifiers:
A: Spike recovery or precision unusable due to dilution.
B: The analyte was detected in the associated method blank.
E: The analyte was detected at a concentration greater than the calibration range, therefore the result is estimated.
J: The concentration is an estimated value.
U: The analyte was not detected at or above the reporting limit.
X: Matrix Interference has resulted in a raised reporting limit or distorted result.
W: Results reported on a wet-weight basis.
*: Value reported is outside QA limits

Analyte	Result	Units	Report Limit	Dilution Factor	Prep Batch	Prep Date/Time	Analysis Date/Time	Analyst
Dry Weight Determination (ASTM D 2974-87)								
Percent Moisture (Water Content)	**32**	%	0.1	1	MC090309	3/9/2009	3/11/2009	BMG
Trace Elements by ICP/MS (EPA 3050B/EPA 6020)								
Aluminum	**--- X**	% Recovery	NA	1	PT09C10D	3/10/2009	3/12/2009	MAP
Michigan 10 Elements by ICP/MS (EPA 3050B/EPA 6020)								
Arsenic	**--- X**	% Recovery	NA	1	PT09C10D	3/10/2009	3/10/2009	MAP
Barium	**--- X**	% Recovery	NA	1	PT09C10D	3/10/2009	3/12/2009	MAP
Cadmium	**109**	% Recovery	NA	1	PT09C10D	3/10/2009	3/12/2009	MAP
Chromium	**112**	% Recovery	NA	1	PT09C10D	3/10/2009	3/12/2009	MAP
Copper	**144**	% Recovery	NA	1	PT09C10D	3/10/2009	3/12/2009	MAP
Lead	**52**	% Recovery	NA	1	PT09C10D	3/10/2009	3/12/2009	MAP
Selenium	**46**	% Recovery	NA	1	PT09C10D	3/10/2009	3/12/2009	MAP
Silver	**76**	% Recovery	NA	1	PT09C10D	3/10/2009	3/12/2009	MAP
Zinc	**81**	% Recovery	NA	1	PT09C10D	3/10/2009	3/12/2009	MAP
Mercury by CVAAS (EPA 7471A)								
Mercury	**133**	% Recovery	NA	1	PM09C10B	3/10/2009	3/10/2009	ALM
Polynuclear Aromatic Hydrocarbons (PNAs) (EPA 3550B/EPA 8270C)								
Acenaphthene	**80**	% Recovery	NA	1	PS09C11D	3/11/2009	3/13/2009	BDA
Acenaphthylene	**82**	% Recovery	NA	1	PS09C11D	3/11/2009	3/13/2009	BDA
Anthracene	**87**	% Recovery	NA	1	PS09C11D	3/11/2009	3/13/2009	BDA
Benzo(a)anthracene	**82**	% Recovery	NA	1	PS09C11D	3/11/2009	3/13/2009	BDA
Benzo(a)pyrene	**95**	% Recovery	NA	1	PS09C11D	3/11/2009	3/13/2009	BDA

Analytical Laboratory Report

Client Identification:	**Envirologic Technologies, Inc.**	Sample Matrix:	**Soil/Solid**
Fibertec Project Number:	**33098**	Sample Number:	**33098-015A**

Client Sample Information

Project Identification:	**Kzoo Co**	Client Sample Description:	**GSB-8@0.5' MS**
Project Number:	**080503**	Client Sample Number:	**15**
Sample Date:	**3/3/2009**	Chain of Custody Number:	**82431**

Comments: **All Results Reported On Dry Weight Basis. Percent Moisture = 31.7%.**

Definitions/ Qualifiers:

A: Spike recovery or precision unusable due to dilution.
B: The analyte was detected in the associated method blank.
E: The analyte was detected at a concentration greater than the calibration range, therefore the result is estimated.
J: The concentration is an estimated value.
U: The analyte was not detected at or above the reporting limit.
X: Matrix Interference has resulted in a raised reporting limit or distorted result.
W: Results reported on a wet-weight basis.
*: Value reported is outside QA limits

Analyte	Result	Units	Report Limit	Dilution Factor	Prep Batch	Prep Date/Time	Analysis Date/Time	Analyst
Polynuclear Aromatic Hydrocarbons (PNAs) (EPA 3550B/EPA 8270C)								
Benzo(b)fluoranthene	**87**	% Recovery	NA	1	PS09C11D	3/11/2009	3/13/2009	BDA
Benzo(ghi)perylene	**96**	% Recovery	NA	1	PS09C11D	3/11/2009	3/13/2009	BDA
Benzo(k)fluoranthene	**103**	% Recovery	NA	1	PS09C11D	3/11/2009	3/13/2009	BDA
Chrysene	**90**	% Recovery	NA	1	PS09C11D	3/11/2009	3/13/2009	BDA
Dibenzo(a,h)anthracene	**85**	% Recovery	NA	1	PS09C11D	3/11/2009	3/13/2009	BDA
Fluoranthene	**93**	% Recovery	NA	1	PS09C11D	3/11/2009	3/13/2009	BDA
Fluorene	**79**	% Recovery	NA	1	PS09C11D	3/11/2009	3/13/2009	BDA
Indeno(1,2,3-cd)pyrene	**96**	% Recovery	NA	1	PS09C11D	3/11/2009	3/13/2009	BDA
2-Methylnaphthalene	**67**	% Recovery	NA	1	PS09C11D	3/11/2009	3/13/2009	BDA
Phenanthrene	**91**	% Recovery	NA	1	PS09C11D	3/11/2009	3/13/2009	BDA
Pyrene	**93**	% Recovery	NA	1	PS09C11D	3/11/2009	3/13/2009	BDA

Analytical Laboratory Report

Client Identification:	**Envirologic Technologies, Inc.**	Sample Matrix:	**Soil/Solid**
Fibertec Project Number:	**33098**	Sample Number:	**33098-016**

Client Sample Information

Project Identification:	**Kzoo Co**	Client Sample Description:	**GSB-8@0.5' MSD**
Project Number:	**080503**	Client Sample Number:	**16**
Sample Date:	**3/3/2009**	Chain of Custody Number:	**82431**

Comments: **All Results Reported On Dry Weight Basis. Percent Moisture = 48.4%.**

Definitions/ Qualifiers:
A: Spike recovery or precision unusable due to dilution.
B: The analyte was detected in the associated method blank.
E: The analyte was detected at a concentration greater than the calibration range, therefore the result is estimated.
J: The concentration is an estimated value.
U: The analyte was not detected at or above the reporting limit.
X: Matrix Interference has resulted in a raised reporting limit or distorted result.
W: Results reported on a wet-weight basis.
*: Value reported is outside QA limits

Analyte	Result	Units	Report Limit	Dilution Factor	Prep Batch	Prep Date/Time	Analysis Date/Time	Analyst
Plus List (VOCs), 5035 (EPA 5035/EPA 8260B)								
Acetone	**51**	% Recovery	NA	1	VA09C11B	3/3/2009	3/12/2009	JAS
Acrylonitrile	**21**	% Recovery	NA	1	VA09C11B	3/3/2009	3/12/2009	JAS
Benzene	**106**	% Recovery	NA	1	VA09C11B	3/3/2009	3/12/2009	JAS
Bromobenzene	**111**	% Recovery	NA	1	VA09C11B	3/3/2009	3/12/2009	JAS
Bromochloromethane	**100**	% Recovery	NA	1	VA09C11B	3/3/2009	3/12/2009	JAS
Bromodichloromethane	**110**	% Recovery	NA	1	VA09C11B	3/3/2009	3/12/2009	JAS
Bromoform	**91**	% Recovery	NA	1	VA09C11B	3/3/2009	3/12/2009	JAS
Bromomethane	**200**	% Recovery	NA	1	VA09C11B	3/3/2009	3/12/2009	JAS
2-Butanone	**44**	% Recovery	NA	1	VA09C11B	3/3/2009	3/12/2009	JAS
n-Butylbenzene	**111**	% Recovery	NA	1	VA09C11B	3/3/2009	3/12/2009	JAS
sec-Butylbenzene	**122**	% Recovery	NA	1	VA09C11B	3/3/2009	3/12/2009	JAS
tert-Butylbenzene	**120**	% Recovery	NA	1	VA09C11B	3/3/2009	3/12/2009	JAS
Carbon Disulfide	**90**	% Recovery	NA	1	VA09C11B	3/3/2009	3/12/2009	JAS
Carbon Tetrachloride	**115**	% Recovery	NA	1	VA09C11B	3/3/2009	3/12/2009	JAS
Chlorobenzene	**106**	% Recovery	NA	1	VA09C11B	3/3/2009	3/12/2009	JAS
Chloroethane	**87**	% Recovery	NA	1	VA09C11B	3/3/2009	3/12/2009	JAS
Chloroform	**104**	% Recovery	NA	1	VA09C11B	3/3/2009	3/12/2009	JAS
Chloromethane	**78**	% Recovery	NA	1	VA09C11B	3/3/2009	3/12/2009	JAS
2-Chlorotoluene	**116**	% Recovery	NA	1	VA09C11B	3/3/2009	3/12/2009	JAS
Dibromochloromethane	**99**	% Recovery	NA	1	VA09C11B	3/3/2009	3/12/2009	JAS

Analytical Laboratory Report

Client Identification:	**Envirologic Technologies, Inc.**	Sample Matrix:	**Soil/Solid**
Fibertec Project Number:	**33098**	Sample Number:	**33098-016**

Client Sample Information

Project Identification:	**Kzoo Co**	Client Sample Description:	**GSB-8@0.5' MSD**
Project Number:	**080503**	Client Sample Number:	**16**
Sample Date:	**3/3/2009**	Chain of Custody Number:	**82431**

Comments: **All Results Reported On Dry Weight Basis. Percent Moisture = 48.4%.**

Definitions/ Qualifiers:
A: Spike recovery or precision unusable due to dilution.
B: The analyte was detected in the associated method blank.
E: The analyte was detected at a concentration greater than the calibration range, therefore the result is estimated.
J: The concentration is an estimated value.
U: The analyte was not detected at or above the reporting limit.
X: Matrix Interference has resulted in a raised reporting limit or distorted result.
W: Results reported on a wet-weight basis.
*: Value reported is outside QA limits

Analyte	Result	Units	Report Limit	Dilution Factor	Prep Batch	Prep Date/Time	Analysis Date/Time	Analyst
Plus List (VOCs), 5035 (EPA 5035/EPA 8260B)								
1,2-Dibromo-3-chloropropane	**99**	% Recovery	NA	1	VA09C11B	3/3/2009	3/12/2009	JAS
Dibromomethane	**105**	% Recovery	NA	1	VA09C11B	3/3/2009	3/12/2009	JAS
1,2-Dichlorobenzene	**109**	% Recovery	NA	1	VA09C11B	3/3/2009	3/12/2009	JAS
1,3-Dichlorobenzene	**108**	% Recovery	NA	1	VA09C11B	3/3/2009	3/12/2009	JAS
1,4-Dichlorobenzene	**105**	% Recovery	NA	1	VA09C11B	3/3/2009	3/12/2009	JAS
trans-1,4-Dichloro-2-butene	**55**	% Recovery	NA	1	VA09C11B	3/3/2009	3/12/2009	JAS
Dichlorodifluoromethane	**100**	% Recovery	NA	1	VA09C11B	3/3/2009	3/12/2009	JAS
1,1-Dichloroethane	**99**	% Recovery	NA	1	VA09C11B	3/3/2009	3/12/2009	JAS
1,2-Dichloroethane	**109**	% Recovery	NA	1	VA09C11B	3/3/2009	3/12/2009	JAS
1,1-Dichloroethene	**88**	% Recovery	NA	1	VA09C11B	3/3/2009	3/12/2009	JAS
cis-1,2-Dichloroethene	**95**	% Recovery	NA	1	VA09C11B	3/3/2009	3/12/2009	JAS
trans-1,2-Dichloroethene	**100**	% Recovery	NA	1	VA09C11B	3/3/2009	3/12/2009	JAS
1,2-Dichloropropane	**111**	% Recovery	NA	1	VA09C11B	3/3/2009	3/12/2009	JAS
cis-1,3-Dichloropropene	**123**	% Recovery	NA	1	VA09C11B	3/3/2009	3/12/2009	JAS
trans-1,3-Dichloropropene	**102**	% Recovery	NA	1	VA09C11B	3/3/2009	3/12/2009	JAS
Diethyl Ether	**50**	% Recovery	NA	1	VA09C11B	3/3/2009	3/12/2009	JAS
Ethylbenzene	**110**	% Recovery	NA	1	VA09C11B	3/3/2009	3/12/2009	JAS
Ethylene Dibromide	**111**	% Recovery	NA	1	VA09C11B	3/3/2009	3/12/2009	JAS
Hexachloroethane	**45**	% Recovery	NA	1	VA09C11B	3/3/2009	3/12/2009	JAS
2-Hexanone	**63**	% Recovery	NA	1	VA09C11B	3/3/2009	3/12/2009	JAS

Analytical Laboratory Report

Client Identification:	**Envirologic Technologies, Inc.**	Sample Matrix:	**Soil/Solid**
Fibertec Project Number:	**33098**	Sample Number:	**33098-016**

Client Sample Information

Project Identification:	**Kzoo Co**	Client Sample Description:	**GSB-8@0.5' MSD**
Project Number:	**080503**	Client Sample Number:	**16**
Sample Date:	**3/3/2009**	Chain of Custody Number:	**82431**

Comments: **All Results Reported On Dry Weight Basis. Percent Moisture = 48.4%.**

Definitions/ Qualifiers:
A: Spike recovery or precision unusable due to dilution.
B: The analyte was detected in the associated method blank.
E: The analyte was detected at a concentration greater than the calibration range, therefore the result is estimated.
J: The concentration is an estimated value.
U: The analyte was not detected at or above the reporting limit.
X: Matrix Interference has resulted in a raised reporting limit or distorted result.
W: Results reported on a wet-weight basis.
*: Value reported is outside QA limits

Analyte	Result	Units	Report Limit	Dilution Factor	Prep Batch	Prep Date/Time	Analysis Date/Time	Analyst
Plus List (VOCs), 5035 (EPA 5035/EPA 8260B)								
Isopropylbenzene	**136**	% Recovery	NA	1	VA09C11B	3/3/2009	3/12/2009	JAS
4-Methyl-2-pentanone	**69**	% Recovery	NA	1	VA09C11B	3/3/2009	3/12/2009	JAS
MTBE	**116**	% Recovery	NA	1	VA09C11B	3/3/2009	3/12/2009	JAS
Methyl Iodide	**98**	% Recovery	NA	1	VA09C11B	3/3/2009	3/12/2009	JAS
Methylene Chloride	**99**	% Recovery	NA	1	VA09C11B	3/3/2009	3/12/2009	JAS
Naphthalene	**114**	% Recovery	NA	1	VA09C11B	3/3/2009	3/12/2009	JAS
n-Propylbenzene	**124**	% Recovery	NA	1	VA09C11B	3/3/2009	3/12/2009	JAS
Styrene	**103**	% Recovery	NA	1	VA09C11B	3/3/2009	3/12/2009	JAS
1,1,1,2-Tetrachloroethane	**101**	% Recovery	NA	1	VA09C11B	3/3/2009	3/12/2009	JAS
1,1,2,2-Tetrachloroethane	**124**	% Recovery	NA	1	VA09C11B	3/3/2009	3/12/2009	JAS
Tetrachloroethene	**118**	% Recovery	NA	1	VA09C11B	3/3/2009	3/12/2009	JAS
Toluene	**107**	% Recovery	NA	1	VA09C11B	3/3/2009	3/12/2009	JAS
1,2,4-Trichlorobenzene	**98**	% Recovery	NA	1	VA09C11B	3/3/2009	3/12/2009	JAS
1,1,1-Trichloroethane	**110**	% Recovery	NA	1	VA09C11B	3/3/2009	3/12/2009	JAS
1,1,2-Trichloroethane	**113**	% Recovery	NA	1	VA09C11B	3/3/2009	3/12/2009	JAS
Trichloroethene	**113**	% Recovery	NA	1	VA09C11B	3/3/2009	3/12/2009	JAS
Trichlorofluoromethane	**86**	% Recovery	NA	1	VA09C11B	3/3/2009	3/12/2009	JAS
1,2,3-Trichloropropane	**108**	% Recovery	NA	1	VA09C11B	3/3/2009	3/12/2009	JAS
1,2,3-Trimethylbenzene	**117**	% Recovery	NA	1	VA09C11B	3/3/2009	3/12/2009	JAS
1,2,4-Trimethylbenzene	**115**	% Recovery	NA	1	VA09C11B	3/3/2009	3/12/2009	JAS

Analytical Laboratory Report

Client Identification:	**Envirologic Technologies, Inc.**	Sample Matrix:	**Soil/Solid**
Fibertec Project Number:	**33098**	Sample Number:	**33098-016**

Client Sample Information

Project Identification:	**Kzoo Co**	Client Sample Description:	**GSB-8@0.5' MSD**
Project Number:	**080503**	Client Sample Number:	**16**
Sample Date:	**3/3/2009**	Chain of Custody Number:	**82431**

Comments: **All Results Reported On Dry Weight Basis. Percent Moisture = 48.4%.**

Definitions/ Qualifiers:

A: Spike recovery or precision unusable due to dilution.
B: The analyte was detected in the associated method blank.
E: The analyte was detected at a concentration greater than the calibration range, therefore the result is estimated.
J: The concentration is an estimated value.
U: The analyte was not detected at or above the reporting limit.
X: Matrix Interference has resulted in a raised reporting limit or distorted result.
W: Results reported on a wet-weight basis.
*: Value reported is outside QA limits

Analyte	Result	Units	Report Limit	Dilution Factor	Prep Batch	Prep Date/Time	Analysis Date/Time	Analyst
Plus List (VOCs), 5035 (EPA 5035/EPA 8260B)								
1,3,5-Trimethylbenzene	**119**	% Recovery	NA	1	VA09C11B	3/3/2009	3/12/2009	JAS
Vinyl Chloride	**84**	% Recovery	NA	1	VA09C11B	3/3/2009	3/12/2009	JAS
Xylenes	**113**	% Recovery	NA	1	VA09C11B	3/3/2009	3/12/2009	JAS

Analytical Laboratory Report

Client Identification:	**Envirologic Technologies, Inc.**	Sample Matrix:	**Soil/Solid**
Fibertec Project Number:	**33098**	Sample Number:	**33098-016A**

Client Sample Information

Project Identification:	**Kzoo Co**	Client Sample Description:	**GSB-8@0.5' MSD**
Project Number:	**080503**	Client Sample Number:	**16**
Sample Date:	**3/3/2009**	Chain of Custody Number:	**82431**

Comments: **All Results Reported On Dry Weight Basis. Percent Moisture = 48.4%.**

Definitions/ Qualifiers:
A: Spike recovery or precision unusable due to dilution.
B: The analyte was detected in the associated method blank.
E: The analyte was detected at a concentration greater than the calibration range, therefore the result is estimated.
J: The concentration is an estimated value.
U: The analyte was not detected at or above the reporting limit.
X: Matrix Interference has resulted in a raised reporting limit or distorted result.
W: Results reported on a wet-weight basis.
*: Value reported is outside QA limits

Analyte	Result	Units	Report Limit	Dilution Factor	Prep Batch	Prep Date/Time	Analysis Date/Time	Analyst
Dry Weight Determination (ASTM D 2974-87)								
Percent Moisture (Water Content)	**48**	%	0.1	1	MC090309	3/9/2009	3/10/2009	BMG
Trace Elements by ICP/MS (EPA 3050B/EPA 6020)								
Aluminum	--- X	% Recovery	NA	1	PT09C10D	3/10/2009	3/12/2009	MAP
Michigan 10 Elements by ICP/MS (EPA 3050B/EPA 6020)								
Arsenic	--- X	% Recovery	NA	1	PT09C10D	3/10/2009	3/12/2009	MAP
Barium	--- X	% Recovery	NA	1	PT09C10D	3/10/2009	3/12/2009	MAP
Cadmium	**113**	% Recovery	NA	1	PT09C10D	3/10/2009	3/12/2009	MAP
Chromium	**109**	% Recovery	NA	1	PT09C10D	3/10/2009	3/12/2009	MAP
Copper	**144**	% Recovery	NA	1	PT09C10D	3/10/2009	3/12/2009	MAP
Lead	**76**	% Recovery	NA	1	PT09C10D	3/10/2009	3/12/2009	MAP
Selenium	**56**	% Recovery	NA	1	PT09C10D	3/10/2009	3/12/2009	MAP
Silver	**76**	% Recovery	NA	1	PT09C10D	3/10/2009	3/12/2009	MAP
Zinc	**126**	% Recovery	NA	1	PT09C10D	3/10/2009	3/12/2009	MAP
Mercury by CVAAS (EPA 7471A)								
Mercury	**127**	% Recovery	NA	1	PM09C10B	3/10/2009	3/10/2009	ALM
Polynuclear Aromatic Hydrocarbons (PNAs) (EPA 3550B/EPA 8270C)								
Acenaphthene	**79**	% Recovery	NA	1	PS09C11D	3/11/2009	3/13/2009	BDA
Acenaphthylene	**83**	% Recovery	NA	1	PS09C11D	3/11/2009	3/13/2009	BDA
Anthracene	**90**	% Recovery	NA	1	PS09C11D	3/11/2009	3/13/2009	BDA
Benzo(a)anthracene	**86**	% Recovery	NA	1	PS09C11D	3/11/2009	3/13/2009	BDA
Benzo(a)pyrene	**94**	% Recovery	NA	1	PS09C11D	3/11/2009	3/13/2009	BDA

Analytical Laboratory Report

Client Identification:	**Envirologic Technologies, Inc.**	Sample Matrix:	**Soil/Solid**
Fibertec Project Number:	**33098**	Sample Number:	**33098-016A**

Client Sample Information

Project Identification:	**Kzoo Co**	Client Sample Description:	**GSB-8@0.5' MSD**
Project Number:	**080503**	Client Sample Number:	**16**
Sample Date:	**3/3/2009**	Chain of Custody Number:	**82431**

Comments: **All Results Reported On Dry Weight Basis. Percent Moisture = 48.4%.**

Definitions/ Qualifiers:

A: Spike recovery or precision unusable due to dilution.
B: The analyte was detected in the associated method blank.
E: The analyte was detected at a concentration greater than the calibration range, therefore the result is estimated.
J: The concentration is an estimated value.
U: The analyte was not detected at or above the reporting limit.
X: Matrix Interference has resulted in a raised reporting limit or distorted result.
W: Results reported on a wet-weight basis.
*: Value reported is outside QA limits

Analyte	Result	Units	Report Limit	Dilution Factor	Prep Batch	Prep Date/Time	Analysis Date/Time	Analyst
Polynuclear Aromatic Hydrocarbons (PNAs) (EPA 3550B/EPA 8270C)								
Benzo(b)fluoranthene	**84**	% Recovery	NA	1	PS09C11D	3/11/2009	3/13/2009	BDA
Benzo(ghi)perylene	**85**	% Recovery	NA	1	PS09C11D	3/11/2009	3/13/2009	BDA
Benzo(k)fluoranthene	**101**	% Recovery	NA	1	PS09C11D	3/11/2009	3/13/2009	BDA
Chrysene	**100**	% Recovery	NA	1	PS09C11D	3/11/2009	3/13/2009	BDA
Dibenzo(a,h)anthracene	**82**	% Recovery	NA	1	PS09C11D	3/11/2009	3/13/2009	BDA
Fluoranthene	**93**	% Recovery	NA	1	PS09C11D	3/11/2009	3/13/2009	BDA
Fluorene	**78**	% Recovery	NA	1	PS09C11D	3/11/2009	3/13/2009	BDA
Indeno(1,2,3-cd)pyrene	**98**	% Recovery	NA	1	PS09C11D	3/11/2009	3/13/2009	BDA
2-Methylnaphthalene	**66**	% Recovery	NA	1	PS09C11D	3/11/2009	3/13/2009	BDA
Phenanthrene	**93**	% Recovery	NA	1	PS09C11D	3/11/2009	3/13/2009	BDA
Pyrene	**98**	% Recovery	NA	1	PS09C11D	3/11/2009	3/13/2009	BDA

Analytical Laboratory Report

Client Identification:	**Envirologic Technologies, Inc.**	Sample Matrix:	**Ground Water**
Fibertec Project Number:	**33098**	Sample Number:	**33098-017**

Client Sample Information

Project Identification:	**Kzoo Co**	Client Sample Description:	**EB-SOIL**
Project Number:	**080503**	Client Sample Number:	**17**
Sample Date:	**3/3/2009**	Chain of Custody Number:	**82431**

Comments:

Definitions/ Qualifiers:

A: Spike recovery or precision unusable due to dilution.
B: The analyte was detected in the associated method blank.
E: The analyte was detected at a concentration greater than the calibration range, therefore the result is estimated.
J: The concentration is an estimated value.
U: The analyte was not detected at or above the reporting limit.
X: Matrix Interference has resulted in a raised reporting limit or distorted result.
W: Results reported on a wet-weight basis.
*: Value reported is outside QA limits

Analyte	Result	Units	Report Limit	Dilution Factor	Prep Batch	Prep Date/Time	Analysis Date/Time	Analyst
Plus List (VOCs) (EPA 5030B/EPA 8260B) (Estimated result for trans-1,4-dichloro-2-butene, compound failed low on CCV)								
Acetone	**U**	µg/L	50	1	VB09C10A	3/10/2009	3/10/2009	BAG
Acrylonitrile	**U**	µg/L	2.0	1	VB09C10A	3/10/2009	3/10/2009	BAG
Benzene	**U**	µg/L	1.0	1	VB09C10A	3/10/2009	3/10/2009	BAG
Bromobenzene	**U**	µg/L	1.0	1	VB09C10A	3/10/2009	3/10/2009	BAG
Bromochloromethane	**U**	µg/L	1.0	1	VB09C10A	3/10/2009	3/10/2009	BAG
Bromodichloromethane	**U**	µg/L	1.0	1	VB09C10A	3/10/2009	3/10/2009	BAG
Bromoform	**U**	µg/L	1.0	1	VB09C10A	3/10/2009	3/10/2009	BAG
Bromomethane	**U**	µg/L	5.0	1	VB09C10A	3/10/2009	3/10/2009	BAG
2-Butanone	**U**	µg/L	25	1	VB09C10A	3/10/2009	3/10/2009	BAG
n-Butylbenzene	**U**	µg/L	1.0	1	VB09C10A	3/10/2009	3/10/2009	BAG
sec-Butylbenzene	**U**	µg/L	1.0	1	VB09C10A	3/10/2009	3/10/2009	BAG
tert-Butylbenzene	**U**	µg/L	1.0	1	VB09C10A	3/10/2009	3/10/2009	BAG
Carbon Disulfide	**U**	µg/L	5.0	1	VB09C10A	3/10/2009	3/10/2009	BAG
Carbon Tetrachloride	**U**	µg/L	1.0	1	VB09C10A	3/10/2009	3/10/2009	BAG
Chlorobenzene	**U**	µg/L	1.0	1	VB09C10A	3/10/2009	3/10/2009	BAG
Chloroethane	**U**	µg/L	5.0	1	VB09C10A	3/10/2009	3/10/2009	BAG
Chloroform	**U**	µg/L	1.0	1	VB09C10A	3/10/2009	3/10/2009	BAG
Chloromethane	**U**	µg/L	5.0	1	VB09C10A	3/10/2009	3/10/2009	BAG
2-Chlorotoluene	**U**	µg/L	5.0	1	VB09C10A	3/10/2009	3/10/2009	BAG
Dibromochloromethane	**U**	µg/L	5.0	1	VB09C10A	3/10/2009	3/10/2009	BAG

Analytical Laboratory Report

Client Identification:	**Envirologic Technologies, Inc.**	Sample Matrix:	**Ground Water**
Fibertec Project Number:	**33098**	Sample Number:	**33098-017**

Client Sample Information

Project Identification:	**Kzoo Co**	Client Sample Description:	**EB-SOIL**
Project Number:	**080503**	Client Sample Number:	**17**
Sample Date:	**3/3/2009**	Chain of Custody Number:	**82431**

Comments:

Definitions/ Qualifiers:

A: Spike recovery or precision unusable due to dilution.
B: The analyte was detected in the associated method blank.
E: The analyte was detected at a concentration greater than the calibration range, therefore the result is estimated.
J: The concentration is an estimated value.
U: The analyte was not detected at or above the reporting limit.
X: Matrix Interference has resulted in a raised reporting limit or distorted result.
W: Results reported on a wet-weight basis.
*: Value reported is outside QA limits

Analyte	Result	Units	Report Limit	Dilution Factor	Prep Batch	Prep Date/Time	Analysis Date/Time	Analyst
Plus List (VOCs) (EPA 5030B/EPA 8260B) (Estimated result for trans-1,4-dichloro-2-butene, compound failed low on CCV)								
1,2-Dibromo-3-chloropropane	**U**	µg/L	1.0	1	VB09C10A	3/10/2009	3/10/2009	BAG
Dibromomethane	**U**	µg/L	5.0	1	VB09C10A	3/10/2009	3/10/2009	BAG
1,2-Dichlorobenzene	**U**	µg/L	1.0	1	VB09C10A	3/10/2009	3/10/2009	BAG
1,3-Dichlorobenzene	**U**	µg/L	1.0	1	VB09C10A	3/10/2009	3/10/2009	BAG
1,4-Dichlorobenzene	**U**	µg/L	1.0	1	VB09C10A	3/10/2009	3/10/2009	BAG
trans-1,4-Dichloro-2-butene	**U**	µg/L	1.0	1	VB09C10A	3/10/2009	3/10/2009	BAG
Dichlorodifluoromethane	**U**	µg/L	5.0	1	VB09C10A	3/10/2009	3/10/2009	BAG
1,1-Dichloroethane	**U**	µg/L	1.0	1	VB09C10A	3/10/2009	3/10/2009	BAG
1,2-Dichloroethane	**U**	µg/L	1.0	1	VB09C10A	3/10/2009	3/10/2009	BAG
1,1-Dichloroethene	**U**	µg/L	1.0	1	VB09C10A	3/10/2009	3/10/2009	BAG
cis-1,2-Dichloroethene	**U**	µg/L	1.0	1	VB09C10A	3/10/2009	3/10/2009	BAG
trans-1,2-Dichloroethene	**U**	µg/L	1.0	1	VB09C10A	3/10/2009	3/10/2009	BAG
1,2-Dichloropropane	**U**	µg/L	1.0	1	VB09C10A	3/10/2009	3/10/2009	BAG
cis-1,3-Dichloropropene	**U**	µg/L	1.0	1	VB09C10A	3/10/2009	3/10/2009	BAG
trans-1,3-Dichloropropene	**U**	µg/L	1.0	1	VB09C10A	3/10/2009	3/10/2009	BAG
Diethyl Ether	**U**	µg/L	10	1	VB09C10A	3/10/2009	3/10/2009	BAG
Ethylbenzene	**U**	µg/L	1.0	1	VB09C10A	3/10/2009	3/10/2009	BAG
Ethylene Dibromide	**U**	µg/L	1.0	1	VB09C10A	3/10/2009	3/10/2009	BAG
Hexachloroethane	**U**	µg/L	2.0	1	VB09C10A	3/10/2009	3/10/2009	BAG
2-Hexanone	**U**	µg/L	50	1	VB09C10A	3/10/2009	3/10/2009	BAG

Analytical Laboratory Report

Client Identification:	**Envirologic Technologies, Inc.**	Sample Matrix:	**Ground Water**
Fibertec Project Number:	**33098**	Sample Number:	**33098-017**

Client Sample Information

Project Identification:	**Kzoo Co**	Client Sample Description:	**EB-SOIL**
Project Number:	**080503**	Client Sample Number:	**17**
Sample Date:	**3/3/2009**	Chain of Custody Number:	**82431**

Comments:

Definitions/ Qualifiers:

A: Spike recovery or precision unusable due to dilution.
B: The analyte was detected in the associated method blank.
E: The analyte was detected at a concentration greater than the calibration range, therefore the result is estimated.
J: The concentration is an estimated value.
U: The analyte was not detected at or above the reporting limit.
X: Matrix Interference has resulted in a raised reporting limit or distorted result.
W: Results reported on a wet-weight basis.
*: Value reported is outside QA limits

Analyte	Result	Units	Report Limit	Dilution Factor	Prep Batch	Prep Date/Time	Analysis Date/Time	Analyst
Plus List (VOCs) (EPA 5030B/EPA 8260B) (Estimated result for trans-1,4-dichloro-2-butene, compound failed low on CCV)								
Isopropylbenzene	**U**	µg/L	5.0	1	VB09C10A	3/10/2009	3/10/2009	BAG
4-Methyl-2-pentanone	**U**	µg/L	50	1	VB09C10A	3/10/2009	3/10/2009	BAG
MTBE	**U**	µg/L	5.0	1	VB09C10A	3/10/2009	3/10/2009	BAG
Methyl Iodide	**U**	µg/L	1.0	1	VB09C10A	3/10/2009	3/10/2009	BAG
Methylene Chloride	**U**	µg/L	5.0	1	VB09C10A	3/10/2009	3/10/2009	BAG
2-Methylnaphthalene	**U**	µg/L	5.0	1	VB09C10A	3/10/2009	3/10/2009	BAG
Naphthalene	**U**	µg/L	5.0	1	VB09C10A	3/10/2009	3/10/2009	BAG
n-Propylbenzene	**U**	µg/L	1.0	1	VB09C10A	3/10/2009	3/10/2009	BAG
Styrene	**U**	µg/L	1.0	1	VB09C10A	3/10/2009	3/10/2009	BAG
1,1,1,2-Tetrachloroethane	**U**	µg/L	1.0	1	VB09C10A	3/10/2009	3/10/2009	BAG
1,1,2,2-Tetrachloroethane	**U**	µg/L	1.0	1	VB09C10A	3/10/2009	3/10/2009	BAG
Tetrachloroethene	**U**	µg/L	1.0	1	VB09C10A	3/10/2009	3/10/2009	BAG
Toluene	**U**	µg/L	1.0	1	VB09C10A	3/10/2009	3/10/2009	BAG
1,2,4-Trichlorobenzene	**U**	µg/L	5.0	1	VB09C10A	3/10/2009	3/10/2009	BAG
1,1,1-Trichloroethane	**U**	µg/L	1.0	1	VB09C10A	3/10/2009	3/10/2009	BAG
1,1,2-Trichloroethane	**U**	µg/L	1.0	1	VB09C10A	3/10/2009	3/10/2009	BAG
Trichloroethene	**U**	µg/L	1.0	1	VB09C10A	3/10/2009	3/10/2009	BAG
Trichlorofluoromethane	**U**	µg/L	1.0	1	VB09C10A	3/10/2009	3/10/2009	BAG
1,2,3-Trichloropropane	**U**	µg/L	1.0	1	VB09C10A	3/10/2009	3/10/2009	BAG
1,2,3-Trimethylbenzene	**U**	µg/L	1.0	1	VB09C10A	3/10/2009	3/10/2009	BAG

Analytical Laboratory Report

Client Identification:	**Envirologic Technologies, Inc.**	Sample Matrix:	**Ground Water**
Fibertec Project Number:	**33098**	Sample Number:	**33098-017**

Client Sample Information

Project Identification:	**Kzoo Co**	Client Sample Description:	**EB-SOIL**
Project Number:	**080503**	Client Sample Number:	**17**
Sample Date:	**3/3/2009**	Chain of Custody Number:	**82431**

Comments:

Definitions/ Qualifiers:

A: Spike recovery or precision unusable due to dilution.
B: The analyte was detected in the associated method blank.
E: The analyte was detected at a concentration greater than the calibration range, therefore the result is estimated.
J: The concentration is an estimated value.
U: The analyte was not detected at or above the reporting limit.
X: Matrix Interference has resulted in a raised reporting limit or distorted result.
W: Results reported on a wet-weight basis.
*: Value reported is outside QA limits

Analyte	Result	Units	Report Limit	Dilution Factor	Prep Batch	Prep Date/Time	Analysis Date/Time	Analyst
Plus List (VOCs) (EPA 5030B/EPA 8260B) (Estimated result for trans-1,4-dichloro-2-butene, compound failed low on CCV)								
1,2,4-Trimethylbenzene	**U**	µg/L	1.0	1	VB09C10A	3/10/2009	3/10/2009	BAG
1,3,5-Trimethylbenzene	**U**	µg/L	1.0	1	VB09C10A	3/10/2009	3/10/2009	BAG
Vinyl Chloride	**U**	µg/L	1.0	1	VB09C10A	3/10/2009	3/10/2009	BAG
Xylenes	**U**	µg/L	3.0	1	VB09C10A	3/10/2009	3/10/2009	BAG

Analytical Laboratory Report

Client Identification:	**Envirologic Technologies, Inc.**	Sample Matrix:	**Ground Water**
Fibertec Project Number:	**33098**	Sample Number:	**33098-018**

Client Sample Information

Project Identification:	**Kzoo Co**	Client Sample Description:	**GSB-3@7-11' MS**
Project Number:	**080503**	Client Sample Number:	**18**
Sample Date:	**3/3/2009**	Chain of Custody Number:	**82431**

Comments:

Definitions/ Qualifiers:

A: Spike recovery or precision unusable due to dilution.
B: The analyte was detected in the associated method blank.
E: The analyte was detected at a concentration greater than the calibration range, therefore the result is estimated.
J: The concentration is an estimated value.
U: The analyte was not detected at or above the reporting limit.
X: Matrix Interference has resulted in a raised reporting limit or distorted result.
W: Results reported on a wet-weight basis.
*: Value reported is outside QA limits

Analyte	Result	Units	Report Limit	Dilution Factor	Prep Batch	Prep Date/Time	Analysis Date/Time	Analyst
Plus List (VOCs) (EPA 5030B/EPA 8260B)								
Acetone	**42**	% Recovery	NA	1	VB09C11A	3/11/2009	3/11/2009	BAG
Acrylonitrile	**18**	% Recovery	NA	1	VB09C11A	3/11/2009	3/11/2009	BAG
Benzene	**91**	% Recovery	NA	1	VB09C11A	3/11/2009	3/11/2009	BAG
Bromobenzene	**90**	% Recovery	NA	1	VB09C11A	3/11/2009	3/11/2009	BAG
Bromochloromethane	**94**	% Recovery	NA	1	VB09C11A	3/11/2009	3/11/2009	BAG
Bromodichloromethane	**102**	% Recovery	NA	1	VB09C11A	3/11/2009	3/11/2009	BAG
Bromoform	**94**	% Recovery	NA	1	VB09C11A	3/11/2009	3/11/2009	BAG
Bromomethane	**135**	% Recovery	NA	1	VB09C11A	3/11/2009	3/11/2009	BAG
2-Butanone	**47**	% Recovery	NA	1	VB09C11A	3/11/2009	3/11/2009	BAG
n-Butylbenzene	**71**	% Recovery	NA	1	VB09C11A	3/11/2009	3/11/2009	BAG
sec-Butylbenzene	**76**	% Recovery	NA	1	VB09C11A	3/11/2009	3/11/2009	BAG
tert-Butylbenzene	**84**	% Recovery	NA	1	VB09C11A	3/11/2009	3/11/2009	BAG
Carbon Disulfide	**88**	% Recovery	NA	1	VB09C11A	3/11/2009	3/11/2009	BAG
Carbon Tetrachloride	**92**	% Recovery	NA	1	VB09C11A	3/11/2009	3/11/2009	BAG
Chlorobenzene	**88**	% Recovery	NA	1	VB09C11A	3/11/2009	3/11/2009	BAG
Chloroethane	**95**	% Recovery	NA	1	VB09C11A	3/11/2009	3/11/2009	BAG
Chloroform	**95**	% Recovery	NA	1	VB09C11A	3/11/2009	3/11/2009	BAG
Chloromethane	**108**	% Recovery	NA	1	VB09C11A	3/11/2009	3/11/2009	BAG
2-Chlorotoluene	**87**	% Recovery	NA	1	VB09C11A	3/11/2009	3/11/2009	BAG
Dibromochloromethane	**113**	% Recovery	NA	1	VB09C11A	3/11/2009	3/11/2009	BAG

Analytical Laboratory Report

Client Identification:	**Envirologic Technologies, Inc.**	Sample Matrix:	**Ground Water**
Fibertec Project Number:	**33098**	Sample Number:	**33098-018**

Client Sample Information

Project Identification:	**Kzoo Co**	Client Sample Description:	**GSB-3@7-11' MS**
Project Number:	**080503**	Client Sample Number:	**18**
Sample Date:	**3/3/2009**	Chain of Custody Number:	**82431**

Comments:

Definitions/ Qualifiers:

A: Spike recovery or precision unusable due to dilution.
B: The analyte was detected in the associated method blank.
E: The analyte was detected at a concentration greater than the calibration range, therefore the result is estimated.
J: The concentration is an estimated value.
U: The analyte was not detected at or above the reporting limit.
X: Matrix Interference has resulted in a raised reporting limit or distorted result.
W: Results reported on a wet-weight basis.
*: Value reported is outside QA limits

Analyte	Result	Units	Report Limit	Dilution Factor	Prep Batch	Prep Date/Time	Analysis Date/Time	Analyst
Plus List (VOCs) (EPA 5030B/EPA 8260B)								
1,2-Dibromo-3-chloropropane	**100**	% Recovery	NA	1	VB09C11A	3/11/2009	3/11/2009	BAG
Dibromomethane	**94**	% Recovery	NA	1	VB09C11A	3/11/2009	3/11/2009	BAG
1,2-Dichlorobenzene	**87**	% Recovery	NA	1	VB09C11A	3/11/2009	3/11/2009	BAG
1,3-Dichlorobenzene	**82**	% Recovery	NA	1	VB09C11A	3/11/2009	3/11/2009	BAG
1,4-Dichlorobenzene	**81**	% Recovery	NA	1	VB09C11A	3/11/2009	3/11/2009	BAG
trans-1,4-Dichloro-2-butene	**49**	% Recovery	NA	1	VB09C11A	3/11/2009	3/11/2009	BAG
Dichlorodifluoromethane	**63**	% Recovery	NA	1	VB09C11A	3/11/2009	3/11/2009	BAG
1,1-Dichloroethane	**96**	% Recovery	NA	1	VB09C11A	3/11/2009	3/11/2009	BAG
1,2-Dichloroethane	**108**	% Recovery	NA	1	VB09C11A	3/11/2009	3/11/2009	BAG
1,1-Dichloroethene	**88**	% Recovery	NA	1	VB09C11A	3/11/2009	3/11/2009	BAG
cis-1,2-Dichloroethene	**91**	% Recovery	NA	1	VB09C11A	3/11/2009	3/11/2009	BAG
trans-1,2-Dichloroethene	**91**	% Recovery	NA	1	VB09C11A	3/11/2009	3/11/2009	BAG
1,2-Dichloropropane	**97**	% Recovery	NA	1	VB09C11A	3/11/2009	3/11/2009	BAG
cis-1,3-Dichloropropene	**104**	% Recovery	NA	1	VB09C11A	3/11/2009	3/11/2009	BAG
trans-1,3-Dichloropropene	**107**	% Recovery	NA	1	VB09C11A	3/11/2009	3/11/2009	BAG
Diethyl Ether	**50**	% Recovery	NA	1	VB09C11A	3/11/2009	3/11/2009	BAG
Ethylbenzene	**89**	% Recovery	NA	1	VB09C11A	3/11/2009	3/11/2009	BAG
Ethylene Dibromide	**96**	% Recovery	NA	1	VB09C11A	3/11/2009	3/11/2009	BAG
Hexachloroethane	**35**	% Recovery	NA	1	VB09C11A	3/11/2009	3/11/2009	BAG
2-Hexanone	**56**	% Recovery	NA	1	VB09C11A	3/11/2009	3/11/2009	BAG

Analytical Laboratory Report

Client Identification:	**Envirologic Technologies, Inc.**	Sample Matrix:	**Ground Water**
Fibertec Project Number:	**33098**	Sample Number:	**33098-018**

Client Sample Information

Project Identification:	**Kzoo Co**	Client Sample Description:	**GSB-3@7-11' MS**
Project Number:	**080503**	Client Sample Number:	**18**
Sample Date:	**3/3/2009**	Chain of Custody Number:	**82431**

Comments:

Definitions/ Qualifiers:

A: Spike recovery or precision unusable due to dilution.
B: The analyte was detected in the associated method blank.
E: The analyte was detected at a concentration greater than the calibration range, therefore the result is estimated.
J: The concentration is an estimated value.
U: The analyte was not detected at or above the reporting limit.
X: Matrix Interference has resulted in a raised reporting limit or distorted result.
W: Results reported on a wet-weight basis.
*: Value reported is outside QA limits

Analyte	Result	Units	Report Limit	Dilution Factor	Prep Batch	Prep Date/Time	Analysis Date/Time	Analyst
Plus List (VOCs) (EPA 5030B/EPA 8260B)								
Isopropylbenzene	**101**	% Recovery	NA	1	VB09C11A	3/11/2009	3/11/2009	BAG
4-Methyl-2-pentanone	**57**	% Recovery	NA	1	VB09C11A	3/11/2009	3/11/2009	BAG
MTBE	**102**	% Recovery	NA	1	VB09C11A	3/11/2009	3/11/2009	BAG
Methyl Iodide	**99**	% Recovery	NA	1	VB09C11A	3/11/2009	3/11/2009	BAG
Methylene Chloride	**92**	% Recovery	NA	1	VB09C11A	3/11/2009	3/11/2009	BAG
Naphthalene	**91**	% Recovery	NA	1	VB09C11A	3/11/2009	3/11/2009	BAG
n-Propylbenzene	**85**	% Recovery	NA	1	VB09C11A	3/11/2009	3/11/2009	BAG
Styrene	**94**	% Recovery	NA	1	VB09C11A	3/11/2009	3/11/2009	BAG
1,1,1,2-Tetrachloroethane	**105**	% Recovery	NA	1	VB09C11A	3/11/2009	3/11/2009	BAG
1,1,2,2-Tetrachloroethane	**97**	% Recovery	NA	1	VB09C11A	3/11/2009	3/11/2009	BAG
Tetrachloroethene	**79**	% Recovery	NA	1	VB09C11A	3/11/2009	3/11/2009	BAG
Toluene	**91**	% Recovery	NA	1	VB09C11A	3/11/2009	3/11/2009	BAG
1,2,4-Trichlorobenzene	**75**	% Recovery	NA	1	VB09C11A	3/11/2009	3/11/2009	BAG
1,1,1-Trichloroethane	**93**	% Recovery	NA	1	VB09C11A	3/11/2009	3/11/2009	BAG
1,1,2-Trichloroethane	**96**	% Recovery	NA	1	VB09C11A	3/11/2009	3/11/2009	BAG
Trichloroethene	**90**	% Recovery	NA	1	VB09C11A	3/11/2009	3/11/2009	BAG
Trichlorofluoromethane	**72**	% Recovery	NA	1	VB09C11A	3/11/2009	3/11/2009	BAG
1,2,3-Trichloropropane	**89**	% Recovery	NA	1	VB09C11A	3/11/2009	3/11/2009	BAG
1,2,3-Trimethylbenzene	**92**	% Recovery	NA	1	VB09C11A	3/11/2009	3/11/2009	BAG
1,2,4-Trimethylbenzene	**89**	% Recovery	NA	1	VB09C11A	3/11/2009	3/11/2009	BAG

Analytical Laboratory Report

Client Identification:	**Envirologic Technologies, Inc.**	Sample Matrix:	**Ground Water**
Fibertec Project Number:	**33098**	Sample Number:	**33098-018**

Client Sample Information

Project Identification:	**Kzoo Co**	Client Sample Description:	**GSB-3@7-11' MS**
Project Number:	**080503**	Client Sample Number:	**18**
Sample Date:	**3/3/2009**	Chain of Custody Number:	**82431**

Comments:

Definitions/ Qualifiers:

A: Spike recovery or precision unusable due to dilution.
B: The analyte was detected in the associated method blank.
E: The analyte was detected at a concentration greater than the calibration range, therefore the result is estimated.
J: The concentration is an estimated value.
U: The analyte was not detected at or above the reporting limit.
X: Matrix Interference has resulted in a raised reporting limit or distorted result.
W: Results reported on a wet-weight basis.
*: Value reported is outside QA limits

Analyte	Result	Units	Report Limit	Dilution Factor	Prep Batch	Prep Date/Time	Analysis Date/Time	Analyst
Plus List (VOCs) (EPA 5030B/EPA 8260B)								
1,3,5-Trimethylbenzene	**85**	% Recovery	NA	1	VB09C11A	3/11/2009	3/11/2009	BAG
Vinyl Chloride	**87**	% Recovery	NA	1	VB09C11A	3/11/2009	3/11/2009	BAG
Xylenes	**93**	% Recovery	NA	1	VB09C11A	3/11/2009	3/11/2009	BAG

Analytical Laboratory Report

Client Identification:	**Envirologic Technologies, Inc.**	Sample Matrix:	**Ground Water**
Fibertec Project Number:	**33098**	Sample Number:	**33098-018A**

Client Sample Information

Project Identification:	**Kzoo Co**	Client Sample Description:	**GSB-3@7-11' MS**
Project Number:	**080503**	Client Sample Number:	**18**
Sample Date:	**3/3/2009**	Chain of Custody Number:	**82431**

Comments:

Definitions/ Qualifiers:

A: Spike recovery or precision unusable due to dilution.
B: The analyte was detected in the associated method blank.
E: The analyte was detected at a concentration greater than the calibration range, therefore the result is estimated.
J: The concentration is an estimated value.
U: The analyte was not detected at or above the reporting limit.
X: Matrix Interference has resulted in a raised reporting limit or distorted result.
W: Results reported on a wet-weight basis.
*: Value reported is outside QA limits

Analyte	Result	Units	Report Limit	Dilution Factor	Prep Batch	Prep Date/Time	Analysis Date/Time	Analyst
Trace Elements by ICP/MS, Dissolved (CODE FF/EPA 6020)								
Aluminum	**106**	% Recovery	NA	1	PT09C11E	3/3/2009	3/13/2009	JLH
Michigan 10 Elements by ICP/MS, Dissolved (CODE FF/EPA 6020)								
Arsenic	**106**	% Recovery	NA	1	PT09C11E	3/3/2009	3/13/2009	JLH
Barium	**99**	% Recovery	NA	1	PT09C11E	3/3/2009	3/13/2009	JLH
Cadmium	**102**	% Recovery	NA	1	PT09C11E	3/3/2009	3/13/2009	JLH
Chromium	**105**	% Recovery	NA	1	PT09C11E	3/3/2009	3/13/2009	JLH
Copper	**100**	% Recovery	NA	1	PT09C11E	3/3/2009	3/13/2009	JLH
Lead	**97**	% Recovery	NA	1	PT09C11E	3/3/2009	3/13/2009	JLH
Selenium	**98**	% Recovery	NA	1	PT09C11E	3/3/2009	3/13/2009	JLH
Silver	**102**	% Recovery	NA	1	PT09C11E	3/3/2009	3/13/2009	JLH
Zinc	**103**	% Recovery	NA	1	PT09C11E	3/3/2009	3/13/2009	JLH
Mercury by CVAAS, Dissolved (EPA 7470A)								
Mercury	**95**	% Recovery	NA	1	PM09C12A	3/12/2009	3/12/2009	ALM

Analytical Laboratory Report

Client Identification:	**Envirologic Technologies, Inc.**	Sample Matrix:	**Ground Water**
Fibertec Project Number:	**33098**	Sample Number:	**33098-018B**

Client Sample Information

Project Identification:	**Kzoo Co**	Client Sample Description:	**GSB-3@7-11' MS**
Project Number:	**080503**	Client Sample Number:	**18**
Sample Date:	**3/3/2009**	Chain of Custody Number:	**82431**

Comments:

Definitions/ Qualifiers:

A: Spike recovery or precision unusable due to dilution.
B: The analyte was detected in the associated method blank.
E: The analyte was detected at a concentration greater than the calibration range, therefore the result is estimated.
J: The concentration is an estimated value.
U: The analyte was not detected at or above the reporting limit.
X: Matrix Interference has resulted in a raised reporting limit or distorted result.
W: Results reported on a wet-weight basis.
*: Value reported is outside QA limits

Analyte	Result	Units	Report Limit	Dilution Factor	Prep Batch	Prep Date/Time	Analysis Date/Time	Analyst
Polynuclear Aromatic Hydrocarbons (PNAs) (EPA 3535/EPA 8270C)								
Acenaphthene	**73**	% Recovery	NA	1	PS09C10E	3/10/2009	3/12/2009	BDA
Acenaphthylene	**82**	% Recovery	NA	1	PS09C10E	3/10/2009	3/12/2009	BDA
Anthracene	**83**	% Recovery	NA	1	PS09C10E	3/10/2009	3/12/2009	BDA
Benzo(a)anthracene	**82**	% Recovery	NA	1	PS09C10E	3/10/2009	3/12/2009	BDA
Benzo(a)pyrene	**94**	% Recovery	NA	1	PS09C10E	3/10/2009	3/12/2009	BDA
Benzo(b)fluoranthene	**90**	% Recovery	NA	1	PS09C10E	3/10/2009	3/12/2009	BDA
Benzo(ghi)perylene	**80**	% Recovery	NA	1	PS09C10E	3/10/2009	3/12/2009	BDA
Benzo(k)fluoranthene	**104**	% Recovery	NA	1	PS09C10E	3/10/2009	3/12/2009	BDA
Chrysene	**87**	% Recovery	NA	1	PS09C10E	3/10/2009	3/12/2009	BDA
Dibenzo(a,h)anthracene	**82**	% Recovery	NA	1	PS09C10E	3/10/2009	3/12/2009	BDA
Fluoranthene	**83**	% Recovery	NA	1	PS09C10E	3/10/2009	3/12/2009	BDA
Fluorene	**75**	% Recovery	NA	1	PS09C10E	3/10/2009	3/12/2009	BDA
Indeno(1,2,3-cd)pyrene	**76**	% Recovery	NA	1	PS09C10E	3/10/2009	3/12/2009	BDA
2-Methylnaphthalene	**61**	% Recovery	NA	1	PS09C10E	3/10/2009	3/12/2009	BDA
Phenanthrene	**86**	% Recovery	NA	1	PS09C10E	3/10/2009	3/12/2009	BDA
Pyrene	**102**	% Recovery	NA	1	PS09C10E	3/10/2009	3/12/2009	BDA

Analytical Laboratory Report

Client Identification:	**Envirologic Technologies, Inc.**	Sample Matrix:	**Ground Water**
Fibertec Project Number:	**33098**	Sample Number:	**33098-019**

Client Sample Information

Project Identification:	**Kzoo Co**	Client Sample Description:	**GSB-3@7-11' MSD**
Project Number:	**080503**	Client Sample Number:	**19**
Sample Date:	**3/3/2009**	Chain of Custody Number:	**82431**

Comments:

Definitions/ Qualifiers:

A: Spike recovery or precision unusable due to dilution.
B: The analyte was detected in the associated method blank.
E: The analyte was detected at a concentration greater than the calibration range, therefore the result is estimated.
J: The concentration is an estimated value.
U: The analyte was not detected at or above the reporting limit.
X: Matrix Interference has resulted in a raised reporting limit or distorted result.
W: Results reported on a wet-weight basis.
*: Value reported is outside QA limits

Analyte	Result	Units	Report Limit	Dilution Factor	Prep Batch	Prep Date/Time	Analysis Date/Time	Analyst
Plus List (VOCs) (EPA 5030B/EPA 8260B)								
Acetone	**41**	% Recovery	NA	1	VB09C11A	3/11/2009	3/11/2009	BAG
Acrylonitrile	**17**	% Recovery	NA	1	VB09C11A	3/11/2009	3/11/2009	BAG
Benzene	**87**	% Recovery	NA	1	VB09C11A	3/11/2009	3/11/2009	BAG
Bromobenzene	**87**	% Recovery	NA	1	VB09C11A	3/11/2009	3/11/2009	BAG
Bromochloromethane	**91**	% Recovery	NA	1	VB09C11A	3/11/2009	3/11/2009	BAG
Bromodichloromethane	**98**	% Recovery	NA	1	VB09C11A	3/11/2009	3/11/2009	BAG
Bromoform	**91**	% Recovery	NA	1	VB09C11A	3/11/2009	3/11/2009	BAG
Bromomethane	**137**	% Recovery	NA	1	VB09C11A	3/11/2009	3/11/2009	BAG
2-Butanone	**45**	% Recovery	NA	1	VB09C11A	3/11/2009	3/11/2009	BAG
n-Butylbenzene	**76**	% Recovery	NA	1	VB09C11A	3/11/2009	3/11/2009	BAG
sec-Butylbenzene	**80**	% Recovery	NA	1	VB09C11A	3/11/2009	3/11/2009	BAG
tert-Butylbenzene	**86**	% Recovery	NA	1	VB09C11A	3/11/2009	3/11/2009	BAG
Carbon Disulfide	**84**	% Recovery	NA	1	VB09C11A	3/11/2009	3/11/2009	BAG
Carbon Tetrachloride	**88**	% Recovery	NA	1	VB09C11A	3/11/2009	3/11/2009	BAG
Chlorobenzene	**83**	% Recovery	NA	1	VB09C11A	3/11/2009	3/11/2009	BAG
Chloroethane	**92**	% Recovery	NA	1	VB09C11A	3/11/2009	3/11/2009	BAG
Chloroform	**91**	% Recovery	NA	1	VB09C11A	3/11/2009	3/11/2009	BAG
Chloromethane	**101**	% Recovery	NA	1	VB09C11A	3/11/2009	3/11/2009	BAG
2-Chlorotoluene	**84**	% Recovery	NA	1	VB09C11A	3/11/2009	3/11/2009	BAG
Dibromochloromethane	**110**	% Recovery	NA	1	VB09C11A	3/11/2009	3/11/2009	BAG

Analytical Laboratory Report

Client Identification:	**Envirologic Technologies, Inc.**	Sample Matrix:	**Ground Water**
Fibertec Project Number:	**33098**	Sample Number:	**33098-019**

Client Sample Information

Project Identification:	**Kzoo Co**	Client Sample Description:	**GSB-3@7-11' MSD**
Project Number:	**080503**	Client Sample Number:	**19**
Sample Date:	**3/3/2009**	Chain of Custody Number:	**82431**

Comments:

Definitions/ Qualifiers:

A: Spike recovery or precision unusable due to dilution.
B: The analyte was detected in the associated method blank.
E: The analyte was detected at a concentration greater than the calibration range, therefore the result is estimated.
J: The concentration is an estimated value.
U: The analyte was not detected at or above the reporting limit.
X: Matrix Interference has resulted in a raised reporting limit or distorted result.
W: Results reported on a wet-weight basis.
*: Value reported is outside QA limits

Analyte	Result	Units	Report Limit	Dilution Factor	Prep Batch	Prep Date/Time	Analysis Date/Time	Analyst
Plus List (VOCs) (EPA 5030B/EPA 8260B)								
1,2-Dibromo-3-chloropropane	**98**	% Recovery	NA	1	VB09C11A	3/11/2009	3/11/2009	BAG
Dibromomethane	**91**	% Recovery	NA	1	VB09C11A	3/11/2009	3/11/2009	BAG
1,2-Dichlorobenzene	**84**	% Recovery	NA	1	VB09C11A	3/11/2009	3/11/2009	BAG
1,3-Dichlorobenzene	**81**	% Recovery	NA	1	VB09C11A	3/11/2009	3/11/2009	BAG
1,4-Dichlorobenzene	**79**	% Recovery	NA	1	VB09C11A	3/11/2009	3/11/2009	BAG
trans-1,4-Dichloro-2-butene	**49**	% Recovery	NA	1	VB09C11A	3/11/2009	3/11/2009	BAG
Dichlorodifluoromethane	**54**	% Recovery	NA	1	VB09C11A	3/11/2009	3/11/2009	BAG
1,1-Dichloroethane	**92**	% Recovery	NA	1	VB09C11A	3/11/2009	3/11/2009	BAG
1,2-Dichloroethane	**106**	% Recovery	NA	1	VB09C11A	3/11/2009	3/11/2009	BAG
1,1-Dichloroethene	**85**	% Recovery	NA	1	VB09C11A	3/11/2009	3/11/2009	BAG
cis-1,2-Dichloroethene	**88**	% Recovery	NA	1	VB09C11A	3/11/2009	3/11/2009	BAG
trans-1,2-Dichloroethene	**87**	% Recovery	NA	1	VB09C11A	3/11/2009	3/11/2009	BAG
1,2-Dichloropropane	**95**	% Recovery	NA	1	VB09C11A	3/11/2009	3/11/2009	BAG
cis-1,3-Dichloropropene	**99**	% Recovery	NA	1	VB09C11A	3/11/2009	3/11/2009	BAG
trans-1,3-Dichloropropene	**104**	% Recovery	NA	1	VB09C11A	3/11/2009	3/11/2009	BAG
Diethyl Ether	**49**	% Recovery	NA	1	VB09C11A	3/11/2009	3/11/2009	BAG
Ethylbenzene	**84**	% Recovery	NA	1	VB09C11A	3/11/2009	3/11/2009	BAG
Ethylene Dibromide	**88**	% Recovery	NA	1	VB09C11A	3/11/2009	3/11/2009	BAG
Hexachloroethane	**37**	% Recovery	NA	1	VB09C11A	3/11/2009	3/11/2009	BAG
2-Hexanone	**53**	% Recovery	NA	1	VB09C11A	3/11/2009	3/11/2009	BAG

Analytical Laboratory Report

Client Identification:	**Envirologic Technologies, Inc.**	Sample Matrix:	**Ground Water**
Fibertec Project Number:	**33098**	Sample Number:	**33098-019**

Client Sample Information

Project Identification:	**Kzoo Co**	Client Sample Description:	**GSB-3@7-11' MSD**
Project Number:	**080503**	Client Sample Number:	**19**
Sample Date:	**3/3/2009**	Chain of Custody Number:	**82431**

Comments:

Definitions/ Qualifiers:

A: Spike recovery or precision unusable due to dilution.
B: The analyte was detected in the associated method blank.
E: The analyte was detected at a concentration greater than the calibration range, therefore the result is estimated.
J: The concentration is an estimated value.
U: The analyte was not detected at or above the reporting limit.
X: Matrix Interference has resulted in a raised reporting limit or distorted result.
W: Results reported on a wet-weight basis.
*: Value reported is outside QA limits

Analyte	Result	Units	Report Limit	Dilution Factor	Prep Batch	Prep Date/Time	Analysis Date/Time	Analyst
Plus List (VOCs) (EPA 5030B/EPA 8260B)								
Isopropylbenzene	**100**	% Recovery	NA	1	VB09C11A	3/11/2009	3/11/2009	BAG
4-Methyl-2-pentanone	**54**	% Recovery	NA	1	VB09C11A	3/11/2009	3/11/2009	BAG
MTBE	**101**	% Recovery	NA	1	VB09C11A	3/11/2009	3/11/2009	BAG
Methyl Iodide	**107**	% Recovery	NA	1	VB09C11A	3/11/2009	3/11/2009	BAG
Methylene Chloride	**90**	% Recovery	NA	1	VB09C11A	3/11/2009	3/11/2009	BAG
Naphthalene	**90**	% Recovery	NA	1	VB09C11A	3/11/2009	3/11/2009	BAG
n-Propylbenzene	**87**	% Recovery	NA	1	VB09C11A	3/11/2009	3/11/2009	BAG
Styrene	**89**	% Recovery	NA	1	VB09C11A	3/11/2009	3/11/2009	BAG
1,1,1,2-Tetrachloroethane	**98**	% Recovery	NA	1	VB09C11A	3/11/2009	3/11/2009	BAG
1,1,2,2-Tetrachloroethane	**94**	% Recovery	NA	1	VB09C11A	3/11/2009	3/11/2009	BAG
Tetrachloroethene	**75**	% Recovery	NA	1	VB09C11A	3/11/2009	3/11/2009	BAG
Toluene	**85**	% Recovery	NA	1	VB09C11A	3/11/2009	3/11/2009	BAG
1,2,4-Trichlorobenzene	**76**	% Recovery	NA	1	VB09C11A	3/11/2009	3/11/2009	BAG
1,1,1-Trichloroethane	**88**	% Recovery	NA	1	VB09C11A	3/11/2009	3/11/2009	BAG
1,1,2-Trichloroethane	**92**	% Recovery	NA	1	VB09C11A	3/11/2009	3/11/2009	BAG
Trichloroethene	**84**	% Recovery	NA	1	VB09C11A	3/11/2009	3/11/2009	BAG
Trichlorofluoromethane	**69**	% Recovery	NA	1	VB09C11A	3/11/2009	3/11/2009	BAG
1,2,3-Trichloropropane	**88**	% Recovery	NA	1	VB09C11A	3/11/2009	3/11/2009	BAG
1,2,3-Trimethylbenzene	**90**	% Recovery	NA	1	VB09C11A	3/11/2009	3/11/2009	BAG
1,2,4-Trimethylbenzene	**86**	% Recovery	NA	1	VB09C11A	3/11/2009	3/11/2009	BAG

Analytical Laboratory Report

Client Identification:	**Envirologic Technologies, Inc.**	Sample Matrix:	**Ground Water**
Fibertec Project Number:	**33098**	Sample Number:	**33098-019**

Client Sample Information

Project Identification:	**Kzoo Co**	Client Sample Description:	**GSB-3@7-11' MSD**
Project Number:	**080503**	Client Sample Number:	**19**
Sample Date:	**3/3/2009**	Chain of Custody Number:	**82431**

Comments:

Definitions/ Qualifiers:

A: Spike recovery or precision unusable due to dilution.
B: The analyte was detected in the associated method blank.
E: The analyte was detected at a concentration greater than the calibration range, therefore the result is estimated.
J: The concentration is an estimated value.
U: The analyte was not detected at or above the reporting limit.
X: Matrix Interference has resulted in a raised reporting limit or distorted result.
W: Results reported on a wet-weight basis.
*: Value reported is outside QA limits

Analyte	Result	Units	Report Limit	Dilution Factor	Prep Batch	Prep Date/Time	Analysis Date/Time	Analyst
Plus List (VOCs) (EPA 5030B/EPA 8260B)								
1,3,5-Trimethylbenzene	**85**	% Recovery	NA	1	VB09C11A	3/11/2009	3/11/2009	BAG
Vinyl Chloride	**83**	% Recovery	NA	1	VB09C11A	3/11/2009	3/11/2009	BAG
Xylenes	**88**	% Recovery	NA	1	VB09C11A	3/11/2009	3/11/2009	BAG

Analytical Laboratory Report

Client Identification:	**Envirologic Technologies, Inc.**	Sample Matrix:	**Ground Water**
Fibertec Project Number:	**33098**	Sample Number:	**33098-019A**

Client Sample Information

Project Identification:	**Kzoo Co**	Client Sample Description:	**GSB-3@7-11' MSD**
Project Number:	**080503**	Client Sample Number:	**19**
Sample Date:	**3/3/2009**	Chain of Custody Number:	**82431**

Comments:

Definitions/ Qualifiers:

A: Spike recovery or precision unusable due to dilution.
B: The analyte was detected in the associated method blank.
E: The analyte was detected at a concentration greater than the calibration range, therefore the result is estimated.
J: The concentration is an estimated value.
U: The analyte was not detected at or above the reporting limit.
X: Matrix Interference has resulted in a raised reporting limit or distorted result.
W: Results reported on a wet-weight basis.
*: Value reported is outside QA limits

Analyte	Result	Units	Report Limit	Dilution Factor	Prep Batch	Prep Date/Time	Analysis Date/Time	Analyst
Trace Elements by ICP/MS, Dissolved (CODE FF/EPA 6020)								
Aluminum	**105**	% Recovery	NA	1	PT09C11E	3/3/2009	3/13/2009	JLH
Michigan 10 Elements by ICP/MS, Dissolved (CODE FF/EPA 6020)								
Arsenic	**104**	% Recovery	NA	1	PT09C11E	3/3/2009	3/13/2009	JLH
Barium	**97**	% Recovery	NA	1	PT09C11E	3/3/2009	3/13/2009	JLH
Cadmium	**104**	% Recovery	NA	1	PT09C11E	3/3/2009	3/13/2009	JLH
Chromium	**102**	% Recovery	NA	1	PT09C11E	3/3/2009	3/13/2009	JLH
Copper	**97**	% Recovery	NA	1	PT09C11E	3/3/2009	3/13/2009	JLH
Lead	**99**	% Recovery	NA	1	PT09C11E	3/3/2009	3/13/2009	JLH
Selenium	**100**	% Recovery	NA	1	PT09C11E	3/3/2009	3/13/2009	JLH
Silver	**100**	% Recovery	NA	1	PT09C11E	3/3/2009	3/13/2009	JLH
Zinc	**99**	% Recovery	NA	1	PT09C11E	3/3/2009	3/13/2009	JLH
Mercury by CVAAS, Dissolved (EPA 7470A)								
Mercury	**95**	% Recovery	NA	1	PM09C12A	3/12/2009	3/12/2009	ALM

Analytical Laboratory Report

Client Identification:	**Envirologic Technologies, Inc.**	Sample Matrix:	**Ground Water**
Fibertec Project Number:	**33098**	Sample Number:	**33098-019B**

Client Sample Information

Project Identification:	**Kzoo Co**	Client Sample Description:	**GSB-3@7-11' MSD**
Project Number:	**080503**	Client Sample Number:	**19**
Sample Date:	**3/3/2009**	Chain of Custody Number:	**82431**

Comments:

Definitions/ Qualifiers:

A: Spike recovery or precision unusable due to dilution.
B: The analyte was detected in the associated method blank.
E: The analyte was detected at a concentration greater than the calibration range, therefore the result is estimated.
J: The concentration is an estimated value.
U: The analyte was not detected at or above the reporting limit.
X: Matrix Interference has resulted in a raised reporting limit or distorted result.
W: Results reported on a wet-weight basis.
*: Value reported is outside QA limits

Analyte	Result	Units	Report Limit	Dilution Factor	Prep Batch	Prep Date/Time	Analysis Date/Time	Analyst
Polynuclear Aromatic Hydrocarbons (PNAs) (EPA 3535/EPA 8270C)								
Acenaphthene	**67**	% Recovery	NA	1	PS09C10E	3/10/2009	3/12/2009	BDA
Acenaphthylene	**73**	% Recovery	NA	1	PS09C10E	3/10/2009	3/12/2009	BDA
Anthracene	**66**	% Recovery	NA	1	PS09C10E	3/10/2009	3/12/2009	BDA
Benzo(a)anthracene	**55**	% Recovery	NA	1	PS09C10E	3/10/2009	3/12/2009	BDA
Benzo(a)pyrene	**61**	% Recovery	NA	1	PS09C10E	3/10/2009	3/12/2009	BDA
Benzo(b)fluoranthene	**59**	% Recovery	NA	1	PS09C10E	3/10/2009	3/12/2009	BDA
Benzo(ghi)perylene	**52**	% Recovery	NA	1	PS09C10E	3/10/2009	3/12/2009	BDA
Benzo(k)fluoranthene	**68**	% Recovery	NA	1	PS09C10E	3/10/2009	3/12/2009	BDA
Chrysene	**60**	% Recovery	NA	1	PS09C10E	3/10/2009	3/12/2009	BDA
Dibenzo(a,h)anthracene	**50**	% Recovery	NA	1	PS09C10E	3/10/2009	3/12/2009	BDA
Fluoranthene	**66**	% Recovery	NA	1	PS09C10E	3/10/2009	3/12/2009	BDA
Fluorene	**65**	% Recovery	NA	1	PS09C10E	3/10/2009	3/12/2009	BDA
Indeno(1,2,3-cd)pyrene	**49**	% Recovery	NA	1	PS09C10E	3/10/2009	3/12/2009	BDA
2-Methylnaphthalene	**57**	% Recovery	NA	1	PS09C10E	3/10/2009	3/12/2009	BDA
Phenanthrene	**73**	% Recovery	NA	1	PS09C10E	3/10/2009	3/12/2009	BDA
Pyrene	**76**	% Recovery	NA	1	PS09C10E	3/10/2009	3/12/2009	BDA

Analytical Laboratory Report

Client Identification:	**Envirologic Technologies, Inc.**	Sample Matrix:	**Ground Water**
Fibertec Project Number:	**33098**	Sample Number:	**33098-020**

Client Sample Information

Project Identification:	**Kzoo Co**	Client Sample Description:	**DUPLICATE-GROUNDWATER**
Project Number:	**080503**	Client Sample Number:	**20**
Sample Date:	**3/3/2009**	Chain of Custody Number:	**82431**

Comments:

Definitions/ Qualifiers:

A: Spike recovery or precision unusable due to dilution.
B: The analyte was detected in the associated method blank.
E: The analyte was detected at a concentration greater than the calibration range, therefore the result is estimated.
J: The concentration is an estimated value.
U: The analyte was not detected at or above the reporting limit.
X: Matrix Interference has resulted in a raised reporting limit or distorted result.
W: Results reported on a wet-weight basis.
*: Value reported is outside QA limits

Analyte	Result	Units	Report Limit	Dilution Factor	Prep Batch	Prep Date/Time	Analysis Date/Time	Analyst
Plus List (VOCs) (EPA 5030B/EPA 8260B) (Estimated result for trans-1,4-dichloro-2-butene, compound failed low on CCV)								
Acetone	**U**	µg/L	50	1	VB09C10A	3/10/2009	3/10/2009	BAG
Acrylonitrile	**U**	µg/L	2.0	1	VB09C10A	3/10/2009	3/10/2009	BAG
Benzene	**U**	µg/L	1.0	1	VB09C10A	3/10/2009	3/10/2009	BAG
Bromobenzene	**U**	µg/L	1.0	1	VB09C10A	3/10/2009	3/10/2009	BAG
Bromochloromethane	**U**	µg/L	1.0	1	VB09C10A	3/10/2009	3/10/2009	BAG
Bromodichloromethane	**U**	µg/L	1.0	1	VB09C10A	3/10/2009	3/10/2009	BAG
Bromoform	**U**	µg/L	1.0	1	VB09C10A	3/10/2009	3/10/2009	BAG
Bromomethane	**U**	µg/L	5.0	1	VB09C10A	3/10/2009	3/10/2009	BAG
2-Butanone	**U**	µg/L	25	1	VB09C10A	3/10/2009	3/10/2009	BAG
n-Butylbenzene	**U**	µg/L	1.0	1	VB09C10A	3/10/2009	3/10/2009	BAG
sec-Butylbenzene	**U**	µg/L	1.0	1	VB09C10A	3/10/2009	3/10/2009	BAG
tert-Butylbenzene	**U**	µg/L	1.0	1	VB09C10A	3/10/2009	3/10/2009	BAG
Carbon Disulfide	**U**	µg/L	5.0	1	VB09C10A	3/10/2009	3/10/2009	BAG
Carbon Tetrachloride	**U**	µg/L	1.0	1	VB09C10A	3/10/2009	3/10/2009	BAG
Chlorobenzene	**U**	µg/L	1.0	1	VB09C10A	3/10/2009	3/10/2009	BAG
Chloroethane	**U**	µg/L	5.0	1	VB09C10A	3/10/2009	3/10/2009	BAG
Chloroform	**U**	µg/L	1.0	1	VB09C10A	3/10/2009	3/10/2009	BAG
Chloromethane	**U**	µg/L	5.0	1	VB09C10A	3/10/2009	3/10/2009	BAG
2-Chlorotoluene	**U**	µg/L	5.0	1	VB09C10A	3/10/2009	3/10/2009	BAG
Dibromochloromethane	**U**	µg/L	5.0	1	VB09C10A	3/10/2009	3/10/2009	BAG

Analytical Laboratory Report

Client Identification:	**Envirologic Technologies, Inc.**	Sample Matrix:	**Ground Water**
Fibertec Project Number:	**33098**	Sample Number:	**33098-020**

Client Sample Information

Project Identification:	**Kzoo Co**	Client Sample Description:	**DUPLICATE-GROUNDWATER**
Project Number:	**080503**	Client Sample Number:	**20**
Sample Date:	**3/3/2009**	Chain of Custody Number:	**82431**

Comments:

Definitions/ Qualifiers:

A: Spike recovery or precision unusable due to dilution.
B: The analyte was detected in the associated method blank.
E: The analyte was detected at a concentration greater than the calibration range, therefore the result is estimated.
J: The concentration is an estimated value.
U: The analyte was not detected at or above the reporting limit.
X: Matrix Interference has resulted in a raised reporting limit or distorted result.
W: Results reported on a wet-weight basis.
*: Value reported is outside QA limits

Analyte	Result	Units	Report Limit	Dilution Factor	Prep Batch	Prep Date/Time	Analysis Date/Time	Analyst
Plus List (VOCs) (EPA 5030B/EPA 8260B) (Estimated result for trans-1,4-dichloro-2-butene, compound failed low on CCV)								
1,2-Dibromo-3-chloropropane	**U**	µg/L	1.0	1	VB09C10A	3/10/2009	3/10/2009	BAG
Dibromomethane	**U**	µg/L	5.0	1	VB09C10A	3/10/2009	3/10/2009	BAG
1,2-Dichlorobenzene	**U**	µg/L	1.0	1	VB09C10A	3/10/2009	3/10/2009	BAG
1,3-Dichlorobenzene	**U**	µg/L	1.0	1	VB09C10A	3/10/2009	3/10/2009	BAG
1,4-Dichlorobenzene	**U**	µg/L	1.0	1	VB09C10A	3/10/2009	3/10/2009	BAG
trans-1,4-Dichloro-2-butene	**U**	µg/L	1.0	1	VB09C10A	3/10/2009	3/10/2009	BAG
Dichlorodifluoromethane	**U**	µg/L	5.0	1	VB09C10A	3/10/2009	3/10/2009	BAG
1,1-Dichloroethane	**U**	µg/L	1.0	1	VB09C10A	3/10/2009	3/10/2009	BAG
1,2-Dichloroethane	**U**	µg/L	1.0	1	VB09C10A	3/10/2009	3/10/2009	BAG
1,1-Dichloroethene	**U**	µg/L	1.0	1	VB09C10A	3/10/2009	3/10/2009	BAG
cis-1,2-Dichloroethene	**12**	µg/L	1.0	1	VB09C10A	3/10/2009	3/10/2009	BAG
trans-1,2-Dichloroethene	**U**	µg/L	1.0	1	VB09C10A	3/10/2009	3/10/2009	BAG
1,2-Dichloropropane	**U**	µg/L	1.0	1	VB09C10A	3/10/2009	3/10/2009	BAG
cis-1,3-Dichloropropene	**U**	µg/L	1.0	1	VB09C10A	3/10/2009	3/10/2009	BAG
trans-1,3-Dichloropropene	**U**	µg/L	1.0	1	VB09C10A	3/10/2009	3/10/2009	BAG
Diethyl Ether	**U**	µg/L	10	1	VB09C10A	3/10/2009	3/10/2009	BAG
Ethylbenzene	**U**	µg/L	1.0	1	VB09C10A	3/10/2009	3/10/2009	BAG
Ethylene Dibromide	**U**	µg/L	1.0	1	VB09C10A	3/10/2009	3/10/2009	BAG
Hexachloroethane	**U**	µg/L	2.0	1	VB09C10A	3/10/2009	3/10/2009	BAG
2-Hexanone	**U**	µg/L	50	1	VB09C10A	3/10/2009	3/10/2009	BAG

Analytical Laboratory Report

Client Identification:	**Envirologic Technologies, Inc.**	Sample Matrix:	**Ground Water**
Fibertec Project Number:	**33098**	Sample Number:	**33098-020**

Client Sample Information

Project Identification:	**Kzoo Co**	Client Sample Description:	**DUPLICATE-GROUNDWATER**
Project Number:	**080503**	Client Sample Number:	**20**
Sample Date:	**3/3/2009**	Chain of Custody Number:	**82431**

Comments:

Definitions/ Qualifiers:

A: Spike recovery or precision unusable due to dilution.
B: The analyte was detected in the associated method blank.
E: The analyte was detected at a concentration greater than the calibration range, therefore the result is estimated.
J: The concentration is an estimated value.
U: The analyte was not detected at or above the reporting limit.
X: Matrix Interference has resulted in a raised reporting limit or distorted result.
W: Results reported on a wet-weight basis.
*: Value reported is outside QA limits

Analyte	Result	Units	Report Limit	Dilution Factor	Prep Batch	Prep Date/Time	Analysis Date/Time	Analyst
Plus List (VOCs) (EPA 5030B/EPA 8260B) (Estimated result for trans-1,4-dichloro-2-butene, compound failed low on CCV)								
Isopropylbenzene	**U**	µg/L	5.0	1	VB09C10A	3/10/2009	3/10/2009	BAG
4-Methyl-2-pentanone	**U**	µg/L	50	1	VB09C10A	3/10/2009	3/10/2009	BAG
MTBE	**U**	µg/L	5.0	1	VB09C10A	3/10/2009	3/10/2009	BAG
Methyl Iodide	**U**	µg/L	1.0	1	VB09C10A	3/10/2009	3/10/2009	BAG
Methylene Chloride	**U**	µg/L	5.0	1	VB09C10A	3/10/2009	3/10/2009	BAG
Naphthalene	**U**	µg/L	5.0	1	VB09C10A	3/10/2009	3/10/2009	BAG
n-Propylbenzene	**U**	µg/L	1.0	1	VB09C10A	3/10/2009	3/10/2009	BAG
Styrene	**U**	µg/L	1.0	1	VB09C10A	3/10/2009	3/10/2009	BAG
1,1,1,2-Tetrachloroethane	**U**	µg/L	1.0	1	VB09C10A	3/10/2009	3/10/2009	BAG
1,1,2,2-Tetrachloroethane	**U**	µg/L	1.0	1	VB09C10A	3/10/2009	3/10/2009	BAG
Tetrachloroethene	**U**	µg/L	1.0	1	VB09C10A	3/10/2009	3/10/2009	BAG
Toluene	**U**	µg/L	1.0	1	VB09C10A	3/10/2009	3/10/2009	BAG
1,2,4-Trichlorobenzene	**U**	µg/L	5.0	1	VB09C10A	3/10/2009	3/10/2009	BAG
1,1,1-Trichloroethane	**U**	µg/L	1.0	1	VB09C10A	3/10/2009	3/10/2009	BAG
1,1,2-Trichloroethane	**U**	µg/L	1.0	1	VB09C10A	3/10/2009	3/10/2009	BAG
Trichloroethene	**U**	µg/L	1.0	1	VB09C10A	3/10/2009	3/10/2009	BAG
Trichlorofluoromethane	**U**	µg/L	1.0	1	VB09C10A	3/10/2009	3/10/2009	BAG
1,2,3-Trichloropropane	**U**	µg/L	1.0	1	VB09C10A	3/10/2009	3/10/2009	BAG
1,2,3-Trimethylbenzene	**U**	µg/L	1.0	1	VB09C10A	3/10/2009	3/10/2009	BAG
1,2,4-Trimethylbenzene	**U**	µg/L	1.0	1	VB09C10A	3/10/2009	3/10/2009	BAG

Analytical Laboratory Report

Client Identification:	**Envirologic Technologies, Inc.**	Sample Matrix:	**Ground Water**
Fibertec Project Number:	**33098**	Sample Number:	**33098-020**

Client Sample Information

Project Identification:	**Kzoo Co**	Client Sample Description:	**DUPLICATE-GROUNDWATER**
Project Number:	**080503**	Client Sample Number:	**20**
Sample Date:	**3/3/2009**	Chain of Custody Number:	**82431**

Comments:

Definitions/ Qualifiers:

A: Spike recovery or precision unusable due to dilution.
B: The analyte was detected in the associated method blank.
E: The analyte was detected at a concentration greater than the calibration range, therefore the result is estimated.
J: The concentration is an estimated value.
U: The analyte was not detected at or above the reporting limit.
X: Matrix Interference has resulted in a raised reporting limit or distorted result.
W: Results reported on a wet-weight basis.
*: Value reported is outside QA limits

Analyte	Result	Units	Report Limit	Dilution Factor	Prep Batch	Prep Date/Time	Analysis Date/Time	Analyst
Plus List (VOCs) (EPA 5030B/EPA 8260B) (Estimated result for trans-1,4-dichloro-2-butene, compound failed low on CCV)								
1,3,5-Trimethylbenzene	**U**	µg/L	1.0	1	VB09C10A	3/10/2009	3/10/2009	BAG
Vinyl Chloride	**2.5**	µg/L	1.0	1	VB09C10A	3/10/2009	3/10/2009	BAG
Xylenes	**U**	µg/L	3.0	1	VB09C10A	3/10/2009	3/10/2009	BAG

Analytical Laboratory Report

Client Identification:	**Envirologic Technologies, Inc.**	Sample Matrix:	**Ground Water**
Fibertec Project Number:	**33098**	Sample Number:	**33098-020A**

Client Sample Information

Project Identification:	**Kzoo Co**	Client Sample Description:	**DUPLICATE-GROUNDWATER**
Project Number:	**080503**	Client Sample Number:	**20**
Sample Date:	**3/3/2009**	Chain of Custody Number:	**82431**

Comments:

Definitions/ Qualifiers:

A: Spike recovery or precision unusable due to dilution.
B: The analyte was detected in the associated method blank.
E: The analyte was detected at a concentration greater than the calibration range, therefore the result is estimated.
J: The concentration is an estimated value.
U: The analyte was not detected at or above the reporting limit.
X: Matrix Interference has resulted in a raised reporting limit or distorted result.
W: Results reported on a wet-weight basis.
*: Value reported is outside QA limits

Analyte	Result	Units	Report Limit	Dilution Factor	Prep Batch	Prep Date/Time	Analysis Date/Time	Analyst
Trace Elements by ICP/MS, Dissolved (CODE FF/EPA 6020)								
Aluminum	**U**	µg/L	50	1	PT09C11E	3/3/2009	3/13/2009	JLH
Michigan 10 Elements by ICP/MS, Dissolved (CODE FF/EPA 6020)								
Arsenic	**29**	µg/L	5.0	1	PT09C11E	3/3/2009	3/13/2009	JLH
Barium	**220**	µg/L	100	1	PT09C11E	3/3/2009	3/13/2009	JLH
Cadmium	**U**	µg/L	1.0	1	PT09C11E	3/3/2009	3/13/2009	JLH
Chromium	**U**	µg/L	10	1	PT09C11E	3/3/2009	3/13/2009	JLH
Copper	**U**	µg/L	4.0	1	PT09C11E	3/3/2009	3/13/2009	JLH
Lead	**U**	µg/L	3.0	1	PT09C11E	3/3/2009	3/13/2009	JLH
Selenium	**U**	µg/L	5.0	1	PT09C11E	3/3/2009	3/13/2009	JLH
Silver	**U**	µg/L	0.20	1	PT09C11E	3/3/2009	3/13/2009	JLH
Zinc	**U**	µg/L	50	1	PT09C11E	3/3/2009	3/13/2009	JLH
Mercury by CVAAS, Dissolved (EPA 7470A)								
Mercury	**U**	µg/L	0.20	1	PM09C12A	3/12/2009	3/12/2009	ALM

Analytical Laboratory Report

Client Identification:	**Envirologic Technologies, Inc.**	Sample Matrix:	**Ground Water**
Fibertec Project Number:	**33098**	Sample Number:	**33098-020B**

Client Sample Information

Project Identification:	**Kzoo Co**	Client Sample Description:	**DUPLICATE-GROUNDWATER**
Project Number:	**080503**	Client Sample Number:	**20**
Sample Date:	**3/3/2009**	Chain of Custody Number:	**82431**

Comments:

Definitions/ Qualifiers:

A: Spike recovery or precision unusable due to dilution.
B: The analyte was detected in the associated method blank.
E: The analyte was detected at a concentration greater than the calibration range, therefore the result is estimated.
J: The concentration is an estimated value.
U: The analyte was not detected at or above the reporting limit.
X: Matrix Interference has resulted in a raised reporting limit or distorted result.
W: Results reported on a wet-weight basis.
*: Value reported is outside QA limits

Analyte	Result	Units	Report Limit	Dilution Factor	Prep Batch	Prep Date/Time	Analysis Date/Time	Analyst
Polynuclear Aromatic Hydrocarbons (PNAs) (EPA 3535/EPA 8270C)								
Acenaphthene	**U**	µg/L	5.0	1	PS09C10E	3/10/2009	3/12/2009	BDA
Acenaphthylene	**U**	µg/L	5.0	1	PS09C10E	3/10/2009	3/12/2009	BDA
Anthracene	**U**	µg/L	5.0	1	PS09C10E	3/10/2009	3/12/2009	BDA
Benzo(a)anthracene	**U**	µg/L	1.0	1	PS09C10E	3/10/2009	3/12/2009	BDA
Benzo(a)pyrene	**U**	µg/L	1.0	1	PS09C10E	3/10/2009	3/12/2009	BDA
Benzo(b)fluoranthene	**U**	µg/L	1.0	1	PS09C10E	3/10/2009	3/12/2009	BDA
Benzo(ghi)perylene	**U**	µg/L	1.0	1	PS09C10E	3/10/2009	3/12/2009	BDA
Benzo(k)fluoranthene	**U**	µg/L	1.0	1	PS09C10E	3/10/2009	3/12/2009	BDA
Chrysene	**U**	µg/L	1.0	1	PS09C10E	3/10/2009	3/12/2009	BDA
Dibenzo(a,h)anthracene	**U**	µg/L	2.0	1	PS09C10E	3/10/2009	3/12/2009	BDA
Fluoranthene	**U**	µg/L	1.0	1	PS09C10E	3/10/2009	3/12/2009	BDA
Fluorene	**U**	µg/L	5.0	1	PS09C10E	3/10/2009	3/12/2009	BDA
Indeno(1,2,3-cd)pyrene	**U**	µg/L	2.0	1	PS09C10E	3/10/2009	3/12/2009	BDA
2-Methylnaphthalene	**U**	µg/L	5.0	1	PS09C10E	3/10/2009	3/12/2009	BDA
Phenanthrene	**U**	µg/L	2.0	1	PS09C10E	3/10/2009	3/12/2009	BDA
Pyrene	**U**	µg/L	5.0	1	PS09C10E	3/10/2009	3/12/2009	BDA

Analytical Laboratory Report

Client Identification:	**Envirologic Technologies, Inc.**	Sample Matrix:	**Ground Water**
Fibertec Project Number:	**33098**	Sample Number:	**33098-021**

Client Sample Information

Project Identification:	**Kzoo Co**	Client Sample Description:	**EB-GROUNDWATER**
Project Number:	**080503**	Client Sample Number:	**21**
Sample Date:	**3/3/2009**	Chain of Custody Number:	**82431**

Comments:

Definitions/ Qualifiers:

A: Spike recovery or precision unusable due to dilution.
B: The analyte was detected in the associated method blank.
E: The analyte was detected at a concentration greater than the calibration range, therefore the result is estimated.
J: The concentration is an estimated value.
U: The analyte was not detected at or above the reporting limit.
X: Matrix Interference has resulted in a raised reporting limit or distorted result.
W: Results reported on a wet-weight basis.
*: Value reported is outside QA limits

Analyte	Result	Units	Report Limit	Dilution Factor	Prep Batch	Prep Date/Time	Analysis Date/Time	Analyst
Plus List (VOCs) (EPA 5030B/EPA 8260B) (Estimated result for trans-1,4-dichloro-2-butene, compound failed low on CCV)								
Acetone	**U**	µg/L	50	1	VB09C10A	3/10/2009	3/10/2009	BAG
Acrylonitrile	**U**	µg/L	2.0	1	VB09C10A	3/10/2009	3/10/2009	BAG
Benzene	**U**	µg/L	1.0	1	VB09C10A	3/10/2009	3/10/2009	BAG
Bromobenzene	**U**	µg/L	1.0	1	VB09C10A	3/10/2009	3/10/2009	BAG
Bromochloromethane	**U**	µg/L	1.0	1	VB09C10A	3/10/2009	3/10/2009	BAG
Bromodichloromethane	**U**	µg/L	1.0	1	VB09C10A	3/10/2009	3/10/2009	BAG
Bromoform	**U**	µg/L	1.0	1	VB09C10A	3/10/2009	3/10/2009	BAG
Bromomethane	**U**	µg/L	5.0	1	VB09C10A	3/10/2009	3/10/2009	BAG
2-Butanone	**U**	µg/L	25	1	VB09C10A	3/10/2009	3/10/2009	BAG
n-Butylbenzene	**U**	µg/L	1.0	1	VB09C10A	3/10/2009	3/10/2009	BAG
sec-Butylbenzene	**U**	µg/L	1.0	1	VB09C10A	3/10/2009	3/10/2009	BAG
tert-Butylbenzene	**U**	µg/L	1.0	1	VB09C10A	3/10/2009	3/10/2009	BAG
Carbon Disulfide	**U**	µg/L	5.0	1	VB09C10A	3/10/2009	3/10/2009	BAG
Carbon Tetrachloride	**U**	µg/L	1.0	1	VB09C10A	3/10/2009	3/10/2009	BAG
Chlorobenzene	**U**	µg/L	1.0	1	VB09C10A	3/10/2009	3/10/2009	BAG
Chloroethane	**U**	µg/L	5.0	1	VB09C10A	3/10/2009	3/10/2009	BAG
Chloroform	**U**	µg/L	1.0	1	VB09C10A	3/10/2009	3/10/2009	BAG
Chloromethane	**U**	µg/L	5.0	1	VB09C10A	3/10/2009	3/10/2009	BAG
2-Chlorotoluene	**U**	µg/L	5.0	1	VB09C10A	3/10/2009	3/10/2009	BAG
Dibromochloromethane	**U**	µg/L	5.0	1	VB09C10A	3/10/2009	3/10/2009	BAG

Analytical Laboratory Report

Client Identification:	**Envirologic Technologies, Inc.**	Sample Matrix:	**Ground Water**
Fibertec Project Number:	**33098**	Sample Number:	**33098-021**

Client Sample Information

Project Identification:	**Kzoo Co**	Client Sample Description:	**EB-GROUNDWATER**
Project Number:	**080503**	Client Sample Number:	**21**
Sample Date:	**3/3/2009**	Chain of Custody Number:	**82431**

Comments:

Definitions/ Qualifiers:

A: Spike recovery or precision unusable due to dilution.
B: The analyte was detected in the associated method blank.
E: The analyte was detected at a concentration greater than the calibration range, therefore the result is estimated.
J: The concentration is an estimated value.
U: The analyte was not detected at or above the reporting limit.
X: Matrix Interference has resulted in a raised reporting limit or distorted result.
W: Results reported on a wet-weight basis.
*: Value reported is outside QA limits

Analyte	Result	Units	Report Limit	Dilution Factor	Prep Batch	Prep Date/Time	Analysis Date/Time	Analyst
Plus List (VOCs) (EPA 5030B/EPA 8260B) (Estimated result for trans-1,4-dichloro-2-butene, compound failed low on CCV)								
1,2-Dibromo-3-chloropropane	**U**	µg/L	1.0	1	VB09C10A	3/10/2009	3/10/2009	BAG
Dibromomethane	**U**	µg/L	5.0	1	VB09C10A	3/10/2009	3/10/2009	BAG
1,2-Dichlorobenzene	**U**	µg/L	1.0	1	VB09C10A	3/10/2009	3/10/2009	BAG
1,3-Dichlorobenzene	**U**	µg/L	1.0	1	VB09C10A	3/10/2009	3/10/2009	BAG
1,4-Dichlorobenzene	**U**	µg/L	1.0	1	VB09C10A	3/10/2009	3/10/2009	BAG
trans-1,4-Dichloro-2-butene	**U**	µg/L	1.0	1	VB09C10A	3/10/2009	3/10/2009	BAG
Dichlorodifluoromethane	**U**	µg/L	5.0	1	VB09C10A	3/10/2009	3/10/2009	BAG
1,1-Dichloroethane	**U**	µg/L	1.0	1	VB09C10A	3/10/2009	3/10/2009	BAG
1,2-Dichloroethane	**U**	µg/L	1.0	1	VB09C10A	3/10/2009	3/10/2009	BAG
1,1-Dichloroethene	**U**	µg/L	1.0	1	VB09C10A	3/10/2009	3/10/2009	BAG
cis-1,2-Dichloroethene	**U**	µg/L	1.0	1	VB09C10A	3/10/2009	3/10/2009	BAG
trans-1,2-Dichloroethene	**U**	µg/L	1.0	1	VB09C10A	3/10/2009	3/10/2009	BAG
1,2-Dichloropropane	**U**	µg/L	1.0	1	VB09C10A	3/10/2009	3/10/2009	BAG
cis-1,3-Dichloropropene	**U**	µg/L	1.0	1	VB09C10A	3/10/2009	3/10/2009	BAG
trans-1,3-Dichloropropene	**U**	µg/L	1.0	1	VB09C10A	3/10/2009	3/10/2009	BAG
Diethyl Ether	**U**	µg/L	10	1	VB09C10A	3/10/2009	3/10/2009	BAG
Ethylbenzene	**U**	µg/L	1.0	1	VB09C10A	3/10/2009	3/10/2009	BAG
Ethylene Dibromide	**U**	µg/L	1.0	1	VB09C10A	3/10/2009	3/10/2009	BAG
Hexachloroethane	**U**	µg/L	2.0	1	VB09C10A	3/10/2009	3/10/2009	BAG
2-Hexanone	**U**	µg/L	50	1	VB09C10A	3/10/2009	3/10/2009	BAG

Analytical Laboratory Report

Client Identification:	**Envirologic Technologies, Inc.**	Sample Matrix:	**Ground Water**
Fibertec Project Number:	**33098**	Sample Number:	**33098-021**

Client Sample Information

Project Identification:	**Kzoo Co**	Client Sample Description:	**EB-GROUNDWATER**
Project Number:	**080503**	Client Sample Number:	**21**
Sample Date:	**3/3/2009**	Chain of Custody Number:	**82431**

Comments:

Definitions/ Qualifiers:

A: Spike recovery or precision unusable due to dilution.
B: The analyte was detected in the associated method blank.
E: The analyte was detected at a concentration greater than the calibration range, therefore the result is estimated.
J: The concentration is an estimated value.
U: The analyte was not detected at or above the reporting limit.
X: Matrix Interference has resulted in a raised reporting limit or distorted result.
W: Results reported on a wet-weight basis.
*: Value reported is outside QA limits

Analyte	Result	Units	Report Limit	Dilution Factor	Prep Batch	Prep Date/Time	Analysis Date/Time	Analyst
Plus List (VOCs) (EPA 5030B/EPA 8260B) (Estimated result for trans-1,4-dichloro-2-butene, compound failed low on CCV)								
Isopropylbenzene	**U**	µg/L	5.0	1	VB09C10A	3/10/2009	3/10/2009	BAG
4-Methyl-2-pentanone	**U**	µg/L	50	1	VB09C10A	3/10/2009	3/10/2009	BAG
MTBE	**U**	µg/L	5.0	1	VB09C10A	3/10/2009	3/10/2009	BAG
Methyl Iodide	**U**	µg/L	1.0	1	VB09C10A	3/10/2009	3/10/2009	BAG
Methylene Chloride	**U**	µg/L	5.0	1	VB09C10A	3/10/2009	3/10/2009	BAG
2-Methylnaphthalene	**U**	µg/L	5.0	1	VB09C10A	3/10/2009	3/10/2009	BAG
Naphthalene	**U**	µg/L	5.0	1	VB09C10A	3/10/2009	3/10/2009	BAG
n-Propylbenzene	**U**	µg/L	1.0	1	VB09C10A	3/10/2009	3/10/2009	BAG
Styrene	**U**	µg/L	1.0	1	VB09C10A	3/10/2009	3/10/2009	BAG
1,1,1,2-Tetrachloroethane	**U**	µg/L	1.0	1	VB09C10A	3/10/2009	3/10/2009	BAG
1,1,2,2-Tetrachloroethane	**U**	µg/L	1.0	1	VB09C10A	3/10/2009	3/10/2009	BAG
Tetrachloroethene	**U**	µg/L	1.0	1	VB09C10A	3/10/2009	3/10/2009	BAG
Toluene	**U**	µg/L	1.0	1	VB09C10A	3/10/2009	3/10/2009	BAG
1,2,4-Trichlorobenzene	**U**	µg/L	5.0	1	VB09C10A	3/10/2009	3/10/2009	BAG
1,1,1-Trichloroethane	**U**	µg/L	1.0	1	VB09C10A	3/10/2009	3/10/2009	BAG
1,1,2-Trichloroethane	**U**	µg/L	1.0	1	VB09C10A	3/10/2009	3/10/2009	BAG
Trichloroethene	**U**	µg/L	1.0	1	VB09C10A	3/10/2009	3/10/2009	BAG
Trichlorofluoromethane	**U**	µg/L	1.0	1	VB09C10A	3/10/2009	3/10/2009	BAG
1,2,3-Trichloropropane	**U**	µg/L	1.0	1	VB09C10A	3/10/2009	3/10/2009	BAG
1,2,3-Trimethylbenzene	**U**	µg/L	1.0	1	VB09C10A	3/10/2009	3/10/2009	BAG

Analytical Laboratory Report

Client Identification:	**Envirologic Technologies, Inc.**	Sample Matrix:	**Ground Water**
Fibertec Project Number:	**33098**	Sample Number:	**33098-021**

Client Sample Information

Project Identification:	**Kzoo Co**	Client Sample Description:	**EB-GROUNDWATER**
Project Number:	**080503**	Client Sample Number:	**21**
Sample Date:	**3/3/2009**	Chain of Custody Number:	**82431**

Comments:

Definitions/ Qualifiers:

A: Spike recovery or precision unusable due to dilution.
B: The analyte was detected in the associated method blank.
E: The analyte was detected at a concentration greater than the calibration range, therefore the result is estimated.
J: The concentration is an estimated value.
U: The analyte was not detected at or above the reporting limit.
X: Matrix Interference has resulted in a raised reporting limit or distorted result.
W: Results reported on a wet-weight basis.
*: Value reported is outside QA limits

Analyte	Result	Units	Report Limit	Dilution Factor	Prep Batch	Prep Date/Time	Analysis Date/Time	Analyst
Plus List (VOCs) (EPA 5030B/EPA 8260B) (Estimated result for trans-1,4-dichloro-2-butene, compound failed low on CCV)								
1,2,4-Trimethylbenzene	**U**	µg/L	1.0	1	VB09C10A	3/10/2009	3/10/2009	BAG
1,3,5-Trimethylbenzene	**U**	µg/L	1.0	1	VB09C10A	3/10/2009	3/10/2009	BAG
Vinyl Chloride	**U**	µg/L	1.0	1	VB09C10A	3/10/2009	3/10/2009	BAG
Xylenes	**U**	µg/L	3.0	1	VB09C10A	3/10/2009	3/10/2009	BAG

Analytical Laboratory Report

Client Identification:	**Envirologic Technologies, Inc.**	Sample Matrix:	**Ground Water**
Fibertec Project Number:	**33098**	Sample Number:	**33098-022**

Client Sample Information

Project Identification:	**Kzoo Co**	Client Sample Description:	**TRIP BLANK**
Project Number:	**080503**	Client Sample Number:	**22**
Sample Date:	**3/3/2009**	Chain of Custody Number:	**82431**

Comments:

Definitions/ Qualifiers:

A: Spike recovery or precision unusable due to dilution.
B: The analyte was detected in the associated method blank.
E: The analyte was detected at a concentration greater than the calibration range, therefore the result is estimated.
J: The concentration is an estimated value.
U: The analyte was not detected at or above the reporting limit.
X: Matrix Interference has resulted in a raised reporting limit or distorted result.
W: Results reported on a wet-weight basis.
*: Value reported is outside QA limits

Analyte	Result	Units	Report Limit	Dilution Factor	Prep Batch	Prep Date/Time	Analysis Date/Time	Analyst
Plus List (VOCs) (EPA 5030B/EPA 8260B) (Estimated result for trans-1,4-dichloro-2-butene, compound failed low on CCV)								
Acetone	**U**	µg/L	50	1	VB09C10A	3/10/2009	3/10/2009	BAG
Acrylonitrile	**U**	µg/L	2.0	1	VB09C10A	3/10/2009	3/10/2009	BAG
Benzene	**U**	µg/L	1.0	1	VB09C10A	3/10/2009	3/10/2009	BAG
Bromobenzene	**U**	µg/L	1.0	1	VB09C10A	3/10/2009	3/10/2009	BAG
Bromochloromethane	**U**	µg/L	1.0	1	VB09C10A	3/10/2009	3/10/2009	BAG
Bromodichloromethane	**U**	µg/L	1.0	1	VB09C10A	3/10/2009	3/10/2009	BAG
Bromoform	**U**	µg/L	1.0	1	VB09C10A	3/10/2009	3/10/2009	BAG
Bromomethane	**U**	µg/L	5.0	1	VB09C10A	3/10/2009	3/10/2009	BAG
2-Butanone	**U**	µg/L	25	1	VB09C10A	3/10/2009	3/10/2009	BAG
n-Butylbenzene	**U**	µg/L	1.0	1	VB09C10A	3/10/2009	3/10/2009	BAG
sec-Butylbenzene	**U**	µg/L	1.0	1	VB09C10A	3/10/2009	3/10/2009	BAG
tert-Butylbenzene	**U**	µg/L	1.0	1	VB09C10A	3/10/2009	3/10/2009	BAG
Carbon Disulfide	**U**	µg/L	5.0	1	VB09C10A	3/10/2009	3/10/2009	BAG
Carbon Tetrachloride	**U**	µg/L	1.0	1	VB09C10A	3/10/2009	3/10/2009	BAG
Chlorobenzene	**U**	µg/L	1.0	1	VB09C10A	3/10/2009	3/10/2009	BAG
Chloroethane	**U**	µg/L	5.0	1	VB09C10A	3/10/2009	3/10/2009	BAG
Chloroform	**U**	µg/L	1.0	1	VB09C10A	3/10/2009	3/10/2009	BAG
Chloromethane	**U**	µg/L	5.0	1	VB09C10A	3/10/2009	3/10/2009	BAG
2-Chlorotoluene	**U**	µg/L	5.0	1	VB09C10A	3/10/2009	3/10/2009	BAG
Dibromochloromethane	**U**	µg/L	5.0	1	VB09C10A	3/10/2009	3/10/2009	BAG

Analytical Laboratory Report

Client Identification:	**Envirologic Technologies, Inc.**	Sample Matrix:	**Ground Water**
Fibertec Project Number:	**33098**	Sample Number:	**33098-022**

Client Sample Information

Project Identification:	**Kzoo Co**	Client Sample Description:	**TRIP BLANK**
Project Number:	**080503**	Client Sample Number:	**22**
Sample Date:	**3/3/2009**	Chain of Custody Number:	**82431**

Comments:

Definitions/ Qualifiers:

A: Spike recovery or precision unusable due to dilution.
B: The analyte was detected in the associated method blank.
E: The analyte was detected at a concentration greater than the calibration range, therefore the result is estimated.
J: The concentration is an estimated value.
U: The analyte was not detected at or above the reporting limit.
X: Matrix Interference has resulted in a raised reporting limit or distorted result.
W: Results reported on a wet-weight basis.
*: Value reported is outside QA limits

Analyte	Result	Units	Report Limit	Dilution Factor	Prep Batch	Prep Date/Time	Analysis Date/Time	Analyst
Plus List (VOCs) (EPA 5030B/EPA 8260B) (Estimated result for trans-1,4-dichloro-2-butene, compound failed low on CCV)								
1,2-Dibromo-3-chloropropane	**U**	µg/L	1.0	1	VB09C10A	3/10/2009	3/10/2009	BAG
Dibromomethane	**U**	µg/L	5.0	1	VB09C10A	3/10/2009	3/10/2009	BAG
1,2-Dichlorobenzene	**U**	µg/L	1.0	1	VB09C10A	3/10/2009	3/10/2009	BAG
1,3-Dichlorobenzene	**U**	µg/L	1.0	1	VB09C10A	3/10/2009	3/10/2009	BAG
1,4-Dichlorobenzene	**U**	µg/L	1.0	1	VB09C10A	3/10/2009	3/10/2009	BAG
trans-1,4-Dichloro-2-butene	**U**	µg/L	1.0	1	VB09C10A	3/10/2009	3/10/2009	BAG
Dichlorodifluoromethane	**U**	µg/L	5.0	1	VB09C10A	3/10/2009	3/10/2009	BAG
1,1-Dichloroethane	**U**	µg/L	1.0	1	VB09C10A	3/10/2009	3/10/2009	BAG
1,2-Dichloroethane	**U**	µg/L	1.0	1	VB09C10A	3/10/2009	3/10/2009	BAG
1,1-Dichloroethene	**U**	µg/L	1.0	1	VB09C10A	3/10/2009	3/10/2009	BAG
cis-1,2-Dichloroethene	**U**	µg/L	1.0	1	VB09C10A	3/10/2009	3/10/2009	BAG
trans-1,2-Dichloroethene	**U**	µg/L	1.0	1	VB09C10A	3/10/2009	3/10/2009	BAG
1,2-Dichloropropane	**U**	µg/L	1.0	1	VB09C10A	3/10/2009	3/10/2009	BAG
cis-1,3-Dichloropropene	**U**	µg/L	1.0	1	VB09C10A	3/10/2009	3/10/2009	BAG
trans-1,3-Dichloropropene	**U**	µg/L	1.0	1	VB09C10A	3/10/2009	3/10/2009	BAG
Diethyl Ether	**U**	µg/L	10	1	VB09C10A	3/10/2009	3/10/2009	BAG
Ethylbenzene	**U**	µg/L	1.0	1	VB09C10A	3/10/2009	3/10/2009	BAG
Ethylene Dibromide	**U**	µg/L	1.0	1	VB09C10A	3/10/2009	3/10/2009	BAG
Hexachloroethane	**U**	µg/L	2.0	1	VB09C10A	3/10/2009	3/10/2009	BAG
2-Hexanone	**U**	µg/L	50	1	VB09C10A	3/10/2009	3/10/2009	BAG

Analytical Laboratory Report

Client Identification:	**Envirologic Technologies, Inc.**	Sample Matrix:	**Ground Water**
Fibertec Project Number:	**33098**	Sample Number:	**33098-022**

Client Sample Information

Project Identification:	**Kzoo Co**	Client Sample Description:	**TRIP BLANK**
Project Number:	**080503**	Client Sample Number:	**22**
Sample Date:	**3/3/2009**	Chain of Custody Number:	**82431**

Comments:

Definitions/ Qualifiers:

A: Spike recovery or precision unusable due to dilution.
B: The analyte was detected in the associated method blank.
E: The analyte was detected at a concentration greater than the calibration range, therefore the result is estimated.
J: The concentration is an estimated value.
U: The analyte was not detected at or above the reporting limit.
X: Matrix Interference has resulted in a raised reporting limit or distorted result.
W: Results reported on a wet-weight basis.
*: Value reported is outside QA limits

Analyte	Result	Units	Report Limit	Dilution Factor	Prep Batch	Prep Date/Time	Analysis Date/Time	Analyst
Plus List (VOCs) (EPA 5030B/EPA 8260B) (Estimated result for trans-1,4-dichloro-2-butene, compound failed low on CCV)								
Isopropylbenzene	**U**	µg/L	5.0	1	VB09C10A	3/10/2009	3/10/2009	BAG
4-Methyl-2-pentanone	**U**	µg/L	50	1	VB09C10A	3/10/2009	3/10/2009	BAG
MTBE	**U**	µg/L	5.0	1	VB09C10A	3/10/2009	3/10/2009	BAG
Methyl Iodide	**U**	µg/L	1.0	1	VB09C10A	3/10/2009	3/10/2009	BAG
Methylene Chloride	**U**	µg/L	5.0	1	VB09C10A	3/10/2009	3/10/2009	BAG
2-Methylnaphthalene	**U**	µg/L	5.0	1	VB09C10A	3/10/2009	3/10/2009	BAG
Naphthalene	**U**	µg/L	5.0	1	VB09C10A	3/10/2009	3/10/2009	BAG
n-Propylbenzene	**U**	µg/L	1.0	1	VB09C10A	3/10/2009	3/10/2009	BAG
Styrene	**U**	µg/L	1.0	1	VB09C10A	3/10/2009	3/10/2009	BAG
1,1,1,2-Tetrachloroethane	**U**	µg/L	1.0	1	VB09C10A	3/10/2009	3/10/2009	BAG
1,1,2,2-Tetrachloroethane	**U**	µg/L	1.0	1	VB09C10A	3/10/2009	3/10/2009	BAG
Tetrachloroethene	**U**	µg/L	1.0	1	VB09C10A	3/10/2009	3/10/2009	BAG
Toluene	**U**	µg/L	1.0	1	VB09C10A	3/10/2009	3/10/2009	BAG
1,2,4-Trichlorobenzene	**U**	µg/L	5.0	1	VB09C10A	3/10/2009	3/10/2009	BAG
1,1,1-Trichloroethane	**U**	µg/L	1.0	1	VB09C10A	3/10/2009	3/10/2009	BAG
1,1,2-Trichloroethane	**U**	µg/L	1.0	1	VB09C10A	3/10/2009	3/10/2009	BAG
Trichloroethene	**U**	µg/L	1.0	1	VB09C10A	3/10/2009	3/10/2009	BAG
Trichlorofluoromethane	**U**	µg/L	1.0	1	VB09C10A	3/10/2009	3/10/2009	BAG
1,2,3-Trichloropropane	**U**	µg/L	1.0	1	VB09C10A	3/10/2009	3/10/2009	BAG
1,2,3-Trimethylbenzene	**U**	µg/L	1.0	1	VB09C10A	3/10/2009	3/10/2009	BAG

Analytical Laboratory Report

Client Identification:	**Envirologic Technologies, Inc.**	Sample Matrix:	**Ground Water**
Fibertec Project Number:	**33098**	Sample Number:	**33098-022**

Client Sample Information

Project Identification:	**Kzoo Co**	Client Sample Description:	**TRIP BLANK**
Project Number:	**080503**	Client Sample Number:	**22**
Sample Date:	**3/3/2009**	Chain of Custody Number:	**82431**

Comments:

Definitions/ Qualifiers:

A: Spike recovery or precision unusable due to dilution.
B: The analyte was detected in the associated method blank.
E: The analyte was detected at a concentration greater than the calibration range, therefore the result is estimated.
J: The concentration is an estimated value.
U: The analyte was not detected at or above the reporting limit.
X: Matrix Interference has resulted in a raised reporting limit or distorted result.
W: Results reported on a wet-weight basis.
*: Value reported is outside QA limits

Analyte	Result	Units	Report Limit	Dilution Factor	Prep Batch	Prep Date/Time	Analysis Date/Time	Analyst
Plus List (VOCs) (EPA 5030B/EPA 8260B) (Estimated result for trans-1,4-dichloro-2-butene, compound failed low on CCV)								
1,2,4-Trimethylbenzene	**U**	µg/L	1.0	1	VB09C10A	3/10/2009	3/10/2009	BAG
1,3,5-Trimethylbenzene	**U**	µg/L	1.0	1	VB09C10A	3/10/2009	3/10/2009	BAG
Vinyl Chloride	**U**	µg/L	1.0	1	VB09C10A	3/10/2009	3/10/2009	BAG
Xylenes	**U**	µg/L	3.0	1	VB09C10A	3/10/2009	3/10/2009	BAG

Analytical Laboratory Report

Client Identification:	**Envirologic Technologies, Inc.**	Sample Matrix:	**Soil/Solid**
Fibertec Project Number:	**33098**	Sample Number:	**33098-023**

Client Sample Information

Project Identification:	**Kzoo Co**	Client Sample Description:	**METHANOL BLANK**
Project Number:	**080503**	Client Sample Number:	**23**
Sample Date:	**3/3/2009**	Chain of Custody Number:	**82432**

Comments:

Definitions/ Qualifiers:

A: Spike recovery or precision unusable due to dilution.
B: The analyte was detected in the associated method blank.
E: The analyte was detected at a concentration greater than the calibration range, therefore the result is estimated.
J: The concentration is an estimated value.
U: The analyte was not detected at or above the reporting limit.
X: Matrix Interference has resulted in a raised reporting limit or distorted result.
W: Results reported on a wet-weight basis.
*: Value reported is outside QA limits

Analyte	Result	Units	Report Limit	Dilution Factor	Prep Batch	Prep Date/Time	Analysis Date/Time	Analyst
Plus List (VOCs), 5035 (EPA 5035/EPA 8260B)								
Acetone	**U**	µg/kg	1000	1	VA09C12a	3/3/2009	3/12/2009	JAS
Acrylonitrile	**U**	µg/kg	100	1	VA09C12a	3/3/2009	3/12/2009	JAS
Benzene	**U**	µg/kg	50	1	VA09C12a	3/3/2009	3/12/2009	JAS
Bromobenzene	**U**	µg/kg	100	1	VA09C12a	3/3/2009	3/12/2009	JAS
Bromochloromethane	**U**	µg/kg	100	1	VA09C12a	3/3/2009	3/12/2009	JAS
Bromodichloromethane	**U**	µg/kg	100	1	VA09C12a	3/3/2009	3/12/2009	JAS
Bromoform	**U**	µg/kg	100	1	VA09C12a	3/3/2009	3/12/2009	JAS
Bromomethane	**U**	µg/kg	200	1	VA09C12a	3/3/2009	3/12/2009	JAS
2-Butanone	**U**	µg/kg	750	1	VA09C12a	3/3/2009	3/12/2009	JAS
n-Butylbenzene	**U**	µg/kg	50	1	VA09C12a	3/3/2009	3/12/2009	JAS
sec-Butylbenzene	**U**	µg/kg	50	1	VA09C12a	3/3/2009	3/12/2009	JAS
tert-Butylbenzene	**U**	µg/kg	50	1	VA09C12a	3/3/2009	3/12/2009	JAS
Carbon Disulfide	**U**	µg/kg	250	1	VA09C12a	3/3/2009	3/12/2009	JAS
Carbon Tetrachloride	**U**	µg/kg	50	1	VA09C12a	3/3/2009	3/12/2009	JAS
Chlorobenzene	**U**	µg/kg	50	1	VA09C12a	3/3/2009	3/12/2009	JAS
Chloroethane	**U**	µg/kg	250	1	VA09C12a	3/3/2009	3/12/2009	JAS
Chloroform	**U**	µg/kg	50	1	VA09C12a	3/3/2009	3/12/2009	JAS
Chloromethane	**U**	µg/kg	250	1	VA09C12a	3/3/2009	3/12/2009	JAS
2-Chlorotoluene	**U**	µg/kg	50	1	VA09C12a	3/3/2009	3/12/2009	JAS
Dibromochloromethane	**U**	µg/kg	100	1	VA09C12a	3/3/2009	3/12/2009	JAS

Analytical Laboratory Report

Client Identification:	**Envirologic Technologies, Inc.**	Sample Matrix:	**Soil/Solid**
Fibertec Project Number:	**33098**	Sample Number:	**33098-023**

Client Sample Information

Project Identification:	**Kzoo Co**	Client Sample Description:	**METHANOL BLANK**
Project Number:	**080503**	Client Sample Number:	**23**
Sample Date:	**3/3/2009**	Chain of Custody Number:	**82432**

Comments:

Definitions/ Qualifiers:

A: Spike recovery or precision unusable due to dilution.
B: The analyte was detected in the associated method blank.
E: The analyte was detected at a concentration greater than the calibration range, therefore the result is estimated.
J: The concentration is an estimated value.
U: The analyte was not detected at or above the reporting limit.
X: Matrix Interference has resulted in a raised reporting limit or distorted result.
W: Results reported on a wet-weight basis.
*: Value reported is outside QA limits

Analyte	Result	Units	Report Limit	Dilution Factor	Prep Batch	Prep Date/Time	Analysis Date/Time	Analyst
Plus List (VOCs), 5035 (EPA 5035/EPA 8260B)								
1,2-Dibromo-3-chloropropane	**U**	µg/kg	10	1	VA09C12a	3/3/2009	3/12/2009	JAS
Dibromomethane	**U**	µg/kg	250	1	VA09C12a	3/3/2009	3/12/2009	JAS
1,2-Dichlorobenzene	**U**	µg/kg	100	1	VA09C12a	3/3/2009	3/12/2009	JAS
1,3-Dichlorobenzene	**U**	µg/kg	100	1	VA09C12a	3/3/2009	3/12/2009	JAS
1,4-Dichlorobenzene	**U**	µg/kg	100	1	VA09C12a	3/3/2009	3/12/2009	JAS
trans-1,4-Dichloro-2-butene	**U**	µg/kg	100	1	VA09C12a	3/3/2009	3/12/2009	JAS
Dichlorodifluoromethane	**U**	µg/kg	250	1	VA09C12a	3/3/2009	3/12/2009	JAS
1,1-Dichloroethane	**U**	µg/kg	50	1	VA09C12a	3/3/2009	3/12/2009	JAS
1,2-Dichloroethane	**U**	µg/kg	50	1	VA09C12a	3/3/2009	3/12/2009	JAS
1,1-Dichloroethene	**U**	µg/kg	50	1	VA09C12a	3/3/2009	3/12/2009	JAS
cis-1,2-Dichloroethene	**U**	µg/kg	50	1	VA09C12a	3/3/2009	3/12/2009	JAS
trans-1,2-Dichloroethene	**U**	µg/kg	50	1	VA09C12a	3/3/2009	3/12/2009	JAS
1,2-Dichloropropane	**U**	µg/kg	50	1	VA09C12a	3/3/2009	3/12/2009	JAS
cis-1,3-Dichloropropene	**U**	µg/kg	50	1	VA09C12a	3/3/2009	3/12/2009	JAS
trans-1,3-Dichloropropene	**U**	µg/kg	50	1	VA09C12a	3/3/2009	3/12/2009	JAS
Diethyl Ether	**U**	µg/kg	200	1	VA09C12a	3/3/2009	3/12/2009	JAS
Ethylbenzene	**U**	µg/kg	50	1	VA09C12a	3/3/2009	3/12/2009	JAS
Ethylene Dibromide	**U**	µg/kg	20	1	VA09C12a	3/3/2009	3/12/2009	JAS
Hexachloroethane	**U**	µg/kg	100	1	VA09C12a	3/3/2009	3/12/2009	JAS
2-Hexanone	**U**	µg/kg	2500	1	VA09C12a	3/3/2009	3/12/2009	JAS

Analytical Laboratory Report

Client Identification:	**Envirologic Technologies, Inc.**	Sample Matrix:	**Soil/Solid**
Fibertec Project Number:	**33098**	Sample Number:	**33098-023**

Client Sample Information

Project Identification:	**Kzoo Co**	Client Sample Description:	**METHANOL BLANK**
Project Number:	**080503**	Client Sample Number:	**23**
Sample Date:	**3/3/2009**	Chain of Custody Number:	**82432**

Comments:

Definitions/ Qualifiers:

A: Spike recovery or precision unusable due to dilution.
B: The analyte was detected in the associated method blank.
E: The analyte was detected at a concentration greater than the calibration range, therefore the result is estimated.
J: The concentration is an estimated value.
U: The analyte was not detected at or above the reporting limit.
X: Matrix Interference has resulted in a raised reporting limit or distorted result.
W: Results reported on a wet-weight basis.
*: Value reported is outside QA limits

Analyte	Result	Units	Report Limit	Dilution Factor	Prep Batch	Prep Date/Time	Analysis Date/Time	Analyst
Plus List (VOCs), 5035 (EPA 5035/EPA 8260B)								
Isopropylbenzene	**U**	µg/kg	250	1	VA09C12a	3/3/2009	3/12/2009	JAS
4-Methyl-2-pentanone	**U**	µg/kg	2500	1	VA09C12a	3/3/2009	3/12/2009	JAS
MTBE	**U**	µg/kg	250	1	VA09C12a	3/3/2009	3/12/2009	JAS
Methyl Iodide	**U**	µg/kg	100	1	VA09C12a	3/3/2009	3/12/2009	JAS
Methylene Chloride	**U**	µg/kg	100	1	VA09C12a	3/3/2009	3/12/2009	JAS
2-Methylnaphthalene	**U**	µg/kg	330	1	VA09C12a	3/3/2009	3/12/2009	JAS
Naphthalene	**U**	µg/kg	330	1	VA09C12a	3/3/2009	3/12/2009	JAS
n-Propylbenzene	**U**	µg/kg	100	1	VA09C12a	3/3/2009	3/12/2009	JAS
Styrene	**U**	µg/kg	50	1	VA09C12a	3/3/2009	3/12/2009	JAS
1,1,1,2-Tetrachloroethane	**U**	µg/kg	100	1	VA09C12a	3/3/2009	3/12/2009	JAS
1,1,2,2-Tetrachloroethane	**U**	µg/kg	50	1	VA09C12a	3/3/2009	3/12/2009	JAS
Tetrachloroethene	**U**	µg/kg	50	1	VA09C12a	3/3/2009	3/12/2009	JAS
Toluene	**U**	µg/kg	100	1	VA09C12a	3/3/2009	3/12/2009	JAS
1,2,4-Trichlorobenzene	**U**	µg/kg	330	1	VA09C12a	3/3/2009	3/12/2009	JAS
1,1,1-Trichloroethane	**U**	µg/kg	50	1	VA09C12a	3/3/2009	3/12/2009	JAS
1,1,2-Trichloroethane	**U**	µg/kg	50	1	VA09C12a	3/3/2009	3/12/2009	JAS
Trichloroethene	**U**	µg/kg	50	1	VA09C12a	3/3/2009	3/12/2009	JAS
Trichlorofluoromethane	**U**	µg/kg	100	1	VA09C12a	3/3/2009	3/12/2009	JAS
1,2,3-Trichloropropane	**U**	µg/kg	100	1	VA09C12a	3/3/2009	3/12/2009	JAS
1,2,3-Trimethylbenzene	**U**	µg/kg	100	1	VA09C12a	3/3/2009	3/12/2009	JAS

Analytical Laboratory Report

Client Identification:	**Envirologic Technologies, Inc.**	Sample Matrix:	**Soil/Solid**
Fibertec Project Number:	**33098**	Sample Number:	**33098-023**

Client Sample Information

Project Identification:	**Kzoo Co**	Client Sample Description:	**METHANOL BLANK**
Project Number:	**080503**	Client Sample Number:	**23**
Sample Date:	**3/3/2009**	Chain of Custody Number:	**82432**

Comments:

Definitions/ Qualifiers:

A: Spike recovery or precision unusable due to dilution.
B: The analyte was detected in the associated method blank.
E: The analyte was detected at a concentration greater than the calibration range, therefore the result is estimated.
J: The concentration is an estimated value.
U: The analyte was not detected at or above the reporting limit.
X: Matrix Interference has resulted in a raised reporting limit or distorted result.
W: Results reported on a wet-weight basis.
*: Value reported is outside QA limits

Analyte	Result	Units	Report Limit	Dilution Factor	Prep Batch	Prep Date/Time	Analysis Date/Time	Analyst
Plus List (VOCs), 5035 (EPA 5035/EPA 8260B)								
1,2,4-Trimethylbenzene	**U**	µg/kg	100	1	VA09C12a	3/3/2009	3/12/2009	JAS
1,3,5-Trimethylbenzene	**U**	µg/kg	100	1	VA09C12a	3/3/2009	3/12/2009	JAS
Vinyl Chloride	**U**	µg/kg	40	1	VA09C12a	3/3/2009	3/12/2009	JAS
Xylenes	**U**	µg/kg	150	1	VA09C12a	3/3/2009	3/12/2009	JAS

Analytical Laboratory Report

Client Identification:	**Envirologic Technologies, Inc.**	Sample Matrix:	**Air**
Fibertec Project Number:	**33098**	Sample Number:	**33098-024**

Client Sample Information

Project Identification:	**Kzoo Co**	Client Sample Description:	**SUB-17**
Project Number:	**080503**	Client Sample Number:	**24**
Sample Date:	**3/6/2009**	Chain of Custody Number:	**82432**

Comments:

Definitions/ Qualifiers:

A: Spike recovery or precision unusable due to dilution.
B: The analyte was detected in the associated method blank.
E: The analyte was detected at a concentration greater than the calibration range, therefore the result is estimated.
J: The concentration is an estimated value.
U: The analyte was not detected at or above the reporting limit.
X: Matrix Interference has resulted in a raised reporting limit or distorted result.
W: Results reported on a wet-weight basis.
*: Value reported is outside QA limits

Analyte	Result	Units	Report Limit	Dilution Factor	Prep Batch	Prep Date/Time	Analysis Date/Time	Analyst
TO-15 (TO-15)								
Acetone	**U**	ppbv	4.8	14	V409C11A	3/11/2009	3/11/2009	BAG
Benzene	**U**	ppbv	5.3	14	V409C11A	3/11/2009	3/11/2009	BAG
Benzyl Chloride	**U**	ppbv	5.3	14	V409C11A	3/11/2009	3/11/2009	BAG
Bromodichloromethane	**U**	ppbv	5.2	14	V409C11A	3/11/2009	3/11/2009	BAG
Bromoform	**U**	ppbv	5.3	14	V409C11A	3/11/2009	3/11/2009	BAG
Bromomethane	**U**	ppbv	15	14	V409C11A	3/11/2009	3/11/2009	BAG
1,3-Butadiene	**U**	ppbv	5.2	14	V409C11A	3/11/2009	3/11/2009	BAG
2-Butanone	**U**	ppbv	15	14	V409C11A	3/11/2009	3/11/2009	BAG
Carbon Disulfide	**U**	ppbv	4.9	14	V409C11A	3/11/2009	3/11/2009	BAG
Carbon Tetrachloride	**U**	ppbv	5.3	14	V409C11A	3/11/2009	3/11/2009	BAG
Chlorobenzene	**U**	ppbv	5.3	14	V409C11A	3/11/2009	3/11/2009	BAG
Chloroethane	**U**	ppbv	4.9	14	V409C11A	3/11/2009	3/11/2009	BAG
Chloroform	**U**	ppbv	4.6	14	V409C11A	3/11/2009	3/11/2009	BAG
Chloromethane	**U**	ppbv	15	14	V409C11A	3/11/2009	3/11/2009	BAG
Cyclohexane	**U**	ppbv	4.8	14	V409C11A	3/11/2009	3/11/2009	BAG
Dibromochloromethane	**U**	ppbv	5.2	14	V409C11A	3/11/2009	3/11/2009	BAG
1,2-Dichlorobenzene	**U**	ppbv	5.3	14	V409C11A	3/11/2009	3/11/2009	BAG
1,3-Dichlorobenzene	**U**	ppbv	5.3	14	V409C11A	3/11/2009	3/11/2009	BAG
1,4-Dichlorobenzene	**U**	ppbv	5.3	14	V409C11A	3/11/2009	3/11/2009	BAG
Dichlorodifluoromethane	**U**	ppbv	4.9	14	V409C11A	3/11/2009	3/11/2009	BAG

Analytical Laboratory Report

Client Identification:	**Envirologic Technologies, Inc.**	Sample Matrix:	**Air**
Fibertec Project Number:	**33098**	Sample Number:	**33098-024**

Client Sample Information

Project Identification:	**Kzoo Co**	Client Sample Description:	**SUB-17**
Project Number:	**080503**	Client Sample Number:	**24**
Sample Date:	**3/6/2009**	Chain of Custody Number:	**82432**

Comments:

Definitions/ Qualifiers:

A: Spike recovery or precision unusable due to dilution.
B: The analyte was detected in the associated method blank.
E: The analyte was detected at a concentration greater than the calibration range, therefore the result is estimated.
J: The concentration is an estimated value.
U: The analyte was not detected at or above the reporting limit.
X: Matrix Interference has resulted in a raised reporting limit or distorted result.
W: Results reported on a wet-weight basis.
*: Value reported is outside QA limits

Analyte	Result	Units	Report Limit	Dilution Factor	Prep Batch	Prep Date/Time	Analysis Date/Time	Analyst
TO-15 (TO-15)								
1,1-Dichloroethane	**U**	ppbv	5.2	14	V409C11A	3/11/2009	3/11/2009	BAG
1,2-Dichloroethane	**U**	ppbv	5.2	14	V409C11A	3/11/2009	3/11/2009	BAG
1,1-Dichloroethene	**U**	ppbv	5.0	14	V409C11A	3/11/2009	3/11/2009	BAG
cis-1,2-Dichloroethene	**U**	ppbv	5.3	14	V409C11A	3/11/2009	3/11/2009	BAG
trans-1,2-Dichloroethene	**U**	ppbv	4.6	14	V409C11A	3/11/2009	3/11/2009	BAG
1,2-Dichloropropane	**U**	ppbv	16	14	V409C11A	3/11/2009	3/11/2009	BAG
cis-1,3-Dichloropropene	**U**	ppbv	5.0	14	V409C11A	3/11/2009	3/11/2009	BAG
trans-1,3-Dichloropropene	**U**	ppbv	5.6	14	V409C11A	3/11/2009	3/11/2009	BAG
1,4-Dioxane	**U**	ppbv	5.2	14	V409C11A	3/11/2009	3/11/2009	BAG
Ethyl Acetate	**U**	ppbv	14	14	V409C11A	3/11/2009	3/11/2009	BAG
Ethylbenzene	**U**	ppbv	5.3	14	V409C11A	3/11/2009	3/11/2009	BAG
Ethylene Dibromide	**U**	ppbv	5.0	14	V409C11A	3/11/2009	3/11/2009	BAG
4-Ethyltoluene	**U**	ppbv	5.3	14	V409C11A	3/11/2009	3/11/2009	BAG
n-Heptane	**U**	ppbv	4.9	14	V409C11A	3/11/2009	3/11/2009	BAG
Hexachlorobutadiene	**U**	ppbv	5.3	14	V409C11A	3/11/2009	3/11/2009	BAG
n-Hexane	**U**	ppbv	4.6	14	V409C11A	3/11/2009	3/11/2009	BAG
2-Hexanone	**U**	ppbv	16	14	V409C11A	3/11/2009	3/11/2009	BAG
Isopropyl Alcohol	**37**	ppbv	5.2	14	V409C11A	3/11/2009	3/11/2009	BAG
Methylene Chloride	**U**	ppbv	5.9	16	V409C11A	3/11/2009	3/11/2009	BAG
4-Methyl-2-pentanone	**U**	ppbv	5.3	14	V409C11A	3/11/2009	3/11/2009	BAG

Analytical Laboratory Report

Client Identification:	**Envirologic Technologies, Inc.**	Sample Matrix:	**Air**
Fibertec Project Number:	**33098**	Sample Number:	**33098-024**

Client Sample Information

Project Identification:	**Kzoo Co**	Client Sample Description:	**SUB-17**
Project Number:	**080503**	Client Sample Number:	**24**
Sample Date:	**3/6/2009**	Chain of Custody Number:	**82432**

Comments:

Definitions/ Qualifiers:

A: Spike recovery or precision unusable due to dilution.
B: The analyte was detected in the associated method blank.
E: The analyte was detected at a concentration greater than the calibration range, therefore the result is estimated.
J: The concentration is an estimated value.
U: The analyte was not detected at or above the reporting limit.
X: Matrix Interference has resulted in a raised reporting limit or distorted result.
W: Results reported on a wet-weight basis.
*: Value reported is outside QA limits

Analyte	Result	Units	Report Limit	Dilution Factor	Prep Batch	Prep Date/Time	Analysis Date/Time	Analyst
TO-15 (TO-15)								
MTBE	**U**	ppbv	4.9	14	V409C11A	3/11/2009	3/11/2009	BAG
Propylene	**U**	ppbv	5.0	14	V409C11A	3/11/2009	3/11/2009	BAG
Styrene	**U**	ppbv	5.3	14	V409C11A	3/11/2009	3/11/2009	BAG
1,1,2,2-Tetrachloroethane	**U**	ppbv	5.3	14	V409C11A	3/11/2009	3/11/2009	BAG
Tetrachloroethene	**25**	ppbv	5.2	14	V409C11A	3/11/2009	3/11/2009	BAG
Tetrahydrofuran	**U**	ppbv	15	14	V409C11A	3/11/2009	3/11/2009	BAG
Toluene	**U**	ppbv	5.3	14	V409C11A	3/11/2009	3/11/2009	BAG
1,2,4-Trichlorobenzene	**U**	ppbv	5.3	14	V409C11A	3/11/2009	3/11/2009	BAG
1,1,1-Trichloroethane	**U**	ppbv	5.2	14	V409C11A	3/11/2009	3/11/2009	BAG
1,1,2-Trichloroethane	**U**	ppbv	5.3	14	V409C11A	3/11/2009	3/11/2009	BAG
Trichloroethene	**U**	ppbv	5.2	14	V409C11A	3/11/2009	3/11/2009	BAG
Trichlorofluoromethane	**U**	ppbv	4.8	14	V409C11A	3/11/2009	3/11/2009	BAG
1,1,2-Trichloro-1,2,2-trifluoroethane	**U**	ppbv	5.0	14	V409C11A	3/11/2009	3/11/2009	BAG
1,2,4-Trimethylbenzene	**U**	ppbv	5.3	14	V409C11A	3/11/2009	3/11/2009	BAG
1,3,5-Trimethylbenzene	**U**	ppbv	5.3	14	V409C11A	3/11/2009	3/11/2009	BAG
Vinyl Acetate	**U**	ppbv	16	14	V409C11A	3/11/2009	3/11/2009	BAG
Vinyl Chloride	**U**	ppbv	4.9	14	V409C11A	3/11/2009	3/11/2009	BAG
m&p-Xylene	**U**	ppbv	11	14	V409C11A	3/11/2009	3/11/2009	BAG
o-Xylene	**U**	ppbv	5.3	14	V409C11A	3/11/2009	3/11/2009	BAG

Analytical Laboratory Report

Client Identification:	**Envirologic Technologies, Inc.**	Sample Matrix:	**Air**
Fibertec Project Number:	**33098**	Sample Number:	**33098-025**

Client Sample Information

Project Identification:	**Kzoo Co**	Client Sample Description:	**SUB-8**
Project Number:	**080503**	Client Sample Number:	**25**
Sample Date:	**3/6/2009**	Chain of Custody Number:	**82432**

Comments:

Definitions/ Qualifiers:

A: Spike recovery or precision unusable due to dilution.
B: The analyte was detected in the associated method blank.
E: The analyte was detected at a concentration greater than the calibration range, therefore the result is estimated.
J: The concentration is an estimated value.
U: The analyte was not detected at or above the reporting limit.
X: Matrix Interference has resulted in a raised reporting limit or distorted result.
W: Results reported on a wet-weight basis.
*: Value reported is outside QA limits

Analyte	Result	Units	Report Limit	Dilution Factor	Prep Batch	Prep Date/Time	Analysis Date/Time	Analyst
TO-15 (TO-15)								
Acetone	**U**	ppbv	7.8	23	V409C11A	3/11/2009	3/11/2009	BAG
Benzene	**U**	ppbv	6.1	16	V409C11A	3/11/2009	3/11/2009	BAG
Benzyl Chloride	**U**	ppbv	6.1	16	V409C11A	3/11/2009	3/11/2009	BAG
Bromodichloromethane	**U**	ppbv	5.9	16	V409C11A	3/11/2009	3/11/2009	BAG
Bromoform	**U**	ppbv	6.1	16	V409C11A	3/11/2009	3/11/2009	BAG
Bromomethane	**U**	ppbv	17	16	V409C11A	3/11/2009	3/11/2009	BAG
1,3-Butadiene	**U**	ppbv	5.9	16	V409C11A	3/11/2009	3/11/2009	BAG
2-Butanone	**U**	ppbv	17	16	V409C11A	3/11/2009	3/11/2009	BAG
Carbon Disulfide	**U**	ppbv	5.6	16	V409C11A	3/11/2009	3/11/2009	BAG
Carbon Tetrachloride	**U**	ppbv	6.1	16	V409C11A	3/11/2009	3/11/2009	BAG
Chlorobenzene	**U**	ppbv	6.1	16	V409C11A	3/11/2009	3/11/2009	BAG
Chloroethane	**U**	ppbv	5.6	16	V409C11A	3/11/2009	3/11/2009	BAG
Chloroform	**U**	ppbv	5.3	16	V409C11A	3/11/2009	3/11/2009	BAG
Chloromethane	**U**	ppbv	17	16	V409C11A	3/11/2009	3/11/2009	BAG
Cyclohexane	**U**	ppbv	5.4	16	V409C11A	3/11/2009	3/11/2009	BAG
Dibromochloromethane	**U**	ppbv	5.9	16	V409C11A	3/11/2009	3/11/2009	BAG
1,2-Dichlorobenzene	**U**	ppbv	6.1	16	V409C11A	3/11/2009	3/11/2009	BAG
1,3-Dichlorobenzene	**U**	ppbv	6.1	16	V409C11A	3/11/2009	3/11/2009	BAG
1,4-Dichlorobenzene	**U**	ppbv	6.1	16	V409C11A	3/11/2009	3/11/2009	BAG
Dichlorodifluoromethane	**U**	ppbv	5.6	16	V409C11A	3/11/2009	3/11/2009	BAG

Analytical Laboratory Report

Client Identification:	**Envirologic Technologies, Inc.**	Sample Matrix:	**Air**
Fibertec Project Number:	**33098**	Sample Number:	**33098-025**

Client Sample Information

Project Identification:	**Kzoo Co**	Client Sample Description:	**SUB-8**
Project Number:	**080503**	Client Sample Number:	**25**
Sample Date:	**3/6/2009**	Chain of Custody Number:	**82432**

Comments:

Definitions/ Qualifiers:

A: Spike recovery or precision unusable due to dilution.
B: The analyte was detected in the associated method blank.
E: The analyte was detected at a concentration greater than the calibration range, therefore the result is estimated.
J: The concentration is an estimated value.
U: The analyte was not detected at or above the reporting limit.
X: Matrix Interference has resulted in a raised reporting limit or distorted result.
W: Results reported on a wet-weight basis.
*: Value reported is outside QA limits

Analyte	Result	Units	Report Limit	Dilution Factor	Prep Batch	Prep Date/Time	Analysis Date/Time	Analyst
TO-15 (TO-15)								
1,1-Dichloroethane	**U**	ppbv	5.9	16	V409C11A	3/11/2009	3/11/2009	BAG
1,2-Dichloroethane	**U**	ppbv	5.9	16	V409C11A	3/11/2009	3/11/2009	BAG
1,1-Dichloroethene	**U**	ppbv	5.8	16	V409C11A	3/11/2009	3/11/2009	BAG
cis-1,2-Dichloroethene	**U**	ppbv	6.1	16	V409C11A	3/11/2009	3/11/2009	BAG
trans-1,2-Dichloroethene	**U**	ppbv	5.3	16	V409C11A	3/11/2009	3/11/2009	BAG
1,2-Dichloropropane	**U**	ppbv	18	16	V409C11A	3/11/2009	3/11/2009	BAG
cis-1,3-Dichloropropene	**U**	ppbv	5.8	16	V409C11A	3/11/2009	3/11/2009	BAG
trans-1,3-Dichloropropene	**U**	ppbv	6.4	16	V409C11A	3/11/2009	3/11/2009	BAG
1,4-Dioxane	**U**	ppbv	5.9	16	V409C11A	3/11/2009	3/11/2009	BAG
Ethyl Acetate	**U**	ppbv	16	16	V409C11A	3/11/2009	3/11/2009	BAG
Ethylbenzene	**U**	ppbv	6.1	16	V409C11A	3/11/2009	3/11/2009	BAG
Ethylene Dibromide	**U**	ppbv	5.8	16	V409C11A	3/11/2009	3/11/2009	BAG
4-Ethyltoluene	**U**	ppbv	6.1	16	V409C11A	3/11/2009	3/11/2009	BAG
n-Heptane	**U**	ppbv	5.6	16	V409C11A	3/11/2009	3/11/2009	BAG
Hexachlorobutadiene	**U**	ppbv	6.1	16	V409C11A	3/11/2009	3/11/2009	BAG
n-Hexane	**U**	ppbv	5.3	16	V409C11A	3/11/2009	3/11/2009	BAG
2-Hexanone	**U**	ppbv	18	16	V409C11A	3/11/2009	3/11/2009	BAG
Isopropyl Alcohol	**68**	ppbv	5.9	16	V409C11A	3/11/2009	3/11/2009	BAG
Methylene Chloride	**U**	ppbv	6.3	17	V409C11A	3/11/2009	3/11/2009	BAG
4-Methyl-2-pentanone	**U**	ppbv	6.1	16	V409C11A	3/11/2009	3/11/2009	BAG

Analytical Laboratory Report

Client Identification:	**Envirologic Technologies, Inc.**	Sample Matrix:	**Air**
Fibertec Project Number:	**33098**	Sample Number:	**33098-025**

Client Sample Information

Project Identification:	**Kzoo Co**	Client Sample Description:	**SUB-8**
Project Number:	**080503**	Client Sample Number:	**25**
Sample Date:	**3/6/2009**	Chain of Custody Number:	**82432**

Comments:

Definitions/ Qualifiers:

A: Spike recovery or precision unusable due to dilution.
B: The analyte was detected in the associated method blank.
E: The analyte was detected at a concentration greater than the calibration range, therefore the result is estimated.
J: The concentration is an estimated value.
U: The analyte was not detected at or above the reporting limit.
X: Matrix Interference has resulted in a raised reporting limit or distorted result.
W: Results reported on a wet-weight basis.
*: Value reported is outside QA limits

Analyte	Result	Units	Report Limit	Dilution Factor	Prep Batch	Prep Date/Time	Analysis Date/Time	Analyst
TO-15 (TO-15)								
MTBE	**U**	ppbv	5.6	16	V409C11A	3/11/2009	3/11/2009	BAG
Propylene	**U**	ppbv	5.8	16	V409C11A	3/11/2009	3/11/2009	BAG
Styrene	**U**	ppbv	6.1	16	V409C11A	3/11/2009	3/11/2009	BAG
1,1,2,2-Tetrachloroethane	**U**	ppbv	6.1	16	V409C11A	3/11/2009	3/11/2009	BAG
Tetrachloroethene	**11**	ppbv	5.9	16	V409C11A	3/11/2009	3/11/2009	BAG
Tetrahydrofuran	**U**	ppbv	17	16	V409C11A	3/11/2009	3/11/2009	BAG
Toluene	**U**	ppbv	6.1	16	V409C11A	3/11/2009	3/11/2009	BAG
1,2,4-Trichlorobenzene	**U**	ppbv	6.1	16	V409C11A	3/11/2009	3/11/2009	BAG
1,1,1-Trichloroethane	**U**	ppbv	5.9	16	V409C11A	3/11/2009	3/11/2009	BAG
1,1,2-Trichloroethane	**U**	ppbv	6.1	16	V409C11A	3/11/2009	3/11/2009	BAG
Trichloroethene	**U**	ppbv	5.9	16	V409C11A	3/11/2009	3/11/2009	BAG
Trichlorofluoromethane	**U**	ppbv	5.4	16	V409C11A	3/11/2009	3/11/2009	BAG
1,1,2-Trichloro-1,2,2-trifluoroethane	**U**	ppbv	5.8	16	V409C11A	3/11/2009	3/11/2009	BAG
1,2,4-Trimethylbenzene	**U**	ppbv	6.1	16	V409C11A	3/11/2009	3/11/2009	BAG
1,3,5-Trimethylbenzene	**U**	ppbv	6.1	16	V409C11A	3/11/2009	3/11/2009	BAG
Vinyl Acetate	**U**	ppbv	18	16	V409C11A	3/11/2009	3/11/2009	BAG
Vinyl Chloride	**U**	ppbv	5.6	16	V409C11A	3/11/2009	3/11/2009	BAG
m&p-Xylene	**U**	ppbv	12	16	V409C11A	3/11/2009	3/11/2009	BAG
o-Xylene	**U**	ppbv	6.1	16	V409C11A	3/11/2009	3/11/2009	BAG

Analytical Laboratory Report

Client Identification:	**Envirologic Technologies, Inc.**	Sample Matrix:	**Air**
Fibertec Project Number:	**33098**	Sample Number:	**33098-026**

Client Sample Information

Project Identification:	**Kzoo Co**	Client Sample Description:	**SUB-18**
Project Number:	**080503**	Client Sample Number:	**26**
Sample Date:	**3/6/2009**	Chain of Custody Number:	**82432**

Comments:

Definitions/ Qualifiers:

A: Spike recovery or precision unusable due to dilution.
B: The analyte was detected in the associated method blank.
E: The analyte was detected at a concentration greater than the calibration range, therefore the result is estimated.
J: The concentration is an estimated value.
U: The analyte was not detected at or above the reporting limit.
X: Matrix Interference has resulted in a raised reporting limit or distorted result.
W: Results reported on a wet-weight basis.
*: Value reported is outside QA limits

Analyte	Result	Units	Report Limit	Dilution Factor	Prep Batch	Prep Date/Time	Analysis Date/Time	Analyst
TO-15 (TO-15)								
Acetone	**U**	ppbv	4.8	14	V409C11A	3/11/2009	3/11/2009	BAG
Benzene	**U**	ppbv	5.3	14	V409C11A	3/11/2009	3/11/2009	BAG
Benzyl Chloride	**U**	ppbv	5.3	14	V409C11A	3/11/2009	3/11/2009	BAG
Bromodichloromethane	**U**	ppbv	5.2	14	V409C11A	3/11/2009	3/11/2009	BAG
Bromoform	**U**	ppbv	5.3	14	V409C11A	3/11/2009	3/11/2009	BAG
Bromomethane	**U**	ppbv	15	14	V409C11A	3/11/2009	3/11/2009	BAG
1,3-Butadiene	**U**	ppbv	5.2	14	V409C11A	3/11/2009	3/11/2009	BAG
2-Butanone	**U**	ppbv	15	14	V409C11A	3/11/2009	3/11/2009	BAG
Carbon Disulfide	**U**	ppbv	4.9	14	V409C11A	3/11/2009	3/11/2009	BAG
Carbon Tetrachloride	**U**	ppbv	5.3	14	V409C11A	3/11/2009	3/11/2009	BAG
Chlorobenzene	**U**	ppbv	5.3	14	V409C11A	3/11/2009	3/11/2009	BAG
Chloroethane	**U**	ppbv	4.9	14	V409C11A	3/11/2009	3/11/2009	BAG
Chloroform	**U**	ppbv	4.6	14	V409C11A	3/11/2009	3/11/2009	BAG
Chloromethane	**U**	ppbv	15	14	V409C11A	3/11/2009	3/11/2009	BAG
Cyclohexane	**U**	ppbv	4.8	14	V409C11A	3/11/2009	3/11/2009	BAG
Dibromochloromethane	**U**	ppbv	5.2	14	V409C11A	3/11/2009	3/11/2009	BAG
1,2-Dichlorobenzene	**U**	ppbv	5.3	14	V409C11A	3/11/2009	3/11/2009	BAG
1,3-Dichlorobenzene	**U**	ppbv	5.3	14	V409C11A	3/11/2009	3/11/2009	BAG
1,4-Dichlorobenzene	**U**	ppbv	5.3	14	V409C11A	3/11/2009	3/11/2009	BAG
Dichlorodifluoromethane	**U**	ppbv	4.9	14	V409C11A	3/11/2009	3/11/2009	BAG

Analytical Laboratory Report

Client Identification:	**Envirologic Technologies, Inc.**	Sample Matrix:	**Air**
Fibertec Project Number:	**33098**	Sample Number:	**33098-026**

Client Sample Information

Project Identification:	**Kzoo Co**	Client Sample Description:	**SUB-18**
Project Number:	**080503**	Client Sample Number:	**26**
Sample Date:	**3/6/2009**	Chain of Custody Number:	**82432**

Comments:

Definitions/ Qualifiers:

A: Spike recovery or precision unusable due to dilution.
B: The analyte was detected in the associated method blank.
E: The analyte was detected at a concentration greater than the calibration range, therefore the result is estimated.
J: The concentration is an estimated value.
U: The analyte was not detected at or above the reporting limit.
X: Matrix Interference has resulted in a raised reporting limit or distorted result.
W: Results reported on a wet-weight basis.
*: Value reported is outside QA limits

Analyte	Result	Units	Report Limit	Dilution Factor	Prep Batch	Prep Date/Time	Analysis Date/Time	Analyst
TO-15 (TO-15)								
1,1-Dichloroethane	**U**	ppbv	5.2	14	V409C11A	3/11/2009	3/11/2009	BAG
1,2-Dichloroethane	**U**	ppbv	5.2	14	V409C11A	3/11/2009	3/11/2009	BAG
1,1-Dichloroethene	**U**	ppbv	5.0	14	V409C11A	3/11/2009	3/11/2009	BAG
cis-1,2-Dichloroethene	**U**	ppbv	5.3	14	V409C11A	3/11/2009	3/11/2009	BAG
trans-1,2-Dichloroethene	**U**	ppbv	4.6	14	V409C11A	3/11/2009	3/11/2009	BAG
1,2-Dichloropropane	**U**	ppbv	16	14	V409C11A	3/11/2009	3/11/2009	BAG
cis-1,3-Dichloropropene	**U**	ppbv	5.0	14	V409C11A	3/11/2009	3/11/2009	BAG
trans-1,3-Dichloropropene	**U**	ppbv	5.6	14	V409C11A	3/11/2009	3/11/2009	BAG
1,4-Dioxane	**U**	ppbv	5.2	14	V409C11A	3/11/2009	3/11/2009	BAG
Ethyl Acetate	**U**	ppbv	14	14	V409C11A	3/11/2009	3/11/2009	BAG
Ethylbenzene	**U**	ppbv	5.3	14	V409C11A	3/11/2009	3/11/2009	BAG
Ethylene Dibromide	**U**	ppbv	5.0	14	V409C11A	3/11/2009	3/11/2009	BAG
4-Ethyltoluene	**U**	ppbv	5.3	14	V409C11A	3/11/2009	3/11/2009	BAG
n-Heptane	**U**	ppbv	4.9	14	V409C11A	3/11/2009	3/11/2009	BAG
Hexachlorobutadiene	**U**	ppbv	5.3	14	V409C11A	3/11/2009	3/11/2009	BAG
n-Hexane	**U**	ppbv	4.6	14	V409C11A	3/11/2009	3/11/2009	BAG
2-Hexanone	**U**	ppbv	16	14	V409C11A	3/11/2009	3/11/2009	BAG
Methylene Chloride	**U**	ppbv	5.9	16	V409C11A	3/11/2009	3/11/2009	BAG
4-Methyl-2-pentanone	**U**	ppbv	5.3	14	V409C11A	3/11/2009	3/11/2009	BAG
MTBE	**U**	ppbv	4.9	14	V409C11A	3/11/2009	3/11/2009	BAG

Analytical Laboratory Report

Client Identification:	**Envirologic Technologies, Inc.**	Sample Matrix:	**Air**
Fibertec Project Number:	**33098**	Sample Number:	**33098-026**

Client Sample Information

Project Identification:	**Kzoo Co**	Client Sample Description:	**SUB-18**
Project Number:	**080503**	Client Sample Number:	**26**
Sample Date:	**3/6/2009**	Chain of Custody Number:	**82432**

Comments:

Definitions/ Qualifiers:

A: Spike recovery or precision unusable due to dilution.
B: The analyte was detected in the associated method blank.
E: The analyte was detected at a concentration greater than the calibration range, therefore the result is estimated.
J: The concentration is an estimated value.
U: The analyte was not detected at or above the reporting limit.
X: Matrix Interference has resulted in a raised reporting limit or distorted result.
W: Results reported on a wet-weight basis.
*: Value reported is outside QA limits

Analyte	Result	Units	Report Limit	Dilution Factor	Prep Batch	Prep Date/Time	Analysis Date/Time	Analyst
TO-15 (TO-15)								
Propylene	**760**	ppbv	5.0	14	V409C11A	3/11/2009	3/11/2009	BAG
Styrene	**U**	ppbv	5.3	14	V409C11A	3/11/2009	3/11/2009	BAG
1,1,2,2-Tetrachloroethane	**U**	ppbv	5.3	14	V409C11A	3/11/2009	3/11/2009	BAG
Tetrachloroethene	**U**	ppbv	5.2	14	V409C11A	3/11/2009	3/11/2009	BAG
Tetrahydrofuran	**U**	ppbv	15	14	V409C11A	3/11/2009	3/11/2009	BAG
Toluene	**U**	ppbv	5.3	14	V409C11A	3/11/2009	3/11/2009	BAG
1,2,4-Trichlorobenzene	**U**	ppbv	5.3	14	V409C11A	3/11/2009	3/11/2009	BAG
1,1,1-Trichloroethane	**U**	ppbv	5.2	14	V409C11A	3/11/2009	3/11/2009	BAG
1,1,2-Trichloroethane	**U**	ppbv	5.3	14	V409C11A	3/11/2009	3/11/2009	BAG
Trichloroethene	**U**	ppbv	5.2	14	V409C11A	3/11/2009	3/11/2009	BAG
Trichlorofluoromethane	**U**	ppbv	4.8	14	V409C11A	3/11/2009	3/11/2009	BAG
1,1,2-Trichloro-1,2,2-trifluoroethane	**U**	ppbv	5.0	14	V409C11A	3/11/2009	3/11/2009	BAG
1,2,4-Trimethylbenzene	**U**	ppbv	5.3	14	V409C11A	3/11/2009	3/11/2009	BAG
1,3,5-Trimethylbenzene	**U**	ppbv	5.3	14	V409C11A	3/11/2009	3/11/2009	BAG
Vinyl Acetate	**U**	ppbv	16	14	V409C11A	3/11/2009	3/11/2009	BAG
Vinyl Chloride	**U**	ppbv	4.9	14	V409C11A	3/11/2009	3/11/2009	BAG
m&p-Xylene	**U**	ppbv	11	14	V409C11A	3/11/2009	3/11/2009	BAG
o-Xylene	**U**	ppbv	5.3	14	V409C11A	3/11/2009	3/11/2009	BAG

Analytical Laboratory Report

Client Identification:	**Envirologic Technologies, Inc.**	Sample Matrix:	**Air**
Fibertec Project Number:	**33098**	Sample Number:	**33098-027**

Client Sample Information

Project Identification:	**Kzoo Co**	Client Sample Description:	**SUB-7**
Project Number:	**080503**	Client Sample Number:	**27**
Sample Date:	**3/6/2009**	Chain of Custody Number:	**82432**

Comments:

Definitions/ Qualifiers:

A: Spike recovery or precision unusable due to dilution.
B: The analyte was detected in the associated method blank.
E: The analyte was detected at a concentration greater than the calibration range, therefore the result is estimated.
J: The concentration is an estimated value.
U: The analyte was not detected at or above the reporting limit.
X: Matrix Interference has resulted in a raised reporting limit or distorted result.
W: Results reported on a wet-weight basis.
*: Value reported is outside QA limits

Analyte	Result	Units	Report Limit	Dilution Factor	Prep Batch	Prep Date/Time	Analysis Date/Time	Analyst
TO-15 (TO-15)								
Acetone	**U**	ppbv	12	36	V409C11A	3/11/2009	3/11/2009	BAG
Benzene	**U**	ppbv	6.1	16	V409C11A	3/11/2009	3/11/2009	BAG
Benzyl Chloride	**U**	ppbv	6.1	16	V409C11A	3/11/2009	3/11/2009	BAG
Bromodichloromethane	**U**	ppbv	5.9	16	V409C11A	3/11/2009	3/11/2009	BAG
Bromoform	**U**	ppbv	6.1	16	V409C11A	3/11/2009	3/11/2009	BAG
Bromomethane	**U**	ppbv	17	16	V409C11A	3/11/2009	3/11/2009	BAG
1,3-Butadiene	**U**	ppbv	5.9	16	V409C11A	3/11/2009	3/11/2009	BAG
2-Butanone	**U**	ppbv	17	16	V409C11A	3/11/2009	3/11/2009	BAG
Carbon Disulfide	**U**	ppbv	5.6	16	V409C11A	3/11/2009	3/11/2009	BAG
Carbon Tetrachloride	**U**	ppbv	6.1	16	V409C11A	3/11/2009	3/11/2009	BAG
Chlorobenzene	**U**	ppbv	6.1	16	V409C11A	3/11/2009	3/11/2009	BAG
Chloroethane	**U**	ppbv	5.6	16	V409C11A	3/11/2009	3/11/2009	BAG
Chloroform	**U**	ppbv	5.3	16	V409C11A	3/11/2009	3/11/2009	BAG
Chloromethane	**U**	ppbv	17	16	V409C11A	3/11/2009	3/11/2009	BAG
Cyclohexane	**U**	ppbv	5.4	16	V409C11A	3/11/2009	3/11/2009	BAG
Dibromochloromethane	**U**	ppbv	5.9	16	V409C11A	3/11/2009	3/11/2009	BAG
1,2-Dichlorobenzene	**U**	ppbv	6.1	16	V409C11A	3/11/2009	3/11/2009	BAG
1,3-Dichlorobenzene	**U**	ppbv	6.1	16	V409C11A	3/11/2009	3/11/2009	BAG
1,4-Dichlorobenzene	**U**	ppbv	6.1	16	V409C11A	3/11/2009	3/11/2009	BAG
Dichlorodifluoromethane	**U**	ppbv	5.6	16	V409C11A	3/11/2009	3/11/2009	BAG

Analytical Laboratory Report

Client Identification:	**Envirologic Technologies, Inc.**	Sample Matrix:	**Air**
Fibertec Project Number:	**33098**	Sample Number:	**33098-027**

Client Sample Information

Project Identification:	**Kzoo Co**	Client Sample Description:	**SUB-7**
Project Number:	**080503**	Client Sample Number:	**27**
Sample Date:	**3/6/2009**	Chain of Custody Number:	**82432**

Comments:

Definitions/ Qualifiers:

A: Spike recovery or precision unusable due to dilution.
B: The analyte was detected in the associated method blank.
E: The analyte was detected at a concentration greater than the calibration range, therefore the result is estimated.
J: The concentration is an estimated value.
U: The analyte was not detected at or above the reporting limit.
X: Matrix Interference has resulted in a raised reporting limit or distorted result.
W: Results reported on a wet-weight basis.
*: Value reported is outside QA limits

Analyte	Result	Units	Report Limit	Dilution Factor	Prep Batch	Prep Date/Time	Analysis Date/Time	Analyst
TO-15 (TO-15)								
1,1-Dichloroethane	**U**	ppbv	5.9	16	V409C11A	3/11/2009	3/11/2009	BAG
1,2-Dichloroethane	**U**	ppbv	5.9	16	V409C11A	3/11/2009	3/11/2009	BAG
1,1-Dichloroethene	**U**	ppbv	5.8	16	V409C11A	3/11/2009	3/11/2009	BAG
cis-1,2-Dichloroethene	**U**	ppbv	6.1	16	V409C11A	3/11/2009	3/11/2009	BAG
trans-1,2-Dichloroethene	**U**	ppbv	5.3	16	V409C11A	3/11/2009	3/11/2009	BAG
1,2-Dichloropropane	**U**	ppbv	18	16	V409C11A	3/11/2009	3/11/2009	BAG
cis-1,3-Dichloropropene	**U**	ppbv	5.8	16	V409C11A	3/11/2009	3/11/2009	BAG
trans-1,3-Dichloropropene	**U**	ppbv	6.4	16	V409C11A	3/11/2009	3/11/2009	BAG
1,4-Dioxane	**U**	ppbv	5.9	16	V409C11A	3/11/2009	3/11/2009	BAG
Ethyl Acetate	**U**	ppbv	16	16	V409C11A	3/11/2009	3/11/2009	BAG
Ethylbenzene	**U**	ppbv	6.1	16	V409C11A	3/11/2009	3/11/2009	BAG
Ethylene Dibromide	**U**	ppbv	5.8	16	V409C11A	3/11/2009	3/11/2009	BAG
4-Ethyltoluene	**U**	ppbv	6.1	16	V409C11A	3/11/2009	3/11/2009	BAG
n-Heptane	**U**	ppbv	5.6	16	V409C11A	3/11/2009	3/11/2009	BAG
Hexachlorobutadiene	**U**	ppbv	6.1	16	V409C11A	3/11/2009	3/11/2009	BAG
n-Hexane	**U**	ppbv	5.3	16	V409C11A	3/11/2009	3/11/2009	BAG
2-Hexanone	**U**	ppbv	18	16	V409C11A	3/11/2009	3/11/2009	BAG
Isopropyl Alcohol	**70**	ppbv	5.9	16	V409C11A	3/11/2009	3/11/2009	BAG
Methylene Chloride	**U**	ppbv	6.7	18	V409C11A	3/11/2009	3/11/2009	BAG
4-Methyl-2-pentanone	**U**	ppbv	6.1	16	V409C11A	3/11/2009	3/11/2009	BAG

Analytical Laboratory Report

Client Identification:	**Envirologic Technologies, Inc.**	Sample Matrix:	**Air**
Fibertec Project Number:	**33098**	Sample Number:	**33098-027**

Client Sample Information

Project Identification:	**Kzoo Co**	Client Sample Description:	**SUB-7**
Project Number:	**080503**	Client Sample Number:	**27**
Sample Date:	**3/6/2009**	Chain of Custody Number:	**82432**

Comments:

Definitions/ Qualifiers:

A: Spike recovery or precision unusable due to dilution.
B: The analyte was detected in the associated method blank.
E: The analyte was detected at a concentration greater than the calibration range, therefore the result is estimated.
J: The concentration is an estimated value.
U: The analyte was not detected at or above the reporting limit.
X: Matrix Interference has resulted in a raised reporting limit or distorted result.
W: Results reported on a wet-weight basis.
*: Value reported is outside QA limits

Analyte	Result	Units	Report Limit	Dilution Factor	Prep Batch	Prep Date/Time	Analysis Date/Time	Analyst
TO-15 (TO-15)								
MTBE	**U**	ppbv	5.6	16	V409C11A	3/11/2009	3/11/2009	BAG
Propylene	**14**	ppbv	5.8	16	V409C11A	3/11/2009	3/11/2009	BAG
Styrene	**U**	ppbv	6.1	16	V409C11A	3/11/2009	3/11/2009	BAG
1,1,2,2-Tetrachloroethane	**U**	ppbv	6.1	16	V409C11A	3/11/2009	3/11/2009	BAG
Tetrachloroethene	**U**	ppbv	5.9	16	V409C11A	3/11/2009	3/11/2009	BAG
Tetrahydrofuran	**U**	ppbv	17	16	V409C11A	3/11/2009	3/11/2009	BAG
Toluene	**U**	ppbv	6.1	16	V409C11A	3/11/2009	3/11/2009	BAG
1,2,4-Trichlorobenzene	**U**	ppbv	6.1	16	V409C11A	3/11/2009	3/11/2009	BAG
1,1,1-Trichloroethane	**U**	ppbv	5.9	16	V409C11A	3/11/2009	3/11/2009	BAG
1,1,2-Trichloroethane	**U**	ppbv	6.1	16	V409C11A	3/11/2009	3/11/2009	BAG
Trichloroethene	**U**	ppbv	5.9	16	V409C11A	3/11/2009	3/11/2009	BAG
Trichlorofluoromethane	**U**	ppbv	5.4	16	V409C11A	3/11/2009	3/11/2009	BAG
1,1,2-Trichloro-1,2,2-trifluoroethane	**U**	ppbv	5.8	16	V409C11A	3/11/2009	3/11/2009	BAG
1,2,4-Trimethylbenzene	**U**	ppbv	6.1	16	V409C11A	3/11/2009	3/11/2009	BAG
1,3,5-Trimethylbenzene	**U**	ppbv	6.1	16	V409C11A	3/11/2009	3/11/2009	BAG
Vinyl Acetate	**U**	ppbv	18	16	V409C11A	3/11/2009	3/11/2009	BAG
Vinyl Chloride	**U**	ppbv	5.6	16	V409C11A	3/11/2009	3/11/2009	BAG
m&p-Xylene	**U**	ppbv	12	16	V409C11A	3/11/2009	3/11/2009	BAG
o-Xylene	**U**	ppbv	6.1	16	V409C11A	3/11/2009	3/11/2009	BAG

Analytical Laboratory Report

Client Identification:	**Envirologic Technologies, Inc.**	Sample Matrix:	**Air**
Fibertec Project Number:	**33098**	Sample Number:	**33098-028**

Client Sample Information

Project Identification:	**Kzoo Co**	Client Sample Description:	**SUB-6**
Project Number:	**080503**	Client Sample Number:	**28**
Sample Date:	**3/6/2009**	Chain of Custody Number:	**82432**

Comments:

Definitions/ Qualifiers:

A: Spike recovery or precision unusable due to dilution.
B: The analyte was detected in the associated method blank.
E: The analyte was detected at a concentration greater than the calibration range, therefore the result is estimated.
J: The concentration is an estimated value.
U: The analyte was not detected at or above the reporting limit.
X: Matrix Interference has resulted in a raised reporting limit or distorted result.
W: Results reported on a wet-weight basis.
*: Value reported is outside QA limits

Analyte	Result	Units	Report Limit	Dilution Factor	Prep Batch	Prep Date/Time	Analysis Date/Time	Analyst
TO-15 (TO-15)								
Acetone	**U**	ppbv	5.1	15	V409C11A	3/11/2009	3/11/2009	BAG
Benzene	**U**	ppbv	5.7	15	V409C11A	3/11/2009	3/11/2009	BAG
Benzyl Chloride	**U**	ppbv	5.7	15	V409C11A	3/11/2009	3/11/2009	BAG
Bromodichloromethane	**U**	ppbv	5.6	15	V409C11A	3/11/2009	3/11/2009	BAG
Bromoform	**U**	ppbv	5.7	15	V409C11A	3/11/2009	3/11/2009	BAG
Bromomethane	**U**	ppbv	16	15	V409C11A	3/11/2009	3/11/2009	BAG
1,3-Butadiene	**U**	ppbv	5.6	15	V409C11A	3/11/2009	3/11/2009	BAG
2-Butanone	**U**	ppbv	16	15	V409C11A	3/11/2009	3/11/2009	BAG
Carbon Disulfide	**U**	ppbv	5.3	15	V409C11A	3/11/2009	3/11/2009	BAG
Carbon Tetrachloride	**U**	ppbv	5.7	15	V409C11A	3/11/2009	3/11/2009	BAG
Chlorobenzene	**U**	ppbv	5.7	15	V409C11A	3/11/2009	3/11/2009	BAG
Chloroethane	**U**	ppbv	5.3	15	V409C11A	3/11/2009	3/11/2009	BAG
Chloroform	**U**	ppbv	5.0	15	V409C11A	3/11/2009	3/11/2009	BAG
Chloromethane	**U**	ppbv	16	15	V409C11A	3/11/2009	3/11/2009	BAG
Cyclohexane	**U**	ppbv	5.1	15	V409C11A	3/11/2009	3/11/2009	BAG
Dibromochloromethane	**U**	ppbv	5.6	15	V409C11A	3/11/2009	3/11/2009	BAG
1,2-Dichlorobenzene	**U**	ppbv	5.7	15	V409C11A	3/11/2009	3/11/2009	BAG
1,3-Dichlorobenzene	**U**	ppbv	5.7	15	V409C11A	3/11/2009	3/11/2009	BAG
1,4-Dichlorobenzene	**U**	ppbv	5.7	15	V409C11A	3/11/2009	3/11/2009	BAG
Dichlorodifluoromethane	**U**	ppbv	5.3	15	V409C11A	3/11/2009	3/11/2009	BAG

Analytical Laboratory Report

Client Identification:	**Envirologic Technologies, Inc.**	Sample Matrix:	**Air**
Fibertec Project Number:	**33098**	Sample Number:	**33098-028**

Client Sample Information

Project Identification:	**Kzoo Co**	Client Sample Description:	**SUB-6**
Project Number:	**080503**	Client Sample Number:	**28**
Sample Date:	**3/6/2009**	Chain of Custody Number:	**82432**

Comments:

Definitions/ Qualifiers:

A: Spike recovery or precision unusable due to dilution.
B: The analyte was detected in the associated method blank.
E: The analyte was detected at a concentration greater than the calibration range, therefore the result is estimated.
J: The concentration is an estimated value.
U: The analyte was not detected at or above the reporting limit.
X: Matrix Interference has resulted in a raised reporting limit or distorted result.
W: Results reported on a wet-weight basis.
*: Value reported is outside QA limits

Analyte	Result	Units	Report Limit	Dilution Factor	Prep Batch	Prep Date/Time	Analysis Date/Time	Analyst
TO-15 (TO-15)								
1,1-Dichloroethane	**U**	ppbv	5.6	15	V409C11A	3/11/2009	3/11/2009	BAG
1,2-Dichloroethane	**U**	ppbv	5.6	15	V409C11A	3/11/2009	3/11/2009	BAG
1,1-Dichloroethene	**U**	ppbv	5.4	15	V409C11A	3/11/2009	3/11/2009	BAG
cis-1,2-Dichloroethene	**U**	ppbv	5.7	15	V409C11A	3/11/2009	3/11/2009	BAG
trans-1,2-Dichloroethene	**U**	ppbv	5.0	15	V409C11A	3/11/2009	3/11/2009	BAG
1,2-Dichloropropane	**U**	ppbv	17	15	V409C11A	3/11/2009	3/11/2009	BAG
cis-1,3-Dichloropropene	**U**	ppbv	5.4	15	V409C11A	3/11/2009	3/11/2009	BAG
trans-1,3-Dichloropropene	**U**	ppbv	6.0	15	V409C11A	3/11/2009	3/11/2009	BAG
1,4-Dioxane	**U**	ppbv	5.6	15	V409C11A	3/11/2009	3/11/2009	BAG
Ethyl Acetate	**U**	ppbv	15	15	V409C11A	3/11/2009	3/11/2009	BAG
Ethylbenzene	**U**	ppbv	5.7	15	V409C11A	3/11/2009	3/11/2009	BAG
Ethylene Dibromide	**U**	ppbv	5.4	15	V409C11A	3/11/2009	3/11/2009	BAG
4-Ethyltoluene	**U**	ppbv	5.7	15	V409C11A	3/11/2009	3/11/2009	BAG
n-Heptane	**U**	ppbv	5.3	15	V409C11A	3/11/2009	3/11/2009	BAG
Hexachlorobutadiene	**U**	ppbv	5.7	15	V409C11A	3/11/2009	3/11/2009	BAG
n-Hexane	**U**	ppbv	5.0	15	V409C11A	3/11/2009	3/11/2009	BAG
2-Hexanone	**U**	ppbv	17	15	V409C11A	3/11/2009	3/11/2009	BAG
Isopropyl Alcohol	**62**	ppbv	5.6	15	V409C11A	3/11/2009	3/11/2009	BAG
Methylene Chloride	**U**	ppbv	5.9	16	V409C11A	3/11/2009	3/11/2009	BAG
4-Methyl-2-pentanone	**U**	ppbv	5.7	15	V409C11A	3/11/2009	3/11/2009	BAG

Analytical Laboratory Report

Client Identification:	**Envirologic Technologies, Inc.**	Sample Matrix:	**Air**
Fibertec Project Number:	**33098**	Sample Number:	**33098-028**

Client Sample Information

Project Identification:	**Kzoo Co**	Client Sample Description:	**SUB-6**
Project Number:	**080503**	Client Sample Number:	**28**
Sample Date:	**3/6/2009**	Chain of Custody Number:	**82432**

Comments:

Definitions/ Qualifiers:

A: Spike recovery or precision unusable due to dilution.
B: The analyte was detected in the associated method blank.
E: The analyte was detected at a concentration greater than the calibration range, therefore the result is estimated.
J: The concentration is an estimated value.
U: The analyte was not detected at or above the reporting limit.
X: Matrix Interference has resulted in a raised reporting limit or distorted result.
W: Results reported on a wet-weight basis.
*: Value reported is outside QA limits

Analyte	Result	Units	Report Limit	Dilution Factor	Prep Batch	Prep Date/Time	Analysis Date/Time	Analyst
TO-15 (TO-15)								
MTBE	**U**	ppbv	5.3	15	V409C11A	3/11/2009	3/11/2009	BAG
Propylene	**U**	ppbv	5.4	15	V409C11A	3/11/2009	3/11/2009	BAG
Styrene	**U**	ppbv	5.7	15	V409C11A	3/11/2009	3/11/2009	BAG
1,1,2,2-Tetrachloroethane	**U**	ppbv	5.7	15	V409C11A	3/11/2009	3/11/2009	BAG
Tetrachloroethene	**U**	ppbv	5.6	15	V409C11A	3/11/2009	3/11/2009	BAG
Tetrahydrofuran	**U**	ppbv	16	15	V409C11A	3/11/2009	3/11/2009	BAG
Toluene	**U**	ppbv	5.7	15	V409C11A	3/11/2009	3/11/2009	BAG
1,2,4-Trichlorobenzene	**U**	ppbv	5.7	15	V409C11A	3/11/2009	3/11/2009	BAG
1,1,1-Trichloroethane	**U**	ppbv	5.6	15	V409C11A	3/11/2009	3/11/2009	BAG
1,1,2-Trichloroethane	**U**	ppbv	5.7	15	V409C11A	3/11/2009	3/11/2009	BAG
Trichloroethene	**U**	ppbv	5.6	15	V409C11A	3/11/2009	3/11/2009	BAG
Trichlorofluoromethane	**U**	ppbv	5.1	15	V409C11A	3/11/2009	3/11/2009	BAG
1,1,2-Trichloro-1,2,2-trifluoroethane	**U**	ppbv	5.4	15	V409C11A	3/11/2009	3/11/2009	BAG
1,2,4-Trimethylbenzene	**U**	ppbv	5.7	15	V409C11A	3/11/2009	3/11/2009	BAG
1,3,5-Trimethylbenzene	**U**	ppbv	5.7	15	V409C11A	3/11/2009	3/11/2009	BAG
Vinyl Acetate	**U**	ppbv	17	15	V409C11A	3/11/2009	3/11/2009	BAG
Vinyl Chloride	**U**	ppbv	5.3	15	V409C11A	3/11/2009	3/11/2009	BAG
m&p-Xylene	**U**	ppbv	11	15	V409C11A	3/11/2009	3/11/2009	BAG
o-Xylene	**U**	ppbv	5.7	15	V409C11A	3/11/2009	3/11/2009	BAG

Analytical Laboratory Report

Client Identification:	**Envirologic Technologies, Inc.**	Sample Matrix:	**Air**
Fibertec Project Number:	**33098**	Sample Number:	**33098-029**

Client Sample Information

Project Identification:	**Kzoo Co**	Client Sample Description:	**SUB-10**
Project Number:	**080503**	Client Sample Number:	**29**
Sample Date:	**3/6/2009**	Chain of Custody Number:	**82432**

Comments:

Definitions/ Qualifiers:

A: Spike recovery or precision unusable due to dilution.
B: The analyte was detected in the associated method blank.
E: The analyte was detected at a concentration greater than the calibration range, therefore the result is estimated.
J: The concentration is an estimated value.
U: The analyte was not detected at or above the reporting limit.
X: Matrix Interference has resulted in a raised reporting limit or distorted result.
W: Results reported on a wet-weight basis.
*: Value reported is outside QA limits

Analyte	Result	Units	Report Limit	Dilution Factor	Prep Batch	Prep Date/Time	Analysis Date/Time	Analyst
TO-15 (TO-15)								
Acetone	**U**	ppbv	6.1	18	V409C11A	3/11/2009	3/11/2009	BAG
Benzene	**U**	ppbv	5.3	14	V409C11A	3/11/2009	3/11/2009	BAG
Benzyl Chloride	**U**	ppbv	5.3	14	V409C11A	3/11/2009	3/11/2009	BAG
Bromodichloromethane	**U**	ppbv	5.2	14	V409C11A	3/11/2009	3/11/2009	BAG
Bromoform	**U**	ppbv	5.3	14	V409C11A	3/11/2009	3/11/2009	BAG
Bromomethane	**U**	ppbv	15	14	V409C11A	3/11/2009	3/11/2009	BAG
1,3-Butadiene	**U**	ppbv	5.2	14	V409C11A	3/11/2009	3/11/2009	BAG
2-Butanone	**U**	ppbv	15	14	V409C11A	3/11/2009	3/11/2009	BAG
Carbon Disulfide	**U**	ppbv	4.9	14	V409C11A	3/11/2009	3/11/2009	BAG
Carbon Tetrachloride	**U**	ppbv	5.3	14	V409C11A	3/11/2009	3/11/2009	BAG
Chlorobenzene	**U**	ppbv	5.3	14	V409C11A	3/11/2009	3/11/2009	BAG
Chloroethane	**U**	ppbv	4.9	14	V409C11A	3/11/2009	3/11/2009	BAG
Chloroform	**U**	ppbv	4.6	14	V409C11A	3/11/2009	3/11/2009	BAG
Chloromethane	**U**	ppbv	15	14	V409C11A	3/11/2009	3/11/2009	BAG
Cyclohexane	**U**	ppbv	4.8	14	V409C11A	3/11/2009	3/11/2009	BAG
Dibromochloromethane	**U**	ppbv	5.2	14	V409C11A	3/11/2009	3/11/2009	BAG
1,2-Dichlorobenzene	**U**	ppbv	5.3	14	V409C11A	3/11/2009	3/11/2009	BAG
1,3-Dichlorobenzene	**U**	ppbv	5.3	14	V409C11A	3/11/2009	3/11/2009	BAG
1,4-Dichlorobenzene	**U**	ppbv	5.3	14	V409C11A	3/11/2009	3/11/2009	BAG
Dichlorodifluoromethane	**U**	ppbv	4.9	14	V409C11A	3/11/2009	3/11/2009	BAG

Analytical Laboratory Report

Client Identification:	**Envirologic Technologies, Inc.**	Sample Matrix:	**Air**
Fibertec Project Number:	**33098**	Sample Number:	**33098-029**

Client Sample Information

Project Identification:	**Kzoo Co**	Client Sample Description:	**SUB-10**
Project Number:	**080503**	Client Sample Number:	**29**
Sample Date:	**3/6/2009**	Chain of Custody Number:	**82432**

Comments:

Definitions/ Qualifiers:

A: Spike recovery or precision unusable due to dilution.
B: The analyte was detected in the associated method blank.
E: The analyte was detected at a concentration greater than the calibration range, therefore the result is estimated.
J: The concentration is an estimated value.
U: The analyte was not detected at or above the reporting limit.
X: Matrix Interference has resulted in a raised reporting limit or distorted result.
W: Results reported on a wet-weight basis.
*: Value reported is outside QA limits

Analyte	Result	Units	Report Limit	Dilution Factor	Prep Batch	Prep Date/Time	Analysis Date/Time	Analyst
TO-15 (TO-15)								
1,1-Dichloroethane	**U**	ppbv	5.2	14	V409C11A	3/11/2009	3/11/2009	BAG
1,2-Dichloroethane	**U**	ppbv	5.2	14	V409C11A	3/11/2009	3/11/2009	BAG
1,1-Dichloroethene	**U**	ppbv	5.0	14	V409C11A	3/11/2009	3/11/2009	BAG
cis-1,2-Dichloroethene	**U**	ppbv	5.3	14	V409C11A	3/11/2009	3/11/2009	BAG
trans-1,2-Dichloroethene	**U**	ppbv	4.6	14	V409C11A	3/11/2009	3/11/2009	BAG
1,2-Dichloropropane	**U**	ppbv	16	14	V409C11A	3/11/2009	3/11/2009	BAG
cis-1,3-Dichloropropene	**U**	ppbv	5.0	14	V409C11A	3/11/2009	3/11/2009	BAG
trans-1,3-Dichloropropene	**U**	ppbv	5.6	14	V409C11A	3/11/2009	3/11/2009	BAG
1,4-Dioxane	**U**	ppbv	5.2	14	V409C11A	3/11/2009	3/11/2009	BAG
Ethyl Acetate	**U**	ppbv	14	14	V409C11A	3/11/2009	3/11/2009	BAG
Ethylbenzene	**U**	ppbv	5.3	14	V409C11A	3/11/2009	3/11/2009	BAG
Ethylene Dibromide	**U**	ppbv	5.0	14	V409C11A	3/11/2009	3/11/2009	BAG
4-Ethyltoluene	**U**	ppbv	5.3	14	V409C11A	3/11/2009	3/11/2009	BAG
n-Heptane	**U**	ppbv	4.9	14	V409C11A	3/11/2009	3/11/2009	BAG
Hexachlorobutadiene	**U**	ppbv	5.3	14	V409C11A	3/11/2009	3/11/2009	BAG
n-Hexane	**U**	ppbv	4.6	14	V409C11A	3/11/2009	3/11/2009	BAG
2-Hexanone	**U**	ppbv	16	14	V409C11A	3/11/2009	3/11/2009	BAG
Methylene Chloride	**U**	ppbv	5.2	14	V409C11A	3/11/2009	3/11/2009	BAG
4-Methyl-2-pentanone	**U**	ppbv	5.3	14	V409C11A	3/11/2009	3/11/2009	BAG
MTBE	**U**	ppbv	4.9	14	V409C11A	3/11/2009	3/11/2009	BAG

Analytical Laboratory Report

Client Identification:	**Envirologic Technologies, Inc.**	Sample Matrix:	**Air**
Fibertec Project Number:	**33098**	Sample Number:	**33098-029**

Client Sample Information

Project Identification:	**Kzoo Co**	Client Sample Description:	**SUB-10**
Project Number:	**080503**	Client Sample Number:	**29**
Sample Date:	**3/6/2009**	Chain of Custody Number:	**82432**

Comments:

Definitions/ Qualifiers:

A: Spike recovery or precision unusable due to dilution.
B: The analyte was detected in the associated method blank.
E: The analyte was detected at a concentration greater than the calibration range, therefore the result is estimated.
J: The concentration is an estimated value.
U: The analyte was not detected at or above the reporting limit.
X: Matrix Interference has resulted in a raised reporting limit or distorted result.
W: Results reported on a wet-weight basis.
*: Value reported is outside QA limits

Analyte	Result	Units	Report Limit	Dilution Factor	Prep Batch	Prep Date/Time	Analysis Date/Time	Analyst
TO-15 (TO-15)								
Propylene	**U**	ppbv	5.0	14	V409C11A	3/11/2009	3/11/2009	BAG
Styrene	**U**	ppbv	5.3	14	V409C11A	3/11/2009	3/11/2009	BAG
1,1,2,2-Tetrachloroethane	**U**	ppbv	5.3	14	V409C11A	3/11/2009	3/11/2009	BAG
Tetrachloroethene	**510**	ppbv	5.2	14	V409C11A	3/11/2009	3/11/2009	BAG
Tetrahydrofuran	**U**	ppbv	15	14	V409C11A	3/11/2009	3/11/2009	BAG
Toluene	**U**	ppbv	5.3	14	V409C11A	3/11/2009	3/11/2009	BAG
1,2,4-Trichlorobenzene	**U**	ppbv	5.3	14	V409C11A	3/11/2009	3/11/2009	BAG
1,1,1-Trichloroethane	**U**	ppbv	5.2	14	V409C11A	3/11/2009	3/11/2009	BAG
1,1,2-Trichloroethane	**U**	ppbv	5.3	14	V409C11A	3/11/2009	3/11/2009	BAG
Trichloroethene	**U**	ppbv	5.2	14	V409C11A	3/11/2009	3/11/2009	BAG
Trichlorofluoromethane	**U**	ppbv	4.8	14	V409C11A	3/11/2009	3/11/2009	BAG
1,1,2-Trichloro-1,2,2-trifluoroethane	**U**	ppbv	5.0	14	V409C11A	3/11/2009	3/11/2009	BAG
1,2,4-Trimethylbenzene	**U**	ppbv	5.3	14	V409C11A	3/11/2009	3/11/2009	BAG
1,3,5-Trimethylbenzene	**U**	ppbv	5.3	14	V409C11A	3/11/2009	3/11/2009	BAG
Vinyl Acetate	**U**	ppbv	16	14	V409C11A	3/11/2009	3/11/2009	BAG
Vinyl Chloride	**U**	ppbv	4.9	14	V409C11A	3/11/2009	3/11/2009	BAG
m&p-Xylene	**U**	ppbv	11	14	V409C11A	3/11/2009	3/11/2009	BAG
o-Xylene	**U**	ppbv	5.3	14	V409C11A	3/11/2009	3/11/2009	BAG

Analytical Laboratory Report

Client Identification:	**Envirologic Technologies, Inc.**	Sample Matrix:	**Air**
Fibertec Project Number:	**33098**	Sample Number:	**33098-030**

Client Sample Information

Project Identification:	**Kzoo Co**	Client Sample Description:	**SUB-12**
Project Number:	**080503**	Client Sample Number:	**30**
Sample Date:	**3/6/2009**	Chain of Custody Number:	**82432**

Comments:

Definitions/ Qualifiers:

A: Spike recovery or precision unusable due to dilution.
B: The analyte was detected in the associated method blank.
E: The analyte was detected at a concentration greater than the calibration range, therefore the result is estimated.
J: The concentration is an estimated value.
U: The analyte was not detected at or above the reporting limit.
X: Matrix Interference has resulted in a raised reporting limit or distorted result.
W: Results reported on a wet-weight basis.
*: Value reported is outside QA limits

Analyte	Result	Units	Report Limit	Dilution Factor	Prep Batch	Prep Date/Time	Analysis Date/Time	Analyst
TO-15 (TO-15)								
Acetone	**U**	ppbv	4.8	14	V409C11A	3/12/2009	3/12/2009	BAG
Benzene	**U**	ppbv	5.3	14	V409C11A	3/12/2009	3/12/2009	BAG
Benzyl Chloride	**U**	ppbv	5.3	14	V409C11A	3/12/2009	3/12/2009	BAG
Bromodichloromethane	**U**	ppbv	5.2	14	V409C11A	3/12/2009	3/12/2009	BAG
Bromoform	**U**	ppbv	5.3	14	V409C11A	3/12/2009	3/12/2009	BAG
Bromomethane	**U**	ppbv	15	14	V409C11A	3/12/2009	3/12/2009	BAG
1,3-Butadiene	**U**	ppbv	5.2	14	V409C11A	3/12/2009	3/12/2009	BAG
2-Butanone	**U**	ppbv	15	14	V409C11A	3/12/2009	3/12/2009	BAG
Carbon Disulfide	**U**	ppbv	4.9	14	V409C11A	3/12/2009	3/12/2009	BAG
Carbon Tetrachloride	**U**	ppbv	5.3	14	V409C11A	3/12/2009	3/12/2009	BAG
Chlorobenzene	**U**	ppbv	5.3	14	V409C11A	3/12/2009	3/12/2009	BAG
Chloroethane	**U**	ppbv	4.9	14	V409C11A	3/12/2009	3/12/2009	BAG
Chloroform	**U**	ppbv	4.6	14	V409C11A	3/12/2009	3/12/2009	BAG
Chloromethane	**U**	ppbv	15	14	V409C11A	3/12/2009	3/12/2009	BAG
Cyclohexane	**U**	ppbv	4.8	14	V409C11A	3/12/2009	3/12/2009	BAG
Dibromochloromethane	**U**	ppbv	5.2	14	V409C11A	3/12/2009	3/12/2009	BAG
1,2-Dichlorobenzene	**U**	ppbv	5.3	14	V409C11A	3/12/2009	3/12/2009	BAG
1,3-Dichlorobenzene	**U**	ppbv	5.3	14	V409C11A	3/12/2009	3/12/2009	BAG
1,4-Dichlorobenzene	**U**	ppbv	5.3	14	V409C11A	3/12/2009	3/12/2009	BAG
Dichlorodifluoromethane	**U**	ppbv	4.9	14	V409C11A	3/12/2009	3/12/2009	BAG

Analytical Laboratory Report

Client Identification:	**Envirologic Technologies, Inc.**	Sample Matrix:	**Air**
Fibertec Project Number:	**33098**	Sample Number:	**33098-030**

Client Sample Information

Project Identification:	**Kzoo Co**	Client Sample Description:	**SUB-12**
Project Number:	**080503**	Client Sample Number:	**30**
Sample Date:	**3/6/2009**	Chain of Custody Number:	**82432**

Comments:

Definitions/ Qualifiers:

A: Spike recovery or precision unusable due to dilution.
B: The analyte was detected in the associated method blank.
E: The analyte was detected at a concentration greater than the calibration range, therefore the result is estimated.
J: The concentration is an estimated value.
U: The analyte was not detected at or above the reporting limit.
X: Matrix Interference has resulted in a raised reporting limit or distorted result.
W: Results reported on a wet-weight basis.
*: Value reported is outside QA limits

Analyte	Result	Units	Report Limit	Dilution Factor	Prep Batch	Prep Date/Time	Analysis Date/Time	Analyst
TO-15 (TO-15)								
1,1-Dichloroethane	**U**	ppbv	5.2	14	V409C11A	3/12/2009	3/12/2009	BAG
1,2-Dichloroethane	**U**	ppbv	5.2	14	V409C11A	3/12/2009	3/12/2009	BAG
1,1-Dichloroethene	**U**	ppbv	5.0	14	V409C11A	3/12/2009	3/12/2009	BAG
cis-1,2-Dichloroethene	**U**	ppbv	5.3	14	V409C11A	3/12/2009	3/12/2009	BAG
trans-1,2-Dichloroethene	**U**	ppbv	4.6	14	V409C11A	3/12/2009	3/12/2009	BAG
1,2-Dichloropropane	**U**	ppbv	16	14	V409C11A	3/12/2009	3/12/2009	BAG
cis-1,3-Dichloropropene	**U**	ppbv	5.0	14	V409C11A	3/12/2009	3/12/2009	BAG
trans-1,3-Dichloropropene	**U**	ppbv	5.6	14	V409C11A	3/12/2009	3/12/2009	BAG
1,4-Dioxane	**U**	ppbv	5.2	14	V409C11A	3/12/2009	3/12/2009	BAG
Ethyl Acetate	**U**	ppbv	14	14	V409C11A	3/12/2009	3/12/2009	BAG
Ethylbenzene	**U**	ppbv	5.3	14	V409C11A	3/12/2009	3/12/2009	BAG
Ethylene Dibromide	**U**	ppbv	5.0	14	V409C11A	3/12/2009	3/12/2009	BAG
4-Ethyltoluene	**U**	ppbv	5.3	14	V409C11A	3/12/2009	3/12/2009	BAG
n-Heptane	**U**	ppbv	4.9	14	V409C11A	3/12/2009	3/12/2009	BAG
Hexachlorobutadiene	**U**	ppbv	5.3	14	V409C11A	3/12/2009	3/12/2009	BAG
n-Hexane	**U**	ppbv	4.6	14	V409C11A	3/12/2009	3/12/2009	BAG
2-Hexanone	**U**	ppbv	16	14	V409C11A	3/12/2009	3/12/2009	BAG
Isopropyl Alcohol	**55**	ppbv	5.2	14	V409C11A	3/12/2009	3/12/2009	BAG
Methylene Chloride	**U**	ppbv	5.2	14	V409C11A	3/12/2009	3/12/2009	BAG
4-Methyl-2-pentanone	**U**	ppbv	5.3	14	V409C11A	3/12/2009	3/12/2009	BAG

Analytical Laboratory Report

Client Identification:	**Envirologic Technologies, Inc.**	Sample Matrix:	**Air**
Fibertec Project Number:	**33098**	Sample Number:	**33098-030**

Client Sample Information

Project Identification:	**Kzoo Co**	Client Sample Description:	**SUB-12**
Project Number:	**080503**	Client Sample Number:	**30**
Sample Date:	**3/6/2009**	Chain of Custody Number:	**82432**

Comments:

Definitions/ Qualifiers:

A: Spike recovery or precision unusable due to dilution.
B: The analyte was detected in the associated method blank.
E: The analyte was detected at a concentration greater than the calibration range, therefore the result is estimated.
J: The concentration is an estimated value.
U: The analyte was not detected at or above the reporting limit.
X: Matrix Interference has resulted in a raised reporting limit or distorted result.
W: Results reported on a wet-weight basis.
*: Value reported is outside QA limits

Analyte	Result	Units	Report Limit	Dilution Factor	Prep Batch	Prep Date/Time	Analysis Date/Time	Analyst
TO-15 (TO-15)								
MTBE	**U**	ppbv	4.9	14	V409C11A	3/12/2009	3/12/2009	BAG
Propylene	**U**	ppbv	5.0	14	V409C11A	3/12/2009	3/12/2009	BAG
Styrene	**U**	ppbv	5.3	14	V409C11A	3/12/2009	3/12/2009	BAG
1,1,2,2-Tetrachloroethane	**U**	ppbv	5.3	14	V409C11A	3/12/2009	3/12/2009	BAG
Tetrachloroethene	**75**	ppbv	5.2	14	V409C11A	3/12/2009	3/12/2009	BAG
Tetrahydrofuran	**U**	ppbv	15	14	V409C11A	3/12/2009	3/12/2009	BAG
Toluene	**U**	ppbv	5.3	14	V409C11A	3/12/2009	3/12/2009	BAG
1,2,4-Trichlorobenzene	**U**	ppbv	5.3	14	V409C11A	3/12/2009	3/12/2009	BAG
1,1,1-Trichloroethane	**U**	ppbv	5.2	14	V409C11A	3/12/2009	3/12/2009	BAG
1,1,2-Trichloroethane	**U**	ppbv	5.3	14	V409C11A	3/12/2009	3/12/2009	BAG
Trichloroethene	**U**	ppbv	5.2	14	V409C11A	3/12/2009	3/12/2009	BAG
Trichlorofluoromethane	**U**	ppbv	4.8	14	V409C11A	3/12/2009	3/12/2009	BAG
1,1,2-Trichloro-1,2,2-trifluoroethane	**U**	ppbv	5.0	14	V409C11A	3/12/2009	3/12/2009	BAG
1,2,4-Trimethylbenzene	**U**	ppbv	5.3	14	V409C11A	3/12/2009	3/12/2009	BAG
1,3,5-Trimethylbenzene	**U**	ppbv	5.3	14	V409C11A	3/12/2009	3/12/2009	BAG
Vinyl Acetate	**U**	ppbv	16	14	V409C11A	3/12/2009	3/12/2009	BAG
Vinyl Chloride	**U**	ppbv	4.9	14	V409C11A	3/12/2009	3/12/2009	BAG
m&p-Xylene	**U**	ppbv	11	14	V409C11A	3/12/2009	3/12/2009	BAG
o-Xylene	**U**	ppbv	5.3	14	V409C11A	3/12/2009	3/12/2009	BAG

Analytical Laboratory Report

Client Identification:	**Envirologic Technologies, Inc.**	Sample Matrix:	**Air**
Fibertec Project Number:	**33098**	Sample Number:	**33098-031**

Client Sample Information

Project Identification:	**Kzoo Co**	Client Sample Description:	**SUB-14**
Project Number:	**080503**	Client Sample Number:	**31**
Sample Date:	**3/6/2009**	Chain of Custody Number:	**82432**

Comments:

Definitions/ Qualifiers:

A: Spike recovery or precision unusable due to dilution.
B: The analyte was detected in the associated method blank.
E: The analyte was detected at a concentration greater than the calibration range, therefore the result is estimated.
J: The concentration is an estimated value.
U: The analyte was not detected at or above the reporting limit.
X: Matrix Interference has resulted in a raised reporting limit or distorted result.
W: Results reported on a wet-weight basis.
*: Value reported is outside QA limits

Analyte	Result	Units	Report Limit	Dilution Factor	Prep Batch	Prep Date/Time	Analysis Date/Time	Analyst
TO-15 (TO-15)								
Acetone	**U**	ppbv	5.4	16	V409C11A	3/12/2009	3/12/2009	BAG
Benzene	**U**	ppbv	6.1	16	V409C11A	3/12/2009	3/12/2009	BAG
Benzyl Chloride	**U**	ppbv	6.1	16	V409C11A	3/12/2009	3/12/2009	BAG
Bromodichloromethane	**U**	ppbv	5.9	16	V409C11A	3/12/2009	3/12/2009	BAG
Bromoform	**U**	ppbv	6.1	16	V409C11A	3/12/2009	3/12/2009	BAG
Bromomethane	**U**	ppbv	17	16	V409C11A	3/12/2009	3/12/2009	BAG
1,3-Butadiene	**U**	ppbv	5.9	16	V409C11A	3/12/2009	3/12/2009	BAG
2-Butanone	**U**	ppbv	17	16	V409C11A	3/12/2009	3/12/2009	BAG
Carbon Disulfide	**U**	ppbv	5.6	16	V409C11A	3/12/2009	3/12/2009	BAG
Carbon Tetrachloride	**U**	ppbv	6.1	16	V409C11A	3/12/2009	3/12/2009	BAG
Chlorobenzene	**U**	ppbv	6.1	16	V409C11A	3/12/2009	3/12/2009	BAG
Chloroethane	**U**	ppbv	5.6	16	V409C11A	3/12/2009	3/12/2009	BAG
Chloroform	**U**	ppbv	5.3	16	V409C11A	3/12/2009	3/12/2009	BAG
Chloromethane	**U**	ppbv	17	16	V409C11A	3/12/2009	3/12/2009	BAG
Cyclohexane	**U**	ppbv	5.4	16	V409C11A	3/12/2009	3/12/2009	BAG
Dibromochloromethane	**U**	ppbv	5.9	16	V409C11A	3/12/2009	3/12/2009	BAG
1,2-Dichlorobenzene	**U**	ppbv	6.1	16	V409C11A	3/12/2009	3/12/2009	BAG
1,3-Dichlorobenzene	**U**	ppbv	6.1	16	V409C11A	3/12/2009	3/12/2009	BAG
1,4-Dichlorobenzene	**U**	ppbv	6.1	16	V409C11A	3/12/2009	3/12/2009	BAG
Dichlorodifluoromethane	**U**	ppbv	5.6	16	V409C11A	3/12/2009	3/12/2009	BAG

Analytical Laboratory Report

Client Identification:	**Envirologic Technologies, Inc.**	Sample Matrix:	**Air**
Fibertec Project Number:	**33098**	Sample Number:	**33098-031**

Client Sample Information

Project Identification:	**Kzoo Co**	Client Sample Description:	**SUB-14**
Project Number:	**080503**	Client Sample Number:	**31**
Sample Date:	**3/6/2009**	Chain of Custody Number:	**82432**

Comments:

Definitions/ Qualifiers:

A: Spike recovery or precision unusable due to dilution.
B: The analyte was detected in the associated method blank.
E: The analyte was detected at a concentration greater than the calibration range, therefore the result is estimated.
J: The concentration is an estimated value.
U: The analyte was not detected at or above the reporting limit.
X: Matrix Interference has resulted in a raised reporting limit or distorted result.
W: Results reported on a wet-weight basis.
*: Value reported is outside QA limits

Analyte	Result	Units	Report Limit	Dilution Factor	Prep Batch	Prep Date/Time	Analysis Date/Time	Analyst
TO-15 (TO-15)								
1,1-Dichloroethane	**U**	ppbv	5.9	16	V409C11A	3/12/2009	3/12/2009	BAG
1,2-Dichloroethane	**U**	ppbv	5.9	16	V409C11A	3/12/2009	3/12/2009	BAG
1,1-Dichloroethene	**U**	ppbv	5.8	16	V409C11A	3/12/2009	3/12/2009	BAG
cis-1,2-Dichloroethene	**U**	ppbv	6.1	16	V409C11A	3/12/2009	3/12/2009	BAG
trans-1,2-Dichloroethene	**U**	ppbv	5.3	16	V409C11A	3/12/2009	3/12/2009	BAG
1,2-Dichloropropane	**U**	ppbv	18	16	V409C11A	3/12/2009	3/12/2009	BAG
cis-1,3-Dichloropropene	**U**	ppbv	5.8	16	V409C11A	3/12/2009	3/12/2009	BAG
trans-1,3-Dichloropropene	**U**	ppbv	6.4	16	V409C11A	3/12/2009	3/12/2009	BAG
1,4-Dioxane	**U**	ppbv	5.9	16	V409C11A	3/12/2009	3/12/2009	BAG
Ethyl Acetate	**U**	ppbv	16	16	V409C11A	3/12/2009	3/12/2009	BAG
Ethylbenzene	**U**	ppbv	6.1	16	V409C11A	3/12/2009	3/12/2009	BAG
Ethylene Dibromide	**U**	ppbv	5.8	16	V409C11A	3/12/2009	3/12/2009	BAG
4-Ethyltoluene	**U**	ppbv	6.1	16	V409C11A	3/12/2009	3/12/2009	BAG
n-Heptane	**U**	ppbv	5.6	16	V409C11A	3/12/2009	3/12/2009	BAG
Hexachlorobutadiene	**U**	ppbv	6.1	16	V409C11A	3/12/2009	3/12/2009	BAG
n-Hexane	**U**	ppbv	5.3	16	V409C11A	3/12/2009	3/12/2009	BAG
2-Hexanone	**U**	ppbv	18	16	V409C11A	3/12/2009	3/12/2009	BAG
Isopropyl Alcohol	**70000**	ppbv	260	700	V409C12A	3/13/2009	3/13/2009	BAG
Methylene Chloride	**U**	ppbv	6.3	17	V409C11A	3/12/2009	3/12/2009	BAG
4-Methyl-2-pentanone	**U**	ppbv	6.1	16	V409C11A	3/12/2009	3/12/2009	BAG

Analytical Laboratory Report

Client Identification:	**Envirologic Technologies, Inc.**	Sample Matrix:	**Air**
Fibertec Project Number:	**33098**	Sample Number:	**33098-031**

Client Sample Information

Project Identification:	**Kzoo Co**	Client Sample Description:	**SUB-14**
Project Number:	**080503**	Client Sample Number:	**31**
Sample Date:	**3/6/2009**	Chain of Custody Number:	**82432**

Comments:

Definitions/ Qualifiers:

A: Spike recovery or precision unusable due to dilution.
B: The analyte was detected in the associated method blank.
E: The analyte was detected at a concentration greater than the calibration range, therefore the result is estimated.
J: The concentration is an estimated value.
U: The analyte was not detected at or above the reporting limit.
X: Matrix Interference has resulted in a raised reporting limit or distorted result.
W: Results reported on a wet-weight basis.
*: Value reported is outside QA limits

Analyte	Result	Units	Report Limit	Dilution Factor	Prep Batch	Prep Date/Time	Analysis Date/Time	Analyst
TO-15 (TO-15)								
MTBE	**U**	ppbv	5.6	16	V409C11A	3/12/2009	3/12/2009	BAG
Styrene	**U**	ppbv	6.1	16	V409C11A	3/12/2009	3/12/2009	BAG
1,1,2,2-Tetrachloroethane	**U**	ppbv	6.1	16	V409C11A	3/12/2009	3/12/2009	BAG
Tetrachloroethene	**82**	ppbv	5.9	16	V409C11A	3/12/2009	3/12/2009	BAG
Tetrahydrofuran	**U**	ppbv	17	16	V409C11A	3/12/2009	3/12/2009	BAG
Toluene	**U**	ppbv	6.1	16	V409C11A	3/12/2009	3/12/2009	BAG
1,2,4-Trichlorobenzene	**U**	ppbv	6.1	16	V409C11A	3/12/2009	3/12/2009	BAG
1,1,1-Trichloroethane	**U**	ppbv	5.9	16	V409C11A	3/12/2009	3/12/2009	BAG
1,1,2-Trichloroethane	**U**	ppbv	6.1	16	V409C11A	3/12/2009	3/12/2009	BAG
Trichloroethene	**U**	ppbv	5.9	16	V409C11A	3/12/2009	3/12/2009	BAG
Trichlorofluoromethane	**U**	ppbv	5.4	16	V409C11A	3/12/2009	3/12/2009	BAG
1,1,2-Trichloro-1,2,2-trifluoroethane	**U**	ppbv	5.8	16	V409C11A	3/12/2009	3/12/2009	BAG
1,2,4-Trimethylbenzene	**U**	ppbv	6.1	16	V409C11A	3/12/2009	3/12/2009	BAG
1,3,5-Trimethylbenzene	**U**	ppbv	6.1	16	V409C11A	3/12/2009	3/12/2009	BAG
Vinyl Acetate	**U**	ppbv	18	16	V409C11A	3/12/2009	3/12/2009	BAG
Vinyl Chloride	**U**	ppbv	5.6	16	V409C11A	3/12/2009	3/12/2009	BAG
m&p-Xylene	**U**	ppbv	12	16	V409C11A	3/12/2009	3/12/2009	BAG
o-Xylene	**U**	ppbv	6.1	16	V409C11A	3/12/2009	3/12/2009	BAG

Fibertec
Environmental
Services

March 16, 2009

Narrative

Customer: Envirologic Technologies, Inc.
Project Identification: Kzoo Co/080503
Fibertec Project Number: 33098

Sample Collection/ Receipt
The following samples were collected on March 3 and 6, 2009 and received by Fibertec on March 6, 2009.
14 Soils including blanks and MS/MSD
9 Waters including blanks and MS/MSD
8 Summa Canisters
All Samples were received on ice and in good condition.

Analysis
Analyses were conducted in accordance with chain of custody and within hold times.

All applicable quality assurance/ quality control parameters were within acceptance limits unless otherwise noted.

Volatiles
All water samples except the MS/MSD have estimated results for trans-1,4-dichloro-2-butene, compound failed low on CCV.

The following were reported with elevated reporting limits

Laboratory Number	Client ID	Analysis	Reason for elevated RL
33098-004	GSB-4@0.5'	PNA	Sample Matrix
33098-024	SUB-17	VOC	Sample Matrix
33098-025	SUB-8	VOC	Sample Matrix
33098-026	SUB-18	VOC	Sample Matrix
33098-027	SUB-7	VOC	Sample Matrix
33098-028	SUB-6	VOC	Sample Matrix
33098-029	SUB-10	VOC	Sample Matrix
33098-030	SUB-12	VOC	Sample Matrix
33098-031	SUB-14	VOC	Sample Matrix

Kylem Crandall
Authorized Signature

3/16/09
Date

1914 Holloway Drive Holt, Michigan 48842 Telephone: (517) 699-0345 Facsimile: (517) 699-0388
11766 Grand River Brighton, Michigan 48116 Telephone: (810) 220-3300 Facsimile: (810) 220-3311

Fibertec environmental services

Analytical Laboratory
1914 Holloway Drive
Holt, MI 48842
Phone: 517 699 0345
Fax: 517 699 0388
email: lab@fibertec.us

8660 S. Mackinaw Trail
Cadillac, MI 49601
Phone: 231 775 8368
Fax: 231 775 8584

Industrial Hygiene Services, Inc.
1914 Holloway Drive
Holt, MI 48842
Phone: 517 699 0345
Fax: 517 699 0382
email: asbestos@fibertec.us

Geoprobe
11766 E. Grand River
Brighton, MI 48116
Phone: 810 220 3300
Fax: 810 220 3311

Chain of Custody # 82430

Client Name: Envirologic Technologies, Inc.

Contact Person: Erik Peterson

Project Name/ Number: K200C0 / 080503

Purchase Order#

Turnaround: 24 hour RUSH (surcharge applies); 48 hour RUSH (surcharge applies); 72 hour RUSH (surcharge applies); X Standard (5-7 bus. days); Other: Specify

Matrix Code: S Soil; W Water; A Air; O Oil; P Wipe; GW Ground Water; SW Surface Water; WW Waste Water; X Other: Specify

Lab Sample #	Date	Time	Client Sample #	Client Sample Descriptor	MATRIX (SEE RIGHT CORNER FOR CODE)	# OF CONTAINERS	PRESERVED (Y/N)	VOCs (8260+)	PNAs	MI 10 Metals	Aluminum	MI 10 Metals (Dis)	Alum (Dis)					Remarks:
	3/3/09	11:15am		GSB-1 @ 0.5'	S	3	Y	X	X	X	X							
		12:00pm		GSB-2 @ 0.5'	S	3	Y	X	X	X	X							
		9:10am		GSB-3 @ 0.5'	S	3	Y	X	X	X	X							
		10:05am		GSB-4 @ 0.5'	S	3	Y	X	X	X	X							
		12:30pm		GSB-5 @ 0.5'	S	3	Y	X	X	X	X							
		1:55pm		GSB-6 @ 0.5	S	3	Y	X	X	X	X							
		2:30pm		GSB-7 @ 0.5'	S	3	Y	X	X	X	X							
		3:40pm		GSB-8 @ 0.5'	S	2	Y	X	X	X	X							
		5:30pm		GSB-9 @ 0.5'	S	2	Y	X	X	X	X							
		5:55pm		GSB-11 @ 0.5'	S	2	Y	X	X	X	X							

Comments:

Relinquished By:	Date/ Time	Received By:
Erik D. Peterson	3/06/09 2:50pm	B Gukeser
B Gukeser 1618		
		Received By Laboratory:

LAB USE ONLY:
Fibertec project number:
Laboratory Tracking:
Temperature at Receipt:

33098

COC Revision: April, 2006

TERMS & CONDITIONS ON BACK

Fibertec environmental services

Analytical Laboratory
1914 Holloway Drive
Holt, MI 48842
Phone: 517 699 0345
Fax: 517 699 0388
email: lab@fibertec.us

8660 S. Mackinaw Trail
Cadillac, MI 49601
Phone: 231 775 8368
Fax: 231 775 8584

Industrial Hygiene Services, Inc.
1914 Holloway Drive
Holt, MI 48842
Phone: 517 699 0345
Fax: 517 699 0382
email: asbestos@fibertec.us

Geoprobe
11766 E. Grand River
Brighton, MI 48116
Phone: 810 220 3300
Fax: 810 220 3311

Chain of Custody # 82431

Client Name: Envirologic Technologies, Inc.

Contact Person: Erik Peterson

Project Name/ Number: Kzooco / 080503

Purchase Order#

Turnaround: 24 hour RUSH (surcharge applies); 48 hour RUSH (surcharge applies); 72 hour RUSH (surcharge applies); X Standard (5-7 bus. days); Other: Specify

Matrix Code: S Soil; W Water; A Air; O Oil; P Wipe; GW Ground Water; SW Surface Water; WW Waste Water; X Other: Specify

Lab Sample #	Date	Time	Client Sample #	Client Sample Descriptor	MATRIX (SEE RIGHT CORNER FOR CODE)	# OF CONTAINERS	PRESERVED (Y/N)	VOCs (8260+)	PNAs	MI 10 Metals	Aluminum	MI 10 Metals (Dis.)	Alum (Dis)					Remarks:
	3/3/09	10:00am		GSB-3 @ 7-11'	W	4	Y	X	X			X	X					Field Filtered for Metals
		2:30pm		GSB-7 @ 3-7'	W	4	Y	X	X			X	X					Field Filtered for Metals
		4:50pm		GSB-10 @ 6-10'	W	4	Y	X	X			X	X					
		—		Duplicate-Soil	S	3	Y	X	X	X	X							
		3:40pm		GSB-8 @ 0.5' MS/MSD	S	4	Y	X	X	X	X							
		6:10pm		EB-Soil	W	2	Y	X										
		10:00am		GSB-3 @ 7-11' MS/MSD	W	8	Y	X	X			X	X					Field Filtered for Metals
		—		Duplicate-Groundwater	W	4	Y	X	X			X	X					Field Filtered for Metals
		5:15pm		EB-Groundwater	W	2	Y	X										
		—		Trip Blank	W	1	Y	X										

Comments:

Relinquished By: E.D. Peterson	Date/ Time 2:50pm 3/06/09	Received By: B Gukerson
Relinquished By: B Gukerson 1620	Date/ Time	Received By: [signature]
Relinquished By:	Date/ Time	Received By Laboratory:

LAB USE ONLY:
Fibertec project number:
Laboratory Tracking:
Temperature at Receipt:

COC Revision: April, 2006

TERMS & CONDITIONS ON BACK

Fibertec environmental services

Analytical Laboratory
1914 Holloway Drive
Holt, MI 48842
Phone: 517 699 0345
Fax: 517 699 0388
email: lab@fibertec.us

8660 S. Mackinaw Trail
Cadillac, MI 49601
Phone: 231 775 8368
Fax: 231 775 8584

Industrial Hygiene Services, Inc.
1914 Holloway Drive
Holt, MI 48842
Phone: 517 699 0345
Fax: 517 699 0382
email: asbestos@fibertec.us

Geoprobe
11766 E. Grand River
Brighton, MI 48116
Phone: 810 220 3300
Fax: 810 220 3311

Chain of Custody #
82432
PAGE 3 of 3

Client Name: Envirologic Technologies, Inc
Contact Person: Erik Peterson
Project Name/ Number: KzooCo / 080503
Purchase Order#

Lab Sample #	Date	Time	Client Sample #	Client Sample Descriptor	MATRIX (SEE RIGHT CORNER FOR CODE)	# OF CONTAINERS	PRESERVED (Y/N)	VOCs (8260+)	TO-15								Remarks:
	3/3/09			Methanol Blank		1	Y	X									
	3/6/09	9:52am		SUB-17'	A				X								
		10:00am		SUB-8	A				X								
		10:25am		SUB-18'	A				X								
		10:52am		SUB-7	A				X								
		11:02am		SUB-6	A				X								
		11:12am		SUB-10'	A				X								
		11:27am		SUB-12'	A				X								
		11:40am		SUB-14	A				X								

Turnaround:
- [ ] 24 hour RUSH (surcharge applies)
- [ ] 48 hour RUSH (surcharge applies)
- [ ] 72 hour RUSH (surcharge applies)
- [X] Standard (5-7 bus. days)
- [ ] Other: Specify

Matrix Code:
- S Soil
- W Water
- A Air
- O Oil
- P Wipe
- GW Ground Water
- SW Surface Water
- WW Waste Water
- X Other: Specify

Comments:

Relinquished By:	Date/ Time	Received By:
W. D. Peterson	3/06/09 2:50pm	B. Gukeson
B. Gukeson 1618		
	Date/ Time	Received By:
Relinquished By:	Date/ Time	Received By Laboratory:

LAB USE ONLY:
Fibertec project number:
Laboratory Tracking:
Temperature at Receipt:

COC Revision: April, 2006

TERMS & CONDITIONS ON BACK

Fibertec environmental services

Friday, March 20, 2009

Fibertec Project Number: 33140
Project Identification: Kzoo Co/080503
Submittal Date: 3/11/2009

Mr. Erik Peterson
Envirologic Technologies, Inc.
2960 Interstate Parkway
Kalamazoo, MI 49048

Dear Mr. Peterson,

Thank you for selecting Fibertec Environmental Services as your analytical laboratory. The samples you submitted have been analyzed by NELAC compliant methodologies and the results compiled in the attached report. Any exceptions to compliance are noted in the report. These results apply only to those samples submitted.

If you have any questions regarding these results or if we may be of further assistance to you, please contact me at (517) 699-0345. Please note samples will be disposed of 30 days after reporting date.

Sincerely,

Daryl P. Strandbergh
Laboratory Director

DPS/kc

Enclosures

1914 Holloway Drive	*Holt, MI 48842*	*T: (517) 699-0345*	*F: (517) 699-0388*
11766 E. Grand River	*Brighton, MI 48116*	*T: (810) 220-3300*	*F: (810) 220-3311*
8660 S. Mackinaw Trail	*Cadillac, MI 49601*	*T: (231) 775-8368*	*F: (231) 775-8584*

lab@fibertec.us

Analytical Laboratory Report

Client Identification:	**Envirologic Technologies, Inc.**	Sample Matrix:	**Air**
Fibertec Project Number:	**33140**	Sample Number:	**33140-001**

Client Sample Information

Project Identification:	**Kzoo Co**	Client Sample Description:	**SUB-15**
Project Number:	**080503**	Client Sample Number:	**1**
Sample Date:	**3/11/2009**	Chain of Custody Number:	**82433**

Comments:

Definitions/ Qualifiers:

A: Spike recovery or precision unusable due to dilution.
B: The analyte was detected in the associated method blank.
E: The analyte was detected at a concentration greater than the calibration range, therefore the result is estimated.
J: The concentration is an estimated value.
U: The analyte was not detected at or above the reporting limit.
X: Matrix Interference has resulted in a raised reporting limit or distorted result.
W: Results reported on a wet-weight basis.
*: Value reported is outside QA limits

Analyte	Result	Units	Report Limit	Dilution Factor	Prep Batch	Prep Date/Time	Analysis Date/Time	Analyst
TO-15 (TO-15)								
Acetone	**U**	ppbv	590	1728	V409C17A	3/14/2009	3/14/2009	BAG
Benzene	**U**	ppbv	6.1	16	V409C12A	3/12/2009	3/12/2009	BAG
Benzyl Chloride	**U**	ppbv	6.1	16	V409C12A	3/12/2009	3/12/2009	BAG
Bromodichloromethane	**U**	ppbv	5.9	16	V409C12A	3/12/2009	3/12/2009	BAG
Bromoform	**U**	ppbv	6.1	16	V409C12A	3/12/2009	3/12/2009	BAG
Bromomethane	**U**	ppbv	17	16	V409C12A	3/12/2009	3/12/2009	BAG
1,3-Butadiene	**U**	ppbv	5.9	16	V409C12A	3/12/2009	3/12/2009	BAG
2-Butanone	**U**	ppbv	110	100	V409C12A	3/12/2009	3/12/2009	BAG
Carbon Disulfide	**U**	ppbv	5.6	16	V409C12A	3/12/2009	3/12/2009	BAG
Carbon Tetrachloride	**U**	ppbv	6.1	16	V409C12A	3/12/2009	3/12/2009	BAG
Chlorobenzene	**U**	ppbv	6.1	16	V409C12A	3/12/2009	3/12/2009	BAG
Chloroethane	**U**	ppbv	5.6	16	V409C12A	3/12/2009	3/12/2009	BAG
Chloroform	**U**	ppbv	5.3	16	V409C12A	3/12/2009	3/12/2009	BAG
Chloromethane	**U**	ppbv	17	16	V409C12A	3/12/2009	3/12/2009	BAG
Cyclohexane	**U**	ppbv	5.4	16	V409C12A	3/12/2009	3/12/2009	BAG
Dibromochloromethane	**U**	ppbv	5.9	16	V409C12A	3/12/2009	3/12/2009	BAG
1,2-Dichlorobenzene	**U**	ppbv	6.1	16	V409C12A	3/12/2009	3/12/2009	BAG
1,3-Dichlorobenzene	**U**	ppbv	38	100	V409C12A	3/12/2009	3/12/2009	BAG
1,4-Dichlorobenzene	**U**	ppbv	38	100	V409C12A	3/12/2009	3/12/2009	BAG
Dichlorodifluoromethane	**U**	ppbv	5.6	16	V409C12A	3/12/2009	3/12/2009	BAG

Analytical Laboratory Report

Client Identification:	**Envirologic Technologies, Inc.**	Sample Matrix:	**Air**
Fibertec Project Number:	**33140**	Sample Number:	**33140-001**

Client Sample Information

Project Identification:	**Kzoo Co**	Client Sample Description:	**SUB-15**
Project Number:	**080503**	Client Sample Number:	**1**
Sample Date:	**3/11/2009**	Chain of Custody Number:	**82433**

Comments:

Definitions/ Qualifiers:

A: Spike recovery or precision unusable due to dilution.
B: The analyte was detected in the associated method blank.
E: The analyte was detected at a concentration greater than the calibration range, therefore the result is estimated.
J: The concentration is an estimated value.
U: The analyte was not detected at or above the reporting limit.
X: Matrix Interference has resulted in a raised reporting limit or distorted result.
W: Results reported on a wet-weight basis.
*: Value reported is outside QA limits

Analyte	Result	Units	Report Limit	Dilution Factor	Prep Batch	Prep Date/Time	Analysis Date/Time	Analyst
TO-15 (TO-15)								
1,1-Dichloroethane	**U**	ppbv	5.9	16	V409C12A	3/12/2009	3/12/2009	BAG
1,2-Dichloroethane	**U**	ppbv	5.9	16	V409C12A	3/12/2009	3/12/2009	BAG
1,1-Dichloroethene	**U**	ppbv	5.8	16	V409C12A	3/12/2009	3/12/2009	BAG
cis-1,2-Dichloroethene	**U**	ppbv	6.1	16	V409C12A	3/12/2009	3/12/2009	BAG
trans-1,2-Dichloroethene	**U**	ppbv	5.3	16	V409C12A	3/12/2009	3/12/2009	BAG
1,2-Dichloropropane	**U**	ppbv	18	16	V409C12A	3/12/2009	3/12/2009	BAG
cis-1,3-Dichloropropene	**U**	ppbv	5.8	16	V409C12A	3/12/2009	3/12/2009	BAG
trans-1,3-Dichloropropene	**U**	ppbv	6.4	16	V409C12A	3/12/2009	3/12/2009	BAG
1,4-Dioxane	**U**	ppbv	5.9	16	V409C12A	3/12/2009	3/12/2009	BAG
Ethyl Acetate	**U**	ppbv	16	16	V409C12A	3/12/2009	3/12/2009	BAG
Ethylbenzene	**U**	ppbv	6.1	16	V409C12A	3/12/2009	3/12/2009	BAG
Ethylene Dibromide	**U**	ppbv	5.8	16	V409C12A	3/12/2009	3/12/2009	BAG
4-Ethyltoluene	**U**	ppbv	38	100	V409C12A	3/12/2009	3/12/2009	BAG
n-Heptane	**U**	ppbv	5.6	16	V409C12A	3/12/2009	3/12/2009	BAG
Hexachlorobutadiene	**U**	ppbv	6.1	16	V409C12A	3/12/2009	3/12/2009	BAG
n-Hexane	**U**	ppbv	5.3	16	V409C12A	3/12/2009	3/12/2009	BAG
2-Hexanone	**U**	ppbv	18	16	V409C12A	3/12/2009	3/12/2009	BAG
Isopropyl Alcohol	**710000** E	ppbv	630	1700	V409C17A	3/14/2009	3/14/2009	BAG
Methylene Chloride	**U**	ppbv	5.9	16	V409C12A	3/12/2009	3/12/2009	BAG
4-Methyl-2-pentanone	**U**	ppbv	6.1	16	V409C12A	3/12/2009	3/12/2009	BAG

Analytical Laboratory Report

Client Identification:	**Envirologic Technologies, Inc.**	Sample Matrix:	**Air**
Fibertec Project Number:	**33140**	Sample Number:	**33140-001**

Client Sample Information

Project Identification:	**Kzoo Co**	Client Sample Description:	**SUB-15**
Project Number:	**080503**	Client Sample Number:	**1**
Sample Date:	**3/11/2009**	Chain of Custody Number:	**82433**

Comments:

Definitions/ Qualifiers:

A: Spike recovery or precision unusable due to dilution.
B: The analyte was detected in the associated method blank.
E: The analyte was detected at a concentration greater than the calibration range, therefore the result is estimated.
J: The concentration is an estimated value.
U: The analyte was not detected at or above the reporting limit.
X: Matrix Interference has resulted in a raised reporting limit or distorted result.
W: Results reported on a wet-weight basis.
*: Value reported is outside QA limits

Analyte	Result	Units	Report Limit	Dilution Factor	Prep Batch	Prep Date/Time	Analysis Date/Time	Analyst
TO-15 (TO-15)								
MTBE	**U**	ppbv	5.6	16	V409C12A	3/12/2009	3/12/2009	BAG
Propylene	**3200**	ppbv	720	2000	V409C17A	3/14/2009	3/14/2009	BAG
Styrene	**U**	ppbv	6.1	16	V409C12A	3/12/2009	3/12/2009	BAG
1,1,2,2-Tetrachloroethane	**U**	ppbv	6.1	16	V409C12A	3/12/2009	3/12/2009	BAG
Tetrachloroethene	**320**	ppbv	5.9	16	V409C12A	3/12/2009	3/12/2009	BAG
Tetrahydrofuran	**U**	ppbv	17	16	V409C12A	3/12/2009	3/12/2009	BAG
Toluene	**U**	ppbv	6.1	16	V409C12A	3/12/2009	3/12/2009	BAG
1,2,4-Trichlorobenzene	**U**	ppbv	6.1	16	V409C12A	3/12/2009	3/12/2009	BAG
1,1,1-Trichloroethane	**U**	ppbv	5.9	16	V409C12A	3/12/2009	3/12/2009	BAG
1,1,2-Trichloroethane	**U**	ppbv	6.1	16	V409C12A	3/12/2009	3/12/2009	BAG
Trichloroethene	**U**	ppbv	5.9	16	V409C12A	3/12/2009	3/12/2009	BAG
Trichlorofluoromethane	**U**	ppbv	5.4	16	V409C12A	3/12/2009	3/12/2009	BAG
1,1,2-Trichloro-1,2,2-trifluoroethane	**U**	ppbv	5.8	16	V409C12A	3/12/2009	3/12/2009	BAG
1,2,4-Trimethylbenzene	**U**	ppbv	6.1	16	V409C12A	3/12/2009	3/12/2009	BAG
1,3,5-Trimethylbenzene	**U**	ppbv	6.1	16	V409C12A	3/12/2009	3/12/2009	BAG
Vinyl Acetate	**U**	ppbv	18	16	V409C12A	3/12/2009	3/12/2009	BAG
Vinyl Chloride	**U**	ppbv	5.6	16	V409C12A	3/12/2009	3/12/2009	BAG
m&p-Xylene	**U**	ppbv	12	16	V409C12A	3/12/2009	3/12/2009	BAG
o-Xylene	**U**	ppbv	6.1	16	V409C12A	3/12/2009	3/12/2009	BAG

Analytical Laboratory Report

Client Identification:	**Envirologic Technologies, Inc.**	Sample Matrix:	**Air**
Fibertec Project Number:	**33140**	Sample Number:	**33140-002**

Client Sample Information

Project Identification:	**Kzoo Co**	Client Sample Description:	**SUB-13**
Project Number:	**080503**	Client Sample Number:	**2**
Sample Date:	**3/11/2009**	Chain of Custody Number:	**82433**

Comments:

Definitions/ Qualifiers:

A: Spike recovery or precision unusable due to dilution.
B: The analyte was detected in the associated method blank.
E: The analyte was detected at a concentration greater than the calibration range, therefore the result is estimated.
J: The concentration is an estimated value.
U: The analyte was not detected at or above the reporting limit.
X: Matrix Interference has resulted in a raised reporting limit or distorted result.
W: Results reported on a wet-weight basis.
*: Value reported is outside QA limits

Analyte	Result	Units	Report Limit	Dilution Factor	Prep Batch	Prep Date/Time	Analysis Date/Time	Analyst
TO-15 (TO-15)								
Acetone	**U**	ppbv	5.4	16	V409C13A	3/13/2009	3/13/2009	BAG
Benzene	**U**	ppbv	6.1	16	V409C12A	3/12/2009	3/12/2009	BAG
Benzyl Chloride	**U**	ppbv	6.1	16	V409C12A	3/12/2009	3/12/2009	BAG
Bromodichloromethane	**U**	ppbv	5.9	16	V409C12A	3/12/2009	3/12/2009	BAG
Bromoform	**U**	ppbv	6.1	16	V409C12A	3/12/2009	3/12/2009	BAG
Bromomethane	**U**	ppbv	17	16	V409C12A	3/12/2009	3/12/2009	BAG
1,3-Butadiene	**U**	ppbv	5.9	16	V409C12A	3/12/2009	3/12/2009	BAG
2-Butanone	**U**	ppbv	17	16	V409C12A	3/12/2009	3/12/2009	BAG
Carbon Disulfide	**U**	ppbv	5.6	16	V409C12A	3/12/2009	3/12/2009	BAG
Carbon Tetrachloride	**U**	ppbv	6.1	16	V409C12A	3/12/2009	3/12/2009	BAG
Chlorobenzene	**U**	ppbv	6.1	16	V409C12A	3/12/2009	3/12/2009	BAG
Chloroethane	**U**	ppbv	5.6	16	V409C12A	3/12/2009	3/12/2009	BAG
Chloroform	**U**	ppbv	5.3	16	V409C12A	3/12/2009	3/12/2009	BAG
Chloromethane	**U**	ppbv	17	16	V409C12A	3/12/2009	3/12/2009	BAG
Cyclohexane	**U**	ppbv	5.4	16	V409C12A	3/12/2009	3/12/2009	BAG
Dibromochloromethane	**U**	ppbv	5.9	16	V409C12A	3/12/2009	3/12/2009	BAG
1,2-Dichlorobenzene	**U**	ppbv	6.1	16	V409C12A	3/12/2009	3/12/2009	BAG
1,3-Dichlorobenzene	**U**	ppbv	6.1	16	V409C12A	3/12/2009	3/12/2009	BAG
1,4-Dichlorobenzene	**U**	ppbv	6.1	16	V409C12A	3/12/2009	3/12/2009	BAG
Dichlorodifluoromethane	**U**	ppbv	5.6	16	V409C12A	3/12/2009	3/12/2009	BAG

Analytical Laboratory Report

Client Identification:	**Envirologic Technologies, Inc.**	Sample Matrix:	**Air**
Fibertec Project Number:	**33140**	Sample Number:	**33140-002**

Client Sample Information

Project Identification:	**Kzoo Co**	Client Sample Description:	**SUB-13**
Project Number:	**080503**	Client Sample Number:	**2**
Sample Date:	**3/11/2009**	Chain of Custody Number:	**82433**

Comments:

Definitions/ Qualifiers:

A: Spike recovery or precision unusable due to dilution.
B: The analyte was detected in the associated method blank.
E: The analyte was detected at a concentration greater than the calibration range, therefore the result is estimated.
J: The concentration is an estimated value.
U: The analyte was not detected at or above the reporting limit.
X: Matrix Interference has resulted in a raised reporting limit or distorted result.
W: Results reported on a wet-weight basis.
*: Value reported is outside QA limits

Analyte	Result	Units	Report Limit	Dilution Factor	Prep Batch	Prep Date/Time	Analysis Date/Time	Analyst
TO-15 (TO-15)								
1,1-Dichloroethane	**U**	ppbv	5.9	16	V409C12A	3/12/2009	3/12/2009	BAG
1,2-Dichloroethane	**U**	ppbv	5.9	16	V409C12A	3/12/2009	3/12/2009	BAG
1,1-Dichloroethene	**U**	ppbv	5.8	16	V409C12A	3/12/2009	3/12/2009	BAG
cis-1,2-Dichloroethene	**U**	ppbv	6.1	16	V409C12A	3/12/2009	3/12/2009	BAG
trans-1,2-Dichloroethene	**U**	ppbv	5.3	16	V409C12A	3/12/2009	3/12/2009	BAG
1,2-Dichloropropane	**U**	ppbv	18	16	V409C12A	3/12/2009	3/12/2009	BAG
cis-1,3-Dichloropropene	**U**	ppbv	5.8	16	V409C12A	3/12/2009	3/12/2009	BAG
trans-1,3-Dichloropropene	**U**	ppbv	6.4	16	V409C12A	3/12/2009	3/12/2009	BAG
1,4-Dioxane	**U**	ppbv	5.9	16	V409C12A	3/12/2009	3/12/2009	BAG
Ethyl Acetate	**U**	ppbv	16	16	V409C12A	3/12/2009	3/12/2009	BAG
Ethylbenzene	**U**	ppbv	6.1	16	V409C12A	3/12/2009	3/12/2009	BAG
Ethylene Dibromide	**U**	ppbv	5.8	16	V409C12A	3/12/2009	3/12/2009	BAG
4-Ethyltoluene	**U**	ppbv	6.1	16	V409C12A	3/12/2009	3/12/2009	BAG
n-Heptane	**U**	ppbv	5.6	16	V409C12A	3/12/2009	3/12/2009	BAG
Hexachlorobutadiene	**U**	ppbv	6.1	16	V409C12A	3/12/2009	3/12/2009	BAG
n-Hexane	**U**	ppbv	5.3	16	V409C12A	3/12/2009	3/12/2009	BAG
2-Hexanone	**U**	ppbv	18	16	V409C12A	3/12/2009	3/12/2009	BAG
Isopropyl Alcohol	**910**	ppbv	5.9	16	V409C13A	3/13/2009	3/13/2009	BAG
Methylene Chloride	**U**	ppbv	12	32	V409C13A	3/13/2009	3/13/2009	BAG
4-Methyl-2-pentanone	**U**	ppbv	6.1	16	V409C12A	3/12/2009	3/12/2009	BAG

Analytical Laboratory Report

Client Identification:	**Envirologic Technologies, Inc.**	Sample Matrix:	**Air**
Fibertec Project Number:	**33140**	Sample Number:	**33140-002**

Client Sample Information

Project Identification:	**Kzoo Co**	Client Sample Description:	**SUB-13**
Project Number:	**080503**	Client Sample Number:	**2**
Sample Date:	**3/11/2009**	Chain of Custody Number:	**82433**

Comments:

Definitions/ Qualifiers:

A: Spike recovery or precision unusable due to dilution.
B: The analyte was detected in the associated method blank.
E: The analyte was detected at a concentration greater than the calibration range, therefore the result is estimated.
J: The concentration is an estimated value.
U: The analyte was not detected at or above the reporting limit.
X: Matrix Interference has resulted in a raised reporting limit or distorted result.
W: Results reported on a wet-weight basis.
*: Value reported is outside QA limits

Analyte	Result	Units	Report Limit	Dilution Factor	Prep Batch	Prep Date/Time	Analysis Date/Time	Analyst
TO-15 (TO-15)								
MTBE	**U**	ppbv	5.6	16	V409C12A	3/12/2009	3/12/2009	BAG
Propylene	**U**	ppbv	58	160	V409C13A	3/13/2009	3/13/2009	BAG
Styrene	**U**	ppbv	6.1	16	V409C12A	3/12/2009	3/12/2009	BAG
1,1,2,2-Tetrachloroethane	**U**	ppbv	6.1	16	V409C12A	3/12/2009	3/12/2009	BAG
Tetrachloroethene	**92**	ppbv	5.9	16	V409C12A	3/12/2009	3/12/2009	BAG
Tetrahydrofuran	**U**	ppbv	17	16	V409C12A	3/12/2009	3/12/2009	BAG
Toluene	**U**	ppbv	6.1	16	V409C12A	3/12/2009	3/12/2009	BAG
1,2,4-Trichlorobenzene	**U**	ppbv	6.1	16	V409C12A	3/12/2009	3/12/2009	BAG
1,1,1-Trichloroethane	**U**	ppbv	5.9	16	V409C12A	3/12/2009	3/12/2009	BAG
1,1,2-Trichloroethane	**U**	ppbv	6.1	16	V409C12A	3/12/2009	3/12/2009	BAG
Trichloroethene	**U**	ppbv	5.9	16	V409C12A	3/12/2009	3/12/2009	BAG
Trichlorofluoromethane	**U**	ppbv	5.4	16	V409C12A	3/12/2009	3/12/2009	BAG
1,1,2-Trichloro-1,2,2-trifluoroethane	**U**	ppbv	5.8	16	V409C12A	3/12/2009	3/12/2009	BAG
1,2,4-Trimethylbenzene	**U**	ppbv	6.1	16	V409C12A	3/12/2009	3/12/2009	BAG
1,3,5-Trimethylbenzene	**U**	ppbv	6.1	16	V409C12A	3/12/2009	3/12/2009	BAG
Vinyl Acetate	**U**	ppbv	18	16	V409C12A	3/12/2009	3/12/2009	BAG
Vinyl Chloride	**U**	ppbv	5.6	16	V409C12A	3/12/2009	3/12/2009	BAG
m&p-Xylene	**U**	ppbv	12	16	V409C12A	3/12/2009	3/12/2009	BAG
o-Xylene	**U**	ppbv	6.1	16	V409C12A	3/12/2009	3/12/2009	BAG

Analytical Laboratory Report

Client Identification:	**Envirologic Technologies, Inc.**	Sample Matrix:	**Air**
Fibertec Project Number:	**33140**	Sample Number:	**33140-003**

Client Sample Information

Project Identification:	**Kzoo Co**	Client Sample Description:	**SUB-11**
Project Number:	**080503**	Client Sample Number:	**3**
Sample Date:	**3/11/2009**	Chain of Custody Number:	**82433**

Comments:

Definitions/ Qualifiers:

A: Spike recovery or precision unusable due to dilution.
B: The analyte was detected in the associated method blank.
E: The analyte was detected at a concentration greater than the calibration range, therefore the result is estimated.
J: The concentration is an estimated value.
U: The analyte was not detected at or above the reporting limit.
X: Matrix Interference has resulted in a raised reporting limit or distorted result.
W: Results reported on a wet-weight basis.
*: Value reported is outside QA limits

Analyte	Result	Units	Report Limit	Dilution Factor	Prep Batch	Prep Date/Time	Analysis Date/Time	Analyst
TO-15 (TO-15)								
Acetone	**U**	ppbv	5.4	16	V409C12A	3/12/2009	3/12/2009	BAG
Benzene	**U**	ppbv	6.1	16	V409C12A	3/12/2009	3/12/2009	BAG
Benzyl Chloride	**U**	ppbv	6.1	16	V409C12A	3/12/2009	3/12/2009	BAG
Bromodichloromethane	**U**	ppbv	5.9	16	V409C12A	3/12/2009	3/12/2009	BAG
Bromoform	**U**	ppbv	6.1	16	V409C12A	3/12/2009	3/12/2009	BAG
Bromomethane	**U**	ppbv	17	16	V409C12A	3/12/2009	3/12/2009	BAG
1,3-Butadiene	**U**	ppbv	5.9	16	V409C12A	3/12/2009	3/12/2009	BAG
2-Butanone	**U**	ppbv	17	16	V409C12A	3/12/2009	3/12/2009	BAG
Carbon Disulfide	**U**	ppbv	5.6	16	V409C12A	3/12/2009	3/12/2009	BAG
Carbon Tetrachloride	**U**	ppbv	6.1	16	V409C12A	3/12/2009	3/12/2009	BAG
Chlorobenzene	**U**	ppbv	6.1	16	V409C12A	3/12/2009	3/12/2009	BAG
Chloroethane	**U**	ppbv	5.6	16	V409C12A	3/12/2009	3/12/2009	BAG
Chloroform	**U**	ppbv	5.3	16	V409C12A	3/12/2009	3/12/2009	BAG
Chloromethane	**U**	ppbv	17	16	V409C12A	3/12/2009	3/12/2009	BAG
Cyclohexane	**U**	ppbv	5.4	16	V409C12A	3/12/2009	3/12/2009	BAG
Dibromochloromethane	**U**	ppbv	5.9	16	V409C12A	3/12/2009	3/12/2009	BAG
1,2-Dichlorobenzene	**U**	ppbv	6.1	16	V409C12A	3/12/2009	3/12/2009	BAG
1,3-Dichlorobenzene	**U**	ppbv	6.1	16	V409C12A	3/12/2009	3/12/2009	BAG
1,4-Dichlorobenzene	**U**	ppbv	6.1	16	V409C12A	3/12/2009	3/12/2009	BAG
Dichlorodifluoromethane	**U**	ppbv	5.6	16	V409C12A	3/12/2009	3/12/2009	BAG

Analytical Laboratory Report

Client Identification:	**Envirologic Technologies, Inc.**	Sample Matrix:	**Air**
Fibertec Project Number:	**33140**	Sample Number:	**33140-003**

Client Sample Information

Project Identification:	**Kzoo Co**	Client Sample Description:	**SUB-11**
Project Number:	**080503**	Client Sample Number:	**3**
Sample Date:	**3/11/2009**	Chain of Custody Number:	**82433**

Comments:

Definitions/ Qualifiers:

A: Spike recovery or precision unusable due to dilution.
B: The analyte was detected in the associated method blank.
E: The analyte was detected at a concentration greater than the calibration range, therefore the result is estimated.
J: The concentration is an estimated value.
U: The analyte was not detected at or above the reporting limit.
X: Matrix Interference has resulted in a raised reporting limit or distorted result.
W: Results reported on a wet-weight basis.
*: Value reported is outside QA limits

Analyte	Result	Units	Report Limit	Dilution Factor	Prep Batch	Prep Date/Time	Analysis Date/Time	Analyst
TO-15 (TO-15)								
1,1-Dichloroethane	**U**	ppbv	5.9	16	V409C12A	3/12/2009	3/12/2009	BAG
1,2-Dichloroethane	**U**	ppbv	5.9	16	V409C12A	3/12/2009	3/12/2009	BAG
1,1-Dichloroethene	**U**	ppbv	5.8	16	V409C12A	3/12/2009	3/12/2009	BAG
cis-1,2-Dichloroethene	**U**	ppbv	6.1	16	V409C12A	3/12/2009	3/12/2009	BAG
trans-1,2-Dichloroethene	**U**	ppbv	5.3	16	V409C12A	3/12/2009	3/12/2009	BAG
1,2-Dichloropropane	**U**	ppbv	18	16	V409C12A	3/12/2009	3/12/2009	BAG
cis-1,3-Dichloropropene	**U**	ppbv	5.8	16	V409C12A	3/12/2009	3/12/2009	BAG
trans-1,3-Dichloropropene	**U**	ppbv	6.4	16	V409C12A	3/12/2009	3/12/2009	BAG
1,4-Dioxane	**U**	ppbv	5.9	16	V409C12A	3/12/2009	3/12/2009	BAG
Ethyl Acetate	**U**	ppbv	16	16	V409C12A	3/12/2009	3/12/2009	BAG
Ethylbenzene	**U**	ppbv	6.1	16	V409C12A	3/12/2009	3/12/2009	BAG
Ethylene Dibromide	**U**	ppbv	5.8	16	V409C12A	3/12/2009	3/12/2009	BAG
4-Ethyltoluene	**U**	ppbv	6.1	16	V409C12A	3/12/2009	3/12/2009	BAG
n-Heptane	**U**	ppbv	5.6	16	V409C12A	3/12/2009	3/12/2009	BAG
Hexachlorobutadiene	**U**	ppbv	6.1	16	V409C12A	3/12/2009	3/12/2009	BAG
n-Hexane	**U**	ppbv	5.3	16	V409C12A	3/12/2009	3/12/2009	BAG
2-Hexanone	**U**	ppbv	18	16	V409C12A	3/12/2009	3/12/2009	BAG
Isopropyl Alcohol	**20000**	ppbv	13000	35000	V409C13A	3/13/2009	3/13/2009	BAG
Methylene Chloride	**U**	ppbv	37	100	V409C12A	3/12/2009	3/12/2009	BAG
4-Methyl-2-pentanone	**U**	ppbv	6.1	16	V409C12A	3/12/2009	3/12/2009	BAG

Analytical Laboratory Report

Client Identification:	**Envirologic Technologies, Inc.**	Sample Matrix:	**Air**
Fibertec Project Number:	**33140**	Sample Number:	**33140-003**

Client Sample Information

Project Identification:	**Kzoo Co**	Client Sample Description:	**SUB-11**
Project Number:	**080503**	Client Sample Number:	**3**
Sample Date:	**3/11/2009**	Chain of Custody Number:	**82433**

Comments:

Definitions/ Qualifiers:

A: Spike recovery or precision unusable due to dilution.
B: The analyte was detected in the associated method blank.
E: The analyte was detected at a concentration greater than the calibration range, therefore the result is estimated.
J: The concentration is an estimated value.
U: The analyte was not detected at or above the reporting limit.
X: Matrix Interference has resulted in a raised reporting limit or distorted result.
W: Results reported on a wet-weight basis.
*: Value reported is outside QA limits

Analyte	Result	Units	Report Limit	Dilution Factor	Prep Batch	Prep Date/Time	Analysis Date/Time	Analyst
TO-15 (TO-15)								
MTBE	**U**	ppbv	5.6	16	V409C12A	3/12/2009	3/12/2009	BAG
Propylene	**U**	ppbv	360	1000	V409C12A	3/12/2009	3/12/2009	BAG
Styrene	**U**	ppbv	6.1	16	V409C12A	3/12/2009	3/12/2009	BAG
1,1,2,2-Tetrachloroethane	**U**	ppbv	6.1	16	V409C12A	3/12/2009	3/12/2009	BAG
Tetrachloroethene	**4000**	ppbv	5.9	16	V409C12A	3/12/2009	3/12/2009	BAG
Tetrahydrofuran	**U**	ppbv	17	16	V409C12A	3/12/2009	3/12/2009	BAG
Toluene	**U**	ppbv	6.1	16	V409C12A	3/12/2009	3/12/2009	BAG
1,2,4-Trichlorobenzene	**U**	ppbv	6.1	16	V409C12A	3/12/2009	3/12/2009	BAG
1,1,1-Trichloroethane	**U**	ppbv	5.9	16	V409C12A	3/12/2009	3/12/2009	BAG
1,1,2-Trichloroethane	**U**	ppbv	6.1	16	V409C12A	3/12/2009	3/12/2009	BAG
Trichloroethene	**U**	ppbv	37	100	V409C12A	3/12/2009	3/12/2009	BAG
Trichlorofluoromethane	**U**	ppbv	5.4	16	V409C12A	3/12/2009	3/12/2009	BAG
1,1,2-Trichloro-1,2,2-trifluoroethane	**U**	ppbv	5.8	16	V409C12A	3/12/2009	3/12/2009	BAG
1,2,4-Trimethylbenzene	**U**	ppbv	6.1	16	V409C12A	3/12/2009	3/12/2009	BAG
1,3,5-Trimethylbenzene	**U**	ppbv	6.1	16	V409C12A	3/12/2009	3/12/2009	BAG
Vinyl Acetate	**U**	ppbv	18	16	V409C12A	3/12/2009	3/12/2009	BAG
Vinyl Chloride	**U**	ppbv	5.6	16	V409C12A	3/12/2009	3/12/2009	BAG
m&p-Xylene	**U**	ppbv	12	16	V409C12A	3/12/2009	3/12/2009	BAG
o-Xylene	**U**	ppbv	6.1	16	V409C12A	3/12/2009	3/12/2009	BAG

Analytical Laboratory Report

Client Identification:	**Envirologic Technologies, Inc.**	Sample Matrix:	**Air**
Fibertec Project Number:	**33140**	Sample Number:	**33140-004**

Client Sample Information

Project Identification:	**Kzoo Co**	Client Sample Description:	**SUB-9**
Project Number:	**080503**	Client Sample Number:	**4**
Sample Date:	**3/11/2009**	Chain of Custody Number:	**82433**

Comments:

Definitions/ Qualifiers:

A: Spike recovery or precision unusable due to dilution.
B: The analyte was detected in the associated method blank.
E: The analyte was detected at a concentration greater than the calibration range, therefore the result is estimated.
J: The concentration is an estimated value.
U: The analyte was not detected at or above the reporting limit.
X: Matrix Interference has resulted in a raised reporting limit or distorted result.
W: Results reported on a wet-weight basis.
*: Value reported is outside QA limits

Analyte	Result	Units	Report Limit	Dilution Factor	Prep Batch	Prep Date/Time	Analysis Date/Time	Analyst
TO-15 (TO-15)								
Acetone	**U**	ppbv	5.1	15	V409C12A	3/12/2009	3/12/2009	BAG
Benzene	**U**	ppbv	5.7	15	V409C12A	3/12/2009	3/12/2009	BAG
Benzyl Chloride	**U**	ppbv	5.7	15	V409C12A	3/12/2009	3/12/2009	BAG
Bromodichloromethane	**U**	ppbv	5.6	15	V409C12A	3/12/2009	3/12/2009	BAG
Bromoform	**U**	ppbv	5.7	15	V409C12A	3/12/2009	3/12/2009	BAG
Bromomethane	**U**	ppbv	16	15	V409C12A	3/12/2009	3/12/2009	BAG
1,3-Butadiene	**U**	ppbv	5.6	15	V409C12A	3/12/2009	3/12/2009	BAG
2-Butanone	**U**	ppbv	16	15	V409C12A	3/12/2009	3/12/2009	BAG
Carbon Disulfide	**U**	ppbv	5.3	15	V409C12A	3/12/2009	3/12/2009	BAG
Carbon Tetrachloride	**U**	ppbv	5.7	15	V409C12A	3/12/2009	3/12/2009	BAG
Chlorobenzene	**U**	ppbv	5.7	15	V409C12A	3/12/2009	3/12/2009	BAG
Chloroethane	**U**	ppbv	5.3	15	V409C12A	3/12/2009	3/12/2009	BAG
Chloroform	**U**	ppbv	5.0	15	V409C12A	3/12/2009	3/12/2009	BAG
Chloromethane	**U**	ppbv	16	15	V409C12A	3/12/2009	3/12/2009	BAG
Cyclohexane	**U**	ppbv	5.1	15	V409C12A	3/12/2009	3/12/2009	BAG
Dibromochloromethane	**U**	ppbv	5.6	15	V409C12A	3/12/2009	3/12/2009	BAG
1,2-Dichlorobenzene	**U**	ppbv	5.7	15	V409C12A	3/12/2009	3/12/2009	BAG
1,3-Dichlorobenzene	**U**	ppbv	5.7	15	V409C12A	3/12/2009	3/12/2009	BAG
1,4-Dichlorobenzene	**U**	ppbv	5.7	15	V409C12A	3/12/2009	3/12/2009	BAG
Dichlorodifluoromethane	**U**	ppbv	5.3	15	V409C12A	3/12/2009	3/12/2009	BAG

Analytical Laboratory Report

Client Identification:	**Envirologic Technologies, Inc.**	Sample Matrix:	**Air**
Fibertec Project Number:	**33140**	Sample Number:	**33140-004**

Client Sample Information

Project Identification:	**Kzoo Co**	Client Sample Description:	**SUB-9**
Project Number:	**080503**	Client Sample Number:	**4**
Sample Date:	**3/11/2009**	Chain of Custody Number:	**82433**

Comments:

Definitions/ Qualifiers:

A: Spike recovery or precision unusable due to dilution.
B: The analyte was detected in the associated method blank.
E: The analyte was detected at a concentration greater than the calibration range, therefore the result is estimated.
J: The concentration is an estimated value.
U: The analyte was not detected at or above the reporting limit.
X: Matrix Interference has resulted in a raised reporting limit or distorted result.
W: Results reported on a wet-weight basis.
*: Value reported is outside QA limits

Analyte	Result	Units	Report Limit	Dilution Factor	Prep Batch	Prep Date/Time	Analysis Date/Time	Analyst
TO-15 (TO-15)								
1,1-Dichloroethane	**U**	ppbv	5.6	15	V409C12A	3/12/2009	3/12/2009	BAG
1,2-Dichloroethane	**U**	ppbv	5.6	15	V409C12A	3/12/2009	3/12/2009	BAG
1,1-Dichloroethene	**U**	ppbv	5.4	15	V409C12A	3/12/2009	3/12/2009	BAG
cis-1,2-Dichloroethene	**U**	ppbv	5.7	15	V409C12A	3/12/2009	3/12/2009	BAG
trans-1,2-Dichloroethene	**U**	ppbv	5.0	15	V409C12A	3/12/2009	3/12/2009	BAG
1,2-Dichloropropane	**U**	ppbv	17	15	V409C12A	3/12/2009	3/12/2009	BAG
cis-1,3-Dichloropropene	**U**	ppbv	5.4	15	V409C12A	3/12/2009	3/12/2009	BAG
trans-1,3-Dichloropropene	**U**	ppbv	6.0	15	V409C12A	3/12/2009	3/12/2009	BAG
1,4-Dioxane	**U**	ppbv	5.6	15	V409C12A	3/12/2009	3/12/2009	BAG
Ethyl Acetate	**U**	ppbv	15	15	V409C12A	3/12/2009	3/12/2009	BAG
Ethylbenzene	**U**	ppbv	5.7	15	V409C12A	3/12/2009	3/12/2009	BAG
Ethylene Dibromide	**U**	ppbv	5.4	15	V409C12A	3/12/2009	3/12/2009	BAG
4-Ethyltoluene	**U**	ppbv	5.7	15	V409C12A	3/12/2009	3/12/2009	BAG
n-Heptane	**U**	ppbv	5.3	15	V409C12A	3/12/2009	3/12/2009	BAG
Hexachlorobutadiene	**U**	ppbv	5.7	15	V409C12A	3/12/2009	3/12/2009	BAG
n-Hexane	**U**	ppbv	5.0	15	V409C12A	3/12/2009	3/12/2009	BAG
2-Hexanone	**U**	ppbv	17	15	V409C12A	3/12/2009	3/12/2009	BAG
Isopropyl Alcohol	**2400**	ppbv	13	35	V409C17A	3/14/2009	3/14/2009	BAG
Methylene Chloride	**U**	ppbv	37	100	V409C12A	3/12/2009	3/12/2009	BAG
4-Methyl-2-pentanone	**U**	ppbv	5.7	15	V409C12A	3/12/2009	3/12/2009	BAG

Analytical Laboratory Report

Client Identification:	**Envirologic Technologies, Inc.**	Sample Matrix:	**Air**
Fibertec Project Number:	**33140**	Sample Number:	**33140-004**

Client Sample Information

Project Identification:	**Kzoo Co**	Client Sample Description:	**SUB-9**
Project Number:	**080503**	Client Sample Number:	**4**
Sample Date:	**3/11/2009**	Chain of Custody Number:	**82433**

Comments:

Definitions/ Qualifiers:

A: Spike recovery or precision unusable due to dilution.
B: The analyte was detected in the associated method blank.
E: The analyte was detected at a concentration greater than the calibration range, therefore the result is estimated.
J: The concentration is an estimated value.
U: The analyte was not detected at or above the reporting limit.
X: Matrix Interference has resulted in a raised reporting limit or distorted result.
W: Results reported on a wet-weight basis.
*: Value reported is outside QA limits

Analyte	Result	Units	Report Limit	Dilution Factor	Prep Batch	Prep Date/Time	Analysis Date/Time	Analyst
TO-15 (TO-15)								
MTBE	**U**	ppbv	5.3	15	V409C12A	3/12/2009	3/12/2009	BAG
Propylene	**U**	ppbv	360	1000	V409C12A	3/12/2009	3/12/2009	BAG
Styrene	**U**	ppbv	5.7	15	V409C12A	3/12/2009	3/12/2009	BAG
1,1,2,2-Tetrachloroethane	**U**	ppbv	5.7	15	V409C12A	3/12/2009	3/12/2009	BAG
Tetrachloroethene	**75**	ppbv	13	35	V409C17A	3/14/2009	3/14/2009	BAG
Tetrahydrofuran	**U**	ppbv	16	15	V409C12A	3/12/2009	3/12/2009	BAG
Toluene	**U**	ppbv	5.7	15	V409C12A	3/12/2009	3/12/2009	BAG
1,2,4-Trichlorobenzene	**U**	ppbv	5.7	15	V409C12A	3/12/2009	3/12/2009	BAG
1,1,1-Trichloroethane	**U**	ppbv	5.6	15	V409C12A	3/12/2009	3/12/2009	BAG
1,1,2-Trichloroethane	**U**	ppbv	5.7	15	V409C12A	3/12/2009	3/12/2009	BAG
Trichloroethene	**U**	ppbv	5.6	15	V409C12A	3/12/2009	3/12/2009	BAG
Trichlorofluoromethane	**U**	ppbv	5.1	15	V409C12A	3/12/2009	3/12/2009	BAG
1,1,2-Trichloro-1,2,2-trifluoroethane	**U**	ppbv	5.4	15	V409C12A	3/12/2009	3/12/2009	BAG
1,2,4-Trimethylbenzene	**U**	ppbv	5.7	15	V409C12A	3/12/2009	3/12/2009	BAG
1,3,5-Trimethylbenzene	**U**	ppbv	5.7	15	V409C12A	3/12/2009	3/12/2009	BAG
Vinyl Acetate	**U**	ppbv	17	15	V409C12A	3/12/2009	3/12/2009	BAG
Vinyl Chloride	**U**	ppbv	5.3	15	V409C12A	3/12/2009	3/12/2009	BAG
m&p-Xylene	**U**	ppbv	11	15	V409C12A	3/12/2009	3/12/2009	BAG
o-Xylene	**U**	ppbv	5.7	15	V409C12A	3/12/2009	3/12/2009	BAG

Analytical Laboratory Report

Client Identification:	**Envirologic Technologies, Inc.**	Sample Matrix:	**Air**
Fibertec Project Number:	**33140**	Sample Number:	**33140-005**

Client Sample Information

Project Identification:	**Kzoo Co**	Client Sample Description:	**SUB-3**
Project Number:	**080503**	Client Sample Number:	**5**
Sample Date:	**3/11/2009**	Chain of Custody Number:	**82433**

Comments:

Definitions/ Qualifiers:

A: Spike recovery or precision unusable due to dilution.
B: The analyte was detected in the associated method blank.
E: The analyte was detected at a concentration greater than the calibration range, therefore the result is estimated.
J: The concentration is an estimated value.
U: The analyte was not detected at or above the reporting limit.
X: Matrix Interference has resulted in a raised reporting limit or distorted result.
W: Results reported on a wet-weight basis.
*: Value reported is outside QA limits

Analyte	Result	Units	Report Limit	Dilution Factor	Prep Batch	Prep Date/Time	Analysis Date/Time	Analyst
TO-15 (TO-15)								
Acetone	**U**	ppbv	190	550	V409C13A	3/13/2009	3/13/2009	BAG
Benzene	**U**	ppbv	5.7	15	V409C12A	3/12/2009	3/12/2009	BAG
Benzyl Chloride	**U**	ppbv	5.7	15	V409C12A	3/12/2009	3/12/2009	BAG
Bromodichloromethane	**U**	ppbv	5.6	15	V409C12A	3/12/2009	3/12/2009	BAG
Bromoform	**U**	ppbv	5.7	15	V409C12A	3/12/2009	3/12/2009	BAG
Bromomethane	**U**	ppbv	16	15	V409C12A	3/12/2009	3/12/2009	BAG
1,3-Butadiene	**U**	ppbv	5.6	15	V409C12A	3/12/2009	3/12/2009	BAG
2-Butanone	**U**	ppbv	16	15	V409C12A	3/12/2009	3/12/2009	BAG
Carbon Disulfide	**U**	ppbv	5.3	15	V409C12A	3/12/2009	3/12/2009	BAG
Carbon Tetrachloride	**U**	ppbv	5.7	15	V409C12A	3/12/2009	3/12/2009	BAG
Chlorobenzene	**U**	ppbv	5.7	15	V409C12A	3/12/2009	3/12/2009	BAG
Chloroethane	**U**	ppbv	5.3	15	V409C12A	3/12/2009	3/12/2009	BAG
Chloroform	**U**	ppbv	5.0	15	V409C12A	3/12/2009	3/12/2009	BAG
Chloromethane	**U**	ppbv	16	15	V409C12A	3/12/2009	3/12/2009	BAG
Cyclohexane	**U**	ppbv	5.1	15	V409C12A	3/12/2009	3/12/2009	BAG
Dibromochloromethane	**U**	ppbv	5.6	15	V409C12A	3/12/2009	3/12/2009	BAG
1,2-Dichlorobenzene	**U**	ppbv	5.7	15	V409C12A	3/12/2009	3/12/2009	BAG
1,3-Dichlorobenzene	**U**	ppbv	5.7	15	V409C12A	3/12/2009	3/12/2009	BAG
1,4-Dichlorobenzene	**U**	ppbv	5.7	15	V409C12A	3/12/2009	3/12/2009	BAG
Dichlorodifluoromethane	**U**	ppbv	5.3	15	V409C12A	3/12/2009	3/12/2009	BAG

Analytical Laboratory Report

Client Identification:	**Envirologic Technologies, Inc.**	Sample Matrix:	**Air**
Fibertec Project Number:	**33140**	Sample Number:	**33140-005**

Client Sample Information

Project Identification:	**Kzoo Co**	Client Sample Description:	**SUB-3**
Project Number:	**080503**	Client Sample Number:	**5**
Sample Date:	**3/11/2009**	Chain of Custody Number:	**82433**

Comments:

Definitions/ Qualifiers:

A: Spike recovery or precision unusable due to dilution.
B: The analyte was detected in the associated method blank.
E: The analyte was detected at a concentration greater than the calibration range, therefore the result is estimated.
J: The concentration is an estimated value.
U: The analyte was not detected at or above the reporting limit.
X: Matrix Interference has resulted in a raised reporting limit or distorted result.
W: Results reported on a wet-weight basis.
*: Value reported is outside QA limits

Analyte	Result	Units	Report Limit	Dilution Factor	Prep Batch	Prep Date/Time	Analysis Date/Time	Analyst
TO-15 (TO-15)								
1,1-Dichloroethane	**U**	ppbv	5.6	15	V409C12A	3/12/2009	3/12/2009	BAG
1,2-Dichloroethane	**U**	ppbv	5.6	15	V409C12A	3/12/2009	3/12/2009	BAG
1,1-Dichloroethene	**U**	ppbv	5.4	15	V409C12A	3/12/2009	3/12/2009	BAG
cis-1,2-Dichloroethene	**U**	ppbv	5.7	15	V409C12A	3/12/2009	3/12/2009	BAG
trans-1,2-Dichloroethene	**U**	ppbv	5.0	15	V409C12A	3/12/2009	3/12/2009	BAG
1,2-Dichloropropane	**U**	ppbv	17	15	V409C12A	3/12/2009	3/12/2009	BAG
cis-1,3-Dichloropropene	**U**	ppbv	5.4	15	V409C12A	3/12/2009	3/12/2009	BAG
trans-1,3-Dichloropropene	**U**	ppbv	6.0	15	V409C12A	3/12/2009	3/12/2009	BAG
1,4-Dioxane	**U**	ppbv	5.6	15	V409C12A	3/12/2009	3/12/2009	BAG
Ethyl Acetate	**U**	ppbv	15	15	V409C12A	3/12/2009	3/12/2009	BAG
Ethylbenzene	**U**	ppbv	5.7	15	V409C12A	3/12/2009	3/12/2009	BAG
Ethylene Dibromide	**U**	ppbv	5.4	15	V409C12A	3/12/2009	3/12/2009	BAG
4-Ethyltoluene	**U**	ppbv	5.7	15	V409C12A	3/12/2009	3/12/2009	BAG
n-Heptane	**U**	ppbv	5.3	15	V409C12A	3/12/2009	3/12/2009	BAG
Hexachlorobutadiene	**U**	ppbv	5.7	15	V409C12A	3/12/2009	3/12/2009	BAG
n-Hexane	**U**	ppbv	5.0	15	V409C12A	3/12/2009	3/12/2009	BAG
2-Hexanone	**U**	ppbv	17	15	V409C12A	3/12/2009	3/12/2009	BAG
Isopropyl Alcohol	**730000** E	ppbv	560	1500	V409C17A	3/14/2009	3/14/2009	BAG
Methylene Chloride	**U**	ppbv	5.6	15	V409C12A	3/12/2009	3/12/2009	BAG
4-Methyl-2-pentanone	**U**	ppbv	5.7	15	V409C12A	3/12/2009	3/12/2009	BAG

Analytical Laboratory Report

Client Identification:	**Envirologic Technologies, Inc.**	Sample Matrix:	**Air**
Fibertec Project Number:	**33140**	Sample Number:	**33140-005**

Client Sample Information

Project Identification:	**Kzoo Co**	Client Sample Description:	**SUB-3**
Project Number:	**080503**	Client Sample Number:	**5**
Sample Date:	**3/11/2009**	Chain of Custody Number:	**82433**

Comments:

Definitions/ Qualifiers:

A: Spike recovery or precision unusable due to dilution.
B: The analyte was detected in the associated method blank.
E: The analyte was detected at a concentration greater than the calibration range, therefore the result is estimated.
J: The concentration is an estimated value.
U: The analyte was not detected at or above the reporting limit.
X: Matrix Interference has resulted in a raised reporting limit or distorted result.
W: Results reported on a wet-weight basis.
*: Value reported is outside QA limits

Analyte	Result	Units	Report Limit	Dilution Factor	Prep Batch	Prep Date/Time	Analysis Date/Time	Analyst
TO-15 (TO-15)								
MTBE	**U**	ppbv	5.3	15	V409C12A	3/12/2009	3/12/2009	BAG
Propylene	**21000**	ppbv	200	550	V409C13A	3/13/2009	3/13/2009	BAG
Styrene	**U**	ppbv	5.7	15	V409C12A	3/12/2009	3/12/2009	BAG
1,1,2,2-Tetrachloroethane	**U**	ppbv	5.7	15	V409C12A	3/12/2009	3/12/2009	BAG
Tetrachloroethene	**8200**	ppbv	200	550	V409C13A	3/13/2009	3/13/2009	BAG
Tetrahydrofuran	**U**	ppbv	16	15	V409C12A	3/12/2009	3/12/2009	BAG
Toluene	**U**	ppbv	5.7	15	V409C12A	3/12/2009	3/12/2009	BAG
1,2,4-Trichlorobenzene	**U**	ppbv	5.7	15	V409C12A	3/12/2009	3/12/2009	BAG
1,1,1-Trichloroethane	**U**	ppbv	5.6	15	V409C12A	3/12/2009	3/12/2009	BAG
1,1,2-Trichloroethane	**U**	ppbv	5.7	15	V409C12A	3/12/2009	3/12/2009	BAG
Trichloroethene	**U**	ppbv	37	100	V409C12A	3/12/2009	3/12/2009	BAG
Trichlorofluoromethane	**U**	ppbv	5.1	15	V409C12A	3/12/2009	3/12/2009	BAG
1,1,2-Trichloro-1,2,2-trifluoroethane	**U**	ppbv	5.4	15	V409C12A	3/12/2009	3/12/2009	BAG
1,2,4-Trimethylbenzene	**U**	ppbv	5.7	15	V409C12A	3/12/2009	3/12/2009	BAG
1,3,5-Trimethylbenzene	**U**	ppbv	5.7	15	V409C12A	3/12/2009	3/12/2009	BAG
Vinyl Acetate	**U**	ppbv	17	15	V409C12A	3/12/2009	3/12/2009	BAG
Vinyl Chloride	**U**	ppbv	5.3	15	V409C12A	3/12/2009	3/12/2009	BAG
m&p-Xylene	**U**	ppbv	11	15	V409C12A	3/12/2009	3/12/2009	BAG
o-Xylene	**U**	ppbv	5.7	15	V409C12A	3/12/2009	3/12/2009	BAG

Analytical Laboratory Report

Client Identification:	**Envirologic Technologies, Inc.**	Sample Matrix:	**Air**
Fibertec Project Number:	**33140**	Sample Number:	**33140-006**

Client Sample Information

Project Identification:	**Kzoo Co**	Client Sample Description:	**SUB-1**
Project Number:	**080503**	Client Sample Number:	**6**
Sample Date:	**3/11/2009**	Chain of Custody Number:	**82433**

Comments:

Definitions/ Qualifiers:

A: Spike recovery or precision unusable due to dilution.
B: The analyte was detected in the associated method blank.
E: The analyte was detected at a concentration greater than the calibration range, therefore the result is estimated.
J: The concentration is an estimated value.
U: The analyte was not detected at or above the reporting limit.
X: Matrix Interference has resulted in a raised reporting limit or distorted result.
W: Results reported on a wet-weight basis.
*: Value reported is outside QA limits

Analyte	Result	Units	Report Limit	Dilution Factor	Prep Batch	Prep Date/Time	Analysis Date/Time	Analyst
TO-15 (TO-15)								
Acetone	**U**	ppbv	5.1	15	V409C12A	3/12/2009	3/12/2009	BAG
Benzene	**U**	ppbv	5.7	15	V409C12A	3/12/2009	3/12/2009	BAG
Benzyl Chloride	**U**	ppbv	5.7	15	V409C12A	3/12/2009	3/12/2009	BAG
Bromodichloromethane	**U**	ppbv	5.6	15	V409C12A	3/12/2009	3/12/2009	BAG
Bromoform	**U**	ppbv	5.7	15	V409C12A	3/12/2009	3/12/2009	BAG
Bromomethane	**U**	ppbv	16	15	V409C12A	3/12/2009	3/12/2009	BAG
1,3-Butadiene	**U**	ppbv	5.6	15	V409C12A	3/12/2009	3/12/2009	BAG
2-Butanone	**U**	ppbv	16	15	V409C12A	3/12/2009	3/12/2009	BAG
Carbon Disulfide	**U**	ppbv	5.3	15	V409C12A	3/12/2009	3/12/2009	BAG
Carbon Tetrachloride	**U**	ppbv	5.7	15	V409C12A	3/12/2009	3/12/2009	BAG
Chlorobenzene	**U**	ppbv	5.7	15	V409C12A	3/12/2009	3/12/2009	BAG
Chloroethane	**U**	ppbv	5.3	15	V409C12A	3/12/2009	3/12/2009	BAG
Chloroform	**U**	ppbv	5.0	15	V409C12A	3/12/2009	3/12/2009	BAG
Chloromethane	**U**	ppbv	16	15	V409C12A	3/12/2009	3/12/2009	BAG
Cyclohexane	**U**	ppbv	5.1	15	V409C12A	3/12/2009	3/12/2009	BAG
Dibromochloromethane	**U**	ppbv	5.6	15	V409C12A	3/12/2009	3/12/2009	BAG
1,2-Dichlorobenzene	**U**	ppbv	5.7	15	V409C12A	3/12/2009	3/12/2009	BAG
1,3-Dichlorobenzene	**U**	ppbv	5.7	15	V409C12A	3/12/2009	3/12/2009	BAG
1,4-Dichlorobenzene	**U**	ppbv	5.7	15	V409C12A	3/12/2009	3/12/2009	BAG
Dichlorodifluoromethane	**U**	ppbv	5.3	15	V409C12A	3/12/2009	3/12/2009	BAG

Analytical Laboratory Report

Client Identification:	**Envirologic Technologies, Inc.**	Sample Matrix:	**Air**
Fibertec Project Number:	**33140**	Sample Number:	**33140-006**

Client Sample Information

Project Identification:	**Kzoo Co**	Client Sample Description:	**SUB-1**
Project Number:	**080503**	Client Sample Number:	**6**
Sample Date:	**3/11/2009**	Chain of Custody Number:	**82433**

Comments:

Definitions/ Qualifiers:

A: Spike recovery or precision unusable due to dilution.
B: The analyte was detected in the associated method blank.
E: The analyte was detected at a concentration greater than the calibration range, therefore the result is estimated.
J: The concentration is an estimated value.
U: The analyte was not detected at or above the reporting limit.
X: Matrix Interference has resulted in a raised reporting limit or distorted result.
W: Results reported on a wet-weight basis.
*: Value reported is outside QA limits

Analyte	Result	Units	Report Limit	Dilution Factor	Prep Batch	Prep Date/Time	Analysis Date/Time	Analyst
TO-15 (TO-15)								
1,1-Dichloroethane	**U**	ppbv	5.6	15	V409C12A	3/12/2009	3/12/2009	BAG
1,2-Dichloroethane	**U**	ppbv	5.6	15	V409C12A	3/12/2009	3/12/2009	BAG
1,1-Dichloroethene	**U**	ppbv	5.4	15	V409C12A	3/12/2009	3/12/2009	BAG
cis-1,2-Dichloroethene	**U**	ppbv	5.7	15	V409C12A	3/12/2009	3/12/2009	BAG
trans-1,2-Dichloroethene	**U**	ppbv	5.0	15	V409C12A	3/12/2009	3/12/2009	BAG
1,2-Dichloropropane	**U**	ppbv	17	15	V409C12A	3/12/2009	3/12/2009	BAG
cis-1,3-Dichloropropene	**U**	ppbv	5.4	15	V409C12A	3/12/2009	3/12/2009	BAG
trans-1,3-Dichloropropene	**U**	ppbv	6.0	15	V409C12A	3/12/2009	3/12/2009	BAG
1,4-Dioxane	**U**	ppbv	5.6	15	V409C12A	3/12/2009	3/12/2009	BAG
Ethyl Acetate	**U**	ppbv	15	15	V409C12A	3/12/2009	3/12/2009	BAG
Ethylbenzene	**U**	ppbv	5.7	15	V409C12A	3/12/2009	3/12/2009	BAG
Ethylene Dibromide	**U**	ppbv	5.4	15	V409C12A	3/12/2009	3/12/2009	BAG
4-Ethyltoluene	**U**	ppbv	5.7	15	V409C12A	3/12/2009	3/12/2009	BAG
n-Heptane	**U**	ppbv	5.3	15	V409C12A	3/12/2009	3/12/2009	BAG
Hexachlorobutadiene	**U**	ppbv	5.7	15	V409C12A	3/12/2009	3/12/2009	BAG
n-Hexane	**U**	ppbv	5.0	15	V409C12A	3/12/2009	3/12/2009	BAG
2-Hexanone	**U**	ppbv	17	15	V409C12A	3/12/2009	3/12/2009	BAG
Isopropyl Alcohol	**13000** E	ppbv	34	93	V409C17A	3/14/2009	3/14/2009	BAG
Methylene Chloride	**U**	ppbv	37	100	V409C12A	3/12/2009	3/12/2009	BAG
4-Methyl-2-pentanone	**U**	ppbv	5.7	15	V409C12A	3/12/2009	3/12/2009	BAG

Analytical Laboratory Report

Client Identification:	**Envirologic Technologies, Inc.**	Sample Matrix:	**Air**
Fibertec Project Number:	**33140**	Sample Number:	**33140-006**

Client Sample Information

Project Identification:	**Kzoo Co**	Client Sample Description:	**SUB-1**
Project Number:	**080503**	Client Sample Number:	**6**
Sample Date:	**3/11/2009**	Chain of Custody Number:	**82433**

Comments:

Definitions/ Qualifiers:

A: Spike recovery or precision unusable due to dilution.
B: The analyte was detected in the associated method blank.
E: The analyte was detected at a concentration greater than the calibration range, therefore the result is estimated.
J: The concentration is an estimated value.
U: The analyte was not detected at or above the reporting limit.
X: Matrix Interference has resulted in a raised reporting limit or distorted result.
W: Results reported on a wet-weight basis.
*: Value reported is outside QA limits

Analyte	Result	Units	Report Limit	Dilution Factor	Prep Batch	Prep Date/Time	Analysis Date/Time	Analyst
TO-15 (TO-15)								
MTBE	**U**	ppbv	5.3	15	V409C12A	3/12/2009	3/12/2009	BAG
Propylene	**U**	ppbv	180	500	V409C17A	3/14/2009	3/14/2009	BAG
Styrene	**U**	ppbv	5.7	15	V409C12A	3/12/2009	3/12/2009	BAG
1,1,2,2-Tetrachloroethane	**U**	ppbv	5.7	15	V409C12A	3/12/2009	3/12/2009	BAG
Tetrachloroethene	**3200**	ppbv	34	93	V409C17A	3/14/2009	3/14/2009	BAG
Tetrahydrofuran	**U**	ppbv	16	15	V409C12A	3/12/2009	3/12/2009	BAG
Toluene	**U**	ppbv	5.7	15	V409C12A	3/12/2009	3/12/2009	BAG
1,2,4-Trichlorobenzene	**U**	ppbv	5.7	15	V409C12A	3/12/2009	3/12/2009	BAG
1,1,1-Trichloroethane	**U**	ppbv	5.6	15	V409C12A	3/12/2009	3/12/2009	BAG
1,1,2-Trichloroethane	**U**	ppbv	5.7	15	V409C12A	3/12/2009	3/12/2009	BAG
Trichloroethene	**U**	ppbv	5.6	15	V409C12A	3/12/2009	3/12/2009	BAG
Trichlorofluoromethane	**U**	ppbv	5.1	15	V409C12A	3/12/2009	3/12/2009	BAG
1,1,2-Trichloro-1,2,2-trifluoroethane	**U**	ppbv	5.4	15	V409C12A	3/12/2009	3/12/2009	BAG
1,2,4-Trimethylbenzene	**U**	ppbv	5.7	15	V409C12A	3/12/2009	3/12/2009	BAG
1,3,5-Trimethylbenzene	**U**	ppbv	5.7	15	V409C12A	3/12/2009	3/12/2009	BAG
Vinyl Acetate	**U**	ppbv	17	15	V409C12A	3/12/2009	3/12/2009	BAG
Vinyl Chloride	**U**	ppbv	5.3	15	V409C12A	3/12/2009	3/12/2009	BAG
m&p-Xylene	**U**	ppbv	11	15	V409C12A	3/12/2009	3/12/2009	BAG
o-Xylene	**U**	ppbv	5.7	15	V409C12A	3/12/2009	3/12/2009	BAG

Analytical Laboratory Report

Client Identification:	**Envirologic Technologies, Inc.**	Sample Matrix:	**Air**
Fibertec Project Number:	**33140**	Sample Number:	**33140-007**

Client Sample Information

Project Identification:	**Kzoo Co**	Client Sample Description:	**SUB-2**
Project Number:	**080503**	Client Sample Number:	**7**
Sample Date:	**3/11/2009**	Chain of Custody Number:	**82433**

Comments:

Definitions/ Qualifiers:

A: Spike recovery or precision unusable due to dilution.
B: The analyte was detected in the associated method blank.
E: The analyte was detected at a concentration greater than the calibration range, therefore the result is estimated.
J: The concentration is an estimated value.
U: The analyte was not detected at or above the reporting limit.
X: Matrix Interference has resulted in a raised reporting limit or distorted result.
W: Results reported on a wet-weight basis.
*: Value reported is outside QA limits

Analyte	Result	Units	Report Limit	Dilution Factor	Prep Batch	Prep Date/Time	Analysis Date/Time	Analyst
TO-15 (TO-15)								
Acetone	**U**	ppbv	480	1400	V409C13A	3/13/2009	3/13/2009	BAG
Benzene	**U**	ppbv	6.1	16	V409C12A	3/12/2009	3/12/2009	BAG
Benzyl Chloride	**U**	ppbv	6.1	16	V409C12A	3/12/2009	3/12/2009	BAG
Bromodichloromethane	**U**	ppbv	5.9	16	V409C12A	3/12/2009	3/12/2009	BAG
Bromoform	**U**	ppbv	6.1	16	V409C12A	3/12/2009	3/12/2009	BAG
Bromomethane	**U**	ppbv	17	16	V409C12A	3/12/2009	3/12/2009	BAG
1,3-Butadiene	**U**	ppbv	5.9	16	V409C12A	3/12/2009	3/12/2009	BAG
2-Butanone	**U**	ppbv	17	16	V409C12A	3/12/2009	3/12/2009	BAG
Carbon Disulfide	**U**	ppbv	5.6	16	V409C12A	3/12/2009	3/12/2009	BAG
Carbon Tetrachloride	**U**	ppbv	6.1	16	V409C12A	3/12/2009	3/12/2009	BAG
Chlorobenzene	**U**	ppbv	6.1	16	V409C12A	3/12/2009	3/12/2009	BAG
Chloroethane	**U**	ppbv	5.6	16	V409C12A	3/12/2009	3/12/2009	BAG
Chloroform	**U**	ppbv	5.3	16	V409C12A	3/12/2009	3/12/2009	BAG
Chloromethane	**U**	ppbv	17	16	V409C12A	3/12/2009	3/12/2009	BAG
Cyclohexane	**U**	ppbv	5.4	16	V409C12A	3/12/2009	3/12/2009	BAG
Dibromochloromethane	**U**	ppbv	5.9	16	V409C12A	3/12/2009	3/12/2009	BAG
1,2-Dichlorobenzene	**U**	ppbv	6.1	16	V409C12A	3/12/2009	3/12/2009	BAG
1,3-Dichlorobenzene	**U**	ppbv	6.1	16	V409C12A	3/12/2009	3/12/2009	BAG
1,4-Dichlorobenzene	**U**	ppbv	6.1	16	V409C12A	3/12/2009	3/12/2009	BAG
Dichlorodifluoromethane	**U**	ppbv	5.6	16	V409C12A	3/12/2009	3/12/2009	BAG

Analytical Laboratory Report

Client Identification:	**Envirologic Technologies, Inc.**	Sample Matrix:	**Air**
Fibertec Project Number:	**33140**	Sample Number:	**33140-007**

Client Sample Information

Project Identification:	**Kzoo Co**	Client Sample Description:	**SUB-2**
Project Number:	**080503**	Client Sample Number:	**7**
Sample Date:	**3/11/2009**	Chain of Custody Number:	**82433**

Comments:

Definitions/ Qualifiers:

A: Spike recovery or precision unusable due to dilution.
B: The analyte was detected in the associated method blank.
E: The analyte was detected at a concentration greater than the calibration range, therefore the result is estimated.
J: The concentration is an estimated value.
U: The analyte was not detected at or above the reporting limit.
X: Matrix Interference has resulted in a raised reporting limit or distorted result.
W: Results reported on a wet-weight basis.
*: Value reported is outside QA limits

Analyte	Result	Units	Report Limit	Dilution Factor	Prep Batch	Prep Date/Time	Analysis Date/Time	Analyst
TO-15 (TO-15)								
1,1-Dichloroethane	**U**	ppbv	5.9	16	V409C12A	3/12/2009	3/12/2009	BAG
1,2-Dichloroethane	**U**	ppbv	5.9	16	V409C12A	3/12/2009	3/12/2009	BAG
1,1-Dichloroethene	**U**	ppbv	5.8	16	V409C12A	3/12/2009	3/12/2009	BAG
cis-1,2-Dichloroethene	**U**	ppbv	6.1	16	V409C12A	3/12/2009	3/12/2009	BAG
trans-1,2-Dichloroethene	**U**	ppbv	5.3	16	V409C12A	3/12/2009	3/12/2009	BAG
1,2-Dichloropropane	**U**	ppbv	18	16	V409C12A	3/12/2009	3/12/2009	BAG
cis-1,3-Dichloropropene	**U**	ppbv	5.8	16	V409C12A	3/12/2009	3/12/2009	BAG
trans-1,3-Dichloropropene	**U**	ppbv	6.4	16	V409C12A	3/12/2009	3/12/2009	BAG
1,4-Dioxane	**U**	ppbv	5.9	16	V409C12A	3/12/2009	3/12/2009	BAG
Ethyl Acetate	**U**	ppbv	16	16	V409C12A	3/12/2009	3/12/2009	BAG
Ethylbenzene	**U**	ppbv	6.1	16	V409C12A	3/12/2009	3/12/2009	BAG
Ethylene Dibromide	**U**	ppbv	5.8	16	V409C12A	3/12/2009	3/12/2009	BAG
4-Ethyltoluene	**U**	ppbv	6.1	16	V409C12A	3/12/2009	3/12/2009	BAG
n-Heptane	**U**	ppbv	5.6	16	V409C12A	3/12/2009	3/12/2009	BAG
Hexachlorobutadiene	**U**	ppbv	6.1	16	V409C12A	3/12/2009	3/12/2009	BAG
n-Hexane	**U**	ppbv	5.3	16	V409C12A	3/12/2009	3/12/2009	BAG
2-Hexanone	**U**	ppbv	18	16	V409C12A	3/12/2009	3/12/2009	BAG
Isopropyl Alcohol	**880000** E	ppbv	1300	3500	V409C17A	3/14/2009	3/14/2009	BAG
Methylene Chloride	**U**	ppbv	5.9	16	V409C12A	3/12/2009	3/12/2009	BAG
4-Methyl-2-pentanone	**U**	ppbv	6.1	16	V409C12A	3/12/2009	3/12/2009	BAG

Analytical Laboratory Report

Client Identification:	**Envirologic Technologies, Inc.**	Sample Matrix:	**Air**
Fibertec Project Number:	**33140**	Sample Number:	**33140-007**

Client Sample Information

Project Identification:	**Kzoo Co**	Client Sample Description:	**SUB-2**
Project Number:	**080503**	Client Sample Number:	**7**
Sample Date:	**3/11/2009**	Chain of Custody Number:	**82433**

Comments:

Definitions/ Qualifiers:

A: Spike recovery or precision unusable due to dilution.
B: The analyte was detected in the associated method blank.
E: The analyte was detected at a concentration greater than the calibration range, therefore the result is estimated.
J: The concentration is an estimated value.
U: The analyte was not detected at or above the reporting limit.
X: Matrix Interference has resulted in a raised reporting limit or distorted result.
W: Results reported on a wet-weight basis.
*: Value reported is outside QA limits

Analyte	Result	Units	Report Limit	Dilution Factor	Prep Batch	Prep Date/Time	Analysis Date/Time	Analyst
TO-15 (TO-15)								
MTBE	**U**	ppbv	5.6	16	V409C12A	3/12/2009	3/12/2009	BAG
Propylene	**U**	ppbv	5400	15000	V409C13A	3/13/2009	3/13/2009	BAG
Styrene	**U**	ppbv	6.1	16	V409C12A	3/12/2009	3/12/2009	BAG
1,1,2,2-Tetrachloroethane	**U**	ppbv	6.1	16	V409C12A	3/12/2009	3/12/2009	BAG
Tetrachloroethene	**17000**	ppbv	520	1400	V409C13A	3/13/2009	3/13/2009	BAG
Tetrahydrofuran	**U**	ppbv	17	16	V409C12A	3/12/2009	3/12/2009	BAG
Toluene	**U**	ppbv	6.1	16	V409C12A	3/12/2009	3/12/2009	BAG
1,2,4-Trichlorobenzene	**U**	ppbv	6.1	16	V409C12A	3/12/2009	3/12/2009	BAG
1,1,1-Trichloroethane	**U**	ppbv	5.9	16	V409C12A	3/12/2009	3/12/2009	BAG
1,1,2-Trichloroethane	**U**	ppbv	6.1	16	V409C12A	3/12/2009	3/12/2009	BAG
Trichloroethene	**160**	ppbv	5.9	16	V409C12A	3/12/2009	3/12/2009	BAG
Trichlorofluoromethane	**U**	ppbv	5.4	16	V409C12A	3/12/2009	3/12/2009	BAG
1,1,2-Trichloro-1,2,2-trifluoroethane	**U**	ppbv	5.8	16	V409C12A	3/12/2009	3/12/2009	BAG
1,2,4-Trimethylbenzene	**U**	ppbv	6.1	16	V409C12A	3/12/2009	3/12/2009	BAG
1,3,5-Trimethylbenzene	**U**	ppbv	6.1	16	V409C12A	3/12/2009	3/12/2009	BAG
Vinyl Acetate	**U**	ppbv	18	16	V409C12A	3/12/2009	3/12/2009	BAG
Vinyl Chloride	**U**	ppbv	5.6	16	V409C12A	3/12/2009	3/12/2009	BAG
m&p-Xylene	**U**	ppbv	12	16	V409C12A	3/12/2009	3/12/2009	BAG
o-Xylene	**U**	ppbv	6.1	16	V409C12A	3/12/2009	3/12/2009	BAG

Analytical Laboratory Report

Client Identification:	**Envirologic Technologies, Inc.**	Sample Matrix:	**Air**
Fibertec Project Number:	**33140**	Sample Number:	**33140-008**

Client Sample Information

Project Identification:	**Kzoo Co**	Client Sample Description:	**SUB-5**
Project Number:	**080503**	Client Sample Number:	**8**
Sample Date:	**3/11/2009**	Chain of Custody Number:	**82433**

Comments:

Definitions/ Qualifiers:

A: Spike recovery or precision unusable due to dilution.
B: The analyte was detected in the associated method blank.
E: The analyte was detected at a concentration greater than the calibration range, therefore the result is estimated.
J: The concentration is an estimated value.
U: The analyte was not detected at or above the reporting limit.
X: Matrix Interference has resulted in a raised reporting limit or distorted result.
W: Results reported on a wet-weight basis.
*: Value reported is outside QA limits

Analyte	Result	Units	Report Limit	Dilution Factor	Prep Batch	Prep Date/Time	Analysis Date/Time	Analyst
TO-15 (TO-15)								
Acetone	**U**	ppbv	5.8	17	V409C13A	3/13/2009	3/13/2009	BAG
Benzene	**U**	ppbv	6.5	17	V409C12A	3/13/2009	3/13/2009	BAG
Benzyl Chloride	**U**	ppbv	6.5	17	V409C12A	3/13/2009	3/13/2009	BAG
Bromodichloromethane	**U**	ppbv	6.3	17	V409C12A	3/13/2009	3/13/2009	BAG
Bromoform	**U**	ppbv	6.5	17	V409C12A	3/13/2009	3/13/2009	BAG
Bromomethane	**U**	ppbv	18	17	V409C12A	3/13/2009	3/13/2009	BAG
1,3-Butadiene	**U**	ppbv	6.3	17	V409C12A	3/13/2009	3/13/2009	BAG
2-Butanone	**U**	ppbv	19	17	V409C12A	3/13/2009	3/13/2009	BAG
Carbon Disulfide	**U**	ppbv	6.0	17	V409C12A	3/13/2009	3/13/2009	BAG
Carbon Tetrachloride	**U**	ppbv	6.5	17	V409C12A	3/13/2009	3/13/2009	BAG
Chlorobenzene	**U**	ppbv	6.5	17	V409C12A	3/13/2009	3/13/2009	BAG
Chloroethane	**U**	ppbv	6.0	17	V409C12A	3/13/2009	3/13/2009	BAG
Chloroform	**U**	ppbv	5.6	17	V409C12A	3/13/2009	3/13/2009	BAG
Chloromethane	**U**	ppbv	18	17	V409C12A	3/13/2009	3/13/2009	BAG
Cyclohexane	**U**	ppbv	5.8	17	V409C12A	3/13/2009	3/13/2009	BAG
Dibromochloromethane	**U**	ppbv	6.3	17	V409C12A	3/13/2009	3/13/2009	BAG
1,2-Dichlorobenzene	**U**	ppbv	6.5	17	V409C12A	3/13/2009	3/13/2009	BAG
1,3-Dichlorobenzene	**U**	ppbv	6.5	17	V409C12A	3/13/2009	3/13/2009	BAG
1,4-Dichlorobenzene	**U**	ppbv	6.5	17	V409C12A	3/13/2009	3/13/2009	BAG
Dichlorodifluoromethane	**U**	ppbv	6.0	17	V409C12A	3/13/2009	3/13/2009	BAG

Analytical Laboratory Report

Client Identification:	**Envirologic Technologies, Inc.**	Sample Matrix:	**Air**
Fibertec Project Number:	**33140**	Sample Number:	**33140-008**

Client Sample Information

Project Identification:	**Kzoo Co**	Client Sample Description:	**SUB-5**
Project Number:	**080503**	Client Sample Number:	**8**
Sample Date:	**3/11/2009**	Chain of Custody Number:	**82433**

Comments:

Definitions/ Qualifiers:

A: Spike recovery or precision unusable due to dilution.
B: The analyte was detected in the associated method blank.
E: The analyte was detected at a concentration greater than the calibration range, therefore the result is estimated.
J: The concentration is an estimated value.
U: The analyte was not detected at or above the reporting limit.
X: Matrix Interference has resulted in a raised reporting limit or distorted result.
W: Results reported on a wet-weight basis.
*: Value reported is outside QA limits

Analyte	Result	Units	Report Limit	Dilution Factor	Prep Batch	Prep Date/Time	Analysis Date/Time	Analyst
TO-15 (TO-15)								
1,1-Dichloroethane	**U**	ppbv	6.3	17	V409C12A	3/13/2009	3/13/2009	BAG
1,2-Dichloroethane	**U**	ppbv	6.3	17	V409C12A	3/13/2009	3/13/2009	BAG
1,1-Dichloroethene	**U**	ppbv	6.1	17	V409C12A	3/13/2009	3/13/2009	BAG
cis-1,2-Dichloroethene	**U**	ppbv	6.5	17	V409C12A	3/13/2009	3/13/2009	BAG
trans-1,2-Dichloroethene	**U**	ppbv	5.6	17	V409C12A	3/13/2009	3/13/2009	BAG
1,2-Dichloropropane	**U**	ppbv	19	17	V409C12A	3/13/2009	3/13/2009	BAG
cis-1,3-Dichloropropene	**U**	ppbv	6.1	17	V409C12A	3/13/2009	3/13/2009	BAG
trans-1,3-Dichloropropene	**U**	ppbv	6.8	17	V409C12A	3/13/2009	3/13/2009	BAG
1,4-Dioxane	**U**	ppbv	6.3	17	V409C12A	3/13/2009	3/13/2009	BAG
Ethyl Acetate	**U**	ppbv	17	17	V409C12A	3/13/2009	3/13/2009	BAG
Ethylbenzene	**U**	ppbv	6.5	17	V409C12A	3/13/2009	3/13/2009	BAG
Ethylene Dibromide	**U**	ppbv	6.1	17	V409C12A	3/13/2009	3/13/2009	BAG
4-Ethyltoluene	**U**	ppbv	6.5	17	V409C12A	3/13/2009	3/13/2009	BAG
n-Heptane	**U**	ppbv	6.0	17	V409C12A	3/13/2009	3/13/2009	BAG
Hexachlorobutadiene	**U**	ppbv	6.5	17	V409C12A	3/13/2009	3/13/2009	BAG
n-Hexane	**U**	ppbv	5.6	17	V409C12A	3/13/2009	3/13/2009	BAG
2-Hexanone	**U**	ppbv	19	17	V409C12A	3/13/2009	3/13/2009	BAG
Isopropyl Alcohol	**330**	ppbv	6.3	17	V409C13A	3/13/2009	3/13/2009	BAG
Methylene Chloride	**U**	ppbv	59	160	V409C13A	3/13/2009	3/13/2009	BAG
4-Methyl-2-pentanone	**U**	ppbv	6.5	17	V409C12A	3/13/2009	3/13/2009	BAG

Analytical Laboratory Report

Client Identification:	**Envirologic Technologies, Inc.**	Sample Matrix:	**Air**
Fibertec Project Number:	**33140**	Sample Number:	**33140-008**

Client Sample Information

Project Identification:	**Kzoo Co**	Client Sample Description:	**SUB-5**
Project Number:	**080503**	Client Sample Number:	**8**
Sample Date:	**3/11/2009**	Chain of Custody Number:	**82433**

Comments:

Definitions/ Qualifiers:

A: Spike recovery or precision unusable due to dilution.
B: The analyte was detected in the associated method blank.
E: The analyte was detected at a concentration greater than the calibration range, therefore the result is estimated.
J: The concentration is an estimated value.
U: The analyte was not detected at or above the reporting limit.
X: Matrix Interference has resulted in a raised reporting limit or distorted result.
W: Results reported on a wet-weight basis.
*: Value reported is outside QA limits

Analyte	Result	Units	Report Limit	Dilution Factor	Prep Batch	Prep Date/Time	Analysis Date/Time	Analyst
TO-15 (TO-15)								
MTBE	**U**	ppbv	6.0	17	V409C12A	3/13/2009	3/13/2009	BAG
Propylene	**U**	ppbv	58	160	V409C13A	3/13/2009	3/13/2009	BAG
Styrene	**U**	ppbv	6.5	17	V409C12A	3/13/2009	3/13/2009	BAG
1,1,2,2-Tetrachloroethane	**U**	ppbv	6.5	17	V409C12A	3/13/2009	3/13/2009	BAG
Tetrachloroethene	**220**	ppbv	6.3	17	V409C13A	3/13/2009	3/13/2009	BAG
Tetrahydrofuran	**U**	ppbv	18	17	V409C12A	3/13/2009	3/13/2009	BAG
Toluene	**U**	ppbv	6.5	17	V409C12A	3/13/2009	3/13/2009	BAG
1,2,4-Trichlorobenzene	**U**	ppbv	6.5	17	V409C12A	3/13/2009	3/13/2009	BAG
1,1,1-Trichloroethane	**U**	ppbv	6.3	17	V409C12A	3/13/2009	3/13/2009	BAG
1,1,2-Trichloroethane	**U**	ppbv	6.5	17	V409C12A	3/13/2009	3/13/2009	BAG
Trichloroethene	**U**	ppbv	37	100	V409C12A	3/13/2009	3/13/2009	BAG
Trichlorofluoromethane	**U**	ppbv	5.8	17	V409C12A	3/13/2009	3/13/2009	BAG
1,1,2-Trichloro-1,2,2-trifluoroethane	**U**	ppbv	6.1	17	V409C12A	3/13/2009	3/13/2009	BAG
1,2,4-Trimethylbenzene	**U**	ppbv	6.5	17	V409C12A	3/13/2009	3/13/2009	BAG
1,3,5-Trimethylbenzene	**U**	ppbv	6.5	17	V409C12A	3/13/2009	3/13/2009	BAG
Vinyl Acetate	**U**	ppbv	19	17	V409C12A	3/13/2009	3/13/2009	BAG
Vinyl Chloride	**U**	ppbv	6.0	17	V409C12A	3/13/2009	3/13/2009	BAG
m&p-Xylene	**U**	ppbv	13	17	V409C12A	3/13/2009	3/13/2009	BAG
o-Xylene	**U**	ppbv	6.5	17	V409C12A	3/13/2009	3/13/2009	BAG

Analytical Laboratory Report

Client Identification:	**Envirologic Technologies, Inc.**	Sample Matrix:	**Air**
Fibertec Project Number:	**33140**	Sample Number:	**33140-009**

Client Sample Information

Project Identification:	**Kzoo Co**	Client Sample Description:	**SUB-4**
Project Number:	**080503**	Client Sample Number:	**9**
Sample Date:	**3/11/2009**	Chain of Custody Number:	**82433**

Comments:

Definitions/ Qualifiers:

A: Spike recovery or precision unusable due to dilution.
B: The analyte was detected in the associated method blank.
E: The analyte was detected at a concentration greater than the calibration range, therefore the result is estimated.
J: The concentration is an estimated value.
U: The analyte was not detected at or above the reporting limit.
X: Matrix Interference has resulted in a raised reporting limit or distorted result.
W: Results reported on a wet-weight basis.
*: Value reported is outside QA limits

Analyte	Result	Units	Report Limit	Dilution Factor	Prep Batch	Prep Date/Time	Analysis Date/Time	Analyst
TO-15 (TO-15)								
Acetone	**U**	ppbv	5.8	17	V409C12A	3/13/2009	3/13/2009	BAG
Benzene	**U**	ppbv	6.5	17	V409C12A	3/13/2009	3/13/2009	BAG
Benzyl Chloride	**U**	ppbv	6.5	17	V409C12A	3/13/2009	3/13/2009	BAG
Bromodichloromethane	**U**	ppbv	6.3	17	V409C12A	3/13/2009	3/13/2009	BAG
Bromoform	**U**	ppbv	6.5	17	V409C12A	3/13/2009	3/13/2009	BAG
Bromomethane	**U**	ppbv	18	17	V409C12A	3/13/2009	3/13/2009	BAG
1,3-Butadiene	**U**	ppbv	6.3	17	V409C12A	3/13/2009	3/13/2009	BAG
2-Butanone	**U**	ppbv	19	17	V409C12A	3/13/2009	3/13/2009	BAG
Carbon Disulfide	**U**	ppbv	6.0	17	V409C12A	3/13/2009	3/13/2009	BAG
Carbon Tetrachloride	**U**	ppbv	6.5	17	V409C12A	3/13/2009	3/13/2009	BAG
Chlorobenzene	**U**	ppbv	6.5	17	V409C12A	3/13/2009	3/13/2009	BAG
Chloroethane	**U**	ppbv	6.0	17	V409C12A	3/13/2009	3/13/2009	BAG
Chloroform	**U**	ppbv	5.6	17	V409C12A	3/13/2009	3/13/2009	BAG
Chloromethane	**U**	ppbv	18	17	V409C12A	3/13/2009	3/13/2009	BAG
Cyclohexane	**U**	ppbv	5.8	17	V409C12A	3/13/2009	3/13/2009	BAG
Dibromochloromethane	**U**	ppbv	6.3	17	V409C12A	3/13/2009	3/13/2009	BAG
1,2-Dichlorobenzene	**U**	ppbv	6.5	17	V409C12A	3/13/2009	3/13/2009	BAG
1,3-Dichlorobenzene	**U**	ppbv	6.5	17	V409C12A	3/13/2009	3/13/2009	BAG
1,4-Dichlorobenzene	**U**	ppbv	6.5	17	V409C12A	3/13/2009	3/13/2009	BAG
Dichlorodifluoromethane	**U**	ppbv	6.0	17	V409C12A	3/13/2009	3/13/2009	BAG

Analytical Laboratory Report

Client Identification:	**Envirologic Technologies, Inc.**	Sample Matrix:	**Air**
Fibertec Project Number:	**33140**	Sample Number:	**33140-009**

Client Sample Information

Project Identification:	**Kzoo Co**	Client Sample Description:	**SUB-4**
Project Number:	**080503**	Client Sample Number:	**9**
Sample Date:	**3/11/2009**	Chain of Custody Number:	**82433**

Comments:

Definitions/ Qualifiers:

A: Spike recovery or precision unusable due to dilution.
B: The analyte was detected in the associated method blank.
E: The analyte was detected at a concentration greater than the calibration range, therefore the result is estimated.
J: The concentration is an estimated value.
U: The analyte was not detected at or above the reporting limit.
X: Matrix Interference has resulted in a raised reporting limit or distorted result.
W: Results reported on a wet-weight basis.
*: Value reported is outside QA limits

Analyte	Result	Units	Report Limit	Dilution Factor	Prep Batch	Prep Date/Time	Analysis Date/Time	Analyst
TO-15 (TO-15)								
1,1-Dichloroethane	**U**	ppbv	6.3	17	V409C12A	3/13/2009	3/13/2009	BAG
1,2-Dichloroethane	**U**	ppbv	6.3	17	V409C12A	3/13/2009	3/13/2009	BAG
1,1-Dichloroethene	**U**	ppbv	6.1	17	V409C12A	3/13/2009	3/13/2009	BAG
cis-1,2-Dichloroethene	**U**	ppbv	6.5	17	V409C12A	3/13/2009	3/13/2009	BAG
trans-1,2-Dichloroethene	**U**	ppbv	5.6	17	V409C12A	3/13/2009	3/13/2009	BAG
1,2-Dichloropropane	**U**	ppbv	19	17	V409C12A	3/13/2009	3/13/2009	BAG
cis-1,3-Dichloropropene	**U**	ppbv	6.1	17	V409C12A	3/13/2009	3/13/2009	BAG
trans-1,3-Dichloropropene	**U**	ppbv	6.8	17	V409C12A	3/13/2009	3/13/2009	BAG
1,4-Dioxane	**U**	ppbv	6.3	17	V409C12A	3/13/2009	3/13/2009	BAG
Ethyl Acetate	**U**	ppbv	17	17	V409C12A	3/13/2009	3/13/2009	BAG
Ethylbenzene	**U**	ppbv	6.5	17	V409C12A	3/13/2009	3/13/2009	BAG
Ethylene Dibromide	**U**	ppbv	6.1	17	V409C12A	3/13/2009	3/13/2009	BAG
4-Ethyltoluene	**U**	ppbv	6.5	17	V409C12A	3/13/2009	3/13/2009	BAG
n-Heptane	**U**	ppbv	6.0	17	V409C12A	3/13/2009	3/13/2009	BAG
Hexachlorobutadiene	**U**	ppbv	6.5	17	V409C12A	3/13/2009	3/13/2009	BAG
n-Hexane	**U**	ppbv	5.6	17	V409C12A	3/13/2009	3/13/2009	BAG
2-Hexanone	**U**	ppbv	19	17	V409C12A	3/13/2009	3/13/2009	BAG
Isopropyl Alcohol	**18000** E	ppbv	41	110	V409C17A	3/14/2009	3/14/2009	BAG
Methylene Chloride	**U**	ppbv	37	100	V409C12A	3/13/2009	3/13/2009	BAG
4-Methyl-2-pentanone	**U**	ppbv	6.5	17	V409C12A	3/13/2009	3/13/2009	BAG

Analytical Laboratory Report

Client Identification:	**Envirologic Technologies, Inc.**	Sample Matrix:	**Air**
Fibertec Project Number:	**33140**	Sample Number:	**33140-009**

Client Sample Information

Project Identification:	**Kzoo Co**	Client Sample Description:	**SUB-4**
Project Number:	**080503**	Client Sample Number:	**9**
Sample Date:	**3/11/2009**	Chain of Custody Number:	**82433**

Comments:

Definitions/ Qualifiers:

A: Spike recovery or precision unusable due to dilution.
B: The analyte was detected in the associated method blank.
E: The analyte was detected at a concentration greater than the calibration range, therefore the result is estimated.
J: The concentration is an estimated value.
U: The analyte was not detected at or above the reporting limit.
X: Matrix Interference has resulted in a raised reporting limit or distorted result.
W: Results reported on a wet-weight basis.
*: Value reported is outside QA limits

Analyte	Result	Units	Report Limit	Dilution Factor	Prep Batch	Prep Date/Time	Analysis Date/Time	Analyst
TO-15 (TO-15)								
MTBE	**U**	ppbv	6.0	17	V409C12A	3/13/2009	3/13/2009	BAG
Propylene	**U**	ppbv	180	500	V409C17A	3/14/2009	3/14/2009	BAG
Styrene	**U**	ppbv	6.5	17	V409C12A	3/13/2009	3/13/2009	BAG
1,1,2,2-Tetrachloroethane	**U**	ppbv	6.5	17	V409C12A	3/13/2009	3/13/2009	BAG
Tetrachloroethene	**1600**	ppbv	40	107	V409C17A	3/14/2009	3/14/2009	BAG
Tetrahydrofuran	**U**	ppbv	18	17	V409C12A	3/13/2009	3/13/2009	BAG
Toluene	**U**	ppbv	6.5	17	V409C12A	3/13/2009	3/13/2009	BAG
1,2,4-Trichlorobenzene	**U**	ppbv	6.5	17	V409C12A	3/13/2009	3/13/2009	BAG
1,1,1-Trichloroethane	**U**	ppbv	6.3	17	V409C12A	3/13/2009	3/13/2009	BAG
1,1,2-Trichloroethane	**U**	ppbv	6.5	17	V409C12A	3/13/2009	3/13/2009	BAG
Trichloroethene	**30**	ppbv	6.3	17	V409C12A	3/13/2009	3/13/2009	BAG
Trichlorofluoromethane	**U**	ppbv	5.8	17	V409C12A	3/13/2009	3/13/2009	BAG
1,1,2-Trichloro-1,2,2-trifluoroethane	**U**	ppbv	6.1	17	V409C12A	3/13/2009	3/13/2009	BAG
1,2,4-Trimethylbenzene	**U**	ppbv	6.5	17	V409C12A	3/13/2009	3/13/2009	BAG
1,3,5-Trimethylbenzene	**U**	ppbv	6.5	17	V409C12A	3/13/2009	3/13/2009	BAG
Vinyl Acetate	**U**	ppbv	19	17	V409C12A	3/13/2009	3/13/2009	BAG
Vinyl Chloride	**U**	ppbv	6.0	17	V409C12A	3/13/2009	3/13/2009	BAG
m&p-Xylene	**U**	ppbv	13	17	V409C12A	3/13/2009	3/13/2009	BAG
o-Xylene	**U**	ppbv	6.5	17	V409C12A	3/13/2009	3/13/2009	BAG

Analytical Laboratory Report

Client Identification:	**Envirologic Technologies, Inc.**	Sample Matrix:	**Air**
Fibertec Project Number:	**33140**	Sample Number:	**33140-010**

Client Sample Information

Project Identification:	**Kzoo Co**	Client Sample Description:	**SUB-16**
Project Number:	**080503**	Client Sample Number:	**10**
Sample Date:	**3/11/2009**	Chain of Custody Number:	**82433**

Comments:

Definitions/ Qualifiers:

A: Spike recovery or precision unusable due to dilution.
B: The analyte was detected in the associated method blank.
E: The analyte was detected at a concentration greater than the calibration range, therefore the result is estimated.
J: The concentration is an estimated value.
U: The analyte was not detected at or above the reporting limit.
X: Matrix Interference has resulted in a raised reporting limit or distorted result.
W: Results reported on a wet-weight basis.
*: Value reported is outside QA limits

Analyte	Result	Units	Report Limit	Dilution Factor	Prep Batch	Prep Date/Time	Analysis Date/Time	Analyst
TO-15 (TO-15)								
Acetone	**U**	ppbv	5.1	15	V409C13A	3/13/2009	3/13/2009	BAG
Benzene	**U**	ppbv	5.7	15	V409C12A	3/13/2009	3/13/2009	BAG
Benzyl Chloride	**U**	ppbv	5.7	15	V409C12A	3/13/2009	3/13/2009	BAG
Bromodichloromethane	**U**	ppbv	5.6	15	V409C12A	3/13/2009	3/13/2009	BAG
Bromoform	**U**	ppbv	5.7	15	V409C12A	3/13/2009	3/13/2009	BAG
Bromomethane	**U**	ppbv	16	15	V409C12A	3/13/2009	3/13/2009	BAG
1,3-Butadiene	**U**	ppbv	5.6	15	V409C12A	3/13/2009	3/13/2009	BAG
2-Butanone	**U**	ppbv	16	15	V409C12A	3/13/2009	3/13/2009	BAG
Carbon Disulfide	**U**	ppbv	5.3	15	V409C12A	3/13/2009	3/13/2009	BAG
Carbon Tetrachloride	**U**	ppbv	5.7	15	V409C12A	3/13/2009	3/13/2009	BAG
Chlorobenzene	**U**	ppbv	5.7	15	V409C12A	3/13/2009	3/13/2009	BAG
Chloroethane	**U**	ppbv	5.3	15	V409C12A	3/13/2009	3/13/2009	BAG
Chloroform	**U**	ppbv	5.0	15	V409C12A	3/13/2009	3/13/2009	BAG
Chloromethane	**U**	ppbv	16	15	V409C12A	3/13/2009	3/13/2009	BAG
Cyclohexane	**U**	ppbv	5.1	15	V409C12A	3/13/2009	3/13/2009	BAG
Dibromochloromethane	**U**	ppbv	5.6	15	V409C12A	3/13/2009	3/13/2009	BAG
1,2-Dichlorobenzene	**U**	ppbv	5.7	15	V409C12A	3/13/2009	3/13/2009	BAG
1,3-Dichlorobenzene	**U**	ppbv	5.7	15	V409C12A	3/13/2009	3/13/2009	BAG
1,4-Dichlorobenzene	**U**	ppbv	5.7	15	V409C12A	3/13/2009	3/13/2009	BAG
Dichlorodifluoromethane	**U**	ppbv	5.3	15	V409C12A	3/13/2009	3/13/2009	BAG

Analytical Laboratory Report

Client Identification:	**Envirologic Technologies, Inc.**	Sample Matrix:	**Air**
Fibertec Project Number:	**33140**	Sample Number:	**33140-010**

Client Sample Information

Project Identification:	**Kzoo Co**	Client Sample Description:	**SUB-16**
Project Number:	**080503**	Client Sample Number:	**10**
Sample Date:	**3/11/2009**	Chain of Custody Number:	**82433**

Comments:

Definitions/ Qualifiers:

A: Spike recovery or precision unusable due to dilution.
B: The analyte was detected in the associated method blank.
E: The analyte was detected at a concentration greater than the calibration range, therefore the result is estimated.
J: The concentration is an estimated value.
U: The analyte was not detected at or above the reporting limit.
X: Matrix Interference has resulted in a raised reporting limit or distorted result.
W: Results reported on a wet-weight basis.
*: Value reported is outside QA limits

Analyte	Result	Units	Report Limit	Dilution Factor	Prep Batch	Prep Date/Time	Analysis Date/Time	Analyst
TO-15 (TO-15)								
1,1-Dichloroethane	**U**	ppbv	5.6	15	V409C12A	3/13/2009	3/13/2009	BAG
1,2-Dichloroethane	**U**	ppbv	5.6	15	V409C12A	3/13/2009	3/13/2009	BAG
1,1-Dichloroethene	**U**	ppbv	5.4	15	V409C12A	3/13/2009	3/13/2009	BAG
cis-1,2-Dichloroethene	**U**	ppbv	5.7	15	V409C12A	3/13/2009	3/13/2009	BAG
trans-1,2-Dichloroethene	**U**	ppbv	5.0	15	V409C12A	3/13/2009	3/13/2009	BAG
1,2-Dichloropropane	**U**	ppbv	17	15	V409C12A	3/13/2009	3/13/2009	BAG
cis-1,3-Dichloropropene	**U**	ppbv	5.4	15	V409C12A	3/13/2009	3/13/2009	BAG
trans-1,3-Dichloropropene	**U**	ppbv	6.0	15	V409C12A	3/13/2009	3/13/2009	BAG
1,4-Dioxane	**U**	ppbv	5.6	15	V409C12A	3/13/2009	3/13/2009	BAG
Ethyl Acetate	**U**	ppbv	15	15	V409C12A	3/13/2009	3/13/2009	BAG
Ethylbenzene	**U**	ppbv	5.7	15	V409C12A	3/13/2009	3/13/2009	BAG
Ethylene Dibromide	**U**	ppbv	5.4	15	V409C12A	3/13/2009	3/13/2009	BAG
4-Ethyltoluene	**U**	ppbv	5.7	15	V409C12A	3/13/2009	3/13/2009	BAG
n-Heptane	**U**	ppbv	5.3	15	V409C12A	3/13/2009	3/13/2009	BAG
Hexachlorobutadiene	**U**	ppbv	5.7	15	V409C12A	3/13/2009	3/13/2009	BAG
n-Hexane	**U**	ppbv	5.0	15	V409C12A	3/13/2009	3/13/2009	BAG
2-Hexanone	**U**	ppbv	17	15	V409C12A	3/13/2009	3/13/2009	BAG
Isopropyl Alcohol	**78**	ppbv	74	200	V409C13A	3/13/2009	3/13/2009	BAG
Methylene Chloride	**U**	ppbv	19	50	V409C13A	3/13/2009	3/13/2009	BAG
4-Methyl-2-pentanone	**U**	ppbv	5.7	15	V409C12A	3/13/2009	3/13/2009	BAG

Analytical Laboratory Report

Client Identification:	**Envirologic Technologies, Inc.**	Sample Matrix:	**Air**
Fibertec Project Number:	**33140**	Sample Number:	**33140-010**

Client Sample Information

Project Identification:	**Kzoo Co**	Client Sample Description:	**SUB-16**
Project Number:	**080503**	Client Sample Number:	**10**
Sample Date:	**3/11/2009**	Chain of Custody Number:	**82433**

Comments:

Definitions/ Qualifiers:

A: Spike recovery or precision unusable due to dilution.
B: The analyte was detected in the associated method blank.
E: The analyte was detected at a concentration greater than the calibration range, therefore the result is estimated.
J: The concentration is an estimated value.
U: The analyte was not detected at or above the reporting limit.
X: Matrix Interference has resulted in a raised reporting limit or distorted result.
W: Results reported on a wet-weight basis.
*: Value reported is outside QA limits

Analyte	Result	Units	Report Limit	Dilution Factor	Prep Batch	Prep Date/Time	Analysis Date/Time	Analyst
TO-15 (TO-15)								
MTBE	**U**	ppbv	5.3	15	V409C12A	3/13/2009	3/13/2009	BAG
Propylene	**U**	ppbv	36	100	V409C13A	3/13/2009	3/13/2009	BAG
Styrene	**U**	ppbv	5.7	15	V409C12A	3/13/2009	3/13/2009	BAG
1,1,2,2-Tetrachloroethane	**U**	ppbv	5.7	15	V409C12A	3/13/2009	3/13/2009	BAG
Tetrachloroethene	**U**	ppbv	5.6	15	V409C13A	3/13/2009	3/13/2009	BAG
Tetrahydrofuran	**U**	ppbv	16	15	V409C12A	3/13/2009	3/13/2009	BAG
Toluene	**U**	ppbv	5.7	15	V409C12A	3/13/2009	3/13/2009	BAG
1,2,4-Trichlorobenzene	**U**	ppbv	5.7	15	V409C12A	3/13/2009	3/13/2009	BAG
1,1,1-Trichloroethane	**U**	ppbv	5.6	15	V409C12A	3/13/2009	3/13/2009	BAG
1,1,2-Trichloroethane	**U**	ppbv	5.7	15	V409C12A	3/13/2009	3/13/2009	BAG
Trichloroethene	**U**	ppbv	5.6	15	V409C12A	3/13/2009	3/13/2009	BAG
Trichlorofluoromethane	**U**	ppbv	5.1	15	V409C12A	3/13/2009	3/13/2009	BAG
1,1,2-Trichloro-1,2,2-trifluoroethane	**U**	ppbv	5.4	15	V409C12A	3/13/2009	3/13/2009	BAG
1,2,4-Trimethylbenzene	**U**	ppbv	5.7	15	V409C12A	3/13/2009	3/13/2009	BAG
1,3,5-Trimethylbenzene	**U**	ppbv	5.7	15	V409C12A	3/13/2009	3/13/2009	BAG
Vinyl Acetate	**U**	ppbv	17	15	V409C12A	3/13/2009	3/13/2009	BAG
Vinyl Chloride	**U**	ppbv	5.3	15	V409C12A	3/13/2009	3/13/2009	BAG
m&p-Xylene	**U**	ppbv	11	15	V409C12A	3/13/2009	3/13/2009	BAG
o-Xylene	**U**	ppbv	5.7	15	V409C12A	3/13/2009	3/13/2009	BAG

Analytical Laboratory Report

Client Identification:	**Envirologic Technologies, Inc.**	Sample Matrix:	**Air**
Fibertec Project Number:	**33140**	Sample Number:	**33140-011**

Client Sample Information

Project Identification:	**Kzoo Co**	Client Sample Description:	**DUPLICATE**
Project Number:	**080503**	Client Sample Number:	**11**
Sample Date:	**3/11/2009**	Chain of Custody Number:	**82434**

Comments:

Definitions/ Qualifiers:

A: Spike recovery or precision unusable due to dilution.
B: The analyte was detected in the associated method blank.
E: The analyte was detected at a concentration greater than the calibration range, therefore the result is estimated.
J: The concentration is an estimated value.
U: The analyte was not detected at or above the reporting limit.
X: Matrix Interference has resulted in a raised reporting limit or distorted result.
W: Results reported on a wet-weight basis.
*: Value reported is outside QA limits

Analyte	Result	Units	Report Limit	Dilution Factor	Prep Batch	Prep Date/Time	Analysis Date/Time	Analyst
TO-15 (TO-15)								
Acetone	**U**	ppbv	190	570	V409C17A	3/15/2009	3/15/2009	BAG
Benzene	**U**	ppbv	5.7	15	V409C12A	3/13/2009	3/13/2009	BAG
Benzyl Chloride	**U**	ppbv	5.7	15	V409C12A	3/13/2009	3/13/2009	BAG
Bromodichloromethane	**U**	ppbv	5.6	15	V409C12A	3/13/2009	3/13/2009	BAG
Bromoform	**U**	ppbv	5.7	15	V409C12A	3/13/2009	3/13/2009	BAG
Bromomethane	**U**	ppbv	16	15	V409C12A	3/13/2009	3/13/2009	BAG
1,3-Butadiene	**U**	ppbv	5.6	15	V409C12A	3/13/2009	3/13/2009	BAG
2-Butanone	**U**	ppbv	16	15	V409C12A	3/13/2009	3/13/2009	BAG
Carbon Disulfide	**U**	ppbv	5.3	15	V409C12A	3/13/2009	3/13/2009	BAG
Carbon Tetrachloride	**U**	ppbv	5.7	15	V409C12A	3/13/2009	3/13/2009	BAG
Chlorobenzene	**U**	ppbv	5.7	15	V409C12A	3/13/2009	3/13/2009	BAG
Chloroethane	**U**	ppbv	5.3	15	V409C12A	3/13/2009	3/13/2009	BAG
Chloroform	**U**	ppbv	5.0	15	V409C12A	3/13/2009	3/13/2009	BAG
Chloromethane	**U**	ppbv	16	15	V409C12A	3/13/2009	3/13/2009	BAG
Cyclohexane	**U**	ppbv	5.1	15	V409C12A	3/13/2009	3/13/2009	BAG
Dibromochloromethane	**U**	ppbv	5.6	15	V409C12A	3/13/2009	3/13/2009	BAG
1,2-Dichlorobenzene	**U**	ppbv	5.7	15	V409C12A	3/13/2009	3/13/2009	BAG
1,3-Dichlorobenzene	**U**	ppbv	5.7	15	V409C12A	3/13/2009	3/13/2009	BAG
1,4-Dichlorobenzene	**U**	ppbv	5.7	15	V409C12A	3/13/2009	3/13/2009	BAG
Dichlorodifluoromethane	**U**	ppbv	5.3	15	V409C12A	3/13/2009	3/13/2009	BAG

Analytical Laboratory Report

Client Identification:	**Envirologic Technologies, Inc.**	Sample Matrix:	**Air**
Fibertec Project Number:	**33140**	Sample Number:	**33140-011**

Client Sample Information

Project Identification:	**Kzoo Co**	Client Sample Description:	**DUPLICATE**
Project Number:	**080503**	Client Sample Number:	**11**
Sample Date:	**3/11/2009**	Chain of Custody Number:	**82434**

Comments:

Definitions/ Qualifiers:

A: Spike recovery or precision unusable due to dilution.
B: The analyte was detected in the associated method blank.
E: The analyte was detected at a concentration greater than the calibration range, therefore the result is estimated.
J: The concentration is an estimated value.
U: The analyte was not detected at or above the reporting limit.
X: Matrix Interference has resulted in a raised reporting limit or distorted result.
W: Results reported on a wet-weight basis.
*: Value reported is outside QA limits

Analyte	Result	Units	Report Limit	Dilution Factor	Prep Batch	Prep Date/Time	Analysis Date/Time	Analyst
TO-15 (TO-15)								
1,1-Dichloroethane	**U**	ppbv	5.6	15	V409C12A	3/13/2009	3/13/2009	BAG
1,2-Dichloroethane	**U**	ppbv	5.6	15	V409C12A	3/13/2009	3/13/2009	BAG
1,1-Dichloroethene	**U**	ppbv	5.4	15	V409C12A	3/13/2009	3/13/2009	BAG
cis-1,2-Dichloroethene	**U**	ppbv	5.7	15	V409C12A	3/13/2009	3/13/2009	BAG
trans-1,2-Dichloroethene	**U**	ppbv	5.0	15	V409C12A	3/13/2009	3/13/2009	BAG
1,2-Dichloropropane	**U**	ppbv	17	15	V409C12A	3/13/2009	3/13/2009	BAG
cis-1,3-Dichloropropene	**U**	ppbv	5.4	15	V409C12A	3/13/2009	3/13/2009	BAG
trans-1,3-Dichloropropene	**U**	ppbv	6.0	15	V409C12A	3/13/2009	3/13/2009	BAG
1,4-Dioxane	**U**	ppbv	5.6	15	V409C12A	3/13/2009	3/13/2009	BAG
Ethyl Acetate	**U**	ppbv	15	15	V409C12A	3/13/2009	3/13/2009	BAG
Ethylbenzene	**U**	ppbv	5.7	15	V409C12A	3/13/2009	3/13/2009	BAG
Ethylene Dibromide	**U**	ppbv	5.4	15	V409C12A	3/13/2009	3/13/2009	BAG
4-Ethyltoluene	**U**	ppbv	5.7	15	V409C12A	3/13/2009	3/13/2009	BAG
n-Heptane	**U**	ppbv	5.3	15	V409C12A	3/13/2009	3/13/2009	BAG
Hexachlorobutadiene	**U**	ppbv	5.7	15	V409C12A	3/13/2009	3/13/2009	BAG
n-Hexane	**U**	ppbv	5.0	15	V409C12A	3/13/2009	3/13/2009	BAG
2-Hexanone	**U**	ppbv	17	15	V409C12A	3/13/2009	3/13/2009	BAG
Isopropyl Alcohol	**98000** E	ppbv	210	570	V409C17A	3/15/2009	3/15/2009	BAG
Methylene Chloride	**U**	ppbv	37	100	V409C12A	3/13/2009	3/13/2009	BAG
4-Methyl-2-pentanone	**U**	ppbv	5.7	15	V409C12A	3/13/2009	3/13/2009	BAG

Analytical Laboratory Report

Client Identification:	**Envirologic Technologies, Inc.**	Sample Matrix:	**Air**
Fibertec Project Number:	**33140**	Sample Number:	**33140-011**

Client Sample Information

Project Identification:	**Kzoo Co**	Client Sample Description:	**DUPLICATE**
Project Number:	**080503**	Client Sample Number:	**11**
Sample Date:	**3/11/2009**	Chain of Custody Number:	**82434**

Comments:

Definitions/ Qualifiers:

A: Spike recovery or precision unusable due to dilution.
B: The analyte was detected in the associated method blank.
E: The analyte was detected at a concentration greater than the calibration range, therefore the result is estimated.
J: The concentration is an estimated value.
U: The analyte was not detected at or above the reporting limit.
X: Matrix Interference has resulted in a raised reporting limit or distorted result.
W: Results reported on a wet-weight basis.
*: Value reported is outside QA limits

Analyte	Result	Units	Report Limit	Dilution Factor	Prep Batch	Prep Date/Time	Analysis Date/Time	Analyst
TO-15 (TO-15)								
MTBE	**U**	ppbv	5.3	15	V409C12A	3/13/2009	3/13/2009	BAG
Propylene	**U**	ppbv	1800	5000	V409C17A	3/15/2009	3/15/2009	BAG
Styrene	**U**	ppbv	5.7	15	V409C12A	3/13/2009	3/13/2009	BAG
1,1,2,2-Tetrachloroethane	**U**	ppbv	5.7	15	V409C12A	3/13/2009	3/13/2009	BAG
Tetrachloroethene	**8200**	ppbv	210	570	V409C17A	3/15/2009	3/15/2009	BAG
Tetrahydrofuran	**U**	ppbv	16	15	V409C12A	3/13/2009	3/13/2009	BAG
Toluene	**U**	ppbv	5.7	15	V409C12A	3/13/2009	3/13/2009	BAG
1,2,4-Trichlorobenzene	**U**	ppbv	5.7	15	V409C12A	3/13/2009	3/13/2009	BAG
1,1,1-Trichloroethane	**U**	ppbv	5.6	15	V409C12A	3/13/2009	3/13/2009	BAG
1,1,2-Trichloroethane	**U**	ppbv	5.7	15	V409C12A	3/13/2009	3/13/2009	BAG
Trichloroethene	**U**	ppbv	5.6	15	V409C12A	3/13/2009	3/13/2009	BAG
Trichlorofluoromethane	**U**	ppbv	5.1	15	V409C12A	3/13/2009	3/13/2009	BAG
1,1,2-Trichloro-1,2,2-trifluoroethane	**U**	ppbv	5.4	15	V409C12A	3/13/2009	3/13/2009	BAG
1,2,4-Trimethylbenzene	**U**	ppbv	5.7	15	V409C12A	3/13/2009	3/13/2009	BAG
1,3,5-Trimethylbenzene	**U**	ppbv	5.7	15	V409C12A	3/13/2009	3/13/2009	BAG
Vinyl Acetate	**U**	ppbv	17	15	V409C12A	3/13/2009	3/13/2009	BAG
Vinyl Chloride	**U**	ppbv	5.3	15	V409C12A	3/13/2009	3/13/2009	BAG
m&p-Xylene	**U**	ppbv	11	15	V409C12A	3/13/2009	3/13/2009	BAG
o-Xylene	**U**	ppbv	5.7	15	V409C12A	3/13/2009	3/13/2009	BAG

Fibertec
environmental
services

March 20, 2009

Narrative

Customer: Envirologic Technologies, Inc.
Project Identification: Kzoo Co/080503
Fibertec Project Number: 33140

Sample Collection/ Receipt
The following samples were collected and received by Fibertec on March 11, 2009.
11 Summa Canisters
All Samples were received on ice and in good condition.

Analysis
Analyses were conducted in accordance with chain of custody and within hold times.

All applicable quality assurance/ quality control parameters were within acceptance limits unless otherwise noted.

Volatiles
Samples 33140-001 (SUB-15), 33140-005 (SUB-3), 33140-006 (SUB-1), 33140-007 (SUB-2), 33140-009 (SUB-4) and 33140-011 (Duplicate) have estimated result for ispropyl alcohol, compound exceeded linear calibration range of instrument.

The following were reported with elevated reporting limits

Laboratory Number	Client ID	Analysis	Reason for elevated RL
33140-001	SUB-15	VOC	Sample Matrix
33140-002	SUB-13	VOC	Sample Matrix
33140-003	SUB-11	VOC	Sample Matrix
33140-004	SUB-9	VOC	Sample Matrix
33140-005	SUB-3	VOC	Sample Matrix
33140-006	SUB-1	VOC	Sample Matrix
33140-007	SUB-2	VOC	Sample Matrix
33140-008	SUB-5	VOC	Sample Matrix
33140-009	SUB-4	VOC	Sample Matrix
33140-010	SUB-16	VOC	Sample Matrix
33140-011	Duplicate	VOC	Sample Matrix

Kylen Crandall
Authorized Signature

3/20/09
Date

1914 Holloway Drive Holt, Michigan 48842 Telephone: (517) 699-0345 Facsimile: (517) 699-0388
11766 Grand River Brighton, Michigan 48116 Telephone: (810) 220-3300 Facsimile: (810) 220-3311

Fibertec environmental services

Analytical Laboratory
1914 Holloway Drive
Holt, MI 48842
Phone: 517 699 0345
Fax: 517 699 0388
email: lab@fibertec.us

8660 S. Mackinaw Trail
Cadillac, MI 49601
Phone: 231 775 8368
Fax: 231 775 8584

Industrial Hygiene Services, Inc.
1914 Holloway Drive
Holt, MI 48842
Phone: 517 699 0345
Fax: 517 699 0382
email: asbestos@fibertec.us

Geoprobe
11766 E. Grand River
Brighton, MI 48116
Phone: 810 220 3300
Fax: 810 220 3311

Chain of Custody # 82433

Client Name: Envirologic Technologies, Inc.

Contact Person: Erik Peterson

Project Name/ Number: Kzoo Co / 080503

Purchase Order#

Lab Sample #	Date	Time	Client Sample #	Client Sample Descriptor	MATRIX (SEE RIGHT CORNER FOR CODE)	# OF CONTAINERS	PRESERVED (Y/N)	PARAMETERS: TO-15	Remarks:
	3/11/09	8:50am		SUB-15	A			X	
		9:03am		SUB-13	A			X	
		9:09am		SUB-11	A			X	
		9:23am		SUB-9	A			X	
		9:43am		SUB-3	A			X	
		10:02am		SUB-1	A			X	
		10:12am		SUB-2	A			X	
		10:29am		SUB-5	A			X	
		10:38am		SUB-4	A			X	
		10:49am		SUB-16	A			X	

Turnaround:
- [ ] 24 hour RUSH (surcharge applies)
- [ ] 48 hour RUSH (surcharge applies)
- [ ] 72 hour RUSH (surcharge applies)
- [X] Standard (5-7 bus. days)
- [ ] Other: Specify

Matrix Code:
- S Soil
- W Water
- A Air
- O Oil
- P Wipe
- GW Ground Water
- SW Surface Water
- WW Waste Water
- X Other: Specify

Comments:

Relinquished By:	Date/ Time	Received By:
[signature]	3/11/09	[signature] 3/11/09 12:52
[signature]	3/11/09 14:27	[signature]
		Received By Laboratory:

LAB USE ONLY:
Fibertec project number: 33140
Laboratory Tracking:
Temperature at Receipt:

COC Revision: April, 2006

TERMS & CONDITIONS ON BACK

Fibertec environmental services

Analytical Laboratory
1914 Holloway Drive
Holt, MI 48842
Phone: 517 699 0345
Fax: 517 699 0388
email: lab@fibertec.us

8660 S. Mackinaw Trail
Cadillac, MI 49601
Phone: 231 775 8368
Fax: 231 775 8584

Industrial Hygiene Services, Inc.
1914 Holloway Drive
Holt, MI 48842
Phone: 517 699 0345
Fax: 517 699 0382
email: asbestos@fibertec.us

Geoprobe
11766 E. Grand River
Brighton, MI 48116
Phone: 810 220 3300
Fax: 810 220 3311

Chain of Custody # 82434

Client Name: Envirologic Technologies, Inc.

Contact Person: Erik Peterson

Project Name/ Number: KzooCo / 080503

Purchase Order#

Turnaround: 24 hour RUSH (surcharge applies); 48 hour RUSH (surcharge applies); 72 hour RUSH (surcharge applies); X Standard (5-7 bus. days); Other: Specify

Matrix Code: S Soil; GW Ground Water; W Water; SW Surface Water; A Air; WW Waste Water; O Oil; X Other: Specify; P Wipe

Lab Sample #	Date	Time	Client Sample #	Client Sample Descriptor	MATRIX (SEE RIGHT CORNER FOR CODE)	# OF CONTAINERS	PRESERVED (Y/N)	TOTS									Remarks:
	3/11/09			Duplicate	A			X									

Comments:

Relinquished By:	Date/ Time	Received By:
Erik D. Peterson	3/11/09	Lord Neal 3/11/09 12:52
Lord Neal	3/11/09 14:27	[signature]
		Received By Laboratory:

LAB USE ONLY:
Fibertec project number:
Laboratory Tracking:
Temperature at Receipt:

COC Revision: April, 2006

TERMS & CONDITIONS ON BACK

DATA VALIDATION REPORT
(QUALITY ASSURANCE ASSESSMENT)

GOODWILL INDUSTRIES OF SW MICHIGAN
2700 N. PITCHER ST.
KALAMAZOO TOWNSHIP, MICHIGAN

Envirologic Technologies, Inc. (Envirologic) completed a Phase II Environmental Site Assessment of Goodwill Industries of SW Michigan at 2700 N. Pitcher St., Kalamazoo Township, Michigan (subject property) on behalf of the Kalamazoo County Brownfield Redevelopment Authority (KCBRA) under a U.S. EPA Assessment grant. The purpose of this Data Validation Report is to validate and verify the analytical data, and draw conclusions on the data in relation to the Data Quality Objectives.

DQOS AND SAMPLE DESIGN REVIEW

The subject property was initially developed by the Upjohn Company as a warehouse in the 1950s. Since approximately 1966, Goodwill Industries of SW Michigan has occupied the subject property. Activities conducted on site by Goodwill have included: product assembly and light manufacturing; corrugated die-cutting; chip board die-cutting and shearing; sewing; drilling, deburring, sorting, inspecting and manual rework operations. Historic Goodwill activities have also included dry cleaning operations and the use of an underground storage tank (UST) containing gasoline for the fueling of fleet vehicles. Dry cleaning operations on the subject property reportedly took place from 1966 until 1982. Multiple Recognized Environmental Conditions were identified as a result of a Phase I ESA conducted by Envirologic.

- The subject property is identified as an “open” Leaking Underground Storage Tank (LUST) site, based upon a release reported to the MDEQ in July of 2007.
- Data sources indicate the potential that an additional UST, not previously registered, may have historically been associated with the subject property.
- Hydrogeologic investigations of the subject property completed in May and October of 2008 identified volatile halocarbon (primarily tetrachloroethene – PCE) impact to soil and groundwater at concentrations in excess of Part 201 Cleanup criteria.

Envirologic completed Phase II ESA sampling activities in order to investigate the potential for impact to the subject property. The sampling was conducted in accordance with a Sampling Plan and Quality Assurance Project Plan approved by U.S. EPA.

In conjunction with the future use of the property and due care obligations, the following Data Quality Objectives (DQO) were developed and presented in the U.S. EPA-approved Sampling Plan:

- Does an underground storage tank remain in place on the subject property associated with historic Upjohn operations? Have northeastern portions of the subject property been impacted due to the potential presence of a UST?
- Have shipping/receiving areas of the subject property been previously impacted by hazardous substances that will be utilized by Beckan Industries in the future? If contaminants exist, do they represent an unacceptable exposure relative to the intended future use of the site?
- Do volatile contaminant conditions beneath the building represent a due care concern relative to occupancy of the structure?

The DQOs are evaluated below with respect to the environmental concerns and the actual data collected.

DATA REVIEW (DATA VERIFICATION AND VALIDATION)

The data collected in the investigation was reviewed by the Data Manager, with supporting review provided by the Project Manager, Erik Peterson. The purpose of the review was to confirm (verify) that the data was collected in accordance with the Standard Operating Procedures (SOPs) and the Quality Assurance Project Plan (QAPP). In accordance with EPA approved modifications to the QAPP, the soil, groundwater, and sub slab soil gas samples were analyzed by Fibertec Laboraties, Inc. of Grand Rapids, Michigan. The quality of the data was simultaneously assessed to determine that it was scientifically valid. The purpose of the data verification and validation was to determine the usefulness of the data in making decisions posed by the DQOs and for making decisions on future property use with respect to environmental concerns. All of the collected data was determined to be verified and valid using the PARCC criteria (precision, accuracy, representativeness, completeness and comparability) as explained in the following table:

Criteria	Field Data	Laboratory Data
Precision	Field methods and equipment calibration SOPs were followed in order to provide data within the precision limits of the field equipment.	An elevated detection limit was reported for select analytes in the soil and sub-slab soil gas samples. The elevated detection limits have been attributed to the moisture content of the samples. The concentration of 1,4-dichloro-2-butene in the groundwater samples was estimated; the compound failed low on CCV.

Accuracy	No VOCs were detected in the Trip Blanks.	MS/MSD (soil) - The % difference in results between the sample and a serial dilution of the samples were within acceptable control limits.
Representativeness	The laboratory results were representative of field observations; that is, no apparent odor or staining was observed during sample collection and no VOCs were detected in soil samples.	The samples for analysis were extracted from the original samples following standard methods, and thus are representative.
Completeness	Based upon the lack of concerns identified in the GPR survey, boring locations GSB-12 and GSB-13 proposed in the Sampling Plan were not installed.	All of the analyses provided by the laboratory were determined to be complete.
Comparability	Mask duplicate soil, groundwater, and sub-slab soil gas samples were collected. Analytical results for the original and duplicate samples were comparable.	The samples were analyzed following standard methods and thus are comparable to cleanup criteria and other samples from the project site.

Field Procedures

The Sampling Plan, SOP and QAPP were prepared by Mr. Erik Peterson – Project Manager with Envirologic. Field notes and chain of custody procedures (including hold times) and instrument calibration were reviewed for this data assessment and found to meet the performance criteria.

Quality Assurance/Quality Control Samples

The QA/QC samples collected for this project are presented in following table:

Sample ID	Matrix	Type
Trip Blank	Water	Trip blank prepared by Fibertec for sample cooler.
Methanol Blank	Soil	A methanol blank was submitted for VOCs analysis.
EB-Soil	Water	Equipment blank from macro-core sampler
EB-Groundwater	Water	Equipment blank from screen point sampler
M-1S	Water	GSB-5 @ 0.5 ft.
M-1GW	Water	GSB-7 @ 3-7 ft.
Duplicate	Soil Gas	SUB-3
MS/MSD	Soil	GSB-8 @ 0.5 ft.
MS/MSD	Groundwater	GSB-3 @ 7-11 ft.

Trip Blank

The purpose of the trip blank was to verify that no cross-contamination had occurred during sample handling and shipment. The trip blank was prepared by Fibertec and maintained throughout the sampling event with the sampling cooler. No volatile organic compounds (VOCs) were detected above the reporting limit in the Trip Blank. The lack

of detection of VOCs in the trip blank indicates that the sample handling procedures did not represent a potential for cross-contamination.

Equipment Blanks

The purpose of the Equipment Blanks was to evaluate the potential for the introduction of cross-contamination from one sample to another as a result of decontamination procedures. An equipment blank for soil sampling (EB-Soil) was collected from the rinsate water after decontaminating the Geoprobe™ macro-core sampler. No VOCs were identified above the method detection limit in the EB-Soil sample. An equipment blank for groundwater sampling (EB-Groundwater) was collected from the rinsate water after decontaminating the Geoprobe™ screen point sampler. No VOCs were identified above the method detection limit in the EB-Groundwater sample. The equipment blank sample results indicate that decontamination procedures do not represent a concern for cross-contamination.

Methanol Blank

A Methanol Blank was collected during the sampling activities. The methanol blank was collected in order to evaluate the potential for VOCs cross-contamination as a result of field conditions. No VOCs were identified above the reporting limit within the Methanol Blank sample. No concerns associated with potential cross-contamination as a result of field conditions were identified based upon the Methanol Blank analytical results.

Duplicate Samples

The purpose of the mask duplicate samples was to evaluate the ability of the laboratory to replicate data. The masked duplicate for soil was collected from GSB-5 @ 0.5 ft. No VOCs or PNAs were detected in either the GSB-5 or mask duplicate soil sample. The reported concentrations of metals in the GSB-5 and mask duplicate samples were very similar.

The mask duplicate groundwater sample was collected from sample GSB-7 @ 3-7 ft. The detection of VOCs in the sample and duplicate was limited to cis-1,2-dichloroethene and vinyl chloride. The concentrations of cis-1,2-dichloroethene (12 ug/L & 12ug/L) and vinyl chloride (2.8 ug/L & 2.6 ug/L) in the GSB-7 and duplicate samples were nearly identical. Similarly, the concentrations of arsenic (27 ug/L & 29 ug/L) and barium (220 ug/L & 220 ug/L) in the GSB-7 and duplicate sample were also nearly identical. No PNAs were detected in the GSB-7 or duplicate groundwater sample.

The mask duplicate sub-slab soil gas sample was collected from location SUB-3. The detection of contaminants of concern in the SUB-3 sample was limited to tetrachloroethene at a concentration of 8,200 ppbv. The detection of contaminants of concern in the duplicate was also limited to tetrachloroethene at a concentration of 8,200 ppbv.

The analytical results for the duplicate samples indicate that no concerns were identified relative to the ability of the laboratory to replicate data.

Sub-Slab Soil Gas Sampling – Tracer Gas

In accordance with MDEQ Operation Memorandum No. 4- Attachment 4; Envirologic utilized a trace gas during the sub-slab sampling event. Envirologic wetted paper towels with isopropyl alcohol (provided by Fibertec) and placed the wetted towels on fittings associated with the sub-slab sample points and sum canisters. The purpose of the tracer gas was to evaluate whether or not the suma canisters were truly evaluating sub-slab conditions or were being diluted with ambient air. Isopropyl alcohol and propylene (attributed to the isopropyl alcohol) were detected in the majority of the sub-slab samples. However, the concentrations of isopropyl alcohol did not exceed the 10% threshold limit detailed in Op. Memo. No. 4. As such, the sub-slab sample results are believed to be representative of subsurface conditions and do not reflect results diluted at unacceptable levels.

Laboratory Data

Fibertec provided a Quality Assurance Report for the volatile, semi-volatile and metals Laboratory Batches. Envirologic conducted a comparative analysis of the matrix spike and matrix spike duplicate (MS/MSD) results. The purpose of MS/MSD samples is to verify the accuracy and precision of the laboratory operations. The reported % recovery for select metals in soil (aluminum, arsenic, barium, copper, lead, and selenium) for the MS/MSD samples was outside quality control limits due to matrix interference. VOCs, PNAs, and metals in the MS and MSD samples were within acceptable limits.

Data Reduction and Processing

Limited data reduction and processing was conducted. The field notes were composed by Envirologic Project Manager Erik Peterson. The analytical laboratory data sheets were reviewed and reduced into a table for the Phase II ESA report by Envirologic Project

Manager Erik Peterson. The Phase II ESA report was reviewed by Associate Vice President and Senior Environmental Scientist David Stegink.

STATISTICAL TEST

Several statistical methods were used for the laboratory data. The first statistical analysis was the comparison of the actual reporting limit to the laboratory standard reporting limit. For the collected soil samples, elevated reporting limits were identified for vinyl chloride. The reporting limits exceed the Residential Drinking Water Protection criterion. Based upon the lack of detection of volatile halocarbon degredation compounds in the soil samples, the elevated reporting limits do not represent a concern for data evaluation. Elevated reporting limits for PNAs in sample GSB-4 @ 0.5 ft. were also identified. However, the reporting limits do not exceed Residential Cleanup criteria. . The second statistical analysis was the direct comparison of the detected analytes to the cleanup criteria. Conclusions could be drawn from a direct comparison of contaminant and cleanup concentrations and thus further statistics were not employed to develop background concentrations.

CONCLUSIONS

All of the data collected has been verified and is valid to make decisions for the DQOs. The data presents conditions that would logically be expected based upon the identified site use history and previous analytical results.

H: Project/Project K/Kzoo County\ BRA/Goodwill/PhaseI&II\Data Validation

ATTACHMENT E

NOTICE OF MIGRATION OF CONTAMINATION

June 10, 2009

Gratz Investments, LLC
15735 Littlefield Lane
Grand Haven, MI 49456

RE: Notice of Migration of Contamination, Goodwill Industries of SW Michigan, Inc., 2700 N. Pitcher St., Kalamazoo, Michigan

Dear Gratz Investments, LLC

Attached, please find the *Notice of Migration of Contamination* for the above-referenced property. The notice is being provided to you on behalf of Brown Family Holdings, LLC as the prospective new owner of the above-referenced site.

The notice is provided pursuant to the requirements of Part 201 of the Michigan Natural Resource and Environmental Protection Act, 1994 PA 451 as amended; specifically Rule 299.51017 of the Part 10 Rules. Rule 299.51017 requires that an owner or operator of a facility notify the MDEQ and affected property owners if they have reason to believe that contamination is likely to be emanating from the property and migrating beyond the boundaries of the property that he or she owns. As you are presumably aware, hydrogeologic investigation activities conducted by Goodwill in September of 2007 indicate the presence of volatile halocarbons in groundwater on the Goodwill site as well as the adjacent parcel to the south. This Notice is being provided to you as a result of the proposed transaction.

Brown Family Holdings, LLC is a new owner of the site. Brown Family Holdings, LLC is not liable for the existing contamination. Our contact with Brown Family Holdings, LLC is Mr. Shawn Brown, 860 Gibson, Kalamazoo, MI 49001

If you have any questions, please do not hesitate to contact our office at (269) 342-1100.

Sincerely,

ENVIROLOGIC TECHNOLOGIES, INC

Erik D. Peterson
Project Manager

David A. Stegink
Associate Vice President

Attachment

H:\Projects_K\KzooCo\Brownfield Redevelopment Authority\Former Goodwill\NoticeofMigrationCoverLetter.doc

For DEQ Use Only
ITS # _____
Site ID #_____
Category Code: _____

MICHIGAN DEPARTMENT OF ENVIRONMENTAL QUALITY
REMEDIATION AND REDEVELOPMENT DIVISION

NOTICE OF MIGRATION OF CONTAMINATION

(Under the authority of Part 201, Natural Resources and Environmental Protection Act, 1994 Act 451, as amended, (NREPA) and the Rules promulgated thereunder)

An owner or operator of property that is a facility, and/or who is subject to MCL 324.20114, and who has reason to believe that a hazardous substance is emanating from, has emanated from, or is likely to be emanating from the property and migrating beyond the boundaries of the property that he or she owns or operates is required under R 299.5522 and R 299.51017(1) to notify the Michigan Department of Environmental Quality ("DEQ") and affected property owners, unless he or she is exempt from MCL 324.20107a (see MCL 324.20107a(4) for exemptions), or unless he or she has provided the notice required by MCL 324.21309a. Submission of this notice does not fulfill the notification requirements of MCL324.21309a.

The notice must be provided within 45 days after the owner or operator has reason to believe that hazardous substances have migrated, or are likely to have migrated, to or beyond the boundary of his or her property (see R 299.51017 and R 299.5522 for exceptions). If a person is required to provide additional notice as a result of the changes in R 299.51017 that took effect on December 21, 2002, then that additional notice shall be provided not later than September 21, 2003.

Use of this form is mandatory for the notice required by R 299.51017(1) and may also be used by parties subject to MCL 324.20114 to provide notice required by R 299.5522. This form may also be used to provide notice to affected property owners as required by those rules.

If a person holds a permit for an oil and gas well under Part 615, Supervisor of Wells, of the NREPA and there is a release from the oil and gas exploration or production activities, that person shall give notice to the DEQ and to the owner of the surface rights of the property.

If a person holds an easement and there is a release from the easement holder's activities, that person shall provide notice to the DEQ and to the grantor of the easement, or the grantor's successor in interest, if any.

Completing this notice in no way relieves a person who is subject to MCL 324.20114 from the responsibility to undertake required response activities.

This notice must be sent to the DEQ office that serves the county in which the property is located. A list of DEQ offices is available at www.michigan.gov/bea, or by calling the Remediation and Redevelopment's Lansing office at 517-373-9837. The DEQ will not prepare acknowledgement of receipt of these notices. The sender is responsible for sending the report using a method that provides proof of delivery if such proof is desired. Please label the outside of the envelope "Migration Notice." Additional guidelines for the compliance with the requirements of R 200.51017(1) or R 299.5522 are available at www.michigan.gov/bea.

THIS NOTICE IS PROVIDED PURSUANT TO: **R 299.5522** ☐ **R 299.51017** ☒
(check both, if applicable)

Please provide the following information as completely as possible.

1. Name and location of the property that hazardous substances are emanating from:

   Name: Former Goodwill Industries of SW Michigan
   Address: 2700 N. Pitcher St.
   Location: Kalamazoo Township
   City/County: Kalamazoo County
   Property Tax Identification Number, or if applicable, the ward and item number: 06-03-460-010

2. Status relative to the property:
   (Check one or both, as applicable.)

   Owner ☒
   Operator ☐

Provide any additional ID numbers associated with the property (e.g., EPA ID No., BEA No., Part 213 facility ID No., etc.): Part 213 ID # 00003454

3. Name, address, and telephone number of the property owner, operator, or other party submitting the notice:
   Name: Brown Family Holdings, LLC
   Address: 860 Gibson
   City/State: Kalamazoo/Michigan
   Telephone number: 2693816984

4. Name, address and telephone number of a contact person familiar with the content of the notice:
   Name: Envirologic Technologies, Inc. - Erik Peterson
   Address: 2960 Interstate Parkway
   City/State: Kalamazoo/Michigan
   Telephone: 2693421100

5. If this Notice is provided pursuant to R 299.51017, provide the address and other location information for the *adjacent* property(s) onto which contamination is migrating, has migrated, or is likely to migrate. If this Notice is provided pursuant to R 299.5522, provide the address and other location information for *each* property onto which contamination has migrated. Notice should be sent to the property owner of record. If the impacted property is owned by the State of Michigan, notice should be sent to the department managing the property (i.e. a prison, state park, etc.). Notices to the Michigan Department of Transportation (MDOT) for state owned roadways should be sent to Ms. Heather Hicks, MDOT-Bureau of Transportation Planning, 425 W. Ottawa Street, P.O. Box 30050, Lansing, MI 48989. If it isn't readily apparent what state department manages the property, notices should be sent to Mr. Thomas Saxton, Tenant and Land Services, Department of Management and Budget, 1st Floor Lewis-Cass Building, P.O. Box 30026, Lansing, MI 48909.

   Address: 2650 N. Pitcher St.
   City/State: Kalamazoo Township/Michigan
   Property Tax ID number: 390603460020
   Other:
   Notified? No ☐ Yes ☒ Date: 6/11/09

   Address:
   City/State:
   Property Tax ID number:
   Other:
   Notified? No ☐ Yes ☐ Date:

   Address:
   City/State:
   Property Tax ID number:
   Other:
   Notified? No ☐ Yes ☐ Date:

   Address:
   City/State:
   Property Tax ID number:
   Other:
   Notified? No ☐ Yes ☐ Date:

   Address:
   City/State:
   Property Tax ID number:
   Other:
   Notified? No ☐ Yes ☐ Date:

   (Attach additional pages as needed)

6. Complete the Table on Page 3 of this Form for each hazardous substance which has migrated, or is likely to have migrated, beyond the property boundary at a concentration that exceeds a Generic Residential Cleanup Criterion developed by the DEQ pursuant to MCL 324.20120a(1). Complete and attach additional copies of Page 3, if necessary, to list all hazardous substances that must be reported. Include a scaled map or drawing that shows the location of sampling points identified on the Table on Page 3, the property boundaries, and the adjacent property owners if providing notice pursuant to R 299.1017(1) or all impacted property owners if providing notice pursuant to Rule 299.5522.

7. Provide a summary of the information which shows that contamination is emanating from, or has emanated from, and is present beyond the boundary of the source property at a concentration which exceeds that allowed by MCL 324.20120a(1)(a). This summary shall identify the environmental media affected, specific hazardous substances, and the concentrations of those hazardous substances in all affected environmental media at the property boundary and in any sample locations beyond the property boundary. The summary shall also describe the basis for the conclusion that the contamination is emanating, has emanated, or is present beyond the boundary of the source property, including whether the conclusion is based on groundwater analytical data or fate and transport modeling, both, or neither.

   GROUNDWATER ANALYTICAL DATA FOR MONITORING WELLS LOCATED ALONG THE SOUTHERN BOUNDARY OF THE SUBJECT PROPERTY AND WELLS LOCATED ON THE ADJACENT PARCEL SOUTH OF THE SUBJECT PROPERTY INDICATE THE PRESENCE OF VOLATILE HALOCARBONS IN EXCESS OF RESIDENTIAL/INDUSTRIAL DRINKING WATER AND GROUNDWATER-SURFACE WATER INTERFACE PROTECTION CRITERIA.

8. If the person making this notice has reason to believe that a migrating hazardous substance has affected, or is likely to affect, a private or public water supply, then that water supply must be identified here:

	YES	NO
9. Is this notice being submitted within the timeframes established under R 299.5522 and/or R 299.51017, as applicable?	☒	☐
10. Is this notice in addition to a notice submitted prior to *December 21, 2002?* (R 299.51017(4)(c))	☐	☒
11. Is this notice related to an oil and gas well permit (R 299.51017(2))? Permit #:	☐	☒
12. Is this notice related to an easement (R 299.51017(3))? (NOTE: All easement grantors *must* receive this notice.)	☐	☒
13. Has surface water been affected (R 299.51017(1) and R 299.5522(2))? (If yes, please identify the affected surface water body.)	☐	☒

CERTIFICATION:

With my signature below, I certify that I am the owner of the facility or that I am legally authorized to execute this notice on behalf of the owner or operator named on this form, and that to the best of my knowledge and belief the above representations are complete and accurate. I understand that intentionally submitting false information to the DEQ is a felony and may result in fines up to $25,000 for each violation.

Signature Shawn E. Brown Date June 11, 2009
(Owner or person legally authorized to bind the person making this report)

Name (Typed or Printed) Shawn Brown

Title (Typed or Printed) President/Member

MICHIGAN DEPARTMENT OF ENVIRONMENTAL QUALITY
REMEDIATION AND REDEVELOPMENT DIVISION

NOTICE OF MIGRATION OF CONTAMINATION

(Under the authority of Part 201, Natural Resources and Environmental Protection Act, 1994 Act 451, as amended, (NREPA) and the Rules promulgated thereunder)

See Item 6 on Page 2 of this Form for instructions to be used in completing this Table. Attach additional pages if necessary. The information to be included in each column of the Table is:

Column A Name of hazardous substance.
Column B Chemical Abstract Service (CAS) Number for the hazardous substance.
Column C Maximum hazardous substance concentration measured on the property, expressed in parts per billion (e.g., ug/L or ug/Kg). Report maximum concentration separately for each environmental medium.
Column D Sample location for Column C (relate to label on map).
Column E Environmental medium in which concentration reported in Column C was measured (e.g., soil or groundwater).
Column F Distance from point of maximum measured concentration (Column D) to property boundary, in direction of contaminant migration, if direction is known or can reasonably be inferred. If direction is unknown, list distance to nearest property boundary.
Column G Direction of contaminant migration, if known.
Column H Concentration closest to property boundary, if known. If a concentration lower than the maximum concentration reported in Column C has been measured at a point closer to the property boundary in the direction of contaminant migration, use Column I to list the concentration that was measured closest to the property boundary in the direction of contaminant migration.
Column I Sample location for Column H (relate to label on map).
Column J Environmental medium for measurement reported in Column H, if applicable.

A Hazardous Substance	B CAS Number	C Maximum Concentration	D Sample Location for "C"	E Environmental Medium for "C"	F Distance to Property Boundary	G Direction of Migration	H Boundary Concentration	I Sample Location for "H"	J Environmental Medium for "H"
Tetrachloroethene	127184	400	MW-6 @ 10.5 ft.	GW	110 ft.	SE	17	MW-8 @ 6.75 ft.	GW
Trichloroethene	79016	58	TMW-18 @ 19 ft.	GW	5 ft.	SE	58	TMW-18 2@ 19 ft.	GW
cis-1,2-dichloroethene	156592	55	MW-8 @ 6.75 ft.	GW	5 ft.	SE	55	MW-8 @ 6.75 ft.	GW
Vinyl Chloride	75014	37	MW-8 @ 6.75 ft.	GW	5 ft.	SE	37	MW-8 @ 6.75 ft.	GW

Total Number Samples Collected: 74 Total Number of Samples Exceeding Criteria: 68

NOTICE OF MIGRATION OF CONTAMINATION

(Under the authority of Part 201, Natural Resources and Environmental Protection Act, 1994 Act 451, as amended, (NREPA) and the Rules promulgated thereunder)

A scaled map or drawing showing these locations and the property boundaries must be submitted with this Notice.

45244A PCE CONCENTRATIONS / WBL101107 / 1:1

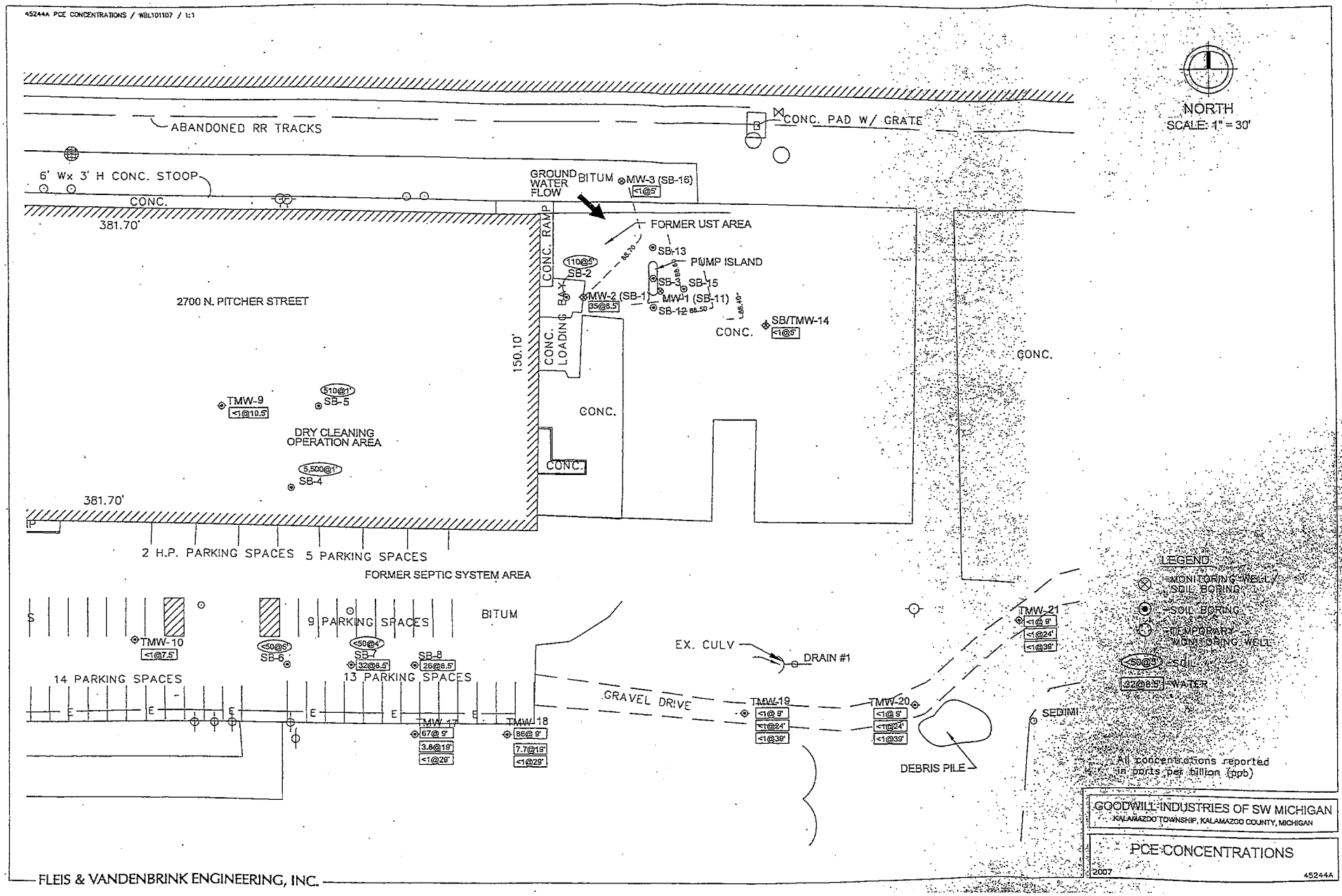

GOODWILL INDUSTRIES OF SW MICHIGAN
KALAMAZOO TOWNSHIP, KALAMAZOO COUNTY, MICHIGAN

PCE CONCENTRATIONS

2007

45244A

FLEIS & VANDENBRINK ENGINEERING, INC.

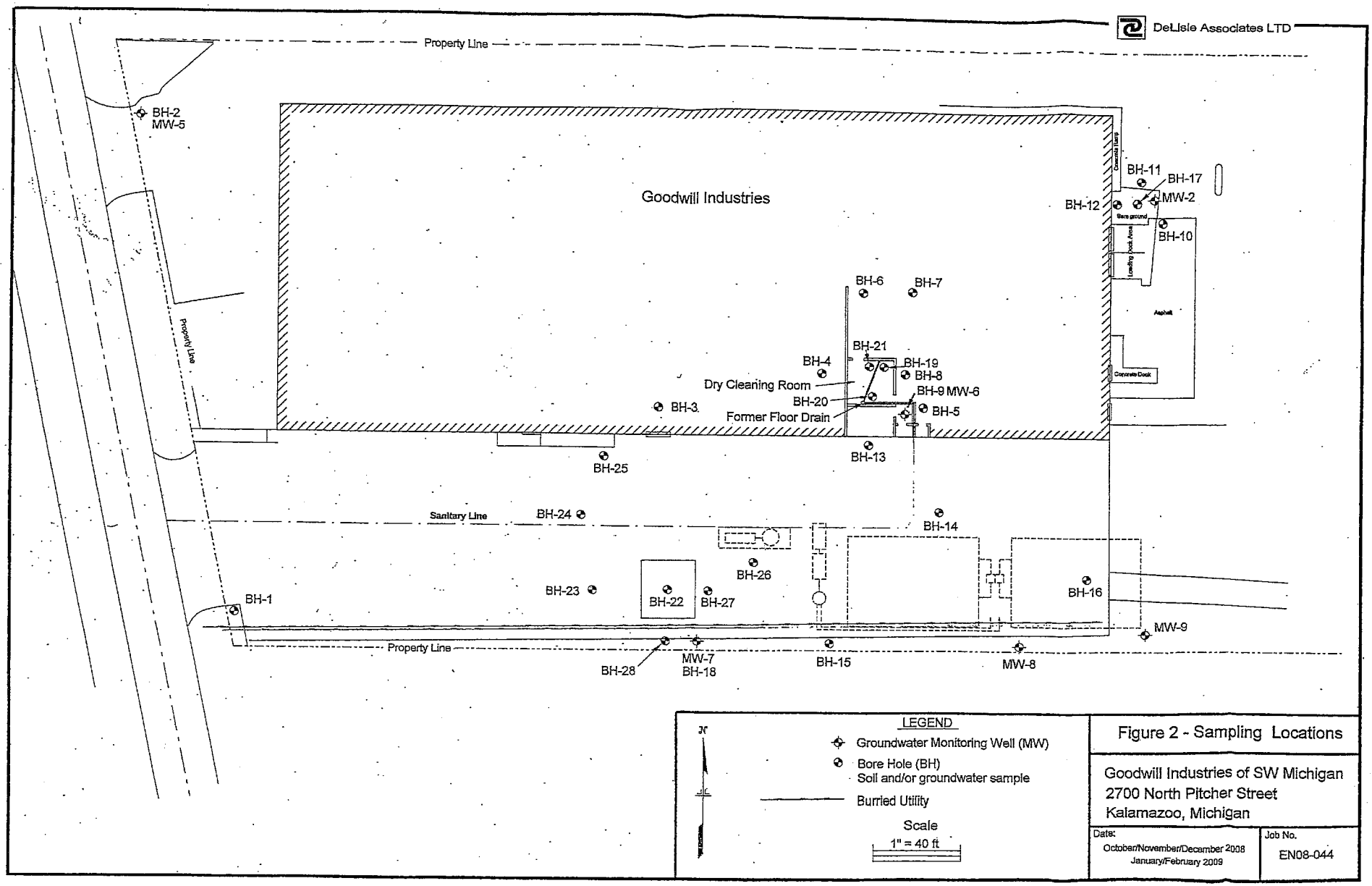
DeLisle Associates LTD
Property Line
Goodwill Industries
BH-2
MW-5
BH-11
BH-17
MW-2
BH-12
BH-10
BH-6
BH-7
BH-21
BH-4
BH-19
BH-8
Dry Cleaning Room
BH-9 MW-6
BH-20
BH-3
BH-5
Former Floor Drain
BH-13
BH-25
Sanitary Line
BH-24
BH-14
BH-26
BH-23
BH-22
BH-27
BH-16
BH-1
MW-9
Property Line
BH-28
MW-7
BH-18
BH-15
MW-8
LEGEND
Groundwater Monitoring Well (MW)
Bore Hole (BH)
Soil and/or groundwater sample
Burried Utility
Scale
1" = 40 ft
Figure 2 - Sampling Locations
Goodwill Industries of SW Michigan
2700 North Pitcher Street
Kalamazoo, Michigan
Date:
October/November/December 2008
January/February 2009
Job No.
EN08-044

SECTION 7A COMPLIANCE ANALYSIS

OF

FORMER GOODWILL INDUSTRIES OF SW MICHIGAN
2700 N. PITCHER ST.
KALAMAZOO TOWNSHIP
KALAMAZOO COUNTY, MICHIGAN

Prepared For:

Brown Family Holdings, LLC
860 Gibson St.
Kalamazoo, MI 49001

&

Beckan Industries, Inc.
860 Gibson St.
Kalamazoo, MI 49001

JUNE 9, 2009

Prepared by:

Erik D. Peterson, David A. Stegink
ENVIROLOGIC TECHNOLOGIES, INC.
2960 Interstate Parkway
Kalamazoo, Michigan 49048
(269) 342-1100

Table of Contents

BACKGROUND **2**

DETAILED CHARACTERISTICS OF PROPERTY USE **3**

HAZARDOUS SUBSTANCE INFORMATION **5**

SOIL/GROUNDWATER ANALYTICAL RESULTS 15
ABANDONED CONTAINERS 16
CONTAMINANT FATE AND TRANSPORT 17
Exposure Pathways *18*

PLAN FOR RESPONSE ACTIVITY **28**

EVALUATION AND DEMONSTRATION OF COMPLIANCE WITH SECTION 7A OBLIGATIONS **29**

EXACERBATION 29
DUE CARE 29
REASONABLE PRECAUTIONS 30
CONTINUING OBLIGATIONS 30

REFERENCES **31**

List of Tables

TABLE 1: SUMMARY OF ENVIROLOGIC SOIL ANALYTICAL RESULTS 9-10

TABLE 2: SUMMARY OF ENVIROLOGIC GROUNDWATER ANALYTICAL RESULTS 11

TABLE 3: SUMMARY OF ENVIROLOGIC SUB-SLAB SOIL GAS ANALYTICAL RESULTS 11

TABLE 4: COMPARISON OF MAXIMUM "FACILITY" SOIL CONTAMINANT CONCENTRATIONS TO RELEVANT INDUSTRIAL CLEANUP CRITERIA 14

TABLE 5: COMPARISON OF MAXIMUM "FACILITY" GROUNDWATER CONTAMINANT CONCENTRATIONS TO RELEVANT INDUSTRIAL CLEANUP CRITERIA 14

List of Appendices

APPENDIX A: FIGURES

FIGURE 1: LOCATION MAP

FIGURE 2: SITE PLAN

FIGURE 3: SITE PLAN WITH ENVIROLOGIC SAMPLING LOCATIONS

DELISLE FIGURE 2: SAMPLING LOCATIONS

DELISLE FIGURE 6: SVE SYSTEM WELL PIPING LAYOUT

DELISLE SITE MAP-1: SOIL SAMPLING AND SOIL GAS WELL (SGW) LOCATIONS

DELISLE SITE MAP-2: VAPOR EXTRACTION RADIUS OF INFLUENCE

APPENDIX B: NOTICE OF MIGRATION OF CONTAMINATION

APPENDIX C: SVE SYSTEM PERFORMANCE DOCUMENTATION

SECTION 7A COMPLIANCE ANALYSIS

OF

FORMER GOODWILL INDUSTRIES OF SW MICHIGAN
2700 N. PITCHER ST.
KALAMAZOO TOWNSHIP
KALAMAZOO COUNTY, MICHIGAN

BACKGROUND

The subject property consists of one parcel of land occupying approximately 7.3 acres. The site is developed with an approximately 58,500-square-foot warehouse/office building resting on concrete slab on grade. Asphalt cover is in place surrounding the building. A combination of asphalt/concrete cover is also in place over portions of the property located east of the subject building. The remainder of the subject property consists of grass/scrub field and lightly wooded areas. A cellular phone tower is located on the eastern portion of the subject property.

Historic data sources indicate that the site was initially developed by the Upjohn Pharmaceutical Company for warehousing activities sometime prior to 1950. Since approximately 1960, Goodwill Industries of SW Michigan has owned/operated the site. Historic Goodwill site use activities involved the former presence of a gasoline underground storage tank near the northeast corner of the subject building as well as the use of tetrachloroethene in support of former dry cleaning operations.

The subject property is identified as an "open" Leaking Underground Storage Tank (LUST) site (ID # 00003454) based upon a gasoline release reported in 2007 (Release # C-0148-07). Previously completed site characterization activities as well as a Phase II ESA completed by Envirologic in June of 2009 indicate the presence of petroleum-based volatile organic compounds, volatile halocarbons, and metals in soil and groundwater on the subject property at "facility" concentrations. The analytical results demonstrate that the subject property meets the definition of a "facility," as defined by Part 201 of NREPA (1994 PA 451).

DETAILED CHARACTERISTICS OF PROPERTY USE

The subject property is developed with a 58,500-square-foot building resting on concrete slab on grade. Asphalt cover is in place surrounding the building. An asphalt covered parking lot is located on the south side of the building. A combination of asphalt/concrete cover is also in place over portions of the property located east of the subject building. The remainder of the subject property consists of grass/scrub field and lightly wooded areas. A cellular phone tower is located on the eastern portion of the subject property. A Kalamazoo County drain, the Zantman drain, is present along the eastern boundary of the subject property. Refer to Figure 2, Appendix A for a site plan detailing site features.

The subject property is serviced with the following municipal utilities through the City of Kalamazoo: water, sanitary sewer and storm sewer. Consumers Energy provides natural gas and electric service to the subject property.

A sanitary sewer line is present on the south side of the subject building. Natural gas service is present on the north side of the subject building. No record of the current or historic presence of private water supply wells or septic systems in association with the subject property was on file with the Kalamazoo County Health Department. An approximately 50,000-gallon water tower is present on the eastern portion of the subject property. Fire Chief Farr reports that the water tower was historically present as part of the fire suppression system for the subject property. Chief Farr reports that the water tower is no longer used.

Although not indicated in Health Department records, site plans of the subject property provided by Goodwill indicate the former presence of two septic systems in association with the site. The septic systems were located beneath the asphalt parking lot on the south side of the subject property. Site plan information provided by DeLisle & Associates, Inc. indicates the presence of two holding tanks and two leach fields associated with the septic system. The site plan indicates that a floor drain in the former dry cleaning room of the subject building discharged to the septic system. Kalamazoo Township Assessor information indicates that the subject property was connected to municipal sanitary sewer in November of 1995. Goodwill has indicated that the septic tanks were properly abandoned subsequent to completion of the municipal sanitary sewer connection.

Sampling activities have been conducted by both Fleis & Vandenbrink and DeLisle in association with the septic system. Perchloroethene and the dehalogenation compounds

trichloroethene, cis-1,2,-dichloroethene, and vinyl chloride have been identified in groundwater in excess of the Residential Drinking Water criteria in association with the former septic system leach fields. As indicated, the use of the septic system ceased subsequent to connection of the existing municipal sanitary sewer connection for the subject building. The floor drain formerly present in the dry cleaning room has been abandoned. No indications of the presence of additional floor drains within the subject building were identified through the course of multiple site inspections. There is no potential for future discharge to the septic system.

A culvert drain and a Kalamazoo County drain, the Zantman drain, are present on eastern portions of the subject property. In 2007, Fleis & Vandenbrink collected a sediment sample from the drain outfall and from within the Zantman drain. The samples were analyzed for PCBs in order to investigate the potential for impact. No PCBs were identified above the method detection limit in the sediment samples. The analytical results indicate that the subject property has not been impacted by the presence of the culvert drain and the Zantman drain.

According to the Kalamazoo Township Assessor's Office, the subject property is zoned I – Industrial. Brown Family Holdings, LLC intends to purchase the subject property and lease the site to Beckan Industries, Inc. Approximately 10,000 square feet on the east end of the subject building will be leased by Goodwill for the warehousing of clothes, shoes, and books. Beckan Industries, Inc. will utilize the remainder of the subject building in support of precision machining operations.

HAZARDOUS SUBSTANCE INFORMATION

Multiple investigations into the environmental integrity of the subject property have previously been conducted. A summary of the previous investigations is provided below. Refer to the Envirologic Phase I & II ESA for further details.

Fleis & Vandenbrink completed a Hydrogeologic Investigation of the subject property on behalf of Goodwill in May of 2008. The Fleis & Vandenbrink investigation was completed to address the following areas of concern:

- The lack of documentation or assessment regarding the former presence of a gasoline UST on the subject property;
- The potential for soil and groundwater impact associated with the historic use of a septic system on the subject property;
- The potential for PCBs impact to the subject property from off-site discharge into the Kalamazoo County Zantman drain present on the eastern portion of the site;
- The historic use of tetrachloroethene on site associated with former dry cleaning operations.

The scope of the investigation included the installation of 37 Geoprobe™ soil borings for the collection of soil and groundwater samples; the installation of two hand-auger borings within the subject building; and the collection of two sediment samples.

Fleis & Vandenbrink initiated site characterization activities on the subject property at the request of Goodwill in June of 2007. Three soil borings were initially installed in the former UST area at that time. A release from the UST was reported to the MDEQ on July 19, 2007 (Release # C-0148-07). The subject property is identified by the MDEQ as an "open" LUST. The release was reported by Fleis & Vandenbrink due to stained soils and petroleum odors encountered in the former pump island location. A total of nine soil borings have been installed northeast of the subject building by Fleis & Vandenbrink to investigate the former gasoline UST vault and dispenser area. Identification of petroleum impact to soil associated with the former gasoline UST has been limited to ethylbenzene, 1,2,4-TMB, 1,3,5-TMB, xylenes, and naphthalene at one location in shallow soil beneath the former dispenser (SB-3). The reported concentrations of naphthalene and ethylbenzene exceed the Groundwater-Surface Water Interface Protection (GSIP) criteria. The concentrations of TMBs and xylenes exceed the Drinking Water Protection and GSIP criteria. Concrete cover remains in place over the former dispenser location (SB-3). It

should be noted that tetrachloroethene was also identified in soil in the former UST vault in excess of the Residential Drinking Water Protection criterion.

Four permanent groundwater monitoring wells (MW-1 through MW-4) have been installed northeast of the subject building in order to characterize groundwater conditions relative to the gasoline UST release. The initial groundwater analytical results from 2007 indicated the presence of 1,2,4-TMB, naphthalene, and ethylbenzene at concentrations in excess of the Ground-Surface Water Interface (GSI) criteria. The concentration of lead from a temporary groundwater sample down gradient of the former UST dispenser exceeded the Residential/Industrial Drinking Water criteria. The concentration of lead at this location (18 ug/L) also exceeded a site specific GSI criterion of 14 ug/L calculated by Fleis & Vandenbrink.

Fleis & Vandenbrink have continued to conduct UST release response activities on behalf of Goodwill. Response activities have consisted of monitoring groundwater conditions within MW-1 through MW-4. The most recent data available is a Quarterly Groundwater Sampling Report dated January 23, 2009. No contaminants of concern were identified above the method detection limit in the groundwater samples. It is the understanding of Envirologic that Fleis & Vandenbrink intend to pursue MDEQ "closure" for the UST release through monitoring of the natural attenuation of groundwater contamination and placement of use restrictions on the subject property. Use restrictions will presumably consist of prohibiting the development of groundwater as a potable supply and the potential maintenance of impervious cover over limited areas of soil impact.

No indications of PCBs impact associated with sediments from the drainage culvert or Zantman drain were identified.

Volatile halocarbon impact was identified beneath the building in association with former dry cleaning operations and exterior locations associated with the former septic system on the south side of the subject property. Specifically, the concentration of tetrachloroethene identified in soil from two soil samples collected beneath the building exceeded the current Industrial Drinking Water Protection criterion. The concentrations of tetrachloroethene in groundwater from the former septic system leach field exceed the Industrial Drinking Water criterion. The concentration of tetrachloroethene in groundwater along the southern property boundary exceeds both the Industrial Drinking Water criterion and the Groundwater-Surface Water Interface (GSI) criterion. In addition to tetrachloroethene, the volatile halocarbon degradation products trichloroethene and

vinyl chloride were detected in groundwater along the southern property boundary at concentrations in excess of Industrial Drinking Water criteria.

Fleis & Vandenbrink have indicated that vinyl chloride impact to groundwater identified along the western boundary of the subject property is attributable to migration emanating from the off-site Borroughs property. MDEQ file information indicates the presence of a groundwater monitoring well on the western portion of the subject property (MW-19d) installed to investigate volatile halocarbon groundwater impact emanating onto the subject property from the off-site Borroughs property (3002 N. Burdick St.). The most recent MDEQ file information for the Borroughs site is a Fourth Quarter 2008 Groundwater Monitoring Event completed by Fishbeck, Thompson, Carr & Huber. The report presents the analytical results for groundwater monitoring well MW-19d in addition to the well located down gradient of the former gasoline UST (MW-4). The MW-19d results indicate the presence of vinyl chloride in groundwater in excess of the Industrial Drinking Water criterion. File information indicates that Borroughs is pursuing the placement of a groundwater use restriction on the subject property (Goodwill site) in support of MDEQ "closure" for the release emanating onto the subject property.

Based upon the volatile halocarbon contaminant conditions identified by Fleis & Vandenbrink, Goodwill engaged DeLisle Associates LTD to conduct site characterization activities in association with volatile halocarbon impact on the subject property. A summary of DeLisle investigation activities is provided below. Refer to the *Additional Investigation Activities* (Appendix C) and *Site Investigation Report and Interim Response Activities for Soils Beneath the Building* for further details (Appendix F of Phase I ESA).

DeLisle has installed 41 soil borings across the subject property for the collection of soil and groundwater samples. Select sample locations have been completed with permanent groundwater monitoring wells on the subject property. In addition, seven soil gas sampling wells have been installed within the subject building. The sampling has focused on the following areas: former dry cleaning rooms within the south side of the building; former solvent storage building and septic systems located along the southern property boundary; and the former UST vault area near the northeast corner of the subject building. The volatile halocarbons tetrachloroethene, trichloroethene, cis-1,2-dichloroethene and vinyl chloride were identified in soil beneath the building and exterior former septic system and UST vault locations at concentrations in excess of the Residential Drinking Water Protection and/or Groundwater-Surface Water Interface Protection (GSIP) criteria. The concentrations of tetrachloroethene in soil beneath the

building at two locations proximal to a former dry cleaning room (BH-4, BH-8) are in excess of the Industrial Soil Volatilization to Indoor Air Inhalation criterion.

Based upon the potential for unacceptable health exposures relative to occupancy of the building associated with the concentrations of tetrachloroethene in soil, DeLisle collected three ambient air samples for volatile halocarbons analysis from within the building on November 10, 2008. The sampling activities and results are presented in a report prepared by DeLisle in November of 2008. The following sample locations were selected by DeLisle: the office/administrative area within the western portion of the building, an area of the warehouse to be occupied by Beckan Industries, Inc. in the future, and from within the former dry cleaning room. No recordable levels of contaminants of concern were identified in the three samples. The limited air sampling results indicated that no unacceptable health exposures relative to building occupancy were identified at that time. However, MDEQ guidance indicates that a one-time sampling event is not sufficient to determine that the potential for unacceptable health exposures relative to occupancy of the building does not exist.

DeLisle has completed installation of a Soil Vapor Extraction (SVE) system within the subject building in order to address the contaminant conditions identified beneath the building. The system consists of four (4) two-inch diameter wells with a five-foot screened interval located in southern portions of the building. The system is set up to run each extraction well at 25 SCFM each for a total air flow rate of 100 SCFM. A site plan detailing the SVE system layout along with additional detail on system performance is presented within Appendix C. Ongoing operation of the SVE system is intended to achieve two goals: reduction in soil contaminant concentrations through the carbon treatment of soil gas vapors and; creation of a negative pressure environment beneath the building within areas of identified soil impact. Maintenance of negative pressure beneath appropriate portions of the building will preclude the potential for unacceptable health exposures associated with occupancy of the building relative to the volatilization of contaminants to indoor air.

Volatile halocarbon impact to groundwater has also been identified as a result of the DeLisle investigation. Tetrachloroethene and the dehalogenation daughter compounds trichloroethene, cis-1,2-dichlorothene, and vinyl chloride have been identified in groundwater across the subject property at concentrations in excess of Residential/ Industrial Drinking Water and/or GSI criteria. The concentrations of volatile halocarbons identified along the southern property boundary, south of the former septic system, indicate that contaminants are migrating beyond the subject property onto the parcel to

the south in excess of Residential Drinking Water and/or GSI criteria. Sampling completed by DeLisle included the vertical characterization of groundwater from the following general intervals: 10-12 ft. bgl; 19-21 ft. bgl; and 35-37 ft. bgl. The specific intervals sampled at any one given location may have varied slightly based upon site conditions. Although a potential increase in concentration with depth might be expected for dense non-aqueous phase liquids (DNAPLs) such as volatile halocarbons, no consistent trend to the contaminant concentrations relative to depth was identified. A slight increase in vinyl chloride concentrations at depth was noted for multiple sample locations. The varying ranges of identified contaminant concentrations did not result in exceedances of additional exposure pathways beyond the Drinking Water and GSI Cleanup criteria. As indicated, groundwater impact identified on the western portion of the subject property has been attributed by Fleis & Vandenbrink and DeLisle to the migration of volatile halocarbon impact from the off-site Borroughs property located hydraulically up gradient.

In addition to the volatile halocarbons; bromomethane was identified in soil beneath the asphalt parking lot on the south side of the building. The concentrations of bromomethane identified in soil exceed the Residential Drinking Water Protection and/or GSI Protection criteria. At this time it is not clear if the bromomethane impact is associated with the former presence of a solvent storage building on the southern portion of the property.

Finally, tetrachlorothene impact to shallow soils in excess of Industrial Drinking Water Protection and/or GSIP criteria was also identified in the former UST vault area near the northeast corner of the subject building.

In order to further characterize site conditions in support of due diligence and "due care" considerations, Envirologic conducted the following Phase II ESA sampling activities: a ground penetrating radar (GPR) geophysical survey was completed on March 2, 2009; the installation of 11 Geoprobe™ soil borings for the collection of soil and groundwater samples was completed on March 3, 2009; the collection of interior sub-slab soil gas samples was completed on two occasions: March 6 and March 11, 2009. Refer to Figure 3, Attachment A for a site plan detailing boring and sampling locations. A summary of the Phase II ESA sampling results is presented below. Refer to the Phase I & II ESA report for further details.

The Envirologic soil analytical results are summarized in Table 1, along with a comparison to relevant Residential Cleanup criteria. The Envirologic groundwater

analytical results are presented in Table 2, along with a comparison to Residential Cleanup criteria. Based upon the lack of historic plating activities in association with the subject property, the total chromium results are compared to the Residential Cleanup criteria for trivalent chromium (chromium III).

Table 1: Summary of Envirologic Soil Analytical Results & Comparison to Residential Cleanup Criteria

Volatile Organic Compounds																		
Compound	Statewide Default Background Levels	Residential Drinking Water Protection Criteria	Groundwater Surface Water Interface Protection Criteria	Groundwater Contact Protection Criteria	Soil Vol. to Indoor Air Inhalation Criteria	Infinite Source Volatile Soil Inhalation Criteria	Particulate Soil Inhalation Criteria	Residential Direct Contact Criteria	GSB-1 @ 0.5'	GSB-2 @ 0.5'	GSB-3 @ 0.5'	GSB-4 @ 0.5'	GSB-5 @ 0.5'	GSB-6 @ 0.5'	GSB-7 @ 0.5'	GSB-8 @ 0.5'	GSB-9 @ 0.5'	GSB-11 @ 0.5'
Benzene	NA	100	4,000	220,000	1,600	13,000	3.8E+8	180,000	<MDL	<MDL	<MDL	<MDL	<MDL	<MDL	<MDL	<MDL	<MDL	<MDL
Toluene	NA	16,000	2,800	250,000	250,000	2.8E+6	2.7E+10	250,000	<MDL	<MDL	<MDL	<MDL	<MDL	<MDL	<MDL	<MDL	<MDL	<MDL
Ethylbenzene	NA	1,500	360	140,000	87,000	720,000	1.0E+10	140,000	<MDL	<MDL	<MDL	<MDL	<MDL	<MDL	<MDL	<MDL	<MDL	<MDL
Xylenes	NA	5,600	700	150,000	150,000	4.6E+7	2.9E+11	150,000	<MDL	<MDL	<MDL	<MDL	<MDL	<MDL	<MDL	<MDL	<MDL	<MDL
Tetrachloroethene	NA	100	900	88,000	11,000	180,000	5.4E+9	88,000	<MDL	<MDL	<MDL	<MDL	<MDL	<MDL	<MDL	<MDL	<MDL	<MDL
Trichloroethene	NA	100	4,000	440,000	7,100	78,000	1.8E+9	500,000	<MDL	<MDL	<MDL	<MDL	<MDL	<MDL	<MDL	<MDL	<MDL	<MDL
1,2,4-Trimethylbenzene	NA	2,100	570	110,000	110,000	2.1E+7	8.2E+10	110,000	<MDL	<MDL	<MDL	<MDL	<MDL	<MDL	<MDL	<MDL	<MDL	<MDL
1,3,5-Trimethylbenzene	NA	1,800	1,100	94,000	94,000	1.6E+7	8.2E+10	94,000	<MDL	<MDL	<MDL	<MDL	<MDL	<MDL	<MDL	<MDL	<MDL	<MDL
Vinyl Chloride	NA	40	300	20,000	270	4,200	3.5E+8	3,800	<MDL*	<MDL*	<MDL*	<MDL*	<MDL*	<MDL*	<MDL*	<MDL*	<MDL*	<MDL*
All Other VOCs	NA	NA	NA	NA	NA	NA	NA	NA	<MDL	<MDL	<MDL	<MDL	<MDL	<MDL	<MDL	<MDL	<MDL	<MDL

Notes:
1. All sample results in µg/kg (parts per billion)
2. 1 = Reported concentration per Method 8260
2. Result **bolded** where detected, **bolded** and shaded where exceeding applicable cleanup criteria
3. <MDL = Less Than Method Detection Limit, NA = Not Applicable, ND = Not Detected, NLL = Not Likely to Leach, NLV = Not Likely to Volatilize, ID = Insufficient Data to Develop Criterion
4. * = The Method Detection Limit (MDL) for Vinyl Chloride exceeds the Residential Drinking Water Protection criterion
5 Cleanup Criteria from Michigan OP Memo RRD-1, Attachment 1, January 23, 2006

Table 1: Summary of Envirologic Soil Analytical Results & Comparison to Residential Cleanup Criteria (continued)

Polynuclear Aromatic Hydrocarbons																		
Compound	Statewide Default Background Levels	Residential Drinking Water Protection Criteria	Groundwater Surface Water Interface Protection Criteria	Groundwater Contact Protection Criteria	Soil Vol. to Indoor Air Inhalation Criteria	Infinite Source Volatile Soil Inhalation Criteria	Particulate Soil Inhalation Criteria	Residential Direct Contact Criteria	GSB-1 @ 0.5'	GSB-2 @ 0.5'	GSB-3 @ 0.5'	GSB-4 @ 0.5'	GSB-5 @ 0.5'	GSB-6 @ 0.5'	GSB-7 @ 0.5'	GSB-8 @ 0.5'	GSB-9 @ 0.5'	GSB-11 @ 0.5'
Acenaphthene	NA	300,000	4,400	970,000	1.9E+8	8.1E+7	1.4E+10	4.1E+7	<MDL	<MDL	<MDL	**7,200**	<MDL	<MDL	<MDL	<MDL	<MDL	<MDL
Acenaphthylene	NA	5,900	ID	440,000	1.6E+6	2.2E+6	2.3E+9	1.3E+6	<MDL	<MDL	<MDL	<MDL	<MDL	<MDL	<MDL	<MDL	<MDL	<MDL
Anthracene	NA	41,000	ID	41,000	1.0E+9	1.4E+9	6.7E+10	2.3E+8	<MDL	<MDL	<MDL	**35,000**	<MDL	<MDL	**3,600**	<MDL	<MDL	<MDL
Benzo(a)anthracene	NA	NLL	NLL	NLL	NLV	NLV	ID	20,000	<MDL	<MDL	<MDL	**93,000**	<MDL	<MDL	**540**	<MDL	**450**	<MDL
Benzo(a)pyrene	NA	NLL	NLL	NLL	NLV	NLV	1.5E+6	2,000	<MDL	<MDL	<MDL	**100,000**	<MDL	<MDL	**380**	<MDL	**430**	<MDL
Benzo (b) fluoranthene	NA	NLL	NLL	NLL	ID	ID	ID	20,000	<MDL	<MDL	<MDL	**160,000**	<MDL	<MDL	**670**	<MDL	**720**	<MDL
Benzo(ghi)perylene	NA	NLL	NLL	NLL	NLV	NLV	8.0E+8	2.5E+6	<MDL	<MDL	<MDL	**82,000**	<MDL	<MDL	<MDL	<MDL	<MDL	<MDL
Benzo(k)fluoranthene	NA	NLL	NLL	NLL	NLV	NLV	ID	200,000	<MDL	<MDL	<MDL	**44,000**	<MDL	<MDL	<MDL	<MDL	<MDL	<MDL
Chrysene	NA	NLL	NLL	NLL	ID	ID	ID	2.0E+6	<MDL	<MDL	<MDL	**110,000**	<MDL	<MDL	**860**	<MDL	**540**	<MDL
Dibenzo(a,h)anthracene	NA	NLL	NLL	NLL	ID	ID	ID	2,000	<MDL	<MDL	<MDL	**14,000**	<MDL	<MDL	<MDL	<MDL	<MDL	<MDL
Fluoranthene	NA	730,000	5,500	730,000	1.0E+9 (D)	7.4E+8	9.3E+9	4.6E+7	<MDL	<MDL	<MDL	**220,000**	<MDL	<MDL	**2,000**	<MDL	**1,100**	<MDL
Fluorene	NA	390,000	5,300	890,000	5.8E+8	1.3E+8	9.3E+9	2.7E+7	<MDL	<MDL	<MDL	**13,000**	<MDL	<MDL	<MDL	<MDL	<MDL	<MDL
Indeno(1,2,3-cd)pyrene	NA	NLL	NLL	NLL	NLV	NLV	ID	20,000	<MDL	<MDL	<MDL	**100,000**	<MDL	<MDL	<MDL	<MDL	<MDL	<MDL
Naphthalene	NA	35,000	870	2.1E+6	250,000	300,000	2.0E+8	1.6E+7	<MDL	<MDL	<MDL	<MDL	<MDL	<MDL	<MDL	<MDL	<MDL	<MDL
2-Methylnapthalene	NA	57,000	ID	5.5E+6	ID	ID	ID	8.1E+6	<MDL	<MDL	<MDL	<MDL	<MDL	<MDL	<MDL	<MDL	<MDL	<MDL
Phenanthrene	NA	56,000	5,300	1.1E+6	2.8E+6	160,000	6.7E+6	1.6E+6	<MDL	<MDL	<MDL	**130,000**	<MDL	<MDL	**1,600**	<MDL	**540**	<MDL
Pyrene	NA	480,000	ID	480,000	1.0E+9 (D)	6.5E+8	6.7E+9	2.9E+7	<MDL	<MDL	<MDL	**180,000**	<MDL	<MDL	**1,300**	<MDL	**930**	<MDL

Notes:
1. All sample results in µg/kg (parts per billion)
2. Result **bolded** where detected, **bolded** and shaded where exceeding applicable cleanup criteria
3. <MDL = Less Than Method Detection Limit, NA = Not Applicable, NLL = Not Likely to Leach, NLV = Not Likely to Volatilize, ID = Insufficient Data to Develop Criterion
4. D = Calculated criterion exceeds 100 percent, hence it is reduced to 100 percent or 1.0E+9 parts per billion (ppb)
5. Cleanup Criteria from Michigan OP Memo RRD-1, Attachment 1, January 23, 2006

Table 1: Summary of Envirologic Soil Analytical Results & Comparison to Residential Cleanup Criteria (continued)

Metals																		
Compound	Statewide Default Background Levels	Residential Drinking Water Protection Criteria	Groundwater Surface Water Interface Protection Criteria	Groundwater Contact Protection Criteria	Soil Vol. to Indoor Air Inhalation Criteria	Infinite Source Volatile Soil Inhalation Criteria	Particulate Soil Inhalation Criteria	Residential Direct Contact Criteria	GSB-1 @ 0.5'	GSB-2 @ 0.5'	GSB-3 @ 0.5'	GSB-4 @ 0.5'	GSB-5 @ 0.5'	GSB-6 @ 0.5'	GSB-7 @ 0.5'	GSB-8 @ 0.5'	GSB-9 @ 0.5'	GSB-11 @ 0.5'
Aluminum	6.9E+6	1,000	NA	1.0E+9	NLV	NLV	ID	5.0E+7	**4,200,000**	**5,800,000**	**4,400,000**	**2,800,000**	**3,000,000**	**4,900,000**	**4,800,000**	**3,100,000**	**2,800,000**	**5,700,000**
Arsenic	5,800	4,600	70,000	2.0E+6	NLV	NLV	720,000	7,600	**6,000**	**7,800**	**7,100**	**13,000**	**3,700**	**640**	**6,200**	**120,000**	**11,000**	**9,000**
Barium	75,000	1.3E+6	G,X	1.0E+9	NLV	NLV	3.3E+8	3.7E+7	**42,000**	**56,000**	**52,000**	**72,000**	**41,000**	**60,000**	**28,000**	**250,000**	**32,000**	**100,000**
Cadmium	1,200	6,000	G,X	2.3E+8	NLV	NLV	1.7E+6	550,000	**93**	**99**	**150**	**640**	**110**	<MDL	**100**	**870**	**230**	**110**
Chromium	18,000	1.0E+9	G,X	1.0E+9	NLV	NLV	3.3E+8	7.9E+8	**10,000**	**9,300**	**7,200**	**22,000**	**5,800**	**7,700**	**12,000**	**4,800**	**6,900**	**8,000**
Copper	32,000	5.8E+6	G	1.0E+9	NLV	NLV	1.3E+8	2.0E+7	**9,900**	**11,000**	**9,700**	**25,000**	**8,000**	**8,900**	**13,000**	**18,000**	**16,000**	**8,700**
Lead (total)	21,000	700,000	G,X	ID	NLV	NLV	1.0E+8	400,000	**6,900**	**9,500**	**19,000**	**55,000**	**11,000**	**7,600**	**8,200**	**15,000**	**23,000**	**11,000**
Mercury	130	1,700	50	47,000	48,000	52,000	2.0E+7	160,000	<MDL	<MDL	<MDL	<MDL	<MDL	**66**	<MDL	**90**	<MDL	<MDL
Selenium	410	4,000	400	7.8E+7	NLV	NLV	1.3E+8	2.6E+6	<MDL	**320**	**290**	**280**	**280**	<MDL	**240**	**800**	<MDL	**280**
Silver	1,000	4,500	100	2.0E+8	NLV	NLV	6.7E+6	2.5E+6	<MDL	<MDL	<MDL	<MDL	<MDL	<MDL	<MDL	<MDL	<MDL	<MDL
Zinc	47,000	2.4E+6	G	1.0E+9	NLV	NLV	ID	1.7E+8	**21,000**	**24,000**	**26,000**	**140,000**	**30,000**	**18,000**	**35,000**	**62,000**	**65,000**	**42,000**

Notes:
1. All sample results in µg/kg (parts per billion)
2. Result **bolded** where detected, **bolded** and shaded where exceeding applicable cleanup criteria
3. <MDL = Less Than Method Detection Limit, NLV = Not Likely to Volatilize, ID = Insufficient Data to Develop Criterion
4. G = GSI criterion depends on the pH or water hardness, or both; X = GSI criterion not protective of surface water utilized as drinking source
5. Cleanup Criteria from Michigan OP Memo RRD-1, Attachment 1, January 23, 2006

Table 2: Summary of Envirologic Groundwater Analytical Results & Comparison to Residential Cleanup Criteria

Compound	Residential Drinking Water Criteria	Groundwater Surface Water Interface Criteria	Groundwater Volatilization to Indoor Air Inhalation Criteria	Groundwater Contact Criteria	GSB-3 @ 7-11'	GSB-7 @ 3-7'	GSB-10 @ 6-10'
Volatile Organic Compounds (VOCs)							
Tetrachloroethene	5.0	45	25,000	12,000	<MDL	<MDL	**1.7**
Trichloroethene	5.0	200	15,000	22,000	<MDL	<MDL	<MDL
Cis-1,2-dichloroethene	70	620	93,000	200,000	<MDL	**12**	<MDL
Vinyl Chloride	2.0	15	1,100	1,000	**2.3**	**2.8**	<MDL
All other VOCs	NA	NA	NA	NA	<MDL	<MDL	<MDL
Polynuclear Aromatic Hydrocarbons (PNAs)							
All PNAs	NA	NA	NA	NA	<MDL	<MDL	<MDL
Metals							
Arsenic	10	150	NLV	4,300	<MDL	**27**	<MDL
Barium	2,000	G,X	NLV	1.4E+7	**150**	**220**	<MDL
Cadmium	5.0 (A)	G,X	NLV	190,000	<MDL	<MDL	<MDL
Chromium	100 (A)	11	NLV	460,000	<MDL	<MDL	<MDL
Lead	4.0 (L)	G,X	NLV	ID	<MDL	<MDL	<MDL
Selenium	50	5.0	NLV	970,000	<MDL	<MDL	<MDL

Notes:
1. All sample results in µg/L (parts per billion)
2. Result **bolded** where detected, **bolded** and shaded where exceeding applicable cleanup criteria
3. <MDL = Less Than Method Detection Limit, NA = Not Applicable, NLV = Not Likely to Volatilize, ID = Insufficient Data to Develop Criterion
4. A = Criterion is the State of Michigan drinking water standard established pursuant to Section 5 of 1976 PA 399, MCL 325.1005; G = GSI criterion depends on the pH or water hardness, or both; L = Criteria for lead are derived using a biologically based model, as allowed for under Section 20120a(10) of the NREPA, X = GSI criterion not protective of surface water utilized as drinking source
5. Cleanup Criteria from Michigan OP Memo RRD-1, Attachment 1, January 23, 2006

Soil/Groundwater Analytical Results

No VOCs were identified above the method detection limit in the soil samples collected across the subject property. This is consistent with the field observations and lack of PID responses noted during sample collection. It should be noted that the method detection limit for vinyl chloride was elevated in the soil samples. The elevated reporting limits exceed the Residential Drinking Water Protection criterion. However, the elevated reporting limits do not exceed additional Residential Cleanup criteria.

The detection of VOCs in groundwater was limited to the volatile halocarbons tetrachloroethene, cis-1,2-dichloroethene, and vinyl chloride. Tetrachloroethene was detected below Residential Cleanup criteria near the northeast corner of the subject building (GSB-10). Cis-1,2-dichloroethene was detected below Residential Cleanup criteria southeast of the subject building (GSB-7). Vinyl chloride was identified in groundwater above the Residential Drinking Water criterion west (GSB-3) and southeast (GSB-7) of the subject building. The detection of volatile halocarbons in groundwater is consistent with the previously identified contaminant conditions on the subject property.

The detection of PNAs in soil was limited to three boring locations: GSB-4, GSB-7, and GSB-9. The concentrations of the select PNAs identified in borings GSB-7 and GSB-9 do not exceed Residential Cleanup criteria. The concentrations of select PNAs in boring GSB-4 exceed the Groundwater-Surface Water Interface Protection (GSIP) criteria and/or the Residential Direct Contact criteria. As indicated, boring GSB-4 was installed at an exterior location west of the subject building. No odors or staining of the soil were noted at this location during sample collection. The presence of PNAs in the soil sample at this location may be attributable to fill material encountered in shallow soils within the boring. No PNAs were identified in any of the groundwater samples collected on the subject property. The lack of detection of PNAs in groundwater down gradient of GSB-4 would appear to indicate that PNAs are not leaching from soil to groundwater.

Metals were identified in all soil samples collected across the subject property. With the exception of arsenic, chromium, lead and zinc at select locations, the reported concentrations of metals were below State Wide Default Background Levels. The reported concentrations of arsenic at the majority of the sample locations exceeded the Residential Drinking Water Protection and/or Residential Direct Contact criteria. The concentration of selenium in soil at location GSB-8 is in excess of the Groundwater-

Surface Water Interface Protection criterion. The concentrations of chromium and zinc in soil do not exceed Residential Cleanup criteria. The detection of metals in groundwater was limited to arsenic from boring GSB-7 and barium from borings GSB-3 and GSB-7. The reported concentration of arsenic from GSB-7 is in excess of the Residential Drinking Water criterion. The reported concentrations of barium in groundwater do not exceed Residential Drinking Water criteria.

The analytical results from the previously completed site characterization activities as well as the Envirologic Phase II ESA demonstrate that the subject property meets the definition of a "facility' as defined by Part 201 of NREPA. A summary of the "facility" contaminants and their respective CAS numbers is presented below.

Hazardous Substance	CAS Number
Tetrachloroethene	127184
Trichloroethene	79016
Cis-1,2-dichloroethene	156592
Vinyl Chloride	75014
Bromomethane	74839
Naphthalene	91203
Ethylbenzene	100414
1,2,4-trimethylbenzene	95636
1,3,5-trimethylbenzene	108678
Xylenes	1330207
Arsenic	7440382
Selenium	7782492

Abandoned Containers

A 5,000-gallon gasoline underground storage tank (UST) was removed from the subject property in April of 1987. No records of additional USTs in association with the subject property were on file with the MDEQ or the Kalamazoo Township Fire Department. No indications of the presence of additional underground storage tanks (vent pipes, fill ports, pumps) were observed during the Phase I ESA site inspections. Mr. John Dillworth of Goodwill reports no knowledge of additional USTs in association with the subject property. However, Kalamazoo Township Fire Chief Farr recalled that a heating oil UST may have been associated with the subject property, in addition to the identified gasoline UST. No specific record of an additional UST exists in the Township Fire Department

files; the concern regarding a potential additional tank was based solely upon the recollection of Chief Farr that such a tank may have historically been utilized.

In order to investigate the potential for an additional UST to remain on the subject property, Envirologic oversaw the completion of a ground-penetrating radar (GPR) geophysical survey of portions of the subject property. The GPR survey report is presented as Appendix H of the Phase I & II ESA. The survey included a 30-foot-wide area around the perimeter of the subject building, an 80-foot by 80-foot area in the northeast corner of the building, and a 100-foot by 100-foot area associated with a former solvent storage building on the south side of the subject property. Particular attention was focused on the northeast corner of the building based upon the historic use of a boiler room in the northeast corner of the structure. It has been presumed that the potential presence of a heating oil UST is most likely in close proximity to the former boiler room. No indications of the presence of additional UST system structures were identified as a result of the GPR survey.

Based upon available documentation and the completed GPR survey, no abandoned or discarded containers are associated with the subject property.

Contaminant Fate and Transport

Previously completed hydrogeologic investigation activities conducted by Fleis & Vandenbrink indicate a southeasterly groundwater flow direction on the subject property. Based upon the analytical results from groundwater samples collected along the southern property boundary, volatile halocarbons are emanating from the subject property to the adjacent parcel to the south. Specifically, tetrachloroethene, trichloroethene, cis-1,2-dichloroethene, and vinyl chloride have been identified in groundwater along the southern boundary of the subject property at concentrations in excess of the Residential Drinking Water and/or GSI criteria. Additional groundwater sampling conducted by Fleis & Vandenbrink on the parcel to the south indicates the presence of tetrachloroethene and vinyl chloride in excess of Residential Drinking Water and/or GSI criteria.

Based upon the groundwater analytical data, a Notice of Migration of Contamination has been completed for the adjacent parcel to the south on behalf of Brown Family Holdings, LLC. The Notice of Migration of Contamination is presented as Appendix B.

Exposure Pathways

As indicated, the subject property is zoned I - Industrial. However, based upon the fact that commercial/office activities will take place within the office space in the western portion of the building, maximum contaminant concentrations have been compared to Commercial IV Cleanup criteria. It should be noted that the contaminant delineat efforts demonstrate that the extent of soil impact beneath the building is limited to areas proximal to the former dry cleaning operations. The extent of soil impact beneath the building does not extend to western portions of the structure that will be utilized for Commercial IV related activities. The future use of the areas of within the delineated extent of soil impact beneath the building will be limited to industrial machining operations for Beckan. An analysis of the applicability of exposure pathways is provided below. Based upon the completed municipal water connection, there will be no exposure to contaminants through the ingestion of on-site groundwater. Thus, the drinking water exposure pathway was not considered complete for the property.

Based upon the fact that "facility" contaminants were detected in soil and groundwater, the following exposure pathways were considered:

- Direct contact with contaminants in soil
- Inhalation of contaminated soil particulates
- Soil Volatilization to Indoor Air Inhalation
- Infinite Source Volatile Soil Inhalation
- Groundwater Volatilization to Indoor Air
- Direct Contact with contaminants in groundwater

Table 3 below provides a comparison of the maximum "facility" soil contaminant concentrations to the relevant Commercial IV criteria. Table 4 provides a comparison of the maximum "facility" groundwater contaminant concentrations to relevant Commercial IV criteria. In order to more thoroughly evaluate the potential for unacceptable health exposures, all compounds identified as "facility" contaminants in the previously completed site characterization activities have been included in Tables 3 and 4.

Table 3: Comparison of Maximum "Facility" Soil Contaminant Concentrations to Relevant Commercial IV Cleanup Criteria

Compound	Maximum Contaminant Level	Boring Location and Depth	Direct Contact Criteria	Soil Volatilization to Indoor Air Inhalation	Infinite Source Volatile Soil Inhalation	Particulate Soil Inhalation Criteria
Tetrachloroethene	690,000	BH-20 @ 3.5 ft.	**88,000**	**60,000**	**600,000**	6.8E+9
Trichloroethene	6,700	BH-21 @ 3.5 ft.	500,000	37,000	260,000	2.3E+9
Bromomethane	1,300	BH-23 @ 6-7 ft.	1.2E+6	1,600	13,000	1.5E+8
Naphthalene	2,400	SB-3 @ 5 ft.	6.1E+7	470,000	350,000	8.8E+7
Ethylbenzene	1,200	SB-3 @ 5 ft.	140,000	140,000	2.4E+6	1.3E+10
1,2,4-trimethylbenzene	23,000	SB-3 @ 5 ft.	110,000	110,000	2.5E+7	3.6E+10
1,3,5-trimethylbenzene	4,800	SB-3 @ 5 ft.	94,000	94,000	1.9E+7	3.6E+10
Xylenes	8,500	SB-3 @ 5 ft.	150,000	150,000	5.4E+7	1.3E+10
Arsenic	120,000	GSB-8 @ 0.5 ft.	**41,000**	NLV	NLV	910,000
selenium	800	GSB-8 @ 0.5 ft.	1.0E+7	NLV	NLV	5.9E+7

Notes:
1. All sample results in μg/kg (parts per billion)
2. NLV = Not Likely to Volatilize
3. Cleanup Criteria from Rule 299.5746 of Part 201, January 23, 2006

Table 4: Comparison of Maximum "Facility" Groundwater Contaminant Concentrations to Relevant Commercial IV Cleanup Criteria

Compound	Maximum Contaminant Level	Boring Location and Depth	Groundwater Contact Criteria	Groundwater Volatilization to Indoor Air Inhalation
Tetrachloroethene	400	MW-6 @ 10.5 ft.	12,000	170,000
Trichloroethene	58	TMW-18 @ 19 ft.	22,000	97,000
Cis-1,2-dichloroethene	55	MW-8 @ 6.75 ft.	200,000	210,000
Vinyl Chloride	37	MW-8 @ 6.75 ft.	1,000	13,000
Arsenic	27	GSB-7 @ 3-7 ft.	4,300	NLV

Notes:
1. All sample results in μg/L (parts per billion)
2. NLV = Not Likely to Volatilize
3. Cleanup Criteria from Rule 299.5746 of Part 201, January 23, 2006

A review of Table 4 indicates that no unacceptable health exposures exist relative to the identified groundwater contaminant conditions based upon the fact that groundwater is not and will not be utilized as a potable water supply. As indicated, it is anticipated that a

deed restriction will be placed on the property prohibiting the development of groundwater as a potable water supply in support of MDEQ "closure" for the identified contaminant conditions.

The maximum concentration of tetrachloroethene identified in soil beneath the building exceeds the Commercial IV Soil Volatilization to Indoor Air Inhalation criterion. Beyond the BH-20 location detailed in the Table 3 above, two additional sample locations beneath the building also identified tetrachloroethene in excess of the Commercial IV Soil Volatilization to Indoor Air Inhalation criterion (BH-4, BH-8). Exceedance of the Soil Volatilization to Indoor Air Inhalation criterion indicates a potential for unacceptable health exposures relative to occupancy of the building.

Based upon the potential for unacceptable health exposures relative to occupancy of the building; DeLisle collected three ambient air samples for volatile halocarbons analysis from within the building on November 10, 2008. The sampling activities and results are presented in a report prepared by DeLisle in November of 2008. The following sample locations were selected by DeLisle: the office/administrative area within the western portion of the building, an area of the warehouse to be occupied by Beckan Industries, Inc. in the future, and from within the former dry cleaning room. No recordable levels of contaminants of concern were identified in the three samples. The limited air sampling results indicated that no unacceptable health exposures relative to building occupancy were identified at that time. However, MDEQ guidance indicates that a one time sampling event is not sufficient to determine that the potential for unacceptable health exposures relative to occupancy of the building does not exist.

In order to further evaluate the potential for unacceptable health exposures associated with occupancy of the building; Envirologic conducted sub-slab soil gas sampling beneath the structure. The sub-slab sample point installation and soil gas sample collection was completed utilizing MDEQ RRD Operational Memorandum No. 4 – Attachment 4 guidance. A total of 18 sample points were installed within interior portions of the building. The sample locations were selected based upon the previously generated analytical results for soil samples collected beneath the subject building. The sub-slab sample points were generally focused around two areas on the south side of the building historically utilized for dry cleaning operations. Additional sub-slab sample points were installed beyond the former dry cleaning areas in order to further characterize sub-slab soil gas conditions. Refer to Figure 3, Appendix A for a site plan detailing

sample locations. The sub-slab soil gas sampling results are presented in Table 5 along with a comparison to Residential and Industrial Acceptable Soil Gas Screening Concentrations (ASGSCs). At this time, there is no MDEQ guidance associated with Commercial Acceptable Soil Gas Screening Concentrations.

Table 5: Summary of Sub-Slab Analytical Results & Comparison to Acceptable Residential & Industrial Soil Gas Screening Concentrations

Compound	Sub-Slab Residential Acceptable Soil-Gas Screening Concentration	Sub-Slab Industrial Acceptable Soil-Gas Screening Concentration	SUB-1	SUB-2	SUB-3	SUB-4	SUB-5	SUB-6	SUB-7	SUB-8	SUB-9	SUB-10	SUB-11	SUB-12	SUB-13	SUB-14	SUB-15	SUB-16	SUB-17	SUB-18
Tetrachloroethene	310	1,300	**3,200**	**17,000**	**8,200**	**1,600**	**220**	<MDL	<MDL	**11**	**75**	**510**	**4,000**	**75**	**92**	**82**	**320**	<MDL	**25**	<MDL
Trichloroethene	130	540	<MDL	**160**	<MDL	**30**	<MDL	<MDL	<MDL	<MDL	<MDL	<MDL	<MDL	<MDL	<MDL	<MDL	<MDL	<MDL	<MDL	<MDL
Cis-1,2-dichloroethene	450	640	<MDL	<MDL	<MDL	<MDL	<MDL	<MDL	<MDL	<MDL	<MDL	<MDL	<MDL	<MDL	<MDL	<MDL	<MDL	<MDL	<MDL	<MDL
Vinyl Chloride	110	450	<MDL	<MDL	<MDL	<MDL	<MDL	<MDL	<MDL	<MDL	<MDL	<MDL	<MDL	<MDL	<MDL	<MDL	<MDL	<MDL	<MDL	<MDL
All Other VOCs	NA	NA	<MDL	<MDL	<MDL	<MDL	<MDL	<MDL	<MDL	<MDL	<MDL	<MDL	<MDL	<MDL	<MDL	<MDL	<MDL	<MDL	<MDL	<MDL

Notes:
1. All sample results in ppbv (parts per billion by volume)
2. Result **bolded** where detected, **bolded** and shaded where exceeding Residential and/or Industrial Screening Concentrations
3. Acceptable Soil Gas Screening Concentrations (ASGSCs) from MDEQ Op. Memo. No. 4, Appendix B

Tetrachloroethene was identified above the method detection limit in the majority of the samples. The concentration of tetrachloroethene at five sample locations exceeds the Sub-Slab Industrial Acceptable Soil Gas Screening Concentration (ASGSC). Exceedances of the Industrial ASGSC are focused around the perimeter of the eastern most former dry cleaning room (SUB-1 through SUB-4) and one sample point between the two former dry cleaning areas (SUB-11). The concentration of tetrachloroethene detected at sample location SUB-15 exceeds the Residential ASGSC but not the Industrial ASGSC. Trichloroethene was identified at two sample locations (SUB-2 and SUB-4). The reported concentration of trichloroethene at location SUB-2 exceeds the Residential ASGSC. No additional VOCs were identified above the method detection limit in the sub-slab soil gas samples.

DeLisle has completed installation of a Soil Vapor Extraction (SVE) system within the subject building in order to address the contaminant conditions identified beneath the building. The system consists of four (4) two-inch diameter wells with a five-foot screened interval located in southern portions of the building. The system is set up to run each extraction well at 25 SCFM each for a total air flow rate of 100 SCFM. A site plan detailing the SVE system lay-out along with additional detail on system performance is presented in Appendix A. Ongoing operation of the SVE system is intended to achieve two goals: reduction in soil contaminant concentrations through the carbon treatment of soil gas vapors and; creation of a negative pressure environment beneath the building within areas of identified impact. Maintenance of negative pressure beneath appropriate portions of the building will preclude the potential for unacceptable health exposures associated with occupancy of the structure relative to the volatilization of contaminants to indoor air.

It is the understanding of Envirologic that completion and ongoing operation of an appropriate SVE system represents an acceptable remedy to address the identified contaminant conditions beneath the building. Specifically, it is the understanding of Envirologic that ongoing operation of an SVE system with a radius of influence encompassing all areas of identified soil contamination in excess of the Volatilization to Indoor Air Inhalation criteria would satisfy “due care” obligations for Brown Family Holdings, LLC and Beckan Industries, Inc. as future owner/operator of the subject property. In order to evaluate the radius of influence for the SVE system, Envirologic obtained negative pressure readings (inches of water) utilizing a Magnehelic negative

pressure gauge from each of the sub-slab soil gas sample points. A summary of the negative pressure readings obtained on April 2nd, 2009 is provided in Table 6 below.

Table 6: Summary of Negative Pressure Readings for Sub-Slab Soil Gas Vapor Sample Points

Location	SUB-1	SUB-2	SUB-3	SUB-4	SUB-5	SUB-6	SUB-7	SUB-8	SUB-9	SUB-10	SUB-11	SUB-12	SUB-13	SUB-14	SUB-15	SUB-16	SUB-17	SUB-18
Negative Pressure (Inches of Water) (4/2/09)	0.15	0.02	0.04	0.04	0.02	0.0	0.0	0.0	0.05	0.06	0.32	0.0	0.12	0.0	0.0	0.0	0.0	0.0

As detailed in Table 6, a negative pressure reading was obtained from each sample point for which an exceedance of the Industrial ASGSC was identified. The negative pressure readings indicate that operation of the SVE system precludes the potential for unacceptable health exposures relative to occupancy of the building.

In order to further characterize site conditions and to ensure that no unacceptable health exposures will occur as a result of occupancy of the building, DeLisle completed soil contamination delineation activities beneath the building in May of 2009. The scope of the contaminant delineation was determined by DeLisle based upon correspondence with the MDEQ. The results of the characterization efforts are detailed in the *Additional Investigation* document submitted to the MDEQ in June of 2009 and presented as Appendix C. The document demonstrates that the extent of soil impact beneath the building in excess of the Volatilization to Indoor Air Inhalation criteria has been delineated. As part of the additional investigation, seven of the soil borings were completed with soil gas wells (SGW). The soil gas wells were installed to provide for soil gas sampling at the five- (5-) foot interval below grade and also to provide measuring points for SVE vacuum influence. The DeLisle results demonstrate a negative pressure reading beneath the building within all areas where the Volatilization to Indoor Air Inhalation criteria were exceeded. A figure prepared by DeLisle depicting the negative pressure readings as well as the radius of influence around each of the four extraction wells is presented in Appendix A. Based upon a review of the *Additional Investigation* document, Mr. Mark DuCharme of the MDEQ provided an email response to DeLisle concurring that the extent of soil impact beneath the building in excess of the Volatilization to Indoor Air Inhalation criteria has been delineated. Additionally, Mr. DuCharme concurred that the radius of influence for the SVE system was sufficient to cover all areas of identified Soil Volatilization to Indoor Air Inhalation exceedances.

The results of the Additional Investigation and associated MDEQ response demonstrate that ongoing operation of the SVE system represents an appropriate presumptive remedy to ensure that no unacceptable health exposures will occur in association with occupancy of the building relative to the volatilization of contaminants from beneath the building to indoor air.

The potential for fire and explosion hazards associated with the contamination does not exist at the site.

Based upon the fact that the subject property meets the definition of a "facility" as defined by Part 201 of NREPA, appropriate soil management practices will have to be utilized on site. Any excess soils potentially generated during future site development activities will have to remain on the subject property or be characterized and properly disposed in an appropriate manner. Soils should not be relocated to another portion of the subject property without first being characterized to ensure that contaminated soils are not relocated to clean portions of the site.

PLAN FOR RESPONSE ACTIVITY

The following response activity will be undertaken to ensure that no unacceptable health exposures occur relative to the identified contaminant conditions.

- Groundwater will not be developed as a potable water supply. The subject property is currently serviced with municipal water through the City of Kalamazoo. In support of MDEQ "closure" for the identified contaminant conditions, it is the understanding of Envirologic that a deed restriction will be placed on the subject property prohibiting the development of groundwater as a potable water supply. The placement of such a restriction will preclude the potential for unacceptable health exposures relative to the identified groundwater contaminant conditions.
- The completed contaminant delineation and Soil Vapor Extraction (SVE) system evaluations demonstrate that no unacceptable health exposures will occur in the future in association with occupancy of the building relative to the volatilization of contaminants to indoor air. Continued ongoing future operation and maintenance of the SVE System represents an appropriate presumptive remedy and will be necessary in order to ensure that no unacceptable health exposures occur relative to occupancy of the building. Mylar film damper/backflow preventer is installed at the top of each of air vent casings. As a result, vapor contaminants emissions into the building will not occur when the SVE system is down for carbon change-out, power outages, or routine maintenance/repairs. Further, the one-time ambient air results for three samples collected within the building prior to installation of the SVE system did not identify unacceptable contaminant concentrations in ambient air.
- Ongoing operation of the SVE system will serve to reduce the concentrations of volatile contaminants identified beneath the building.
- A Notice of Migration of Contamination has been completed for the adjacent parcel south of the subject property.
- The contaminant conditions will be communicated to personnel who may be on site during future site development activities (i.e., utility workers, landscaping and construction personnel).
- It is not anticipated that any excess soil will be generated from potential redevelopment activities. Any excess soil generated during redevelopment activities must either be used on the parcel or disposed in an appropriate manner.

EVALUATION AND DEMONSTRATION OF COMPLIANCE WITH SECTION 7A OBLIGATIONS

Exacerbation

The intended future use of the property is not anticipated to exacerbate the existing conditions at the facility for the following reasons.

- There are no plans to remove impervious cover currently in place over identified contaminant areas.
- Soils from areas of impact on the subject property will not be relocated to clean portions of the site without first being appropriately characterized to ensure that contaminant conditions are not exacerbated.
- Proposed future site redevelopment activities will not result in influencing groundwater flow rate or direction. Thus, through site development there will not be an increase in migration of contaminants off site.
- Beyond soil contaminant reduction through ongoing operation of the SVE system, it is not likely that active remediation will be pursued by a potentially responsible party that may involve source removal of the contamination. The future use of the site does not interfere with reasonable approaches to Corrective Action, or increased response costs associated with such measures if, at some time in the future, Corrective Action measures are completed.

Due Care

As discussed in detail above, the completed contaminant delineation and SVE system performance efforts demonstrate that no unacceptable health exposures will occur in the future in association with occupancy of the building. The negative pressure gradient created beneath the building as a result of operation of the SVE system will serve as a presumptive remedy to preclude the potential for contaminants beneath the building to volatilize and impact indoor air within the structure. The presence of the damper/back flow preventer on SVE air vent casings will ensure no unacceptable vapor emissions into the building during periods of down time for the SVE system.

Site personnel will be made aware of the contaminant conditions in order to ensure that appropriate soil management practices are followed.

Copies of this Section 7a Compliance Analysis will be provided to subsequent owners or operators of the site.

Reasonable Precautions

If specific site development plans are generated in the future, a health and safety plan will be provided and used. Potential development personnel will be made aware of the special needs relating to the management of soil generated during construction. The shed containing the SVE system is locked and secured prevent access from the public. Thus, there are no reasonably foreseeable acts or omissions of third parties that would exacerbate site conditions or create unacceptable exposures.

Continuing Obligations

To comply with the Bona Fide Prospective Purchaser exemption to liability provided in the Superfund amendments of 2002, the owner must adhere to the following obligations:

	Applicable	Not Applicable	Comment
Comply with any land use restrictions	X		Anticipated restriction prohibiting the development of groundwater as a potable water supply.
Do not impede the effectiveness of any institutional control placed on the property	X		As applicable, impervious cover will be maintained over areas of identified soil impact. Groundwater will not be developed.
Take reasonable steps to stop continuing releases		X	Gasoline UST has been removed from the site. The former septic system has been abandoned. Operation of the SVE system will reduce contaminant concentrations.
Take reasonable steps to prevent future releases	X		Appropriate engineering controls will be utilized in association with future chemical use.
Take reasonable steps to prevent exposure	X		Groundwater will not be developed as a potable water supply. The SVE will continue to operate in the future and serve as a presumptive remedy.
Provide full cooperation, assistance and access to the site for cleanup activities	X		Access to the property will be provided to liable parties in order to conduct appropriate release response activities.
Comply with information requests	X		Provide copies of BEA and Due Care Plan upon request
Provide any legally required notices	X		Notice of Migration completed for adjacent parcel to the south.

REFERENCES

Instructions for Preparing and Disclosing Baseline Environmental Assessments and Section 7a Compliance Analyses, March 11, 1999, Michigan Department of Environmental Quality.

Parts 9 and 10 of the Administrative Rules developed under Part 201.

Revised Part 201 Cleanup Criteria Tables, Operational Memorandum 18, December 21, 2002, Michigan Department of Environmental Quality, Environmental Response Division.

Phase I & II Environmental Site Assessment, Goodwill Industries of SW Michigan, Inc., 2700 N. Pitcher St., Kalamazoo Township, Michigan, Envirologic Technologies, Inc., June 9, 2009.

Baseline Environmental Assessment, Goodwill Industries of SW Michigan, Inc., 2700 N. Pitcher St., Kalamazoo Township, Michigan, Envirologic Technologies, Inc., June 9, 2009.

APPENDIX A

FIGURES

Figure 1: Site Location Map
Figure 2: Site Plan
Figure 3: Site Plan with Envirologic Sampling Locations
DeLisle Figure 2: Sampling Locations
DeLisle Figure 6: SVE System Well Piping Layout
DeLisle Site Map-1: Soil Sampling and Soil Gas Well (SGW) Locations
DeLisle Site Map-2: Vapor Extraction Radius of Influence

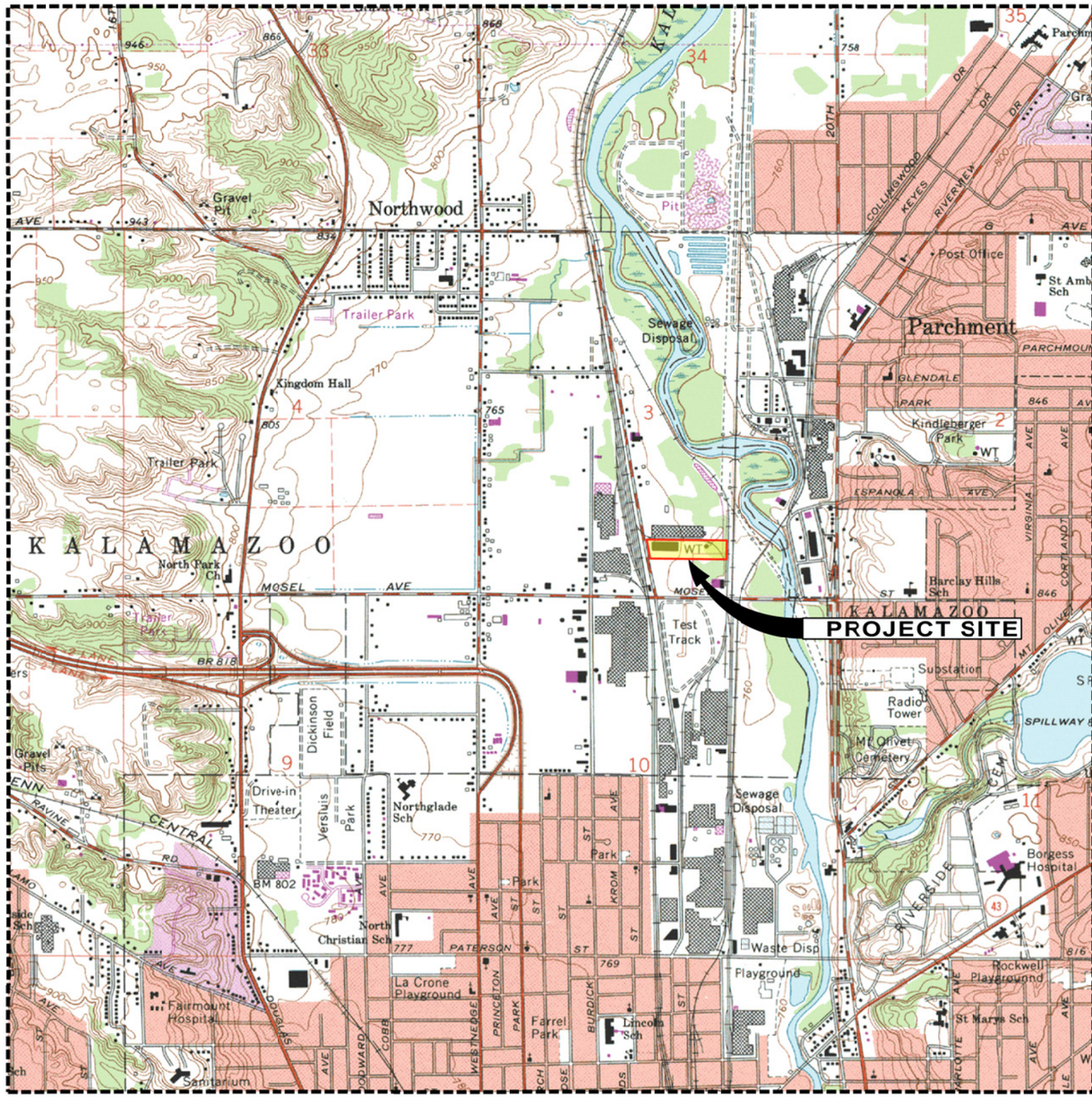

SOURCE: CONSTANTINE, MICHIGAN USGS 7.5 MINUTE TCPOGRAPHIC QUADRANGLE MAPS
MAPTECH1© U.S. TERRAIN SERIES™ ®MAPTECH©, INC. 606-433-8500

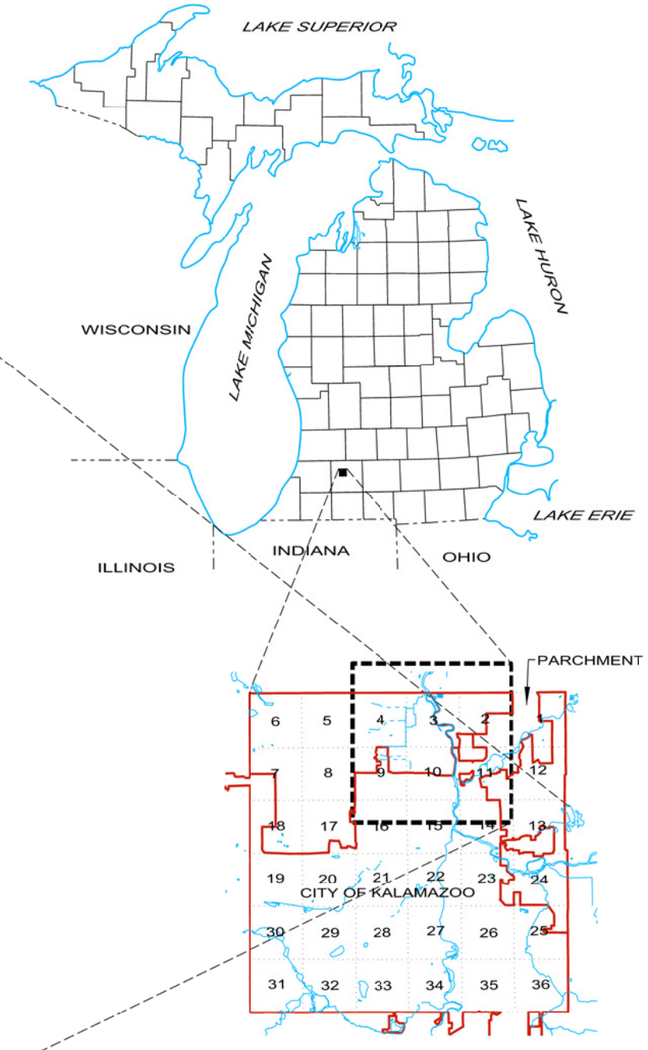

T 2 S. R. 11 W.
KALAMAZOO TOWNSHIP
KALAMAZOO COUNTY, MICHIGAN

N
W E
S

0 500 1000 2000 4000
SCALE 1" = 2000'

FORMER GOODWILL INDUSTRIES OF SOUTHWEST MICHIGAN

2700 NORTH PITCHER STREET
KALAMAZOO, MICHIGAN 49009

LOCATION MAP

ENVIROLOGIC TECHNOLOGIES, INC.
2960 INTERSTATE PARKWAY
KALAMAZOO, MICHIGAN 49048
PH: (269) 342-1100 FAX: (269) 342-4945

PROJECT NO. 080503
FIGURE NO: 1

KZOOCO 080503_080503_Site_Plan.dgn, Location Map

NOTE:
THIS IS NOT A PROPERTY BOUNDARY SURVEY, PROPERTY BOUNDARIES SHOWN ON THIS MAP ARE BASED ON AVAILABLE FURNISHED INFORMATION. BOUNDARIES SHOWN ARE APPROXIMATE ONLY AND SHOULD NOT BE USED TO ESTABLISH PROPERTY BOUNDARY LOCATION IN THE FIELD.

NOTE: AERIAL PHOTOGRAPHY: 2007 COLOR ORTHOPHOTO, OBTAINED FROM THE CITY OF KALAMAZOO ON LINE GIS VIEWER.

N
W E
S

SCALE 1" = 100'
0 50 100 200

FORMER GOODWILL INDUSTRIES OF SOUTHWEST MICHIGAN

2700 NORTH PITCHER STREET
KALAMAZOO, MICHIGAN 49004

SITE PLAN

ENVIROLOGIC TECHNOLOGIES, INC.
2960 INTERSTATE PARKWAY
KALAMAZOO, MICHIGAN 49048
PH: (269) 342-1100 FAX: (269) 342-4945

PROJECT NO. 080503

FIGURE No. 2

KZOOCO 080503_Site_Plan.dgn, Site Plan A

LEGEND

- GEOPROBE® SOIL BORING LOCATIONS
- SUB-SLAB VAPOR SAMPLE LOCATIONS

NOTE: INTERNAL BUILDING LAYOUT TAKEN FROM FURNISHED BUILDING PLAN.

N
W E
S

SCALE 1" = 50'
0 10 20 30 40 50 100

NOTE: AERIAL PHOTOGRAPHY: 2007 COLOR ORTHOPHOTO, OBTAINED FROM THE CITY OF KALAMAZOO ON LINE GIS VIEWER.

NOTE:
THIS IS NOT A PROPERTY BOUNDARY SURVEY, PROPERTY BOUNDARIES SHOWN ON THIS MAP ARE BASED ON AVAILABLE FURNISHED INFORMATION. BOUNDARIES SHOWN ARE APPROXIMATE ONLY AND SHOULD NOT BE USED TO ESTABLISH PROPERTY BOUNDARY LOCATION IN THE FIELD.

FORMER GOODWILL INDUSTRIES OF SOUTHWEST MICHIGAN

2700 NORTH PITCHER STREET
KALAMAZOO, MICHIGAN 49004

SAMPLING LOCATIONS

ENVIROLOGIC TECHNOLOGIES, INC.
2960 INTERSTATE PARKWAY
KALAMAZOO, MICHIGAN 49048
PH: (269) 342-1100 FAX: (269) 342-4945

PROJECT NO. 080503

FIGURE No. 3

KZOOCO 080503_080503_Site_Plan.dgn, Site Plan B

DeLisle Associates LTD

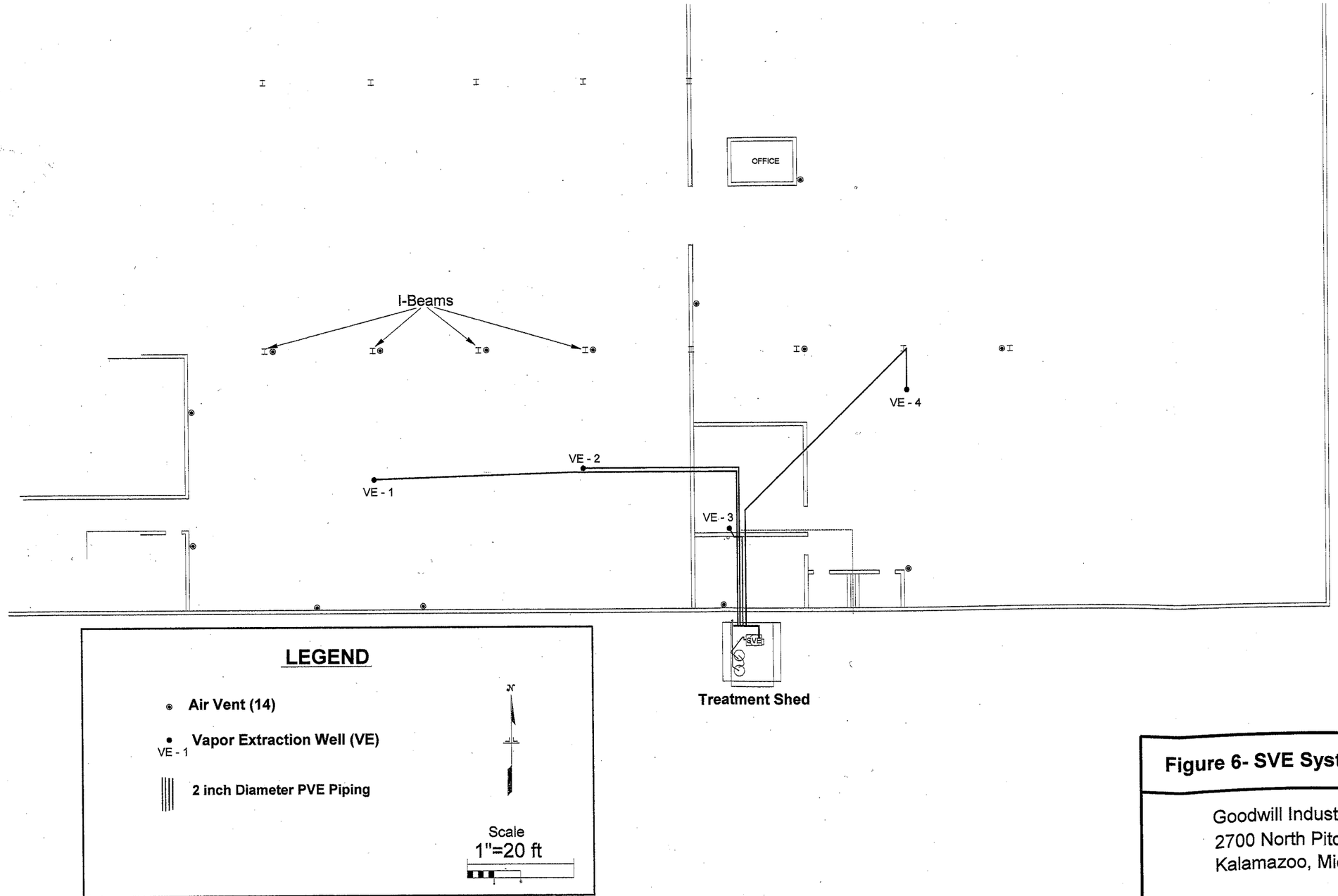

Figure 6- SVE System Well Piping Layout

Goodwill Industries of SW Michigan
2700 North Pitcher Street
Kalamazoo, Michigan

March 2009

DeLisle Associates LTD

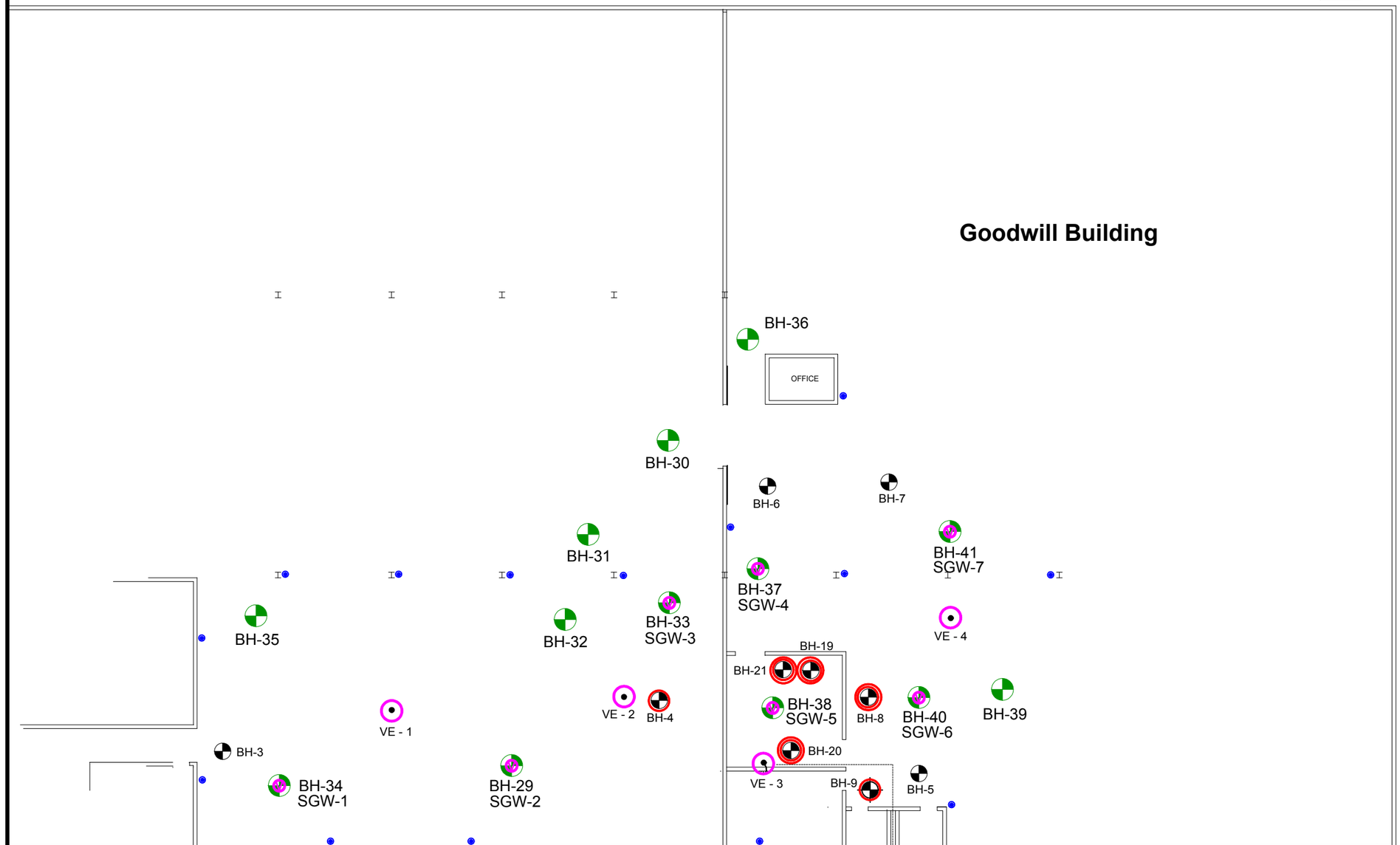

LEGEND

BH-35 Soil Borings BH-29 to BH-41 Conducted in May 2009

BH-29 SGW-2 Soil Boring with Soil Gas Well installed.

VE - 1 Soil Vapor Extraction Well

Air Vent (14)

Vacuum at 25 cfm per VE well (100 cfm SVE system total)

Soil sample with PCE and TCE exceeding Indoor Air Criteria

Soil sample with PCE exceeding Indoor Air Criteria

N

Scale 1"=20 ft

5 10

SITE MAP -1

Soil Sampling and Soil Gas Well (SGW) Locations

Goodwill Industries of SW Michigan
2700 North Pitcher Street
Kalamazoo, Michigan

May 18, 2009

DeLisle Associates LTD

Property Line

BH-2
MW-5

Goodwill Industries

Concrete Ramp

BH-11
BH-17
MW-2
BH-12
Bare ground
BH-10

Loading Dock Area

Asphalt

Concrete Dock

Property Line

BH-6
BH-7

BH-21
BH-4
BH-19
BH-8
Dry Cleaning Room
BH-9 MW-6
BH-20
BH-3
BH-5
Former Floor Drain

BH-13

BH-25

Sanitary Line
BH-24

BH-14

BH-26

BH-23
BH-22
BH-27

BH-16

BH-1

MW-9

Property Line

BH-28
MW-7
BH-18
BH-15
MW-8

LEGEND

N

Groundwater Monitoring Well (MW)

Bore Hole (BH)
Soil and/or groundwater sample

Burried Utility

Scale
1" = 40 ft

Figure 2 - Sampling Locations

Goodwill Industries of SW Michigan
2700 North Pitcher Street
Kalamazoo, Michigan

Date:	Job No.
October/November/December 2008 January/February 2009	EN08-044

DeLisle Associates LTD

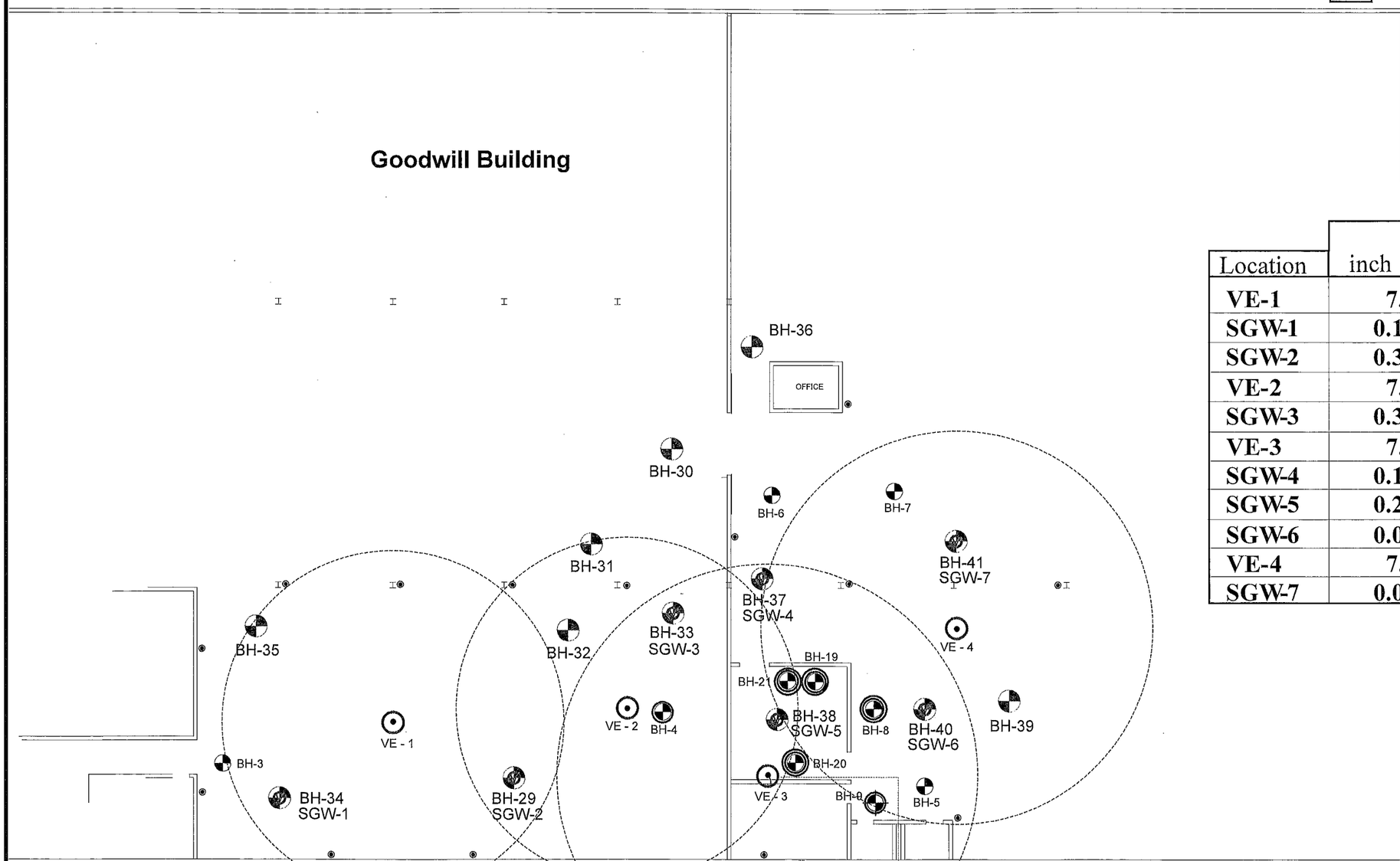

Location	Vacuum inch H_2O	Vacuum CFM
VE-1	7.0	~20-25
SGW-1	0.135	---
SGW-2	0.330	---
VE-2	7.0	~20-25
SGW-3	0.330	---
VE-3	7.0	~20-25
SGW-4	0.145	---
SGW-5	0.235	---
SGW-6	0.030	---
VE-4	7.1	~20-25
SGW-7	0.055	---

LEGEND

- BH-35 — Soil Borings BH-29 to BH-41 Conducted in May 2009
- BH-29 SGW-2 — Soil Boring with Soil Gas Well installed.
- VE - 1 — Soil Vapor Extraction Well
- Air Vent (14)
- Soil sample with PCE and TCE exceeding Indoor Air Criteria
- Soil sample with PCE exceeding Indoor Air Criteria
- Vapor Extraction Well Minimum Radius of Influence

N

Scale 1"=20 ft

5 10

SITE MAP -2

Vapor Extraction Radius of Influence

Goodwill Industries of SW Michigan
2700 North Pitcher Street
Kalamazoo, Michigan

May 29, 2009

APPENDIX B

NOTICE OF MIGRATION OF CONTAMINATION

June 10, 2009

Gratz Investments, LLC
15735 Littlefield Lane
Grand Haven, MI 49456

RE: Notice of Migration of Contamination, Goodwill Industries of SW Michigan, Inc., 2700 N. Pitcher St., Kalamazoo, Michigan

Dear Gratz Investments, LLC

Attached, please find the *Notice of Migration of Contamination* for the above-referenced property. The notice is being provided to you on behalf of Brown Family Holdings, LLC as the prospective new owner of the above-referenced site.

The notice is provided pursuant to the requirements of Part 201 of the Michigan Natural Resource and Environmental Protection Act, 1994 PA 451 as amended; specifically Rule 299.51017 of the Part 10 Rules. Rule 299.51017 requires that an owner or operator of a facility notify the MDEQ and affected property owners if they have reason to believe that contamination is likely to be emanating from the property and migrating beyond the boundaries of the property that he or she owns. As you are presumably aware, hydrogeologic investigation activities conducted by Goodwill in September of 2007 indicate the presence of volatile halocarbons in groundwater on the Goodwill site as well as the adjacent parcel to the south. This Notice is being provided to you as a result of the proposed transaction.

Brown Family Holdings, LLC is a new owner of the site. Brown Family Holdings, LLC is not liable for the existing contamination. Our contact with Brown Family Holdings, LLC is Mr. Shawn Brown, 860 Gibson, Kalamazoo, MI 49001

If you have any questions, please do not hesitate to contact our office at (269) 342-1100.

Sincerely,

ENVIROLOGIC TECHNOLOGIES, INC

Erik D. Peterson
Project Manager

David A. Stegink
Associate Vice President

Attachment

H:\Projects_K\KzooCo\Brownfield Redevelopment Authority\Former Goodwill\NoticeofMigrationCoverLetter.doc

For DEQ Use Only
ITS # _____
Site ID #_____
Category Code: _____

MICHIGAN DEPARTMENT OF ENVIRONMENTAL QUALITY
REMEDIATION AND REDEVELOPMENT DIVISION

NOTICE OF MIGRATION OF CONTAMINATION

(Under the authority of Part 201, Natural Resources and Environmental Protection Act, 1994 Act 451, as amended, (NREPA) and the Rules promulgated thereunder)

An owner or operator of property that is a facility, and/or who is subject to MCL 324.20114, and who has reason to believe that a hazardous substance is emanating from, has emanated from, or is likely to be emanating from the property and migrating beyond the boundaries of the property that he or she owns or operates is required under R 299.5522 and R 299.51017(1) to notify the Michigan Department of Environmental Quality ("DEQ") and affected property owners, unless he or she is exempt from MCL 324.20107a (see MCL 324.20107a(4) for exemptions), or unless he or she has provided the notice required by MCL 324.21309a. Submission of this notice does not fulfill the notification requirements of MCL324.21309a.

The notice must be provided within 45 days after the owner or operator has reason to believe that hazardous substances have migrated, or are likely to have migrated, to or beyond the boundary of his or her property (see R 299.51017 and R 299.5522 for exceptions). If a person is required to provide additional notice as a result of the changes in R 299.51017 that took effect on December 21, 2002, then that additional notice shall be provided not later than September 21, 2003.

Use of this form is mandatory for the notice required by R 299.51017(1) and may also be used by parties subject to MCL 324.20114 to provide notice required by R 299.5522. This form may also be used to provide notice to affected property owners as required by those rules.

If a person holds a permit for an oil and gas well under Part 615, Supervisor of Wells, of the NREPA and there is a release from the oil and gas exploration or production activities, that person shall give notice to the DEQ and to the owner of the surface rights of the property.

If a person holds an easement and there is a release from the easement holder's activities, that person shall provide notice to the DEQ and to the grantor of the easement, or the grantor's successor in interest, if any.

Completing this notice in no way relieves a person who is subject to MCL 324.20114 from the responsibility to undertake required response activities.

This notice must be sent to the DEQ office that serves the county in which the property is located. A list of DEQ offices is available at www.michigan.gov/bea, or by calling the Remediation and Redevelopment's Lansing office at 517-373-9837. The DEQ will not prepare acknowledgement of receipt of these notices. The sender is responsible for sending the report using a method that provides proof of delivery if such proof is desired. Please label the outside of the envelope "Migration Notice." Additional guidelines for the compliance with the requirements of R 200.51017(1) or R 299.5522 are available at www.michigan.gov/bea.

THIS NOTICE IS PROVIDED PURSUANT TO: **R 299.5522** ☐ **R 299.51017** ☒
(check both, if applicable)

Please provide the following information as completely as possible.

1. Name and location of the property that hazardous substances are emanating from:

   Name: Former Goodwill Industries of SW Michigan
   Address: 2700 N. Pitcher St.
   Location: Kalamazoo Township
   City/County: Kalamazoo County
   Property Tax Identification Number, or if applicable, the ward and item number: 06-03-460-010

2. Status relative to the property:
   (Check one or both, as applicable.)

   Owner ☒
   Operator ☐

Provide any additional ID numbers associated with the property (e.g., EPA ID No., BEA No., Part 213 facility ID No., etc.): Part 213 ID # 00003454

3. Name, address, and telephone number of the property owner, operator, or other party submitting the notice:
   Name: Brown Family Holdings, LLC
   Address: 860 Gibson
   City/State: Kalamazoo/Michigan
   Telephone number: 2693816984

4. Name, address and telephone number of a contact person familiar with the content of the notice:
   Name: Envirologic Technologies, Inc. - Erik Peterson
   Address: 2960 Interstate Parkway
   City/State: Kalamazoo/Michigan
   Telephone: 2693421100

5. If this Notice is provided pursuant to R 299.51017, provide the address and other location information for the *adjacent* property(s) onto which contamination is migrating, has migrated, or is likely to migrate. If this Notice is provided pursuant to R 299.5522, provide the address and other location information for *each* property onto which contamination has migrated. Notice should be sent to the property owner of record. If the impacted property is owned by the State of Michigan, notice should be sent to the department managing the property (i.e. a prison, state park, etc.). Notices to the Michigan Department of Transportation (MDOT) for state owned roadways should be sent to Ms. Heather Hicks, MDOT-Bureau of Transportation Planning, 425 W. Ottawa Street, P.O. Box 30050, Lansing, MI 48989. If it isn't readily apparent what state department manages the property, notices should be sent to Mr. Thomas Saxton, Tenant and Land Services, Department of Management and Budget, 1st Floor Lewis-Cass Building, P.O. Box 30026, Lansing, MI 48909.

   Address: 2650 N. Pitcher St.
   City/State: Kalamazoo Township/Michigan
   Property Tax ID number: 390603460020
   Other:
   Notified? No ☐ Yes ☒ Date: 6/11/09

   Address:
   City/State:
   Property Tax ID number:
   Other:
   Notified? No ☐ Yes ☐ Date:

   Address:
   City/State:
   Property Tax ID number:
   Other:
   Notified? No ☐ Yes ☐ Date:

   Address:
   City/State:
   Property Tax ID number:
   Other:
   Notified? No ☐ Yes ☐ Date:

   Address:
   City/State:
   Property Tax ID number:
   Other:
   Notified? No ☐ Yes ☐ Date:

   (Attach additional pages as needed)

6. Complete the Table on Page 3 of this Form for each hazardous substance which has migrated, or is likely to have migrated, beyond the property boundary at a concentration that exceeds a Generic Residential Cleanup Criterion developed by the DEQ pursuant to MCL 324.20120a(1). Complete and attach additional copies of Page 3, if necessary, to list all hazardous substances that must be reported. Include a scaled map or drawing that shows the location of sampling points identified on the Table on Page 3, the property boundaries, and the adjacent property owners if providing notice pursuant to R 299.1017(1) or all impacted property owners if providing notice pursuant to Rule 299.5522.

7. Provide a summary of the information which shows that contamination is emanating from, or has emanated from, and is present beyond the boundary of the source property at a concentration which exceeds that allowed by MCL 324.20120a(1)(a). This summary shall identify the environmental media affected, specific hazardous substances, and the concentrations of those hazardous substances in all affected environmental media at the property boundary and in any sample locations beyond the property boundary. The summary shall also describe the basis for the conclusion that the contamination is emanating, has emanated, or is present beyond the boundary of the source property, including whether the conclusion is based on groundwater analytical data or fate and transport modeling, both, or neither.

   GROUNDWATER ANALYTICAL DATA FOR MONITORING WELLS LOCATED ALONG THE SOUTHERN BOUNDARY OF THE SUBJECT PROPERTY AND WELLS LOCATED ON THE ADJACENT PARCEL SOUTH OF THE SUBJECT PROPERTY INDICATE THE PRESENCE OF VOLATILE HALOCARBONS IN EXCESS OF RESIDENTIAL/INDUSTRIAL DRINKING WATER AND GROUNDWATER-SURFACE WATER INTERFACE PROTECTION CRITERIA.

8. If the person making this notice has reason to believe that a migrating hazardous substance has affected, or is likely to affect, a private or public water supply, then that water supply must be identified here:

	YES	NO
9. Is this notice being submitted within the timeframes established under R 299.5522 and/or R 299.51017, as applicable?	☒	☐
10. Is this notice in addition to a notice submitted prior to *December 21, 2002?* (R 299.51017(4)(c))	☐	☒
11. Is this notice related to an oil and gas well permit (R 299.51017(2))? Permit #:	☐	☒
12. Is this notice related to an easement (R 299.51017(3))? (NOTE: All easement grantors *must* receive this notice.)	☐	☒
13. Has surface water been affected (R 299.51017(1) and R 299.5522(2))? (If yes, please identify the affected surface water body.)	☐	☒

CERTIFICATION:

With my signature below, I certify that I am the owner of the facility or that I am legally authorized to execute this notice on behalf of the owner or operator named on this form, and that to the best of my knowledge and belief the above representations are complete and accurate. I understand that intentionally submitting false information to the DEQ is a felony and may result in fines up to $25,000 for each violation.

Signature Shawn E. Brown Date June 11, 2009
(Owner or person legally authorized to bind the person making this report)

Name (Typed or Printed) Shawn Brown

Title (Typed or Printed) President/Member

MICHIGAN DEPARTMENT OF ENVIRONMENTAL QUALITY
REMEDIATION AND REDEVELOPMENT DIVISION

NOTICE OF MIGRATION OF CONTAMINATION

(Under the authority of Part 201, Natural Resources and Environmental Protection Act, 1994 Act 451, as amended, (NREPA) and the Rules promulgated thereunder)

See Item 6 on Page 2 of this Form for instructions to be used in completing this Table. Attach additional pages if necessary. The information to be included in each column of the Table is:

Column A Name of hazardous substance.
Column B Chemical Abstract Service (CAS) Number for the hazardous substance.
Column C Maximum hazardous substance concentration measured on the property, expressed in parts per billion (e.g., ug/L or ug/Kg). Report maximum concentration separately for each environmental medium.
Column D Sample location for Column C (relate to label on map).
Column E Environmental medium in which concentration reported in Column C was measured (e.g., soil or groundwater).
Column F Distance from point of maximum measured concentration (Column D) to property boundary, in direction of contaminant migration, if direction is known or can reasonably be inferred. If direction is unknown, list distance to nearest property boundary.
Column G Direction of contaminant migration, if known.
Column H Concentration closest to property boundary, if known. If a concentration lower than the maximum concentration reported in Column C has been measured at a point closer to the property boundary in the direction of contaminant migration, use Column I to list the concentration that was measured closest to the property boundary in the direction of contaminant migration.
Column I Sample location for Column H (relate to label on map).
Column J Environmental medium for measurement reported in Column H, if applicable.

A Hazardous Substance	B CAS Number	C Maximum Concentration	D Sample Location for "C"	E Environmental Medium for "C"	F Distance to Property Boundary	G Direction of Migration	H Boundary Concentration	I Sample Location for "H"	J Environmental Medium for "H"
Tetrachloroethene	127184	400	MW-6 @ 10.5 ft.	GW	110 ft.	SE	17	MW-8 @ 6.75 ft.	GW
Trichloroethene	79016	58	TMW-18 @ 19 ft.	GW	5 ft.	SE	58	TMW-18 2@ 19 ft.	GW
cis-1,2-dichloroethene	156592	55	MW-8 @ 6.75 ft.	GW	5 ft.	SE	55	MW-8 @ 6.75 ft.	GW
Vinyl Chloride	75014	37	MW-8 @ 6.75 ft.	GW	5 ft.	SE	37	MW-8 @ 6.75 ft.	GW

Total Number Samples Collected: 74 Total Number of Samples Exceeding Criteria: 68

NOTICE OF MIGRATION OF CONTAMINATION

(Under the authority of Part 201, Natural Resources and Environmental Protection Act, 1994 Act 451, as amended, (NREPA) and the Rules promulgated thereunder)

A scaled map or drawing showing these locations and the property boundaries must be submitted with this Notice.

45244A PCE CONCENTRATIONS / WBL101107 / 1:1

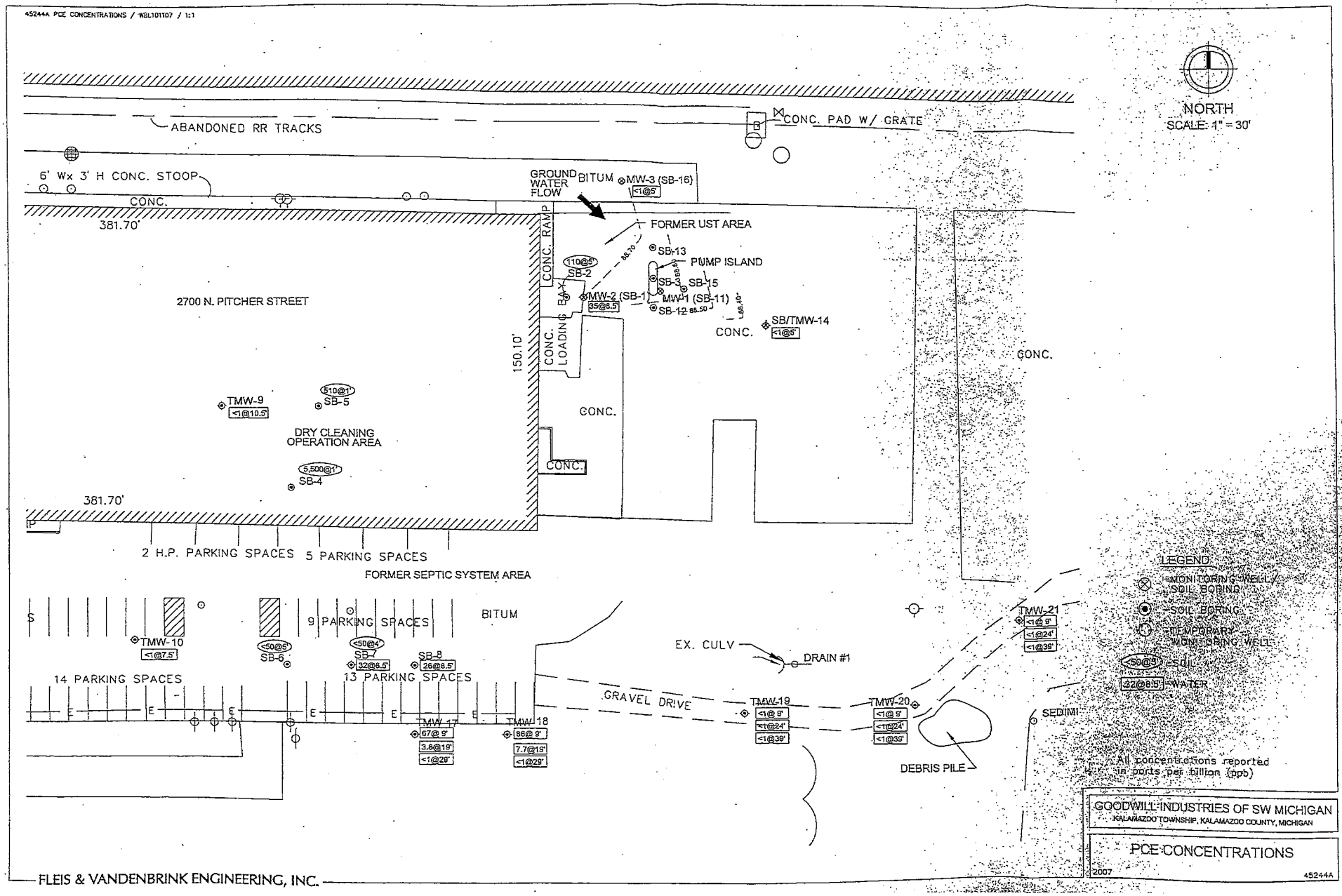

GOODWILL INDUSTRIES OF SW MICHIGAN
KALAMAZOO TOWNSHIP, KALAMAZOO COUNTY, MICHIGAN

PCE CONCENTRATIONS

2007

45244A

FLEIS & VANDENBRINK ENGINEERING, INC.

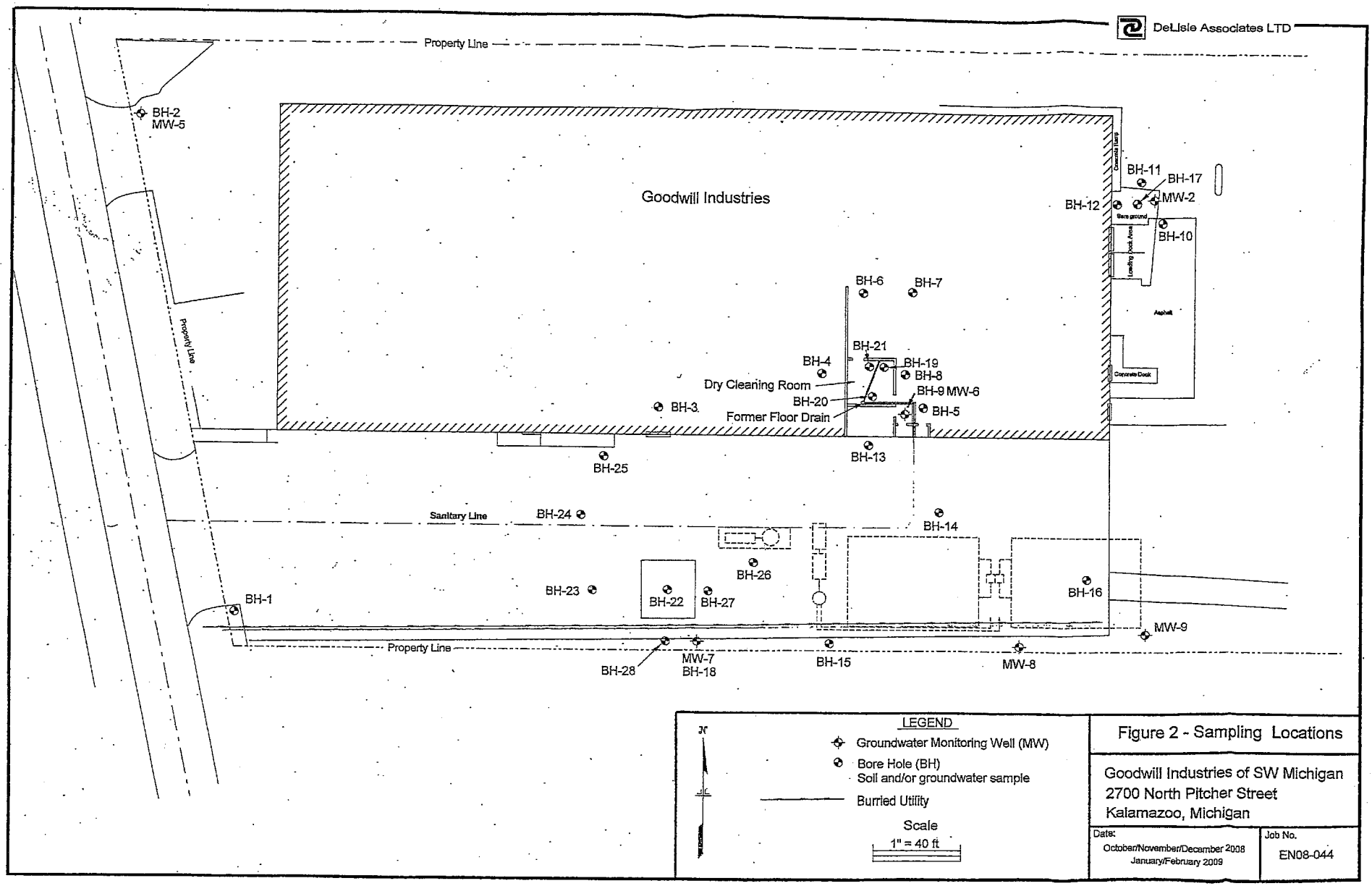
DeLisle Associates LTD
Property Line
Goodwill Industries
BH-2
MW-5
BH-11
BH-17
MW-2
BH-12
BH-10
BH-6
BH-7
BH-21
BH-4
BH-19
BH-8
Dry Cleaning Room
BH-9 MW-6
BH-20
BH-3
BH-5
Former Floor Drain
BH-13
BH-25
Sanitary Line
BH-24
BH-14
BH-26
BH-23
BH-22
BH-27
BH-16
BH-1
MW-9
Property Line
BH-28
MW-7
BH-18
BH-15
MW-8
LEGEND
Groundwater Monitoring Well (MW)
Bore Hole (BH)
Soil and/or groundwater sample
Burried Utility
Scale
1" = 40 ft
Figure 2 - Sampling Locations
Goodwill Industries of SW Michigan
2700 North Pitcher Street
Kalamazoo, Michigan
Date:
October/November/December 2008
January/February 2009
Job No.
EN08-044

APPENDIX C

SVE SYSTEM PERFORMANCE DOCUMENTATION

DeLisle Associates LTD
Geologists ▫ Industrial Hygienists ▫ Educators

Mr. Mark DuCharme
Department of Environmental Quality
Remediation and Redevelopment Division
7953 Adobe Road
Kalamazoo, Michigan 49009-5026

Via Email
ducharmem@michigan.gov

Subject: Goodwill Industries, 2700 North Pitcher Street, Kalamazoo, Michigan

DeLisle Associates LTD (DeLisle) has recently completed additional investigative activities at Goodwill Industries, 2700 North Pitcher Street, Kalamazoo, Michigan.

In summary, the work was conducted inside the building for the collection of soil samples and installation of soil gas wells for monitoring the soil vapor extraction system (SVE). A total of thirteen (13) soils borings were conducted with twelve (12) soil samples being collected and submitted for laboratory analysis. Seven (7) soil gas wells (SGWs) were installed in selected borings to provide for soil gas sampling at the five (5) foot interval below grade and also to provide measuring points for SVE vacuum influence. Site Map-1 depicts soil sampling and soil gas well (SGW) locations.

Analytical results showed six (6) of the twelve (12) samples indicate the presence of only Tetrachloroethene (PCE). Four (4) of the six (6) samples contained PCE above the Drinking Water Protection Criteria (DWPC). All samples with PCE detections were well below the Soil Volatilization to Indoor Air Inhalation Criteria (SVIIC). Provided are a Soil Results table for the twelve (12) soil samples, Table 3-Analytical Results comparing sample results to Industrial Criteria, and the laboratory analytical report.

The SGWs are constructed with 1 inch diameter PVC material. The 10 slot well screen is one (1) foot long and placed to straddle the 5 foot interval below grade. Clean sand was placed around the well screen and up the casing to a bentonite seal. The SGWs were finished with a flush mount protective cover for future access.

During SVE operation, vacuum measurements were collected from the seven (7) SGWs. Based on the results, the radius of influence for each vapor extraction well (VE) appears to exceed the originally estimated radius of 30 feet. Site Map-2 shows the vapor extraction radius of influence for the minimal operating capacity of the SVE unit.

In addition, air samples were collected from the SVE unit to monitor the extracted vapors for compliance with air discharge requirements. The analytical results of the SVE total extracted vapors measured 20 mg/m^3 for PCE, and below the method detection level ($<1 mg/m^3$) between carbon vessels and at the vent discharge.

Sincerely,

Andy Graham

Andy Graham - CPG
Environmental Department Manager
Encs.

5050 S. Sprinkle Road, Portage, Michigan 49002
Phone 269.373.4500 Fax 269.373.1044
www.delisleassoc.net

DeLisle Associates LTD
Geologists • Industrial Hygienists • Educators

Goodwill Industries of Southwest Michigan

Soil Results Table

May 2009

					Results ug/Kg			
Location	Sample No.	Date	Depth feet	Type (S/W)	PCE	TCE	cis-DCE	VC
BH-29	EN08-101-66	5/18/09	4.5-5.0	S	<50	<50	<50	<40
BH-30	EN08-101-67	5/18/09	4.0-4.5	S	<50	<50	<50	<40
BH-31	EN08-101-68	5/18/09	4.5-5.0	S	<50	<50	<50	<40
BH-32	EN08-101-69	5/18/09	4.5-5.0	S	<50	<50	<50	<40
BH-33	EN08-101-70	5/18/09	6.0-6.5	S	**110**	<50	<50	<40
BH-34	EN08-101-71	5/19/09	4.0-4.5	S	**68**	<50	<50	<40
BH-35	EN08-101-72	5/19/09	4.0-4.5	S	<50	<50	<50	<40
BH-36	EN08-101-73	5/19/09	3.5-4.0	S	**62**	<50	<50	<40
BH-37	EN08-101-74	5/19/09	3.0-3.5	S	**550**	<50	<50	<40
BH-38	No Sample	5/19/09	various	S	Field screen soils with PID			
BH-39	EN08-101-75	5/19/09	3.5-4.0	S	**1,300**	<50	<50	<40
BH-40	EN08-101-76	5/19/09	4.5-5.0	S	**150**	<50	<50	<40
BH-41	EN08-101-77	5/19/09	3.5-4.0	S	<50	<50	<50	<40

PCE=Tetrachloroethene TCE=Trichloroethene cis-DCE=cis-1,2 Dichloroethene VC=Vinyl Chloride TMB=Trimethylbenzene

5050 S. Sprinkle Road, Portage, Michigan 49002
Phone 269.373.4500 Fax 269.373.1044
www.delisleassoc.net

Table 3-Analytical Results: Soil May 2009

Volatiles (VOCs) by GC/MS (5035) (µg/Kg) - EPA Method Reference SW8260B

MDEQ Part 201 Industrial and Commercial II, III & IV Generic Cleanup Criteria & Screening Levels

Substance		Soil Boring / Soil Sample Location												Groundwater Protection			Indoor Air	Ambient Air				Direct Contact	
Chemical Name	CAS#	BH-29	BH-30	BH-31	BH-32	BH-33	BH-34	BH-35	BH-36	BH-37	BH-39	BH-40	BH-41	DWPC	GSIPC	GCPC	SVIIC	VSIC (IS)	VSIC (5M)	VSIC (2M)	PSIC	DCC	C_{SAT}
cis-DCE	156592	ND	ND	ND	ND	ND	ND	ND	ND	ND	ND	ND	ND	1,400	12,000	6.4E+5	**41,000**	2.1E+5	4.3E+5	1.0E+6	1.0E+9	6.4E+5	6.4E+5
PCE	127184	ND	ND	ND	ND	110	68	ND	62	550	1,300	150	ND	100	900	88,000	**60,000**	1.8E+5	1.4E+6	3.3E+6	6.8E+9	88,000	88,000
TCE	79016	ND	ND	ND	ND	ND	ND	ND	ND	ND	ND	ND	ND	100	4,000	4.4E+5	**37,000**	2.6E+5	4.4E+5	1.1E+6	2.3E+9	5.0E+5	5.0E+5
1,2,4-TMB	95636	ND	ND	ND	ND	ND	110	ND	ND	ND	ND	ND	63	2,100	570	1.1E+5	**1.1E+5**	2.1E+7	6.0E+8	6.0E+8	3.6E+10	1.1E+5	1.1E+5

cis-DCE = cis-1,2-Dichloroethylene PCE = Tetrachloroethylene TCE = Trichloroethylene 1,2,4-TMB = 1,2,4-Trimethylbenzene 1,3,5-TMB = 1,3,5-Trimethylbenzene

ND = Parameter concentration is below the analytical Method Detection Level (MDL) or Practical Quantitaion Limit (PQL) and reported as "Non-Detect".

[ ] = Parameter concentration exceeds one (1) or more applicable MDEQ Part 201 criteria for soil.

DeLisle Associates LTD

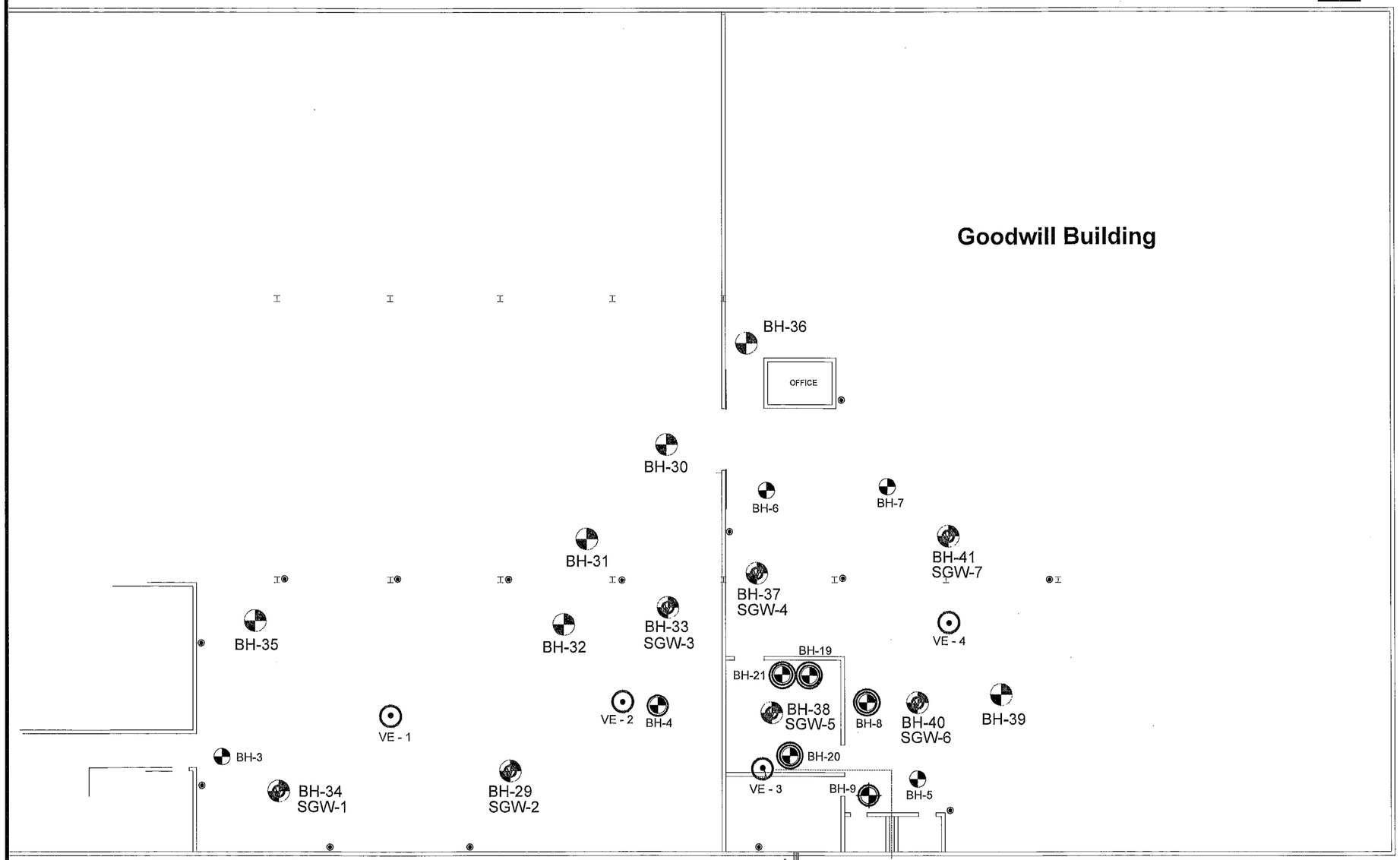

LEGEND

BH-35 Soil Borings BH-29 to BH-41 Conducted in May 2009

BH-29 SGW-2 Soil Boring with Soil Gas Well installed.

VE - 1 Soil Vapor Extraction Well

Air Vent (14)

Vacuum at 25 cfm per VE well (100 cfm SVE system total)

Soil sample with PCE and TCE exceeding Indoor Air Criteria

Soil sample with PCE exceeding Indoor Air Criteria

N

Scale 1"=20 ft

5 10

SITE MAP -1

Soil Sampling and Soil Gas Well (SGW) Locations

Goodwill Industries of SW Michigan
2700 North Pitcher Street
Kalamazoo, Michigan

May 18, 2009

DeLisle Associates LTD

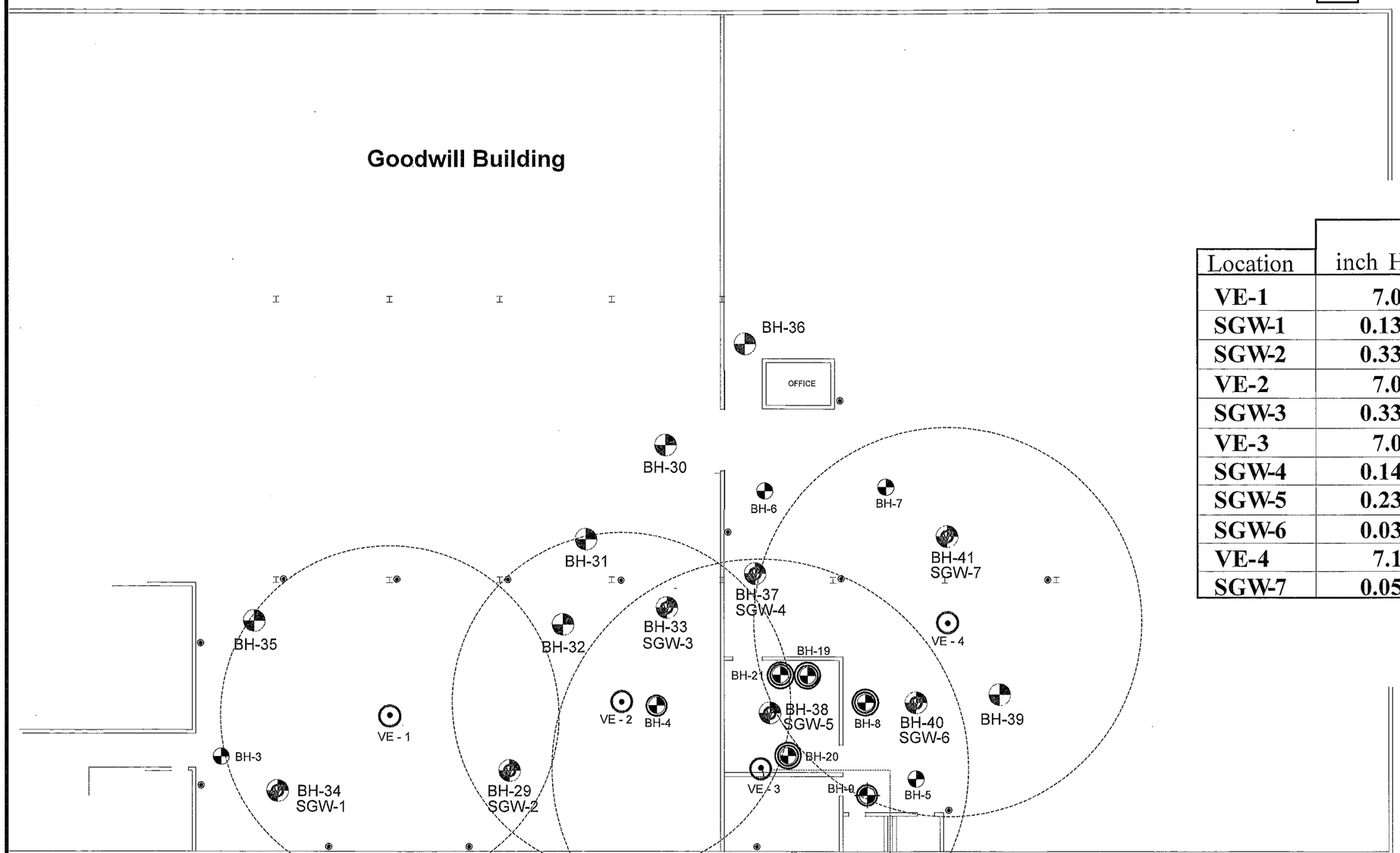

Location	Vacuum inch H_2O	Vacuum CFM
VE-1	7.0	~20-25
SGW-1	0.135	---
SGW-2	0.330	---
VE-2	7.0	~20-25
SGW-3	0.330	---
VE-3	7.0	~20-25
SGW-4	0.145	---
SGW-5	0.235	---
SGW-6	0.030	---
VE-4	7.1	~20-25
SGW-7	0.055	---

LEGEND

- BH-35 — Soil Borings BH-29 to BH-41 Conducted in May 2009
- BH-29 SGW-2 — Soil Boring with Soil Gas Well installed.
- VE - 1 — Soil Vapor Extraction Well
- Air Vent (14)
- Soil sample with PCE and TCE exceeding Indoor Air Criteria
- Soil sample with PCE exceeding Indoor Air Criteria
- Vapor Extraction Well Minimum Radius of Influence

N

Scale 1"=20 ft

5 10

SITE MAP -2

Vapor Extraction Radius of Influence

Goodwill Industries of SW Michigan
2700 North Pitcher Street
Kalamazoo, Michigan

May 29, 2009