APPENDIX F

STATISTICAL METHODS

This appendix provides guidance on the statistical analysis of waste testing and environmental monitoring data. You should select the statistical test during the Data Quality Assessment (DQA) phase after you review the data quality objectives, the sampling design, and the characteristics of the data set. See guidance provided in Section 8.

Additional Guidance on the Statistical Analysis of Waste Testing and Environmental Monitoring Data

USEPA. 2000d. *Guidance For Data Quality Assessment, EPA QA/G-9*, (QA00 version). EPA/600/R-96/084. Office of Research and Development, Washington, D.C.

The statistical methods in this appendix are appropriate for use in evaluating sample analysis results when comparing constituent concentrations in a waste or environmental medium to a *fixed standard*. Users of this guidance may have other objectives such as comparing two populations, detecting trends, or characterizing the spatial pattern of contamination. If so, review other guidance or seek assistance from a professional environmental statistician.

Note that not all RCRA standards require the waste handler to use sampling, analysis, and statistical tests to measure compliance. However, if sampling and analysis is used by the waste handler to measure compliance with a RCRA standard, then statistical methods may be used to help quantify uncertainty associated with the decisions made using the data – even where there is no regulatory obligation to do so (see also Sections 2 and 3).

This appendix is divided into subsections that describe the following statistical methods:

F.1 Testing Distributional Assumptions
- F.1.1 Overview and Recommendations
- F.1.2 Shapiro-Wilk Test for Normality ($n \leq 50$)

F.2 Confidence Limits for the Mean
- F.2.1 Confidence Limits for the Mean of a Normal Distribution
- F.2.2 Confidence Limits for a Normal Mean When Composite Sampling Is Used
- F.2.3 Confidence Limits for a Lognormal Mean
- F.2.4 Confidence Limits for the Mean of a Non-normal or Unknown Distribution

F.3 Tests for a Proportion or a Percentile
- F.3.1 Parametric Upper Confidence Limits for an Upper Percentile
- F.3.2 Using a Simple Exceedance Rule Method for Determining Compliance With A Fixed Standard

F.4 Treatment of Nondetects
- F.4.1 Recommendations
- F.4.2 Cohen's Adjustment

Table F-1 provides a summary of frequently used statistical equations. See Appendix G for statistical tables used with these methods.

EPAPAV0054480

Table F-1. Summary of Basic Statistical Terminology Applicable to Sampling Plans for Solid Waste

Terminology	***Symbol***	***Mathematical Equation***	***Equation No.***
Variable (e.g., barium or endrin)	x	--	--
Individual measurement of variable	x_i	--	--
Simple Random Sampling and Systematic Random Sampling			
Mean of measurements generated from the samples (sample mean)	$\bar{x}$	$\bar{x} = \frac{1}{n}\sum_{i=1}^{n} x_i$ where n = number of sample measurements.	1
Variance of sample	s^2	$s^2 = \frac{1}{n-1}\sum_{i=1}^{n}(x_i - \bar{x})^2$	2
Standard deviation of sample	s	$s = \sqrt{s^2}$	3
Standard error (also standard deviation of the mean)	$s_{\bar{x}}$	$s_{\bar{x}} = \frac{s}{\sqrt{n}}$	4
Approximate number of samples to estimate the mean (financial constraints not considered) (See Section 5.4.1)	n	$n = \frac{(z_{1-\alpha} + z_{1-\beta})^2 s^2}{\Delta^2} + \frac{z_{1-\alpha}^2}{2}$ where the "z" values are obtained from the last row of Table G-1 in Appendix G.	8
Approximate number of samples to test a proportion against a fixed standard (See Section 5.5.1).	n	$n = \left[\frac{z_{1-\beta}\sqrt{GR(1-GR)} + z_{1-\alpha}\sqrt{AL(1-AL)}}{\Delta^2}\right]^2$	15
Number of samples to test a proportion when the decision rule specifies zero nonconforming samples (See Section 5.5.2).	n	$n = \log(\alpha)/\log(p)$ where p equals the proportion of the waste or media exceeded by the largest sample	16

EPAPAV0054481

Table F-1. (Continued)

Terminology	*Symbol*	*Mathematical Equation*	*Equation No.*
Stratified Random Sampling (Proportional Allocation)			
Arithmetic mean of the measurements generated from the samples obtained from each hth stratum	$\bar{x}_h$	$\bar{x}_h = \frac{1}{n_h}\sum_{i=1}^{n_h} x_{hi}$ where n_h = number of sample measurements obtained from each hth stratum.	--
Variance of measurements generated from the samples obtained from each hth stratum	s_h^2	$s_h^2 = \frac{1}{n_h - 1}\sum_{i=1}^{n_h}(x_{hi} - x_h)^2$	--
The weighting factor assigned to each hth stratum when stratified random sampling is used	W_h	--	--
Overall sample mean using stratified random sampling	$\bar{x}_{st}$	$\bar{x}_{st} = \sum_{h=1}^{L} W_h \bar{x}_h$	9
Standard error of the mean for a stratified random sample	$s_{\bar{x}_{st}}$	$s_{\bar{x}_{st}} = \sqrt{\sum_{h=1}^{L} W_h^2 \frac{s_h^2}{n_h}}$	10
Total number of samples to collect from a solid waste to estimate the mean using stratified random sampling (proportional allocation)	n	$n = \frac{\left[t_{1-\alpha/2,df} + t_{1-\beta,df}\right]^2}{\Delta^2}\sum_{h=1}^{L} W_h s_h^2$	11
Degrees of freedom associated with the t-quantile in Table G-1, Appendix G, when stratified random sampling is used	df	$df = \left[\sum_{h=1}^{L} W_h s_h^2\right]^2 \Big/ \sum_{h=1}^{L} \frac{W_h^2 s_h^4}{nW_h - 1}$	12

F.1 Testing Distributional Assumptions

F.1.1 Overview and Recommendations

The assumption of normality is very important as it is the basis for many statistical tests. A normal distribution is a reasonable model of the behavior of certain random phenomena and often can be used to approximate other probability distributions. In addition, the Central Limit Theorem and other limit theorems state that as the sample size gets large, some of the sample summary statistics (such as the sample mean) behave as if they are normally distributed variables. As a result, a common assumption associated with parametric tests or statistical models is that the errors associated with data or a model follow a normal distribution.

While assumption of a normal distribution is convenient for statistical testing purposes, it is not always appropriate. Sometimes data are highly skewed. In environmental applications, it is not unusual to encounter data that exhibit a lognormal distribution in which the *natural* logarithms of the data exhibit a normal distribution. Statistical tests can be used to verify the assumption of normality or lognormality, but the conclusion of lognormality should not be based on the outcome of a statistical test alone. There are several physical phenomena that can cause the underlying distribution to appear lognormal when in fact it is not. For example, Singh, et al. (1997) note that the presence of a relatively small highly contaminated area in an otherwise uncontaminated area can cause sampling results to indicate a lognormal distribution. In such a situation, it may be more appropriate to treat the areas as two separate decision units or use a stratified sampling design. In other cases, sampling bias may cause a population to appear lognormal. For example, analytical results could be skewed if highly concentrated portions of the waste are over- or under-represented by the sampling procedure.

There are many methods available for verifying the assumption of normality ranging from simple to complex. This guidance recommends use of the Shapiro-Wilk test for normality. Use of the test is appropriate when the number of samples (n) is 50 or less. For n greater than 50, an alternative test for normality should be used. One alternative presented in EPA's QA/G-9 guidance (USEPA 2000d) and the DataQUEST software (USEPA 1997b) is Filliben's Statistic (Filliben 1975). Refer to EPA's QA/G-9 (USEPA 2000d) guidance or EPA's statistical guidance for ground-water monitoring data (USEPA 1989b and 1992b) for other graphical and statistical goodness-of-fit tests.

F.1.2 Shapiro-Wilk Test for Normality ($n \leq 50$)

Purpose and Background

This section provides the method for performing the Shapiro-Wilk test for normality. The test is easily performed using statistical software such as EPA's DataQUEST freeware (USEPA 1997b); however, the test also can be performed manually, as described here.

The Shapiro-Wilk test is recommended as a superior method for testing normality of the data. It is based on the premise that if the data are normally distributed, the ordered values should be highly correlated with corresponding quantiles (z-scores) taken from a normal distribution (Shapiro and Wilk 1965). In particular, the Shapiro-Wilk test gives substantial weight to evidence of non-normality in the tails of a distribution, where the robustness of statistical tests based on the normality assumption is most severely affected.

EPAPAV0054483

The Shapiro-Wilk test statistic (W) will tend to be large when a probability plot of the data indicates a nearly straight line. Only when the plotted data show significant bends or curves will the test statistic be small. The Shapiro-Wilk test is considered to be one of the very best tests of normality available (Miller 1986, Madansky 1988).

Procedure

Step 1. Order the data from least to greatest, labeling the observations as x_i for $i = 1 \ldots n$. Using the notation $x_{(j)}$, let the jth order statistic from any data set represent the jth smallest value.

Step 2. Compute the differences $\left[x_{(n-i+1)} - x_{(i)}\right]$ for each $i = 1 \ldots$. Then determine k as the greatest integer less than or equal to $(n/2)$.

Step 3. Use Table G-4 in Appendix G to determine the Shapiro-Wilk coefficients, a_{n-i+1}, for $i = 1 \ldots n$. Note that while these coefficients depend only on the sample size (n), the order of the coefficients must be preserved when used in step 4 below. The coefficients can be determined for any sample size from $n = 3$ up to $n = 50$.

Step 4. Compute the quantity b given by the following formula:

$$b = \sum_{i=1}^{k} b_i = \sum_{i=1}^{k} a_{n-i+1}\left(x_{(n-i+1)} - x_{(i)}\right) \qquad \textbf{Equation F.1}$$

Note that the values b_i are simply intermediate quantities represented by the terms in the sum of the right-hand expression in the above equation.

Step 5. Calculate the standard deviation (s) of the data set. Then compute the Shapiro-Wilk test statistic using the following formula:

$$W = \left[\frac{b}{s\sqrt{n-1}}\right]^2 \qquad \textbf{Equation F.2}$$

Step 6. Given the significance level (α) of the test (for example, 0.01 or 0.05), determine the critical point of the Shapiro-Wilk test with n observations using Table G-5 in Appendix G. Compare the Shapiro-Wilk statistic (W) against the critical point (w_c). If the test statistic exceeds the critical point, accept normality as a reasonable model for the underlying population; however, if $W < w_c$, reject the null hypothesis of normality at the α-level and decide that another distributional model would provide a better fit.

An example calculation of the Shapiro-Wilk test for normality is presented in Box F.1.

EPAPAV0054484

Box F.1. Example Calculation of the Shapiro-Wilk Test for Normality

Use the Shapiro-Wilk test for normality to determine whether the following data set, representing the total concentration of nickel in a solid waste, follows a normal distribution: 58.8, 19, 39, 3.1, 1, 81.5, 151, 942, 262, 331, 27, 85.6, 56, 14, 21.4, 10, 8.7, 64.4, 578, and 637.

Solution

Step 1. Order the data from smallest to largest and list, as in Table F-2. Also list the data in reverse order alongside the first column.

Step 2. Compute the differences $\left[x_{(n-i+1)} - x_{(i)}\right]$ in column 4 of the table by subtracting column 2 from column 3. Because the total number of samples is $n = 20$, the largest integer less than or equal to $(n/2)$ is $k = 10$.

Step 3. Look up the coefficients a_{n-i+1} from Table G-4 in Appendix G and list in column 4.

Step 4. Multiply the differences in column 4 by the coefficients in column 5 and add the first k products (b_i) to get quantity b_i, using Equation F.1.

$$b = \left[.4734(941.0) + .3211(633.9) + \cdots .0140(2.8)\right] = 932.88$$

Step 5. Compute the standard deviation of the sample, s = 259.72, then use Equation F.2 to calculate the Shapiro-Wilk test statistic:

$$W = \left[\frac{932.88}{259.72\sqrt{19}}\right]^2 = 0.679$$

Step 6. Use Table G-5 in Appendix G to determine the .01-level critical point for the Shapiro-Wilk test when n = 20. This gives W_c = 0.868. Then, compare the observed value of W = 0.679 to the 1-percent critical point. Since W < 0.868, the sample shows significant evidence of non-normality by the Shapiro-Wilk test. The data should be transformed using natural logs and rechecked using the Shapiro-Wilk test before proceeding with further statistical analysis.

EPAPAV0054485

Table F-2. Example Calculation of the Shapiro-Wilk Test (see example in Box F.1)

i	$x_{(i)}$	$x_{(n-i+1)}$	$x_{(n-i+1)} - x_{(i)}$	a_{n-i+1}	b_i
1	1	942	941	0.4734	445.47
2	3.1	637	634	0.3211	203.55
3	8.7	578	569	0.2565	146.03
4	10	331	321	0.2085	66.93
5	14	262	248	0.1686	41.81
6	19	151	132	0.1334	17.61
7	21.4	85.6	64.2	0.1013	6.5
8	27	81.5	54.5	0.0711	3.87
9	39	64.4	25.4	0.0422	1.07
10	56	58.8	2.8	0.0140	0.04
11	58.8	56	–2.8		b = 932.88
12	64.4	39	–25.4		
13	81.5	27	–54.5		
14	85.6	21.4	–64.2		
15	151	19	–132.0		
16	262	14	–248.0		
17	331	10	–321.0		
18	578	8.7	–569.3		
19	637	3.1	–633.9		
20	942	1	–941.0		

F.2 Confidence Limits for the Mean

When a fixed standard or limit is meant to represent an average or mean concentration level, attainment of the standard can be measured using a confidence limit on the mean. A confidence limit is then compared with the fixed compliance limit. Under the null hypothesis that the mean concentration in the waste exceeds the standard unless proven otherwise, statistically significant evidence of compliance with the standard is shown if and only if the entire confidence interval lies below the standard. By implication, the key test then involves comparing the upper confidence limit (UCL) to the standard. In other words, the entire confidence interval must lie below the standard for the waste to be compliant with the standard. If the UCL exceeds the regulatory limit, on the other hand, we cannot conclude the mean concentration is below the standard.

F.2.1 Confidence Limits for the Mean of a Normal Distribution

Requirements and Assumptions

Confidence intervals for the mean of a normal distribution should be constructed only if the data pass a test of approximate normality or at least are reasonably symmetric. It is strongly recommended that a confidence interval not be constructed with less than four measurements, though the actual number of samples should be determined as part of the planning process. The reason for this is two-fold: (1) the formula for a normal-based confidence interval on the

EPAPAV0054486

mean involves calculation of the sample standard deviation (s), which is used as an estimate of the underlying population standard deviation (this estimate may not be particularly accurate when the sample size is smaller than four), and (2) the confidence interval formula also involves a Student's t-quantile based on $n - 1$ degrees of freedom, where n equals the number of samples used in the calculation (see Table G-1 in Appendix G). When n is quite small, the t-quantile will be relatively large, leading to a much wider confidence interval than would be expected with a larger n. For example, at a 90-percent confidence level, the appropriate t-quantile would be $t = 3.078$ for $n = 2$, $t = 1.638$ for $n = 4$, and $t = 1.415$ for $n = 8$.

Procedure

Step 1. Check the n sample concentrations for normality. If the normal model is acceptable, calculate the mean ($\bar{x}$) and standard deviation (s) of the data set. If the lognormal model provides a better fit, see Section F.2.3.

Step 2. Given the desired level of confidence, ($1 - \alpha$), calculate the upper confidence limit as follows:

$$UCL = \bar{x} + t_{1-\alpha,df} \frac{s}{\sqrt{n}} \qquad \textbf{Equation F.3}$$

where $t_{1-\alpha,df}$ is obtained from a Student's t-table (Table G-1) with the appropriate degrees of freedom. If simple random or systematic sampling is used, then $df = n - 1$.

If stratified random sampling is used, calculate the UCL as follows:

$$UCL_{st} = \bar{x}_{st} + t_{1-\alpha,df} s_{\bar{x}_{st}} \qquad \textbf{Equation F.4}$$

where $\bar{x}_{st}$ is the overall mean from Equation 8, the df is obtained from Equation 11, and the standard error ($s_{\bar{x}_{st}}$) is obtained from Equation 9 (see also Table F-1 for these equations).

Step 3. Compare the UCL calculated in Step 2 to the fixed standard. If the UCL is less than the standard, then you can conclude, with $100(1 - \alpha)$% confidence, that the mean concentration of the constituent of concern is less than the standard. If, however, the upper confidence bound is greater than the standard, then there is not sufficient evidence that the mean is less than the standard.

An example calculation of the UCL on the mean is provided in Box F.2.

EPAPAV0054487

Box F.2. Example Calculation of the UCL for a Normal Mean

A generator obtains ten samples of waste to demonstrate that the waste qualifies for the comparable fuels exclusion under 40 CFR 261.38. The samples are obtained using a simple random sampling design. Analysis of the samples for lead generated the following results: 16, 17.5, 21, 22, 23, 24, 24.5, 27, 31, and 38 ppm. The regulation requires comparison of a 95% UCL on the mean to the specification level. The specification level is 31 ppm.

Solution

Step 1. Using the Shapiro-Wilk test, we confirmed that the normal model is acceptable. The mean is calculated as 24.4 ppm and the standard deviation as 6.44 ppm.

Step 2. The RCRA regulations at 40 CFR 261.38(c)(8)(iii)(A) require that the determination be made with a level of confidence, $100(1-\alpha)\%$, of 95 percent. We turn to Table G-1 (Appendix G) and find the Student's t value is 1.833 for $n-1=9$ degrees of freedom. The UCL is calculated as follows:

$$UCL = 24.4 + 1.833 \frac{6.44}{\sqrt{10}} = 28.1 \approx 28$$

Step 3. We compare the limit calculated in step 2 to the fixed standard. Because the UCL (28 ppm) is less than the regulatory level (31 ppm), we can conclude with at least 95-percent confidence that the mean concentration of the constituent in the waste is less than 31 ppm.

F.2.2 Confidence Limits for a Normal Mean When Composite Sampling Is Used

If a composite sampling strategy has been employed to obtain a more precise estimate of the mean, confidence limits can be calculated from the analytical results using the same procedure outlined above in Section F.2.1, except that n represents the number of composite samples and s represents the standard deviation of the n composite samples.

F.2.3 Confidence Limits for a Lognormal Mean

If the results of a test for normality indicate the data set may have a lognormal distribution, and a confidence limit on the mean is desired, then a special approach is required. It is *not* correct to simply transform the data to the log scale, calculate a normal-based mean and confidence interval on the logged data, and transform the results back to the original scale. It is a common mistake to do so. Invariably, a transformation bias will be introduced and the approach will underestimate the mean and UCL. In fact, the procedure just described actually produces a confidence interval around the *median* of a lognormal population rather than the higher-valued *mean*.

To calculate a UCL on the mean for data that exhibit a lognormal distribution, this guidance recommends use of a procedure developed by Land (1971, 1975); however, as noted below, Land's procedure should be used with caution because it relies heavily on the lognormal assumption, and if that assumption is not true, the results may be substantially biased.

Requirements and Assumptions

Confidence intervals for the mean of a lognormal distribution should be constructed only if the data pass a test of approximate normality *on the log-scale*. While many environmental

populations tend to follow the lognormal distribution, it is usually wisest to first test the data for normality on the original scale. If such a test fails, the data can then be transformed to the log-scale and retested.

Cautionary Note: Even if a data set passes a test for normality on the log scale, do not proceed with calculation of the confidence limits using Land's procedure until you have considered the following:

- The skewness of the data set may be due to biased sampling, mixed distributions of multiple populations, or outliers, and not necessarily due to lognormally distributed data (see Singh, et al. 1997). Review the sampling approach, the physical characteristics of the waste or media, and recheck any unusually high values before computing the confidence limits. Where there is spatial clustering of sample data, declustering and distribution weighting techniques (Myers 1997) may also be appropriate.

- If the number of samples (n) is small, the confidence interval obtained by Land's procedure could be remarkably wide. Singh, et al. (1997) have recommended that Land's procedure not be used for cases in which the number of samples is less than 30. They argue that in many cases the resulting UCL will be an order of magnitude larger than the maximum observed data value. Even higher values for the UCL could be generated if the coefficient of variation (CV or the standard deviation divided by the mean) is greater than 1.

If the lognormal distribution is the best fit, and the number of samples (n) is small, then Land's method (provided below) can still be used, though a "penalty" will be paid for the small sample size. If the number of samples is small and the distribution is skewed to the right, one of the following alternative approaches should be considered: (1) Simply treat the data set as if the parent distribution were normal and use the parametric Student-t method to calculate confidence limits using the *untransformed* (original scale) data (as described in Section F.2.1). If, however, this normal theory approach is used with highly skewed data, the actual confidence level achieved by the test will be less than that desired (Porter, et al. 1997); (2) UCLs on the mean could be constructed using procedures such as the "bootstrap" or the "jackknife," as recommended by Singh, et al. (1997) (see Section F.2.4).

The approach for Land's "H-statistic" method is given below:

Procedure

Step 1. Test the data for normality on the log-scale. After determining that the lognormal distribution is a good fit, transform the data via logarithms (the natural log is used) and denote the transformed measurements by y_i.

Step 2. Compute the sample mean and the standard deviation (s_y) from the log-scale measurements.

Step 3. Obtain Land's bias-correction factor(s) ($H_{1-\alpha}$) from Table G-6 in Appendix G, where the correct factor depends on the sample size (n), the log-scale sample

EPAPAV0054489

standard deviation (s_y), and the desired confidence level ($1-\alpha$).[1]

Step 4. Plug all these factors into the equations given below for the UCL.

$$UCL_{1-\alpha} = \exp\left[\bar{y} + .5s_y^2 + \frac{s_y H_{1-\alpha}}{\sqrt{n-1}}\right] \qquad \textbf{Equation F.5}$$

Step 5. Compare the UCL against the fixed standard. If the UCL is less than the standard, then you can conclude with 100($1-\alpha$)% confidence that the mean concentration of the constituent of concern is less than the standard. If, however, the upper confidence bound is greater than the standard, then there is not sufficient evidence that the mean is less than the standard.

An example calculation of the UCL on a lognormal mean is given in Box F.3.

Box F.3: Example Calculation of the UCL on a Lognormal Mean

This example is modified after an example provided in *Supplemental Guidance to RAGS: Calculating the Concentration Term* (USEPA 1992a).

The concentration of lead (total in mg/Kg) in 31 soil samples obtained using a simple random sampling design are: 1, 3, 13, 14, 18, 20, 21, 36, 37, 41, 42, 45, 48, 59, 60, 110, 110, 111, 111, 136, 137, 140, 141, 160, 161, 200, 201, 230, 400, 1300, and 1400. Using these data, calculate a 90% UCL on the mean.

Solution

Step 1. Using the Shapiro-Wilk test, the natural logarithms of the data set are shown to exhibit a normal distribution. The data are then transformed to natural logs.

Step 2. The mean of logged data is $\bar{y} = 4.397$. The standard deviation is $s_y = 1.509$.

Step 3. The bias-correction factor ($H_{1-\alpha} = 2.282$) is obtained from Table G-6 for $n = 31$ and a confidence level of 90 percent.

Step 4. Plug the factors into the equation for the upper (UCL) confidence limit.

$$UCL_{1-\alpha} = \exp\left[4.222 + 0.5(1.509)^2 + \frac{1.509(2.282)}{\sqrt{31-1}}\right]$$

$$= \exp(5.989) = 399\ \text{mg/kg}$$

Step 5. The 90-percent UCL on the mean is 399 mg/kg.

[1] For a more extensive tabulation of Land's factors, see Land (1975) or Tables A10 through A13 in Gilbert (1987).

F.2.4 Confidence Limits for the Mean of a Non-normal or Unknown Distribution

If the assumption of a normal or lognormal distribution cannot be justified, then you may construct a UCL on the mean using one of several alternative methods described in this section.

Bootstrap or Jackknife Methods: Bootstrap and jackknife procedures, as discussed by Efron (1981) and Miller (1974), typically are nonparametric statistical techniques which can be used to reduce the bias of point estimates and construct approximate confidence intervals for parameters such as the population mean. These procedures require no assumptions regarding the statistical distribution (e.g., normal or lognormal) for the underlying population.

Using a computer, the bootstrap method randomly samples n values with replacement from the original set of n random observations. For each bootstrap sample, the mean (or some other statistic) is calculated. This process of "resampling" is repeated hundreds or perhaps thousands of times and the multiple estimates of the mean are used to define the confidence limits on the mean. The jackknife approximates the bootstrap. Rather than resampling randomly from the entire sample like the bootstrap does, the jackknife takes the entire sample except for one value, and then calculates the statistic of interest. It repeats the process, each time leaving out a different value, and each time recalculating the test statistic.

Both the bootstrap and the jackknife methods require a great deal of computer power, and, historically have not been widely adopted by environmental statisticians (Singh, et al. 1997). However, with advances in computer power and availability of software, computationally intensive statistical procedures have become more practical and accessible. Users of this guidance interested in applying a "resampling" method such as the bootstrap or jackknife should check the capabilities of available software packages and consult with a professional statistician on the correct use and application of the procedures.

Nonparametric Confidence Limits: If the data are not assumed to follow a particular distribution, then it may not be possible to calculate a UCL on the mean using normal theory techniques. If, however, the data are non-normal but approximately *symmetric*, a nonparametric UCL on the *median* (or the 50th percentile) may serve as a reasonable alternative to calculation of a parametric UCL on the mean. *One severe limitation of this approach is that it involves changing the parameter of interest (as determined in the DQO Process) from the mean to the median, potentially biasing the result if the distribution of the data is not symmetric.* Accordingly, the procedure should be used with caution.

Lookup tables can be used to determine the confidence limits on the median (50th percentile). For example, see Conover (1999, Table A3) or Gilbert (1987, Table A14). In general, when the sample size is very small (e.g., less than about nine or ten samples) and the required level of confidence is high (e.g., 95 to 99 percent), the tables will designate the maximum value in the data set as the upper confidence limit. Conover (1999, page 143) gives a large sample approximation for a confidence interval on a proportion (quantile). Methods also are given in Gilbert (1987, page 173), Hahn and Meeker (1991, page 83), and USEPA (1992i, page 5-30).

EPAPAV0054491

F.3 Tests for a Proportion or Percentile

Some RCRA standards represent concentrations that should rarely or never be exceeded for the waste or media to comply with the standard. To measure compliance with such a standard, a waste handler may want to know with some specified level of confidence that a high proportion of the waste complies with the standard (or conversely, that at most only a small proportion of all possible samples could exceed the standard). Two approaches are given for measuring compliance with such a standard:

1. Under the assumption of a normal distribution, use a parametric UCL on a percentile to demonstrate that the true pth percentile (x_p) concentration in the set of all possible samples is less than the concentration standard. The method is given below in **Section F.3.1**.

2. By far, the simplest method for testing proportions is to use an "exceedance rule" in which the proportion of the population with concentrations less than the standard can be estimated based on the total number of sample values and the number of those (if any) that exceed the standard. The exceedance rule method is given below in **Section F.3.2**.

If the number of samples is relatively large, then a "one-sample proportion test" also can be used to test a proportion against a fixed standard. The one-sample proportion test is described in Section 3.2.2.1 in *Guidance for Data Quality Assessment, EPA QA/G-9 (QA00 Update)* (USEPA 2000d).

F.3.1 Parametric Upper Confidence Limits for an Upper Percentile

If the study objective is to demonstrate that the true pth percentile (x_p) concentration in the set of all possible samples (of a given sample support) is less than the applicable standard or Action Level, then a UCL on the upper percentile can be used to determine attainment of the standard.

Requirements and Assumptions

The formulas for constructing parametric UCL on an upper percentile assume that the data are at least approximately normally distributed. Therefore, such a limit should be constructed only if the data pass a test of normality. If the data are best fit by a lognormal distribution instead, the observations should first be transformed to the log-scale. Unlike confidence limits for a lognormal mean, no special equations are required to construct similar limits on an upper percentile. The same formula used when the data are normally distributed can be applied to the log-scale data. The only additional step is that the confidence interval limits must be re-exponentiated before comparing them against the regulatory standard.

It is strongly recommended that a confidence limit not be constructed with less than four measurements, and preferably more (the actual number, however, should be determined during Step Seven of the DQO Process). There are three reasons for this: (1) the formula for a normal-based confidence interval on an upper percentile involves calculation of the sample standard deviation, s, which is used as an estimate of the underlying population standard deviation. This estimate may not be accurate when fewer than four samples are used. (2) The confidence interval formula also involves a special factor κ ("kappa"), which depends on both

EPAPAV0054492

the desired confidence level ($1-\alpha$) and the number of samples, n, used in the calculation. When n is quite small, the κ factor is more extreme, leading to a much wider confidence interval than would be expected with a larger n. For example, at a confidence level of 90 percent, the appropriate κ factor for an upper one-sided limit on the 99th percentile is κ = 18.50 when n = 2, κ = 5.438 when n = 4, and κ = 3.783 when n = 8. (3) The third reason is that the power of the test for normality or lognormality is very low with a small number of samples.

Procedure

Step 1. First test the data for normality on the original scale. If a test of normality is passed, calculate the limit on the raw measurements. If the data violate the assumption of normality, but pass a test of lognormality, calculate the limit using the log-scale data.

Step 2. If the data are normal, compute the mean and standard deviation of the raw data. If the data are consistent with lognormality instead, compute the mean and standard deviation after first transforming the data to the log-scale.

Step 3. Given the percentile (p) being estimated, the sample size (n), and the desired confidence level ($1-\alpha$), use Table G-2 (in Appendix G) to determine the κ factor(s) needed to construct the appropriate UCL. A one-sided upper confidence bound is then computed with the formula

$$UL_{1-\alpha}(x_p) = \bar{x} + s \cdot \kappa_{1-\alpha,p} \qquad \textbf{Equation F.6}$$

where $\kappa_{1-\alpha,p}$ is the upper $1-\alpha$ factor for the pth percentile with n sample measurements.

Again, if the data are lognormal instead of normal, the same formula would be used but with the log-scale mean and standard deviation substituted for the raw-scale values. Then the limit must be exponentiated to get the final upper confidence bound, as in the following formula for an upper bound with $(1-\alpha)100\%$ confidence:

$$UL_{1-\alpha}(x_p) = \exp\left[\bar{y} + s_y \cdot \kappa_{1-\alpha,p}\right] \qquad \textbf{Equation F.7}$$

Step 4. Compare the upper $(1-\alpha)100\%$ confidence bound against the fixed standard. If the upper limit exceeds the standard, then the standard is not met.

An example calculation of the UCL on a percentile is given in Box F.4.

EPAPAV0054493

Box F.4. Example Calculation of a UCL on an Upper Percentile To Classify a Solid Waste

A secondary lead smelter produces a slag that under some operating conditions exhibits the Toxicity Characteristic (TC) for lead. The facility owner needs to classify a batch of waste as either hazardous or nonhazardous at the point of waste generation. During the planning process, the owner determined based on previous sampling studies that the constituent of interest is lead, TCLP results for lead tend to exhibit a normal distribution, and a sample size of ten 200-gram samples (not including QC samples) should satisfy the study objectives. The TC regulatory level for lead is 5 mg/L. The owner wants to determine, with 90-percent confidence, whether a large proportion (e.g., at least 95 percent) of all possible samples of the waste will be below the regulatory limit.

At the point of waste generation, the facility representative takes a series of systematic samples of the waste. The following sample analysis results were generated for ten samples analyzed for lead via the TCLP and SW-846 Method 6010B: <0.5, 0.55, 0.60, 0.80, 0.90, 1.00, 1.50, 1.80, 2.00, and 3.00 mg/L.

Calculate a 90-percent upper confidence limit on the 95th percentile.

Solution

Step 1. Based on the shape of the histogram and normal probability plot, the data were judged to exhibit a normal distribution. Therefore, we proceed with the calculation on the original (untransformed) scale.

Step 2. One value (10% of the measurements) is reported below the quantitation limit of 0.5 mg/L so we replace that value with half the quantitation limit (0.25 mg/L) (see also Section F.4). The mean and standard deviation of the data set are then calculated as $\bar{x} = 124$ mg/L and $s = 0836$.

Step 3. Use Table G-2 (in Appendix G) to determine the κ factor for n = 10 needed to construct a 90-percent UCL on the 95th percentile. The table indicates $\kappa = 2568$. Plug $\bar{x}$, s , and κ into Equation F.6, as follows:

$$UL_{0.90}(x_{095}) = 124 + (0.836)(2.568) = 3.39 \approx 3.4 \text{mg / L}$$

Step 4. All of the sample analysis results are less than the TC regulatory limit of 5 mg/L TCLP for lead, and the owner concludes that the waste is a nonhazardous waste under RCRA. The owner also can conclude with at least 90-percent confidence that at least 95 percent of all possible sample analysis results representing the batch of waste in the roll-off bin are nonhazardous.

F.3.2 Using a Simple Exceedance Rule Method for Determining Compliance With A Fixed Standard

Some RCRA standards represent concentration limits that should never or rarely be exceeded or waste properties that should never or rarely be exhibited for the waste to comply with the standard. One of the simplest nonparametric methods for determining compliance with such a standard is to use an "exceedance rule" (USEPA 1989a). To apply this method, simply require that a number of samples be acquired and that zero or a small number (e.g., one) of the concentration measurements be allowed to exceed the standard. This kind of rule is easy to implement and evaluate once the data are collected. It only requires specification of a number of samples and the number of exceedances allowed (usually zero, for example, for compliance with the LDR concentration level treatment standards). Alternately, one can specify the statistical performance criteria in advance and then determine the number of samples required.

EPAPAV0054494

Requirements and Assumptions for Use of an Exceedance Rule

The method given here is a simple nonparametric method and requires only the ability to identify the number of samples in the data set and whether each sample analysis result complies with the applicable standard or does not comply with the standard. Unfortunately, this ease of use comes with a price. Compared to parametric methods that assume underlying normality or lognormality of the data, the nonparametric method given here requires significantly more samples to achieve the same level of confidence.

Procedure

Step 1: Specify the degree of confidence desired, $100(1-\alpha)\%$, and the proportion (p) of the population that must comply with the standard.

Step 2: If the decision rule permits no exceedance of the standard for any single sample in a set of samples, then obtain and analyze the number of samples (n) indicated in Table G-3a in Appendix G.

If the decision rule permits a single exceedance of the standard in a set of samples, then obtain and analyze the number of samples (n) indicated in Table G-3b in Appendix G.

Step 3: Based on the number of samples obtained and the statistical performance required, determine whether the applicable standard has been attained.

An example application of the exceedance rule is Box F.5.

Box F.5: Example Application of a Simple Exceedance Rule

A facility has treated nonwastewater F003 solvent waste containing carbon disulfide to attain the LDR UTS. Samples of the treatment residue are obtained systematically as the waste treatment is completed. The treater wants to have at least 90% confidence that at least 90% of the batch of treated waste attains the standard. To comply with the LDR regulations, no samples can exceed the UTS. TCLP analyses for carbon disulfide in the treated waste are required to measure compliance with the treatment standard of 4.8 mg/L TCLP.

From **Table G-3a** we find that for a confidence level ($1-\alpha$) of .90 (or 90%) and a proportion of .90, at least 22 samples are required. All sample analysis results must be less than or equal to the UTS of 4.8 mg/L TCLP for the statistical performance criteria to be achieved.

If only 9 samples are obtained (with all sample analysis results less than or equal to the standard), what level of confidence can the treater have that at least 90-percent (or p = 0.90) of all possible samples drawn from the waste meet the treatment standard?

From **Table G-3a** we find for p = 0.90 and n = 9, $1-\alpha$ = 0.60. Therefore, the $100(1-\alpha)\%$ confidence level equals only 60 percent.

EPAPAV0054495

F.4 Treatment of Nondetects in Statistical Tests

Data generated from chemical analysis may fall below a limit of detection of the analytical procedure. These measurement data generally are described as "nondetects", (rather than as zero or not present) and the appropriate limit of detection - such as a quantitation limit - usually is reported. Data sets that include both detected and nondetected results are called "censored" data in the statistical literature.

If a relatively small proportion of the data are reported below detection limit values, replacing the nondetects with a small number (between zero and the detection limit) and proceeding with the usual analysis may be satisfactory. For moderate amounts of data below the detection limit, a more detailed adjustment is appropriate. In situations in which relatively large amounts of data below the detection limit exist, one may need only to consider whether the chemical was detected as above some level or not.

F.4.1 Recommendations

If no more than approximately 15 percent of the sample analysis results are nondetect for a given constituent, then the results of parametric statistical tests will not be substantially affected if nondetects are replaced by half their detection limits (USEPA 1992b).[2] When more than approximately 15 percent of the samples are nondetect, however, the handling of nondetects is more crucial to the outcome of statistical procedures. Indeed, simple substitution methods tend to perform poorly in statistical tests when the nondetect percentage is substantial (Gilliom and Helsel 1986). If the percentage of nondetects is between approximately 15 percent and 50 percent, we recommend use of Cohen's Adjustment (see method below).

The conditions for use of Cohen's method, however, are limited (see method given below) and numerous alternative techniques for imputing left-censored data should be considered if the conditions for use of Cohen's method do not apply. Other methods available include iterative techniques, regression on order statistics (ROS) methods, bias-corrected maximum likelihood estimator (MLE), restricted MLE, modified probability plotting, Winsorization, and lognormalized statistics (EPA Delta log). A modified probability plotting method called Helsel's Robust Method (Helsel 1990) is a popular method that should be considered. Most of the above methods can be performed using publicly available software entitled UnCensor© v. 4.0 (Newman et al. 1995). Although EPA's Office of Solid Waste has not reviewed or tested this software, users of this guidance may be interested in investigating its use.

If the percentage of nondetects is greater than 50 percent, then the regression on order statistics method or Helsel's Robust Method should be considered. As an alternative, EPA's *Guidance for Data Quality Assessment EPA QA/G-9* (USEPA 2000d) suggests the use of a test for proportions when the percentage of nondetects is in the range of greater than 50 percent to 90 percent.

This guidance does not advocate a specific method for imputing or replacing values that lie

[2] Additional experience and research for EPA supporting development of guidance on the statistical analysis of ground-water monitoring data indicates that if the percentage of nondetects is as high as 20 to 25 percent, the results of parametric statistical tests may not be substantially affected if the nondetects are replaced with half their detection limits (Cameron 1999).

EPAPAV0054496

below the limit of detection, however, whichever method is selected should be adequately supported. Table F-3 provides a summary of approaches for handling nondetects in statistical intervals.

Table F-3. Guidance for Handling Nondetects In Statistical Intervals

Percentage of Data Reported as "Nondetect"	*Recommended Treatment of Data Set*
< 15%	Replace nondetects with DL/2
15% to 50%	Cohen's adjustment, regression order statistics, or Helsel's Robust Method
> 50%	Regression on order statistics, Helsel's Robust Method, or a test for proportions

Even with a small proportion of nondetects, care should be taken when choosing which value should be used as the "detection limit". There are important differences between the method detection limit and the quantitation limit (QL) in characterizing "nondetect" concentrations. Many nondetects are characterized by analytical laboratories with one of three data qualifier flags: "U," "J," or "E." Samples with a "U" data qualifier represent "undetected" measurements, meaning that the signal characteristic of that analyte could not be observed or distinguished from "background noise" during lab analysis. Inorganic samples with an "E" flag and organic samples with a "J" flag may or may not be reported with an estimated concentration. If no concentration estimate is reported, these samples represent "detected but not quantified" measurements. In this case, the actual concentration is assumed to be positive, falling somewhere between zero and the QL. Because the actual concentration is unknown, the suggested substitution for parametric statistical procedures is to replace each nondetect qualified with an "E" or "J" with one-half the QL. Note, however, that "E" and "J" samples reported *with* estimated concentrations should be treated, for statistical purposes, as valid measurements. In other words, substitution of one-half the QL is *not recommended* for samples for which an estimated concentration is provided.

As a general rule, nondetect concentrations should not be assumed to be bounded above by the MDL. The MDL is usually estimated on the basis of ideal laboratory conditions with analyte samples that may or may not account for matrix or other interferences encountered when analyzing specific, actual field samples. For this reason, the QL typically should be taken as the most reasonable upper bound for nondetects when imputing specific concentration values to these measurements.

If a constituent is reported only as "not detected" and a detection limit is not provided, then review the raw data package to determine if a detection limit was provided. If not, identify the analytical method used and consult a qualified chemist for guidance on an appropriate QL.

F.4.2 Cohen's Adjustment

If a confidence limit is used to compare waste concentrations to a fixed standard, and a significant fraction of the observed measurements in the data set are reported as nondetects, simple substitution techniques (such as putting in half the detection limit for each nondetect) can lead to biased estimates of the mean or standard deviation and inaccurate confidence limits.

EPAPAV0054497

By using the detection limit and the pattern seen in the detected values, Cohen's method (Cohen 1959) attempts to reconstruct the key features of the original population, providing explicit estimates of the population mean and standard deviation. These, in turn, can be used to calculate confidence intervals, where Cohen's adjusted estimates are used as replacements for the sample mean and sample standard deviation.

Requirements and Assumptions

Cohen's Adjustment assumes that the common underlying population is normal. As such, the technique should only be used when the observed sample data approximately fit a normal model. Because the presence of a large fraction of nondetects will make explicit normality testing difficult, if not impossible, the most helpful diagnostic aid may be to construct a censored probability plot on the detected measurements. If the censored probability plot is clearly linear on the original measurement scale but not on the log-scale, assume normality for purposes of computing Cohen's Adjustment. If, however, the censored probability plot is clearly linear on the log-scale, but not on the original scale, assume the common underlying population is lognormal instead; then compute Cohen's Adjustment to the estimated mean and standard deviation on the log-scale measurements and construct the desired statistical interval using the algorithm for lognormally-distributed observations (see also Gilbert 1987, page 182).

When more than 50 percent of the observations are nondetect, the accuracy of Cohen's method breaks down substantially, getting worse as the percentage of nondetects increases. Because of this drawback, EPA does not recommend the use of Cohen's adjustment when more than half the data are nondetect. In such circumstances, one should consider an alternate statistical method (see Section F.4.1).

One other requirement of Cohen's method is that there be just a single censoring point. As discussed previously, data sets with multiple detection or quantitation limits may require a more sophisticated treatment.

Procedure

Step 1. Divide the data set into two groups: detects and nondetects. If the total sample size equals n, let m represent the number of detects and $(n - m)$ represent the number of nondetects. Denote the ith detected measurement by x_i, then compute the mean and sample variance of the group of detects (i.e., above the quantitation limit data) using the following formulas:

$$\bar{x}_d = \frac{1}{m}\sum_{i=1}^{m} x_i \qquad \textbf{Equation F.8}$$

and

$$s_d^2 = \frac{1}{m-1}\left[\sum_{i=1}^{m} x_i^2 - m\bar{x}_d^2\right] \qquad \textbf{Equation F.9}$$

Step 2. Denote the single censoring point (e.g., the quantitation limit) by QL. Then compute the two intermediate quantities, h and γ, necessary to derive Cohen's adjustment via the following equations:

$$h = (n - m)/n \qquad \textbf{Equation F.10}$$

and

$$\gamma = -s_d^2/(\bar{x}_d - QL)^2 \qquad \textbf{Equation F.11}$$

Step 3. Use the intermediate quantities, h and γ to determine Cohen's adjustment parameter $\lambda^{\$}$ from Table G-7 in Appendix G. For example, if h = 0.4 and γ = 0.30, then $\lambda^{\$}$ = 0.6713.

Step 4. Using the adjustment parameter $\lambda^{\$}$ found in step 3, compute adjusted estimates of the mean and standard deviation with the following formulas:

$$\bar{x} = \bar{x}_d - \lambda^{\$}(\bar{x}_d - QL) \qquad \textbf{Equation F.12}$$

and

$$s = \sqrt{s_d^2 + \lambda^{\$}(\bar{x}_d - QL)^2} \qquad \textbf{Equation F.13}$$

Step 5. Once the adjusted estimates for the population mean and standard deviation are derived, these values can be substituted for the sample mean and standard deviation in formulas for the desired confidence limit.

An example calculation using Cohen's method is given in Box F.6.

EPAPAV0054499

Box F.6. An Example of Cohen's Method

To determine attainment of a cleanup standard at SWMU, 24 random soil samples were obtained and analyzed for pentachlorophenol. Eight of the 24 values (33%) were below the matrix/laboratory-specific quantitation limit of 1 mg/L. The 24 values are <1.0, <1.0, <1.0, <1.0, <1.0, <1.0, <1.0, <1.0, 1.1, 1.5, 1.9, 2.0, 2.5, 2.6, 3.1, 3.3, 3.2, 3.2, 3.3, 3.4, 3.5, 3.8, 4.5, 5.8 mg/L. Cohen's Method will be used to adjust the sample mean and standard deviation for use in constructing a UCL on the mean to determine if the cleanup has attained the site-specific risk-based cleanup standard of 5.0 mg/kg.

Solution

Step 1: The sample mean of the m = 16 values greater than the quantitation limit is $\bar{x}_d$ = 3.044

Step 2: The sample variance of the 16 quantified values is s_d^2 = 1.325.

Step 3: h = (24 - 16) / 24 = 0.333 and γ = 1.325 / (3.044 - 1.0)^2 = 0.317

Step 4: Table G-7 of Appendix G was used for h = 0.333 and γ = 0.317 to find the value of $\lambda^{\$}$. Since the table does not contain these entries exactly, double linear interpolation was used to estimate $\lambda^{\$}$ = 0.5223.

Step 5: The adjusted sample mean and standard deviation are then estimated as follows:

$\bar{x}$ = 3.044 - 0.5223 (3.044 - 1.0) = 1.976 ≈ 2.0 and

$$s = +\sqrt{1325 \quad 0.5223(3.044 - 10)^2} = 1873 \approx 19$$

This page intentionally left blank

EPAPAV0054501

APPENDIX G

STATISTICAL TABLES

Table G-1. Critical Values of Student's t Distribution (One-Tailed)

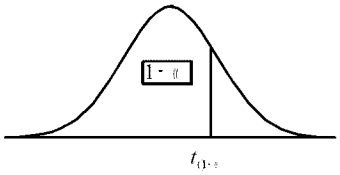

Degrees of Freedom (see note)	*t values for (1 - α) or (1 - β)*								
	0.70	***0.75***	***0.80***	***0.85***	***0.90***	***0.95***	***0.975***	***0.99***	***0.995***
1	0.727	1.000	1.376	1.963	3.078	6.314	12.706	31.821	63.657
2	0.617	0.816	1.061	1.386	1.886	2.920	4.303	6.965	9.925
3	0.584	0.765	0.978	1.250	1.638	2.353	3.182	4.541	5.841
4	0.569	0.741	0.941	1.190	1.533	2.132	2.776	3.747	4.604
5	0.559	0.727	0.920	1.156	1.476	2.015	2.571	3.365	4.032
6	0.553	0.718	0.906	1.134	1.440	1.943	2.447	3.143	3.707
7	0.549	0.711	0.896	1.119	1.415	1.895	2.365	2.998	3.499
8	0.546	0.706	0.889	1.108	1.397	1.860	2.306	2.896	3.355
9	0.543	0.703	0.883	1.100	1.383	1.833	2.262	2.821	3.250
10	0.542	0.700	0.879	1.093	1.372	1.812	2.228	2.764	3.169
11	0.540	0.697	0.876	1.088	1.363	1.796	2.201	2.718	3.106
12	0.539	0.695	0.873	1.083	1.356	1.782	2.179	2.681	3.055
13	0.538	0.694	0.870	1.079	1.350	1.771	2.160	2.650	3.012
14	0.537	0.692	0.868	1.076	1.345	1.761	2.145	2.624	2.977
15	0.536	0.691	0.866	1.074	1.340	1.753	2.131	2.602	2.947
16	0.535	0.690	0.865	1.071	1.337	1.746	2.120	2.583	2.921
17	0.534	0.689	0.863	1.069	1.333	1.740	2.110	2.567	2.898
18	0.534	0.688	0.862	1.067	1.330	1.734	2.101	2.552	2.878
19	0.533	0.688	0.861	1.066	1.328	1.729	2.093	2.539	2.861
20	0.533	0.687	0.860	1.064	1.325	1.725	2.086	2.528	2.845
21	0.532	0.686	0.859	1.063	1.323	1.721	2.080	2.518	2.831
22	0.532	0.686	0.858	1.061	1.321	1.717	2.074	2.508	2.819
23	0.532	0.685	0.858	1.060	1.319	1.714	2.069	2.500	2.807
24	0.531	0.685	0.857	1.059	1.318	1.711	2.064	2.492	2.797
25	0.531	0.684	0.856	1.058	1.316	1.708	2.060	2.485	2.787
26	0.531	0.684	0.856	1.058	1.315	1.706	2.056	2.479	2.779
27	0.531	0.684	0.855	1.057	1.314	1.703	2.052	2.473	2.771
28	0.530	0.683	0.855	1.056	1.313	1.701	2.048	2.467	2.763
29	0.530	0.683	0.854	1.055	1.311	1.699	2.045	2.462	2.756
30	0.530	0.683	0.854	1.055	1.310	1.697	2.042	2.457	2.750
40	0.529	0.681	0.851	1.050	1.303	1.684	2.021	2.423	2.704
60	0.527	0.679	0.848	1.046	1.296	1.671	2.000	2.390	2.660
120	0.526	0.677	0.845	1.041	1.289	1.658	1.980	2.358	2.617
∞	0.524	0.674	0.842	1.036	1.282	1.645	1.960	2.326	2.576

Note: For simple random or systematic sampling, degrees of freedom (df) are equal to the number of samples (n) collected from a solid waste and analyzed, less one (in other words, $df = n - 1$). If stratified random sampling is used, calculate df using Equation 12 or 14 in Section 5.4.2.2.

The last row of the table (∞ degrees of freedom) gives the critical values for a standard normal distribution (z). For example, the z value for $1 - \alpha$ where $\alpha = 0.10$ is found in the last row as 1.282.

EPAPAV0054502

Table G-2. Factors (K) for Parametric Upper Confidence Bounds on Upper Percentiles (p)

n	p = 0.80					p = 0.90				
1 - α	**0.800**	**0.900**	**0.950**	**0.975**	**0.990**	**0.800**	**0.900**	**0.950**	**0.975**	**0.990**
2	3.417	6.987	14.051	28.140	70.376	5.049	10.253	20.581	41.201	103.029
3	2.016	3.039	4.424	6.343	10.111	2.871	4.258	6.155	8.797	13.995
4	1.675	2.295	3.026	3.915	5.417	2.372	3.188	4.162	5.354	7.380
5	1.514	1.976	2.483	3.058	3.958	2.145	2.742	3.407	4.166	5.362
6	1.417	1.795	2.191	2.621	3.262	2.012	2.494	3.006	3.568	4.411
7	1.352	1.676	2.005	2.353	2.854	1.923	2.333	2.755	3.206	3.859
8	1.304	1.590	1.875	2.170	2.584	1.859	2.219	2.582	2.960	3.497
9	1.266	1.525	1.779	2.036	2.391	1.809	2.133	2.454	2.783	3.240
10	1.237	1.474	1.703	1.933	2.246	1.770	2.066	2.355	2.647	3.048
11	1.212	1.433	1.643	1.851	2.131	1.738	2.011	2.275	2.540	2.898
12	1.192	1.398	1.593	1.784	2.039	1.711	1.966	2.210	2.452	2.777
13	1.174	1.368	1.551	1.728	1.963	1.689	1.928	2.155	2.379	2.677
14	1.159	1.343	1.514	1.681	1.898	1.669	1.895	2.109	2.317	2.593
15	1.145	1.321	1.483	1.639	1.843	1.652	1.867	2.068	2.264	2.521
16	1.133	1.301	1.455	1.603	1.795	1.637	1.842	2.033	2.218	2.459
17	1.123	1.284	1.431	1.572	1.753	1.623	1.819	2.002	2.177	2.405
18	1.113	1.268	1.409	1.543	1.716	1.611	1.800	1.974	2.141	2.357
19	1.104	1.254	1.389	1.518	1.682	1.600	1.782	1.949	2.108	2.314
20	1.096	1.241	1.371	1.495	1.652	1.590	1.765	1.926	2.079	2.276
21	1.089	1.229	1.355	1.474	1.625	1.581	1.750	1.905	2.053	2.241
22	1.082	1.218	1.340	1.455	1.600	1.572	1.737	1.886	2.028	2.209
23	1.076	1.208	1.326	1.437	1.577	1.564	1.724	1.869	2.006	2.180
24	1.070	1.199	1.313	1.421	1.556	1.557	1.712	1.853	1.985	2.154
25	1.065	1.190	1.302	1.406	1.537	1.550	1.702	1.838	1.966	2.129
26	1.060	1.182	1.291	1.392	1.519	1.544	1.691	1.824	1.949	2.106
27	1.055	1.174	1.280	1.379	1.502	1.538	1.682	1.811	1.932	2.085
28	1.051	1.167	1.271	1.367	1.486	1.533	1.673	1.799	1.917	2.065
29	1.047	1.160	1.262	1.355	1.472	1.528	1.665	1.788	1.903	2.047
30	1.043	1.154	1.253	1.344	1.458	1.523	1.657	1.777	1.889	2.030
31	1.039	1.148	1.245	1.334	1.445	1.518	1.650	1.767	1.877	2.014
32	1.035	1.143	1.237	1.325	1.433	1.514	1.643	1.758	1.865	1.998
33	1.032	1.137	1.230	1.316	1.422	1.510	1.636	1.749	1.853	1.984
34	1.029	1.132	1.223	1.307	1.411	1.506	1.630	1.740	1.843	1.970
35	1.026	1.127	1.217	1.299	1.400	1.502	1.624	1.732	1.833	1.957
36	1.023	1.123	1.211	1.291	1.391	1.498	1.618	1.725	1.823	1.945
37	1.020	1.118	1.205	1.284	1.381	1.495	1.613	1.717	1.814	1.934
38	1.017	1.114	1.199	1.277	1.372	1.492	1.608	1.710	1.805	1.922
39	1.015	1.110	1.194	1.270	1.364	1.489	1.603	1.704	1.797	1.912
40	1.013	1.106	1.188	1.263	1.356	1.486	1.598	1.697	1.789	1.902
41	1.010	1.103	1.183	1.257	1.348	1.483	1.593	1.691	1.781	1.892
42	1.008	1.099	1.179	1.251	1.341	1.480	1.589	1.685	1.774	1.883
43	1.006	1.096	1.174	1.246	1.333	1.477	1.585	1.680	1.767	1.874
44	1.004	1.092	1.170	1.240	1.327	1.475	1.581	1.674	1.760	1.865
45	1.002	1.089	1.165	1.235	1.320	1.472	1.577	1.669	1.753	1.857
46	1.000	1.086	1.161	1.230	1.314	1.470	1.573	1.664	1.747	1.849
47	0.998	1.083	1.157	1.225	1.308	1.468	1.570	1.659	1.741	1.842
48	0.996	1.080	1.154	1.220	1.302	1.465	1.566	1.654	1.735	1.835
49	0.994	1.078	1.150	1.216	1.296	1.463	1.563	1.650	1.730	1.828
50	0.993	1.075	1.146	1.211	1.291	1.461	1.559	1.646	1.724	1.821
55	0.985	1.063	1.130	1.191	1.266	1.452	1.545	1.626	1.700	1.790
60	0.978	1.052	1.116	1.174	1.245	1.444	1.532	1.609	1.679	1.764
65	0.972	1.043	1.104	1.159	1.226	1.437	1.521	1.594	1.661	1.741
70	0.967	1.035	1.094	1.146	1.210	1.430	1.511	1.581	1.645	1.722
75	0.963	1.028	1.084	1.135	1.196	1.425	1.503	1.570	1.630	1.704
80	0.959	1.022	1.076	1.124	1.183	1.420	1.495	1.559	1.618	1.688
85	0.955	1.016	1.068	1.115	1.171	1.415	1.488	1.550	1.606	1.674
90	0.951	1.011	1.061	1.106	1.161	1.411	1.481	1.542	1.596	1.661
95	0.948	1.006	1.055	1.098	1.151	1.408	1.475	1.534	1.586	1.650
100	0.945	1.001	1.049	1.091	1.142	1.404	1.470	1.527	1.578	1.639

EPAPAV0054503

Table G-2. Factors (K) for Parametric Upper Confidence Bounds on Upper Percentiles (p) (continued)

n	p = 0.95					p = 0.99				
$1-\alpha$	**0.800**	**0.900**	**0.950**	**0.975**	**0.990**	**0.800**	**0.900**	**0.950**	**0.975**	**0.990**
2	6.464	13.090	26.260	52.559	131.426	9.156	18.500	37.094	74.234	185.617
3	3.604	5.311	7.656	10.927	17.370	5.010	7.340	10.553	15.043	23.896
4	2.968	3.957	5.144	6.602	9.083	4.110	5.438	7.042	9.018	12.387
5	2.683	3.400	4.203	5.124	6.578	3.711	4.666	5.741	6.980	8.939
6	2.517	3.092	3.708	4.385	5.406	3.482	4.243	5.062	5.967	7.335
7	2.407	2.894	3.399	3.940	4.728	3.331	3.972	4.642	5.361	6.412
8	2.328	2.754	3.187	3.640	4.285	3.224	3.783	4.354	4.954	5.812
9	2.268	2.650	3.031	3.424	3.972	3.142	3.641	4.143	4.662	5.389
10	2.220	2.568	2.911	3.259	3.738	3.078	3.532	3.981	4.440	5.074
11	2.182	2.503	2.815	3.129	3.556	3.026	3.443	3.852	4.265	4.829
12	2.149	2.448	2.736	3.023	3.410	2.982	3.371	3.747	4.124	4.633
13	2.122	2.402	2.671	2.936	3.290	2.946	3.309	3.659	4.006	4.472
14	2.098	2.363	2.614	2.861	3.189	2.914	3.257	3.585	3.907	4.337
15	2.078	2.329	2.566	2.797	3.102	2.887	3.212	3.520	3.822	4.222
16	2.059	2.299	2.524	2.742	3.028	2.863	3.172	3.464	3.749	4.123
17	2.043	2.272	2.486	2.693	2.963	2.841	3.137	3.414	3.684	4.037
18	2.029	2.249	2.453	2.650	2.905	2.822	3.105	3.370	3.627	3.960
19	2.016	2.227	2.423	2.611	2.854	2.804	3.077	3.331	3.575	3.892
20	2.004	2.208	2.396	2.576	2.808	2.789	3.052	3.295	3.529	3.832
21	1.993	2.190	2.371	2.544	2.766	2.774	3.028	3.263	3.487	3.777
22	1.983	2.174	2.349	2.515	2.729	2.761	3.007	3.233	3.449	3.727
23	1.973	2.159	2.328	2.489	2.694	2.749	2.987	3.206	3.414	3.681
24	1.965	2.145	2.309	2.465	2.662	2.738	2.969	3.181	3.382	3.640
25	1.957	2.132	2.292	2.442	2.633	2.727	2.952	3.158	3.353	3.601
26	1.949	2.120	2.275	2.421	2.606	2.718	2.937	3.136	3.325	3.566
27	1.943	2.109	2.260	2.402	2.581	2.708	2.922	3.116	3.300	3.533
28	1.936	2.099	2.246	2.384	2.558	2.700	2.909	3.098	3.276	3.502
29	1.930	2.089	2.232	2.367	2.536	2.692	2.896	3.080	3.254	3.473
30	1.924	2.080	2.220	2.351	2.515	2.684	2.884	3.064	3.233	3.447
31	1.919	2.071	2.208	2.336	2.496	2.677	2.872	3.048	3.213	3.421
32	1.914	2.063	2.197	2.322	2.478	2.671	2.862	3.034	3.195	3.398
33	1.909	2.055	2.186	2.308	2.461	2.664	2.852	3.020	3.178	3.375
34	1.904	2.048	2.176	2.296	2.445	2.658	2.842	3.007	3.161	3.354
35	1.900	2.041	2.167	2.284	2.430	2.652	2.833	2.995	3.145	3.334
36	1.895	2.034	2.158	2.272	2.415	2.647	2.824	2.983	3.131	3.315
37	1.891	2.028	2.149	2.262	2.402	2.642	2.816	2.972	3.116	3.297
38	1.888	2.022	2.141	2.251	2.389	2.637	2.808	2.961	3.103	3.280
39	1.884	2.016	2.133	2.241	2.376	2.632	2.800	2.951	3.090	3.264
40	1.880	2.010	2.125	2.232	2.364	2.627	2.793	2.941	3.078	3.249
41	1.877	2.005	2.118	2.223	2.353	2.623	2.786	2.932	3.066	3.234
42	1.874	2.000	2.111	2.214	2.342	2.619	2.780	2.923	3.055	3.220
43	1.871	1.995	2.105	2.206	2.331	2.615	2.773	2.914	3.044	3.206
44	1.868	1.990	2.098	2.198	2.321	2.611	2.767	2.906	3.034	3.193
45	1.865	1.986	2.092	2.190	2.312	2.607	2.761	2.898	3.024	3.180
46	1.862	1.981	2.086	2.183	2.303	2.604	2.756	2.890	3.014	3.168
47	1.859	1.977	2.081	2.176	2.294	2.600	2.750	2.883	3.005	3.157
48	1.857	1.973	2.075	2.169	2.285	2.597	2.745	2.876	2.996	3.146
49	1.854	1.969	2.070	2.163	2.277	2.594	2.740	2.869	2.988	3.135
50	1.852	1.965	2.065	2.156	2.269	2.590	2.735	2.862	2.980	3.125
55	1.841	1.948	2.042	2.128	2.233	2.576	2.713	2.833	2.943	3.078
60	1.832	1.933	2.022	2.103	2.202	2.564	2.694	2.807	2.911	3.038
65	1.823	1.920	2.005	2.082	2.176	2.554	2.677	2.785	2.883	3.004
70	1.816	1.909	1.990	2.063	2.153	2.544	2.662	2.765	2.859	2.974
75	1.810	1.899	1.976	2.047	2.132	2.536	2.649	2.748	2.838	2.947
80	1.804	1.890	1.964	2.032	2.114	2.528	2.638	2.733	2.819	2.924
85	1.799	1.882	1.954	2.019	2.097	2.522	2.627	2.719	2.802	2.902
90	1.794	1.874	1.944	2.006	2.082	2.516	2.618	2.706	2.786	2.883
95	1.790	1.867	1.935	1.995	2.069	2.510	2.609	2.695	2.772	2.866
100	1.786	1.861	1.927	1.985	2.056	2.505	2.601	2.684	2.759	2.850

EPAPAV0054504

Table G-3a. Sample Size Required to Demonstrate With At Least $100(1-\alpha)\%$ Confidence That At Least $100p\%$ of a Lot or Batch of Waste Complies With the Applicable Standard (No Samples Exceeding the Standard)

p	$1-\alpha$										
	0.50	**0.55**	**0.60**	**0.65**	**0.70**	**0.75**	**0.80**	**0.85**	**0.90**	**0.95**	**0.99**
0.50	1222				2	233457					
0.55	2222				3	334468					
0.60	2223				3	344561					0
0.65	2233				3	445671					1
0.70	2333				4	456791					3
0.75	3344				5	5679				11	17
0.80	4	4	5	5	6	7	8	9	11	14	21
0.85	5	5	6	7	8	9	10	12	15	19	29
0.90	7	8	9	10	12	14	16	19	22	29	44
0.95	14	16	18	21	24	28	32	37	45	59	90
0.99	69	80	92	105	120	138	161	189	230	299	459

Table G-3b. Sample Size Required to Demonstrate With At Least $100(1-\alpha)\%$ Confidence That At Least $100p\%$ of a Lot or Batch of Waste Complies With the Applicable Standard (One Sample Exceeding the Standard)

p	$1-\alpha$										
	0.50	**0.55**	**0.60**	**0.65**	**0.70**	**0.75**	**0.80**	**0.85**	**0.90**	**0.95**	**0.99**
0.50	3444				5	556781					1
0.55	4445				5	667891					2
0.60	4555				6	6789				10	14
0.65	5	5	6	6	7	7	8	9	10	12	16
0.70	6	6	7	7	8	9	9	101	21	42	0
0.75	7	7	8	9	9	10	11	13	15	18	24
0.80	9	9	10	11	12	13	14	16	18	22	31
0.85	11	12	13	15	16	18	19	22	25	30	42
0.90	17	19	20	22	24	27	29	33	38	46	64
0.95	34	37	40	44	49	53	59	67	77	93	130
0.99	168	184	202	222	244	269	299	337	388	473	662

EPAPAV0054505

Table G-4. Coefficients $[a_{n-i+1}]$ for the Shapiro-Wilk Test for Normality

i \ n	23456789								10	
1	.7071	.7071	.6872	.6646	.6431	.6233	.6052	.5888	.5739	
2		.0000	.1677	.2413	.2806	.3031	.3164	.3244	.3291	
3				.0000	.0875	.1401	.1743	.1976	.2141	
4						.0000	.0561	.0947	.1224	
5								.0000	.0399	
i \ n	**11**	**12**	**13**	**14**	**15**	**16**	**17**	**18**	**19**	**20**
1	.5601	.5475	.5359	.5251	.5150	.5056	.4968	.4886	.4808	.4734
2	.3315	.3325	.3325	.3318	.3306	.3290	.3273	.3253	.3232	.3211
3	.2260	.2347	.2412	.2460	.2495	.2521	.2540	.2553	.2561	.2565
4	.1429	.1586	.1707	.1802	.1878	.1939	.1988	.2027	.2059	.2085
5	.0695	.0922	.1099	.1240	.1353	.1447	.1524	.1587	.1641	.1686
6	.0000	.0303	.0539	.0727	.0880	.1005	.1109	.1197	.1271	.1334
7			.0000	.0240	.0433	.0593	.0725	.0837	.0932	.1013
8					.0000	.0196	.0359	.0496	.0612	.0711
9							.0000	.0163	.0303	.0422
10									.0000	.0140
i \ n	**21**	**22**	**23**	**24**	**25**	**26**	**27**	**28**	**29**	**30**
1	.4643	.4590	.4542	.4493	.4450	.4407	.4366	.4328	.4291	.4254
2	.3185	.3156	.3126	.3098	.3069	.3043	.3018	.2992	.2968	.2944
3	.2578	.2571	.2563	.2554	.2543	.2533	.2522	.2510	.2499	.2487
4	.2119	.2131	.2139	.2145	.2148	.2151	.2152	.2151	.2150	.2148
5	.1736	.1764	.1787	.1807	.1822	.1836	.1848	.1857	.1864	.1870
6	.1399	.1443	.1480	.1512	.1539	.1563	.1584	.1601	.1616	.1630
7	.1092	.1150	.1201	.1245	.1283	.1316	.1346	.1372	.1395	.1415
8	.0804	.0878	.0941	.0997	.1046	.1089	.1128	.1162	.1192	.1219
9	.0530	.0618	.0696	.0764	.0823	.0876	.0923	.0965	.1002	.1036
10	.0263	.0368	.0459	.0539	.0610	.0672	.0728	.0778	.0822	.0862
11	.0000	.0122	.0228	.0321	.0403	.0476	.0540	.0598	.0650	.0697
12			.0000	.0107	.0200	.0284	.0358	.0424	.0483	.0537
13					.0000	.0094	.0178	.0253	.0320	.0381
14							.0000	.0084	.0159	.0227
15									.0000	.0076

Source: After Shapiro and Wilk (1965)

EPAPAV0054506

Table G-4. Coefficients $[a_{n-i+1}]$ for the Shapiro-Wilk Test for Normality (Continued)

i \ n	31	32	33	34	35	36	37	38	39	40
1	.4220	.4188	.4156	.4127	.4096	.4068	.4040	.4015	.3989	.3964
2	.2921	.2898	.2876	.2854	.2834	.2813	.2794	.2774	.2755	.2737
3	.2475	.2463	.2451	.2439	.2427	.2415	.2403	.2391	.2380	.2368
4	.2145	.2141	.2137	.2132	.2127	.2121	.2116	.2110	.2104	.2098
5	.1874	.1878	.1880	.1882	.1883	.1883	.1883	.1881	.1880	.1878
6	.1641	.1651	.1660	.1667	.1673	.1678	.1683	.1686	.1689	.1691
7	.1433	.1449	.1463	.1475	.1487	.1496	.1505	.1513	.1520	.1526
8	.1243	.1265	.1284	.1301	.1317	.1331	.1344	.1356	.1366	.1376
9	.1066	.1093	.1118	.1140	.1160	.1179	.1196	.1211	.1225	.1237
10	.0899	.0931	.0961	.0988	.1013	.1036	.1056	.1075	.1092	.1108
11	.0739	.0777	.0812	.0844	.0873	.0900	.0924	.0947	.0967	.0986
12	.0585	.0629	.0669	.0706	.0739	.0770	.0798	.0824	.0848	.0870
13	.0435	.0485	.0530	.0572	.0610	.0645	.0677	.0706	.0733	.0759
14	.0289	.0344	.0395	.0441	.0484	.0523	.0559	.0592	.0622	.0651
15	.0144	.0206	.0262	.0314	.0361	.0404	.0444	.0481	.0515	.0546
16	.0000	.0068	.0131	.0187	.0239	.0287	.0331	.0372	.0409	.0444
17			.0000	.0062	.0119	.0172	.0220	.0264	.0305	.0343
18					.0000	.0057	.0110	.0158	.0203	.0244
19							.0000	.0053	.0101	.0146
20									.0000	.0049

i \ n	41	42	43	44	45	46	47	48	49	50
1	.3940	.3917	.3894	.3872	.3850	.3830	.3808	.3789	.3770	.3751
2	.2719	.2701	.2628	.2667	.2651	.2635	.2620	.2604	.2589	.2574
3	.2357	.2345	.2334	.2323	.2313	.2302	.2291	.2281	.2271	.2260
4	.2091	.2085	.2078	.2072	.2065	.2058	.2052	.2045	.2038	.2032
5	.1876	.1874	.1871	.1868	.1865	.1862	.1859	.1855	.1851	.1847
6	.1693	.1694	.1695	.1695	.1695	.1695	.1695	.1693	.1692	.1691
7	.1531	.1535	.1539	.1542	.1545	.1548	.1550	.1551	.1553	.1554
8	.1384	.1392	.1398	.1405	.1410	.1415	.1420	.1423	.1427	.1430
9	.1249	.1259	.1269	.1278	.1286	.1293	.1300	.1306	.1312	.1317
10	.1123	.1136	.1149	.1160	.1170	.1180	.1189	.1197	.1205	.1212
11	.1004	.1020	.1035	.1049	.1062	.1073	.1085	.1095	.1105	.1113
12	.0891	.0909	.0927	.0943	.0959	.0972	.0986	.0998	.1010	.1020
13	.0782	.0804	.0824	.0842	.0860	.0876	.0892	.0906	.0919	.0932
14	.0677	.0701	.0724	.0745	.0775	.0785	.0801	.0817	.0832	.0846
15	.0575	.0602	.0628	.0651	.0673	.0694	.0713	.0731	.0748	.0764
16	.0476	.0506	.0534	.0560	.0584	.0607	.0628	.0648	.0667	.0685
17	.0379	.0411	.0442	.0471	.0497	.0522	.0546	.0568	.0588	.0608
18	.0283	.0318	.0352	.0383	.0412	.0439	.0465	.0489	.0511	.0532
19	.0188	.0227	.0263	.0296	.0328	.0357	.0385	.0411	.0436	.0459
20	.0094	.0136	.0175	.0211	.0245	.0277	.0307	.0335	.0361	.0386
21	.0000	.0045	.0087	.0126	.0163	.0197	.0229	.0259	.0288	.0314
22			.0000	.0042	.0081	.0118	.0153	.0185	.0215	.0244
23					.0000	.0039	.0076	.0111	.0143	.0174
24							.0000	.0037	.0071	.0104
25									.0000	.0035

EPAPAV0054507

Table G-5. α -Level Critical Points for the Shapiro-Wilk Test

n	α	
	0.01	**0.05**
3	0.753	0.767
4	0.687	0.748
5	0.686	0.762
6	0.713	0.788
7	0.730	0.803
8	0.749	0.818
9	0.764	0.829
10	0.781	0.842
11	0.792	0.850
12	0.805	0.859
13	0.814	0.866
14	0.825	0.874
15	0.835	0.881
16	0.844	0.887
17	0.851	0.892
18	0.858	0.897
19	0.863	0.901
20	0.868	0.905
21	0.873	0.908
22	0.878	0.911
23	0.881	0.914
24	0.884	0.916
25	0.888	0.918
26	0.891	0.920
27	0.894	0.923
28	0.896	0.924
29	0.898	0.926
30	0.900	0.927
31	0.902	0.929
32	0.904	0.930
33	0.906	0.931
34	0.908	0.933
35	0.910	0.934
36	0.912	0.935
37	0.914	0.936
38	0.916	0.938
39	0.917	0.939
40	0.919	0.940
41	0.920	0.941
42	0.922	0.942
43	0.923	0.943
44	0.924	0.944
45	0.926	0.945
46	0.927	0.945
47	0.928	0.946
48	0.929	0.947
49	0.929	0.947
50	0.930	0.947

Source: After Shapiro and Wilk (1965)

EPAPAV0054508

Table G-6. Values of $H_{1-\alpha} = H_{0.90}$ for Calculating a One-Sided 90-Percent UCL on a Lognormal Mean

s_y	n									
	3	5	7	10	12	15	21	31	51	101
0.10	1.686	1.438	1.381	1.349	1.338	1.328	1.317	1.308	1.301	1.295
0.20	1.885	1.522	1.442	1.396	1.380	1.365	1.348	1.335	1.324	1.314
0.30	2.156	1.627	1.517	1.453	1.432	1.411	1.388	1.370	1.354	1.339
0.40	2.521	1.755	1.607	1.523	1.494	1.467	1.437	1.412	1.390	1.371
0.50	2.990	1.907	1.712	1.604	1.567	1.532	1.494	1.462	1.434	1.409
0.60	3.542	2.084	1.834	1.696	1.650	1.606	1.558	1.519	1.485	1.454
0.70	4.136	2.284	1.970	1.800	1.743	1.690	1.631	1.583	1.541	1.504
0.80	4.742	2.503	2.119	1.914	1.845	1.781	1.710	1.654	1.604	1.560
0.90	5.349	2.736	2.280	2.036	1.955	1.880	1.797	1.731	1.672	1.621
1.00	5.955	2.980	2.450	2.167	2.073	1.985	1.889	1.812	1.745	1.686
1.25	7.466	3.617	2.904	2.518	2.391	2.271	2.141	2.036	1.946	1.866
1.50	8.973	4.276	3.383	2.896	2.733	2.581	2.415	2.282	2.166	2.066
1.75	10.48	4.944	3.877	3.289	3.092	2.907	2.705	2.543	2.402	2.279
2.00	11.98	5.619	4.380	3.693	3.461	3.244	3.005	2.814	2.648	2.503
2.50	14.99	6.979	5.401	4.518	4.220	3.938	3.629	3.380	3.163	2.974
3.00	18.00	8.346	6.434	5.359	4.994	4.650	4.270	3.964	3.697	3.463
3.50	21.00	9.717	7.473	6.208	5.778	5.370	4.921	4.559	4.242	3.965
4.00	24.00	11.09	8.516	7.062	6.566	6.097	5.580	5.161	4.796	4.474
4.50	27.01	12.47	9.562	7.919	7.360	6.829	6.243	5.763	5.354	4.989
5.00	30.01	13.84	10.61	8.779	8.155	7.563	6.909	6.379	5.916	5.508
6.00	36.02	16.60	12.71	10.50	9.751	9.037	8.248	7.607	7.048	6.555
7.00	42.02	19.35	14.81	12.23	11.35	10.52	9.592	8.842	8.186	7.607
8.00	48.03	22.11	16.91	13.96	12.96	12.00	10.94	10.08	9.329	8.665
9.00	54.03	24.87	19.02	15.70	14.56	13.48	12.29	11.32	10.48	9.725
10.0	60.04	27.63	21.12	17.43	16.17	14.97	13.64	12.56	11.62	10.79

Source: Land (1975)

EPAPAV0054509

Table G-7. Values of the Parameter $\lambda^{\$}$ for Cohen's Adjustment for Nondetected Values

γ	h											
	.01	.02	.03	.04	.05	.06	.07	.08	.09	.10	.15	.20
.00	.010100	.020400	.030902	.041583	.052507	.063625	.074953	.08649	.09824	.11020	.17342	.24268
.05	.010551	.021294	.032225	.043350	.054670	.066159	.077909	.08983	.10197	.11431	.17925	.25033
.10	.010950	.022082	.033398	.044902	.056596	.068483	.080563	.09285	.10534	.11804	.18479	.25741
.15	.011310	.022798	.034466	.046318	.058356	.070586	.083009	.09563	.10845	.12148	.18985	.26405
.20	.011642	.023459	.035453	.047829	.059990	.072539	.085280	.09822	.11135	.12469	.19460	.27031
.25	.011952	.024076	.036377	.048858	.061522	.074372	.087413	.10065	.11408	.12772	.19910	.27626
.30	.012243	.024658	.037249	.050018	.062969	.076106	.089433	.10295	.11667	.13059	.20338	.28193
.35	.012520	.025211	.038077	.051120	.064345	.077736	.091355	.10515	.11914	.13333	.20747	.28737
.40	.012784	.025738	.038866	.052173	.065660	.079332	.093193	.10725	.12150	.13595	.21129	.29250
.45	.013036	.026243	.039624	.053182	.066921	.080845	.094958	.10926	.12377	.13847	.21517	.29765
.50	.013279	.026728	.040352	.054153	.068135	.082301	.096657	.11121	.12595	.14090	.21882	.30253
.55	.013513	.027196	.041054	.055089	.069306	.083708	.098298	.11208	.12806	.14325	.22225	.30725
.60	.013739	.027849	.041733	.055995	.070439	.085068	.099887	.11490	.13011	.14552	.22578	.31184
.65	.013958	.028087	.042391	.056874	.071538	.086388	.10143	.11666	.13209	.14773	.22910	.31630
.70	.014171	.028513	.043030	.057726	.072505	.087670	.10292	.11837	.13402	.14987	.23234	.32065
.75	.014378	.029927	.043652	.058556	.073643	.088917	.10438	.12004	.13590	.15196	.23550	.32489
.80	.014579	.029330	.044258	.059364	.074655	.090133	.10580	.12167	.13775	.15400	.23858	.32903
.85	.014773	.029723	.044848	.060153	.075642	.091319	.10719	.12225	.13952	.15599	.24158	.33307
.90	.014967	.030107	.045425	.060923	.075606	.092477	.10854	.12480	.14126	.15793	.24452	.33703
.95	.015154	.030483	.045989	.061676	.077549	.093611	.10987	.12632	.14297	.15983	.24740	.34091
1.00	.015338	.030850	.046540	.062413	.078471	.094720	.11116	.12780	.14465	.16170	.25022	.34471

Table G-7. Values of the Parameter $\lambda^{\$}$ for Cohen's Adjustment for Nondetected Values (Continued)

γ	h											
	.25	.30	.35	.40	.45	.50	.55	.60	.65	.70	.80	.90
.05	.32793	.4130	.5066	.6101	.7252	.8540	.9994	1.166	1.358	1.585	2.203	3.314
.10	.33662	.4233	.5184	.6234	.7400	.8703	1.017	1.185	1.379	1.608	2.229	3.345
.15	.34480	.4330	.5296	.6361	.7542	.8860	1.035	1.204	1.400	1.630	2.255	3.376
.20	.35255	.4422	.5403	.6483	.7673	.9012	1.051	1.222	1.419	1.651	2.280	3.405
.25	.35993	.4510	.5506	.6600	.7810	.9158	1.067	1.240	1.439	1.672	2.305	3.435
.30	.36700	.4595	.5604	.6713	.7937	.9300	1.083	1.257	1.457	1.693	2.329	3.464
.35	.37379	.4676	.5699	.6821	.8060	.9437	1.098	1.274	1.475	1.713	2.353	3.492
.40	.38033	.4735	.5791	.6927	.8179	.9570	1.113	1.290	1.494	1.732	2.376	3.520
.45	.38665	.4831	.5880	.7029	.8295	.9700	1.127	1.306	1.511	1.751	2.399	3.547
.50	.39276	.4904	.5967	.7129	.8408	.9826	1.141	1.321	1.528	1.770	2.421	3.575
.55	.39679	.4976	.6061	.7225	.8517	.9950	1.155	1.337	1.545	1.788	2.443	3.601
.60	.40447	.5045	.6133	.7320	.8625	1.007	1.169	1.351	1.561	1.806	2.465	3.628
.65	.41008	.5114	.6213	.7412	.8729	1.019	1.182	1.368	1.577	1.824	2.486	3.654
.70	.41555	.5180	.6291	.7502	.8832	1.030	1.195	1.380	1.593	1.841	2.507	3.679
.75	.42090	.5245	.6367	.7590	.8932	1.042	1.207	1.394	1.608	1.851	2.528	3.705
.80	.42612	.5308	.6441	.7676	.9031	1.053	1.220	1.408	1.624	1.875	2.548	3.730
.85	.43122	.5370	.6515	.7781	.9127	1.064	1.232	1.422	1.639	1.892	2.568	3.754
.90	.43622	.5430	.6586	.7844	.9222	1.074	1.244	1.435	1.653	1.908	2.588	3.779
.95	.44112	.5490	.6656	.7925	.9314	1.085	1.255	1.448	1.668	1.924	2.607	3.803
1.00	.44592	.5548	.6724	.8005	.9406	1.095	1.287	1.461	1.882	1.940	2.626	3.827

EPAPAV0054511

APPENDIX H

STATISTICAL SOFTWARE

Since publication of Chapter Nine ("Sampling Plan") of SW-846 in 1986, great advances have been made in desktop computer hardware and software. In implementing the procedures recommended in this chapter, you should take advantage of the powerful statistical software now available for low cost or no cost. A number of useful "freeware" packages are available from EPA and other organizations, and many are downloadable from the Internet. Commercially available software also may be used.

This appendix provides a list of software that you might find useful. *EPA Guidance for Quality Assurance Project Plans, EPA QA/G-5* (USEPA 1998a) also provides an extensive list of software that can assist you in developing and preparing a quality assurance project plan.

Sampling Design Software	
Title	**Description**
*Decision Error Feasibility Trials (DEFT)**	This software package allows quick generation of cost information about several simple sampling designs based on DQO constraints, which can be evaluated to determine their appropriateness and feasibility before the sampling and analysis design is finalized. This software supports the *Guidance for the Data Quality Objectives Process EPA QA/G-4* (USEPA 2000b), which provides general guidance to organizations developing data quality criteria and performance specifications for decision making. The *Data Quality Objectives Decision Error Feasibility Trials Software (DEFT) - User's Guide* (EPA/240/B-01/007) contains detailed instructions on how to use DEFT software and provides background information on the sampling designs that the software uses. Download from EPA's World Wide Web site at: http://www.epa.gov/quality/qa_docs.html .
*GeoEAS**	*Geostatistical Environmental Assessment Software (GeoEAS)* (USEPA 1991b) is a collection of interactive software tools for performing two-dimensional geostatistical analyses of spatially distributed data. Programs are provided for data file management, data transformations, univariate statistics, variogram analysis, cross-validation, kriging, contour mapping, post plots, and line/scatter plots. Users may alter parameters and re-calculate results or reproduce graphs, providing a "what-if" analysis capability. GeoEAS Version 1.2.1 (April 1989) software and documentation is available from EPA's Web site at http://www.epa.gov/ada/csmos/models/geoeas.html

* Also available on EPA's CD-ROM *Site Characterization Library Volume 1* (Release 2) (USEPA 1998c)

EPAPAV0054512

Sampling Design Software (Continued)	
Title	**Description**
ELIPGRID-PC	*ELIPGRID-PC* is a program for the design and analysis of sampling grids for locating elliptical targets (e.g., contamination "hot spots"). It computes the probability of success in locating targets based on the assumed size, shape, and orientation of the targets, as well as the specified grid spacing. It also can be used to compute a grid spacing from a specified success probability, compute cost information associated with specified sampling grids, determine the size of the smallest "hot spot" detected given a particular grid, and create graphs of the results. Information, software, and user's guide are available on the World Wide Web at: http://dqo.pnl.gov/software/elipgrid.htm The site is operated for the U.S. Department of Energy Office of Environmental Management by the Pacific Northwest National Laboratory.
DQO-PRO	This software comprises a series of programs with a user interface such as a common calculator and it is accessed using Microsoft Windows. *DQO-PRO* provides answers for three objectives: 1. Determining the rate at which an event occurs 2. Determining an estimate of an average within a tolerable error 3. Determining the sampling grid necessary to detect "hot spots." *DQO-PRO* facilitates understanding the significance of DQOs by showing the relationships between numbers of samples and DQO parameters, such as (1) confidence levels versus numbers of false positive or negative conclusions; (2) tolerable error versus analyte concentration, standard deviation, etc., and (3) confidence levels versus sampling area grid size. The user has only to type in his or her requirements and the calculator instantly provides the answers. Contact: Information and software are available on the Internet at the American Chemical Society, Division of Environmental Chemistry Web site at http://www.acs-envchem.duq.edu/dqopro.htm
Visual Sample Plan (VSP)	VSP provides statistical solutions for optimizing the sampling design. The software can answer two important questions in sample planning: (1) How many samples are needed? VSP can quickly calculate the number of samples needed for various scenarios at different costs. (2) Where should the samples be taken? Sample placement based on personal judgment is prone to bias. VSP provides random or grided sampling locations overlaid on the site map. Information and software available at http://dqo.pnl.gov/VSP/Index.htm VSP was developed in part by Department of Energy's (DOE's) National Analytical Management Program (NAMP) and through a joint effort between Pacific Northwest National Laboratory (PNNL) and Advanced Infrastructure Management Technologies (AIMTech).

EPAPAV0054513

Data Quality Assessment Software	
Title	**Description**
DataQUEST	This software tool is designed to provide a quick-and-easy way for managers and analysts to perform baseline Data Quality Assessment. The goal of the system is to allow those not familiar with standard statistical packages to review data and verify assumptions that are important in implementing the DQA Process. This software supports the *Guidance for Data Quality Assessment, EPA QA/G-9* (USEPA 2000d) which demonstrates the use of the DQA Process in evaluating environmental data sets. Download from EPA's World Wide Web site at http://www.epa.gov/quality/qa_docs.html
*ASSESS 1.01a**	This software tool was designed to calculate variances for quality assessment samples in a measurement process. The software performs the following functions: (1) transforming the entire data set, (2) producing scatter plots of the data, (3) displaying error bar graphs that demonstrate the variance, and (4) generating reports of the results and header information. Available on EPA's CD-ROM *Site Characterization Library Volume 1* (Release 2) (USEPA 1998c)
MTCA*Stat*	This software package is published by the Washington Department of Ecology and can be used to calculate sample sizes (for both normal and lognormal distributions), basic statistical quantities, and confidence intervals. Requires MS Excel 97. The USEPA Office of Solid Waste has not evaluated this software for use in connection with RCRA programs, however, users of this guidance may wish to review the software for possible application to some of the concepts described in this document. Available from Washington Department of Ecology's "Site Cleanup, Sediments, and Underground Storage Tanks" World Wide Web site at http://www.ecy.wa.gov/programs/tcp/tools/toolmain.html

* Also available on EPA's CD-ROM *Site Characterization Library Volume 1* (Release 2) (USEPA 1998c)

EPAPAV0054514

This page intentionally left blank

EPAPAV0054515

APPENDIX I

EXAMPLES OF PLANNING, IMPLEMENTATION, AND ASSESSMENT FOR RCRA WASTE SAMPLING

This appendix presents the following two hypothetical examples of planning, implementation, and assessment for RCRA waste sampling:

Example 1: Sampling soil in a RCRA Solid Waste Management Unit (SWMU) to confirm attainment of the cleanup standard (using the mean to measure compliance with a standard)

Example 2: Sampling of a process waste to make a hazardous waste determination (using a maximum or upper percentile to measure compliance with a standard).

Example 1: Sampling Soil at a RCRA SWMU to Confirm Attainment of a Cleanup Standard

Introduction

In this example, the owner of a permitted TSDF completed removal of contaminated soil at a SWMU as required under the facility's RCRA permit under EPA's RCRA Corrective Action Program. The permit required the facility owner to conduct sampling and analysis to determine if the remaining soil attains the facility-specific risk-based standard specified in the permit. This hypothetical example describes how the planning, implementation, and assessment activities were conducted.

Planning Phase

The planning phase included implementation of EPA's systematic planning process known as the Data Quality Objectives (DQO) Process and preparation of a quality assurance project plan (QAPP). A DQO planning team was assembled, and the DQO Process was implemented following EPA's guidance in *Guidance for the Data Quality Objectives Process for Hazardous Waste Site Operations EPA QA/G-4HW* (USEPA 2000a), *Guidance for the Data Quality Objectives Process EPA QA/G-4* (USEPA 2000b), and Chapter Nine of SW-846.

The outputs of the seven steps of the DQO Process are outlined below.

DQO Step 1: Stating the Problem

- The DQO planning team included the facility owner, a technical project manager, a chemist, environmental technician (sampler), and a facility engineer familiar with statistical methods. As part of the DQO Process, the team consulted with their state regulator to determine if the State has any additional regulations or guidance that applies. A state guidance document provided recommendations for the parameter of interest and the acceptable Type I decision error rate.

EPAPAV0054516

- A concise description of the problem was developed as follows: The facility conducted a soil removal action at the SWMU. Soil with concentrations greater than the risk-based cleanup standard of 10 mg/kg of pentachlorophenol (PCP) was excavated for off-site disposal. Removal was guided by the results of grab samples analyzed for PCP using a semi-quantitative field analytical method.

- The conceptual site model (CSM) assumed that the PCP migrated downward into the soil, and that if a soil layer were found to be "clean," then the underlying soil layer also would be assumed "clean."

- The technical staff were given six weeks to complete the study and submit a draft report to the regulatory agency.

DQO Step 2: Identifying Possible Decisions

- Decision statement: The study objective was to determine if the soil remaining in the SWMU after removal of the contaminated soil attained the cleanup standard. If the standard is attained, then the area will be backfilled with clean fill and reserved for future industrial development. If the standard is not attained, then the next layer of soil within the SWMU will be removed.

DQO Step 3: Identifying Inputs to the Decision

- The sample analysis results for total PCP (in mg/kg) in soil were used to decide whether or not the soil attained the cleanup. PCP was designated as the only constituent of concern, and its distribution within the SWMU was assumed to be random. The risk-based cleanup level for PCP in soil was set at 10 mg/kg.

- The decision was based on the concentrations in the top six-inch layer of soil across the entire SWMU. The study was designed to determine whether the entire unit attains the standards, or does not.

- The chemist identified two candidate analytical methods for measuring PCP concentrations in soil: (1) SW-846 Method 4010A "Screening For Pentachlorophenol By Immunoassay" ($20/analysis), and (2) SW-846 Method 8270 (and prep method 3550) ($110/analysis). The project chemist confirmed that both methods were capable of achieving a quantitation limit well below the action level of 10 mg/kg. During Step 7 of the DQO Process, the chemist revisited this step to select a final method and prepare method performance criteria as part of the overall specification of decision performance criteria.

- The planning team identified the need to specify the size, shape, and orientation of each sample to satisfy the acceptable sampling error (specified in DQO Process Step 7) and to enable selection of the appropriate sampling device (during development of the QAPP). Because the soil exists in a relatively flat stationary three-dimensional unit, it was considered a series of overlapping two-dimensional surfaces for the purposes of sampling. The correct orientation, size,

EPAPAV0054517

and shape of each sample was a vertical core capturing the full six-inch thickness of the soil unit. The minimum mass of each primary field sample was determined during DQO Process Step 7 using the particle size-weight relationship required to control fundamental error at an acceptable level.

DQO Step 4: Defining Boundaries

- The dimensions of the SWMU were approximately 125 feet by 80 feet (10,000 square feet). The SWMU was relatively flat. The depth of interest was limited to the top six inches of soil in the unit after removal of the contaminated soil. The spatial boundary of the SWMU was defined by the obvious excavation and by wooden stakes at the corners of the excavation.

- The soil within the study boundary was loamy sand with a maximum particle size of about 1.5 mm (0.15 cm).

- The project team planned to collect samples within a reasonable time frame, and degradation or transformation of the PCP over the investigation period was not a concern.

DQO Step 5: Developing Decision Rules

- The population parameter of interest was the *mean*. The mean was selected as the parameter of interest because the risk-based cleanup standard (Action Level) was derived based upon long-term average health effects predicted from exposures to the contaminated soil.

- The risk-based action level was 10 mg/kg total pentachlorophenol (PCP) in soil.

- The decision rule was then established as follows: "If the mean concentration for PCP in the soil is less than 10 mg/kg, then the cleanup standard is attained. Otherwise, the SWMU will be considered contaminated and additional remedial action will be required."

DQO Step 6: Specifying Limits on Decision Errors

- The major sources of variability (measured as the relative variance) were identified as within-sample unit variability (s_w^2) (including analytical imprecision and Gy's fundamental error) and between-sample unit variability (s_b^2) (or population variability). The total study variance (s_T^2), expressed as the relative variance, was estimated using the following relationship:

$$s_T^2 = s_b^2 + s_w^2$$
$$= s_b^2 + s_s^2 + s_a^2$$

where s_b^2 = between-unit variance (population variance), s_s^2 = sample collection imprecision (estimated by Gy's fundamental error, s_{FE}^2), and s_a^2 = analytical imprecision (determined from the measurement of laboratory control samples with concentrations near the Action Level).

- Sample analysis results for eight samples of soil excavated from the previous lift gave a standard deviation and mean of s = 7.1 and $\overline{x}$ = 10.9 respectively. The total study relative standard deviation (s_T) was then estimated as 0.65.

- The relative standard deviation (RSD) of the sampling error (s_s) was estimated as 0.10 (as estimated by Gy's fundamental error), based a maximum observed particle size of approximately 1.5 mm (0.15 cm) and a sample mass of 10 grams.

- The RSD for the analytical imprecision (s_a) associated with the field screening method (SW-846 Method 4010A - "Screening For Pentachlorophenol By Immunoassay") was estimated from replicate measurements as 0.40.

- The between-unit (population) relative standard deviation (s_b) was then estimated as:

$$s_b = \sqrt{s_T^2 - (s_s^2 + s_a^2)}$$
$$= \sqrt{(.65)^2 - (.10^2 + .40^2)} = 0.50$$

- Two potential decision errors could be made based on interpreting sampling and analytical data:

  Decision Error A: Concluding that the mean PCP concentration within the SWMU was less than 10 mg/kg when it was truly greater than 10 mg/kg, or

  Decision Error B: Concluding that the mean PCP concentration within the SWMU was greater than 10 mg/kg when it was truly less than 10 mg/kg.

The consequences of Decision Error A, incorrectly deciding the SWMU was "clean" (mean PCP concentration less than 10 mg/kg), would leave contaminated soil undetected and would likely increase health risks for onsite workers and pose potential future legal problems for the owner.

The consequences of Decision Error B, incorrectly deciding the SWMU was "not clean" (mean PCP concentration greater than or equal to 10 mg/kg), would cause the needless expenditure of resources (e.g., funding, time, backhoe and operator, soil disposal, sampling crew labor, and analytical capacity) for unnecessary further remedial action.

EPAPAV0054519

Error A, incorrectly deciding that the mean PCP concentration is less than the action level of 10 mg/kg, posed more severe consequences for human health plus liability and compliance concerns. Consequently, the baseline condition chosen for the SWMU was that the mean PCP concentration within the SWMU is truly greater than or equal to the action level of 10 mg/kg.

Table I-1. Null Hypothesis and Possible Decision Errors for Example 1

"Null Hypothesis" (baseline condition)	***Possible Decision Errors***	
	Type I Error (α), False Rejection	***Type II Error (β), False Acceptance***
The true mean concentration of PCP in the SWMU is greater than or equal to the risk-based cleanup standard (i.e., the SWMU is contaminated).	Concluding the site is "clean" when, in fact, it is contaminated.	Concluding the site is still contaminated when, in fact, it is "clean."

- Next, it was necessary to specify the boundaries of the gray regions. The gray region defines a range that is less than the action limit, but too close to the Action Level to be considered "clean," given uncertainty in the data. When the null hypothesis (baseline condition) assumes that the site is contaminated (as in this example), the upper limit of the gray region is bounded by the Action Level; the lower limit is determined by the decision maker. The project team sets the lower bound of the gray region at 7.5 mg/kg, with the understanding that this bound could be modified after review of the outputs of Step 7 of the DQO Process.

- The planning team set the acceptable probability of making a Type I (false rejection) error at 5 percent ($\alpha = 005$) based on guidance provided by the State regulatory agency. In other words, the team was willing to accept a 5 percent chance of concluding the SWMU was clean, if in fact it was not. While a Type II (false acceptance) error could prove to be costly to the company, environmental protection and permit compliance are judged to be most important. The planning team decides to set the Type II error rate at only 20 percent.

- The information collected in Step 6 of the DQO Process is summarized below.

EPAPAV0054520

Table I-2. Initial Outputs of Step 6 of the DQO Process

Needed Parameter	Output
Action Level (AL)	10 mg/kg
Gray Region	7.5 - 10 mg/kg (width of gray region, Δ = 2.5)
Relative Width of Gray Region	(10 - 7.5)/7.5 = 0.33
Null Hypothesis (H_o)	Mean (PCP) $\geq$ 10 mg/kg
False Rejection Decision Error Limit (probability of a Type I error)	α = 005
False Acceptance Decision Error Limit (probability of a Type II error)	β = 020

DQO Step 7: Optimizing the Data Collection Design

1. ***Review outputs from the first six steps of the DQO Process.*** The project team reviewed the outputs of the first six steps of the DQO Process. They expected the PCP concentration to be near the cleanup standard (Action Level); thus, it was decided that a probabilistic sampling design would be used so that the results could be stated with a known probability of making a decision error.

2. ***Consider various data collection designs.*** The objective of this step was to find cost-effective design alternatives that balance the number of samples and the measurement performance, given the feasible choices for sampling designs and measurement methods. Based on characterization data from the excavated soil, the planning team assumed that the between-sample unit variability or population variability would remain relatively stable at approximately s_b = 050 , independent of the sampling and analytical methods used. The planning team investigated various combinations of sampling and analytical methods (with varying associated levels of precision and cost) as a means find the optimal study design.

   The planning team considered three probabilistic sampling designs: simple random, stratified random, and systematic (grid-based) designs. A composite sampling strategy also was considered. All designs allowed for an estimate of the mean to be made. Because the existence of strata was not expected (although could be discovered during the investigation), the stratified design was eliminated from consideration. A simple random design is the simplest of the probabilistic sampling methods, but it may not provide very even coverage of the SWMU; thus, if spatial variability becomes a concern, then it may go undetected with a simple random design. The systematic design provides more even coverage of the SWMU and typically is easy to implement.

   The practical considerations were considered for each alternative design, including site access and conditions, equipment selection/use, experience

needed, special analytical needs, health and safety requirements, and scheduling. There were no significant practical constraints that would limit the use of either the systematic or the simple random sampling designs; however, the systematic design was preferred because it provides sampling locations that are easier to survey and locate in the field, and it provides better spatial coverage. Ultimately, two sampling designs were evaluated: a systematic sampling design and a systematic sampling design that incorporates composite sampling.

The acceptable mass of each primary field sample was determined using the particle size-weight relationship required to control fundamental error. The soil in the SWMU is a granular solid, and the 95th percentile particle size (d) was estimated at 1.5 mm (0.15 cm). To maintain the relative standard deviation of the fundamental error at 0.10, a sample mass of at least 8.2 grams was required (using Equation D.4 in Appendix D). To maintain the relative standard deviation of the fundamental error at 0.05, a sample mass of at least 30 grams would be required. There were no practical constraints on obtaining samples of these sizes.

Next, it was necessary to estimate unit costs for sampling and analysis. Based on prior experience, the project team estimated the cost of collecting a grab sample at $40 – plus an additional $30 per sample for documentation, processing of field screening samples, and $60 per sample for documentation, processing, and shipment for samples sent for fixed laboratory analysis.

3. ***Select the optimal number of samples.*** Using the initial outputs of Step 6, the appropriate number of samples was calculated for each sampling design:

For the <u>systematic sampling</u> design (without compositing), the following formula was used (Equation 8 from Section 5.4.1):

$$n = \frac{(z_{1-\alpha} + z_{1-\beta})^2 s_T^2}{\Delta^2} + \frac{z_{1-\alpha}^2}{2}$$

where

$z_{1-\alpha}$	=	the pth quantile of the standard normal distribution (from the last row of Table G-1, Appendix G), where α is the probability of making a Type I error (the significance level of the test) set in DQO Step 6.
$z_{1-\beta}$	=	the pth quantile of the standard normal distribution (from the last row of Table G-1, Appendix G), where β is the probability of making a Type II error set in DQO Step 6.
s_T	=	an estimate of the total study relative standard deviation.
Δ	=	the width of the gray region from DQO Step 6 (expressed as the relative error in this example).

[EPA's DEFT software could be used to calculate the appropriate number of samples (see *Data Quality Objectives Decision Error Feasibility Trials Software (DEFT) - User's Guide,* USEPA 2001h). Note, however, that the DEFT program asks for the bounds of the gray region specified in absolute units. If the planning team uses the relative standard deviation (or coefficient of variation) in the sample size equation rather than the absolute standard deviation, then the bounds of the gray region also must be input into DEFT as relative values. Thus, the Action Level would be set equal to 1, and the other bound of the gray region would be set equal to 1 - (relative width of gray region) or 1 + (relative width of gray region) depending what baseline condition is selected.]

Note that if there were more than one constituent of concern, then the appropriate number of samples would need to be calculated for each constituent using preliminary estimates of their standard deviations. The number of samples would then be determined by the highest number of samples obtained for any single constituent of concern.

The sample size for systematic composite sampling also was evaluated. In comparison to non-composite sampling, composite sampling can have the effect of minimizing between-sample variation, thereby reducing somewhat the total number of composite samples that must be submitted for analysis. In addition, composite samples are expected to generate normally distributed data thereby allowing the team to apply normal theory statistical methods. To estimate the sample size, the planning team again required an estimate of the standard deviation. However, since the original estimate of the standard deviation was based on available individual or "grab" sample data rather than composite samples, it was necessary to adjust the variance term in the sample size equation for the appropriate number of composite samples. In the sample size equation, the between-unit (population) component of variance (s_b^2) was replaced with s_b^2/g, where g is the number of individual or "grab" samples used to form each composite. Sample sizes were then calculated assuming $g = 4$.

Table I-3 and Table I-4 summarize the inputs and outputs of Step 7 of the DQO Process and provides the estimated costs for the various sampling and analysis designs evaluated.

EPAPAV0054523

Table I-3. Summary of Inputs for Candidate Sampling Designs

Parameter	Systematic Sampling - Fixed Lab Analyses	Systematic Sampling - Field Analyses	Systematic Composite Sampling - Fixed Lab Analyses	Systematic Composite Sampling - Field Analyses
Inputs				
Sampling Costs				
Collection Cost (per "grab")	$40 ea.	$40 ea.	$40 ea.	$40 ea.
Documentation, processing, shipment	$60 ea.	$30 ea.	$60 ea.	$30 ea.
Analytical Costs				
SW-846 Method 3550/8270 (fixed lab)	$110 ea.	$110 ea.*	$110 ea.	$110 ea.*
SW-846 Method 4010A (field screening)	NA	$20 ea.	NA	$20 ea.
Relative Width of Gray Region (Δ)	0.33	0.33	0.33	0.33
Null Hypothesis (H_o)	Mean (PCP) $\geq$ 10 mg/kg	Mean (PCP) $\geq$ 10 mg/kg	Mean (PCP) $\geq$ 10 mg/kg	Mean (PCP) $\geq$ 10 mg/kg
False Rejection Decision Error Limit	$\alpha = 0.05$	$\alpha = 0.05$	$\alpha = 0.05$	$\alpha = 0.05$
False Acceptance Decision Error Limit	$\beta = 0.20$	$\beta = 0.20$	$\beta = 0.20$	$\beta = 0.20$
Relative Std. Dev.				
Sampling (s_s)	0.10	0.10	0.10	0.10
Analytical (s_a), SW-846 Method 8270	0.10	NA	0.10	NA
Analytical (s_a) SW-846 Method 4010A	NA	0.40	NA	0.40
"Population" (s_b)	0.50	0.50	0.50	0.50
Total Study $s_T = \sqrt{s_s^2 + s_a^2 + s_b^2}$	0.52	0.65	0.29**	0.48**

NA: Not applicable
* Assumes 20-percent of all field analyses must be confirmed via fix laboratory method.

** For composite sampling, the total study relative standard deviation (s_T) was estimated by replacing s_b^2 with s_b^2/g, where g = the number of "grabs" per composite.

EPAPAV0054524

Table I-4. Summary of Outputs for Candidate Sampling Designs

Parameter	Systematic Sampling - Fixed Lab Analyses	Systematic Sampling - Field Analyses	Systematic Composite Sampling - Fixed Lab Analyses	Systematic Composite Sampling - Field Analyses
Outputs				
Number of Samples (n)	17	25	6	15
Cost Estimate				
"Grab" Sampling	$40 x 17	$40 x 25	$40 x 4 x 6 (see note 1)	$40 x 4 x 15 (see note 1)
Documentation, processing, and shipment	$60 x 17	($30 x 25) + ($60 x 5) (see note 2)	$60 x 6	($30 x 15) + ($60 x 3) (see note 2)
SW-846 Method 3550/8270 (fixed lab)	$110 x 17	$110 x 5 (see note 2)	$110 x 6	$110 x 3 (see note 2)
SW-846 Method 4010A (field screening)	NA	$20 x 25	NA	$20 x 15
Cost	**$3,570**	**$3,100**	**$1,980**	**$3,660**

1. The calculation assumes four grabs per composite sample.
2. The calculation includes costs for shipment and analysis of 20% of field screening samples for fixed laboratory analysis.
NA: Not applicable

4. ***Select a resource-effective design.*** It was determined that all of the systematic designs and systematic composite sampling designs would meet the statistical performance requirements for the study in estimating the mean PCP concentration in the SWMU. The project team selected the systematic composite sampling design - with fixed laboratory analysis - based on the cost savings projected over the other sampling designs.

   The planning team decided that one additional field quality control sample (an equipment rinsate blank), analyzed by SW-846 Method 8720, was required to demonstrate whether the sampling equipment was free of contamination.

   The outputs of the DQO Process were summarized in a memo report which was then used help prepare the QAPP.

5. ***Prepare a QAPP.*** The operational details of the sampling and analytical activities were documented in the QAPP using *EPA Guidance for Quality Assurance Project Plans, EPA QA/G-5* (USEPA 1998a) and Chapter One of SW-846 for guidance.

EPAPAV0054525

Implementation Phase

The QAPP was implemented in accordance with the schedule, sampling plan, and safety plan. The exact location of each field sample was established using a grid on a map of the SWMU. The start point for constructing the grid was selected at random.

The QAPP established the following DQOs and performance goals for the sampling equipment:

- The correct orientation and shape of each sample is a vertical core.
- Each sample must capture the full depth of interest (six inches).
- The minimum mass of each sample is 10 g.
- The device must be constructed of materials that will not alter analyte concentrations due to loss or gain of analytes via sorption, desorption, degradation, or corrosion.
- The device must be easy to use, safe, and low cost.

A sampling device was selecting using the four-steps described in Figure 28 in Section 7.1.

Step 1 - Identify the Medium to be Sampled

The material to be sampled is a soil. Using Table 8 in Section 7.1, we find the media descriptor that most closely matches the waste in the first column of the table: "Soil and other unconsolidated geologic material."

Step 2 - Select the Sample Location

The second column of Table 8 in Section 7.1 provides a list of possible sampling sites (or units types) for soil (i.e., surface or subsurface). In this example, the sampling location is surface soil and "Surface" is found in the second column in the table.

Step 3 - Identify Candidate Sampling Devices

The third column of Table 8 in Section 7.1 provides a list of candidate sampling devices. For the waste stream in this example, the list includes bucket auger, concentric tube thief, coring type sampler, miniature core sampler, modified syringe, penetrating probe sampler, sampling scoop/trowel/shovel, thin-walled tube, and trier.

Step 4 - Select Devices

Sampling devices were selected from the list of candidate sampling devices after review of Table 9 in Section 7.1. Selection of the equipment was made after consideration of the DQOs for the sample support (i.e., required volume, depth, shape, and orientation), the performance goals established for the sampling device, ease of use and decontamination, worker safety issues, cost, and any practical considerations.

EPAPAV0054526

Table I-5 demonstrates how the DQOs and performance goals can be used together to narrow the candidate devices down to just one or two.

Table I-5. Using DQOs and Performance Goals to Select a Final Sampling Device

Candidate Devices	***Data Quality Objectives and Performance Goals***				
	Required Depth	***Orientation and Shape***	***Sample Volume***	***Operational Considerations***	***Desired Material of Construction***
	6 inches	Vertical undisturbed core	>10 g	Device is portable, safe, & low cost?	Stainless or carbon steel
Bucket auger	Y	N	Y	Y	Y
Concentric tube thief	Y	N	YY		Y
Coring Type Sampler	Y	N	YY		Y
Miniature core sampler	Y	Y	NY		N
Modified syringe sampling	N	N	NY		N
Penetrating Probe Sampler	Y	Y	YY		Y
Scoop, trowel, or shovel	Y	N	YY		Y
Thin-walled tube	Y	Y	Y	Y	Y
Trier	Y	N	Y	Y	Y

Key: Y = The device is capable of achieving the specified DQO or performance goal.
N = The device is not capable of achieving the DQO or performance goal.

The "penetrating probe sampler" and the "thin-walled tube" were identified as the preferred devices because they could satisfy all of the DQOs and performance goals for the sampling devices. The penetrating probe was selected because it was easy to use and was readily available to the field sampling crew.

A penetrating probe sampler was then used to take the field samples at each location on the systematic square grid (see Figure I-1). Each composite sample was formed by pooling and mixing individual samples collected from within each of four quadrants. The process was repeated until six composite samples were obtained. Because the total mass of each individual (grab) sample used to form composite samples exceeded that required by the laboratory for analysis, a field subsampling routine was used to reduce the volume of material submitted to the laboratory.

The field samples and associated field QC samples were submitted to the laboratory where a subsample was taken from each field sample for analysis. The samples were analyzed in accordance with the QAPP.

EPAPAV0054527

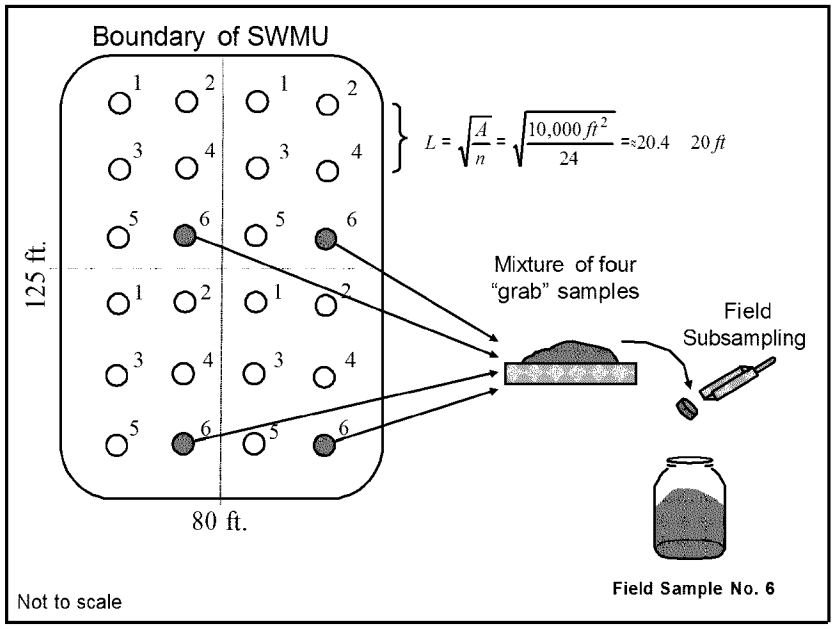

Figure I-1. Systematic sampling with compositing. The distance between sampling points (L) is determined using the approach described in Section 5.2.3 (Box 5). Samples with the same number are pooled and mixed to form each composite sample. A field sample is formed from each composite using one of the subsampling methods described in Section 7.3.2 (e.g., by fractional shoveling).

Assessment Phase

Data Verification and Validation

Sampling and analytical records were reviewed to check compliance with the QAPP. The data collected during the study met the measurement objectives. Sampling and analytical error were minimized through the use of a statistical sampling design, correct field sampling and subsampling procedures, and adherence to the requirements of the analytical methods. The soil that was sampled did not present any special problems concerning access to sampling locations, equipment usage, particle-size distribution, or matrix interferences. A quantitation limit of 0.5 mg/kg was achieved. The analytical package was verified and validated, and the data generated were judged acceptable for their intended purpose.

Data Quality Assessment (DQA)

DQA was performed using the approach outlined in Section 8.2:

1. ***Review DQOs and sampling design.*** The DQO planning team reviewed the original objectives: "If the mean concentration for PCP in the soil is less than 10 mg/kg, then the cleanup standard is attained. Otherwise, the SWMU will be considered contaminated and additional remedial action will be required."

EPAPAV0054528

2. ***Prepare the data for statistical analysis.*** The summary of the verified and validated data were received in hard-copy format and an electronic data base was created by manual data entry into spreadsheet software. The data base was checked by a second person for accuracy. The results for the data collection effort are listed in Table I-6. A data file was created in a format suitable for import into EPA's *DataQUEST* software.

Table I-6. Soil Sample Analysis Results for PCP (mg/kg)

Sample Identification	*Result (PCP, mg/kg)*
1	8.0
2	8.0
3	7.0
4	6.0
5	10.5
6	7.5

3. ***Conduct preliminary analysis of data and check distributional assumptions***: Using EPA's *DataQUEST*, statistical quantities were computed as shown in Figure I-2.

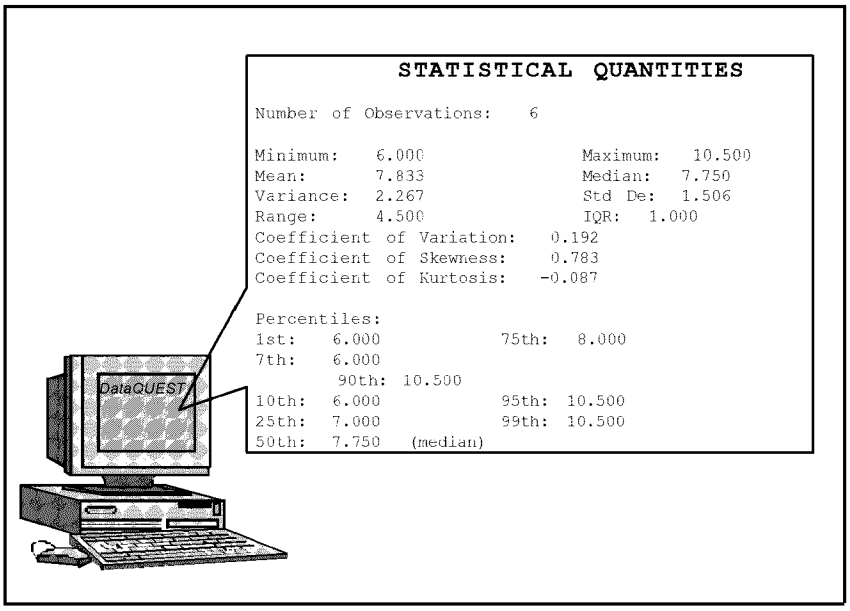

Figure I-2. Statistical quantities using *DataQUEST* software

On a normal probability plot, the data plot as a straight line, indicating approximate normality (see Figure I-3).

EPAPAV0054529

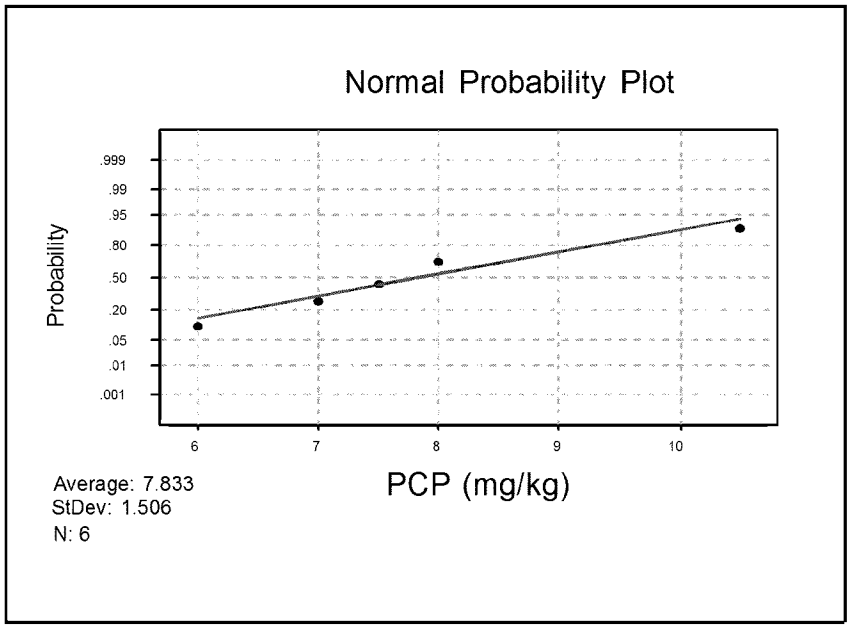

Figure I-3. Normal probability plot

The data also were checked for normality by the Shapiro-Wilk test. Using the *DataQUEST* software, the Shapiro-Wilk test was performed at the 0.05 percent significant level. The Shapiro-Wilk test did not reject the null hypothesis of normality (see Figure I-4).

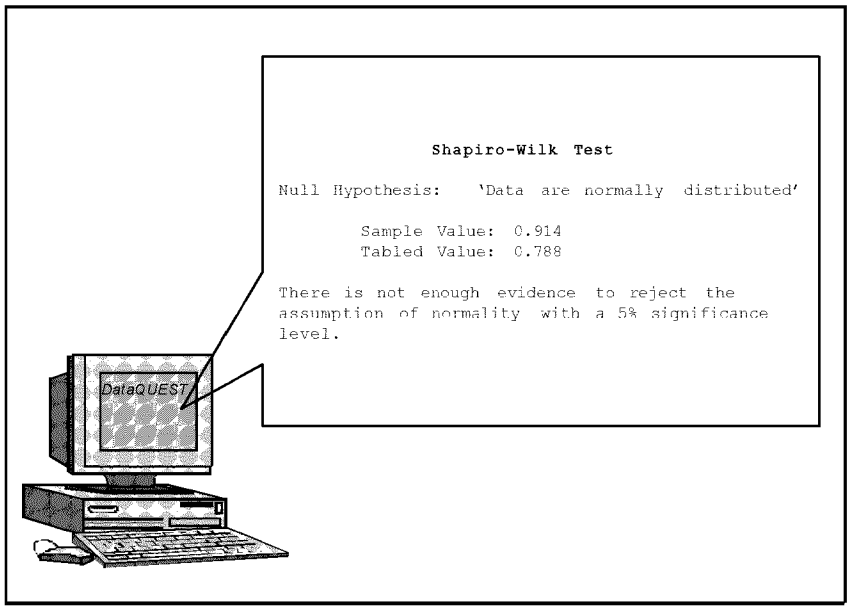

Figure I-4. Results of the Shapiro-Wilk test using EPA's *DataQUEST* software

EPAPAV0054530

4. ***Select and perform the statistical test***: The analysis of the data showed there were no "non-detects" and a normal distribution was an acceptable model. Using the guidance in Figure 38 (Section 8.2.4), a parametric upper confidence limit (UCL) on the mean was selected as the correct statistic to compare to the regulatory level. The 95% UCL on the mean was calculated as follows:

$$UCL_{0.95} = \bar{x} + t_{0.95,n-1}\frac{s}{\sqrt{n}}$$

$$= 7.833 + 2.015\left[\frac{1.506}{\sqrt{6}}\right]$$

$$= 9.1 \text{ mg/kg}$$

The tabulated "t value" (2.015) was obtained from Table G-1 in Appendix G and based on a 95-percent one-tailed confidence interval with $\alpha = 0.05$ and 5 degrees of freedom.

5. ***Draw conclusions and report results:*** The 95% UCL for the mean of the sample analysis results for PCP, 9.1 mg/kg, was less than the specified cleanup level of 10 mg/kg. Thus, the null hypothesis was rejected, and the owner made the determination that the soil remaining in the SWMU attains the cleanup standard for PCP based on the established decision rule.

   A summary report including a description of all planning, implementation, and assessment activities was submitted to the regulatory agency for review.

EPAPAV0054531

Example 2: Sampling of a Process Waste to Make a Hazardous Waste Determination

Introduction

An aircraft manufacturing and maintenance facility strips paint from parts before remanufacturing them. The facility recently switched its paint stripping process from a solvent-based system to use of an abrasive plastic blasting media (PBM). The waste solvent, contaminated with stripped paint, had to be managed as a hazardous waste. The facility owner changed the process to reduce - or possibly eliminate - the generation of hazardous waste from this operation and thereby reduce environmental risks and lower waste treatment and disposal costs.

The plant operators thought the spent PBM could include heavy metals such as chromium and cadmium from the paint, and therefore there was a need to make a hazardous waste determination in order to comply with the RCRA regulations at 40 CFR Part 262.11. The facility owner determined that the spent PBM is a solid waste under RCRA but not a listed hazardous waste. The facility owner then needed to determine if the solid waste exhibits any of the characteristics of hazardous waste: ignitability (§261.21), corrosivity (§261.22), reactivity (§261.23), or toxicity (§261.24). Using process and materials knowledge, the owner determined that the waste blasting media would not exhibit the characteristics of ignitability, corrosivity, or reactivity. The facility owner elected to conduct waste testing to determine if the waste blasting media exhibits the characteristic of toxicity.

This hypothetical example describes how the planning, implementation, and assessment activities were conducted.

Planning Phase

The planning phase comprises the Data Quality Objectives (DQO) Process and preparation of a quality assurance project plan (QAPP) including a sampling and analysis plan. A DQO planning team was assembled and the DQO Process was implemented following EPA's guidance in *Guidance for the Data Quality Objectives Process EPA QA/G-4* (USEPA 2000b) and SW-846.

The outputs of the seven steps of the DQO Process are outlined below.

DQO Step 1: Stating the Problem

- The DQO planning team included the plant manager, a technical project manager, a consulting chemist, and the paint stripping booth operator who also served as the sampler.

- The conceptual model of the waste generation process was developed as follows: The de-painting operation consists of a walk-in blast booth with a reclamation floor. After blasting, the plastic blast media, mixed with paint fines, is passed through a reclamation system; the reusable media is separated out for reloading to the blast unit, while the spent media and paint waste is discharged to a container.

EPAPAV0054532

- A concise description of the problem was developed as follows: The problem was described as determining whether the new waste stream (the spent plastic blasting media and waste paint) should be classified as a hazardous waste that requires treatment and subsequent disposal in a RCRA Subtitle C landfill (at $300 per ton), or whether it is a nonhazardous industrial waste that can be land-disposed in an industrial landfill (at $55 per ton).

- The plant manager gave the plant staff and consultant 60 days to complete the study. The turn-around time was established to minimize the amount of time that the waste was stored at the facility while the data were being generated, and to allow adequate time to have the waste shipped off site - if it were found to be a hazardous waste - within the 90-day accumulation time specified at 40 CFR Part 262.34(a).

DQO Step 2: Identifying Possible Decisions

- Decision statement: The decision statement was determining whether the spent PBM paint waste was hazardous under the RCRA regulations.

- Alternative actions: If the waste was hazardous, then treatment and subsequent disposal in a RCRA landfill would be required.

DQO Step 3: Identifying Inputs to the Decision

- The decision was to be based on the quantity of waste generated over approximately a one-month period, but not to exceed the quantity placed in a single 10-cubic yard roll off box.

- Based on process and materials knowledge, the team specified cadmium and chromium as the constituents of concern.

- To resolve the decision statement, the planning team needed to determine if, using the Toxicity Characteristic Leaching Procedure (TCLP) SW-846 Method 1311, the extract from a representative sample of the waste contained the constituents of concern at concentrations equal to or greater than their regulatory levels as required by the RCRA regulations at 40 CFR 261.24. The chemist noted, however, that the TCLP method allows the following: "If a total analysis of the waste demonstrates that individual analytes are not present in the waste, or that they are present but at such low concentrations that the appropriate regulatory levels could not possibly be exceeded, the TCLP need not be run." With that flexibility in mind, the planning team identified a candidate method for total analysis (including SW-846 Method 3050B/6010), and noted that the TCLP would be required if the total analysis indicated TC levels could be exceeded.

- The project chemist found that SW-846 Methods 3010A (prep) and 6010B were suitable for analysis of the TCLP extracts at quantitation limits at or below the applicable regulatory levels.

EPAPAV0054533

- The minimum sample "support" was determined as follows: Method 1311 (TCLP) specifies a minimum sample mass of 100 grams for analysis of nonvolatile constituents and a maximum particle size of 9.5 mm. The waste stream, composed of dry fine to medium-grained plastic and paint chips, was well within the particle size requirements of the TCLP. During Step 7 of the DQO Process, the planning team revisited this step to determine whether a sample mass larger than 100-grams would be necessary to satisfy the overall decision performance criteria.

DQO Step 4: Defining Boundaries

- The paint stripping operation includes a blast booth, a PBM reclamation unit, and a waste collection roll-off box that complies with the applicable container requirements of Subparts I and CC of 40 CFR part 265. The spent blast media and paint waste is discharged to the roll-off box from the reclamation unit. Each discharge event was considered a "batch" for the purposes of the waste classification study.

- When testing a solid waste to determine if it exhibits a characteristic of hazardous waste, the determination must be made when management of the solid waste would potentially be subject to the RCRA hazardous waste regulations at 40 CFR Part 262 through 265. Accordingly, the planning team decided samples should be obtained at the point where the waste discharges from the reclamation unit into the roll-off container (i.e., the point of generation). Until such time that the generator determined that the waste is not a hazardous waste, the generator complied with the applicable pre-transport requirements at 40 CFR Part 262 - Subpart C (i.e., packaging, labeling, marking, and accumulation time).

- The boundary of the decision was set as the extent of time over which the decision applies. The boundary would change only if there were a process or materials change that would alter the composition of the waste. Such a process or materials change could include, for example, a change in the composition, particle size or particle shape of the blasting media, or a significant change in the application (pressure) rate of the blast media.

DQO Step 5: Developing Decision Rules

- The planning team reviewed the RCRA regulations at for the Toxicity Characteristic at 40 CFR 261.24 and found the regulation does not specify a parameter of interest (such as the mean or a percentile). They observed, however, that the Toxicity Characteristic (TC) regulatory levels specified in Table 1 of Part 261.24 represent "maximum" concentrations that cannot be equaled or exceeded; otherwise, the solid waste must be classified as hazardous. While the regulations for hazardous waste determination do not require the use of any statistical test to make a hazardous waste determination, the planning team decided to use a high percentile value as a reasonable approximation of the maximum TCLP sample analysis result that could be obtained from a sample of the waste. Their objective was to "prove the negative" - that is, to demonstrate

EPAPAV0054534

with a desired level of confidence that the vast majority of the waste was nonhazardous. The upper 90th percentile was selected. The team specified an additional constraint that no single sample could exceed the standard. Otherwise, there may be evidence that the waste is hazardous at least part of the time.

- The Action Levels were set at the TC regulatory limits specified in Table 1 of 40 CFR Part 261.24:

  Cadmium: 1.0 mg/L TCLP
  Chromium: 5.0 mg/L TCLP

- The decision rule was then established as follows: "If the upper 90th percentile TCLP concentration for cadmium or chromium in the waste <u>and</u> all samples analysis results are less than their respective action levels of 1.0 and 5.0 mg/L TCLP, then the waste can be classified as nonhazardous waste under RCRA; otherwise, the waste will be considered a hazardous waste."

DQO Step 6: Specifying Limits on Decision Errors

- The null hypothesis was that the waste is hazardous, i.e., the true proportion (P) of samples with concentrations of cadmium or chromium less than their regulatory thresholds is less than 0.90, or Ho: $P < 0.90$.

- Two potential decision errors could be made based on interpreting sampling and analytical data:

  Decision Error A: Concluding that the true proportion (P) of the waste that is nonhazardous was greater than 0.90 when it was truly less than 0.90, or

  Decision Error B: Concluding that the true proportion (P) of the waste that is nonhazardous was less than 0.90 when it was truly greater than 0.90.

The consequences of Decision Error A - incorrectly deciding the waste was nonhazardous - would lead the facility to ship untreated hazardous waste off site for disposal in solid waste landfill, likely increase health risks for onsite workers, and pose potential future legal problems for the owner.

The consequences of Decision Error B - incorrectly deciding the waste was hazardous when in fact it is not hazardous - would cause the needless costs for treatment and disposal, but with no negative environmental consequences.

Error A, incorrectly deciding that a hazardous waste is a nonhazardous waste, posed more severe consequences for the generator in terms of liability and compliance concerns. Consequently, the baseline condition (null hypothesis) chosen was that the true proportion of waste that is nonhazardous is less than 90 percent.

EPAPAV0054535

Table I-7. Null Hypothesis and Possible Decision Errors for Example 2

"Null Hypothesis" (baseline condition)	***Possible Decision Errors***	
	Type I Error (α), False Rejection	***Type II Error (β), False Acceptance***
The true proportion (P) of waste that is nonhazardous is less than 0.90.	Concluding the waste is nonhazardous when, in fact, it is hazardous.	Concluding the waste is hazardous when, in fact, it is nonhazardous.

- Next, it was necessary to specify the boundaries of the gray region. When the null hypothesis (baseline condition) assumes that the waste is hazardous (as in this example), one limit of the gray region is bounded by the Action Level and the other limit is set at a point where it is desirable to control the Type II (false acceptance) error. The project team set one bound of the gray region at 0.90 (the Action Level). Since a "no exceedance" criterion is included in the decision rule, the other bound of the gray region is effectively set at 1.

- The DQO planning team then sets the acceptable probability of making a Type I (false rejection) error at 10 percent ($\alpha = 010$). In other words, they are willing to accept a 10 percent chance of concluding the waste is nonhazardous when at least a portion of the waste is hazardous. The use of the exceedance rule method does not require specification of the Type II (false acceptance) error rate.

- The information collected in Step 6 of the DQO Process is summarized below.

Table I-8. Initial Outputs of Step 6 of the DQO Process - Example 2

Needed Parameter	Output
Action Level	0.90
Gray Region	0.90 to 1.0 (Δ = 0.10)
Null Hypothesis (H_o)	P < 0.90
False Rejection Decision Error Limit (probability of a Type I error)	$\alpha = 010$
False Acceptance Decision Error Limit (probability of a Type II error)	Not specified

EPAPAV0054536

DQO Step 7: Optimizing the Data Collection Design

- ***Review outputs from the first six steps of the DQO Process.*** The planning team reviewed the outputs of the first six steps of the DQO Process.

- ***Consider various data collection designs.*** The DQO planning team considered two probabilistic sampling designs: simple random and systematic (random within time intervals). Both the simple random and the systematic design would allow the facility owner to estimate whether a high percentage of the waste complies with the standard. The team also considered using an authoritative "biased" sampling design to estimate the high end or "worst case" waste characteristics.

  Two analytical plans were then considered: One in which the full TCLP would be performed on each sample, and one in which TCLP concentrations could be estimated from total concentration by comparing each total sample analysis result to 20 times the TC regulatory limit (to account for the 20:1 dilution used in the TCLP).

  The laboratory requested a sample mass of at least 300 grams (per sample) to allow the laboratory to perform the preliminary analyses required by the TCLP and to provide sufficient mass to perform the full TCLP (if required).

  The practical considerations were then evaluated for each alternative design, including access to sampling locations, worker safety, equipment selection/use, experience needed, special analytical needs, and scheduling.

- ***Select the optimal number of samples.*** Since the decision rule specified no exceedance of the standard in any sample, the number of samples was determined from Table G-3a in Appendix G. The table is based on the formula $n = \log(\alpha)/\log(p)$. For a desired $p = 090$ and $() - \alpha = 0.90$, the number of samples (n) for a simple random or systematic sampling design was 22.

  The team also considered how many samples might be required if a nonprobabilistic authoritative sampling design were used. Some members of the planning team thought that significantly fewer samples (e.g., four) could be used to make a hazardous waste determination, and they pointed out that the RCRA regulations do not require statistical sampling for waste classification. On the other hand, other members of the planning team argued against the authoritative design. They argued that there was insufficient knowledge of the waste to implement authoritative sampling and noted that a few samples taken in a non-probabilistic manner would limit their ability to quantify any possible decision errors.

- ***Select a resource-effective design.*** The planning team evaluated the sampling and analytical design options and costs. The following table summarizes the estimated costs for the four sampling designs evaluated.

EPAPAV0054537

Table I-9. Estimated Costs for Implementing Candidate Sampling Designs

	Simple Random or Systematic Sampling (total metals only)	Simple Random or Systematic Sampling (TCLP metals)	Authoritative (Biased) Sampling (total metals only)	Authoritative (Biased) Sampling (TCLP metals)
Sample collection cost (per sample)	$50	$50	$50	$50
Analysis cost				
• SW-846 Methods 3050B/ 6010B (total Cd and Cr) (per sample)	$40		$40	
• SW-846 TCLP Method 1311. Extract analyzed by SW-846 Methods 3010A/6010B (per sample)		$220		$220
Number of samples	22	22	4	4
Total Estimated Cost	**$1,980**	**$5,940**	**$360**	**$1,080**

While the authoritative design with total metals analysis offered the least cost compared to the probabilistic designs, the team decided that they did not have sufficient knowledge of the waste, its leaching characteristics, or the process yet to use an authoritative sampling approach with total metals analysis only. Furthermore, the team needed to quantify the probability of making a decision error. The planning team selected the systematic design with total metals analysis for Cd and Cr with the condition that if any total sample analysis result indicated the maximum theoretical TCLP result could exceed the TC limit, then the TCLP would be performed for that sample. This approach was selected for its ease of implementation, it would provide adequate waste knowledge for future waste management decisions (assuming no change in the waste generation process), and would satisfy other cost and performance objectives specified by the planning team.

- ***Prepare a QAPP/SAP.*** The operational details of the sampling and analytical activities are documented in a Quality Assurance Project Plan and Sampling and Analysis Plan (QAPP/SAP).

Implementation Phase

The QAPP/SAP was implemented in accordance with the schedule and the facility's safety program. Based on the rate of waste generation, it was estimated that the roll-off box would be filled in about 30 work days assuming one "batch" of waste was placed in the roll off box each day. It was decided to obtain one random sample from each batch as the waste was discharge from the reclamation unit to the roll-off container (i.e., at the *point of waste generation*). See Figure I-5.

EPAPAV0054538

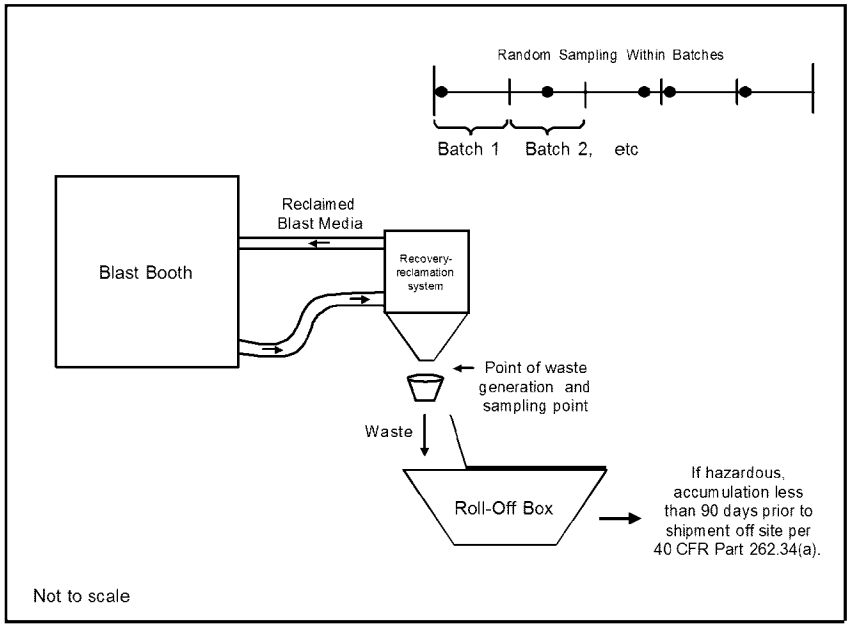

Figure I-5. Systematic sampling design with random sampling times selected within each batch

The QAPP/SAP established the following DQOs and performance goals for the equipment.

The sampling device must meet the following criteria:

- Be able to obtain a minimum mass of 300 grams for each sample
- Be constructed of materials that will not alter analyte concentrations due to loss or gain of analytes via sorption, desorption, degradation, or corrosion
- Be easy to use, safe, and low cost
- Be capable of obtaining increments of the waste at the discharge drop without introducing sampling bias.

The following four steps were taken to select the sampling device (from Section 7.1):

Step 1 - Identify the Medium To Be Sampled

Based on a prior inspection, it was known that the waste is a unconsolidated dry granular solid. Using Table 8 in Section 7.1, we find the media descriptor that most closely matches the waste in the first column of the table: "Other Solids - Unconsolidated."

Step 2 - Select the Sample Location

The second column of Table 8 provides a list of common sampling locations for unconsolidated solids. The discharge drop opening is four inches wide, and the waste is released downward into the collection box. "Pipe or Conveyor" found in the table is the closest match to the

EPAPAV0054539

configuration of the waste discharge point.

Step 3 - Identify Candidate Sampling Devices

The third column of Table 8 provides a list of candidate sampling devices for sampling solids from a pip or conveyor. For this waste stream, the list of devices for sampling a pipe or conveyor includes bucket, dipper, pan, sample container, miniature core sampler, scoop/trowel/shovel, and trier. The planning team immediately eliminated miniature core sampler, scoop/trowel/shovel, and trier because they are not suitable for obtaining samples from a falling stream or vertical discharge.

Step 4 - Select Devices

From the list of candidate sampling devices, one device was selected for use in the field from Table 9 in Section 7.1. Selection of the equipment was made after consideration of the DQOs for the sample support (i.e., required volume, width, shape, and orientation), the performance goals established for the sampling device, ease of use and decontamination, worker safety issues, cost, and any practical considerations. Table I-10 demonstrates how the DQOs and performance goals were used to narrow the candidate devices down to just one or two.

Table I-10. Using DQOs and Performance Goals To Select a Final Sampling Device

Candidate Devices	***Data Quality Objectives and Performance Goals***				
	Required Width	***Orientation and Shape***	***Sample Volume***	***Operational Considerations***	***Desired Material of Construction***
	4 inches	Cross-section of entire stream	>300 g	Device is portable, safe, and low cost?	Polyethylene or PTFE
Bucket	Y	Y	Y	Y	Y
Dipper	N	Y	Y	Y	Y
Pan	Y	Y	Y	Y	Y
Sample container	N	N	Y	YY	

Key: Y = The device is capable of achieving the specified DQO or performance goal.
N = The device is not capable of achieving the specified DQO or performance goal.

The sampling mode was "one-dimensional," that is, the material is relatively linear in time and space. The ideal sampling device would obtain a sample of constant thickness and must be capable of obtaining the entire width of the stream for a fraction of the time (see discussion at Section 6.3.2.1). Either a bucket or pan wide enough (preferably 3 times the width of the stream) to obtain all of the flow for a fraction of the time are identified as suitable devices because they are capable of achieving all the performance goals.

A flat 12-inch wide polyethylene pan with vertical sides was used to collect each primary field sample. Each primary field sample was approximately 2 kilograms, therefore, the field team used the "fractional shoveling" technique (see Section 7.3.2) to reduce the sample mass to a subsample of approximately 300 grams. The field samples (each in a 32-oz jar) and associated

EPAPAV0054540

field QC samples were submitted to the laboratory in accordance with the sample handling and shipping instructions specified in the QAPP/SAP.

A total of 30 samples were obtained by the time the roll-off box was filled, so it was necessary to randomly select 22 samples from the set of 30 for laboratory analysis.

All 22 samples were first analyzed for total cadmium and chromium to determine if the maximum theoretical TCLP concentration in any one sample could exceed the applicable TC limit. Samples whose maximum theoretical TCLP value exceeded the applicable TC limit were then analyzed using the full TCLP.

For the TCLP samples, no particle-size reduction was required for the sample extraction because the maximum particle size in the waste passed through a 9.5 mm sieve (the maximum particle size allowed for the TCLP). (On a small subsample of the waste, however, particle size reduction to 1 mm was required to determine the TCLP extract type (I or II)). A 100-gram subsample was taken from each field sample for TCLP analysis.

Assessment Phase

Data Verification and Validation

Sampling and analytical records were reviewed to check compliance with the QAPP/SAP. The data collected during the study met the DQOs. Sampling and analytical error were minimized through the use of a statistical sampling design, correct field sampling and subsampling procedures, and adherence to the requirements of the analytical methods. The material that was sampled did not present any special problems concerning access to sampling locations, equipment usage, particle-size distribution, or matrix interferences. Quantitation limits achieved for total cadmium and chromium were 5 mg/kg and 10 mg/kg respectively. Quantitation limits achieved for cadmium and chromium in the TCLP extract were 0.10 mg/L and 1.0 mg/L respectively. The analytical package was validated and the data generated were judged acceptable for their intended purpose.

Data Quality Assessment

DQA was performed using the approach outlined in Section 9.8.2 and EPA QA/G-9 (USEPA 2000d):

1. ***Review DQOs and sampling design.*** The DQO planning team reviewed the original objectives: "If the upper 90th percentile TCLP concentration for cadmium or chromium in the waste <u>and</u> all samples analysis results are less than their respective action levels of 1.0 and 5.0 mg/L TCLP, then the waste can be classified as nonhazardous waste under RCRA; otherwise, the waste will be considered a hazardous waste."

2. ***Prepare the data for statistical analysis.*** The summary of the verified and validated data were received in hard copy format, and summarized in a table. The table was checked by a second person for accuracy. The results for the data collection effort are listed in Table I-11.

EPAPAV0054541

Table I-11. Total and TCLP Sample Analysis Results

Sample No.	*Cadmium*		*Chromium*	
	Total (mg/kg)	*Total / 20 (TC limit = 1 mg/L)*	*Total (mg/kg)*	*Total / 20 (TC limit = 5 mg/L)*
1	<5	<0.25	11	0.55
2	6	0.3	<10	<0.5
3	29	1.45 (full TCLP = 0.72)	<10	<0.5
4	<5	<0.25	<10	<0.5
5	<5	<0.25	42	2.1
6	7	0.35	<10	<0.5
7	7	0.35	<10	<0.5
8	13	0.65	26	1.3
9	<5	<0.25	19	0.95
10	<5	<0.25	<10	<0.5
11	36	1.8 (full TCLP = 0.8)	<10	<0.5
12	<5	<0.25	<10	<0.5
13	<5	<0.25	<10	<0.5
14	<5	<0.25	12	0.6
15	<5	<0.25	<10	<0.5
16	9	0.45	<10	<0.5
17	<5	<0.25	<10	<0.5
18	<5	<0.25	<10	<0.5
19	<5	<0.25	31	1.55
20	20	1 (full TCLP = <0.10)	<10	<0.5
21	<5	<0.25	<10	<0.5
22	<5	<0.25	<10	<0.5

3. ***Conduct preliminary analysis of data and check distributional assumptions.*** To use the nonparametric "exceedance rule" no distributional assumptions are required. The only requirements are a random sample, and that the quantitation limit is less than the applicable standard. These requirements were met.

4. ***Select and perform the statistical test***: The maximum TCLP sample analysis results for cadmium and chromium were compared to their respective TC regulatory limits. While several of the total results indicated the maximum theoretical TCLP result could exceed the regulatory limit, subsequent analysis of the TCLP extracts from these samples indicated the TCLP concentrations were below the regulatory limits.

EPAPAV0054542

5. ***Draw conclusions and report results.*** All 22 sample analysis results were less than the applicable TC limits, therefore the owner concluded with at least 90-percent confidence that at least 90-percent of all possible samples of the waste would be below the TC regulatory levels. Based on the decision rule established for the study, the owner decided to manage the waste as a nonhazardous waste.[1]

   A summary report including a description of all planning, implementation, and assessment activities was placed in the operating record.

[1] Note that if fewer than 22 samples were analyzed - for example, due to a lost sample - and all sample analysis results indicated concentrations less than the applicable standard, then one still could conclude that 90-percent of all possible samples are less than the standard but with a lower level of confidence. See Section 5.5.2, Equation 17.

EPAPAV0054543

APPENDIX J

SUMMARIES OF ASTM STANDARDS

ASTM (the American Society for Testing and Materials) is one of the entities that can provide additional useful information on sampling. This appendix references many of the standards published by ASTM that are related to sampling.

ASTM is a not-for-profit organization that provides a forum for writing standards for materials, products, systems, and services. The Society develops and publishes standard test methods, specifications, practices, guides, classifications, and terminology.

Each ASTM standard is developed within the consensus principles of the Society and meets the approved requirements of its procedures. The voluntary, full-consensus approach brings together people with diverse backgrounds and knowledge. The standards undergo intense round-robin testing. Strict balloting and due process procedures guarantee accurate, up-to-date information.

Contact ASTM

For more information on ASTM or how to purchase their publications, including the standards referenced by this appendix, contact them at: ASTM, 100 Barr Harbor Drive, West Conshohocken, PA 19428-2959; telephone: 610-832-9585; World Wide Web: http://www.astm.org .

To help you determine which ASTM standards may be most useful, this appendix includes text found in the scope of each standard. The standards, listed in alpha-numerical order, each deal in some way with sample collection. ASTM has future plans to publish these standards together in one volume on sampling.

D 140 Standard Practice for Sampling Bituminous Materials

This practice applies to the sampling of bituminous materials at points of manufacture, storage, or delivery.

D 346 Standard Practice for Collection and Preparation of Coke Samples for Laboratory Analysis

This practice covers procedures for the collection and reduction of samples of coke to be used for physical tests, chemical analyses, and the determination of total moisture.

D 420 Guide to Site Characterization for Engineering, Design, and Construction Purposes

This guide refers to ASTM methods by which soil, rock, and ground-water conditions may be determined. The objective of the investigation should be to identify and locate, both horizontally and vertically, significant soil and rock types and ground-water conditions present within a given site area and to establish the characteristics of the subsurface materials by sampling or *in situ* testing, or both.

EPAPAV0054544

D 1452 Standard Practice for Soil Investigation and Sampling by Auger Borings

This practice covers equipment and procedures for the use of earth augers in shallow geotechnical exploration. It does not apply to sectional continuous flight augers. This practice applies to any purpose for which disturbed samples can be used. Augers are valuable in connection with ground water level determinations, to help indicate changes in strata, and in the advancement of a hole for spoon and tube sampling.

D 1586 Standard Test Method for Penetration Test and Split-Barrel Sampling of Soils

This test method describes the procedure, generally known as the Standard Penetration Test, for driving a split-barrel sampler. The procedure is used to obtain a representative soil sample and to measure the resistance of the soil to penetration of the sampler.

D 1587 Standard Practice for Thin-Walled Tube Geotechnical Sampling of Soils

This practice covers a procedure for using a thin-walled metal tube to recover relatively undisturbed soil samples suitable for laboratory tests of structural properties. Thin-walled tubes used in piston, plug, or rotary-type samplers, such as the Denison or Pitcher sampler, should comply with the portions of this practice that describe the thin-walled tubes. This practice is used when it is necessary to obtain a relatively undisturbed sample. It does not apply to liners used within the above samplers.

D 2113 Standard Practice for Diamond Core Drilling for Site Investigation

This practice describes equipment and procedures for diamond core drilling to secure core samples of rock and some soils that are too hard to sample by soil-sampling methods. This method is described in the context of obtaining data for foundation design and geotechnical engineering purposes rather than for mineral and mining exploration.

D 2234 Standard Practice for Collection of a Gross Sample of Coal

This practice covers procedures for the collection of a gross sample of coal under various conditions of sampling. The practice describes general and special purpose sampling procedures for coals by size and condition of preparation (e.g., mechanically cleaned coal or raw coal) and by sampling characteristics. The sample is to be crushed and further prepared for analysis in accordance with ASTM Method D 2013. This practice also gives procedures for dividing large samples before any crushing.

D 3213 Standard Practices for Handling, Storing, and Preparing Soft Undisturbed Marine Soil

These practices cover methods for project/cruise reporting; and for the handling, transporting and storing of soft cohesive undisturbed marine soil. The practices also cover procedures for preparing soil specimens for triaxial strength, and procedures for consolidation testing. These practices may include the handling and transporting of sediment specimens contaminated with hazardous materials and samples subject to quarantine regulations.

D 3326 Standard Practice for Preparation of Samples for Identification of Waterborne Oils

This practice covers the preparation for analysis of waterborne oils recovered from water. The identification is based on the comparison of physical and chemical characteristics of the waterborne oils with oils from suspect sources. These oils may be of petroleum or vegetable/animal origin, or both. The practice covers the following seven procedures (A through G): Procedure A, for samples of more than 50-mL volume containing significant quantities of hydrocarbons with boiling points above 280°C; Procedure B, for samples containing significant quantities of hydrocarbons with boiling points above 280°C; Procedure C, for waterborne oils containing significant amounts of components boiling below 280°C and to mixtures of these and higher boiling components; Procedure D, for samples containing both petroleum and vegetable/animal derived oils; Procedure E, for samples of light crudes and medium distillate fuels; Procedure F, for thin films of oil-on-water; and Procedure G, for oil-soaked samples.

D 3370 Standard Practices for Sampling Water from Closed Conduits

These practices cover the equipment and methods for sampling water from closed conduits (e.g., process streams) for chemical, physical, and microbiological analyses. It provides practices for grab sampling, composite sampling, and continual sampling of closed conduits.

D 3550 Standard Practice for Ring-Lined Barrel Sampling of Soils

This practice covers a procedure for using a ring-lined barrel sampler to obtain representative samples of soil for identification purposes and other laboratory tests. In cases in which it has been established that the quality of the sample is adequate, this practice provides shear and consolidation specimens that can be used directly in the test apparatus without prior trimming. Some types of soils may gain or lose significant shear strength or compressibility, or both, as a result of sampling. In cases like these, suitable comparison tests should be made to evaluate the effect of sample disturbance on shear strength and compressibility. This practice is not intended to be used as a penetration test; however, the force required to achieve penetration or a blow count, when driving is necessary, is recommended as supplemental information.

D 3665 Standard Practice for Random Sampling of Construction Materials

This practice covers the determination of random locations (or timing) at which samples of construction materials can be taken. For the exact physical procedures for securing the sample, such as a description of the sampling tool, the number of increments needed for a sample, or the size of the sample, reference should be made to the appropriate standard method.

D 3975 Standard Practice for Development and Use (Preparation) of Samples for Collaborative Testing of Methods for Analysis of Sediments

This practice establishes uniform general procedures for the development, preparation, and use of samples in the collaborative testing of methods for chemical analysis of sediments and similar materials. The principles of this practice are applicable to aqueous samples with suitable technical modifications.

EPAPAV0054546

D 3976 Standard Practice for Preparation of Sediment Samples for Chemical Analysis

This practice describes standard procedures for preparing test samples (including the removal of occluded water and moisture) of field samples collected from locations such as streams, rivers, ponds, lakes, and oceans. These procedures are applicable to the determination of volatile, semivolatile, and nonvolatile constituents of sediments.

D 3694 Standard Practices for Preparation of Sample Containers and for Preservation of Organic Constituents

These practices cover the various means of (1) preparing sample containers used for collection of waters to be analyzed for organic constituents and (2) preservation of such samples from the time of sample collection until the time of analysis. The sample preservation practice depends on the specific analysis to be conducted. Preservation practices are listed with the corresponding applicable general and specific constituent test method. The preservation method for waterborne oils is given in Practice D 3325. Use of the information given will make it possible to choose the minimum number of sample preservation practices necessary to ensure the integrity of a sample designated for multiple analysis.

D 4136 Standard Practice for Sampling Phytoplankton with Water-Sampling Bottles

This practice covers the procedures for obtaining quantitative samples of a phytoplankton community by the use of water-sampling bottles.

D 4220 Standard Practices for Preserving and Transporting Soil Samples

These practices cover procedures for preserving soil samples immediately after they are obtained in the field and accompanying procedures for transporting and handling the samples. These practices are not intended to address requirements applicable to transporting of soil samples known or suspected to contain hazardous materials.

D 4342 Standard Practice for Collecting of Benthic Macroinvertebrates with Ponar Grab Sampler

This practice covers the procedures for obtaining qualitative or quantitative samples of macroinvertebrates inhabiting a wide range of bottom substrate types (e.g., coarse sand, fine gravel, clay, mud, marl, and similar substrates. The Ponar grab sampler is used in freshwater lakes, rivers, estuaries, reservoirs, oceans, and similar habitats.

D 4343 Standard Practice for Collecting Benthic Macroinvertebrates with Ekman Grab Sampler

This practice covers the procedures for obtaining qualitative or quantitative samples of macroinvertebrates inhabiting soft sediments. The Ekman grab sampler is used in freshwater lakes, reservoirs, and, usually, small bodies of water.

EPAPAV0054547

D 4387 Standard Guide for Selecting Grab Sampling Devices for Collecting Benthic Macroinvertebrates

This guide covers the selection of grab sampling devices for collecting benthic macroinvertebrates. Qualitative and quantitative samples of macroinvertebrates in sediments or substrates are usually taken by grab samplers. The guide discusses the advantages and limitations of the Ponar, Peterson, Ekman and other grab samplers.

D 4411 Standard Guide for Sampling Fluvial Sediment in Motion

This guide covers the equipment and basic procedures for sampling to determine discharge of sediment transported by moving liquids. Equipment and procedures were originally developed to sample mineral sediments transported by rivers but they also are applicable to sampling a variety of sediments transported in open channels or closed conduits. Procedures do not apply to sediments transported by flotation. This guide does not pertain directly to sampling to determine nondischarge-weighted concentrations, which in special instances are of interest. However, much of the descriptive information on sampler requirements and sediment transport phenomena is applicable in sampling for these concentrations and the guide briefly specifies suitable equipment.

D 4448 Standard Guide for Sampling Groundwater Monitoring Wells

This guide covers procedures for obtaining valid representative samples from ground-water monitoring wells. The scope is limited to sampling and "in the field" preservation and does not include well location, depth, well development, design and construction, screening, or analytical procedures. This guide provides a review of many of the most commonly used methods for sampling ground-water quality monitoring wells and is not intended to serve as a ground-water monitoring plan for any specific application. Because of the large and ever-increasing number of options available, no single guide can be viewed as comprehensive. The practitioner must make every effort to ensure that the methods used, whether or not they are addressed in this guide, are adequate to satisfy the monitoring objectives at each site.

D 4489 Standard Practices for Sampling of Waterborne Oils

These practices describe the procedures to be used in collecting samples of waterborne oils, oil found on adjoining shorelines, or oil-soaked debris, for comparison of oils by spectroscopic and chromatographic techniques, and for elemental analyses. Two practices are described. Practice A involves "grab sampling" macro oil samples. Practice B involves sampling most types of waterborne oils and is particularly applicable in sampling thin oil films or slicks. Practice selection will be dictated by the physical characteristics and the location of the spilled oil. Specifically, the two practices are (1) Practice A, for grab sampling thick layers of oil, viscous oils or oil soaked debris, oil globules, tar balls, or stranded oil, and (2) Practice B, for TFE-fluorocarbon polymer strip samplers. Each of the two practices collect oil samples with a minimum of water, thereby reducing the possibility of chemical, physical, or biological alteration by prolonged contact with water between the time of collection and analysis.

EPAPAV0054548

D 4547 Standard Guide for Sampling Waste and Soils for Volatile Organic Compounds

This guide describes recommended procedures for the collection, handling, and preparation of solid waste, soil, and sediment subsamples for subsequent determination of volatile organic compounds (VOCs). This class of compounds includes low molecular weight aromatics, hydrocarbons, halogenated hydrocarbons, ketones, acetates, nitriles, acrylates, ethers, and sulfides with boiling points below 200°C that are insoluble or slightly soluble in water. Methods of subsample collection, handling, and preparation for analysis are described. This guide does not cover the details of sampling design, laboratory preparation of containers, and the analysis of the subsamples.

D 4687 Standard Guide for General Planning of Waste Sampling

This guide provides information for formulating and planning the many aspects of waste sampling that are common to most waste-sampling situations. This guide addresses the following aspects of sampling: Sampling plans, safety plans, quality assurance considerations, general sampling considerations, preservation and containerization, cleaning equipment, labeling and shipping procedures, and chain-of-custody procedures. This guide does not provide comprehensive sampling procedures for these aspects, nor does it serve as a guide to any specific application.

D 4696 Standard Guide for Pore-Liquid Sampling from the Vadose Zone

This guide discusses equipment and procedures used for sampling pore-liquid from the vadose zone (unsaturated zone). The guide is limited to *in-situ* techniques and does not include soil core collection and extraction methods for obtaining samples. The term "pore-liquid" is applicable to any liquid from aqueous pore-liquid to oil, however, all of the samplers described in this guide are designed to sample aqueous pore-liquids only. The abilities of these samplers to collect other pore-liquids may be quite different than those described. Some of the samplers described in the guide currently are not commercially available. These samplers are presented because they may have been available in the past, and may be encountered at sites with established vadose zone monitoring programs. In addition, some of these designs are particularly suited to specific situations. If needed, these samplers could be fabricated.

D 4700 Standard Guide for Soil Sampling from the Vadose Zone

This guide addresses procedures that may be used for obtaining soil samples from the vadose zone (unsaturated zone). Samples can be collected for a variety of reasons, including the following:

- Stratigraphic description
- Hydraulic conductivity testing
- Moisture content measurement
- Moisture release curve construction
- Geotechnical testing
- Soil gas analyses
- Microorganism extraction
- Pore-liquid and soil chemical analyses.

EPAPAV0054549

This guide focuses on methods that provide soil samples for chemical analyses of the soil or contained liquids or contaminants. Comments on how methods may be modified for other objectives, however, also are included. This guide does not describe sampling methods for lithified deposits and rocks (e.g., sandstone, shale, tuff, granite).

D 4823 Standard Guide for Core Sampling Submerged, Unconsolidated Sediments

This guide covers core-sampling terminology, advantages and disadvantages of various core samplers, core distortions that may occur during sampling, techniques for detecting and minimizing core distortions, and methods for dissecting and preserving sediment cores. In this guide, sampling procedures and equipment are divided into the following categories (based on water depth): sampling in depths shallower than 0.5 m, sampling in depths between 0.5 m and 10 m, and sampling in depths exceeding 10 m. Each category is divided into two sections: (1) equipment for collecting short cores and (2) equipment for collecting long cores. This guide also emphasizes general principles. Only in a few instances are step-by-step instructions given. Because core sampling is a field-based operation, methods and equipment usually must be modified to suit local conditions. Drawings of samplers are included to show sizes and proportions. These samplers are offered primarily as examples (or generic representations) of equipment that can be purchased commercially or built from plans in technical journals. This guide is a brief summary of published scientific articles and engineering reports, and the references are listed. These documents provide operational details that are not given in the guide but are nevertheless essential to the successful planning and completion of core sampling projects.

D 4840 Standard Guide for Sampling Chain-of-Custody Procedures

This guide contains a comprehensive discussion of potential requirements for a sample chain-of-custody program and describes the procedures involved in sample chain-of-custody. The purpose of these procedures is to provide accountability for and documentation of sample integrity from the time of sample collection until sample disposal. These procedures are intended to document sample possession during each stage of a sample's life cycle, that is, during collection, shipment, storage, and the process of analysis. Sample chain of custody is just one aspect of the larger issue of data defensibility. A sufficient chain-of-custody process (i.e., one that provides sufficient evidence of sample integrity in a legal or regulatory setting) is situationally dependent. The procedures presented in this guide are generally considered sufficient to assure legal defensibility of sample integrity. In a given situation, less stringent measures may be adequate. It is the responsibility of the users of this guide to determine their exact needs. Legal counsel may be needed to make this determination.

D 4854 Standard Guide for Estimating the Magnitude of Variability from Expected Sources in Sampling Plans

The guide explains how to estimate the contributions of the variability of lot sampling units, laboratory sampling units, and specimens to the variation of the test result of a sampling plan. The guide explains how to combine the estimates of the variability from the three sources to obtain an estimate of the variability of the sampling plan results. The guide is applicable to all sampling plans that produce variables data. It is not applicable to plans that produce attribute data, since such plans do not take specimens in stages, but require that specimens be taken at random from all of the individual items in the lot.

D 4916 Standard Practice for Mechanical Auger Sampling

This practice describes procedures for the collection of an increment, partial sample, or gross sample of material using mechanical augers. Reduction and division of the material by mechanical equipment at the auger also is covered.

D 5013 Standard Practices for Sampling Wastes from Pipes and Other Point Discharges

These practices provide guidance for obtaining samples of waste at discharge points from pipes, sluiceways, conduits, and conveyor belts. The following are included: Practice A – Liquid or Slurry Discharges, and Practice B – Solid or Semisolid Discharges. These practices are intended for situations in which there are no other applicable ASTM sampling methods for the specific industry. These practices do not address flow and time-proportional samplers and other automatic sampling devices. Samples are taken from a flowing waste stream or moving waste mass and, therefore, are descriptive only within a certain period. The length of the period for which a sample is descriptive will depend on the sampling frequency and compositing scheme.

D 5088 Standard Practice for Decontamination of Field Equipment Used at Nonradioactive Waste Sites

This practice covers the decontamination of field equipment used in the sampling of soils, soil gas, sludges, surface water, and ground water at waste sites that are to undergo both physical and chemical analyses. This practice is applicable only at sites at which chemical (organic and inorganic) wastes are a concern and is not intended for use at radioactive or mixed (chemical and radioactive) waste sites. Procedures are included for the decontamination of equipment that comes into contact with the sample matrix (sample contacting equipment) and for ancillary equipment that has not contacted the portion of sample to be analyzed (nonsample contacting equipment). This practice is based on recognized methods by which equipment may be decontaminated. When collecting environmental matrix samples, one should become familiar with the site-specific conditions. Based on these conditions and the purpose of the sampling effort, the most suitable method of decontamination can be selected to maximize the integrity of analytical and physical testing results. This practice is applicable to most conventional sampling equipment constructed of metallic and synthetic materials. The manufacturer of a specific sampling apparatus should be contacted if there is concern regarding the reactivity of a decontamination rinsing agent with the equipment.

D 5092 Standard Practice for Design and Installation of Ground Water Monitoring Wells in Aquifers

This practice addresses the selection and characterization (by defining soil, rock types, and hydraulic gradients) of the target monitoring zone as an integral component of monitoring well design and installation. The development of a conceptual hydrogeologic model for the intended monitoring zone(s) is recommended prior to the design and installation of a monitoring well. The guidelines are based on recognized methods by which monitoring wells may be designed and installed for the purpose of detecting the presence or absence of a contaminant, and collecting representative ground water quality data. The design standards and installation procedures in the practice are applicable to both detection and assessment monitoring programs for facilities. The recommended monitoring well design, as presented in this practice,

is based on the assumption that the objective of the program is to obtain representative ground-water information and water quality samples from aquifers. Monitoring wells constructed following this practice should produce relatively turbidity-free samples for granular aquifer materials ranging from gravels to silty sand and sufficiently permeable consolidated and fractured strata. Strata having grain sizes smaller than the recommended design for the smallest diameter filter pack materials should be monitored by alternative monitoring well designs not addressed by this practice.

D 5283 Standard Practice for Generation of Environmental Data Related to Waste Management Activities Quality Assurance and Quality Control Planning and Implementation

This practice addresses the planning and implementation of the sampling and analysis aspects of environmental data generation activities. It defines the criteria that must be considered to assure the quality of the field and analytical aspects of environmental data generation activities. Environmental data include, but are not limited to, the results from analyses of samples of air, soil, water, biota, waste, or any combinations thereof. DQOs should be adopted prior to application of this practice. Data generated in accordance with this practice are subject to a final assessment to determine whether the DQOs were met. For example, many screening activities do not require all of the mandatory quality assurance and quality control steps found in this practice to generate data adequate to meet the project DQOs. The extent to which all of the requirements must be met remains a matter of technical judgment as it relates to the established DQOs. This practice presents extensive management requirements designed to ensure high-quality environmental data.

D 5314 Standard Guide for Soil Gas Monitoring in the Vadose Zone

This guide covers information pertaining to a broad spectrum of practices and applications of soil atmosphere sampling, including sample recovery and handling, sample analysis, data interpretation, and data reporting. This guide can increase the awareness of soil gas monitoring practitioners concerning important aspects of the behavior of the soil-water-gas contaminant system in which this monitoring is performed, as well as inform them of the variety of available techniques of each aspect of the practice. Appropriate applications of soil gas monitoring are identified, as are the purposes of the various applications. Emphasis is placed on soil gas contaminant determinations in certain application examples. This guide suggests a variety of approaches useful in monitoring vadose zone contaminants with instructions that offer direction to those who generate and use soil gas data. This guide does not recommend a standard practice to follow in all cases, nor does it recommend definite courses of action. The success of any one soil gas monitoring methodology is strongly dependent upon the environment in which it is applied.

D 5358 Standard Practice for Sampling with a Dipper or Pond Sampler

This practice describes the procedure and equipment for taking surface samples of water or other liquids using a dipper. A pond sampler or dipper with an extension handle allows the operator to sample streams, ponds, waste pits, and lagoons as far as 15 feet from the bank or other secure footing. The dipper is useful in filling a sample bottle without contaminating the outside of the bottle.

D 5387 Standard Guide for Elements of a Complete Data Set for Non-Cohesive Sediments

This guide covers criteria for a complete sediment data set, and it provides guidelines for the collection of non-cohesive sediment alluvial data. This guide describes what parameters should be measured and stored to obtain a complete sediment and hydraulic data set that could be used to compute sediment transport using any prominently known sediment-transport equations.

D 5451 Standard Practice for Sampling Using a Trier Sampler

This practice covers sampling using a trier. A trier resembles an elongated scoop, and is used to collect samples of granular or powdered materials that are moist or sticky and have a particle diameter less than one-half the diameter of the trier. The trier can be used as a vertical coring device only when it is certain that a relatively complete and cylindrical sample can be extracted.

D 5495 Standard Practice for Sampling with a Composite Liquid Waste Sampler (COLIWASA)

This practice describes the procedure for sampling liquids with the composite liquid waste sampler (COLIWASA). The COLIWASA is an appropriate device for obtaining a representative sample from stratified or unstratified liquids. Its most common use is for sampling containerized liquids, such as tanks, barrels, and drums. It may also be used for pools and other open bodies of stagnant liquid. (A limitation of the COLIWASA is that the stopper mechanism may not allow collection of approximately the bottom inch of material, depending on construction of the stopper.) The COLIWASA should not be used to sample flowing or moving liquids.

D 5608 Standard Practice for Decontamination of Field Equipment Used at Low Level Radioactive Waste Sites

This practice covers the decontamination of field equipment used in the sampling of soils, soil gas, sludges, surface water, and ground water at waste sites known or suspected of containing low-level radioactive wastes. This practice is applicable at sites where low-level radioactive wastes are known or suspected to exist. By itself or in conjunction with Practice D 5088, this practice may also be applicable for the decontamination of equipment used in the vicinity of known or suspected transuranic or mixed wastes. Procedures are contained in this practice for the decontamination of equipment that comes into contact with the sample matrix (sample contacting equipment), and for ancillary equipment that has not contacted the sample, but may have become contaminated during use (noncontacting equipment). This practice is applicable to most conventional sampling equipment constructed of metallic and hard and smooth synthetic materials. Materials with rough or porous surfaces, or having a high sorption rate, should not be used in radioactive-waste sampling due to the difficulties with decontamination. In those cases in which sampling will be periodically performed, such as sampling of wells, consideration should be given to the use of dedicated sampling equipment if legitimate concerns exist for the production of undesirable or unmanageable waste byproducts, or both, during the decontamination of tools and equipment. This practice does not address regulatory requirements for personnel protection or decontamination, or for the handling, labeling, shipping, or storing of wastes, or samples. Specific radiological release requirements and limits must be determined by users in accordance with local, State and Federal regulations.

D 5633 Standard Practice for Sampling with a Scoop

This procedure covers the method and equipment used to collect surface and near-surface samples of soils and physically similar materials using a scoop. This practice is applicable to rapid screening programs, pilot studies, and other semi-quantitative investigations. The practice describes how a shovel is used to remove the top layers of soil to the appropriate sample depth and either a disposable scoop or a reusable scoop is used to collect and place the sample in the sample container.

D 5658 Standard Practice for Sampling Unconsolidated Waste from Trucks

This practice covers several methods for collecting waste samples from trucks. These methods are adapted specifically for sampling unconsolidated solid wastes in bulk loads using several types of sampling equipment.

D 5679 Standard Practice for Sampling Consolidated Solids in Drums or Similar Containers

This practice covers typical equipment and methods for collecting samples of consolidated solids in drums or similar containers. These methods are adapted specifically for sampling drums having a volume of 110 U.S. gallons (416 L) or less, and are applicable to a hazardous material, product, or waste.

D 5680 Standard Practice for Sampling Unconsolidated Solids in Drums or Similar Containers

This practice covers typical equipment and methods for collecting samples of unconsolidated solids in drums or similar containers. These methods are adapted specifically for sampling drums having a volume of 110 U.S. gallons (416 L) or less, and are applicable to a hazardous material, product, or waste.

D 5730 Standard Guide for Site Characterization for Environmental Purposes with Emphasis on Soil, Rock, the Vadose Zone and Ground Water

This guide covers a general approach to planning field investigations that is useful for any type of environmental investigation with a primary focus on the subsurface and major factors affecting the surface and subsurface environment. Generally, such investigations should identify and locate, both horizontally and vertically, significant soil and rock masses and ground-water conditions present within a given site area and establish the characteristics of the subsurface materials by sampling or *in situ* testing, or both. The extent of characterization and specific methods used will be determined by the environmental objectives and data quality requirements of the investigation. This guide focuses on field methods for determining site characteristics and collection of samples for further physical and chemical characterization. It does not address special considerations required for characterization of karst and fractured rock terrain.

EPAPAV0054554

D 5743 Standard Practice for Sampling Single or Multilayered Liquids, with or without Solids, in Drums or Similar Containers

This practice covers typical equipment and methods for collecting samples of single or multilayered liquids, with or without solids, in drums or similar containers. These methods are adapted specifically for sampling drums having a volume of 110 gallons (416 L) or less, and are applicable to a hazardous material, product, or waste.

D 5792 Standard Practice for Generation of Environmental Data Related to Waste Management Activities: Development of Data Quality Objectives

This practice covers the development of data quality objectives (DQOs) for the acquisition of environmental data. Optimization of sampling and analysis design is a part of the DQO Process. This practice describes the DQO Process in detail. The various strategies for design optimization are too numerous to include in this practice. Many other documents outline alternatives for optimizing sampling and analysis design, therefore, only an overview of design optimization is included. Some design aspects are included in the examples for illustration purposes.

D 5903 Standard Guide for Planning and Preparing for a Groundwater Sampling Event

This guide covers planning and preparing for a ground-water sampling event. It includes technical and administrative considerations and procedures. Example checklists are also provided as appendices. This guide may not cover every consideration and procedure that is necessary before all ground-water sampling projects. This guide focuses on sampling of ground water from monitoring wells; however, most of the guidance herein can apply to the sampling of springs as well.

D 5911 Standard Practice for Minimum Set of Data Elements to Identify a Soil Sampling Site

This practice covers what information should be obtained to uniquely identify any soil sampling or examination site where an absolute and recoverable location is necessary for quality control of the study, such as for a waste disposal project. The minimum set of data elements was developed considering the needs for informational data bases, such as geographic information systems. Other distinguishing details, such as individual site characteristics, help in singularly cataloging the site. For studies that are not environmentally regulated, such as for an agricultural or preconstruction survey, the data specifications established by a client and the project manager may be different from that of the minimum set. As used in this practice, a soil sampling site is meant to be a single point, not a geographic area or property, located by an X, Y, and Z coordinate position at land surface or a fixed datum. All soil data collected for the site are directly related to the coordinate position, e.g., a sample is collected from a certain number of feet (or meters) or sampled from a certain interval to feet (or meters) below the X, Y, and Z coordinate position. A soil sampling site can include a test well, augered or bored hole, excavation, grab sample, test pit, sidewall sample, stream bed, or any other site where samples of the soil can be collected or examined for the purpose intended. Samples of soil (sediment) filtered from the water of streams, rivers, or lakes are not in the scope of this practice.

EPAPAV0054555

D 5956 Standard Guide for Sampling Strategies for Heterogeneous Wastes

This guide is a practical nonmathematical discussion for heterogeneous waste sampling strategies. This guide is consistent with the particulate material sampling theory, as well as inferential statistics, and may serve as an introduction to the statistical treatment of sampling issues. This guide does not provide comprehensive sampling procedures, nor does it serve as a guide to any specification.

D 6001 Standard Guide for Direct-Push Water Sampling for Geoenvironmental Investigations

This guide reviews methods for sampling ground water at discrete points or in increments by insertion of sampling devices by static force or impact without drilling and removal of cuttings. By directly pushing the sampler, the soil is displaced and helps to form an annular seal above the sampling zone. Direct-push water sampling can be one-time or multiple-sampling events. Methods for obtaining water samples for water quality analysis and detection of contaminants are presented. Field test methods described in this guide include installation of temporary well points and insertion of water samplers using a variety of insertion methods. The insertion methods include (1) soil probing using combinations of impact, percussion, or vibratory driving with or without additions of smooth static force; (2) smooth static force from the surface using hydraulic penetrometer or drilling equipment and incremental drilling combined with direct-push water sampling events. Methods for borehole abandonment by grouting are also addressed.

D 6008 Standard Practice for Conducting Environmental Baseline Surveys

The purpose of this practice is to define good commercial and customary practice in the United States for conducting an environmental baseline survey (EBS). Such surveys are conducted to determine certain elements of the environmental condition of Federal real property, including excess and surplus property at closing and realigning military installations. This effort is conducted to fulfill certain requirements of the Comprehensive Environmental Response Compensation and Liability Act of 1980 (CERCLA) section 120(h), as amended by the Community Environmental Response Facilitation Act of 1992 (CERFA). As such, this practice is intended to help a user to gather and analyze data and information in order to classify property into seven environmental condition of property area types (in accordance with the Standard Classification of Environmental Condition of Property Area Types). Once documented, the EBS is used to support Findings of Suitability to Lease, or uncontaminated property determinations, or a combination thereof, pursuant to the requirements of CERFA. Users of this practice should note that it does not address (except where explicitly noted) requirements of CERFA. The practice also does not address (except where explicitly noted) requirements for appropriate and timely regulatory consultation or concurrence, or both, during the conduct of the EBS or during the identification and use of the standard environmental condition of property area types.

D 6009 Standard Guide for Sampling Waste Piles

This guide provides guidance for obtaining representative samples from waste piles. Guidance is provided for site evaluation, sampling design, selection of equipment, and data interpretation. Waste piles include areas used primarily for waste storage or disposal, including above-grade dry land disposal units. This guide can be applied to sampling municipal waste piles, and it addresses how the choice of sampling design and sampling methods depends on specific

features of the pile.

D 6044 Standard Guide for Representative Sampling for Management of Waste and Contaminated Media

This guide covers the definition of representativeness in environmental sampling, identifies sources that can affect representativeness (especially bias), and describes the attributes that a representative sample or a representative set of samples should possess. For convenience, the term "representative sample" is used in this guide to denote both a representative sample and a representative set of samples, unless otherwise qualified in the text. This guide outlines a process by which a representative sample may be obtained from a population, and it describes the attributes of a representative sample and presents a general methodology for obtaining representative samples. It does not, however, provide specific or comprehensive sampling procedures. It is the user's responsibility to ensure that proper and adequate procedures are used.

D 6051 Standard Guide for Composite Sampling and Field Subsampling for Environmental Waste Management Activities

This guide discusses the advantages and appropriate use of composite sampling, field procedures and techniques to mix the composite sample and procedures to collect an unbiased and precise subsample from a larger sample. Compositing and subsampling are key links in the chain of sampling and analytical events that must be performed in compliance with project objectives and instructions to ensure that the resulting data are representative. This guide discusses the advantages and limitations of using composite samples in designing sampling plans for characterization of wastes (mainly solid) and potentially contaminated media. This guide assumes that an appropriate sampling device is selected to collect an unbiased sample. It does not address where samples should be collected (depends on the objectives), selection of sampling equipment, bias introduced by selection of inappropriate sampling equipment, sample collection procedures or collection of a representative specimen from a sample, or statistical interpretation of resultant data and devices designed to dynamically sample process waste streams. It also does not provide sufficient information to statistically design an optimized sampling plan, or to determine the number of samples to collect or to calculate the optimum number of samples to composite to achieve specified data quality objectives. The mixing and subsampling described in this guide is expected to cause significant losses of volatile constituents. Specialized procedures should be used for compositing samples for determination of volatiles.

D 6063 Standard Guide for Sampling of Drums and Similar Containers by Field Personnel

This guide covers information, including flow charts, for field personnel to follow in order to collect samples from drums and similar containers. The purpose of this guide is to help field personnel in planning and obtaining samples from drums and similar containers, using equipment and techniques that will ensure that the objectives of the sampling activity will be met. It can also be used as a training tool.

D 6169 Standard Guide for Selection of Soil and Rock Sampling Devices Used With Drill Rigs for Environmental Investigations

This guide covers the selection of soil and rock sampling devices used with drill rigs for the purpose of characterizing *in situ* physical and hydraulic properties, chemical characteristics, subsurface lithology, stratigraphy, and structure, and hydrogeologic units in environmental investigations.

D 6232 Standard Guide for Selection of Sampling Equipment for Waste and Contaminated Media Data Collection Activities

This guide covers criteria that should be considered when selecting sampling equipment for collecting environmental and waste samples for waste management activities. This guide includes a list of equipment that is used and is readily available. Many specialized sampling devices are not specifically included in this guide, however, the factors that should be weighed when choosing any piece of equipment are covered and remain the same for the selection of any piece of equipment. Sampling equipment described in this guide include automatic samplers, pumps, bailers, tubes, scoops, spoons, shovels, dredges, and coring and augering devices. The selection of sampling locations is outside the scope of this guide.

D 6233 Standard Guide for Data Assessment for Environmental Waste Management Activities

This guide covers a practical strategy for examining an environmental project data collection effort and the resulting data to determine conformance with the project plan and impact on data usability. This guide also leads the user through a logical sequence to determine which statistical protocols should be applied to the data.

D 6250 Standard Practice for Derivation of Decision Point and Confidence Limit for Statistical Testing of Mean Concentration in Waste Management Decisions

This practice covers a logical basis for the derivation of a decision point and confidence limit when the mean concentration is used for making environmental waste management decisions. The determination of a decision point or confidence limit should be made in the context of the defined problem. The main focus of this practice is on the determination of a decision point. In environmental management decisions, the derivation of a decision point allows a direct comparison of a sample mean against this decision point. Similar decisions can be made by comparing a confidence limit against a concentration limit. This practice focuses on making environmental decisions using this kind of statistical comparison. Other factors, such as any qualitative information that also may be important to decision making, are not considered in the practice. This standard derives the decision point and confidence limit in the framework of a statistical test of hypothesis under three different presumptions. The relationship between decision point and confidence limit also is described.

D 6282 Standard Guide for Direct Push Soil Sampling for Environmental Site Characterizations

This guide addresses direct push soil samplers, which may be driven into the ground from the surface or through pre-bored holes. The samplers can be continuous or discrete interval

EPAPAV0054558

units. The samplers are advanced to the depth of interest by a combination of static push, or impacts from hammers, or vibratory methods, or a combination thereof. Field methods described in this guide include the use of discreet and continuous sampling tools, split and solid barrel samplers and thin walled tubes with or without fixed piston style apparatus. Insertion methods described include static push, impact, percussion, other vibratory/sonic driving, and combinations of these methods using direct push equipment adapted to drilling rigs, cone penetrometer units, and specially designed percussion/direct push combination machines. Hammers described by this guide for providing force for insertion include drop style, hydraulically activated, air activated and mechanical lift devices. The guide does not cover open chambered samplers operated by hand such as augers, agricultural samplers operated at shallow depths, or side wall samplers.

D 6286 Standard Guide for Selection of Drilling Methods for Environmental Site Characterization

This guide provides descriptions of various drilling methods for environmental site characterization, along with the advantages and disadvantages associated with each method. This guide is intended to aid in the selection of drilling method(s) for environmental soil and rock borings and the installation of monitoring wells and other water-quality monitoring devices. This guide does not address methods of well construction, well development, or well completion.

D 6311 Standard Guide for Generation of Environmental Data Related to Waste Management Activities: Selection and Optimization of Sampling Design

This guide provides practical information on the selection and optimization of sample designs in waste management sampling activities, within the context of the requirements established by the data quality objectives or other planning process. Specifically, this document provides (1) guidance for the selection of sampling designs; (2) techniques to optimize candidate designs; and (3) descriptions of the variables that need to be balanced in choosing the final optimized design.

D 6323 Standard Guide for Laboratory Subsampling of Media Related to Waste Management Activities

This guide covers common techniques for obtaining representative subsamples from a sample received at a laboratory for analysis. These samples may include solids, sludges, liquids, or multilayered liquids (with or without solids). The procedures and techniques discussed in this guide depend upon the sample matrix, the type of sample preparation and analysis performed, the characteristic(s) of interest, and the project specific instructions or data quality objectives. This guide includes several sample homogenization techniques, including mixing and grinding, as well as information on how to obtain a specimen or split laboratory samples. This guide does not apply to air or gas sampling.

D 6418 Standard Practice for Using the Disposable EnCore™ Sampler for Sampling and Storing Soil for Volatile Organic Analysis

This practice provides a procedure for using the disposable EnCore™ sampler to collect and store a soil sample of approximately 5 grams or 25 grams for volatile organic analysis. The EnCore™ sampler is designed to collect and hold a soil sample during shipment to the

laboratory. It consists of a coring body/storage chamber, O-ring sealed plunger, and O-ring sealed cap. In performing the practice, the integrity of the soil sample structure is maintained and there is very limited exposure of the sample to the atmosphere. Laboratory subsampling is not required; the sample is expelled directly from the sampler body into the appropriate container for analysis.

D 6538 Standard Guide for Sampling Wastewater With Automatic Samplers

This guide covers the selection and use of automatic wastewater samplers including procedures for their use in obtaining representative samples. Automatic wastewater samplers are intended for the unattended collection of samples that are representative of the parameters of interest in the wastewater body. While this guide primarily addresses the sampling of wastewater, the same automatic samplers may be used to sample process streams and natural water bodies.

D 6582 Standard Guide for Ranked Set Sampling: Efficient Estimation of a Mean Concentration in Environmental Sampling

This guide describes ranked set sampling, discusses its relative advantages over simple random sampling, and provides examples of potential applications in environmental sampling. Ranked set sampling is useful and cost-effective when there is an auxiliary variable, which can be inexpensively measured relative to the primary variable, and when the auxiliary variable has correlation with the primary variable. The resultant estimation of the mean concentration is unbiased, more precise than simple random sampling, and more representative of the population under a wide variety of conditions.

D 6771 Standard Practice for Low-Flow Purging and Sampling for Wells and Devices Used for Ground-Water Quality Investigations

This practice covers the method for purging and sampling wells and devices used for ground-water quality investigations and monitoring programs known as low-flow purging and sampling. The method is also known by the terms minimal drawdown purging or low-stress purging. The method could be used for other types of ground-water sampling programs but these uses are not specifically addressed in this practice. This practice applies only to wells sampled at the wellhead. This practice does not address sampling of wells containing either light or dense non-aqueous-phase liquids (LNAPLs or DNAPLs).

E 122 Standard Practice for Choice of Sample Size to Estimate the Average for a Characteristic of a Lot or Process

This practice covers methods for calculating the sample size (the number of units to include in a random sample from a lot of material) in order to estimate, with a prescribed precision, an average of some characteristic for that lot or process. The characteristic may be either a numerical value of some property or the fraction of nonconforming units with respect to an attribute. If sampling from a process, the process must be in a state of statistical control for the results to have predictive value.

E 178 Standard Practice for Dealing with Outlying Observations

This practice covers outlying observations in samples and how to test the statistical significance

EPAPAV0054560

of them. An outlying observation, or "outlier," is an observation that appears to deviate markedly from other members of the sample in which it occurs. An outlying observation may be merely an extreme manifestation of the random variability inherent in the data. If this is true, the value should be retained and processed in the same manner as the other observations in the sample. On the other hand, an outlying observation may be the result of gross deviation from prescribed experimental procedure or an error in calculating or recording the numerical value. In such cases, it may be desirable to institute an investigation to ascertain the reason for the aberrant value. The observation may even actually be rejected as a result of the investigation, though not necessarily so. At any rate, in subsequent data analysis the outlier or outliers probably will be recognized as being from a different population than that of the other sample values. The procedures covered herein apply primarily to the simplest kind of experimental data; that is, replicate measurements of some property of a given material, or observations in a supposedly single random sample. Nevertheless, the tests suggested do cover a wide enough range of cases in practice to have broad utility.

E 300 Standard Practice for Sampling Industrial Chemicals

This practice covers procedures for sampling several classes of industrial chemicals, as well as recommendations for determining the number and location of such samples to ensure representativeness in accordance with accepted probability sampling principles. Although this practice describes specific procedures for sampling various liquids, solids, and slurries, in bulk or in packages, these recommendations only outline the principles to be observed. They should not take precedence over specific sampling instructions contained in other ASTM product or method standards.

E 1402 Standard Terminology Relating to Sampling

This standard includes those items related to statistical aspects of sampling. It is applicable to sampling in any matrix and provides definitions, descriptions, discussions, and comparisons of trends.

E 1727 Standard Practice for Field Collection of Soil Samples for Lead Determination by Atomic Spectrometry Techniques

This practice covers the collection of soil samples using coring and scooping methods. Soil samples are collected in a manner that will permit subsequent digestion and determination of lead using laboratory analysis techniques such as Inductively Coupled Plasma Atomic Emission Spectrometry (ICP-AES), Flame Atomic Absorption Spectrometry (FAAS), and Graphite Furnace Atomic Absorption Spectrometry (GFAAS).

F 301 Standard Practice for Open Bottle Tap Sampling of Liquid Streams

This practice covers a general method to take samples of liquid streams in such a way so that the samples are representative of the liquid in the sampled stream and that the sample acquisition process does not interfere with any operations taking place in the stream. The practice is particularly applicable for sampling the feed and filtrate streams around a filter medium. The practice includes consideration of potential limits in the sample size or sample flow rate observation capability of the device used to measure particle content in the sample.

REFERENCES

Note: Due to the dynamic nature of the Internet, the location and content of World Wide Web sites given in this document may change over time. If you find a broken link to an EPA document, use the search engine at http://www. epa.gov/ to find the document. Links to web sites outside the U.S. EPA web site are provided for the convenience of the user, and the U.S. EPA does not exercise any editorial control over the information you may find at these external web sites.

Air Force Center for Environmental Excellence (AFCEE). 1995. "Disposal of Construction and Demolition Debris." Pro-Act Fact Sheet TI5040. Brooks Air Force Base, TX.

American Society for Quality (ASQ). 1988. *Sampling Procedures and Tables for Inspection of Isolated Lots by Attributes*. American National Standard ANSI/ASQC Standard Q3-1988. Milwaukee, Wisconsin.

ASQ. 1993. *Sampling Procedures and Tables for Inspection By Attributes*. American National Standard ANSI/ASQC Z1.4-1993. Milwaukee, Wisconsin.

American Society for Testing and Materials (ASTM) D 1452-80. 1980. *Standard Practice for Soil Investigation and Sampling by Auger Borings.* West Conshohocken, PA. http://www.astm.org/

ASTM D 1586-84. 1984. *Standard Test Method for Penetration Test and Split-Barrel Sampling of Soils.* West Conshohocken, PA.

ASTM D 1587-94. 1994. *Standard Practice for Thin-Walled Tube Geotechnical Sampling of Soils.* West Conshohocken, PA.

ASTM D 3665-95. 1995. *Standard Practice for Random Sampling of Construction Materials.* West Conshohocken, PA.

ASTM D 4220-95. 1995. *Standard Practices for Preserving and Transporting Soil Samples*. West Conshohocken, PA.

ASTM D 4342-84. 1984. *Standard Practice for Collecting of Benthic Macroinvertebrates with Ponar Grab Sampler*. West Conshohocken, PA.

ASTM D 4387-97. *Standard Guide for Selecting Grab Sampling Devices for Collecting Benthic Macroinvertebrates*. West Conshohocken, PA.

ASTM D 4448-85a. 1985. *Standard Guide for Sampling Groundwater Monitoring Wells.* West Conshohocken, PA.

ASTM D 4489-95. 1995. *Standard Practices for Sampling of Waterborne Oils.* West Conshohocken, PA.

ASTM D 4547-98. 1998. *Standard Guide for Sampling Waste and Soils for Volatile Organics*. West Conshohocken, PA.

References

ASTM D 4700-91. 1991. *Standard Guide for Soil Sampling from the Vadose Zone*. West Conshohocken, PA.

ASTM D 4823-95. 1995. *Standard Guide for Core Sampling Submerged, Unconsolidated Sediments*. West Conshohocken, PA.

ASTM D 4840-95. 1995. *Standard Guide for Sampling Chain-of-Custody Procedures*. West Conshohocken, PA.

ASTM D 5013-89. 1989. *Standard Practices for Sampling Wastes from Pipes and Other Point Discharges*. West Conshohocken, PA.

ASTM D 5088-90. 1990. *Standard Practice for Decontamination of Field Equipment Used at Nonradioactive Waste Sites*. West Conshohocken, PA.

ASTM D 5092-90. 1990. *Standard Practice for Design and Installation of Ground Water Monitoring Wells in Aquifers*. West Conshohocken, PA.

ASTM D 5283-92. 1992. *Standard Practice for Generation of Environmental Data Related to Waste Management Activities Quality Assurance and Quality Control Planning and Implementation*. West Conshohocken, PA.

ASTM D 5314-92. 1992. *Standard Guide for Soil Gas Monitoring in the Vadose Zone*. West Conshohocken, PA.

ASTM D 5358-93. 1993. *Standard Practice for Sampling with a Dipper or Pond Sampler*. West Conshohocken, PA.

ASTM D 5387-93. 1993. *Standard Guide for Elements of a Complete Data Set for Non-Cohesive Sediments*. West Conshohocken, PA.

ASTM D 5451-93. 1993. *Standard Practice for Sampling Using a Trier Sampler*. West Conshohocken, PA.

ASTM D 5495-94. 1994. *Standard Practice for Sampling with a Composite Liquid Waste Sampler (COLIWASA)*. West Conshohocken, PA.

ASTM D 5633-94. 1994. *Standard Practice for Sampling with a Scoop*. West Conshohocken, PA.

ASTM D 5658-95. 1995. *Standard Practice for Sampling Unconsolidated Waste from Trucks*. West Conshohocken, PA.

ASTM D 5679-95a. 1995. *Standard Practice for Sampling Consolidated Solids in Drums or Similar Containers*. West Conshohocken, PA.

ASTM D 5680-95a. 1995. *Standard Practice for Sampling Unconsolidated Solids in Drums or Similar Containers*. West Conshohocken, PA.

EPAPAV0054563

ASTM D 5730-96. 1996. *Standard Guide for Site Characterization for Environmental Purposes with Emphasis on Soil, Rock, the Vadose Zone and Ground Water*. West Conshohocken, PA.

ASTM D 5743-97. 1997. *Standard Practice for Sampling Single or Multilayered Liquids, With or Without Solids, in Drums or Similar Containers*. West Conshohocken, PA.

ASTM D 5792-95. 1995. *Standard Practice for Generation of Environmental Data Related to Waste Management Activities: Development of Data Quality Objectives*. West Conshohocken, PA.

ASTM D 5956-96. 1996. *Standard Guide for Sampling Strategies for Heterogeneous Waste*. West Conshohocken, PA.

ASTM D 6009-96. 1996. *Standard Guide for Sampling Waste Piles*. West Conshohocken, PA.

ASTM D 6044-96. 1996. *Standard Guide for Representative Sampling for Management of Waste and Contaminated Media*. West Conshohocken, PA.

ASTM D 6051-96. 1996. *Standard Guide for Composite Sampling and Field Subsampling for Environmental Waste Management Activities*. West Conshohocken, PA.

ASTM D 6063-96. 1996. *Standard Guide for Sampling of Drums and Similar Containers by Field Personnel*. West Conshohocken, PA.

ASTM D 6169-98. 1998. *Standard Guide for Selection of Soil and Rock Sampling Devices Used With Drill Rigs for Environmental Investigations*. West Conshohocken, PA.

ASTM D 6232-98. 1998. *Standard Guide for Selection of Sampling Equipment for Waste and Contaminated Media Data Collection Activities*. West Conshohocken, PA.

ASTM D 6233-98. 1998. *Standard Guide for Data Assessment for Environmental Waste Management Activities*. West Conshohocken, PA.

ASTM D 6250-98. 1998. *Standard Practice for Derivation of Decision Point and Confidence Limit for Statistical Testing of Mean Concentration in Waste Management Decisions*. West Conshohocken, PA.

ASTM D 6282-98. 1998. *Standard Guide for Direct Push Soil Sampling for Environmental Site Characterizations*. West Conshohocken, PA.

ASTM D 6286-98. 1998. *Standard Guide for Selection of Drilling Methods for Environmental Site Characterization*. West Conshohocken, PA.

ASTM D 6311-98. 1998. *Standard Guide for Generation of Environmental Data Related to Waste Management Activities: Selection and Optimization of Sampling Design*. West Conshohocken, PA.

EPAPAV0054564

References

ASTM D 6323-98. 1998. *Standard Guide for Laboratory Subsampling of Media Related to Waste Management Activities*. West Conshohocken, PA.

ASTM D 6418-99. 1999. *Standard Practice for Using the Disposable EnCore™ Sampler for Sampling and Storing Soil for Volatile Organic Analysis*. West Conshohocken, PA.

ASTM E 1727-95. 1995. *Standard Practice for Field Collection of Soil Samples for Lead Determination by Atomic Spectrometry Techniques*. West Conshohocken, PA.

Barth, D.S., B.J. Mason, T.H. Starks, and K.W. Brown. 1989. *Soil Sampling Quality Assurance User's Guide*. 2nd ed. EPA 600/8-89/046. NTIS PB89-189864. Environmental Monitoring Systems Laboratory. Las Vegas, NV.

Blacker, S. and D. Goodman. 1994a. "An Integrated Approach for Efficient Site Cleanup." *Environmental Science & Technology* 28(11).

Blacker, S. and D. Goodman. 1994b. "Case Study: Application at a Superfund Site." *Environmental Science & Technology* 28(11).

Cameron, K. 1999. Personal communication between Dr. Kirk Cameron (Statistical Scientist, MacStat Consulting, Ltd.) and Bob Stewart (Science Applications International Corporation), March 9.

Cochran, W.G. 1977. *Sampling Techniques*. 3rd ed. New York: John Wiley & Sons, Inc.

Cohen, A.C., Jr. 1959. "Simplified Estimator for the Normal Distribution When Samples Are Single Censored or Truncated." *Technometrics* 1:217-37.

Conover, W.J. 1999. *Practical Nonparametric Statistics, Third Edition*. New York: John Wiley & Sons, Inc.

Crockett, A.B., H.D. Craig, T.F. Jenkins, and W.E. Sisk. 1996. *Field Sampling and Selecting On-Site Analytical Methods For Explosives in Soil*. EPA/540/R-97/501. Office of Research and Development and Office of Solid Waste and Emergency Response. Washington, DC.

Crumbling, D.M. Current Perspectives in Site Remediation and Monitoring: Clarifying DQO Terminology Usage to Support Modernization of Site Cleanup Practice. EPA542-R-01-014. Office of Solid Waste and Emergency Response, Technology Innovation Office. October.

Department of Defense (DoD). 1996. DOD Preferred Methods for Acceptance of Product. Department of Defense Test Method Standard MIL-STD-1916 (April).

Edland, S.D. and G. van Belle. 1994. *Decreased Sampling Costs and Improved Accuracy with Composite Sampling in Environmental Statistics, Assessment and Forecasting*. Boca Raton, FL: Lewis Publishers.

Edmondson, B. 1996. "How to Spot a Bogus Poll." *American Demographics.* October.

EPAPAV0054565

Efron, B. 1981. "Nonparametric Estimates of Standard Error: The Jackknife, the Bootstrap, and Other Resampling Plans," *Biometrika. Transactions on Reliability*, 40, 547-552.

Exner, J.H., W.D. Keffer, R.O. Gilbert, and R.R. Kinnison. 1985. "A Sampling Strategy for Remedial Action at Hazardous Waste Sites: Clean-up Soil Contaminated by Tetrachlorodibenzo-p-Dioxin." *Hazardous Waste & Hazardous Materials* 2(2):503-21.

Fabrizio, M.C., A.M. Frank, and J.F. Savino. 1995. "Procedures for Formation of Composite Samples from Segmented Populations." *Environmental Science & Technology* 29(5):1137-44.

Federal Remediation Technologies Roundtable (FRTR). 1999. http://www.frtr.gov/

Filliben, J.J. 1975. "The Probability Plot Correlation Coefficient Test for Normality." *Technometrics* 17:111-17.

Flatman, G.T. and A.A. Yfantis. 1996. "Geostatistical Sampling Designs for Hazardous Waste Sites." *Principles of Environmental Sampling*. 2nd ed. L.H. Keith, ed. Washington, DC: American Chemical Society.

Garner, F.C., M.A. Stapanian, and L.R. Williams. 1988. "Composite Sampling for Environmental Monitoring." *Principles of Environmental Sampling*, L.H. Kieth, ed. Washington, DC: American Chemical Society.

Garner, F.C., M.A. Stapanian, E.A. Yfantis, and L.R. Williams. 1989. "Probability Estimation with Sample Compositing Techniques." *Journal of Official Statistics* 5(4):365-74.

Gerlach, R.W., D.E. Dobb, G.A. Raab, and J.M. Nocerino. 2002. Gy Sampling Theory in Environmental Studies. 1. Assessing Soil Splitting Protocols. *Journal of Chemometrics*. 16: 321-328. Jon Wiley & Sons, Ltd.

Gilbert, R.O. 1987. *Statistical Methods for Environmental Pollution Monitoring*. New York: Van Nostrand Reinhold.

Gilliom, R.J. and D.R. Helsel. 1986. "Estimation of Distributional Parameters for Censored Trace Level Water Quality Data: Part I Estimation Techniques." *Water Resources Research* 22(2):135-46.

Guttman, I. 1970. *Statistical Tolerance Regions: Classical and Bayesian*. London: Charles Griffin & Co.

Gy, P. 1982. *Sampling of Particulate Materials: Theory and Practice*. 2nd ed. New York: Elsevier.

Gy, P. 1998. *Sampling for Analytical Purposes*. Chichester, England: John Wiley & Sons, Inc.

Hahn, G.J. and W.Q. Meeker. 1991. *Statistical Intervals: A Guide for Practitioners*. New York: John Wiley & Sons, Inc.

EPAPAV0054566

References

Helsel, D.R. 1990. "Less than Obvious: Statistical Treatment of Data Below the Detection Limit." *Environmental Science & Technology* 24(12):1766-74.

Ingamells, C.O. and F.F. Pitard. 1986. *Applied Geochemical Analysis.* Vol. 88. New York: John Wiley.

Ingamells, C.O. 1974. "New Approaches to Geochemical Analysis and Sampling." *Talanta* 21:141-55.

Ingamells, C.O. and P. Switzer. 1973. "A Proposed Sampling Constant for Use in Geochemical Analysis." *Talanta* 20:547-68.

Isaaks, E.H. and R.M. Srivastava. 1989. *An Introduction to Applied Geostatistics*. New York: Oxford University Press.

Jenkins, T.F, C.L. Grant, G.S. Brar, P.G. Thorne, T.A. Ranney, and P.W. Schumacher. 1996. *Assessment of Sampling Error Associated with Collection and Analysis of Soil Samples at Explosives-Contaminated Sites*. Special Report 96-15. September. U.S. Army Corps of Engineers Cold Regions Research and Engineering Laboratory (USACE CRREL). Hanover, NH. http://www.crrel.usace.army.mil/techpub/CRREL_Reports/reports/SR_96_15.pdf

Jenkins, T.F., M.E. Walsh, P.G. Thorne, S. Thiboutot, G. Ampleman, T.A. Ranney, and C.L. Grant. 1997. *Assessment of Sampling Error Associated with Collection and Analysis of Soil Samples at a Firing Range Contaminated with HMX*. Special Report 97-22. September. USACE CRREL. Hanover, NH. http://www.crrel.usace.army.mil/techpub/CRREL_Reports/reports/SR_97_22.pdf

Jessen, R.J. 1978. *Statistical Survey Techniques*. New York: John Wiley & Sons, Inc.

Journel, A.G. 1988. "Non-parametric Geostatistics for Risk and Additional Sampling Assessment." *Principles of Environmental Sampling*. L.H. Keith, ed. Washington, DC: American Chemical Society.

Keith, L.H., ed. 1996. *Principles of Environmental Sampling*. 2nd ed. Washington, DC: American Chemical Society.

King, J.A. 1993. "Wastewater Sampling." *The National Environmental Journal* 3(1).

Koski, W.M., R. Troast, and W. Keffer. 1991. "Contaminated Structures and Debris–Site Remediation." In: Hazardous Materials Control/Superfund '91 - Proceedings of the 12th National Conference. Hazardous Materials Control Research Institute. Greenbelt, MD.

Land, C.E. 1971. "Confidence Intervals for Linear Functions of the Normal Mean and Variance." *The Annals of Mathematical Statistics* 42:1187-1205.

Land, C.E. 1975. "Tables of Confidence Limits for Linear Functions of the Normal Mean and Variance." In: *Selected Tables in Mathematical Statistics.* Vol III. Providence, RI: American Mathematical Society.

EPAPAV0054567

Madansky, A. 1988. *Prescription for Working Statisticians*. New York: Springer-Verlag.

Mason, B.J. 1992. *Preparation of Soil Sampling Protocols: Sampling Techniques and Strategies*. EPA/600/R-92/128. NTIS PB 92-220532. U.S. Environmental Protection Agency, Office of Research and Development. Las Vegas, NV. http://www.epa.gov/swerust1/cat/mason.pdf

McIntyre, G.A. 1952. "A Method for Unbiased Selective Sampling Using Ranked Sets." *Australian Journal of Agricultural Research* 3:385-390.

Miller, R. 1974. "The Jackknife - A Review," *Biometrika*, 61, 1-15.

Miller, R.G., Jr. 1986. *Beyond ANOVA, Basics of Applied Statistics*. New York: John Wiley & Sons.

Myers, J.C. 1997. *Geostatistical Error Management: Quantifying Uncertainty for Environmental Sampling and Mapping*. New York: Van Nostrand Reinhold.

Natrella, M.G. 1966. *Experimental Statistics*. National Bureau of Standards Handbook 91. United States Department of Commerce. Washington, DC.

Neptune, D., E.P. Brantly, M.J. Messner, and D.I. Michael. 1990. "Quantitative Decision Making in Superfund: A Data Quality Objectives Case Study." *Hazardous Materials Control* 44(2):358-63.

Newman, M.C., K.D. Greene, and P.M. Dixon. 1995. UnCensor Version 4.0. University of Georgia, Savannah River Ecology Laboratory. Aiken, SC. UnCensor is public domain software. http://www.vims.edu/env/research/risk/software/vims_software.htm

Occupational Safety and Health Administration (OSHA). 1985. *Occupational Safety and Health Guidance Manual for Hazardous Waste Site Activities*. Revised 1998. Prepared by the National Institute for Occupational Safety and Health, the Occupational Safety and Health Administration, the U.S. Coast Guard, and the U.S. Environmental Protection Agency. Washington, DC.

Ott, L. 1988. *An Introduction to Statistical Methods and Data Analysis*. 3rd ed. Boston: PWS-Kent Publishing Co.

Perez, A. and J. Lefante. 1996. "How Much Sample Size Is Required To Estimate the True Arithmetic Mean of a Lognormal Distribution?" In: Proceedings from the 1996 Joint Statistical Meetings in Chicago. American Statistical Association. Alexandria, VA.

Perez, A. and J. Lefante. 1997. "Sample Size Determination and the Effect of Censoring When Estimating the Arithmetic Mean of a Lognormal Distribution." *Communications in Statistics–Theory and Methods* 26(11):2779-2801.

Pitard, F.F. 1989. *Pierre Gy's Sampling Theory and Sampling Practice*. Vols. 1 and 2. Boca Raton, FL: CRC Press LLC.

EPAPAV0054568

References

Pitard, F.F. 1993. *Pierre Gy's Sampling Theory and Sampling Practice: Heterogeneity, Sampling Correctness, and Statistical Process Control*. 2nd ed. Boca Raton, FL: CRC Press LLC.

Porter, P.S, S.T. Rao, J.Y. Ku, R.L. Poirot, and M. Dakins. 1997. "Small Sample Properties of Nonparametric Bootstrap t Confidence Intervals–Technical Paper." *Journal of the Air & Waste Management Association* 47:1197-1203.

Puls, R.W. and M.J. Barcelona. 1996. *Low-Flow (Minimal Drawdown) Ground-Water Sampling Procedures*. EPA/540/S-95/504. U.S. Environmental Protection Agency, Office of Research and Development, Office of Solid Waste and Emergency Response. Washington, DC. http://www.epa.gov/r10earth/offices/oea/gwf/lwflw2a.pdf

Ramsey, C.A., M.E. Ketterer, and J.H. Lowry. 1989. "Application of Gy's Sampling Theory to the Sampling of Solid Waste Materials." In: Proceedings of the EPA Fifth Annual Waste Testing and Quality Assurance Symposium, Vol. II. U.S. Environmental Protection Agency. Washington, DC.

Rendu, J-M. 1980. *Optimization of Sampling Policies: A Geostatistical Approach*. Tokyo: MMIJ-AIME.

Rupp, G. 1990. *Debris Sampling at NPL Sites–Draft Interim Report*. Prepared for the U.S. Environmental Protection Agency, Exposure Assessment Division, Environmental Monitoring Systems Laboratory, Las Vegas, by the Environmental Research Center, University of Nevada, Las Vegas, NV, under Cooperative Agreement Number 814701.

Ryan, T.A. and B.L. Joiner. 1990. "Normal Probability Plots and Tests for Normality." *Minitab Statistical Software: Technical Reports* November 1-1 to 1-14.

Schilling, E.G. 1982. *Acceptance Sampling in Quality Control*. Marcel Dekker. NY.

Schulman, R.S. 1992. *Statistics in Plain English with Computer Applications*. New York: Van Nostrand Reinhold.

Schumacher, B.A., Shines, K.C., Burton, J.V. and Papp, M.L. 1991. "A Comparison of Soil Sample Homogenization Techniques." In: *Hazardous Waste Measurements*. M.S. Simmons, ed. Boca Raton, FL: Lewis Publishers.

Shapiro, S.S. and R.S. Francia. 1972. "An Approximate Analysis of Variance Test for Normality." *Journal of American Statistical Association* 67(337):215-16.

Shapiro, S.S. and M.B. Wilk. 1965. "An Analysis of Variance Test for Normality (Complete Samples)." *Biometrika* 52:591-611.

Shefsky, S. 1997. "Sample Handling Strategies for Accurate Lead-In-Soil Measurements in the Field and Laboratory." Presented at the International Symposium of Field Screening Methods Hazardous Wastes and Toxic Chemicals, Las Vegas, NV.

EPAPAV0054569

Singh, A.K., A. Singh, and M. Engelhardt. 1997. *The Lognormal Distribution in Environmental Applications*. EPA/600/R-97/006. U.S. Environmental Protection Agency, Office of Research and Development. Washington, DC. http://www.epa.gov/nerlesd1/pdf/lognor.pdf

Skalski, J.R. and J.M. Thomas. 1984. *Improved Field Sampling Designs and Compositing Schemes for Cost Effective Detection of Migration and Spills at Commercial Low-level Radioactive or Chemical Wastes Sites*. PNL-4935. Battelle Pacific Northwest Laboratory. Richland, WA.

United States Department of Energy (USDOE). 1996. "Statistical Methods for the Data Quality Objective Process." In: *DQO Statistics Bulletin* vol. 1. PNL-SA-26377-2. Prepared by Joanne Wendelberger, Los Alamos National Laboratory, for the U.S. Department of Energy. Washington, DC.

United States Environmental Protection Agency (USEPA). 1980. *Samplers and Sampling Procedures for Hazardous Waste Streams*. EPA-600/2-80-018. Municipal Environmental Research Laboratory. Cincinnati, OH.

USEPA. 1984. *Characterization of Hazardous Waste Sites–A Methods Manual. Volume I Site Investigations*. EPA/600/4-84-075. Environmental Monitoring Systems Laboratory, Office of Research and Development, Las Vegas, NV. (Available on CD-ROM. See USEPA 1998c)

USEPA. 1985. *Characterization of Hazardous Waste Sites–A Methods Manual. Volume II: Available Sampling Methods.* EPA/600/4-84-076. Environmental Monitoring Systems Laboratory, Office of Research and Development, Las Vegas, NV. (Available on CD-ROM. See USEPA 1998c)

USEPA. 1986a. *Test Methods for Evaluating Solid Waste, Physical/Chemical Methods, Updates I, II, IIA, IIB, III, and IIIA. SW-846*. NTIS publication no. PB97-156111 or GPO publication no. 955-001-00000-1. Office of Solid Waste. Washington, DC. http://www.epa.gov/epaoswer/hazwaste/test/sw846.htm

USEPA. 1986b. *Permit Guidance Manual on Unsaturated Zone Monitoring for Hazardous Waste Land Treatment Units*. EPA/530-SW-86-040. Washington, DC.

USEPA. 1987. RCRA Guidance Manual for Subpart G Closure and Post-Closure Care Standards and Subpart H Cost Estimating Requirements. 530-SW-87-010 (NTIS: PB87-158 978).

USEPA. 1988. *Methodology for Developing Best Demonstrated Available (BDAT) Treatment Standards*. EPA/530-SW-89-017L. Treatment Technology Section, Office of Solid Waste. Washington, DC.

USEPA. 1989a. *Methods for Evaluating the Attainment of Cleanup Standards. Volume 1: Soils and Solid Media*. EPA 230/02-89-042. NTIS PB89-234959. Statistical Policy Branch, Office of Policy, Planning, and Evaluation. Washington, DC. http://www.epa.gov/tio/stats/vol1soils.pdf

EPAPAV0054570

USEPA, 1989b, *Statistical Analysis of Ground-Water Monitoring Data at RCRA Facilities (Interim Final Guidance)*. Office of Solid Waste (NTIS, PB89-151047).

USEPA. 1989c. *RCRA Facility Investigation Guidance.* Vols. 1 - 4. EPA 530/SW-89-031. OSWER Directive 9502.00-6D. NTIS PB89-200299. Office of Solid Waste. Washington, DC. (Available on CD-ROM. See USEPA 1998g.)

USEPA. 1990. "Corrective Action for Solid Waste Management Units at Hazardous Waste Management Facilities: Proposed Rule." *Federal Register* (55 FR 30798, July 27, 1990).

USEPA. 1991a. *GEO-EAS 1.2.1 User's Guide.* EPA/600/8-91/008. Environmental Monitoring Systems Laboratory, Las Vegas, NV.

USEPA. 1991b. *Description and Sampling of Contaminated Soils–A Field Pocket Guide*. EPA/625/12-91/002. Center for Environmental Research Information. Cincinnati, OH.

USEPA. 1991c. *Final Best Demonstrated Available Technology (BDAT) Background Document for Quality Assurance/Quality Control Procedures and Methodology*. NTIS PB95-230926. Office of Solid Waste. Washington, DC.

USEPA. 1991d. *Site Characterization for Subsurface Remediation*. EPA/625/4-91/026. Office of Research and Development. Washington, DC.

USEPA. 1992a. *Supplemental Guidance to RAGS: Calculating the Concentration Term* 1(1). OERR Publication 9285.7-08I. NTIS PB92-963373. Office of Emergency and Remedial Response. Cincinnati, OH.

USEPA. 1992b. *Statistical Analysis of Ground-Water Monitoring Data at RCRA Facilities Addendum to Interim Final Guidance (July 1992)*. Office of Solid Waste. http://www.epa.gov/epaoswer/hazwaste/ca/resource/guidance/sitech_ar/gwstats/gwstats.htm

USEPA. 1992c. *RCRA Ground-Water Monitoring: Draft Technical Guidance*. EPA/530/R-93/001. Office of Solid Waste. Washington, DC.

USEPA. 1992d. *Specifications and Guidance for Contaminant-Free Sample Containers*. Publication 9240.05A. EPA/540/R-93/051.

USEPA. 1992e. *Multi-Media Investigation Manual*. EPA/330/9-89/003-R. National Enforcement Investigation Center. Denver, CO.

USEPA. 1992f. *Management of Investigation-Derived Wastes*. Directive 9345.3-03FS. NTIS PB92-963353. Office of Solid Waste and Emergency Response. Washington, DC.

USEPA. 1992g. *Guidance for Data Usability in Risk Assessment.* Final. 9285.7-09A and B. Office of Emergency and Remedial Response. Washington, DC.

USEPA. 1992h. 40 CFR Parts 268 and 271 Land Disposal Restrictions No Migration Variances; Proposed Rule. Federal Register: August 11, 1992.

EPAPAV0054571

USEPA. 1992i. *Methods for Evaluating the Attainment of Cleanup Standards. Volume 2: Ground Water*. EPA 230-R-92-14. Office of Policy, Planning, and Evaluation. Washington, DC.

USEPA. 1993a. *Data Quality Objectives Process for Superfund.* Interim Final Guidance. EPA/540.G-93/071. Office of Solid Waste and Emergency Response. Washington, DC.

USEPA. 1993b. *Guidance Specifying Management Measures for Sources of Nonpoint Pollution in Coastal Waters*. EPA-840-B-93-001c. Office of Water. Washington, DC.

USEPA. 1993c. *Subsurface Characterization and Monitoring Techniques–A Desk Reference Guide*. Vols. 1 and 2. EPA/625/R-93/003a and EPA/625/R-93/003b. Office of Research and Development. Washington, DC.

USEPA. 1993d. *Petitions to Delist Hazardous Waste–A Guidance Manual*. 2nd ed. EPA 530-R-93-007. NTIS PB 93-169365. Office Of Solid Waste. Washington, DC.

USEPA. 1994a. *Waste Analysis at Facilities That Generate, Treat, Store, and Dispose of Hazardous Wastes, a Guidance Manual*. OSWER 9938.4-03. Office of Solid Waste and Emergency Response. Washington, DC. http://www.epa.gov/epaoswer/hazwaste/ldr/wap330.pdf

USEPA. 1994b. "Drum Sampling." Environmental Response Team SOP #2009, Revision #0.0. Edison, NJ. http://www.ert.org/

USEPA. 1994c. "Tank Sampling." Environmental Response Team SOP #2010, Revision #0.0. Edison, NJ. http://www.ert.org/

USEPA. 1994d. "Waste Pile Sampling." Environmental Response Team SOP #2017, Revision #0.0. Edison, NJ. http://www.ert.org/

USEPA. 1994e. "Sediment Sampling." Environmental Response Team SOP #2016, Revision #0.0. Edison, NJ. http://www.ert.org/

USEPA. 1994f. "Sampling Equipment Decontamination." Environmental Response Team SOP #2006, Revision #0.0. Edison, NJ. http://www.ert.org/

USEPA. 1995a. *Determination of Background Concentrations of Inorganics in Soils and Sediment at Hazardous Waste Sites*. EPA/540/S-96/500. Office of Research and Development and Office of Solid Waste and Emergency Response. Washington, DC. http://www.epa.gov/nerlesd1/pdf/engin.pdf

USEPA. 1995b. *EPA Observational Economy Series, Volume 2: Ranked Set Sampling*. EPA/230-R-95-006. Office of Policy Planning and Evaluation. Washington, DC.

USEPA. 1995c. *EPA Observational Economy Series, Volume 1: Composite Sampling*. EPA-230-R-95-005. Office of Policy Planning and Evaluation. Washington, DC.

USEPA. 1995d. *QA/QC Guidance for Sampling and Analysis of Sediments, Water, and Tissues for Dredged Material Evaluations*. EPA/823-B-95-001.

EPAPAV0054572

USEPA. 1995e. *Superfund Program Representative Sampling Guidance Volume 5: Water and Sediment, Part I–Surface Water and Sediment*. Interim Final Guidance. Environmental Response Team. Office of Emergency and Remedial Response and Office of Solid Waste and Emergency Response. Washington, DC.

USEPA. 1995f. *Guidance for the Sampling and Analysis of Municipal Waste Combustion Ash for the Toxicity Characteristic*. Office of Solid Waste. EPA 530-R-95-036.

USEPA. 1996a. *Soil Screening Guidance User's Guide* (9355.4-23). Office of Solid Waste and Emergency Response. Washington, DC. http://www.epa.gov/superfund/resources/soil/index.htm

USEPA. 1996b. *Environmental Investigations Standard Operating Procedures and Quality Assurance Manual*. Region 4, Science and Ecosystem Support Division. Athens, GA. http://www.epa.gov/region04/sesd/eisopqam/eisopqam.html

USEPA. 1996c. "Soil Gas Sampling." Environmental Response Team SOP #2042, Revision #0.0. Edison, NJ.

USEPA. 1996d. *Region 6 RCRA Delisting Program Guidance Manual for the Petitioner*. Region 6, RCRA Multimedia Planning and Permitting Division, Dallas, TX. (Updated March 23, 2000).

USEPA. 1997a. "Geostatistical Sampling and Evaluation Guidance for Soils and Solid Media." Draft. Prepared by Dr. Kirk Cameron, MacStat Consulting, Ltd. and SAIC for the Office of Solid Waste under EPA contract 68-W4-0030. Washington, DC.

USEPA. 1997b. *Data Quality Assessment Statistical Toolbox (DataQUEST)*, *EPA QA/G-9D*. User's Guide and Software. EPA/600/R-96/085. Office of Research and Development. Las Vegas. http://www.epa.gov/quality/dqa.html

USEPA. 1998a. *EPA Guidance for Quality Assurance Project Plans, EPA QA/G-5*. EPA/600/R-98/018. Office of Research and Development. Washington, DC. http://www.epa.gov/quality/qs-docs/g5-final.pdf

USEPA. 1998b. *Final Technical Support Document for HWC MACT Standards, Volume VI Development of Comparable Fuels Standards*. Office of Solid Waste and Emergency Response, Washington, D.C. (May 1998).

USEPA. 1998c. *Site Characterization Library, Volume 1*. Release 2. EPA/600/C-98/001. Office of Research and Development, National Exposure Research Laboratory (NERL). Las Vegas, NV.

USEPA. 2000a. *Guidance for the Data Quality Objectives Process for Hazardous Waste Site Operations EPA QA/G-4HW*, EPA/600/R-00/007. Quality Staff, Office of Environmental Information, United States Environmental Protection Agency, Washington, D.C. January 2000. http://www.epa.gov/quality/qs-docs/g4hw-final.pdf

EPAPAV0054573

USEPA. 2000b. *Guidance for the Data Quality Objectives Process EPA QA/G-4*, EPA/600/R-96/055. Quality Staff, Office of Environmental Information, United States Environmental Protection Agency, Washington, D.C. August 2000. http://www.epa.gov/quality/qs-docs/g4-final.pdf

USEPA. 2000c. *Guidance for Choosing a Sampling Design for Environmental Data Collection,* EPA QA/G-5S. PEER REVIEW DRAFT. Quality Staff, Office of Environmental Information, United States Environmental Protection Agency, Washington, D.C. August 2000.

USEPA. 2000d. *Guidance for Data Quality Assessment, EPA QA/G-9* (QA00 Update). Quality Staff, Office of Environmental Information, United States Environmental Protection Agency, Washington, D.C. July 2000. http://www.epa.gov/quality1/qs-docs/g9-final.pdf

USEPA. 2001a. *Data Quality Objectives Decision Error Feasibility Trials Software (DEFT) - User's Guide*. EPA/240/B-01/007. (User's guide and software) Office of Environmental Information. Washington, DC. http://www.epa.gov/quality/qa_docs.html

USEPA. 2001b. *EPA Requirements for Quality Assurance Project Plans, EPA QA/R-5.* EPA/240/B-01/003. Office of Environmental Information. Washington, DC. http://www.epa.gov/quality/qa_docs.html

USEPA. 2001c. *Guidance on Environmental Data Verification and Data Validation EPA QA/G-8*. Quality Staff, Office of Environmental Information, United States Environmental Protection Agency, Washington, D.C. PEER REVIEW DRAFT. June 2001.

USEPA. 2001d. *Land Disposal Restrictions: Summary of Requirements*. EPA530-R-01-007. Office of Solid Waste and Emergency Response and Enforcement and Compliance Assurance. Revised August 2001.

USEPA. 2001e. *Guidance on Data Quality Indicators EPA QA/G-5i*. PEER REVIEW DRAFT. Office of Environmental Information, Washington, D.C. September 2001.

USEPA. 2001f. *EPA Requirements for Quality Management Plans, EPA QA/R-2*. EPA/240/B-01/002. Office of Environmental Information. Washington, DC. March. http://www.epa.gov/quality/qa_docs.html

USEPA. 2001g. *Contract Laboratory Program (CLP) Guidance for Field Samplers - Draft Final*. OSWER 9240.0-35. EPA540-R-00-003. Office of Solid Waste and Emergency Response. June. http://www.epa.gov/oerrpage/superfund/programs/clp/guidance.htm

USEPA. 2002a. *Guidance on Demonstrating Compliance With the Land Disposal Restrictions (LDR) Alternative Soil Treatment Standards, Final Guidance*. EPA530-R-02-003. Office of Solid Waste. July. http://www.epa.gov/epaoswer/hazwaste/ldr/soil_f4.pdf

USEPA and USDOE. 1992. *Characterizing Heterogeneous Wastes: Methods and Recommendations.* EPA/600/R-92/033. NTIS PB 92-216894. EPA Office of Research and Development, Las Vegas, NV and USDOE Office of Technology Development, Washington, DC.

EPAPAV0054574

References

van Ee, J.J., L.J. Blume, and T.H. Starks. 1990. *A Rationale for the Assessment of Errors in the Sampling of Soils.* EPA 600/4-90/013. Environmental Monitoring Systems Laboratory. Las Vegas, NV.

Visman, J. 1969. "A General Sampling Theory. Materials Research and Standards." *MTRSA* 9(11):8-13.

Wald, A. 1973. *Sequential Analysis*. New York: Dover Publications.

Williams, L.R., R.W. Leggett, M.L. Espegren, and C.A. Little. 1989. "Optimization of Sampling for the Determination of Mean Radium 226 Concentration in Surface Soil." *Environmental Monitoring and Assessment* 12:83-96. Dordrecht, the Netherlands: Kluwer Academic Publishers.

EPAPAV0054575

INDEX

Note: **Bold** page numbers indicate where the primary discussion of the subject is given.

Acceptance sampling, 27
Accuracy, **22**, 57, 134, 157-158, 160
Action level, 22, 31, **35**, 39-41, 45-47, 49, 51, 54, 61-63, 72, 78-79, 81-82, 84, 157, 163, 253, 278-282, 284, 296-297, 302
Additivity of errors in sampling and analysis
  of biases, 89
  of variances, 89
Alpha (α), **42**, 83
Alternative hypothesis, **43**, 157
Analytical methods, 1, 12, **36**, 40, 51, 70, 86-87, 108, 122, 131, 139, 144, 161, 164, 169
Analytical design, 50, **51**, 183, 298
Arithmetic mean, **77**, 165, 170, 187, 243
ASTM, 2, 16, 17, 35, 60, 63-65, 69, 74, 84, 101, **103**, 106, 107, 122, 124-126, 130, 134-137, 157-159, 163-164, 166, 168-169, 175, 191-192, 195-196, 201-240
  how to contact and obtain standards, 103
  summaries of standards, 305-322
Attribute, **27**, 39, 311, 321
Auger, bucket, 100, 111-113, 115, **225-226**, 287-288
Automatic sampler, 109-110, 159, **202**, 319, 321
Auxiliary variable, 54, **60**, 321

Background, 15, 24, 28, 33, 37, **41**, 42, 44, 181, 183
Bacon bomb sampler, 109, 110, 115, **209**
Bailer, 109, 110, 115, 230, **234-235**, 319
Beta (β), **42**, 162
Bias, **22-24**, 41, 49-50, 88-89, 95, 108, 118, 119, 123, 128, 141, 142, 144, 150, 157, 160, 164-165, 167-168, 200, 240, 249, 252, 274, 318
  analytical, 23, 89, 163
  sampling, 23, 89, 93-94, 104, 119, 124, 128, 244, 300
  statistical, 23, 89
Binomial distribution, 18
Bladder pump, 109, 110, 115, **202-203**
Bootstrap, 152, 250, **252**
Bottles, *see* containers
Boundaries
  defining, 15, 26, 30, **36-37**, 45, 49, 52, 59, 63, 66, 76, 79, 82, 158, 160, 279, 295
  spatial, 14, 23, 32, 36-37, 39, 49 ,158
  temporal, 14, 23, 32, 36-38, 49, 158
Box and whisker plot, 147, **148**
Bucket, **110-112**, 301

Calibration, 23, 86, 124, 140-143, **158**
Central limit theorem (CLT), **67**, 244
Centrifugal pump, 109, 110, 116, **205**
CERCLA, **2** , 317

Chain-of-custody, 4, 86, 122, 124, **125-127**, 132, 139-141, 143, 146, 158, 180, 310, 311
Cleanup (of a waste site), 8, 13, 28, 32, 33, 37-40, **43-44**, 51, 57, 62, 64, 68, 79, 82, 196, 261, 277
Closure, 7, 8, 10, 61, **181**, **185**
Coefficient of variation (CV), 147, **158**, 250, 284
Cohen's Adjustment, 152-153, 241, **257-261**
COLIWASA, 100, 108-111, 116, **228-229**, 314
Component stratification, 58, **194–196**
Comparing,
  populations, 24, **28**, 150
  to a fixed standard, **24**, 25, 27, 65, 71, 150, 152, 153, 155, 241, 242, 247-249, 251, 253-255, 258
Composite sample, 64-73, 80, 108, 115, 140, 158-9, 172, 187, 249, 284, 288-289, 318
Composite sampling, 52, **64-73**
  advantages, 65
  approach, 66-67
  limitations, 65-66
  number of samples, 73
  simple random, 67
  systematic, 68–69
Computer codes, *see* software
Conceptual site model (CSM), 32
Cone and quartering, 134
Confidence interval, **25-27**, 61-62, 70, 150, 155, 247-250, 252-254, 259
Confidence level, **47-48**, 61, 74, 84, 159
Confidence limits, **25**, 69, 155, 159
  for a lognormal mean, 75, 249
  for a normal mean using simple random or systematic sampling, 247-249
  for a normal mean using stratified random sampling, 248
  for a percentile, 253-255
  nonparametric confidence limits, 252
  using composite sampling, 249
Consensus standard, 17, **103**, 159
Containers, sample, 23, 62, 84, 96, 104, **122-123**, 128, 131-132, 138, 141
Control samples, 74, 96, **124-125**, 139, 142, 280
  duplicate, 51, 74, 142, 143, 161, 162
  equipment blank, 51, 74, 96, 125, 142, 162, 286
  field blank, 51, 74, 96, 125, 162
  rinsate, 96, 168, 286
  spikes, 74, 142, 143, 162, 163
  trip blank, 51, 74, 96, 125, 142, 162
Conveyor, 37, 52, 60, 95, 96, 98, 103, 104, **106-107**, 111, 112, 312
  belt, 52, 95, 98, 106-107, 312
  screw, 106-107
Coring type sampler, 111-113, 116, 214, **221**
Corrosivity, 7, 8, 13, 26, 27, 35, 40, 66, **173**, 293

Corrective action (RCRA), 1, 8, 10, 29, 40, 44, 79, **185**, 277

EPAPAV0054576

Data quality assessment, 1, 2, 4, 139, **145**,160, 241,275, 289, 302
Data quality objectives, 1, 2, 10, 24, 25, 145, 154, **160**
  process, 30-87, 160
  seven steps, 30
Data (*also see* distributions)
  collection design, 38, **50**, 51, 159
  gaps, 50, 143
DataQUEST software, 146-149, 244, **270**
Debris, 10, 58, 94, 97, 104, 106, **107**, 113, 121, 160, 191-196
  sampling methods, 191-196
Decision error, 31, 38, **41-48**, 73, 75, 76, 82, 142, 155, 160
Decision maker, 28, 31, **32**, 39-41, 43, 45, 49
Decision unit, 4, 15, 16, 26, **38-39**, 41, 47-49, 57, 67, 68, 76, 79, 81, 82, 84, 90, 91, 94, 99, 146, 161, 193, 194, 244
Decision rule, 30, **39-41**, 49, 76, 79, 82, 83, 150, 279, 295
Decision support, *see* Decision Unit
Decontamination, 23, 51, 100, 117, 118, 122, 124, 125, **128-130**, 141, 312, 314
DEFT software, 31, 45, 73, 84, **273**, 284
Degrees of freedom (*df*), **268**
  simple random or systematic sampling, 248, 249
  stratified random sampling, 78, 79, 243
Delta (Δ), 45
Detection limit, 40, **161**, 258
Dilution, 10, **58**, 71, 72
Dipper, 106, 109-112, 116, **236-237**, 313
Dispersion, **19**, 22, 169, 170, 193
Displacement pump, 109, 110, 116, **206-207**
Distributions, 14, 16, 17
  binomial, 18
  non normal, 18, **252**
  normal, **17-21**, 67, 75, 81, 147, 148, 150, 158, 170, 244
  lognormal, **17-19**, 75, 149, 150, 154, 195, 244, 249-250
Distributional assumptions, 87, 145, 148, **244**
Distribution heterogeneity, 91
Documentation, 86, 87, 95, 96, 122, **124-126**, 139-144, 336
DOT, **131**, 133, 174
Drum thief, 108, **230-231**
Drums, 15, 37, 39, 72, 73, 95, 99, 100, 103, **104-105**, 314, 315, 316
Duplicate, 51, 74, 142, 143, **161**, 162
Dynamic work plan, 161

Ease of use, 100
Effluent, 68, 94
Enforcement, **10-12**, 27, 43, 63
Errors, 3, 13, 16, **88-101**
  analytical, 3, 69, 88, 90
  components of, 88, 89
  contamination, 94, 96
  decision, 31, 38, **41-48**, 73, 75, 76, 82, 142, 155, 160
  delimitation, **94-96**, 99, 100, 102, 106, 136, 137, 211, 229
  extraction, **94**, 95, 99, 100, 102, 136, 137
  fundamental, 69, 91, **92-94**, 96-98, 135, 136, 197-200
  preparation, **94**, 95, 96
  segregation and grouping, 91
Example calculations
  Cohen's Adjustment, 261
  confidence level when using a simple exceedance rule, 256
  locating a hot spot using composite sampling, 73
  mean, 19
  mean and variance using composite sampling, 71
  number of samples for simple random sampling, 76
  number of samples for stratified random sampling, 79
  number of samples to estimate a percentile, 82
  number of samples using a "no exceedance" rule, 82
  Shapiro-Wilk test, 246-247
  standard deviation, 20
  upper confidence limit for a normal mean, 249
  upper confidence limit for a lognormal mean, 251
  upper confidence limit for a percentile, 255
  variance, 20
Examples of the DQO/DQA processes, 277-304
Exceedance rule method, 27-28, **255-256**
Exploratory study, 74

False positive (false rejection), **42**, 162
False negative (false acceptance), **42**, 162
Familiarization (analytical), 50
Field QC samples, *see* control samples
Filliben's Statistic, **148**, 244
Finite population correction, 77
Flash point, 66
Flowing or moving materials, sampling of, 15, 52, 91, 95, 96, **98**, 106, 309, 312, 314
Fragments, **92**, 94, 99, 134, 141, 163, 192, 197
Frequency plot, 148
Fundamental error, 69, 91, **92-94**, 96-98, 135, 136, 197-200
  controlling, 97
  definition, 163
  derivation, 197-200
  description, 92

Gases, 104, 114, 121, 173, 174
Geometric standard deviation (GSD), 75
Geostatistics and geostatistical methods, **15**, 29, 58, 59, 80, 90, 151, 163, 192, 273
Goodness-of-fit, 163, 244
Grab sample, **64**, 66, 73, 80, 163, 176
Graded approach, 32, 163
Gravitational segregation, 91

EPAPAV0054577

Gray region, 41, **45-47**, 49, 75, 76, 79, 81-84, 163, 281, 297
Grid, 56, **57**, 59, 68,80, 159, 274
Ground-water monitoring, 7, 10, 15, 28, 39, 44, 45, **114**, 121, 180, 181, 185, 309, 316, 321
Grouping error, 65, 91, **93**, 96, 134, 137, 138
Gy's sampling theory, 88–101

Haphazard sampling, 57
Hazardous waste:
determination, 8
regulations, 6-10, **171-189**
Hazardous waste characteristics, 164–165
corrosivity, 7, 8, 13, 26, 27, 35, 40, 66, **173**
ignitability, 7, 8, 13, 26, 27, 35, 40, 66, **173**
reactivity, 7, 8, 13, 26, 27, 35, 40, 66, **174**
toxicity, 7, 8, 13, 26, 27, 35, 40, 66, 73, 120, **173**
Health and safety, 38, 50, 84, 97, **130**
Heterogeneity, 4, 26, 52, 53, 66, 68, 69, 88, **90-91**, 93, 106, 137, 138, 163, 191-196
large-scale, 91, 191,192
periodic, 91
short-range, 68, 91, 93, 191
Heterogeneous waste, 4, 57, 58, 94, 107, **191-196**
Histogram, **17**, 18, 147, 148, 255
Holding time, 66, 74, 122, **123-124**, 131, 141, 143, 163
Homogenization, 4, 23, 66, 69, 91, 92, 102, **134**, 320
stationary processes, 134
dynamic processes, 134
Homogeneity, **164**, 192
Homogeneous, 92, 93, 97, 98, **134**, 136
Hot spots, 38, 39, 53, 57, 59, 65, 67, **71-73**, 164, 274
Hypothesis, 40, 41
alternative, 43, 157
null, **41-47**, 49, 76, 79, 82, 150, 152-155, 157
Hypothesis testing versus statistical intervals, 25

Increments, 61, 65, 91, **93**, 94, 96, 134, 135, 138, 158, 164, 194
Independence or independent samples, **69**, 71
International Air Transport Association (IATA), 131, **133**
Interpolation, 261
Ignitability, 7, 8, 13, 26, 27, 35, 40, 66, **173**
Investigation derived waste (IDW), 118, **129-130**

Jackknife, 152, 250, **252**
Judgment sampling, 48, 51, 55, **63-64**

Kemmerer depth sampler, 100, 108, 109, 117, **210-211**

Labels, sample, 96, 124, **125**, 131, 141, 310, 314
Land Disposal Restrictions (LDRs), 7, 8, **9-10**, 13, 26, 27, 35, 40, 44,66, 82, 113, 160, 171, 176, 177
Landfill, 28, 34, 52, 82, 104, 106
Land treatment, 8, 28, 33, 37, 41, 52, 121, **183**
Large-scale heterogeneity, 91, 191,192

Less-than values, *see* nondetects
Liquid grab sampler, 109-111, **237**
Liquids, 90, **98**, 100, 109, 110, 120, 136
Logbook, **124**, 140, 143, 146
Lognormal distribution, **17-19**, 75, 149, 150, 154, 195, 244, 249-250

Maps, **29**, 33, 37, 58, 59, 124, 141
Margin of error, 13
Mass of a sample, 4, 23, 36, 92, **96-97**, 136, 137, 197-200
Mean, 14, 17, **18-19**, 40, 165
Mean square error, **89**, 165
Measurement: 15-16
bias, 23
random variability, 23-24
Median, 17, **19**, 39, 40, 88, 155, 165, 249, 252
Miniature core sampler, 111-113, 117, **222-223**
Modified syringe sampler, 111-113, 117, **224**
Multi-phase mixtures, 98

Nondetects, 146, 147, 150, 154, **257-258**
Nonparametric methods, **18**, 83, 150, 153, 165, 252, 255, 256
Nonprobability sampling, 51, 55, **63**, 193
Normal distribution, **17-18**, 20, 21, 67, 75, 147, 148, 150, 244
Normal probability plot, **18**, 147, 148, 290-291
Nuggets, 92
Number of samples
composite sampling, 80
mean, normal distribution, using simple random sampling or systematic sampling, 73, 80
mean, normal distribution, using stratified random sampling, 77
mean, lognormal distribution, 75
percentile or proportion, 81
using an exceedance rule, 83

Optimal design, **50**, 78, 96
Outliers, 145, 147, **148-149**, 165, 250, 322
OSHA, 130

Packaging and shipping, 131
sample packaging, 131
sample shipping, 133
Parameter (statistical), 21, 23, 24, 25, 27, **39-40**, 166
Particle size distribution, 16, **94-95**
Particle size reduction, 69, 91, 93, 96, 97, 98, **136**, 137, 138, 192, 198, 200
Particulate, 90, 95, **97**, 134, 137, 317
Pass or fail data, **18**, 28, 35, 40, 81, 153
Percentile, 20, **21**, 26-27, 39-40, 45, 81, 151, 153, 166, 253
Performance-based measurement system (PBMS), 86
Peristaltic pump, 109–111, 118, 202, **204-205**
pH, **66**, 173, 174
Photoionization detector, 60

EPAPAV0054578

Piles:
elongated, **52**, 138
staging, **37**, 120
waste, 16, 37, 104, **106**, 168, 178, 187, 317
Pilot study, 43, 50, **74**, 80, 93, 315
Pipes, 37, 52, 60, 94, 95, 98, 104, 105, **106**, 109-112, 120, 196, 312
Plunger type sampler, 109-111, 118, **232–234**
Point estimate, **21**, 27, 252
Point of (waste) generation, 6, **15**, 33, 37, 39, 52, 73, 76, 82, 104, 106, 171, 193, 255, 295, 299, 300
Point source discharge, **106**, 182, 236, 238
Ponar dredge, 111, 118, **207-209**, 308, 309
Populations, 13, **14-15**, 16, 17, 24, 28, 194, 250
Pore water, **15**, 42, 182
Precision, 11, 14, **22-24**, 25, 26, 52, 58, 64, 65, 69, 70, 74, 80, 125, 134, 166, 194
Preliminary study, *see* pilot study
Preparation error, **94**, 95, 96
Preservation, 92, 94, 96, **123-124**, 131, 180, 308, 309
Probability plot, **18**, 21, 147-149, 245, 255, 257
Process knowledge or knowledge of the waste, 1, **9**, 10, 13, 27, 28, 34, 40, 43, 64, 175, 293
Proving the negative, **11-12**, 13, 295
Proving the positive, **11-12**, 13, 63

Quality assurance project plan (QAPP), 1, 3, 4, 30, 33, 34, 48, 50, 51, **84-87**, 139-142, 144, 146, 166
Quality control, 1, 11, 24, 30, 51, 87, 96, 122, **124-125**, 167, 313
Quick Safety Rule (Pitard's), 97, **198**

Random number, 57
Random variability, 3, 24, 26, **88-89**, 322
Randomization, 51
Range, 17, 41, **43**, 45, 75, 167
Ranked set sampling: 54
description, 60
procedure, 61
RCRA:
summary of regulatory citations, 171-189
Reactivity, 7, 8, 13, 26, 27, 35, 40, 66, **174**
Regulatory threshold, 11, 26, 27, **35**, 63, 72, 82, 124
Relative standard deviation, **97**, 156, 167
Relative variance, **97**, 197, 279
Remediation, 31, 33, 37, 44, **167**, 179
Repeatability, *see* precision
Representative sample, 7, 9, 13, **16**, 17, 168, 173-175, 178, 179, 180, 191
Riffle splitter, 134-135
Rinsate, 96, **168**, 286
Risk assessment, 29, **139**
Roll-off bin or container, 15, 37, 39, 52, 82, 95, 96, 99, 104, **106**, 113, 255
Rotating coring device, 113, 118, 225, **227-228**
Rosner's Test, 149

Sample:
biased, 55, **64**
correct, 96
discrete, 26, **64**, 66, 100
duplicate, 51, 74, 142, **161**
grab, **64**, 66, 73, 80, 163, 176
individual, 47, **64**
random, 19, **57-60**, 67, 77, 79, 80, 243
representative, 7, 9, 13, **16**, 17, 168, 173-175, 178, 179, 180, 191
split, 72, 95, **123**, 125, 135, 168
statistical, 14, **16**, 19, 21, 27, 169
Sample collection design, *see* sampling design
Sampling design, 51
authoritative, 62
biased, 64
judgmental, 63
probabilistic, 51
ranked set, 60-61
simple random, 57
stratified, 57–58
systematic, 59-60
Sampling in space and time, 52
Sampling devices, 109-114
limitations, 102
selecting, 95
Scientific method, 160, 168
Scoop, 98, 100, 107, 111-113, 118, 135, 137, **239-240**, 315, 319
Sediment, 104, 105, **114**, 121, 133
Segregation error, 91
Sequential sampling, 54, **61-62**
Settleable solids profiler, 109-111, 118, **233-234**
Shapiro-Wilk test, 147, 148, **244-246**
Sheet mixing, 134
Shelby tube, 100
Shipping samples, 133
Short range heterogeneity, 68, **91**, 93, 191
Shovel, 99, 100, 111-113, 119, **239-241**
Significance level, 47
Simple random sampling, 57
Slurry, 52, 106, **111**, 120, 312
Software:
ASSESS, 275
DataQUEST, 275
DEFT, 31, 45, 73, 84, **273**
DQOPro, 274
ELIPGRID-PC, 274
GeoEAS, 29, **273**
MTCA*Stat*, 275
UnCensor, 257
Visual Sample Plan (VSP), 274
Soil:
background concentrations, 28, 33, 37, **41**
volatiles in soil, 101
Soil gas, 104, **114**, 121, 310, 312, 313, 314
Solid waste, 1, **8-9**, 13, 15, 16, 26, 173, 174, 178
Solid waste management unit (SWMU), 15, 33, 37, 44, 52, 67, 79, 113, **185**, 277
Spatial correlation, **29**, 68, 68, 80, 163
Spatula, **137**, 138, 239

EPAPAV0054579

Split barrel sampler, 104, 112, 113, 119, **216-217**, 306
Splitting of samples, 135
Standard deviation:
  definition, **19-20**, 169
  for composite sampling, 70
  for simple random or systematic sampling, 19-20, 242
  for stratified random sampling, 243
Standard error of the mean, 21, 242
  description, 21
  for composite sampling, 71
  for simple random or systematic sampling, 21, 242
  for stratified random sampling, 77, 243
Standard operating procedures (SOPs), **51**, 86, 87, 124, 135, 136, 140, 142, 169
Statistical intervals, 25
Statistical methods, 241-261
Statistical tables, 263-272
Statistical software, 273-275
Stratification, 194, 196
  by component, 58
Stratified random sampling, 53, **57-58**
Stratum, **57**, 58, 59, 77-79, 169, 194, 195, 243
Student's t distribution, 248-250, **263**
Subsampling, 135
  liquids, 136
  mixtures of liquids and solids, 136
  soils and solid media, 136
Superfund, **2**, 15, 38, 94
Support, 16
  decision, *see* decision unit
  sample, 94-95
Swing jar sampler, 109-111, 119, **238**
Syringe sampler, 109-113, 119, **211-212**
Systematic sampling, 53, **59-60**

Tank(s), 7, 37, 52, 104, **105**, 106, 109-111, 115, 117, 120, 121, 129, 182
Target population, **36**, 37, 53, 57, 58
t distribution, *see* Student's t distribution
Thief, 100, 108-113, 116, 117, **217-219**, 230-231
Thin-walled tube, 112, 113, 119, **219-221**
Time (sampling over), 52
Tolerance limit, 27
Transformations of data, **150**, 249
Trends, 29, 53, 57, 59, **60**, 91, 150
Trier, 100, 111-113, 119, **218-219**, 314
Trowel, 99, 100, 111-113, 119, **239-240**
Two-sample tests, **28**, 151
Type I error, **42**, 43, 44, 47, 75, 76, 79, 83, 162, 170
Type II error, **42**, 43, 44, 47, 75, 76, 78, 83, 155, 162, 170

Universal treatment standards (UTS), 33, 151, **177**, 256
Upper confidence limit (UCL), *see* confidence limit
Used oil, 7, 8, 120, **172, 189**

Vadose zone, 107, 114, 121, **170**, 217, 221, 226, 310, 313, 315
Valved drum sampler, 109, 110, 119, **231-232**
Variance, **19-20**, 23
  additivity of variances, 89
  for composite samples, 70
  simple random or systematic sampling, 242
  stratified random sampling, 243
Verification and validation, 2, 87, **139-144**
Volatiles, sampling, 101
Volume or mass of a sample, 94, **96-97**, 108

Walsh's Test, 149
Waste:
  debris, 10, 58, 94, 97, 104, 106, **107**, 113, 121, 160, 191-196
  investigation derived, 118, **129-130**
  hazardous, 6-10, **171-189**
  heterogeneous, 4, 57, 58, 94, 107, **191-196**
  multi-phase, 98
  nonhazardous, **13**, 34, 38, 58, 82, 129, 194, 255
  one-dimensional, **52**, 56, 95, 96, 98, 102, 138
  three-dimensional, **95**, 96, 99
  two-dimensional, 56, 59, **95**, 99, 102
Waste analysis plan (WAP), 1, 3, 4, **10**, 30, 50, 84, 85, 139
Weighting factor, 58, **77-79**, 243

X-ray fluorescence, 60

EPAPAV0054580