South Coast
Air Quality Management District
21865 Copley Drive, Diamond Bar, CA 91765-4178
(909) 396-2000 · www.aqmd.gov

October 14, 2014
via electronic submittal

Mr. Gerardo Rios
U. S. EPA, Region IX
Mail Stop A-5-2
75 Hawthorne Street
San Francisco, California 94105

Dear ~~Mr. Rios~~: gerardo

Proposed Significant Revision (A/N 562500) to Title V Permit for Exide Technologies (ID# 124838)

Enclosed for your 45-day review is the proposed revision to the Title V Permit for Exide Technologies located at 2700 S. Indiana Street, Vernon, CA 90058. This revision is a "significant permit revision" pursuant to SCAQMD Regulation XXX and a public notice is required. The revision is considered significant since some of the new equipment is subject to 40CFR 63 Subpart X – National Emission Standards For Hazardous Air Pollutants From Secondary Lead Smelting. We are enclosing the proposed changes to the Title V permit to be included in Section H, the engineering evaluation, a copy of the permit applications, and a copy of the public notice. With your electronic receipt of this proposed Title V revision package, SCAQMD notes that the EPA 45-day review begins today, October 14, 2014.

The proposed changes to Section H incorporates changes to the air pollution control equipment serving the cupola furnace including the installation of a new venturi/tray-type scrubber, a new regenerative thermal oxidizer (RTO) with a cartridge-type dust collector, and the re-purposing of an existing baghouse. A second new RTO is also being proposed to be installed that will vent the rotary dryer at the facility. Finally, the ventilation systems are being re-configured to better capture and control both criteria and toxic air pollutants from a variety of sources. The installation/modification of the equipment and ventilation systems in this proposed permit revision result from the Risk Reduction Plan (RRP) filed by Exide pursuant to SCAQMD Rule 1402, as well as the requirement to comply with new toxic emission standards adopted in recently amended Rule 1420.1. Details of this risk reduction project can be found in the enclosed engineering evaluation.

The SCAQMD intends to publish the public notice in both English and Spanish, and make this proposed revised Title V permit available for public viewing in accordance with Rule 3006 for thirty days beginning on or about October 17, 2014.

This request is being made via electronic submittal in order to facilitate your review. If you have any questions or wish to provide comments regarding this project, please contact the processing engineer, Mr. Marco A. Polo, at (909) 396-2633, or by email at mpolo@aqmd.gov.

Very truly yours,

Mohsen Nazemi, PE
Deputy Executive Officer
Engineering and Compliance

MN:AYL:CDT:TGL
Enclosures:
Draft TV Permit
Engineering Evaluation
Permit Applications
Public Notice
Revised Final Risk Reduction Plan

cc: John Hogarth, Exide Technologies (w/Public Notice only)
A/N 562500

South Coast
Air Quality Management District
21865 Copley Drive, Diamond Bar, CA 91765-4178
(909) 396-2000 • www.aqmd.gov

NOTICE OF PROPOSED REVISION TO TITLE V PERMIT FOR EXIDE

The South Coast Air Quality Management District (SCAQMD) is the air pollution control agency for the four county-regions including all of Orange County and non-desert portions of Los Angeles, Riverside and San Bernardino Counties. Rule 3006 requires that the SCAQMD publish this notice prior to a significant revision of a Title V permit.

Facility Information

Exide Technologies, Inc.
2700 S. Indiana Street
Vernon, CA 90058
Facility ID # 124838
Contact Person:
Mr. Ed Mopas
Environmental Manager

This facility is a secondary lead smelter that recovers/recycles lead from lead acid batteries and other lead scrap materials. The facility operates a battery crushing and separation system, a rotary dryer, a cupola and reverberatory furnace, and several pot furnaces (refining kettles). Associated air pollution control equiment includes thermal oxidizers, scrubbers, and baghouses equipped with high efficiency particulate air (HEPA) filters. The facility has not been in operation since March 14, 2014.

Proposed Title V Permit Revisions

The proposed Title V Permit revision is for the installation of new air pollution control equipment in order for Exide to implement the risk reduction measures identified in their Risk Reduction Plan that was prepared in accordance to SCAQMD Rule 1402 and to assure compliance with SCAQMD Rule 1420.1. The proposed revision includes addition of a new scrubber, two regenerative thermal oxidizers (RTOs), a cartridge-type dust collector, re-purposing of an existing baghouse, and having the existing scrubber system control emissions from one furnace instead of two furnaces and have the new scrubber control emissions from the other furnace. In addition, the revision includes changes to the facility ventilation systems to better ensure that all emissions are properly controlled. The SCAQMD has evaluated the permit applications associated with these proposed changes and it is expected that the equipment will meet all applicable air quality Rules and Regulations. As required by Title V of the federal Clean Air Act and SCAQMD Regulation XXX, the SCAQMD is proposing to revise the existing Title V permit of this facility to include the new equipment and changes described above.

The proposed permit, engineering evaluation and Revised Final Risk Reduction Plan can be viewed at http://www3.aqmd.gov/webappl/publicnotices2/Search.aspx by entering the facility's ID number (124838). The proposed permit, engineering evaluation and Revised Final Risk Reduction Plan is also available at the SCAQMD, 21865 Copley Drive, Diamond Bar, CA 91765 and at the Los Angeles Public Library–Vernon Branch (Leon H. Washington Jr. Memorial), 4504 S. Central Avenue, Los Angeles, CA 90011.

Information regarding the facility owner's compliance history submitted to the SCAQMD pursuant to California Health & Safety Code Section 42336, or otherwise known to the SCAQMD based on credible information, is also available on the SCAQMD website under for public review under FIND database at http://www3.aqmd.gov/webappl/fim/prog/facility_details.aspx?fac_id=124838 **Anyone wishing to comment on the issuance of the proposed revised Title V permit and implementation of the Risk Reduction Plan should submit their comments in writing by November 17, 2014.**

The public may also request the SCAQMD to conduct a public hearing on the proposed permit by submitting a Hearing Request Form (Form 500-G). The public hearing request must contain all the information requested on the form in order for the SCAQMD to determine whether or not the request is valid and if a public hearing will be held. The public hearing request forms may be obtained from the SCAQMD by calling the Title V hotline at (909) 396-3013, or downloading from the internet at: http://www.aqmd.gov/docs/default-source/grants/500-g-form.pdf?sfvrsn=2. **Any request for a public hearing must be submitted to the SCAQMD no later than November 3, 2014. A copy of the hearing request must also be sent by first class mail to the facility contact person listed above at the same time.**

Written comments or requests for a Public Hearing must be submitted to:

South Coast Air Quality Management District
Engineering and Compliance
21865 Copley Drive
Diamond Bar, CA 91765-4178
Attention: Andrew Lee
Senior Engineering Manager

In addition, as the lead agency for approval of this project, the SCAQMD has prepared a document to identify environmental impacts associated with the implementation of the Risk Reduction Plan and proposed construction of air pollution control systems to assure compliance with other rules and regulations at Exide, in accordance with the California Environmental Quality Act (CEQA). Information regarding notice of intent to adopt the CEQA document and to review and comment on the document can be viewed at http://aqmd.gov/home/library/documents-support-material/lead-agency-permit-projects/permit-project-documents---year-2014

If you are concerned primarily about zoning decisions and the process by which this facility has been sited at this location, you should contact your local city or county planning department. For your general information, anyone experiencing air quality problems such as dust, smoke and odors can telephone in a complaint to the SCAQMD by calling 1-800-CUT-SMOG (1-800-288-7664). For additional information, please contact Mr. Andrew Lee at (909) 396-2643 or by e-mail at Alee@aqmd.gov.

South Coast
Air Quality Management District
21865 Copley Drive, Diamond Bar, CA 91765-4178
(909) 396-2000 • www.aqmd.gov

AVISO DE LA PROPUESTA PARA REVISAR EL PERMISO (TITLE V) DE EXIDE

South Coast Air Quality Management District o "SCAQMD" es la agencia local que se encarga de la gestión de la calidad del aire en todo el condado de Orange y las áreas no-desérticas de los condados de Los Angeles, Riverside y San Bernardino. El Reglamento 3006 de SCAQMD requiere la publicación de este aviso antes te proceder a revisar el permiso conocido como Capitulo V (Title V.)

Información de la Empresa

Exide Technologies, Inc.
2700 S. Indiana Street
Vernon, CA 90058
Facility ID # 124838
Representante de la empresa:
Mr. Ed Mopas
Environmental Manager

Esta empresa se dedica a fundir plomo, es decir recupera/recicla el plomo de las baterías ácidas y de desechos metalicos que contienen plomo. La empresa funciona el sistema del machacamiento y de la separación de baterías, un secador rotatorio, una cúpula y un horno reverberatorio, y varios hornos de pote (calderas de refinación). El equipo asociado con control de la contaminación atmosférica incluye los oxidantes, los depuradores, y la casa de filtros equipada con filtros de alta eficacia (HEPA). La empresa no ha operado desde el 14 de marzo de 2014.

Propuesta Para Revisar el Permiso "Title V"

La revisión propuesta es necesaria para que la empresa instale un nuevo equipo de control de la contaminación atmosférica para que Exide implemente las medidas de reducción de riesgo identificadas en su Plan De Reducción de Riesgo preparado de acuerdo al Reglamento 1402 de SCAQMD; y, de esta forma asegurar que las operaciones estén en conformidad con el Reglamento 1420.1 de SCAQMD. La revisión propuesta incluye la adición de un nuevo depurador, de dos oxidantes termales regeneradores (RTOs), y de un colector de polvo de tipo cartucho. También, la casa de filtros y depuradores existentes serán dedicados a un horno en vez de dos. A su vez el equipo nuevo será dedicado al otro horno. Además, la revisión incluye cambios a los sistemas de ventilación de las operaciones para asegurarse que todas las emisiones están controladas correctamente. SCAQMD ha evaluado esta propuesta y anticipa que las revisiones llenen los requisitos de los reglamentos de la calidad del aire aplicables. Según los requisitos de Capitulo V de la ley federal que gestiona la calidad de aire a nivel nacional, y de la Regulación XXX de SCAQMD. SCAQMD está proponiendo revisar el permiso existente de esta empresa para incluir nuevos equipo y los cambios descritos previamente.

La evaluación técnica , el permiso propuesto, y el Revisado Final Plan de Reducción de Riesgos se puede ver en http://www3.aqmd.gov/webappl/publicnotices2/Search.aspx al someter el numero de identificación de la empresa el cual es 124838. También usted puede ver estos documentos en nuestras oficinas centrales en: 21865 Copley Drive, Diamond Bar, CA 91765 y en Los Angeles Public Library–Vernon Branch (Leon H. Washington Jr. Memorial), 4504 S. Central Avenue, Los Angeles, CA 90011.

La información con respecto a la historial de cumplimiento del dueño de la empresa sometida al SCAQMD conforme a la sección 42336 del Código de la Salud y de la Seguridad de California, o de otra manera conocida al SCAQMD basado en la información creíble, está también disponible en SCAQMD: en http://www3.aqmd.gov/webappl/fim/prog/facility_details.aspx?fac_id=124838 **Cualquier persona que desea comentar respecto a la emisión del permiso enmendado Capitulo V propuesto y a la puesta en práctica del plan de la reducción del riesgo debe someter sus comentarios en escribir por 17 Noviembre 2014.**

El público puede también solicitar a SCAQMD conducir una audiencia pública acerca del permiso propuesto haciendo una solicitud en la forma 500-G. La petición de la audiencia pública debe contener toda la información solicitada para que el SCAQMD determine si la petición sea válida y si una audiencia pública es llevada a cabo. Formas de la petición de la audiencia pública se pueden obtener del SCAQMD llamando el teléfono directo del Capitulo V al (909) 396-3013, o descargándolo del Internet en: http://www.aqmd.gov/docs/default-source/grants/500-g-form.pdf?sfvrsn=2. La solicitud debe ser sometida no después de **3 Noviembre 2014**. Una copia de la petición de la audiencia se debe también enviar por correo de primera clase al contacto de la empresa

Los comentarios o la solicitud para audiencia pública se deben someter a:

South Coast Air Quality Management District
Engineering and Compliance
21865 Copley Drive
Diamond Bar, CA 91765-4178
Attention: Andrew Lee
Senior Engineering Manager

Además, como la agencia líder para la aprobación de este proyecto, el SCAQMD ha elaborado un documento para identificar las consecuencias para el medio ambiente asociadas a la puesta en práctica del plan de la reducción del riesgo y a la construcción propuesta de los sistemas de control de la contaminación atmosférica para asegurar conformidad con otras reglas y regulaciones en Exide, de acuerdo con el acto ambiental de la calidad de California (CEQA). La información con respecto al aviso del intento de adoptar el documento de CEQA y de repasarlos y el comentario sobre el documento puede ser vista en http://aqmd.gov/home/library/documents-support-material/lead-agency-permit-projects/permit-project-documents---year-2014

Si a usted lo que más le interesa es la ubicación de la empresa y el proceso bajo cual esta empresa está situado en ese sector, por favor contacte al departamento de planificación de su ciudad o al departamento de planificación del condado. Cualquier persona que experimenta problemas de la calidad del aire tales como polvo, el humo y los olores puede registrar una queja con SCAQMD llamando al 1-800-CUT-SMOG (1-800-288-7664). Para más información, favor de comunicarse con Mr. Andrew Lee al (909) 396-2643 o por correo electrónico a Alee@aqmd.gov.

FACILITY PERMIT TO OPERATE
EXIDE TECHNOLOGIES

SECTION H: PERMIT TO CONSTRUCT AND TEMPORARY PERMIT TO OPERATE

The operator shall comply with the terms and conditions set forth below:

CHANGES ARE IN INDICATED IN BOLD AND HIGHLIGHTED

APPLICATION NO. 558214

Equipment	ID No.	Connected To	RECLAIM Source Type/ Monitoring Unit	Emissions* And Requirements	Conditions
Process 1: SECONDARY METALS, LEAD SMELTING PROCESS					
System 10: REVERB FURNACE FEED ROOM APCS					
BAGHOUSE, NO. 1, WITH 494 BAGS, EACH 5 INCHES DIAMETER X 12 FEET LONG, PTFE MEMBRANE, MAC, MODEL 144MCF494, WITH A 150 HP BLOWER AND A BROKEN BAG DETECTOR, PULSE JET CLEANED A/N: **558214**	C156	**B206** D109 D110 D111 D112 D113 D151 S158 C175 C182 C190 **C200**		**LEAD**: (10) [**40CFR 63 Subpart X, #01, 1-29-1999**]; **PM**: (9) [**RULE 404, 2-7-1986**]	C6.4, D12.6, D12.7, D12.10, D12.16, D381.1, E102.1, H116.1, H116.4
DUST COLLECTOR, HEPA, WITH 25 PRE-FILTERS, EACH 2 FT. W. X 2 FT. L. X 2 INCHES THICK, WITH, 25 HEPA FILTERS, EACH 2 FT. W. X 2 FT. L. X 1 FT. THICK **A/N: 558214**	**C200**	**C156 S158**		**LEAD: (10) [40CFR 63 Subpart X, #01, 1-29-1999]; PM: (9) [RULE 404, 2-7-1986]**	D12.19, D182.10, D323.1, E102.1, E448.1, H116.1, H116.2, K171.7
BAGHOUSE, NO. 2, WITH 494 BAGS, EACH 5 INCHES DIAMETER X 12 FEET LONG, PTFE MEMBRANE, MAC, MODEL 144MCF494, WITH A 150 HP BLOWER AND A BROKEN BAG DETECTOR, PULSE JET CLEANED A/N: **558214**	C157	**B206** D109 D110 D111 D112 D113 D151 S158 C175 C182 C190 **C201**		**LEAD**: (10) [**40CFR 63 Subpart X, #01, 1-29-1999**]; **PM**: (9) [**RULE 404, 2-7-1986**]	C6.4, D12.6, D12.7, D12.10, D12.16, D381.1, E102.1, H116.1, H116.4
DUST COLLECTOR, HEPA, WITH 25 PRE-FILTERS, EACH 2 FT. W. X 2 FT. L. X 2 INCHES THICK, WITH, 25 HEPA FILTERS, EACH 2 FT. W. X 2 FT. L. X 1 FT. THICK **A/N: 558214**	**C201**	**C157 S158**		**LEAD: (10) [40CFR 63 Subpart X, #01, 1-29-1999]; PM: (9) [RULE 404, 2-7-1986]**	D12.19, D182.10, D323.1, E102.1, E448.1, H116.1, H116.2, K171.7
STACK, HEIGHT: 120 FT ; DIAMETER: 6 FT A/N: **558214**	S158	**C200, C201**			D182.5, D182.10 **D182.11** **E448.11** D381.1, K171.7

* (1) (1A) (1B) Denotes RECLAIM emission factor
(2) (2A) (2B) Denotes RECLAIM emission rate
(3) Denotes RECLAIM concentration limit
(4) Denotes BACT emission limit
(5) (5A) (5B) Denotes command and control emission limit
(6) Denotes air toxic control rule limit
(7) Denotes NSR applicability limit
(8) (8A) (8B) Denotes 40 CFR limit (e.g. NSPS, NESHAPS, etc.)
(9) See App B for Emission Limits
(10) See section J for NESHAP/MACT requirements

** Refer to section F and G of this permit to determine the monitoring, recordkeeping and reporting requirements for this device.

FACILITY PERMIT TO OPERATE
EXIDE TECHNOLOGIES

SECTION H: PERMIT TO CONSTRUCT AND TEMPORARY PERMIT TO OPERATE

The operator shall comply with the terms and conditions set forth below:

APPLICATION NO. 559499

Equipment	ID No.	Connected To	RECLAIM Source Type/ Monitoring Unit	Emissions* And Requirements	Conditions
Process 1: SECONDARY METALS, LEAD SMELTING PROCESS					
System 2: FEED DRYING SYSTEM					
DRYER, ROTARY, NATURAL GAS, FEED DRYING, 8 MMBTU/HR A/N: 564346	D115	C143	NOX: PROCESS UNIT**; SOX: PROCESS UNIT**	**CO**: 2000 PPMV (5) [**RULE 407, 4-2-1982**]; **LEAD**: (10) [**40CFR 63 Subpart X, #01, 1-29-1999**]; **NOX**: 130 LBS/MMSCF NATURAL GAS (1) [**RULE 2012, 12-7-1995;** *RULE 2012, 4-9-1999*]; **PM**: (9) [**RULE 405, 2-7-1986**]; **PM**: 0.1 GRAINS/SCF (5) [**RULE 409, 8-7-1981**]; **SOX**: 0.005 LBS/TON MATERIAL (1) [**RULE 2011, 12-7-1995;** *RULE 2011, 4-9-1999*]	B295.1, C6.1, D12.8, D323.1, H116.2, K67.10
CONVEYOR, SCREW, DRYER DISCHARGE A/N: 564346	D116	C143		**LEAD**: (10) [**40CFR 63 Subpart X, #01, 1-29-1999**]; **PM**: (9) [**RULE 405, 2-7-1986**]	D323.1
CYCLONE, HEIGHT: 17 FT 7 IN; DIAMETER: 5 FT 10 IN A/N: 559499	C143	D114 D115 D116 C144		**LEAD**: (10) [**40CFR 63 Subpart X, #01, 1-29-1999**]; **PM**: (9) [**RULE 405, 2-7-1986**]	D323.1
BAGHOUSE, WITH EXPANDED TEFLON MEMBRANE BAGS WITH TEFLON SUBSTRATES, 5881 SQ.FT.; 312 BAGS A/N: 559499	C144	C143 C184		**LEAD**: (10) [**40CFR 63 Subpart X, #01, 1-29-1999**]; **PM**: (9) [**RULE 404, 2-7-1986**]	C6.2, D12.5, D12.6, D381.1, E102.1, E193.1, H116.1, H116.2, H116.4, K67.2
INJECTOR, SIDEWALL WATER SPRAY, WITH 2 FLAMEX F180 NOZZLES, WITH SPARK ARRESTOR CONTROLLER, FLAMEX FMZ4100GAB24, A BATTERY BACK-UP, 8 FUX 3001-E OPTICAL IR SPARK DETECTORS A/N: 559499	B176				E448.6
DUST COLLECTOR, HEPA, WITH 6 PRE-FILTERS EACH 2 FT W. X 2 FT L. X 2 INCHES THICK, WITH 6 HEPA FILTERS EACH 2 FT W. X 2 FT L. X 11.5 INCHES THICK A/N: 559499	C184	C144 C199		**LEAD**: (10) [**40CFR 63 Subpart X, #01, 1-29-1999**]; **PM**: (9) [**RULE 404, 2-7-1986**]	D12.18, D323.1, H116.3

* (1) (1A) (1B) Denotes RECLAIM emission factor
(2) (2A) (2B) Denotes RECLAIM emission rate
(3) Denotes RECLAIM concentration limit
(4) Denotes BACT emission limit
(5) (5A) (5B) Denotes command and control emission limit
(6) Denotes air toxic control rule limit
(7) Denotes NSR applicability limit
(8) (8A) (8B) Denotes 40 CFR limit (e.g. NSPS, NESHAPS, etc.)
(9) See App B for Emission Limits
(10) See section J for NESHAP/MACT requirements

** Refer to section F and G of this permit to determine the monitoring, recordkeeping and reporting requirements for this device.

FACILITY PERMIT TO OPERATE
EXIDE TECHNOLOGIES

SECTION H: PERMIT TO CONSTRUCT AND TEMPORARY PERMIT TO OPERATE

The operator shall comply with the terms and conditions set forth below:

Equipment	ID No.	Connected To	RECLAIM Source Type/ Monitoring Unit	Emissions* And Requirements	Conditions
Process 1: SECONDARY METALS, LEAD SMELTING PROCESS					
OXIDIZER, REGENERATIVE, OXIDIZERS INC, MODEL OX-2CH-PP02, 8FT W.X14FT L. X14FT-6 IN.H, NATURAL GAS, WITH A MAXON 3 IN. BURNER AND A 10-H.P. COMBUSTION AIR BLOWER, 2.5 MMBTU/HR, WITH A 100-H.P. EXHAUST BLOWER A/N: 559499	**C199**	**C184 S145**	**NOX: PROCESS UNIT**; SOX: PROCESS UNIT****	**CO: 2000 PPMV (5) [RULE 407, 4-2-1982]; LEAD: (10) [40CFR 63 Subpart X, #01, 1-29-1999]; NOX: 30 PPMV (3) [RULE 2012, 5-6-2005]; PM: (9) [RULE 405, 2-7-1986]; PM: 0.1 GRAINS/SCF (5) [RULE 409, 8-7-1981]; SOX: 0.83 LBS/MMSCF NATURAL GAS (1) [RULE 2011, 5-6-2005]**	**C8.9 D182.11 D182.12 D182.13** D323.1 K67.12 K171.6
STACK, HEIGHT: 120 FT ; DIAMETER: 3 FT A/N: **559499**	S145	**C199**			D182.5, **D182.11 D182.12 D182.13 E448.11** D381.1, K171.6

* (1) (1A) (1B) Denotes RECLAIM emission factor
(2) (2A) (2B) Denotes RECLAIM emission rate
(3) Denotes RECLAIM concentration limit
(4) Denotes BACT emission limit
(5) (5A) (5B) Denotes command and control emission limit
(6) Denotes air toxic control rule limit
(7) Denotes NSR applicability limit
(8) (8A) (8B) Denotes 40 CFR limit (e.g. NSPS, NESHAPS, etc.)
(9) See App B for Emission Limits
(10) See section J for NESHAP/MACT requirements

** Refer to section F and G of this permit to determine the monitoring, recordkeeping and reporting requirements for this device.

FACILITY PERMIT TO OPERATE
EXIDE TECHNOLOGIES

SECTION H: PERMIT TO CONSTRUCT AND TEMPORARY PERMIT TO OPERATE

The operator shall comply with the terms and conditions set forth below:

APPLICATION NO. 562498 and APPLICATION NO. 562503

Equipment	ID No.	Connected To	RECLAIM Source Type/ Monitoring Unit	Emissions* And Requirements	Conditions
	(APCS No. 2)			(APCS No. 1)	
Process 1: SECONDARY METALS, LEAD SMELTING PROCESS					
System 7: REVERBERATORY AND CUPOLA FURNACE APCS					
TOWER, QUENCH CHAMBER, WATER SPRAY TYPE, HEIGHT: 61 FT ; DIAMETER: 10 FT WITH **A/N: 562503**	D135	D119 D136		**LEAD**: (10) [**40CFR 63 Subpart X, #01, 1-29-1999**]; **PM**: (9) [**RULE 404, 2-7-1986**]	D323.1
FUGITIVE EMISSIONS, MISCELLANEOUS, QUENCH CHAMBER CLEANOUT DOOR	D149	C47		**LEAD**: (10) [**40CFR 63 Subpart X, #01, 1-29-1999**]; **PM**: (9) [**RULE 404, 2-7-1986**]	D323.1
HEAT EXCHANGER, REVERB FURNACE EXHAUST GAS, A-PIPE TYPE, 49 IN. OUTSIDE DIA., 130 FT. TOTAL LENGTH **A/N: 562503**	D136	D135 D137		**LEAD**: (10) [**40CFR 63 Subpart X, #01, 1-29-1999**]; **PM**: (9) [**RULE 404, 2-7-1986**]	D323.1
HEAT EXCHANGER, ,BALLOON TYPE FLUE COOLER, SECTION 1, REVERB FURNACE EXHAUST GAS, 66 IN. W., 48 FT. L., 9 FT. H. **A/N: 562503**	D137	D136 D138		**LEAD**: (10) [**40CFR 63 Subpart X, #01, 1-29-1999**]; **PM**: (9) [**RULE 404, 2-7-1986**]	D323.1
HEAT EXCHANGER, ,BALLOON-TYPE FLUE COOLER, SECTION 2, REVERB FURNACE EXHAUST GAS, 48 IN. W., 66 FT. L., 6 FT. H. **A/N: 562503**	D138	C40 D137		**LEAD**: (10) [**40CFR 63 Subpart X, #01, 1-29-1999**]; **PM**: (9) [**RULE 404, 2-7-1986**]	D323.1
AFTERBURNER, NATURAL GAS, WITH A 20 HP COMBUSTION AIR BLOWER, 10 MMBTU/HR **NATURAL GAS FIRED A/N: 562498**	C44	**D128 D134**	NOX: MAJOR SOURCE** **SOX: MAJOR SOURCE****	**CO**: 2000 PPMV (5) [**RULE 407, 4-2-1982**]; **LEAD**: (10) [**40CFR 63 Subpart X, #01, 1-29-1999**]; **PM**: (9) [**RULE 404, 2-7-1986**]; **PM**: 0.1 GRAINS/SCF (5) [**RULE 409, 8-7-1981**]	C8.1, D323.1, H116.2, K67.8
DUST COLLECTOR, RTO GAS INLET CONDITIONING, CARTRIDGE TYPE, MAC, MODEL MAC2FLO 4M2F64, WITH 64 CARTRIDGE FILTERS, EACH 2 FT.-6 IN L. X 2 FT.-4.4 IN. DIA., PULSE JET CLEANED. A/N 562498	**C204**	**D133 C205**		**LEAD**: (10) [**40CFR 63 Subpart X, #01, 1-29-1999**]; **PM**: (9) [**RULE 404, 2-7-1986**]	D12.1, D12.17, D323.1 D381.1, E102.1, E193.1, H116.2, H116.4, **K67.13**

* (1) (1A) (1B) Denotes RECLAIM emission factor
(2) (2A) (2B) Denotes RECLAIM emission rate
(3) Denotes RECLAIM concentration limit
(4) Denotes BACT emission limit
(5) (5A) (5B) Denotes command and control emission limit
(6) Denotes air toxic control rule limit
(7) Denotes NSR applicability limit
(8) (8A) (8B) Denotes 40 CFR limit (e.g. NSPS, NESHAPS, etc.)
(9) See App B for Emission Limits
(10) See section J for NESHAP/MACT requirements

** Refer to section F and G of this permit to determine the monitoring, recordkeeping and reporting requirements for this device.

FACILITY PERMIT TO OPERATE
EXIDE TECHNOLOGIES

SECTION H: PERMIT TO CONSTRUCT AND TEMPORARY PERMIT TO OPERATE

The operator shall comply with the terms and conditions set forth below:

Equipment	ID No.	Connected To	RECLAIM Source Type/ Monitoring Unit	Emissions* And Requirements	Conditions
Process 1: SECONDARY METALS, LEAD SMELTING PROCESS					
OXIDIZER, REGENERATIVE, OXIDIZERS INC, MODEL OX-2CH-PP02U,11FT W.X19FT-6IN L. X23FT-11 IN.H, NATURAL GAS, WITH A MAXON 4 IN. BURNER AND A 10-H.P. COMBUSTION AIR BLOWER, 4.6 MMBTU/HR, WITH A 200-H.P. BOOSTER BLOWER A/N: 562498	**C205**	**C204 C41C45 C174**	**NOX: MAJOR SOURCE** SOX: MAJOR SOURCE****	**CO: 2000 PPMV (5) [RULE 407, 4-2-1982]; LEAD: (10) [40CFR 63 Subpart X, #01, 1-29-1999]; PM: (9) [RULE 405, 2-7-1986]; PM: 0.1 GRAINS/SCF (5) [RULE 409, 8-7-1981]; SOX: 0.83 LBS/MMSCF NATURAL GAS (1) [RULE 2011, 5-6-2005]**	**C8.9** D323.1 **K67.12 D182.12 D182.13 E448.14**
TANK, CUPOLA JACKET COOLING, THERMOSIPHON **A/N: 562498**	D134	**C44** D183			
HEAT EXCHANGER, CUPOLA FURNACE EXHAUST GAS, A-PIPE TYPE, 49 IN. OUTSIDE DIA., 130 FT. TOTAL LENGTH **A/N: 562498**	D183	D134 D173		**LEAD**: (10) [**40CFR 63 Subpart X, #01, 1-29-1999**]; **PM**: (9) [**RULE 404, 2-7-1986**]	D323.1
HEAT EXCHANGER, U-TUBE COOLER, FIVE SECTION, WITH 2 HOPPERS, A TUBE BYPASS, A TUBE DAMPER VALVE, AND A HOPPER BY-PASS WITH A DAMPER **A/N: 562498**	D173	C174 D183		**LEAD**: (10) [**40CFR 63 Subpart X, #01, 1-29-1999**]; **PM**: (9) [**RULE 404, 2-7-1986**]	D323.1
CYCLONE, DIAMETER: 4 FT 9 IN **A/N: 562498**	C174	**D7 D9 C41** C45 D173		**LEAD**: (10) [**40CFR 63 Subpart X, #01, 1-29-1999**]; **PM**: (9) [**RULE 404, 2-7-1986**]	
BAGHOUSE, WITH EXPANDED TEFLON MEMBRANE BAGS WITH TEFLON SUBSTRATES, 21362 SQ.FT.; 510 BAGS, **WITH A 450-H.P. EXHAUST BLOWER A/N: 562503**	C40	C42 D138 **C202**		**LEAD**: (10) [**40CFR 63 Subpart X, #01, 1-29-1999**]; **PM**: (9) [**RULE 404, 2-7-1986**]	C6.3, D12.5, D12.6, D12.11, **D182.14 D182.15** D381.1, E102.1, E193.1, **E448.14** H116.1, H116.2, H116.4, K67.2

* (1) (1A) (1B) Denotes RECLAIM emission factor
(2) (2A) (2B) Denotes RECLAIM emission rate
(3) Denotes RECLAIM concentration limit
(4) Denotes BACT emission limit
(5) (5A) (5B) Denotes command and control emission limit
(6) Denotes air toxic control rule limit
(7) Denotes NSR applicability limit
(8) (8A) (8B) Denotes 40 CFR limit (e.g. NSPS, NESHAPS, etc.)
(9) See App B for Emission Limits
(10) See section J for NESHAP/MACT requirements

** Refer to section F and G of this permit to determine the monitoring, recordkeeping and reporting requirements for this device.

FACILITY PERMIT TO OPERATE
EXIDE TECHNOLOGIES

SECTION H: PERMIT TO CONSTRUCT AND TEMPORARY PERMIT TO OPERATE

The operator shall comply with the terms and conditions set forth below:

Equipment	ID No.	Connected To	RECLAIM Source Type/ Monitoring Unit	Emissions* And Requirements	Conditions
Process 1: SECONDARY METALS, LEAD SMELTING PROCESS					
BAGHOUSE, WITH EXPANDED TEFLON MEMBRANE BAGS WITH TEFLON SUBSTRATES, 21362 SQ.FT.; 510 BAGS, **WITH A 450-H.P. EXHAUST BLOWER A/N: 562498**	C41	**D7 D9** C42 **D132 C174 C202**		**LEAD**: (10) [**40CFR 63 Subpart X, #01, 1-29-1999**]; **PM**: (9) [**RULE 404, 2-7-1986**]	C6.3, D12.5, D12.6, D12.11, **D182.14 D182.15** D381.1, E102.1, E193.1, **E448.14** H116.1, H116.2, H116.4, K67.2
BAGHOUSE, WITH EXPANDED TEFLON MEMBRANE BAGS WITH TEFLON SUBSTRATES, 22620 SQ.FT., **WITH A 450-H.P. EXHAUST BLOWER A/N: 562498**	C45	**D7 D9** C42 **D173** C174 **C202**		**LEAD**: (10) [**40CFR 63 Subpart X, #01, 1-29-1999**]; **PM**: (9) [**RULE 404, 2-7-1986**]	C6.3, D12.5, D12.6, D12.11, **D182.14 D182.15** D381.1, E102.1, E193.1, **E448.14** H116.1, H116.2, H116.4, K67.2
SCRUBBER, VENTURI, AIRPOL, MODEL 3970P, HEIGHT: 13 FT 9 IN; DIAMETER: 4 FT **A/N: 562503**	C42	C40 C41 C43 C45		**LEAD**: (10) [**40CFR 63 Subpart X, #01, 1-29-1999**]; **PM**: (9) [**RULE 404, 2-7-1986**]; **ROG**: (10) [**40CFR 63 Subpart X, #01, 1-29-1999**]	C8.2, C8.3, C8.5, C8.6, C8.7, **D182.14 D182.15** D323.1, **E448.14** H116.2, K67.7
SCRUBBER, TRAY, **NEPTUNE AIRPOL, MODEL T-271, WITH 3 TRAYS,** HEIGHT: 30 FT 9 IN; DIAMETER: 8 FT 6 IN **A/N: 562503**	C43	C42 S139		**LEAD**: (10) [**40CFR 63 Subpart X, #01, 1-29-1999**]; **PM**: (9) [**RULE 404, 2-7-1986**]; **ROG**: (10) [**40CFR 63 Subpart X, #01, 1-29-1999**]	C8.2, C8.3, C8.5, C8.6, C8.7, **D182.14 D182.15** D323.1, H116.2, K67.7
SCRUBBER, VENTURI, AIRPOL, MODEL BASIC C-B VENTURI, HEIGHT: 17 FT; DIAMETER: 4 FT 9 IN. A/N: 562498	**C202**	**C40 C41 C45 C203**		**LEAD: (10) [40CFR 63 Subpart X, #01, 1-29-1999]; PM: (9) [RULE 404, 2-7-1986]; ROG: (10) [40CFR 63 Subpart X, #01, 1-29-1999]**	**C8.10, C8.12 C8.13 D182.15** D323.1, H116.2, K67.7

* (1) (1A) (1B) Denotes RECLAIM emission factor
(2) (2A) (2B) Denotes RECLAIM emission rate
(3) Denotes RECLAIM concentration limit
(4) Denotes BACT emission limit
(5) (5A) (5B) Denotes command and control emission limit
(6) Denotes air toxic control rule limit
(7) Denotes NSR applicability limit
(8) (8A) (8B) Denotes 40 CFR limit (e.g. NSPS, NESHAPS, etc.)
(9) See App B for Emission Limits
(10) See section J for NESHAP/MACT requirements

** Refer to section F and G of this permit to determine the monitoring, recordkeeping and reporting requirements for this device.

FACILITY PERMIT TO OPERATE
EXIDE TECHNOLOGIES

SECTION H: PERMIT TO CONSTRUCT AND TEMPORARY PERMIT TO OPERATE

The operator shall comply with the terms and conditions set forth below:

Equipment	ID No.	Connected To	RECLAIM Source Type/ Monitoring Unit	Emissions* And Requirements	Conditions
Process 1: SECONDARY METALS, LEAD SMELTING PROCESS					
SCRUBBER, TRAY, AIRPOL, MODEL BASIC C-B VENTURI, WITH 4 TRAYS, HEIGHT: 35 FT 6 IN; DIAMETER: 11FT. A/N: 562498	**C203**	**S139 C202**		**LEAD: (10) [40CFR 63 Subpart X, #01, 1-29-1999]; PM: (9) [RULE 404, 2-7-1986]; ROG: (10) [40CFR 63 Subpart X, #01, 1-29-1999]**	**C8.11, C8.12 C8.13 D182.15** D323.1, H116.2, K67.7
STACK, COMMON TO REVERB AND CUPOLA, HEIGHT: 112 FT ; DIAMETER: **7 FT 6 IN, WITH AN EXHAUST OUTLET DIAMETER: 5 FT 5 IN. A/N: 562503**	S139	C43 **C203**		**LEAD**: 0.01 LBS/HR (6) [RULE 1420.1, 11-5-2010]	A63.1, D82.1, **D182.11 D182.14** D323.1, **E448.11** K67.9 K171.6

APPLICATION NO. 562499

Equipment	ID No.	Connected To	RECLAIM Source Type/ Monitoring Unit	Emissions* And Requirements	Conditions
Process 1: SECONDARY METALS, LEAD SMELTING PROCESS					
System 5: LEAD METAL REFINING SYSTEM					
FURNACE, POT, NO. 4, NATURAL GAS, HARD LEAD, 2.5 MMBTU/HR **A/N: 562499**	D13	C38 C39 C46 **B206**	NOX: PROCESS UNIT**; SOX: PROCESS UNIT**	**CO**: 2000 PPMV (5) [**RULE 407, 4-2-1982**]; **LEAD**: (10) [**40CFR 63 Subpart X, #01, 1-29-1999**]; **NOX**: 0.017 LBS/LB MATERIAL (1) [**RULE 2012, 5-6-2005**]; **NOX**: 0.077 LBS/LB MATERIAL (1A) [**RULE 2012, 5-6-2005**]; **NOX**: 130 LBS/MMSCF NATURAL GAS (1) [**RULE 2012, 5-6-2005**]; **PM**: (9) [**RULE 405, 2-7-1986**]; **PM**: 0.1 GRAINS/SCF (5) [**RULE 409, 8-7-1981**]; **SOX**: 0.133 LBS/LB MATERIAL (1) [**RULE 2011, 5-6-2005**]; **SOX**: 0.83 LBS/MMSCF NATURAL GAS (1) [**RULE 2011, 5-6-2005**]	A63.2, **B59.3** B295.2, B295.3, D12.8, D323.1, E71.1, E448.7, H116.2

APPLICATION NO. 562500

RECLAIM/TITLE V SIGNIFICANT PERMIT REVISION

*	(1) (1A) (1B)	Denotes RECLAIM emission factor	(2) (2A) (2B)	Denotes RECLAIM emission rate
	(3)	Denotes RECLAIM concentration limit	(4)	Denotes BACT emission limit
	(5) (5A) (5B)	Denotes command and control emission limit	(6)	Denotes air toxic control rule limit
	(7)	Denotes NSR applicability limit	(8) (8A) (8B)	Denotes 40 CFR limit (e.g. NSPS, NESHAPS, etc.)
	(9)	See App B for Emission Limits	(10)	See section J for NESHAP/MACT requirements

** Refer to section F and G of this permit to determine the monitoring, recordkeeping and reporting requirements for this device.

FACILITY PERMIT TO OPERATE
EXIDE TECHNOLOGIES

SECTION H: PERMIT TO CONSTRUCT AND TEMPORARY PERMIT TO OPERATE

The operator shall comply with the terms and conditions set forth below:

APPLICATION NO. 562501

Equipment	ID No.	Connected To	RECLAIM Source Type/ Monitoring Unit	Emissions* And Requirements	Conditions
Process 1: SECONDARY METALS, LEAD SMELTING PROCESS					
System 4: LEAD SLAG PROCESSING SYSTEM)					
HOPPER, WEIGH, CUPOLA FURNACE FEED A/N: **562501**	D126	C48		**LEAD**: (10) [**40CFR 63 Subpart X, #01, 1-29-1999**]; **PM**: (9) [**RULE 405, 2-7-1986**]	D323.1
HOPPER, CUPOLA FURNACE FEED, EMERGENCY A/N: **562501**	D127			**LEAD**: (10) [**40CFR 63 Subpart X, #01, 1-29-1999**]; **PM**: (9) [**RULE 405, 2-7-1986**]	D323.1
FURNACE, CUPOLA, COKE, NATURAL GAS, LEAD SLAG AND LEAD ACID BATTERY SCRAP, **WITH A 1 MMBTU/HR PORTABLE NATURAL GAS PRE-HEATING BURNER.** A/N: **562501**	D128	C38 C39 C44	NOX: MAJOR SOURCE** **SOX: MAJOR SOURCE****	**CO**: 2000 PPMV (5) [**RULE 407, 4-2-1982**]; **LEAD**: (10) [**40CFR 63 Subpart X, #01, 1-29-1999**]; **PM**: (9) [**RULE 405, 2-7-1986**]; **PM**: 0.022 GRAINS/SCF (8A) [**40CFR 60 Subpart L, 12-3-1976**]; **PM**: 0.1 GRAINS/SCF (5) [**RULE 409, 8-7-1981**]; **SOX**: **1.80** PPMV (3) [**RULE 2011, 12-7-1995;** *RULE 2011, 4-9-1999*]	A63.2, B59.2, B163.2, C1.2, **D12.20** **D182.14** D323.1, **E448.12** **E448.13** H116.2, K67.5 D182.6 K171.6
TAPPING PORT, LEAD A/N: **562501**	D129	C38 C39 C46		**LEAD**: (10) [**40CFR 63 Subpart X, #01, 1-29-1999**]; **PM**: (9) [**RULE 405, 2-7-1986**]	D323.1
LAUNDER, LEAD, CUPOLA TAP A/N: **562501**	D130	C38 C39 C46		**LEAD**: (10) [**40CFR 63 Subpart X, #01, 1-29-1999**]; **PM**: (9) [**RULE 405, 2-7-1986**]	D323.1
LAUNDER, LEAD, CUPOLA TAP A/N: **562501**	D131	C38 C39 C46		**LEAD**: (10) [**40CFR 63 Subpart X, #01, 1-29-1999**]; **PM**: (9) [**RULE 405, 2-7-1986**]	D323.1
TAPPING PORT, LEAD SLAG A/N: **562501**	D132	C38 C39 **C41** **C45 C174**		**LEAD**: (10) [**40CFR 63 Subpart X, #01, 1-29-1999**]; **PM**: (9) [**RULE 405, 2-7-1986**]	**D182.14** D323.1 **E448.12** **E448.14**
FUGITIVE EMISSIONS, MISCELLANEOUS, CUPOLA FURNACE THIMBLE, WITH AN AUTOMATIC FEED CHUTE COVER DOOR A/N: **562501**	D133	C38 C39 **C204**		**LEAD**: (10) [**40CFR 63 Subpart X, #01, 1-29-1999**]; **PM**: (9) [**RULE 405, 2-7-1986**]	**D182.14** **E448.12** D323.1 E448.9

* (1) (1A) (1B) Denotes RECLAIM emission factor
(2) (2A) (2B) Denotes RECLAIM emission rate
(3) Denotes RECLAIM concentration limit
(4) Denotes BACT emission limit
(5) (5A) (5B) Denotes command and control emission limit
(6) Denotes air toxic control rule limit
(7) Denotes NSR applicability limit
(8) (8A) (8B) Denotes 40 CFR limit (e.g. NSPS, NESHAPS, etc.)
(9) See App B for Emission Limits
(10) See section J for NESHAP/MACT requirements

** Refer to section F and G of this permit to determine the monitoring, recordkeeping and reporting requirements for this device.

FACILITY PERMIT TO OPERATE
EXIDE TECHNOLOGIES

SECTION H: PERMIT TO CONSTRUCT AND TEMPORARY PERMIT TO OPERATE

The operator shall comply with the terms and conditions set forth below:

APPLICATION NO. 562502

Equipment	ID No.	Connected To	RECLAIM Source Type/ Monitoring Unit	Emissions* And Requirements	Conditions
Process 1: SECONDARY METALS, LEAD SMELTING PROCESS					
System 5: LEAD METAL REFINING SYSTEM					
FURNACE, POT, NO. 2, NATURAL GAS, HARD LEAD, 2.5 MMBTU/HR **A/N: 562502**	D9	C38 C39 **C41 C45 B206 C174**	NOX: PROCESS UNIT**; SOX: PROCESS UNIT**	**CO**: 2000 PPMV (5) [**RULE 407, 4-2-1982**]; **LEAD**: (10) [**40CFR 63 Subpart X, #01, 1-29-1999**]; **NOX**: 0.017 LBS/LB MATERIAL (1) [**RULE 2012, 5-6-2005**]; **NOX**: 0.077 LBS/LB MATERIAL (1A) [**RULE 2012, 5-6-2005**]; **NOX**: 130 LBS/MMSCF NATURAL GAS (1) [**RULE 2012, 5-6-2005**]; **PM**: (9) [**RULE 405, 2-7-1986**]; **PM**: 0.1 GRAINS/SCF (5) [**RULE 409, 8-7-1981**]; **SOX**: 0.133 LBS/LB MATERIAL (1) [**RULE 2011, 5-6-2005**]; **SOX**: 0.83 LBS/MMSCF NATURAL GAS (1) [**RULE 2011, 5-6-2005**]	A63.2, B295.2, B295.3, D12.8, D323.1, E71.1, E448.7, **E448.12 E448.14** H116.2

* (1) (1A) (1B) Denotes RECLAIM emission factor
(2) (2A) (2B) Denotes RECLAIM emission rate
(3) Denotes RECLAIM concentration limit
(4) Denotes BACT emission limit
(5) (5A) (5B) Denotes command and control emission limit
(6) Denotes air toxic control rule limit
(7) Denotes NSR applicability limit
(8) (8A) (8B) Denotes 40 CFR limit (e.g. NSPS, NESHAPS, etc.)
(9) See App B for Emission Limits
(10) See section J for NESHAP/MACT requirements

** Refer to section F and G of this permit to determine the monitoring, recordkeeping and reporting requirements for this device.

FACILITY PERMIT TO OPERATE
EXIDE TECHNOLOGIES

SECTION H: PERMIT TO CONSTRUCT AND TEMPORARY PERMIT TO OPERATE

The operator shall comply with the terms and conditions set forth below:

APPLICATION NO. 562504

Equipment	ID No.	Connected To	RECLAIM Source Type/ Monitoring Unit	Emissions* And Requirements	Conditions
Process 1: SECONDARY METALS, LEAD SMELTING PROCESS					
System 5: LEAD METAL REFINING SYSTEM					
FURNACE, POT, NO. 3, NATURAL GAS, HARD LEAD, 2.5 MMBTU/HR **A/N: 562504**	D11	C38 C39 C46 **B206**	NOX: PROCESS UNIT**; SOX: PROCESS UNIT**	**CO**: 2000 PPMV (5) [**RULE 407, 4-2-1982**]; **LEAD**: (10) [**40CFR 63 Subpart X, #01, 1-29-1999**]; **NOX**: 0.017 LBS/LB MATERIAL (1) [**RULE 2012, 5-6-2005**]; **NOX**: 0.077 LBS/LB MATERIAL (1A) [**RULE 2012, 5-6-2005**]; **NOX**: 130 LBS/MMSCF NATURAL GAS (1) [**RULE 2012, 5-6-2005**]; **PM**: (9) [**RULE 405, 2-7-1986**]; **PM**: 0.1 GRAINS/SCF (5) [**RULE 409, 8-7-1981**]; **SOX**: 0.133 LBS/LB MATERIAL (1) [**RULE 2011, 5-6-2005**]; **SOX**: 0.83 LBS/MMSCF NATURAL GAS (1) [**RULE 2011, 5-6-2005**]	A63.2, **B59.3**, B295.2, B295.3, D12.8, D323.1, E71.1, E448.7, H116.2

* (1) (1A) (1B) Denotes RECLAIM emission factor
(2) (2A) (2B) Denotes RECLAIM emission rate
(3) Denotes RECLAIM concentration limit
(4) Denotes BACT emission limit
(5) (5A) (5B) Denotes command and control emission limit
(6) Denotes air toxic control rule limit
(7) Denotes NSR applicability limit
(8) (8A) (8B) Denotes 40 CFR limit (e.g. NSPS, NESHAPS, etc.)
(9) See App B for Emission Limits
(10) See section J for NESHAP/MACT requirements

** Refer to section F and G of this permit to determine the monitoring, recordkeeping and reporting requirements for this device.

FACILITY PERMIT TO OPERATE
EXIDE TECHNOLOGIES

SECTION H: PERMIT TO CONSTRUCT AND TEMPORARY PERMIT TO OPERATE

The operator shall comply with the terms and conditions set forth below:

APPLICATION NO. 562505

Equipment	ID No.	Connected To	RECLAIM Source Type/ Monitoring Unit	Emissions* And Requirements	Conditions
Process 1: SECONDARY METALS, LEAD SMELTING PROCESS					
System 5: LEAD METAL REFINING SYSTEM					
FURNACE, POT, NO. 5, NATURAL GAS, SPECIALTY LEAD, 2.5 MMBTU/HR **A/N: 562505**	D15	C38 C39 C46 **B206**	NOX: PROCESS UNIT**; SOX: PROCESS UNIT**	**CO**: 2000 PPMV (5) [**RULE 407, 4-2-1982**]; **LEAD**: (10) [**40CFR 63 Subpart X, #01, 1-29-1999**]; **NOX**: 0.017 LBS/LB MATERIAL (1) [**RULE 2012, 5-6-2005**]; **NOX**: 0.077 LBS/LB MATERIAL (1A) [**RULE 2012, 5-6-2005**]; **NOX**: 130 LBS/MMSCF NATURAL GAS (1) [**RULE 2012, 5-6-2005**]; **PM**: (9) [**RULE 405, 2-7-1986**]; **PM**: 0.1 GRAINS/SCF (5) [**RULE 409, 8-7-1981**]; **SOX**: 0.133 LBS/LB MATERIAL (1) [**RULE 2011, 5-6-2005**]; **SOX**: 0.83 LBS/MMSCF NATURAL GAS (1) [**RULE 2011, 5-6-2005**]	A63.2, **B59.3**, B295.2, B295.3, D12.8, D323.1, E71.1, E448.7, H116.2

* (1) (1A) (1B) Denotes RECLAIM emission factor
(2) (2A) (2B) Denotes RECLAIM emission rate
(3) Denotes RECLAIM concentration limit
(4) Denotes BACT emission limit
(5) (5A) (5B) Denotes command and control emission limit
(6) Denotes air toxic control rule limit
(7) Denotes NSR applicability limit
(8) (8A) (8B) Denotes 40 CFR limit (e.g. NSPS, NESHAPS, etc.)
(9) See App B for Emission Limits
(10) See section J for NESHAP/MACT requirements

** Refer to section F and G of this permit to determine the monitoring, recordkeeping and reporting requirements for this device.

FACILITY PERMIT TO OPERATE
EXIDE TECHNOLOGIES

SECTION H: PERMIT TO CONSTRUCT AND TEMPORARY PERMIT TO OPERATE

The operator shall comply with the terms and conditions set forth below:

APPLICATION NO. 562506

Equipment	ID No.	Connected To	RECLAIM Source Type/ Monitoring Unit	Emissions* And Requirements	Conditions
Process 1: SECONDARY METALS, LEAD SMELTING PROCESS					
System 5: LEAD METAL REFINING SYSTEM					
FURNACE, POT, NO. 6, NATURAL GAS, SOFT LEAD, 2.5 MMBTU/HR **A/N: 562506**	D24	C38 C39 C47 **B206**	NOX: PROCESS UNIT**; SOX: PROCESS UNIT**	**CO**: 2000 PPMV (5) [**RULE 407, 4-2-1982**]; **LEAD**: (10) [**40CFR 63 Subpart X, #01, 1-29-1999**]; **NOX**: 0.017 LBS/LB MATERIAL (1) [**RULE 2012, 12-7-1995;** *RULE 2012, 4-9-1999*]; **NOX**: 130 LBS/MMSCF NATURAL GAS (1) [**RULE 2012, 12-7-1995;** *RULE 2012, 4-9-1999*]; **PM**: (9) [**RULE 405, 2-7-1986**]; **PM**: 0.1 GRAINS/SCF (5) [**RULE 409, 8-7-1981**]; **SOX**: 0.133 LBS/LB MATERIAL (1) [**RULE 2011, 12-7-1995;** *RULE 2011, 4-9-1999*]; **SOX**: 0.83 LBS/MMSCF NATURAL GAS (1) [**RULE 2011, 12-7-1995;** *RULE 2011, 4-9-1999*]	A63.2, **B59.3**, B295.2, B295.3, D12.8, D323.1, E71.1, E448.7, H116.2

* (1) (1A) (1B) Denotes RECLAIM emission factor
(2) (2A) (2B) Denotes RECLAIM emission rate
(3) Denotes RECLAIM concentration limit
(4) Denotes BACT emission limit
(5) (5A) (5B) Denotes command and control emission limit
(6) Denotes air toxic control rule limit
(7) Denotes NSR applicability limit
(8) (8A) (8B) Denotes 40 CFR limit (e.g. NSPS, NESHAPS, etc.)
(9) See App B for Emission Limits
(10) See section J for NESHAP/MACT requirements

** Refer to section F and G of this permit to determine the monitoring, recordkeeping and reporting requirements for this device.

FACILITY PERMIT TO OPERATE
EXIDE TECHNOLOGIES

SECTION H: PERMIT TO CONSTRUCT AND TEMPORARY PERMIT TO OPERATE

The operator shall comply with the terms and conditions set forth below:

APPLICATION NO. 562507

Equipment	ID No.	Connected To	RECLAIM Source Type/ Monitoring Unit	Emissions* And Requirements	Conditions
Process 1: SECONDARY METALS, LEAD SMELTING PROCESS					
System 5: LEAD METAL REFINING SYSTEM					
FURNACE, POT, NO. 7, NATURAL GAS, SOFT LEAD, 2.5 MMBTU/HR **A/N: 562507**	D26	C38 C39 C47 **B206**	NOX: PROCESS UNIT**; SOX: PROCESS UNIT**	**CO**: 2000 PPMV (5) [**RULE 407, 4-2-1982**]; **LEAD**: (10) [**40CFR 63 Subpart X, #01, 1-29-1999**]; **NOX**: 0.017 LBS/LB MATERIAL (1) [**RULE 2012, 12-7-1995;** *RULE 2012, 4-9-1999*]; **NOX**: 130 LBS/MMSCF NATURAL GAS (1) [**RULE 2012, 12-7-1995;** *RULE 2012, 4-9-1999*]; **PM**: (9) [**RULE 405, 2-7-1986**]; **PM**: 0.1 GRAINS/SCF (5) [**RULE 409, 8-7-1981**]; **SOX**: 0.133 LBS/LB MATERIAL (1) [**RULE 2011, 12-7-1995;** *RULE 2011, 4-9-1999*]; **SOX**: 0.83 LBS/MMSCF NATURAL GAS (1) [**RULE 2011, 12-7-1995;** *RULE 2011, 4-9-1999*]	A63.2, **B59.3**, B295.2, B295.3, D12.8, D323.1, E71.1, E448.7, H116.2

* (1) (1A) (1B) Denotes RECLAIM emission factor
(2) (2A) (2B) Denotes RECLAIM emission rate
(3) Denotes RECLAIM concentration limit
(4) Denotes BACT emission limit
(5) (5A) (5B) Denotes command and control emission limit
(6) Denotes air toxic control rule limit
(7) Denotes NSR applicability limit
(8) (8A) (8B) Denotes 40 CFR limit (e.g. NSPS, NESHAPS, etc.)
(9) See App B for Emission Limits
(10) See section J for NESHAP/MACT requirements

** Refer to section F and G of this permit to determine the monitoring, recordkeeping and reporting requirements for this device.

FACILITY PERMIT TO OPERATE
EXIDE TECHNOLOGIES

SECTION H: PERMIT TO CONSTRUCT AND TEMPORARY PERMIT TO OPERATE

The operator shall comply with the terms and conditions set forth below:

APPLICATION NO. 562508

Equipment	ID No.	Connected To	RECLAIM Source Type/ Monitoring Unit	Emissions* And Requirements	Conditions
Process 1: SECONDARY METALS, LEAD SMELTING PROCESS					
System 5: LEAD METAL REFINING SYSTEM					
FURNACE, POT, NO. 8, NATURAL GAS, SOFT LEAD, 2.5 MMBTU/HR **A/N: 562508**	D28	C38 C39 C47 **B206**	NOX: PROCESS UNIT**; SOX: PROCESS UNIT**	**CO**: 2000 PPMV (5) [**RULE 407, 4-2-1982**]; **LEAD**: (10) [**40CFR 63 Subpart X, #01, 1-29-1999**]; **NOX**: 0.017 LBS/LB MATERIAL (1) [**RULE 2012, 12-7-1995;** *RULE 2012, 4-9-1999*]; **NOX**: 130 LBS/MMSCF NATURAL GAS (1) [**RULE 2012, 12-7-1995;** *RULE 2012, 4-9-1999*]; **PM**: (9) [**RULE 405, 2-7-1986**]; **PM**: 0.1 GRAINS/SCF (5) [**RULE 409, 8-7-1981**]; **SOX**: 0.133 LBS/LB MATERIAL (1) [**RULE 2011, 12-7-1995;** *RULE 2011, 4-9-1999*]; **SOX**: 0.83 LBS/MMSCF NATURAL GAS (1) [**RULE 2011, 12-7-1995;** *RULE 2011, 4-9-1999*]	A63.2, **B59.3**, B295.2, B295.3, D12.8, D323.1, E71.1, E448.7, H116.2

* (1) (1A) (1B) Denotes RECLAIM emission factor
(2) (2A) (2B) Denotes RECLAIM emission rate
(3) Denotes RECLAIM concentration limit
(4) Denotes BACT emission limit
(5) (5A) (5B) Denotes command and control emission limit
(6) Denotes air toxic control rule limit
(7) Denotes NSR applicability limit
(8) (8A) (8B) Denotes 40 CFR limit (e.g. NSPS, NESHAPS, etc.)
(9) See App B for Emission Limits
(10) See section J for NESHAP/MACT requirements

** Refer to section F and G of this permit to determine the monitoring, recordkeeping and reporting requirements for this device.

FACILITY PERMIT TO OPERATE
EXIDE TECHNOLOGIES

SECTION H: PERMIT TO CONSTRUCT AND TEMPORARY PERMIT TO OPERATE

The operator shall comply with the terms and conditions set forth below:

APPLICATION NO. 562509

Equipment	ID No.	Connected To	RECLAIM Source Type/ Monitoring Unit	Emissions* And Requirements	Conditions
Process 1: SECONDARY METALS, LEAD SMELTING PROCESS					
System 5: LEAD METAL REFINING SYSTEM					
FURNACE, POT, NO. 9, NATURAL GAS, SOFT LEAD, 2.5 MMBTU/HR **A/N: 562509**	D30	C38 C39 C47 **B206**	NOX: PROCESS UNIT**; SOX: PROCESS UNIT**	**CO**: 2000 PPMV (5) [**RULE 407, 4-2-1982**]; **LEAD**: (10) [**40CFR 63 Subpart X, #01, 1-29-1999**]; **NOX**: 0.017 LBS/LB MATERIAL (1) [**RULE 2012, 12-7-1995;** *RULE 2012, 4-9-1999*]; **NOX**: 130 LBS/MMSCF NATURAL GAS (1) [**RULE 2012, 12-7-1995;** *RULE 2012, 4-9-1999*]; **PM**: (9) [**RULE 405, 2-7-1986**]; **PM**: 0.1 GRAINS/SCF (5) [**RULE 409, 8-7-1981**]; **SOX**: 0.133 LBS/LB MATERIAL (1) [**RULE 2011, 12-7-1995;** *RULE 2011, 4-9-1999*]; **SOX**: 0.83 LBS/MMSCF NATURAL GAS (1) [**RULE 2011, 12-7-1995;** *RULE 2011, 4-9-1999*]	A63.2, **B59.3**, B295.2, B295.3, D12.8, D323.1, E71.1, E448.7, H116.2

* (1) (1A) (1B) Denotes RECLAIM emission factor
(2) (2A) (2B) Denotes RECLAIM emission rate
(3) Denotes RECLAIM concentration limit
(4) Denotes BACT emission limit
(5) (5A) (5B) Denotes command and control emission limit
(6) Denotes air toxic control rule limit
(7) Denotes NSR applicability limit
(8) (8A) (8B) Denotes 40 CFR limit (e.g. NSPS, NESHAPS, etc.)
(9) See App B for Emission Limits
(10) See section J for NESHAP/MACT requirements

** Refer to section F and G of this permit to determine the monitoring, recordkeeping and reporting requirements for this device.

FACILITY PERMIT TO OPERATE
EXIDE TECHNOLOGIES

SECTION H: PERMIT TO CONSTRUCT AND TEMPORARY PERMIT TO OPERATE

The operator shall comply with the terms and conditions set forth below:

APPLICATION NO. 562510

Equipment	ID No.	Connected To	RECLAIM Source Type/ Monitoring Unit	Emissions* And Requirements	Conditions
Process 1: SECONDARY METALS, LEAD SMELTING PROCESS					
System 5: LEAD METAL REFINING SYSTEM					
FURNACE, POT, A, NATURAL GAS, HARD LEAD, 2.5 MMBTU/HR **A/N: 562510**	D17	C38 C39 C46 **B206**	NOX: PROCESS UNIT**; SOX: PROCESS UNIT**	**CO**: 2000 PPMV (5) [**RULE 407, 4-2-1982**]; **LEAD**: (10) [**40CFR 63 Subpart X, #01, 1-29-1999**]; **NOX**: 0.017 LBS/LB MATERIAL (1) [**RULE 2012, 5-6-2005**]; **NOX**: 0.077 LBS/LB MATERIAL (1A) [**RULE 2012, 5-6-2005**]; **NOX**: 130 LBS/MMSCF NATURAL GAS (1) [**RULE 2012, 5-6-2005**]; **PM**: (9) [**RULE 405, 2-7-1986**]; **PM**: 0.1 GRAINS/SCF (5) [**RULE 409, 8-7-1981**]; **SOX**: 0.133 LBS/LB MATERIAL (1) [**RULE 2011, 5-6-2005**]; **SOX**: 0.83 LBS/MMSCF NATURAL GAS (1) [**RULE 2011, 5-6-2005**]	A63.2, **B59.3**, B295.2, B295.3, D12.8, D323.1, E71.1, E448.7, H116.2

* (1) (1A) (1B) Denotes RECLAIM emission factor
(2) (2A) (2B) Denotes RECLAIM emission rate
(3) Denotes RECLAIM concentration limit
(4) Denotes BACT emission limit
(5) (5A) (5B) Denotes command and control emission limit
(6) Denotes air toxic control rule limit
(7) Denotes NSR applicability limit
(8) (8A) (8B) Denotes 40 CFR limit (e.g. NSPS, NESHAPS, etc.)
(9) See App B for Emission Limits
(10) See section J for NESHAP/MACT requirements

** Refer to section F and G of this permit to determine the monitoring, recordkeeping and reporting requirements for this device.

FACILITY PERMIT TO OPERATE
EXIDE TECHNOLOGIES

SECTION H: PERMIT TO CONSTRUCT AND TEMPORARY PERMIT TO OPERATE

The operator shall comply with the terms and conditions set forth below:

APPLICATION NO. 562511

Equipment	ID No.	Connected To	RECLAIM Source Type/ Monitoring Unit	Emissions* And Requirements	Conditions
Process 1: SECONDARY METALS, LEAD SMELTING PROCESS					
System 5: LEAD METAL REFINING SYSTEM					
FURNACE, POT, B, NATURAL GAS, HARD LEAD, 2.5 MMBTU/HR **A/N: 562511**	D19	C38 C39 C46 **B206**	NOX: PROCESS UNIT**; SOX: PROCESS UNIT**	**CO**: 2000 PPMV (5) [**RULE 407, 4-2-1982**]; **LEAD**: (10) [**40CFR 63 Subpart X, #01, 1-29-1999**]; **NOX**: 0.017 LBS/LB MATERIAL (1) [**RULE 2012, 5-6-2005**]; **NOX**: 0.077 LBS/LB MATERIAL (1A) [**RULE 2012, 5-6-2005**]; **NOX**: 130 LBS/MMSCF NATURAL GAS (1) [**RULE 2012, 5-6-2005**]; **PM**: (9) [**RULE 405, 2-7-1986**]; **PM**: 0.1 GRAINS/SCF (5) [**RULE 409, 8-7-1981**]; **SOX**: 0.133 LBS/LB MATERIAL (1) [**RULE 2011, 5-6-2005**]; **SOX**: 0.83 LBS/MMSCF NATURAL GAS (1) [**RULE 2011, 5-6-2005**]	A63.2, **B59.3**, B295.2, B295.3, D12.8, D323.1, E71.1, E448.7, H116.2

* (1) (1A) (1B) Denotes RECLAIM emission factor
(2) (2A) (2B) Denotes RECLAIM emission rate
(3) Denotes RECLAIM concentration limit
(4) Denotes BACT emission limit
(5) (5A) (5B) Denotes command and control emission limit
(6) Denotes air toxic control rule limit
(7) Denotes NSR applicability limit
(8) (8A) (8B) Denotes 40 CFR limit (e.g. NSPS, NESHAPS, etc.)
(9) See App B for Emission Limits
(10) See section J for NESHAP/MACT requirements

** Refer to section F and G of this permit to determine the monitoring, recordkeeping and reporting requirements for this device.

FACILITY PERMIT TO OPERATE
EXIDE TECHNOLOGIES

SECTION H: PERMIT TO CONSTRUCT AND TEMPORARY PERMIT TO OPERATE

The operator shall comply with the terms and conditions set forth below:

APPLICATION NO. 562512

Equipment	ID No.	Connected To	RECLAIM Source Type/ Monitoring Unit	Emissions* And Requirements	Conditions
Process 1: SECONDARY METALS, LEAD SMELTING PROCESS					
System 5: LEAD METAL REFINING SYSTEM					
FURNACE, POT, E, NATURAL GAS, SOFT LEAD, 2.5 MMBTU/HR **A/N: 562512**	D34	C38 C39 C47 **B206**	NOX: PROCESS UNIT**; SOX: PROCESS UNIT**	**CO**: 2000 PPMV (5) [**RULE 407, 4-2-1982**]; **LEAD**: (10) [**40CFR 63 Subpart X, #01, 1-29-1999**]; **NOX**: 0.017 LBS/LB MATERIAL (1) [**RULE 2012, 5-6-2005**]; **NOX**: 0.077 LBS/LB MATERIAL (1A) [**RULE 2012, 5-6-2005**]; **NOX**: 130 LBS/MMSCF NATURAL GAS (1) [**RULE 2012, 5-6-2005**]; **PM**: (9) [**RULE 405, 2-7-1986**]; **PM**: 0.1 GRAINS/SCF (5) [**RULE 409, 8-7-1981**]; **SOX**: 0.133 LBS/LB MATERIAL (1) [**RULE 2011, 5-6-2005**]; **SOX**: 0.83 LBS/MMSCF NATURAL GAS (1) [**RULE 2011, 5-6-2005**]	A63.2, **B59.3**, B295.2, B295.3, D12.8, D323.1, E71.1, E448.7, H116.2

* (1) (1A) (1B) Denotes RECLAIM emission factor
(2) (2A) (2B) Denotes RECLAIM emission rate
(3) Denotes RECLAIM concentration limit
(4) Denotes BACT emission limit
(5) (5A) (5B) Denotes command and control emission limit
(6) Denotes air toxic control rule limit
(7) Denotes NSR applicability limit
(8) (8A) (8B) Denotes 40 CFR limit (e.g. NSPS, NESHAPS, etc.)
(9) See App B for Emission Limits
(10) See section J for NESHAP/MACT requirements

** Refer to section F and G of this permit to determine the monitoring, recordkeeping and reporting requirements for this device.

FACILITY PERMIT TO OPERATE
EXIDE TECHNOLOGIES

SECTION H: PERMIT TO CONSTRUCT AND TEMPORARY PERMIT TO OPERATE

The operator shall comply with the terms and conditions set forth below:

APPLICATION NO. 562513

Equipment	ID No.	Connected To	RECLAIM Source Type/ Monitoring Unit	Emissions* And Requirements	Conditions
Process 1: SECONDARY METALS, LEAD SMELTING PROCESS					
System 5: LEAD METAL REFINING SYSTEM					
FURNACE, POT, F, NATURAL GAS, SOFT LEAD, 2.5 MMBTU/HR **A/N: 562513**	D36	C38 C39 C47 **B206**	NOX: PROCESS UNIT**; SOX: PROCESS UNIT**	**CO**: 2000 PPMV (5) [**RULE 407, 4-2-1982**]; **LEAD**: (10) [**40CFR 63 Subpart X, #01, 1-29-1999**]; **NOX**: 0.017 LBS/LB MATERIAL (1) [**RULE 2012, 5-6-2005**]; **NOX**: 0.077 LBS/LB MATERIAL (1A) [**RULE 2012, 5-6-2005**]; **NOX**: 130 LBS/MMSCF NATURAL GAS (1) [**RULE 2012, 5-6-2005**]; **PM**: (9) [**RULE 405, 2-7-1986**]; **PM**: 0.1 GRAINS/SCF (5) [**RULE 409, 8-7-1981**]; **SOX**: 0.133 LBS/LB MATERIAL (1) [**RULE 2011, 5-6-2005**]; **SOX**: 0.83 LBS/MMSCF NATURAL GAS (1) [**RULE 2011, 5-6-2005**]	A63.2, **B59.3**, B295.2, B295.3, D12.8, D323.1, E71.1, E448.7, H116.2
MANIFOLD, POT FURNACE BURNER EXHAUST, BASEMENT BURNER ROOM, WITH A 15-H.P. EXHAUST BLOWER	**B206**	**D7 D9 D11 D13 D15 D17 D19 D24 D26 D28 D30 D32 D34 D36 C156 C157**			

* (1) (1A) (1B) Denotes RECLAIM emission factor
(2) (2A) (2B) Denotes RECLAIM emission rate
(3) Denotes RECLAIM concentration limit
(4) Denotes BACT emission limit
(5) (5A) (5B) Denotes command and control emission limit
(6) Denotes air toxic control rule limit
(7) Denotes NSR applicability limit
(8) (8A) (8B) Denotes 40 CFR limit (e.g. NSPS, NESHAPS, etc.)
(9) See App B for Emission Limits
(10) See section J for NESHAP/MACT requirements

** Refer to section F and G of this permit to determine the monitoring, recordkeeping and reporting requirements for this device.

FACILITY PERMIT TO OPERATE
EXIDE TECHNOLOGIES

SECTION H: PERMIT TO CONSTRUCT AND TEMPORARY PERMIT TO OPERATE

The operator shall comply with the terms and conditions set forth below:

APPLICATION NO. 562514

Equipment	ID No.	Connected To	RECLAIM Source Type/ Monitoring Unit	Emissions* And Requirements	Conditions
Process 1: SECONDARY METALS, LEAD SMELTING PROCESS					
System 5: LEAD METAL REFINING SYSTEM					
FURNACE, POT, G, NATURAL GAS, SOFT LEAD, 2.5 MMBTU/HR **A/N: 562514**	D32	C38 C39 C47 **B206**	NOX: PROCESS UNIT**; SOX: PROCESS UNIT**	**CO**: 2000 PPMV (5) [**RULE 407, 4-2-1982**]; **LEAD**: (10) [**40CFR 63 Subpart X, #01, 1-29-1999**]; **NOX**: 0.017 LBS/LB MATERIAL (1) [**RULE 2012, 5-6-2005**]; **NOX**: 0.077 LBS/LB MATERIAL (1A) [**RULE 2012, 5-6-2005**]; **NOX**: 130 LBS/MMSCF NATURAL GAS (1) [**RULE 2012, 5-6-2005**]; **PM**: (9) [**RULE 405, 2-7-1986**]; **PM**: 0.1 GRAINS/SCF (5) [**RULE 409, 8-7-1981**]; **SOX**: 0.133 LBS/LB MATERIAL (1) [**RULE 2011, 5-6-2005**]; **SOX**: 0.83 LBS/MMSCF NATURAL GAS (1) [**RULE 2011, 5-6-2005**]	A63.2, **B59.3**, B295.2, B295.3, D12.8, D323.1, E71.1, E448.7, H116.2

* (1) (1A) (1B) Denotes RECLAIM emission factor
(2) (2A) (2B) Denotes RECLAIM emission rate
(3) Denotes RECLAIM concentration limit
(4) Denotes BACT emission limit
(5) (5A) (5B) Denotes command and control emission limit
(6) Denotes air toxic control rule limit
(7) Denotes NSR applicability limit
(8) (8A) (8B) Denotes 40 CFR limit (e.g. NSPS, NESHAPS, etc.)
(9) See App B for Emission Limits
(10) See section J for NESHAP/MACT requirements

** Refer to section F and G of this permit to determine the monitoring, recordkeeping and reporting requirements for this device.

FACILITY PERMIT TO OPERATE
EXIDE TECHNOLOGIES

SECTION H: PERMIT TO CONSTRUCT AND TEMPORARY PERMIT TO OPERATE

The operator shall comply with the terms and conditions set forth below:

APPLICATION NO. 562515

Equipment	ID No.	Connected To	RECLAIM Source Type/ Monitoring Unit	Emissions* And Requirements	Conditions
Process 1: SECONDARY METALS, LEAD SMELTING PROCESS					
System 5: LEAD METAL REFINING SYSTEM					
FURNACE, POT, NO. 1, NATURAL GAS, HARD LEAD, 2.5 MMBTU/HR **A/N: 562515**	D7	C38 C39 **C41 C45 B206 C174**	NOX: PROCESS UNIT**; SOX: PROCESS UNIT**	**CO**: 2000 PPMV (5) [**RULE 407, 4-2-1982**]; **LEAD**: (10) [**40CFR 63 Subpart X, #01, 1-29-1999**]; **NOX**: 0.017 LBS/LB MATERIAL (1) [**RULE 2012, 5-6-2005**]; **NOX**: 0.077 LBS/LB MATERIAL (1A) [**RULE 2012, 5-6-2005**]; **NOX**: 130 LBS/MMSCF NATURAL GAS (1) [**RULE 2012, 5-6-2005**]; **PM**: (9) [**RULE 405, 2-7-1986**]; **PM**: 0.1 GRAINS/SCF (5) [**RULE 409, 8-7-1981**]; **SOX**: 0.133 LBS/LB MATERIAL (1) [**RULE 2011, 5-6-2005**]; **SOX**: 0.83 LBS/MMSCF NATURAL GAS (1) [**RULE 2011, 5-6-2005**]	A63.2, B295.2, B295.3, D12.8, D323.1, E71.1, E448.7, **E448.12 E448.14** H116.2

* (1) (1A) (1B) Denotes RECLAIM emission factor
(2) (2A) (2B) Denotes RECLAIM emission rate
(3) Denotes RECLAIM concentration limit
(4) Denotes BACT emission limit
(5) (5A) (5B) Denotes command and control emission limit
(6) Denotes air toxic control rule limit
(7) Denotes NSR applicability limit
(8) (8A) (8B) Denotes 40 CFR limit (e.g. NSPS, NESHAPS, etc.)
(9) See App B for Emission Limits
(10) See section J for NESHAP/MACT requirements

** Refer to section F and G of this permit to determine the monitoring, recordkeeping and reporting requirements for this device.

FACILITY PERMIT TO OPERATE
EXIDE TECHNOLOGIES

SECTION H: PERMIT TO CONSTRUCT AND TEMPORARY PERMIT TO OPERATE

The operator shall comply with the terms and conditions set forth below:

APPLICATION NO. 564346

Equipment	ID No.	Connected To	RECLAIM Source Type/ Monitoring Unit	Emissions* And Requirements	Conditions
Process 1: SECONDARY METALS, LEAD SMELTING PROCESS					
System 3: LEAD SMELTING SYSTEM					
CONVEYOR, SCREW, FEED **A/N: 564346**	D197	C38 C39 C47		**LEAD**: (10) [**40CFR 63 Subpart X, #01, 1-29-1999**]; **PM**: (9) [**RULE 404, 2-7-1986**]	D323.1
CONVEYOR, SCREW, FEED A/N: 564346	**D198**	**C38 C39 C47**		**LEAD**: (10) [**40CFR 63 Subpart X, #01, 1-29-1999**]; **PM**: (9) [**RULE 404, 2-7-1986**]	D323.1
FURNACE, REVERBATORY, NATURAL GAS, LEAD ACID BATTERY SCRAP, 30 MMBTU/HR **A/N: 564346**	D119	C38 C39 D135	NOX: MAJOR SOURCE** **SOX: MAJOR SOURCE****	**CO**: 2000 PPMV (5) [**RULE 407, 4-2-1982**]; **LEAD**: (10) [**40CFR 63 Subpart X, #01, 1-29-1999**]; **PM**: (9) [**RULE 405, 2-7-1986**]; **PM**: 0.022 GRAINS/SCF (8A) [**40CFR 60 Subpart L, 12-3-1976**]; **PM**: 0.1 GRAINS/SCF (5) [**RULE 409, 8-7-1981**]; **SOX**: **1.80** PPMV (3) [**RULE 2011, 12-7-1995;** *RULE 2011, 4-9-1999*]	A63.2, B59.1, B163.1, C1.3, C1.4, C303.1, D12.2, D12.3, D12.4, D12.8, **D12.20** D323.1, **E448.13** H116.2, K67.11
TAPPING PORT, LEAD **A/N: 564346**	D120	C38 C39 C47		**LEAD**: (10) [**40CFR 63 Subpart X, #01, 1-29-1999**]; **PM**: (9) [**RULE 405, 2-7-1986**]	D323.1
LAUNDER, LEAD, REVERB TAP **A/N: 564346**	D121	C38 C39 C47		**LEAD**: (10) [**40CFR 63 Subpart X, #01, 1-29-1999**]; **PM**: (9) [**RULE 405, 2-7-1986**]	D323.1
LAUNDER, LEAD, REVERB TAP **A/N: 564346**	D122	C38 C39 C47		**LEAD**: (10) [**40CFR 63 Subpart X, #01, 1-29-1999**]; **PM**: (9) [**RULE 405, 2-7-1986**]	D323.1
LAUNDER, LEAD, REVERB TAP **A/N: 564346**	D123	C38 C39 C47		**LEAD**: (10) [**40CFR 63 Subpart X, #01, 1-29-1999**]; **PM**: (9) [**RULE 405, 2-7-1986**]	D323.1
TAPPING PORT, LEAD SLAG **A/N: 564346**	D124	C38 C39 C47		**LEAD**: (10) [**40CFR 63 Subpart X, #01, 1-29-1999**]; **PM**: (9) [**RULE 405, 2-7-1986**]	D323.1
FUGITIVE EMISSIONS, MISCELLANEOUS, SLAG HANDLING SYSTEM **A/N: 564346**	D125	C38 C39 C47		**LEAD**: (10) [**40CFR 63 Subpart X, #01, 1-29-1999**]; **PM**: (9) [**RULE 405, 2-7-1986**]	D323.1

* (1) (1A) (1B) Denotes RECLAIM emission factor
(2) (2A) (2B) Denotes RECLAIM emission rate
(3) Denotes RECLAIM concentration limit
(4) Denotes BACT emission limit
(5) (5A) (5B) Denotes command and control emission limit
(6) Denotes air toxic control rule limit
(7) Denotes NSR applicability limit
(8) (8A) (8B) Denotes 40 CFR limit (e.g. NSPS, NESHAPS, etc.)
(9) See App B for Emission Limits
(10) See section J for NESHAP/MACT requirements

** Refer to section F and G of this permit to determine the monitoring, recordkeeping and reporting requirements for this device.

FACILITY PERMIT TO OPERATE
EXIDE TECHNOLOGIES

SECTION H: PERMIT TO CONSTRUCT AND TEMPORARY PERMIT TO OPERATE

The operator shall comply with the terms and conditions set forth below:

APPLICATION NO. 564348

Equipment	ID No.	Connected To	RECLAIM Source Type/ Monitoring Unit	Emissions* And Requirements	Conditions
Process 1: SECONDARY METALS, LEAD SMELTING PROCESS					
System 8: CUPOLA AND HARD LEAD REFINERY FURNACES APCS					
BAGHOUSE, WITH 450 HP BLOWER, 64000 SQ.FT. **A/N: 564348**	C46	D8 D10 D11 D12 D13 D14 D15 D16 D17 D18 D19 D20 D129 D130 D131 D133 C177 C196		**LEAD**: (10) [**40CFR 63 Subpart X, #01, 1-29-1999**]; **PM**: (9) [**RULE 404, 2-7-1986**]	D12.6, D12.7, D12.10, D12.11, D182.10, D381.1, E102.1, E193.1, H116.1, H116.2, H116.4, K67.3, K171.7
DUST COLLECTOR, HEPA, 8 SECTIONS, WITH 72 PRE-FILTERS TOTAL, EACH 2 FT. W. X 2 FT. L. X 2 INCHES THICK, WITH, 72 HEPA FILTERS TOTAL, EACH 2 FT. W. X 2 FT. L. X 1 FT. THICK **A/N: 564348**	C196	C46 S140		**LEAD**: (10) [**40CFR 63 Subpart X, #01, 1-29-1999**]; **PM**: (9) [**RULE 404, 2-7-1986**]	D12.19, D182.10, D323.1, E102.1, E448.1, H116.1, H116.2, K171.7
STACK, HEIGHT: 112 FT ; DIAMETER: 6 FT 11 IN **A/N: 564348**	S140	C196			D182.10, **D182.11** D381.1 **E448.11** K171.7

* (1) (1A) (1B) Denotes RECLAIM emission factor
(2) (2A) (2B) Denotes RECLAIM emission rate
(3) Denotes RECLAIM concentration limit
(4) Denotes BACT emission limit
(5) (5A) (5B) Denotes command and control emission limit
(6) Denotes air toxic control rule limit
(7) Denotes NSR applicability limit
(8) (8A) (8B) Denotes 40 CFR limit (e.g. NSPS, NESHAPS, etc.)
(9) See App B for Emission Limits
(10) See section J for NESHAP/MACT requirements

** Refer to section F and G of this permit to determine the monitoring, recordkeeping and reporting requirements for this device.

FACILITY PERMIT TO OPERATE
EXIDE TECHNOLOGIES

SECTION H: PERMIT TO CONSTRUCT AND TEMPORARY PERMIT TO OPERATE

The operator shall comply with the terms and conditions set forth below:

*(Note: additions and changes are shaded and indicated in **bold type**)*

FACILITY CONDITIONS

NEW
F67.1 The facility operator shall comply with all terms and conditions specified below.

Exide shall comply with all applicable mitigation measures stipulated in the Mitigation Monitoring and Reporting Plan which is part of the SCAQMD approved Mitigated Negative Declaration for this facility.

[CA PRC CEQA, 11-23-1970]

NEW
F67.2 The facility operator shall comply with all terms and conditions specified below.

Exide shall comply with all terms and conditions of the Final Revised Rule 1402 Risk Reduction Plan, upon approval, the Order for Abatement of Hearing Board Case No. 3151-29, and all terms, conditions and mitigation measures identified in the Revised Dust Mitigation Plan which is approved under the Order for Abatement issued under Hearing Board Case No. 3151-32.

[RULE 1402, 3-4-2005; RULE 1420.1, 3-7-2014]

DEVICE CONDITIONS

B. Material/Fuel Type Limits

NEW
B59.3 The operator shall not use the following material(s) in this device :

Arsenic metal and/or chemical additives containing arsenic compounds.

[RULE 1401, RULE 1402, RULE 1407, RULE 1420.1]

[Devices subject to this condition : D11, D13, D15, D17, D19, D24, D26, D28, D30, D32, D34, D36]

FACILITY PERMIT TO OPERATE
EXIDE TECHNOLOGIES

SECTION H: PERMIT TO CONSTRUCT AND TEMPORARY PERMIT TO OPERATE

The operator shall comply with the terms and conditions set forth below:

C. Throughput or Operating Parameter Limits

MODIFIED

C8.1 The operator shall use this equipment in such a manner that the temperature being monitored, as indicated below, is not less than 1400 Deg F.

A) For the purpose of this condition, the temperature gauge shall be located at a distance not less than 7'-10" (7 feet and 10 inches) downstream of the burner location in the afterburner combustion chamber.

B) For the purpose of this condition, the temperature gauge may be either a fixed installation, a mechanically retractable installation, and/or a manually retractable installation.

C) The operator shall also install and maintain a device to continuously record the parameter being measured.

D) The measuring device or gauge shall be accurate to within plus or minus 42 degrees Fahrenheit. It shall be calibrated once every 12 months.

E) During operation of the cupola furnace (including startup and shutdown), the temperature readings of the temperature gauge described in this condition shall be recorded continuously.

F) During cold startup of the cupola furnace, the temperature gauge shall indicate at least 1400 Degrees Fahrenheit prior to the initiation of carbon coke and/or furnace feed material charging in the cupola furnace.

G) During shutdown of the cupola furnace, the temperature gauge shall indicate at least 1400 Degrees Fahrenheit until all combustion activity in the cupola furnace has ceased. For the purpose of this condition, combustion activity is defined as burning or smoldering of carbon coke and/or any other organic material in the cupola furnace as evidenced by the presence of incandescent light and visible emissions.

H) This condition applies to requirements for afterburner operation. In addition to these requirements, the other parts of the air pollution control system serving the cupola furnace, including but not limited to, baghouses and scrubbers shall remain in full operation as long as there is the presence of any molten lead or molten slag inside of the cupola furnace.

FACILITY PERMIT TO OPERATE
EXIDE TECHNOLOGIES

SECTION H: PERMIT TO CONSTRUCT AND TEMPORARY PERMIT TO OPERATE

The operator shall comply with the terms and conditions set forth below:

I) During periods of breakdown or malfunction, the operator shall comply with the breakdown and notification requirements in Rule 430. In addition, when a breakdown or malfunction of this equipment results in an event which results in non-compliance with the temperature limit in this condition, the operator shall file a Title V deviation report in accordance with the provisions of Rule 3004.

[RULE 1303(a)(1)-BACT, 5-10-1996; RULE 1401, 12-7-1990; RULE 407, 4-2-1982]

[Devices subject to this condition : C44]

DELETED
C8.8

(Replaced by enhanced condition C8.1)

NEW
C8.9 The operator shall use this equipment in such a manner that the temperature being monitored, as indicated below, is not less than 1500 Deg F.

To comply with this condition, the operator shall install and maintain a(n) temperature gauge to accurately indicate the temperature in the regenerative thermal oxidizer (RTO), in degrees Fahrenheit.

Each temperature measuring device shall be equipped with a chart recorder to continuously monitor and record the temperature in the RTO.

Each temperature measuring device shall be accurate to within plus or minus 45 degrees Fahrenheit. Each device shall be calibrated once every 12 months.

[RULE 1303(a)(1)-BACT, RULE 1401, RULE 407]

[Devices subject to this condition: C199, C205]

FACILITY PERMIT TO OPERATE
EXIDE TECHNOLOGIES

SECTION H: PERMIT TO CONSTRUCT AND TEMPORARY PERMIT TO OPERATE

The operator shall comply with the terms and conditions set forth below:

NEW
C8.10 The operator shall use this equipment in such a manner that the flow rate being monitored, as indicated below, is not less than 800 gpm.

To comply with this condition, the operator shall install and maintain a(n) flow meter to accurately indicate the flow rate in the liquid supply lines to the venturi scrubber and the tray-type scrubber, in gallons per minute.

[RULE 1303(a)(1)-BACT]

[Devices subject to this condition : C202]

NEW
C8.11 The operator shall use this equipment in such a manner that the flow rate being monitored, as indicated below, is not less than 650 gpm.

To comply with this condition, the operator shall install and maintain a(n) flow meter to accurately indicate the flow rate in the liquid supply lines to the tray-type scrubber, in gallons per minute.

[RULE 1303(a)(1)-BACT]

[Devices subject to this condition : C203]

NEW
C8.12 The operator shall use this equipment in such a manner that the pH being monitored, as indicated below, is not less than 6.5 of the pH scale.

To comply with this condition, the operator shall install and maintain a(n) pH meter to accurately indicate the pH in the recirculation tank serving the scrubber.

[RULE 1303(a)(1)-BACT]

[Devices subject to this condition : C202, C203]

FACILITY PERMIT TO OPERATE
EXIDE TECHNOLOGIES

SECTION H: PERMIT TO CONSTRUCT AND TEMPORARY PERMIT TO OPERATE

The operator shall comply with the terms and conditions set forth below:

NEW
C8.13 The operator shall use this equipment in such a manner that the differential pressure being monitored, as indicated below, is not less than 35 inches water column.

To comply with this condition, the operator shall install and maintain a(n) differential pressure gauge to accurately indicate the differential pressure across the venturi scrubber and the tray-type scrubber, in total inches water column.

[RULE 1303(a)(1)-BACT, RULE 1401]

[Devices subject to this condition : C202, C203]

D. Monitoring/Testing Requirements

NEW
D12.20 The operator shall install and maintain a(n) differential pressure gauge to accurately indicate the differential pressure in the furnace, in inches water column.

A. The pressure differential gauge shall be installed, operated, and maintained pursuant to the requirements in condition E448.13.

B. The furnace shall be operated such that static differential furnace pressure, in inches of water column averaged over 30 minutes, is maintained at a value -0.02 or more negative, except as specified in condition E448.13.

[RULE 1420.1]

[Devices subject to this condition : D119 D128]

MODIFIED
D82.1 The operator shall install and maintain a CEMS to measure the following parameters:

NOx concentration in PPMv

SOx concentration in PPMv

FACILITY PERMIT TO OPERATE
EXIDE TECHNOLOGIES

SECTION H: PERMIT TO CONSTRUCT AND TEMPORARY PERMIT TO OPERATE

The operator shall comply with the terms and conditions set forth below:

CO concentration in ppmv

The CEMS will convert the actual NOx**, SOx** and CO concentrations to mass emission rates (lbs/hr) and record the hourly emission rates on a continuous basis.

The CEMS shall be installed and maintained to totalize the exhaust gas flow rate, in dry standard cubic feet.

The SOx emissions in the common cupola and reverb scrubber stack outlet shall be quantified based on a concentration limit for SOx and total exhaust gas flow rate measured by the NOx CEMS**, prior to the installation of the SOx CEMS.**

The SOx concentration limit shall be equal to **1.80** PPMv at actual stack conditions**, prior to the installation of the SOx CEMS**. Concentrations and exhaust gas flow rates **measured by the CEMS** shall be based on dry, standard conditions.

Exide shall submit an application and protocol to certify the SOx CEMS to measure SOx emissions, not later than 60 days following the issue date of this permit.

The concentration limits for the reverberatory and cupola furnaces shall not be used for emission reporting purposes subsequent to the certification of the SOx CEMS.

The source test report for the SOx CEMS certification shall be submitted to the SCAQMD not later than 180 days of initial startup of the new venturi scrubber, tray scrubber, and cupola thimble hood enclosure RTO of device nos. C202, C203 and C205, respectively.

Written results shall be submitted to the SCAQMD within 60 days after testing of the SOx CEMS is complete.

[RULE 2011; RULE 2012**; RULE 407**]

[Devices subject to this condition : S139]

FACILITY PERMIT TO OPERATE
EXIDE TECHNOLOGIES

SECTION H: PERMIT TO CONSTRUCT AND TEMPORARY PERMIT TO OPERATE

The operator shall comply with the terms and conditions set forth below:

DELETED
Condition D182.6

[RULE 1402, 3-4-2005]
[Devices subject to this condition : D128]

NEW
D182.11 The operator shall test this equipment in accordance with the following specifications:

A. This condition defines specific groups of compounds which shall be tested as stated in D182.x conditions, where applicable, contained in this Facility Permit. (For the purposes of this condition, x is the specific condition number.) Refer to each D182.x condition for specific requirements, where applicable.

B. The tests shall be performed to measure the emissions to the atmosphere at the air pollution control system (APCS) stack outlet of the following compounds while the process equipment is operated at maximum capacity and maximum potential to emit.

C. Tests shall include, but may not be limited to, a test for the following compounds in each air pollutant group:

Group 1: Rule 1407 and 1420.1 Toxic Metals:

Total Arsenic
Total Cadmium
Total Lead

Group 2: Additional Toxic Metals

Total Beryllium
Hexavalent Chromium
Total Cobalt
Total Copper
Total Manganese
Total Mercury
Total Nickel

FACILITY PERMIT TO OPERATE
EXIDE TECHNOLOGIES

SECTION H: PERMIT TO CONSTRUCT AND TEMPORARY PERMIT TO OPERATE

The operator shall comply with the terms and conditions set forth below:

Total Selenium
Total Vanadium

Group 3: Rule 1420.1 Toxic Organic Compounds

Benzene
1,3-Butadiene

Group 4: Additional Toxic Organic Compounds

Carbon Tetrachloride
Chlorobenzene
Chloroform
1,2-Dibromoethane
1,4-Dichlorobenzene
1,2-Dichloroethane
1,1-Dichloroethene
1,4-Dioxane
Ethylbenzene
Methylene Chloride
Styrene
1,1,2,2,-Tetrachloroethane
Tetrachloroethene
Toluene
1,1,2-Trichloroethane
Trichloroethene
Vinyl Chloride
o-Xylene
m,p-Xylenes
Polychlorinated Dibenzo-p-dioxins (PCDD's)
Polychlorinated Dibenzofurans (PCDF's)
Polychlorinated Biphenyls (PCB's)
Polynuclear Aromatic Hydrocarbons (PAH's)
Hydrogen Sulfide
Formaldehyde
Acetaldehyde

FACILITY PERMIT TO OPERATE
EXIDE TECHNOLOGIES

SECTION H: PERMIT TO CONSTRUCT AND TEMPORARY PERMIT TO OPERATE

The operator shall comply with the terms and conditions set forth below:

Group 5: RECLAIM Emissions

Oxides of Nitrogen
Oxides of Sulfur

Group 6: Criteria Emissions

Total non-methane hydrocarbons
Carbon Monoxide
Particulate Matter Less Than 10 microns (PM10)

[RULE 404, RULE 405, RULE 407, RULE 409, RULE 1401, RULE 1402, RULE 1407, RULE 1420, RULE 1420.1, RULE 2011, RULE 2012, RULE 1303(a)(1)-BACT, RULE 1303(b)(2)-Offset, 40CFR 60 Subpart L, 40CFR 63, Subpart X]

[Devices subject to this condition: S139, S140, S141, S142, S145, S158, S166, S187, S189]

NEW
D182.12 The operator shall test this equipment in accordance with the following specifications:

A) The test(s) shall be conducted and a written report submitted to the SCAQMD not later than 180 days of initial startup of the regenerative thermal oxidizers (RTO's).

B) Triplicate test(s) shall be performed to measure the emissions to the atmosphere of the compounds listed in air pollutant group numbers 1, 3, 5, and 6 defined in condition D182.11. In addition, the test(s) shall measure the inlet emission rates as required in condition D182.13, to determine if the RTO is performing as expected to meet Rule 1402 and BACT requirements.

C) Tests for NOx and SOx shall be performed pursuant to the protocol requirements in Rules 2012 and 2011, respectively.

D) A source testing plan shall be submitted to the SCAQMD for approval at least 60 days prior to testing. All tests shall be conducted in accordance with the plan as approved.

E) Written notice shall be provided to the SCAQMD at least 10 days prior to testing so that an SCAQMD observer may be present during the tests.

FACILITY PERMIT TO OPERATE
EXIDE TECHNOLOGIES

SECTION H: PERMIT TO CONSTRUCT AND TEMPORARY PERMIT TO OPERATE

The operator shall comply with the terms and conditions set forth below:

F) The source tests shall be performed by a qualified testing laboratory and conducted in accordance with SCAQMD approved procedures.

G) Sampling facilities shall comply with the SCAQMD "Guidelines For The Construction Of Sampling And Testing Facilities", pursuant to Rule 217.

H) Written results shall be submitted to the SCAQMD within 60 days after testing and shall include the items listed in condition E448.11.

[RULE 404, RULE 405, RULE 407, RULE 409, RULE 1401, RULE 1402, RULE 1407, RULE 1420, RULE 1420.1, RULE 2011, RULE 2012, RULE 1303(a)(1)-BACT, RULE 1303(b)(2)-Offset, 40CFR 63, Subpart X]

[Devices subject to this condition: S145, C199, C205]

NEW
D182.13 The operator shall test this equipment in accordance with the following specifications

A) Triplicate tests shall be performed to measure the emissions at the regenerative thermal oxidizer (RTO) inlets for RTO's installed on the outlet of the rotary dryer HEPA filter and the RTO venting the cupola furnace thimble hood enclosure.

B) The respective tests shall be performed while the rotary dryer furnace and reverberatory furnace are operated at maximum capacity in the case of the rotary dryer RTO and while the cupola furnace is operating at maximum capacity in the case of the cupola furnace thimble enclosure RTO.

C) The tests at the rotary dryer RTO inlet shall be performed simultaneously with the tests for these compounds at the rotary dryer RTO outlet.

D) The tests at the cupola thimble hood enclosure RTO inlet shall be performed simultaneously with the tests for these compounds at the common scrubber stack outlet serving the reverberatory and cupola furnace air pollution control systems.

E) The tests shall include, but may not be limited to, a test for:

FACILITY PERMIT TO OPERATE
EXIDE TECHNOLOGIES

SECTION H: PERMIT TO CONSTRUCT AND TEMPORARY PERMIT TO OPERATE

The operator shall comply with the terms and conditions set forth below:

1,3-Butadiene
Benzene
Total and non-methane hydrocarbons
Carbon Monoxide

[RULE 1401, 3-4-2005; RULE 1402, 3-4-2005]

[Devices subject to this condition: C199, C205]

NEW
D182.14 The operator shall test this equipment in accordance with the following specifications:

A) The test(s) shall be conducted and a written report submitted to the SCAQMD not later than 180 days of initial startup of the new venturi and tray scrubbers.

B) The source tests shall be performed ONLY after the smoke tests demonstrate complete smoke capture as stated in condition E448.12. Source tests performed without the required initial smoke tests shall be considered non-representative and shall be repeated.

C) Triplicate test(s) shall be performed to measure the emissions to the atmosphere of the compounds listed in air pollutant group numbers 1, 2, 3, 4, 5 and 6 defined in condition D182.11. The tests shall be performed at the outlets of the scrubbers of devices C43 and C203, each.

D) Test(s) shall also be performed to measure the inlet emission rates as required in condition D182.15, to determine if the air pollution control systems are performing as expected to meet Rule 1402, Rule 1407, RULE 1420 and BACT requirements.

E) Pursuant to the Risk Reduction Plan and Rule 1402, Exide is required to conduct source tests upon completion of the upgrades. If the above-referenced source tests are conducted at less than 85 percent of its current permitted charge rate limits for each furnace, within 30 days of approval of those source test results by the District, Exide shall submit a permit application to the District requesting a commensurate reduction in its permitted charge rate limits for the applicable furnaces to charge rates such that the source tested charge rates are equivalent to 85 percent of the proposed permitted charge rates.

FACILITY PERMIT TO OPERATE
EXIDE TECHNOLOGIES

SECTION H: PERMIT TO CONSTRUCT AND TEMPORARY PERMIT TO OPERATE

The operator shall comply with the terms and conditions set forth below:

F) For the purpose of condition E, the daily process weight limit for each furnace shall be calculated by multiplying the average process weight demonstrated during each set of the three test runs for each furnace, in pounds per hour each, by a factor of 24. The calculated average process weight shall be the average of the process weights in the three test runs. The daily limits calculated this way, in pounds per day, for each furnace, shall be divided by a factor of 2,000 and the limit set in the permit in units of tons per day, respectively, for each furnace.

G) Exide shall ensure that the instantaneous process weights for each furnace are recorded during each test run and the total amounts of process weight charged to each furnace is integrated for the duration of each and every test run.

H) If separate sets of triplicate test runs are required for the quantification of metals, and of any other compounds, the average throughput limits calculated pursuant to this condition shall be based on the test runs where arsenic emissions are measured.

I) Exide shall plan the availability of feed materials in advance prior to each set of source tests in order to ensure compliance with the requirements in this condition.

J) Elemental arsenic additions shall be performed in the pot furnaces vented by the baghouse of device C41 during at least one of the source test runs performed to quantify arsenic emissions.

K) Exide shall prepare and submit a detailed log of the elemental arsenic additions made to each of the lead refining furnaces vented to cupola baghouse 2 (Device C41) during each test run. This special log shall be included as part of the source test report submitted to the SCAQMD.

L) The special log of subpart K of this condition shall record the following information:

Calendar date
Test run number
Test run start and stop time
Pot furnace identification(s)
Chronological time
Pounds of elemental arsenic charged to each pot furnace

FACILITY PERMIT TO OPERATE
EXIDE TECHNOLOGIES

SECTION H: PERMIT TO CONSTRUCT AND TEMPORARY PERMIT TO OPERATE

The operator shall comply with the terms and conditions set forth below:

M) The source tests for metals shall be performed in accordance with ARB Method 436 - Determination of Multiple Metal Emissions from Stationary Sources.

N) Tests for NOx and SOx shall be performed pursuant to the protocol requirements in Rules 2012 and 2011, respectively.

O) Written notice shall be provided to the SCAQMD at least 7 days prior to testing so that an SCAQMD observer may be present during the tests.

P) Sampling facilities shall comply with the attached SCAQMD "guidelines for the construction of sampling and testing facilities", pursuant to rule 217.

Q) Exide shall ensure that there are enough personnel available during each test run to collect and report all of the required information as noted in conditions A through N. Written results shall be submitted to the SCAQMD within 60 days after testing is completed.

R) A source testing plan shall be submitted to the SCAQMD for approval at least 60 days prior to testing. All tests shall be conducted in accordance with the plan as approved.

S) Written notice shall be provided to the SCAQMD at least 10 days prior to testing so that an SCAQMD observer may be present during the tests.

T) The source tests shall be performed by a qualified testing laboratory and conducted in accordance with SCAQMD approved procedures.

U) Sampling facilities shall comply with the SCAQMD "Guidelines For The Construction Of Sampling And Testing Facilities", pursuant to Rule 217.

V) Written results shall be submitted to the SCAQMD within 60 days after testing and shall include the items listed in condition E448.11.

[RULE 404, RULE 405, RULE 407, RULE 409, RULE 1401, RULE 1402, RULE 1407, RULE 1420, RULE 1420.1, RULE 2011, RULE 2012, RULE 1303(a)(1)-BACT, RULE 1303(b)(2)-Offset, 40CFR 63, Subpart X]

[Devices subject to this condition: C40, C41, C42, C43, C45, D128, D132, D133, S139]

FACILITY PERMIT TO OPERATE
EXIDE TECHNOLOGIES

SECTION H: PERMIT TO CONSTRUCT AND TEMPORARY PERMIT TO OPERATE

The operator shall comply with the terms and conditions set forth below:

NEW
D182.15 The operator shall test this equipment in accordance with the following specifications

A. Triplicate tests shall be performed to measure the emissions listed in this condition at the inlets of cupola furnace baghouse no. 1 (device C45), cupola furnace baghouse no. 2 (device C41), and the reverberatory furnace baghouse (device C40).

B. The tests on the inlets of cupola baghouse nos. 1 and 2 (devices C41 and C45) shall be performed simultaneously with the tests for these compounds at the new tray scrubber outlet of device C203, prior to the junction with the common stack outlet of device S139.

C. The tests on the inlet of the reverberatory furnace baghouse (device C40) shall be performed simultaneously with the tests for these compounds at the existing tray scrubber outlet of device C43, prior to the junction with the common stack outlet of device S139.

D. Tests shall include, but may not be limited to, a test for:

Total arsenic
Total cadmium
Total lead

E. The tests shall demonstrate a minimum control efficiency of 99 percent, each, on both total arsenic and total cadmium emissions, pursuant to Rule 1407(d)(3).

F. At least three test runs for oxides of sulfur (SOx) shall be performed at the inlets to the two venturi scrubbers of devices C42 and C202.

G. The inlet tests for SOx on the inlet of device C42 shall be performed simultaneously with tests for SOx at the outlet of the tray-type scrubber of device C43.

H. The inlet tests for SOx on the inlet of device C202 shall be performed simultaneously with tests for SOx at the outlet of the tray-type scrubber of device C203.

FACILITY PERMIT TO OPERATE
EXIDE TECHNOLOGIES

SECTION H: PERMIT TO CONSTRUCT AND TEMPORARY PERMIT TO OPERATE

The operator shall comply with the terms and conditions set forth below:

I. The total number of test runs for SOx shall be determined pursuant to the source test protocol requirements in Rule 2011.

[RULE 1401, RULE 1402, RULE 1407, RULE 1420, RULE 2005, RULE 2011]

[Devices subject to this condition: C40, C41, C42, C43, C45, C202, C203]

MODIFIED
D323.1 The operator shall conduct an inspection for visible emissions from all stacks and other emission points of this equipment whenever there is a public complaint of visible emissions, whenever visible emissions are observed, and on a semi-annual basis, at least, unless the equipment did not operate during the entire semi-annual period. The routine semi-annual inspection shall be conducted while the equipment is in operation and during daylight hours.

If any visible emissions (not including condensed water vapor) are detected that last more than three minutes in any one hour, the operator shall verify and certify within 24 hours that the equipment causing the emission and any associated air pollution control equipment are operating normally according to their design and standard procedures and under the same conditions under which compliance was achieved in the past, and either:

1). Take corrective action(s) that eliminates the visible emissions within 24 hours and report the visible emissions as a potential deviation in accordance with the reporting requirements in Section K of this permit; or

2). Have a CARB-certified smoke reader determine compliance with the opacity standard, using EPA Method 9 or the procedures in the CARB manual "Visible Emission Evaluation", within three business days and report any deviations to AQMD. The operator shall keep the records in accordance with the recordkeeping requirements in Section K of this permit and the following records:

1). Stack or emission point identification;
2). Description of any corrective actions taken to abate visible emissions;
3). Date and time visible emission was abated; and
4). All visible emission observation records by operator or a certified smoke reader.

[RULE 3004(a)(4)-Periodic Monitoring, 8-11-1995]

[Devices subject to this condition : D1, D2, D7, D8, D9, D10, D11, D12, D13, D14,

FACILITY PERMIT TO OPERATE
EXIDE TECHNOLOGIES

SECTION H: PERMIT TO CONSTRUCT AND TEMPORARY PERMIT TO OPERATE

The operator shall comply with the terms and conditions set forth below:

D15, D16, D17, D18, D19, D20, D24, D25, D26, D27, D28, D29, D30, D31, D32, D33, D34, D35, D36, D37, C42, C43, C44, D58, D59, D60, D61, D62, D63, D64, D65, D66, D67, D68, D69, D74, D75, D76, D77, D78, D79, D80, D81, D82, D83, D84, D85, D86, D87, D88, D89, D90, D91, D92, D93, D94, D95, D96, D97, D109, D110, D111, D112, D113, D114, D115, D116, D117, D118, D119, D120, D121, D122, D123, D124, D125, D126, D127, D128, D129, D130, D131, D132, D133, D135, D136, D137, D138, S139, C143, D149, D151, D152, D153, D154, D155, C159, D161, C162, D164, C165, C172, D173, D183, C184, C186, C188, C196, **D197, D198, C199, C200, C201, C202, C203, C204, C205]**

E. Equipment Operation/Construction Requirements

NEW
E448.11 The operator shall comply with the following requirements:

A Rule 1402 facility-wide health risk assessment (HRA) shall be performed subject to the following conditions:

A) Upon approval of the source test report for the rotary dryer furnace air pollution control system, the two process venturi/tray scrubber systems at this facility, and the HEPA filter systems installed on the MAC baghouses, cupola feed room baghouse, and the soft and hard lead baghouses, detailed dispersion modeling and an HRA shall be performed based on the new emission rate data and based on instructions provided by the SCAQMD subsequent to approval of the source test report.

B) Within 60 days following the SCAQMD approval of the initial source test results, Exide shall submit a revised AB2588 HRA based on the approved source test results to determine the risk level (MICR and hazard indices) and the cancer burden.

C) Two copies of the HRA report shall be submitted to the SCAQMD (Attention: Energy/Public Services/Waste Management/Terminals Permitting.)

D) The HRA report prepared pursuant to this condition shall be used to demonstrate compliance with Rule 1402 requirements in conjunction with the Risk Reduction Plan submitted by Exide to the SCAQMD. The demonstrated risk shall not exceed the action risk levels as defined in Rule 1402 and the demonstration shall be completed within the timeline set forth in the rule.

FACILITY PERMIT TO OPERATE
EXIDE TECHNOLOGIES

SECTION H: PERMIT TO CONSTRUCT AND TEMPORARY PERMIT TO OPERATE

The operator shall comply with the terms and conditions set forth below:

[RULE 1402, 3-4-2005]

[Devices subject to this condition: S139, S140, S141, S142, S145, S158, S166, S187, S189]

NEW
E448.12 The operator shall comply with the following requirements:

A. **Smoke tests shall be performed on the cupola furnace slag tap hood and the cupola furnace thimble enclosure pursuant to the following requirements.**

B. **A smoke device capable of generating 8,000 cubic feet of smoke shall be used, or an equivalent smoke device as approved by the Executive Officer.**

C. **Smoke Test Procedure: Place a small open container or metal plate on a stable and flat area inside of the hood enclosure. Place the smoke device inside the container and/or on the plate. After lighting the smoke device, quickly close any access door(s) to avoid smoke from escaping. Let the smoke device completely burn. The entire space inside the enclosure will now be filled with the smoke. Observe for leaks of smoke from each seal, joint, and opening.**

D. **Using a video camera, record the observations of the smoke test and make a qualitative assessment of any leaks of smoke. The video recording shall include a time stamp identifying the calendar date and the chronological time of each smoke test.**

E. **Using the procedure in conditions C and D, perform a smoke test on the new cupola furnace thimble enclosure upon the initial cold start-up of the cupola furnace subsequent to the start of natural gas combustion in both the cupola furnace and afterburner, but prior to the initial coke, lead metal, and/or feed charge while the cupola furnace is warming up. Record video observations of the outside of the enclosure. Simultaneously, record video observations of the isolation door inside the enclosure with the existing isolation door video camera.**

F. **Using the procedure in conditions C and D, perform a smoke test on the new cupola furnace thimble enclosure while the cupola furnace is in full operation and charging is occurring. Record video observations of the outside of the enclosure. Simultaneously, record video observations of the isolation door inside the enclosure with the existing isolation door video camera.**

FACILITY PERMIT TO OPERATE
EXIDE TECHNOLOGIES

SECTION H: PERMIT TO CONSTRUCT AND TEMPORARY PERMIT TO OPERATE

The operator shall comply with the terms and conditions set forth below:

G. Using the procedure in conditions C and D, perform a smoke test on the new slag tapping hood enclosure while the cupola furnace is in full operation. The video records shall indicate that no smoke leaks occur at any point of the enclosure.

H. Using standard titanium tetrachloride smoke sticks, perform smoke tests of the two refining pot furnaces which will be used for arsenic additions. Record video of these events to demonstrate that no fugitive emissions escape capture by the pot furnace hoods.

I. Video files for both the internal and external smoke observations of the cupola furnace thimble hood enclosure, the cupola furnace slag tap smoke tests, and the refining pot furnace smoke tests shall be submitted to the SCAQMD (Attention: Energy/Public Services/Waste Management/Terminals Permitting).

J. The video files shall be submitted on compact disk or DVD in the avi or wmv Microsoft Windows video formats, or authored as standard NTSC MPEG2 DVD video disks.

K. The video files produced shall have calendar date and time stamps visible on each video frame.

L. The date and time stamps on the video files shall be synchronized with the network time associated with data acquisition of the processes at the Exide facility. The precision of the time synchronization for this purpose shall be accurate to within plus or minus 30 seconds.

M. The video records shall demonstrate that no smoke leaks occur from any point of the cupola thimble hood enclosure, the cupola furnace slag tapping port and the cupola charging cart tunnel opening.

[RULE 1401, RULE 1402, RULE 1407, RULE 1420, RULE 2005]

[Devices subject to this condition: D7, D9, D128, D132, D133]

FACILITY PERMIT TO OPERATE
EXIDE TECHNOLOGIES

SECTION H: PERMIT TO CONSTRUCT AND TEMPORARY PERMIT TO OPERATE

The operator shall comply with the terms and conditions set forth below:

NEW
E448.13 The operator shall comply with the following requirements:

The following requirements shall apply to monitoring of static pressure differential inside of smelting furnaces at this facility for compliance with Rule 1420.1.

A. The monitoring device shall be approved by the Executive Officer pursuant to Rule 1420.1 (f)(4).

B. The monitoring device shall:
- **a. Continuously measure the instantaneous static differential furnace pressure.**
- **b. Have a resolution of at least 0.01 inches water column.**
- **c. Have an increment of measurement of 0.01 inches water column.**
- **d. Have a range from -10 inches to +10 inches water column for the measuring device.**
- **e. Be equipped with ports to allow for periodic calibration in accordance with manufacturer's specifications.**
- **f. Be calibrated according to manufacturer's specifications at a frequency of not less than twice every calendar year.**
- **g. Be equipped with a continuous data acquisition system (DAS). The DAS shall record the data output from the monitoring device at a frequency of not less than once every sixty (60) seconds.**
- **h. Generate data files from the computer system interfaced with each DAS each calendar day. The data file shall be saved in electronic ASCII character format, Microsoft Excel (xls or xlsx) format, PDF format, or other format as approved by the Executive Officer. The file shall contain a table of chronological date and time and the corresponding data output value from the monitoring device in inches of water column. The operator shall prepare a separate data file each day showing the 30-minute average pressure readings recorded by this device each calendar day.**
- **i. Be maintained in accordance with manufacturer's specifications.**

C. A reverberatory furnace may be operated at an alternative static differential furnace pressure if the owner or operator can demonstrate that it can achieve emission reductions that are equivalent to or better than those achieved when operating at a pressure of -0.02 or more negative.
- **a. Demonstration shall be based on source test protocols and source tests conducted pursuant to the requirements of subdivision Rule 1420.1 (k) and approved by the Executive Officer.**

FACILITY PERMIT TO OPERATE
EXIDE TECHNOLOGIES

SECTION H: PERMIT TO CONSTRUCT AND TEMPORARY PERMIT TO OPERATE

The operator shall comply with the terms and conditions set forth below:

b. The alternative static differential furnace pressure shall not exceed 0.4 inches water column and must be approved by the Executive Officer in the Continuous Furnace Pressure Monitoring Plan of Rule 1420 (f)(4).

[RULE 1420.1]

[Devices subject to this condition : D119, D128]

NEW
E448.14 The operator shall comply with the following requirements:

The following requirements apply to the monitoring of air pollution control system (APCS) exhaust gas flow rates at this facility.

A. The nomenclature used to identify the individual air flow meters and/or pressure differential measuring devices is listed below and shall be used for monitoring, record keeping and reporting under this permit condition. Exhaust gas flow meters and/or pressure differential measuring devices shall be installed on the following exhaust duct locations associated with APCS No. 1 (serving the reverberatory furnace) and APCS No. 2 (serving the cupola furnace).

a. The exhaust duct directly connected to the pot furnaces of Device Nos. D7 and D9, prior to the connection of this duct with any other attached duct. This meter or device shall be identified as Measuring Device F7.

b. The exhaust duct directly connected to the slag tapping hood serving the cupola slag tapping port of Device D132, prior to the connection of this duct with any other attached duct. This meter or device shall be identified as Measuring Device F132.

c. The exhaust duct directly connected to the blower exhaust outlet of the RTO of Device C205, serving the cupola furnace thimble hoods, prior to the connection of this duct with any other attached duct. This meter or device shall be identified as Measuring Device F205.

d. The exhaust duct directly connected to the blower exhaust outlet of cupola furnace baghouse no. 1 of Device C45, serving the cupola furnace, prior to the connection of this duct with any other attached duct. This meter or device shall be identified as Measuring Device F45.

FACILITY PERMIT TO OPERATE
EXIDE TECHNOLOGIES

SECTION H: PERMIT TO CONSTRUCT AND TEMPORARY PERMIT TO OPERATE

The operator shall comply with the terms and conditions set forth below:

e. The exhaust duct directly connected to the blower exhaust outlet of cupola furnace baghouse no. 2 of Device C41, serving the cupola furnace, prior to the connection of this duct with any other attached duct. This meter or device shall be identified as Measuring Device F41.

f. The exhaust duct directly connected to the blower exhaust outlet of the reverberatory baghouse of Device C40, serving the reverberatory furnace, prior to the connection of this duct with any other attached duct. This meter or device shall be identified as Measuring Device F40.

g. The exhaust duct section directly connected to the manual damper located between the venturi scrubbers of Device C42 and the scrubber of Device C202. This flow meter shall be installed adjacent to the manual damper on the side closest to device C42, prior to the connection of this run of duct with any other attached duct. This meter shall be identified as meter F42MD. This meter shall also be capable of indicating the relative direction of gas flow. A positive gas flow shall be defined as a flow towards device C42.

h. The ducts referenced in a. through g. of this condition shall be inspected at least annually for material build-up or other conditions that may contribute to the obstruction of air flow in the ducts. Any such material build-up or condition found that may contribute to such air flow obstruction shall be removed or remedied such that proper air flows are achieved based on original system design.

B. The operator shall record the following data for the measuring devices designated in this condition as F7, F40, F41, F45, F42MD F132, and F205. This data shall include the following:

a. Date
b. Time
c. Meter Identification
d. Actual meter reading in displayed units
e. The conversion factor from displayed and/or recorded units to flow rate
f. Flow rate in actual cubic feet per minute (ACFM)
g. Initials of person taking each reading, unless automated data is taken

C. The data logging required by this condition shall either be recorded manually or shall be recorded using a digital data acquisition system.

FACILITY PERMIT TO OPERATE
EXIDE TECHNOLOGIES

SECTION H: PERMIT TO CONSTRUCT AND TEMPORARY PERMIT TO OPERATE

The operator shall comply with the terms and conditions set forth below:

D. If the data is recorded manually, it shall be recorded not less than once per hour. If the data is recorded automatically, it shall be recorded on a one minute interval sampling rate.

E. If automatic monitoring is used, the monitoring devices shall:

a. Continuously measure the instantaneous flow rate.

b. Be calibrated according to manufacturer's specifications at a frequency of not less than once every calendar year.

c. Be equipped with a continuous data acquisition system (DAS). The DAS shall record the data output from the monitoring device at a frequency of not less than once every sixty (60) seconds.

d. Generate data files from the computer system interfaced with each DAS each calendar day. The data file shall be saved in electronic ASCII character format, Microsoft Excel (xls or xlsx) format, PDF format, or other format as approved by the Executive Officer. The file shall contain a table of the data specified in this condition.

e. Be maintained in accordance with manufacturer's specifications.

F. For the purpose of this condition, Exide has the option of installing alternate parameter measuring devices including, but not limited to, pressure differential gauges and pressure transducers which measure and record a pressure reading which can be converted to a flow rate using appropriate conversion factors as indicated in subpart (B)(e) of this condition. The conversion factor shall be updated at least once every 12 calendar months.

[RULE 1401, RULE 1402, RULE 1407, RULE 1420, RULE 1420.1]

[Devices subject to this condition : D7, D9, C40, C41, C45, C42, D132, C205]

FACILITY PERMIT TO OPERATE
EXIDE TECHNOLOGIES

SECTION H: PERMIT TO CONSTRUCT AND TEMPORARY PERMIT TO OPERATE

The operator shall comply with the terms and conditions set forth below:

H. Applicable Rules

MODIFIED
H116.2 The operator shall be subject to the requirements stated in Rules 1407 and 1420 in order to comply with these rules whenever this equipment is in operation.

[RULE 1407, 7-8-1994; RULE 1420, 9-11-1992]

[Devices subject to this condition : D7, D9, D11, D13, D15, D17, D19, D24, D26, D28, D30, D32, D34, D36, C38, C39, C40, C41, C42, C43, C44, C45, C46, C47, C48, D115, D119, D128, C144, **C196, C200, C201, C202, C203, C204]**

K. Record Keeping/Reporting

MODIFIED
K67.7 The operator shall keep records, in a manner approved by the **SCAQMD**, for the following parameter(s) or item(s):

A daily operating log documenting venturi and tray scrubber liquid flow rates, in gallons per minute, and liquid pH, with liquid flow rate entries made at intervals not to exceed 1 hour, and liquid pH entries made at intervals not to exceed 4 hours.

A daily operating log documenting venturi and tray scrubber pressure differentials, in inches water column, with entries made at intervals not to exceed 1 hour.

[RULE 1303(a)(1)-BACT, 5-10-1996; RULE 1303(b)(2)-Offset, 5-10-1996; 40CFR 63 Subpart X, 6-23-2003]

[Devices subject to this condition : C42, C43, **C202, C203]**

FACILITY PERMIT TO OPERATE
EXIDE TECHNOLOGIES

SECTION H: PERMIT TO CONSTRUCT AND TEMPORARY PERMIT TO OPERATE

The operator shall comply with the terms and conditions set forth below:

NEW
K67.12 The operator shall keep records, in a manner approved by the SCAQMD, for the following parameter(s) or item(s):

Records from the regenerative thermal oxidizer temperature recording device(s).

The dates on which calibrations of the regenerative thermal oxidizer temperature recording device(s) are performed.

[RULE 1303(a)(1)-BACT]
[Devices subject to this condition: C199, C205]

NEW
K67.13 The operator shall keep records, in a manner approved by the SCAQMD, for the following parameter(s) or item(s):

The calendar dates on which calibrations of the triboelectric-type broken filter detector are performed.

A copy of the protocol from the manufacturer used to calibrate the triboelectric-type broken filter detector.

[RULE 1303(a)(1)-BACT, RULE 1407]
[Devices subject to this condition : C204]

P/C

COMPANY NAME AND ADDRESS

Exide Technologies ID 124838
2700 South Indiana Street
Vernon, CA 90058 mailing and equipment address

EQUIPMENT DESCRIPTION

CHANGES ARE IN INDICATED IN BOLD AND HIGHLIGHTED

APPLICATION NO. 558214 (Previous A/N 520478) APCS 13 MODIFICATION

Equipment	ID No.	Connected To	RECLAIM Source Type/ Monitoring Unit	Emissions* And Requirements	Conditions
Process 1: SECONDARY METALS, LEAD SMELTING PROCESS					
System 10: REVERB FURNACE FEED ROOM APCS					
BAGHOUSE, NO. 1, WITH 494 BAGS, EACH 5 INCHES DIAMETER X 12 FEET LONG, PTFE MEMBRANE, MAC, MODEL 144MCF494, WITH A 150 HP BLOWER AND A BROKEN BAG DETECTOR, PULSE JET CLEANED A/N: **558214**	C156	~~**D7 D9 D11 D13 D15 D17 D19 D24 D26 D28 D30 D32 D34 D36**~~ **B206** D109 D110 D111 D112 D113 D151 S158 C175 C182 C190 **C200**		**LEAD**: (10) [**40CFR 63 Subpart X, #01, 1-29-1999**]; **PM**: (9) [**RULE 404, 2-7-1986**]	C6.4, D12.6, D12.7, D12.10, D12.16, D381.1, E102.1, H116.1, H116.4
DUST COLLECTOR, HEPA, WITH 25 PRE-FILTERS, EACH 2 FT. W. X 2 FT. L. X 2 INCHES THICK, WITH, 25 HEPA FILTERS, EACH 2 FT. W. X 2 FT. L. X 1 FT. THICK **A/N: 558214**	**C200**	**C156 S158**		**LEAD: (10) [40CFR 63 Subpart X, #01, 1-29-1999]; PM: (9) [RULE 404, 2-7-1986]**	D12.19, D182.10, D323.1, E102.1, E448.1, H116.1, H116.2, K171.7

Equipment	ID No.	Connected To	RECLAIM Source Type/ Monitoring Unit	Emissions* And Requirements	Conditions
Process 1: SECONDARY METALS, LEAD SMELTING PROCESS					
BAGHOUSE, NO. 2, WITH 494 BAGS, EACH 5 INCHES DIAMETER X 12 FEET LONG, PTFE MEMBRANE, MAC, MODEL 144MCF494, WITH A 150 HP BLOWER AND A BROKEN BAG DETECTOR, PULSE JET CLEANED A/N: **558214**	C157	~~**D7 D9 D11 D13 D15 D17 D19 D24 D26 D28 D30 D32 D34 D36**~~ **B206** D109 D110 D111 D112 D113 D151 S158 C175 C182 C190 **C201**		**LEAD**: (10) [**40CFR 63 Subpart X, #01, 1-29-1999**]; **PM**: (9) [**RULE 404, 2-7-1986**]	C6.4, D12.6, D12.7, D12.10, D12.16, D381.1, E102.1, H116.1, H116.4
DUST COLLECTOR, HEPA, WITH 25 PRE-FILTERS, EACH 2 FT. W. X 2 FT. L. X 2 INCHES THICK, WITH, 25 HEPA FILTERS, EACH 2 FT. W. X 2 FT. L. X 1 FT. THICK **A/N: 558214**	**C201**	**C157 S158**		**LEAD: (10) [40CFR 63 Subpart X, #01, 1-29-1999]; PM: (9) [RULE 404, 2-7-1986]**	D12.19, D182.10, D323.1, E102.1, E448.1, H116.1, H116.2, K171.7
STACK, HEIGHT: 120 FT ; DIAMETER: 6 FT A/N: **558214**	S158	**C200, C201**			D182.5, D182.10 **D182.11 E448.11** D381.1, K171.7

APPLICATION NO. 559499 (Previous A/N 520501) ROTARY DRYER APCS

Equipment	ID No.	Connected To	RECLAIM Source Type/ Monitoring Unit	Emissions* And Requirements	Conditions
Process 1: SECONDARY METALS, LEAD SMELTING PROCESS					
System 2: FEED DRYING SYSTEM					
DRYER, ROTARY, NATURAL GAS, FEED DRYING, 8 MMBTU/HR A/N: **564346** *(see p. 24 for A/N 564346)*	D115	C143	NOX: PROCESS UNIT**; SOX: PROCESS UNIT**	**CO**: 2000 PPMV (5) [**RULE 407, 4-2-1982**]; **LEAD**: (10) [**40CFR 63 Subpart X, #01, 1-29-1999**]; **NOX**: 130 LBS/MMSCF NATURAL GAS (1) [**RULE 2012, 12-7-1995;** *RULE 2012, 4-9-1999*]; **PM**: (9) [**RULE 405, 2-7-1986**]; **PM**: 0.1 GRAINS/SCF (5) [**RULE 409, 8-7-1981**]; **SOX**: 0.005 LBS/TON MATERIAL (1) [**RULE 2011, 12-7-1995;** *RULE 2011, 4-9-1999*]	B295.1, C6.1, D12.8, D323.1, H116.2, K67.10
CONVEYOR, SCREW, DRYER DISCHARGE A/N: **564346** *(see p. 24 for A/N 564346)*	D116	C143		**LEAD**: (10) [**40CFR 63 Subpart X, #01, 1-29-1999**]; **PM**: (9) [**RULE 405, 2-7-1986**]	D323.1
CYCLONE, HEIGHT: 17 FT 7 IN; DIAMETER: 5 FT 10 IN A/N: **559499**	C143	D114 D115 D116 C144		**LEAD**: (10) [**40CFR 63 Subpart X, #01, 1-29-1999**]; **PM**: (9) [**RULE 405, 2-7-1986**]	D323.1
BAGHOUSE, ~~**WITH 100 H.P. BLOWER,**~~ WITH EXPANDED TEFLON MEMBRANE BAGS WITH TEFLON SUBSTRATES, 5881 SQ.FT.; 312 BAGS A/N: **559499**	C144	C143 C184		**LEAD**: (10) [**40CFR 63 Subpart X, #01, 1-29-1999**]; **PM**: (9) [**RULE 404, 2-7-1986**]	C6.2, D12.5, D12.6, D381.1, E102.1, E193.1, H116.1, H116.2, H116.4, K67.2
INJECTOR, SIDEWALL WATER SPRAY, WITH 2 FLAMEX F180 NOZZLES, WITH SPARK ARRESTOR CONTROLLER, FLAMEX FMZ4100GAB24, A BATTERY BACK-UP, 8 FUX 3001-E OPTICAL IR SPARK DETECTORS A/N: **559499**	B176				E448.6

Equipment	ID No.	Connected To	RECLAIM Source Type/ Monitoring Unit	Emissions* And Requirements	Conditions
Process 1: SECONDARY METALS, LEAD SMELTING PROCESS					
DUST COLLECTOR, HEPA, WITH 6 PRE-FILTERS EACH 2 FT W. X 2 FT L. X 2 INCHES THICK, WITH 6 HEPA FILTERS EACH 2 FT W. X 2 FT L. X 11.5 INCHES THICK A/N: 559499	C184	C144 **C199**		**LEAD**: (10) [**40CFR 63 Subpart X, #01, 1-29-1999**]; **PM**: (9) [**RULE 404, 2-7-1986**]	D12.18, D323.1, H116.3
OXIDIZER, REGENERATIVE, OXIDIZERS INC, MODEL OX-2CH-PP02, 8FT W.X14FT L. X14FT-6 IN.H, NATURAL GAS, WITH A MAXON 3 IN. BURNER AND A 10-H.P. COMBUSTION AIR BLOWER, 2.5 MMBTU/HR, WITH A 100-H.P. EXHAUST BLOWER **A/N: 559499**	**C199**	**C184 S145**	**NOX: PROCESS UNIT**; SOX: PROCESS UNIT****	**CO: 2000 PPMV (5) [RULE 407, 4-2-1982]; LEAD: (10) [40CFR 63 Subpart X, #01, 1-29-1999]; NOX: 30 PPMV (3) [RULE 2012, 5-6-2005]; PM: (9) [RULE 405, 2-7-1986]; PM: 0.1 GRAINS/SCF (5) [RULE 409, 8-7-1981]; SOX: 0.83 LBS/MMSCF NATURAL GAS (1) [RULE 2011, 5-6-2005]**	**C8.9** **D182.11** **D182.12** **D182.13** D323.1 K67.12 K171.6
STACK, HEIGHT: 120 FT ; DIAMETER: 3 FT A/N: 559499	S145	**C199**			D182.5, **D182.11** **D182.12** **D182.13** **E448.11** D381.1, K171.6

APPLICATION NO. 562498 (Previous A/N 374180) and APPLICATION NO. 562503(Previous A/N 374231)

Equipment	ID No. (APCS No. 2)	Connected To (APCS No. 1)	RECLAIM Source Type/ Monitoring Unit	Emissions* And Requirements	Conditions
Process 1: SECONDARY METALS, LEAD SMELTING PROCESS					
System 7: REVERBERATORY AND CUPOLA FURNACE APCS					
TOWER, QUENCH CHAMBER, WATER SPRAY TYPE, HEIGHT: 61 FT ; DIAMETER: 10 FT WITH **A/N: 562503**	D135	D119 D136		**LEAD**: (10) [**40CFR 63 Subpart X, #01, 1-29-1999**]; **PM**: (9) [**RULE 404, 2-7-1986**]	D323.1
FUGITIVE EMISSIONS, MISCELLANEOUS, QUENCH CHAMBER CLEANOUT DOOR	D149	C47		**LEAD**: (10) [**40CFR 63 Subpart X, #01, 1-29-1999**]; **PM**: (9) [**RULE 404, 2-7-1986**]	D323.1
HEAT EXCHANGER, REVERB FURNACE EXHAUST GAS, A-PIPE TYPE, 49 IN. OUTSIDE DIA., 130 FT. TOTAL LENGTH **A/N: 562503**	D136	D135 D137		**LEAD**: (10) [**40CFR 63 Subpart X, #01, 1-29-1999**]; **PM**: (9) [**RULE 404, 2-7-1986**]	D323.1
HEAT EXCHANGER, ,BALLOON TYPE FLUE COOLER, SECTION 1, REVERB FURNACE EXHAUST GAS, 66 IN. W., 48 FT. L., 9 FT. H. **A/N: 562503**	D137	D136 D138		**LEAD**: (10) [**40CFR 63 Subpart X, #01, 1-29-1999**]; **PM**: (9) [**RULE 404, 2-7-1986**]	D323.1
HEAT EXCHANGER, ,BALLOON-TYPE FLUE COOLER, SECTION 2, REVERB FURNACE EXHAUST GAS, 48 IN. W., 66 FT. L., 6 FT. H. **A/N: 562503**	D138	C40 ~~C41~~ D137		**LEAD**: (10) [**40CFR 63 Subpart X, #01, 1-29-1999**]; **PM**: (9) [**RULE 404, 2-7-1986**]	D323.1
AFTERBURNER, NATURAL GAS, WITH A 20 HP COMBUSTION AIR BLOWER, 10 MMBTU/HR **NATURAL GAS FIRED ~~AND A 250 HP EXHAUST BLOWER,~~ A/N: 562498**	C44	~~C45~~ **D128 D134**	NOX: MAJOR SOURCE** **SOX: MAJOR SOURCE****	**CO**: 2000 PPMV (5) [**RULE 407, 4-2-1982**]; **LEAD**: (10) [**40CFR 63 Subpart X, #01, 1-29-1999**]; **PM**: (9) [**RULE 404, 2-7-1986**]; **PM**: 0.1 GRAINS/SCF (5) [**RULE 409, 8-7-1981**]	C8.1, ~~C8.8,~~ D323.1, H116.2, K67.8
DUST COLLECTOR, RTO GAS INLET CONDITIONING, CARTRIDGE TYPE, MAC, MODEL MAC2FLO 4M2F64, WITH 64 CARTRIDGE FILTERS, EACH 2 FT.-6 IN L. X 2 FT.-4.4 IN. DIA., PULSE JET CLEANED. A/N 562498	**C204**	**D133 C205**		**LEAD**: (10) [**40CFR 63 Subpart X, #01, 1-29-1999**]; **PM**: (9) [**RULE 404, 2-7-1986**]	D12.1, D12.17, D323.1 D381.1, E102.1, E193.1, H116.2, H116.4, **K67.13**

Equipment	ID No.	Connected To	RECLAIM Source Type/ Monitoring Unit	Emissions* And Requirements	Conditions
Process 1: SECONDARY METALS, LEAD SMELTING PROCESS					
OXIDIZER, REGENERATIVE, OXIDIZERS INC, MODEL OX-2CH-PP02U,11FT W.X19FT-6IN L. X23FT-11 IN.H, NATURAL GAS, WITH A MAXON 4 IN. BURNER AND A 10-H.P. COMBUSTION AIR BLOWER, 4.6 MMBTU/HR, WITH A 200-H.P. BOOSTER BLOWER A/N: 562498	**C205**	**C204 C41C45 C174**	**NOX: MAJOR SOURCE** SOX: MAJOR SOURCE****	**CO: 2000 PPMV (5) [RULE 407, 4-2-1982]; LEAD: (10) [40CFR 63 Subpart X, #01, 1-29-1999]; PM: (9) [RULE 405, 2-7-1986]; PM: 0.1 GRAINS/SCF (5) [RULE 409, 8-7-1981]; SOX: 0.83 LBS/MMSCF NATURAL GAS (1) [RULE 2011, 5-6-2005]**	**C8.9** D323.1 **K67.12 D182.12 D182.13 E448.14**
TANK, CUPOLA JACKET COOLING, THERMOSIPHON **A/N: 562498**	D134	**C44** D183			
HEAT EXCHANGER, CUPOLA FURNACE EXHAUST GAS, A-PIPE TYPE, 49 IN. OUTSIDE DIA., 130 FT. TOTAL LENGTH **A/N: 562498**	D183	D134 D173		**LEAD**: (10) [**40CFR 63 Subpart X, #01, 1-29-1999**]; **PM**: (9) [**RULE 404, 2-7-1986**]	D323.1
HEAT EXCHANGER, U-TUBE COOLER, FIVE SECTION, WITH 2 HOPPERS, A TUBE BYPASS, A TUBE DAMPER VALVE, AND A HOPPER BY-PASS WITH A DAMPER **A/N: 562498**	D173	C174 D183		**LEAD**: (10) [**40CFR 63 Subpart X, #01, 1-29-1999**]; **PM**: (9) [**RULE 404, 2-7-1986**]	D323.1
CYCLONE, DIAMETER: 4 FT 9 IN **A/N: 562498**	C174	**D7 D9 C41** C45 D173		**LEAD**: (10) [**40CFR 63 Subpart X, #01, 1-29-1999**]; **PM**: (9) [**RULE 404, 2-7-1986**]	
BAGHOUSE, WITH EXPANDED TEFLON MEMBRANE BAGS WITH TEFLON SUBSTRATES, 21362 SQ.FT.; 510 BAGS, **WITH A 450-H.P. EXHAUST BLOWER A/N: 562503**	C40 C42	D138 **C202**		**LEAD**: (10) [**40CFR 63 Subpart X, #01, 1-29-1999**]; **PM**: (9) [**RULE 404, 2-7-1986**]	C6.3, D12.5, D12.6, D12.11, **D182.14 D182.15** D381.1, E102.1, E193.1, **E448.14** H116.1, H116.2, H116.4, K67.2

Equipment	ID No.	Connected To	RECLAIM Source Type/ Monitoring Unit	Emissions* And Requirements	Conditions
Process 1: SECONDARY METALS, LEAD SMELTING PROCESS					
BAGHOUSE, WITH EXPANDED TEFLON MEMBRANE BAGS WITH TEFLON SUBSTRATES, 21362 SQ.FT.; 510 BAGS, **WITH A 450-H.P. EXHAUST BLOWER A/N: 562498**	C41	**D7 D9** C42 **D132** ~~**D138**~~ ~~**D173**~~ C174 **C202**		**LEAD**: (10) [**40CFR 63 Subpart X, #01, 1-29-1999**]; **PM**: (9) [**RULE 404, 2-7-1986**]	C6.3, D12.5, D12.6, D12.11, **D182.14** **D182.15** D381.1, E102.1, E193.1, **E448.14** H116.1, H116.2, H116.4, K67.2
BAGHOUSE, WITH EXPANDED TEFLON MEMBRANE BAGS WITH TEFLON SUBSTRATES, 22620 SQ.FT., **WITH A 450-H.P. EXHAUST BLOWER A/N: 562498**	C45	**D7 D9** C42 ~~**C44**~~ **D173** C174 **C202**		**LEAD**: (10) [**40CFR 63 Subpart X, #01, 1-29-1999**]; **PM**: (9) [**RULE 404, 2-7-1986**]	C6.3, D12.5, D12.6, D12.11, **D182.14** **D182.15** D381.1, E102.1, E193.1, **E448.14** H116.1, H116.2, H116.4, K67.2
SCRUBBER, VENTURI, AIRPOL, MODEL 3970P, HEIGHT: 13 FT 9 IN; DIAMETER: 4 FT **A/N: 562503**	C42 C40 C41 C43 C45			**LEAD**: (10) [**40CFR 63 Subpart X, #01, 1-29-1999**]; **PM**: (9) [**RULE 404, 2-7-1986**]; **ROG**: (10) [**40CFR 63 Subpart X, #01, 1-29-1999**]	C8.2, C8.3, C8.5, C8.6, C8.7, **D182.14** **D182.15** D323.1, **E448.14** H116.2, K67.7
SCRUBBER, TRAY, **NEPTUNE AIRPOL, MODEL T-271, WITH 3 TRAYS,** ~~**WITH 450 HP BLOWER,**~~ HEIGHT: 30 FT 9 IN; DIAMETER: 8 FT 6 IN **A/N: 562503**	C43 C42 S139			**LEAD**: (10) [**40CFR 63 Subpart X, #01, 1-29-1999**]; **PM**: (9) [**RULE 404, 2-7-1986**]; **ROG**: (10) [**40CFR 63 Subpart X, #01, 1-29-1999**]	C8.2, C8.3, C8.5, C8.6, C8.7, **D182.14** **D182.15** D323.1, H116.2, K67.7

Equipment	ID No.	Connected To	RECLAIM Source Type/ Monitoring Unit	Emissions* And Requirements	Conditions
Process 1: SECONDARY METALS, LEAD SMELTING PROCESS					
SCRUBBER, VENTURI, AIRPOL, MODEL BASIC C-B VENTURI, HEIGHT: 17 FT; DIAMETER: 4 FT 9 IN. A/N: 562498	**C202**	**C40 C41 C45 C203**		**LEAD: (10) [40CFR 63 Subpart X, #01, 1-29-1999]; PM: (9) [RULE 404, 2-7-1986]; ROG: (10) [40CFR 63 Subpart X, #01, 1-29-1999]**	**C8.10, C8.12 C8.13 D182.15** D323.1, H116.2, K67.7
SCRUBBER, TRAY, AIRPOL, MODEL BASIC C-B VENTURI, WITH 4 TRAYS, HEIGHT: 35 FT 6 IN; DIAMETER: 11FT. A/N: 562498	**C203**	**S139 C202**		**LEAD: (10) [40CFR 63 Subpart X, #01, 1-29-1999]; PM: (9) [RULE 404, 2-7-1986]; ROG: (10) [40CFR 63 Subpart X, #01, 1-29-1999]**	**C8.11, C8.12 C8.13 D182.15** D323.1, H116.2, K67.7
STACK, COMMON TO REVERB AND CUPOLA, HEIGHT: 112 FT ; DIAMETER: **7 FT 6 IN, WITH AN EXHAUST OUTLET DIAMETER: 5 FT 5 IN. A/N: 562503**	S139	C43 **C203**		**LEAD**: 0.01 LBS/HR (6) [RULE 1420.1, 11-5-2010]	A63.1, D82.1, **D182.11 D182.14** D323.1, **E448.11** K67.9 K171.6

APPLICATION NO. 562499 Previous A/N 533208 (previous A/N 496421)

Equipment	ID No.	Connected To	RECLAIM Source Type/ Monitoring Unit	Emissions* And Requirements	Conditions
Process 1: SECONDARY METALS, LEAD SMELTING PROCESS					
System 5: LEAD METAL REFINING SYSTEM					
FURNACE, POT, NO. 4, NATURAL GAS, HARD LEAD, 2.5 MMBTU/HR **A/N: 562499**	D13	C38 C39 C46 ~~**C156**~~ ~~**C157**~~ **B206**	NOX: PROCESS UNIT**; SOX: PROCESS UNIT**	**CO**: 2000 PPMV (5) [**RULE 407, 4-2-1982**]; **LEAD**: (10) [**40CFR 63 Subpart X, #01, 1-29-1999**]; **NOX**: 0.017 LBS/LB MATERIAL (1) [**RULE 2012, 5-6-2005**]; **NOX**: 0.077 LBS/LB MATERIAL (1A) [**RULE 2012, 5-6-2005**]; **NOX**: 130 LBS/MMSCF NATURAL GAS (1) [**RULE 2012, 5-6-2005**]; **PM**: (9) [**RULE 405, 2-7-1986**]; **PM**: 0.1 GRAINS/SCF (5) [**RULE 409, 8-7-1981**]; **SOX**: 0.133 LBS/LB MATERIAL (1) [**RULE 2011, 5-6-2005**]; **SOX**: 0.83 LBS/MMSCF NATURAL GAS (1) [**RULE 2011, 5-6-2005**]	A63.2, **B59.3** B295.2, B295.3, D12.8, D323.1, E71.1, E448.7, H116.2

APPLICATION NO. 562500

RECLAIM/TITLE V SIGNIFICANT PERMIT REVISION

APPLICATION NO. 562501 Previous A/N 554906 LEAD SLAG PROCESSING SYSTEM

Equipment	ID No.	Connected To	RECLAIM Source Type/ Monitoring Unit	Emissions* And Requirements	Conditions
Process 1: SECONDARY METALS, LEAD SMELTING PROCESS					
System 4: LEAD SLAG PROCESSING SYSTEM)					
HOPPER, WEIGH, CUPOLA FURNACE FEED A/N: **562501**	D126	C48		**LEAD**: (10) [**40CFR 63 Subpart X, #01, 1-29-1999**]; **PM**: (9) [**RULE 405, 2-7-1986**]	D323.1
HOPPER, CUPOLA FURNACE FEED, EMERGENCY A/N: **562501**	D127			**LEAD**: (10) [**40CFR 63 Subpart X, #01, 1-29-1999**]; **PM**: (9) [**RULE 405, 2-7-1986**]	D323.1
FURNACE, CUPOLA, COKE, NATURAL GAS, LEAD SLAG AND LEAD ACID BATTERY SCRAP, **WITH A 1 MMBTU/HR PORTABLE NATURAL GAS PRE-HEATING BURNER.** A/N: **562501**	D128	C38 C39 C44	NOX: MAJOR SOURCE** **SOX: MAJOR SOURCE****	**CO**: 2000 PPMV (5) [**RULE 407, 4-2-1982**]; **LEAD**: (10) [**40CFR 63 Subpart X, #01, 1-29-1999**]; **PM**: (9) [**RULE 405, 2-7-1986**]; **PM**: 0.022 GRAINS/SCF (8A) [**40CFR 60 Subpart L, 12-3-1976**]; **PM**: 0.1 GRAINS/SCF (5) [**RULE 409, 8-7-1981**]; **SOX**: **1.80** PPMV (3) [**RULE 2011, 12-7-1995;** *RULE 2011, 4-9-1999*]	A63.2, B59.2, B163.2, C1.2, **D12.20** **D182.14** D323.1, **E448.12** **E448.13** H116.2, K67.5 D182.6 K171.6
TAPPING PORT, LEAD A/N: **562501**	D129	C38 C39 C46		**LEAD**: (10) [**40CFR 63 Subpart X, #01, 1-29-1999**]; **PM**: (9) [**RULE 405, 2-7-1986**]	D323.1
LAUNDER, LEAD, CUPOLA TAP A/N: **562501**	D130	C38 C39 C46		**LEAD**: (10) [**40CFR 63 Subpart X, #01, 1-29-1999**]; **PM**: (9) [**RULE 405, 2-7-1986**]	D323.1
LAUNDER, LEAD, CUPOLA TAP A/N: **562501**	D131	C38 C39 C46		**LEAD**: (10) [**40CFR 63 Subpart X, #01, 1-29-1999**]; **PM**: (9) [**RULE 405, 2-7-1986**]	D323.1
TAPPING PORT, LEAD SLAG A/N: **562501**	D132	C38 C39 **C41 ~~C46~~ C45 C174**		**LEAD**: (10) [**40CFR 63 Subpart X, #01, 1-29-1999**]; **PM**: (9) [**RULE 405, 2-7-1986**]	**D182.14** D323.1 **E448.12** **E448.14**
FUGITIVE EMISSIONS, MISCELLANEOUS, CUPOLA FURNACE THIMBLE, WITH AN AUTOMATIC FEED CHUTE COVER DOOR A/N: **562501**	D133	C38 C39 **~~C46~~ C204**		**LEAD**: (10) [**40CFR 63 Subpart X, #01, 1-29-1999**]; **PM**: (9) [**RULE 405, 2-7-1986**]	**D182.14** **E448.12** D323.1 E448.9

APPLICATION NO. 562502 Previous A/N 533206 (previous A/N 496438)

Equipment	ID No.	Connected To	RECLAIM Source Type/ Monitoring Unit	Emissions* And Requirements	Conditions
Process 1: SECONDARY METALS, LEAD SMELTING PROCESS					
System 5: LEAD METAL REFINING SYSTEM					
FURNACE, POT, NO. 2, NATURAL GAS, HARD LEAD, 2.5 MMBTU/HR **A/N: 562502**	D9 C38	C39 **C41 C45 ~~C46~~ ~~C156~~ ~~C157~~ B206 C174**	NOX: PROCESS UNIT**; SOX: PROCESS UNIT**	**CO**: 2000 PPMV (5) [**RULE 407, 4-2-1982**]; **LEAD**: (10) [**40CFR 63 Subpart X, #01, 1-29-1999**]; **NOX**: 0.017 LBS/LB MATERIAL (1) [**RULE 2012, 5-6-2005**]; **NOX**: 0.077 LBS/LB MATERIAL (1A) [**RULE 2012, 5-6-2005**]; **NOX**: 130 LBS/MMSCF NATURAL GAS (1) [**RULE 2012, 5-6-2005**]; **PM**: (9) [**RULE 405, 2-7-1986**]; **PM**: 0.1 GRAINS/SCF (5) [**RULE 409, 8-7-1981**]; **SOX**: 0.133 LBS/LB MATERIAL (1) [**RULE 2011, 5-6-2005**]; **SOX**: 0.83 LBS/MMSCF NATURAL GAS (1) [**RULE 2011, 5-6-2005**]	A63.2, B295.2, B295.3, D12.8, D323.1, E71.1, E448.7, **E448.12 E448.14** H116.2

APPLICATION NO. 562504 Previous A/N 533207 (previous A/N 496420)

Equipment	ID No.	Connected To	RECLAIM Source Type/ Monitoring Unit	Emissions* And Requirements	Conditions
Process 1: SECONDARY METALS, LEAD SMELTING PROCESS					
System 5: LEAD METAL REFINING SYSTEM					
FURNACE, POT, NO. 3, NATURAL GAS, HARD LEAD, 2.5 MMBTU/HR **A/N: 562504**	D11	C38 C39 C46 ~~**C156**~~ ~~**C157**~~ **B206**	NOX: PROCESS UNIT**; SOX: PROCESS UNIT**	**CO**: 2000 PPMV (5) [**RULE 407, 4-2-1982**]; **LEAD**: (10) [**40CFR 63 Subpart X, #01, 1-29-1999**]; **NOX**: 0.017 LBS/LB MATERIAL (1) [**RULE 2012, 5-6-2005**]; **NOX**: 0.077 LBS/LB MATERIAL (1A) [**RULE 2012, 5-6-2005**]; **NOX**: 130 LBS/MMSCF NATURAL GAS (1) [**RULE 2012, 5-6-2005**]; **PM**: (9) [**RULE 405, 2-7-1986**]; **PM**: 0.1 GRAINS/SCF (5) [**RULE 409, 8-7-1981**]; **SOX**: 0.133 LBS/LB MATERIAL (1) [**RULE 2011, 5-6-2005**]; **SOX**: 0.83 LBS/MMSCF NATURAL GAS (1) [**RULE 2011, 5-6-2005**]	A63.2, **B59.3,** B295.2, B295.3, D12.8, D323.1, E71.1, E448.7, H116.2

APPLICATION NO. 562505 Previous A/N 533209 (previous A/N 496423)

Equipment	ID No.	Connected To	RECLAIM Source Type/ Monitoring Unit	Emissions* And Requirements	Conditions
Process 1: SECONDARY METALS, LEAD SMELTING PROCESS					
System 5: LEAD METAL REFINING SYSTEM					
FURNACE, POT, NO. 5, NATURAL GAS, SPECIALTY LEAD, 2.5 MMBTU/HR **A/N: 562505**	D15	C38 C39 C46 ~~**C156**~~ ~~**C157**~~ **B206**	NOX: PROCESS UNIT**; SOX: PROCESS UNIT**	**CO**: 2000 PPMV (5) [**RULE 407, 4-2-1982**]; **LEAD**: (10) [**40CFR 63 Subpart X, #01, 1-29-1999**]; **NOX**: 0.017 LBS/LB MATERIAL (1) [**RULE 2012, 5-6-2005**]; **NOX**: 0.077 LBS/LB MATERIAL (1A) [**RULE 2012, 5-6-2005**]; **NOX**: 130 LBS/MMSCF NATURAL GAS (1) [**RULE 2012, 5-6-2005**]; **PM**: (9) [**RULE 405, 2-7-1986**]; **PM**: 0.1 GRAINS/SCF (5) [**RULE 409, 8-7-1981**]; **SOX**: 0.133 LBS/LB MATERIAL (1) [**RULE 2011, 5-6-2005**]; **SOX**: 0.83 LBS/MMSCF NATURAL GAS (1) [**RULE 2011, 5-6-2005**]	A63.2, **B59.3,** B295.2, B295.3, D12.8, D323.1, E71.1, E448.7, H116.2

APPLICATION NO. 562506 (Previous A/N 496426)

Equipment	ID No.	Connected To	RECLAIM Source Type/ Monitoring Unit	Emissions* And Requirements	Conditions
Process 1: SECONDARY METALS, LEAD SMELTING PROCESS					
System 5: LEAD METAL REFINING SYSTEM					
FURNACE, POT, NO. 6, NATURAL GAS, SOFT LEAD, 2.5 MMBTU/HR **A/N: 562506**	D24	C38 C39 C47 ~~**C156**~~ ~~**C157**~~ **B206**	NOX: PROCESS UNIT**; SOX: PROCESS UNIT**	**CO**: 2000 PPMV (5) [**RULE 407, 4-2-1982**]; **LEAD**: (10) [**40CFR 63 Subpart X, #01, 1-29-1999**]; **NOX**: 0.017 LBS/LB MATERIAL (1) [**RULE 2012, 12-7-1995;** *RULE 2012, 4-9-1999*]; **NOX**: 130 LBS/MMSCF NATURAL GAS (1) [**RULE 2012, 12-7-1995;** *RULE 2012, 4-9-1999*]; **PM**: (9) [**RULE 405, 2-7-1986**]; **PM**: 0.1 GRAINS/SCF (5) [**RULE 409, 8-7-1981**]; **SOX**: 0.133 LBS/LB MATERIAL (1) [**RULE 2011, 12-7-1995;** *RULE 2011, 4-9-1999*]; **SOX**: 0.83 LBS/MMSCF NATURAL GAS (1) [**RULE 2011, 12-7-1995;** *RULE 2011, 4-9-1999*]	A63.2, **B59.3,** B295.2, B295.3, D12.8, D323.1, E71.1, E448.7, H116.2

APPLICATION NO. 562507 Previous A/N 496428

Equipment	ID No.	Connected To	RECLAIM Source Type/ Monitoring Unit	Emissions* And Requirements	Conditions
Process 1: SECONDARY METALS, LEAD SMELTING PROCESS					
System 5: LEAD METAL REFINING SYSTEM					
FURNACE, POT, NO. 7, NATURAL GAS, SOFT LEAD, 2.5 MMBTU/HR **A/N: 562507**	D26	C38 C39 C47 ~~**C156**~~ ~~**C157**~~ **B206**	NOX: PROCESS UNIT**; SOX: PROCESS UNIT**	**CO**: 2000 PPMV (5) [**RULE 407, 4-2-1982**]; **LEAD**: (10) [**40CFR 63 Subpart X, #01, 1-29-1999**]; **NOX**: 0.017 LBS/LB MATERIAL (1) [**RULE 2012, 12-7-1995;** *RULE 2012, 4-9-1999*]; **NOX**: 130 LBS/MMSCF NATURAL GAS (1) [**RULE 2012, 12-7-1995;** *RULE 2012, 4-9-1999*]; **PM**: (9) [**RULE 405, 2-7-1986**]; **PM**: 0.1 GRAINS/SCF (5) [**RULE 409, 8-7-1981**]; **SOX**: 0.133 LBS/LB MATERIAL (1) [**RULE 2011, 12-7-1995;** *RULE 2011, 4-9-1999*]; **SOX**: 0.83 LBS/MMSCF NATURAL GAS (1) [**RULE 2011, 12-7-1995;** *RULE 2011, 4-9-1999*]	A63.2, **B59.3,** B295.2, B295.3, D12.8, D323.1, E71.1, E448.7, H116.2

APPLICATION NO. 562508 Previous A/N 496429

Equipment	ID No.	Connected To	RECLAIM Source Type/ Monitoring Unit	Emissions* And Requirements	Conditions
Process 1: SECONDARY METALS, LEAD SMELTING PROCESS					
System 5: LEAD METAL REFINING SYSTEM					
FURNACE, POT, NO. 8, NATURAL GAS, SOFT LEAD, 2.5 MMBTU/HR **A/N: 562508**	D28	C38 C39 C47 ~~**C156**~~ ~~**C157**~~ **B206**	NOX: PROCESS UNIT**; SOX: PROCESS UNIT**	**CO**: 2000 PPMV (5) [**RULE 407, 4-2-1982**]; **LEAD**: (10) [**40CFR 63 Subpart X, #01, 1-29-1999**]; **NOX**: 0.017 LBS/LB MATERIAL (1) [**RULE 2012, 12-7-1995;** *RULE 2012, 4-9-1999*]; **NOX**: 130 LBS/MMSCF NATURAL GAS (1) [**RULE 2012, 12-7-1995;** *RULE 2012, 4-9-1999*]; **PM**: (9) [**RULE 405, 2-7-1986**]; **PM**: 0.1 GRAINS/SCF (5) [**RULE 409, 8-7-1981**]; **SOX**: 0.133 LBS/LB MATERIAL (1) [**RULE 2011, 12-7-1995;** *RULE 2011, 4-9-1999*]; **SOX**: 0.83 LBS/MMSCF NATURAL GAS (1) [**RULE 2011, 12-7-1995;** *RULE 2011, 4-9-1999*]	A63.2, **B59.3,** B295.2, B295.3, D12.8, D323.1, E71.1, E448.7, H116.2

APPLICATION NO. 562509 Previous A/N 496432

Equipment	ID No.	Connected To	RECLAIM Source Type/ Monitoring Unit	Emissions* And Requirements	Conditions
Process 1: SECONDARY METALS, LEAD SMELTING PROCESS					
System 5: LEAD METAL REFINING SYSTEM					
FURNACE, POT, NO. 9, NATURAL GAS, SOFT LEAD, 2.5 MMBTU/HR **A/N: 562509**	D30	C38 C39 C47 ~~**C156**~~ ~~**C157**~~ **B206**	NOX: PROCESS UNIT**; SOX: PROCESS UNIT**	**CO**: 2000 PPMV (5) [**RULE 407, 4-2-1982**]; **LEAD**: (10) [**40CFR 63 Subpart X, #01, 1-29-1999**]; **NOX**: 0.017 LBS/LB MATERIAL (1) [**RULE 2012, 12-7-1995;** *RULE 2012, 4-9-1999*]; **NOX**: 130 LBS/MMSCF NATURAL GAS (1) [**RULE 2012, 12-7-1995;** *RULE 2012, 4-9-1999*]; **PM**: (9) [**RULE 405, 2-7-1986**]; **PM**: 0.1 GRAINS/SCF (5) [**RULE 409, 8-7-1981**]; **SOX**: 0.133 LBS/LB MATERIAL (1) [**RULE 2011, 12-7-1995;** *RULE 2011, 4-9-1999*]; **SOX**: 0.83 LBS/MMSCF NATURAL GAS (1) [**RULE 2011, 12-7-1995;** *RULE 2011, 4-9-1999*]	A63.2, **B59.3,** B295.2, B295.3, D12.8, D323.1, E71.1, E448.7, H116.2

APPLICATION NO. 562510 Previous A/N 533210 (previous A/N 496424)

Equipment	ID No.	Connected To	RECLAIM Source Type/ Monitoring Unit	Emissions* And Requirements	Conditions
Process 1: SECONDARY METALS, LEAD SMELTING PROCESS					
System 5: LEAD METAL REFINING SYSTEM					
FURNACE, POT, A, NATURAL GAS, HARD LEAD, 2.5 MMBTU/HR **A/N: 562510**	D17	C38 C39 C46 ~~**C156**~~ ~~**C157**~~ **B206**	NOX: PROCESS UNIT**; SOX: PROCESS UNIT**	**CO**: 2000 PPMV (5) [**RULE 407, 4-2-1982**]; **LEAD**: (10) [**40CFR 63 Subpart X, #01, 1-29-1999**]; **NOX**: 0.017 LBS/LB MATERIAL (1) [**RULE 2012, 5-6-2005**]; **NOX**: 0.077 LBS/LB MATERIAL (1A) [**RULE 2012, 5-6-2005**]; **NOX**: 130 LBS/MMSCF NATURAL GAS (1) [**RULE 2012, 5-6-2005**]; **PM**: (9) [**RULE 405, 2-7-1986**]; **PM**: 0.1 GRAINS/SCF (5) [**RULE 409, 8-7-1981**]; **SOX**: 0.133 LBS/LB MATERIAL (1) [**RULE 2011, 5-6-2005**]; **SOX**: 0.83 LBS/MMSCF NATURAL GAS (1) [**RULE 2011, 5-6-2005**]	A63.2, **B59.3,** B295.2, B295.3, D12.8, D323.1, E71.1, E448.7, H116.2

APPLICATION NO. 562511 Previous A/N 533211 (previous A/N 496425)

Equipment	ID No.	Connected To	RECLAIM Source Type/ Monitoring Unit	Emissions* And Requirements	Conditions
Process 1: SECONDARY METALS, LEAD SMELTING PROCESS					
System 5: LEAD METAL REFINING SYSTEM					
FURNACE, POT, B, NATURAL GAS, HARD LEAD, 2.5 MMBTU/HR **A/N: 562511**	D19	C38 C39 C46 ~~C156~~ ~~C157~~ **B206**	NOX: PROCESS UNIT**; SOX: PROCESS UNIT**	**CO**: 2000 PPMV (5) [**RULE 407, 4-2-1982**]; **LEAD**: (10) [**40CFR 63 Subpart X, #01, 1-29-1999**]; **NOX**: 0.017 LBS/LB MATERIAL (1) [**RULE 2012, 5-6-2005**]; **NOX**: 0.077 LBS/LB MATERIAL (1A) [**RULE 2012, 5-6-2005**]; **NOX**: 130 LBS/MMSCF NATURAL GAS (1) [**RULE 2012, 5-6-2005**]; **PM**: (9) [**RULE 405, 2-7-1986**]; **PM**: 0.1 GRAINS/SCF (5) [**RULE 409, 8-7-1981**]; **SOX**: 0.133 LBS/LB MATERIAL (1) [**RULE 2011, 5-6-2005**]; **SOX**: 0.83 LBS/MMSCF NATURAL GAS (1) [**RULE 2011, 5-6-2005**]	A63.2, **B59.3,** B295.2, B295.3, D12.8, D323.1, E71.1, E448.7, H116.2

APPLICATION NO. 562512 Previous A/N 533213 (previous A/N 496434)

Equipment	ID No.	Connected To	RECLAIM Source Type/ Monitoring Unit	Emissions* And Requirements	Conditions
Process 1: SECONDARY METALS, LEAD SMELTING PROCESS					
System 5: LEAD METAL REFINING SYSTEM					
FURNACE, POT, E, NATURAL GAS, SOFT LEAD, 2.5 MMBTU/HR **A/N: 562512**	D34	C38 C39 C47 ~~C156~~ ~~C157~~ **B206**	NOX: PROCESS UNIT**; SOX: PROCESS UNIT**	**CO**: 2000 PPMV (5) [**RULE 407, 4-2-1982**]; **LEAD**: (10) [**40CFR 63 Subpart X, #01, 1-29-1999**]; **NOX**: 0.017 LBS/LB MATERIAL (1) [**RULE 2012, 5-6-2005**]; **NOX**: 0.077 LBS/LB MATERIAL (1A) [**RULE 2012, 5-6-2005**]; **NOX**: 130 LBS/MMSCF NATURAL GAS (1) [**RULE 2012, 5-6-2005**]; **PM**: (9) [**RULE 405, 2-7-1986**]; **PM**: 0.1 GRAINS/SCF (5) [**RULE 409, 8-7-1981**]; **SOX**: 0.133 LBS/LB MATERIAL (1) [**RULE 2011, 5-6-2005**]; **SOX**: 0.83 LBS/MMSCF NATURAL GAS (1) [**RULE 2011, 5-6-2005**]	A63.2, **B59.3,** B295.2, B295.3, D12.8, D323.1, E71.1, E448.7, H116.2

APPLICATION NO. 562513 Previous A/N 533214 (previous A/N 496435)

Equipment	ID No.	Connected To	RECLAIM Source Type/ Monitoring Unit	Emissions* And Requirements	Conditions
Process 1: SECONDARY METALS, LEAD SMELTING PROCESS					
System 5: LEAD METAL REFINING SYSTEM					
FURNACE, POT, F, NATURAL GAS, SOFT LEAD, 2.5 MMBTU/HR **A/N: 562513**	D36 C38 C39	C47 ~~C156~~ ~~C157~~ **B206**	NOX: PROCESS UNIT**; SOX: PROCESS UNIT**	**CO**: 2000 PPMV (5) [**RULE 407, 4-2-1982**]; **LEAD**: (10) [**40CFR 63 Subpart X, #01, 1-29-1999**]; **NOX**: 0.017 LBS/LB MATERIAL (1) [**RULE 2012, 5-6-2005**]; **NOX**: 0.077 LBS/LB MATERIAL (1A) [**RULE 2012, 5-6-2005**]; **NOX**: 130 LBS/MMSCF NATURAL GAS (1) [**RULE 2012, 5-6-2005**]; **PM**: (9) [**RULE 405, 2-7-1986**]; **PM**: 0.1 GRAINS/SCF (5) [**RULE 409, 8-7-1981**]; **SOX**: 0.133 LBS/LB MATERIAL (1) [**RULE 2011, 5-6-2005**]; **SOX**: 0.83 LBS/MMSCF NATURAL GAS (1) [**RULE 2011, 5-6-2005**]	A63.2, **B59.3,** B295.2, B295.3, D12.8, D323.1, E71.1, E448.7, H116.2
MANIFOLD, POT FURNACE BURNER EXHAUST, BASEMENT BURNER ROOM, WITH A 15-H.P. EXHAUST BLOWER	**B206**	**D7 D9 D11 D13 D15 D17 D19 D24 D26 D28 D30 D32 D34 D36 C156 C157**			

APPLICATION NO. 562514 Previous A/N 533215 (previous A/N 496433)

Equipment	ID No.	Connected To	RECLAIM Source Type/ Monitoring Unit	Emissions* And Requirements	Conditions
Process 1: SECONDARY METALS, LEAD SMELTING PROCESS					
System 5: LEAD METAL REFINING SYSTEM					
FURNACE, POT, G, NATURAL GAS, SOFT LEAD, 2.5 MMBTU/HR **A/N: 562514**	D32	C38 C39 C47 ~~**C156**~~ ~~**C157**~~ **B206**	NOX: PROCESS UNIT**; SOX: PROCESS UNIT**	**CO**: 2000 PPMV (5) [**RULE 407, 4-2-1982**]; **LEAD**: (10) [**40CFR 63 Subpart X, #01, 1-29-1999**]; **NOX**: 0.017 LBS/LB MATERIAL (1) [**RULE 2012, 5-6-2005**]; **NOX**: 0.077 LBS/LB MATERIAL (1A) [**RULE 2012, 5-6-2005**]; **NOX**: 130 LBS/MMSCF NATURAL GAS (1) [**RULE 2012, 5-6-2005**]; **PM**: (9) [**RULE 405, 2-7-1986**]; **PM**: 0.1 GRAINS/SCF (5) [**RULE 409, 8-7-1981**]; **SOX**: 0.133 LBS/LB MATERIAL (1) [**RULE 2011, 5-6-2005**]; **SOX**: 0.83 LBS/MMSCF NATURAL GAS (1) [**RULE 2011, 5-6-2005**]	A63.2, **B59.3,** B295.2, B295.3, D12.8, D323.1, E71.1, E448.7, H116.2

APPLICATION NO. 562515 Previous A/N 533205 (previous A/N 496437)

Equipment	ID No.	Connected To	RECLAIM Source Type/ Monitoring Unit	Emissions* And Requirements	Conditions
Process 1: SECONDARY METALS, LEAD SMELTING PROCESS					
System 5: LEAD METAL REFINING SYSTEM					
FURNACE, POT, NO. 1, NATURAL GAS, HARD LEAD, 2.5 MMBTU/HR **A/N: 562515**	D7 C38 C39	**C41 C45 ~~C46~~ ~~C156~~ ~~C157~~ B206 C174**	NOX: PROCESS UNIT**; SOX: PROCESS UNIT**	**CO**: 2000 PPMV (5) [**RULE 407, 4-2-1982**]; **LEAD**: (10) [**40CFR 63 Subpart X, #01, 1-29-1999**]; **NOX**: 0.017 LBS/LB MATERIAL (1) [**RULE 2012, 5-6-2005**]; **NOX**: 0.077 LBS/LB MATERIAL (1A) [**RULE 2012, 5-6-2005**]; **NOX**: 130 LBS/MMSCF NATURAL GAS (1) [**RULE 2012, 5-6-2005**]; **PM**: (9) [**RULE 405, 2-7-1986**]; **PM**: 0.1 GRAINS/SCF (5) [**RULE 409, 8-7-1981**]; **SOX**: 0.133 LBS/LB MATERIAL (1) [**RULE 2011, 5-6-2005**]; **SOX**: 0.83 LBS/MMSCF NATURAL GAS (1) [**RULE 2011, 5-6-2005**]	A63.2, B295.2, B295.3, D12.8, D323.1, E71.1, E448.7, **E448.12 E448.14** H116.2

APPLICATION NO. 564346 (Previous A/N 559500)

Equipment	ID No.	Connected To	RECLAIM Source Type/ Monitoring Unit	Emissions* And Requirements	Conditions
Process 1: SECONDARY METALS, LEAD SMELTING PROCESS					
System 3: LEAD SMELTING SYSTEM					
CONVEYOR, SCREW, FEED **A/N: 564346**	D197	C38 C39 C47		**LEAD**: (10) [**40CFR 63 Subpart X, #01, 1-29-1999**]; **PM**: (9) [**RULE 404, 2-7-1986**]	D323.1
CONVEYOR, SCREW, FEED **A/N: 564346**	**D198**	**C38 C39 C47**		**LEAD**: (10) [**40CFR 63 Subpart X, #01, 1-29-1999**]; **PM**: (9) [**RULE 404, 2-7-1986**]	D323.1
FURNACE, REVERBATORY, NATURAL GAS, LEAD ACID BATTERY SCRAP, 30 MMBTU/HR **A/N: 564346**	D119	C38 C39 D135	NOX: MAJOR SOURCE** **SOX: MAJOR SOURCE****	**CO**: 2000 PPMV (5) [**RULE 407, 4-2-1982**]; **LEAD**: (10) [**40CFR 63 Subpart X, #01, 1-29-1999**]; **PM**: (9) [**RULE 405, 2-7-1986**]; **PM**: 0.022 GRAINS/SCF (8A) [**40CFR 60 Subpart L, 12-3-1976**]; **PM**: 0.1 GRAINS/SCF (5) [**RULE 409, 8-7-1981**]; **SOX**: **1.80** PPMV (3) [**RULE 2011, 12-7-1995;** *RULE 2011, 4-9-1999*]	A63.2, B59.1, B163.1, C1.3, C1.4, C303.1, D12.2, D12.3, D12.4, D12.8, **D12.20** D323.1, **E448.13** H116.2, K67.11
TAPPING PORT, LEAD **A/N: 564346**	D120	C38 C39 C47		**LEAD**: (10) [**40CFR 63 Subpart X, #01, 1-29-1999**]; **PM**: (9) [**RULE 405, 2-7-1986**]	D323.1
LAUNDER, LEAD, REVERB TAP **A/N: 564346**	D121	C38 C39 C47		**LEAD**: (10) [**40CFR 63 Subpart X, #01, 1-29-1999**]; **PM**: (9) [**RULE 405, 2-7-1986**]	D323.1
LAUNDER, LEAD, REVERB TAP **A/N: 564346**	D122	C38 C39 C47		**LEAD**: (10) [**40CFR 63 Subpart X, #01, 1-29-1999**]; **PM**: (9) [**RULE 405, 2-7-1986**]	D323.1
LAUNDER, LEAD, REVERB TAP **A/N: 564346**	D123	C38 C39 C47		**LEAD**: (10) [**40CFR 63 Subpart X, #01, 1-29-1999**]; **PM**: (9) [**RULE 405, 2-7-1986**]	D323.1
TAPPING PORT, LEAD SLAG **A/N: 564346**	D124	C38 C39 C47		**LEAD**: (10) [**40CFR 63 Subpart X, #01, 1-29-1999**]; **PM**: (9) [**RULE 405, 2-7-1986**]	D323.1
FUGITIVE EMISSIONS, MISCELLANEOUS, SLAG HANDLING SYSTEM **A/N: 564346**	D125	C38 C39 C47		**LEAD**: (10) [**40CFR 63 Subpart X, #01, 1-29-1999**]; **PM**: (9) [**RULE 405, 2-7-1986**]	D323.1

APPLICATION NO. 564348 (Previous A/N 558213)

Equipment	ID No.	Connected To	RECLAIM Source Type/ Monitoring Unit	Emissions* And Requirements	Conditions
Process 1: SECONDARY METALS, LEAD SMELTING PROCESS					
System 8: CUPOLA AND HARD LEAD REFINERY FURNACES APCS					
BAGHOUSE, WITH 450 HP BLOWER, 64000 SQ.FT. **A/N: 564348**	C46	~~**D7**~~ D8 ~~**D9**~~ D10 D11 D12 D13 D14 D15 D16 D17 D18 D19 D20 D129 D130 D131 ~~**D132**~~ D133 C177 C196		**LEAD**: (10) [**40CFR 63 Subpart X, #01, 1-29-1999**]; **PM**: (9) [**RULE 404, 2-7-1986**]	D12.6, D12.7, D12.10, D12.11, D182.10, D381.1, E102.1, E193.1, H116.1, H116.2, H116.4, K67.3, K171.7
DUST COLLECTOR, HEPA, 8 SECTIONS, WITH 72 PRE-FILTERS TOTAL, EACH 2 FT. W. X 2 FT. L. X 2 INCHES THICK, WITH, 72 HEPA FILTERS TOTAL, EACH 2 FT. W. X 2 FT. L. X 1 FT. THICK **A/N: 564348**	C196	C46 S140		**LEAD**: (10) [**40CFR 63 Subpart X, #01, 1-29-1999**]; **PM**: (9) [**RULE 404, 2-7-1986**]	D12.19, D182.10, D323.1, E102.1, E448.1, H116.1, H116.2, K171.7
STACK, HEIGHT: 112 FT ; DIAMETER: 6 FT 11 IN **A/N: 564348**	S140 C196				D182.10, **D182.11** D381.1 **E448.11** K171.7

HISTORY

The following table describes the status and description of the submitted applications:

The tables below and on the following pages summarize the recent permit history regarding the subject equipment (note: individual P/O numbers listed below are only for internal administrative purposes since this is a Title V facility):

AIR POLLUTION CONTROL SYSTEM NO. 13: (device nos. C156, C157, S158)	
558214	**Received 11-14-2013 for the installation of HEPA filter dust collectors on the outlets of each reverb furnace feed room baghouse (new devices C200 and C201).**
520478	Received 3/30/2011 to increase stack height of "MAC" baghouse, correct permit description, and replace bags with PTFE membrane type bags. P/C issued 6-24-2011.
500784	Received 7/16/2009 to add one additional overhead hood in RMPS building. P/O G14038 issued 6-30-2011.
496416	Received 3/13/2009 for alteration to 374248 - add venting of 14 pot burner exhausts and one overhead hood in South corridor building. Cancelled after P/O was issued for A/N 520478.
374248	Exide change of ownership (C/O) application received 8/31/2000 - P/C pending.
344815	P/C issued 1/27/1999 to GNB for new APCS No. 13.

ROTARY DRYER AIR POLLUTION CONTROL SYSTEM	
559499	**Received 1-9-2014 for an alteration to this system by the addition of a regenerative thermal oxidizer (RTO) (device C199) on the outlet of the HEPA filter dust collector in this system.**
520501	Received 3/30/2011 to increase stack height of rotary dryer baghouse. P/C issued 6-24-2011.
516866	Received 12/3/2010 pursuant to Rule 1420.1 to install a HEPA filter on the outlet of the rotary dryer baghouse. Proposed P/C under 45 day EPA review as of 3/31/2011. Superseded by A/N 520501.
500786	Received 7/16/2009 to install a new spark arrestor in the rotary dryer furnace baghouse inlet. It is required by the O/A issued under case no. 3151-21. P/C issued 3-30-2010. P/O G14039 issued 6-30-2011 (for database update purposes only).
374221	Received 9/14/2000 for C/O by Exide for rotary dryer APCS consisting of cyclone C143 and baghouse C144. P/O F36706 issued 1/15/2001.
272981	Received 9/16/1992 -- P/C issued to GNB on 10/6/1992, P/O F10946 issued to GNB on 12/19/1997.

AIR POLLUTION CONTROL SYSTEM NO. 2	
562498	**Received 4-10-2014 for a modification of this APCS by the addition of a new venturi (device C202) and tray-type (device C203) scrubber, with larger air flow capacity, and by the re-purposing of the baghouse of device C41 (formerly reverb baghouse no. 2) to serve as a second baghouse mainly for the control of emissions from the cupola furnace slag tapping port (device D132) enlarged hood and from the pot furnaces of devices D7 and D9. It will also provide some additional air flow capacity to the equipment in APCS 2, in general. The two cupola furnace baghouses (C45 and C41) will have combined exhaust gas streams connected to the new venturi scrubber (C202) and the existing venturi scrubber (C42).**
374180	received 8/31/2000 for change of ownership/alteration to APCS No. 2
374224	received 9-14-2000, P/O F36713 1-25-2001
362494	received 11-30-1999, cancelled 3-20-2002
304592	received 5-30-1995, P/O D92485 issued 8-1-1995 GNB
293851	received 6-6-1994, P/O D90352 issued 5-1-1995 GNB

FURNACE 4 (device no. D13)	
562499	**Received 4-10-2014 for change of condition to prohibit the charging of arsenic metal to this furnace.**
533208	Received 3-7-2012 for change of conditions to change NOx factor for $NaNO_3$ reagent.
496421	Received 3/13/2009 for alteration to 374211 by the venting of the burner exhaust to dust collector of 496416. P/C issued 6/24/2009. P/O G14024 issued (in database) on 6/30/2011. Official TV Facility Permit issued (Section D) on 7-28-2011.
374211	P/O F36576 issued 1/24/2001
178392	P/O D22934 issued 4/11/1990

CUPOLA FURNACE (DEVICE D128) PERMIT UNIT	
562501	**Received 4-10-2014 for an alteration to this furnace by the venting of this furnace to the modified APCS 2 of A/N 562498.**
554906	Received 8-7-2013. This application is for change of condition to source test condition no. D182.6 by a change in the due date for the final source test report to October 4, 2013.
548251	Received 3-12-2013. This application submitted to install a cover on top of the feed chute which is part of the cupola furnace thimble. This alteration is proposed as one step to reduce arsenic emissions collected by the Hard Lead Baghouse which vents fugitive emissions from the thimble area on top of the cupola furnace. P/C issued 3-28-2013.
374225	Received 8-31-2000 for change of ownership between GNB ID 44551 and Exide ID 124838. P/O F36697 issued 1-25-2001 in Title V Facility Permit. The P/O number is for internal administrative purposes only since this facility is currently a RECLAIM/Title V facility.
307425	Received 9-15-1995 following the end of the stipulated Order For Abatement (O/A) issued under Case No. 3151-3. P/O F10947 issued 12-19-1997.

CUPOLA FURNACE (DEVICE D128) PERMIT UNIT	
261786	Received 1-31-1992, Denied 5-8-1992. GNB filed A/N's 261786-8 to cover unpermitted alterations to the reverberatory and cupola furnaces, and the reverb dryer baghouse. Denial based on expected violations attributed to unpermitted addition of oxygen enrichment (excess NOx emissions), Rule 401 visible emissions, and Reg XIII violations. GNB entered into the stipulated Order for Abatement (O/A) of Case No. 3151-3 on 7-8-1992 in order to continue operation of this facility following the denial of the permanent equipment modifications which, in part, resulted in the denial of the equipment permit applications serving as temporary operating permits.
127247	Received 11-14-1984, P/O M56003 issued 4-9-1987
123778	Received 6-25-1984, P/O M34465 issued 8-29-1984 to GNB, ID 44551
C33321	Received 7-14-1980, P/O M38605 issued to Gould Inc., Metals Div. 6-8-1984, ID 7568

FURNACE 2 (device no. D9)	
562502	**Received 4-10-2014 for an alteration of pot furnace no. 2 (device D 9) by the re-routing of the ventilation of this furnace from the hard lead baghouse (device C46) to the modified APCS 2 of A/N 562498. This pot furnace will be used in conjunction with arsenic metal additions.**
533206	Received 3-7-2012 for change of conditions to change NOx factor for $NaNO_3$ reagent.
496438	Received 3/13/2009 for alteration to 374208 by the venting of the burner exhaust to dust collector of 496416. P/C issued 6/24/2009. P/O G14036 issued (in database) on 6/30/2011. Official TV Facility Permit issued (Section D) on 7-28-2011.
374208	P/O F36584 issued 1/24/2001 for C/O
178390	P/O D34308 issued 11/29/1990

AIR POLLUTION CONTROL SYSTEM NO. 1	
562503	**Received 4-10-2014 for an alteration to APCS 1 venting the reverberatory furnace by the removal of the physical connections of reverb baghouse no. 2 (device C41) and re-purposing this baghouse to APCS 2 serving the cupola furnace slag tapping hood and the two pot furnaces of devices D7 and D9. These two pot furnaces will be used in conjunction with arsenic metal additions.**
374231	Received 9-14-2000, P/O F36714 issued 1-25-2001
328455	Received 5-23-1997, P/O F10948 issued 12-19-1997
275775	Received 12-21-1992, P/O D67392 issued 12-23-1992
178893	Received 11-21-1988, P/O D36340 issued 2-21-1991
159460	Received 8-4-1987, P/O M61227 issued 3-20-1988
127246	Received 11-14-1984, P/O M56002 issued 4-9-1987
123777	Received 6-25-1984, P/O M40002 issued 8-29-1984

FURNACE 3 (device no. D11)	
562504	**Received 4-10-2014 for change of condition to prohibit the charging of arsenic metal to this furnace.**
533207	Received 3-7-2012 for change of conditions to change NOx factor for $NaNO_3$ reagent.
496420	Received 3/13/2009 for alteration to 374210 by the venting of the burner exhaust to dust collector of 496416. P/C issued 6/24/2009. P/O G14023 issued (in database) on 6/30/2011. Official TV Facility Permit issued (Section D) on 7-28-2011.
374210	P/O F36577 issued 1/24/2001 for C/O
178391	P/O D23196 issued 4/18/1990

FURNACE 5 (device no. D15)	
562505	**Received 4-10-2014 for change of condition to prohibit the charging of arsenic metal to this furnace.**
533209	Received 3-7-2012 for change of conditions to change NOx factor for $NaNO_3$ reagent.
496423	Received 3/13/2009 for alteration to 374212 by the venting of the burner exhaust to dust collector of 496416. P/C issued 6/24/2009. P/O G14025 issued (in database) on 6/30/2011. Official TV Facility Permit issued (Section D) on 7-28-2011.
374212	P/O F36575 issued 1/24/2001 for C/O
178393	P/O D22931 issued 4/11/1990

FURNACE 6 (device no. D24)	
562506	**Received 4-10-2014 for change of condition to prohibit the charging of arsenic metal to this furnace.**
496426	received 3/13/2009 for alteration to 374214 by the venting of the burner exhaust to dust collector of 496416. P/C issued 6/24/2009.
414800	received 4/30/2003 to change NOx factor for $NaNO_3$ reagent - P/O pending
374214	P/O F36574 issued 1/24/2001 for C/O
178394	P/O D34309 issued 11/29/1990

FURNACE 7 (device no. D26)	
562507	**Received 4-10-2014 for change of condition to prohibit the charging of arsenic metal to this furnace.**
496428	received 3/13/2009 for alteration to 374215 by the venting of the burner exhaust to dust collector of 496416. P/C issued 6/24/2009.
415067	received 5/07/2003 to change NOx factor for $NaNO_3$ reagent - P/O pending
374215	P/O F36570 issued 1/24/2001 for C/O
178395	P/O D34310 issued 11/29/1990

FURNACE 8 (device no. D28)
562508 Received 4-10-2014 for change of condition to prohibit the charging of arsenic metal to this furnace.
496429 received 3/13/2009 for alteration to 374216 by the venting of the burner exhaust to dust collector of 496416. P/C issued 6/24/2009.
415069 received 5/07/2003 to change NOx factor for $NaNO_3$ reagent - P/O pending
374216 P/O F36707 issued 1/25/2001 for C/O
178396 P/O D34311 issued 11/29/1990

FURNACE 9 (device no. D30)
562509 Received 4-10-2014 for change of condition to prohibit the charging of arsenic metal to this furnace.
496432 received 3/13/2009 for alteration to 374217 by the venting of the burner exhaust to dust collector of 496416. P/C issued 6/24/2009.
415071 received 5/07/2003 to change NOx factor for $NaNO_3$ reagent - P/O pending
374217 P/O F36708 issued 1/25/2001 for C/O
178397 P/O D34312 issued 11/29/1990

FURNACE A (device no. D17)
562510 Received 4-10-2014 for change of condition to prohibit the charging of arsenic metal to this furnace.
533210 Received 3-7-2012 for change of conditions to change NOx factor for $NaNO_3$ reagent.
496424 Received 3/13/2009 for alteration to 374199 by the venting of the burner exhaust to dust collector of 496416. P/C issued 6/24/2009. P/O G14026 issued (in database) on 6/30/2011. Official TV Facility Permit issued (Section D) on 7-28-2011.
374199 P/O F36597 issued 1/24/2001 for C/O
178384 P/O D22935 issued 4/11/1990

FURNACE B (device no. D19)
562511 Received 4-10-2014 for change of condition to prohibit the charging of arsenic metal to this furnace.
533211 Received 3-7-2012 for change of conditions to change NOx factor for $NaNO_3$ reagent.
496425 Received 3/13/2009 for alteration to 374200 by the venting of the burner exhaust to dust collector of 496416. P/C issued 6/24/2009. P/O G14027 issued (in database) on 6/30/2011. Official TV Facility Permit issued (Section D) on 7-28-2011.
374200 P/O F36581 issued 1/24/2001 for C/O
178385 P/O D22932 issued 4/11/1990

FURNACE E (device no. D34)	
562512	**Received 4-10-2014 for change of condition to prohibit the charging of arsenic metal to this furnace.**
533213	Received 3-7-2012 for change of conditions to change NOx factor for $NaNO_3$ reagent.
496434	Received 3/13/2009 for alteration to 374201 by the venting of the burner exhaust to dust collector of 496416. P/C issued 6/24/2009. P/O G14033 issued (in database) on 6/30/2011. Official TV Facility Permit issued (Section D) on 7-28-2011.
374201	P/O F36579 issued 1/24/2001 for C/O
178386	P/O D22933 issued 4/11/1990

FURNACE F (device no. D36)	
562513	**Received 4-10-2014 for change of condition to prohibit the charging of arsenic metal to this furnace.**
533214	Received 3-7-2012 for change of conditions to change NOx factor for $NaNO_3$ reagent.
496435	Received 3/13/2009 for alteration to 374202 by the venting of the burner exhaust to dust collector of 496416. P/C issued 6/24/2009. P/O G14034 issued (in database) on 6/30/2011. Official TV Facility Permit issued (Section D) on 7-28-2011.
374202	P/O F36569 issued 1/24/2001 for C/O
178387	P/O D23197 issued 4/18/1990

FURNACE G (device no. D32)	
562514	**Received 4-10-2014 for change of condition to prohibit the charging of arsenic metal to this furnace.**
533215	Received 3-7-2012 for change of conditions to change NOx factor for $NaNO_3$ reagent.
496433	Received 3/13/2009 for alteration to 374204 by the venting of the burner exhaust to dust collector of 496416. P/C issued 6/24/2009. P/O G14032 issued (in database) on 6/30/2011. Official TV Facility Permit issued (Section D) on 7-28-2011.
374204	P/O F36578 issued 1/24/2001 for C/O
178388	P/O D23195 issued 4/18/1990

FURNACE 1 (device no. D7)	
562515	**Received 4-10-2014 for an alteration of pot furnace no. 1 (device D 7) by the re-routing of the ventilation of this furnace from the hard lead baghouse (device C46) to the modified APCS 2 of A/N 562498. This pot furnace will be used in conjunction with arsenic metal additions.**
533205	Received 3-7-2012 for change of conditions to change NOx factor for $NaNO_3$ reagent.
496437	Received 3/13/2009 for alteration to 374206 by the venting of the burner exhaust to dust collector of 496416. P/C issued 6/24/2009. P/O G14035 issued (in database) on 6/30/2011. Official TV Facility Permit issued (Section D) on 7-28-2011.
374206	P/O F36585 issued 1/24/2001 for C/O
178389	P/O D34293 issued 11/29/1990

LEAD SCRAP MELTING SYSTEM NO. 1	
564346	**Received 5-23-2014 for an alteration the reverberatory furnace by the venting of this furnace to the modified APCS 1 of A/N 562503.**
559500	Received 1-9-2014 to replace the reverberatory furnace ram feeders with a screw conveyor
374176	Received 8/31/2000 for change of ownership/alteration to reverb feed drying system. P/O G12581 issued 3/23/2011.
374246	Received 9/14/2000, P/O F36741 issued to Exide 1/25/2001 for change of ownership
362493	Received 11/30/1999 for feed system alteration by GNB - cancelled
337317	Received 3/4/1998, P/O F17704 issued to GNB on 11/30/1998

AIR POLLUTION CONTROL SYSTEM NO. 5 (HARD LEAD BAGHOUSE)	
564348	**Received 5-23-2014 for an alteration by the removal of the ventilation of the cupola furnace thimble hoods and two lead refining pot furnaces and the re-routing of the affected ventilation points to the new modified APCS 2 of A/N 562498.**
558213	Received 11/14/2013 to add a HEPA filter dust collector to outlet of baghouse.
501060	Received 7/30/2009 to add additional venting by installing a new exhaust duct from this baghouse to the new rotary dryer total enclosure building. P/C issued 3/30/2010. P/O G14042 issued 6/30/2011.
374194	Application received on 9/14/2000 for C/O. P/O F73819 issued 2/18/2005 to Exide.
123780	Application received on 8/29/1984. P/O M40004 issued on 8/29/1984 to GNB

PROCESS DESCRIPTION

BACKGROUND

In accordance with the California Air Toxics "Hot Spots" Act (AB2588), Exide submitted a health risk assessment (HRA) for the Exide Technologies facility located at 2700 South Indiana Street, Vernon, California. The report was prepared by a consulting group, ENVIRON International Corporation (ENVIRON), hired for this task by Exide. ENVIRON prepared a draft AB2588 Health Risk Assessment (HRA) for Exide using the emission data from source tests conducted in 2010; this draft report was submitted to SCAQMD on March 1, 2012 (since this report was started in 2011 and has been referred as 2011 report in various communications and presentations, hereinafter, it is referred as the "2011 Draft Report").

Per the review comments on the 2011 Draft Report by SCAQMD, ENVIRON prepared a revised report. ENVIRON also included the emission data from the source tests conducted for the Hard Lead Baghouse and Neptune Scrubber stacks in 2012 by using the averages of the 2010 and 2012 source test data per the instruction of SCAQMD staff.

The amended HRA was submitted on 1-15-2013. This HRA was reviewed by the SCAQMD AB2588 group. Corrections to the initial analysis were performed by the SCAQMD and the results were transmitted to Exide in a March 1, 2013 HRA letter.

After making corrections to the final HRA report submitted by Exide, the SCAQMD reported the following results in the 3-1-2013 HRA letter:

1. Maximum individual worker cancer risk (MICRw) = 156 in a million at a worker receptor 300 meters northeast of the facility

2. Maximum individual residential cancer risk (MICRr) = 22 in a million at a residential receptor 1,400 meters north of the facility

3. Cancer burden of 10.

4. Maximum chronic hazard index (HIC) = 63 at the same worker receptor

5. Maximum acute hazard index (HIA) = 3.8 along eastern fence line

The main driver of these health risk effects is arsenic. Arsenic emissions account for about 90% of the cancer risk effects.

This HRA is the first step required in an ongoing Rule 1402 evaluation by the SCAQMD AB2588 group. These emissions have resulted in an existing cancer risk greater than 25 in a million and a cancer burden greater than 0.5. These risk levels triggered requirements in Rule 1402 for a Risk Reduction Plan (RRP) which is the subject of this evaluation.

Exide has performed extensive source tests, beginning primarily in 2010, and continuing to the present time, which have revealed that the main source of health risk can be attributed to arsenic emissions from the cupola (blast) furnace. SCAQMD has also performed tests in 2013 which have verified this fact and which have provided extensive photographic and videographic evidence during the source tests indicating that while the wet scrubbing system at Exide is adequate for the control of arsenic emissions (the "Neptune scrubber" system), dry filter baghouses, such as the hard lead baghouse (device C46) venting the cupola furnace thimble hoods has limited ability to control arsenic since a significant amount appears to be existing in a gaseous form (primarily sublimed arsenic trioxide) at normal atmospheric temperature and pressure.

Exide previously applied for, and was granted, a Permit to Construct for a thimble cover door to reduce emissions of arsenic from the cupola furnace. However, based on observations in the field, especially as recorded in images and videos, it has been determined that a significant amount of process gases were escaping capture by the Neptune scrubber system due to limitations in air flow rate to the cupola furnace, from various locations on this device, as leaks.

Due to the presence of periodic process gas leaks from the cupola furnace, it has been determined that the source test results on the previous equipment configuration could not be used to demonstrate a reliable, quantifiable, and permanent reduction in health risk due to arsenic emissions.

It has been determined that negative pressure in the smelting furnaces at this facility is required at all times during operation in order to ensure a true reduction in health risk from this operation. Process emissions containing significant amounts of arsenic will be routed to controls which contain venturi and tray scrubbers for the adequate control of arsenic emissions, especially those arsenic emissions existing in the gaseous form.

The following discussion provides specific details of the equipment modifications required to achieve compliance with the risk reduction requirements in the RRP for this facility required by Rule 1402.

PROCESS EQUIPMENT CONFIGURATION

Exide Technologies is a secondary lead smelter. The subject permit applications were submitted to install an additional venturi scrubber and an additional tray type scrubber in air pollution control system no. 2 which vents the blast furnace. The following diagram was submitted by the applicant and shows the equipment configuration following the installation of additional equipment under the initial RRP proposal. This configuration evolved during the course of this evaluation:

SOUTH COAST AIR QUALITY MANAGEMENT DISTRICT

ENGINEERING AND COMPLIANCE

APPLICATION PROCESSING AND CALCULATIONS

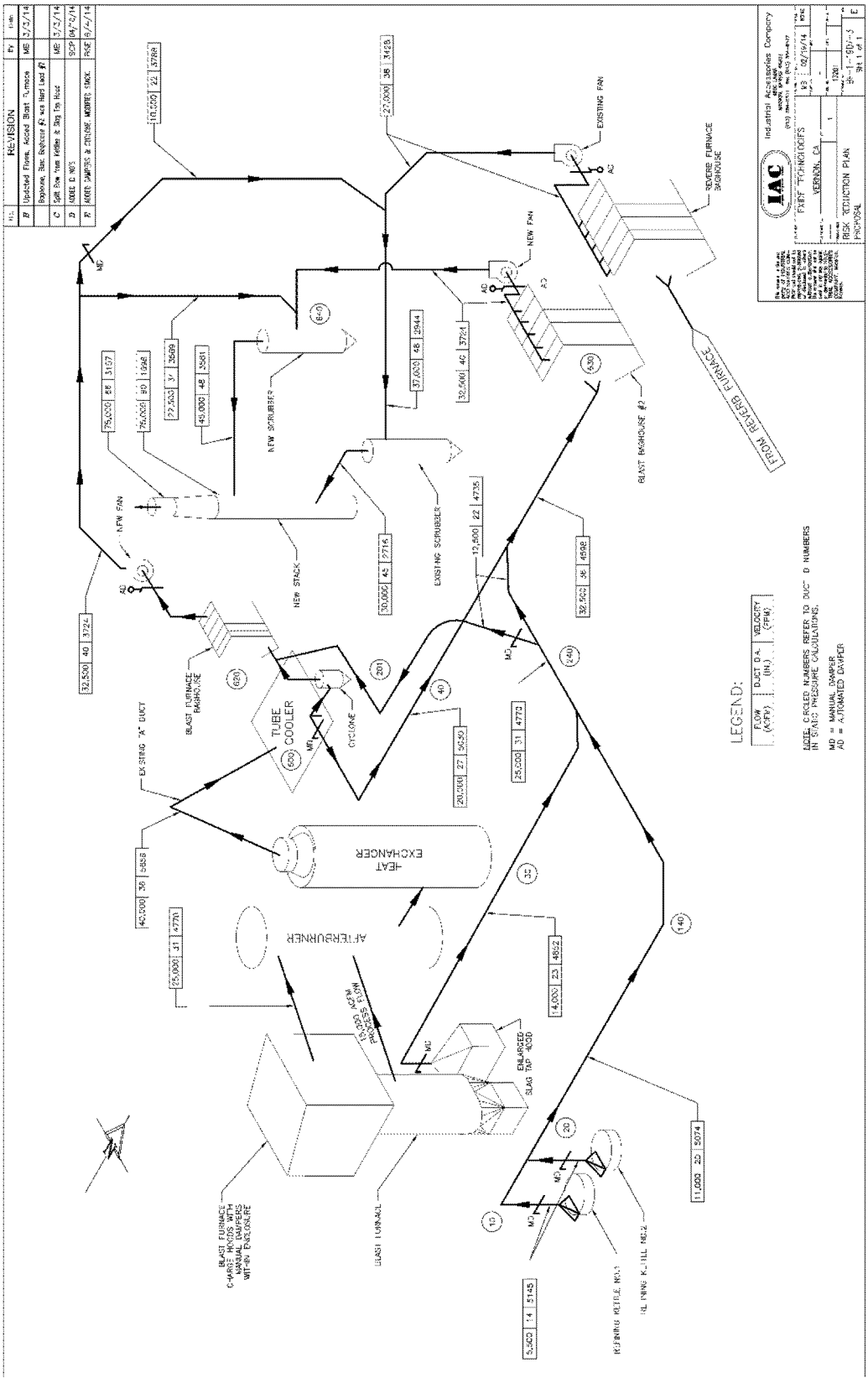

The afterburner proposed in the diagram on the preceding page is the original afterburner historically in operation at this facility. It is a large structure, approximately 6 feet in diameter and 32 feet tall. The afterburner was originally designed to process approximately 10,000 CFM of exhaust gases very concentrated in carbon monoxide (CO). The concentration of CO was so high that it was possible to maintain a temperature of approximately 2,200 °F in the afterburner under the original flow rate.

The modification to the air pollution control system serving the cupola furnace initially contained a proposal to increase the exhaust gas load to the afterburner from an initial 10,000 CFM to a final total flow rate of 40,000 CFM (15,000 CFM from the blast furnace and 25,000 CFM from the enhanced cupola furnace thimble hoods and enclosure, as indicated in revision E of the drawing on the previous page of this report.)

In the response letter from Exide to the SCAQMD dated March 4, 2014, Exide included the following excerpt towards the end of the document:

> To be cooled from a nominal afterburner exit of 1500F to below 400F
> Cooling = 147,500 lb/hr * 0.263 *(1500-400) = **42.6 MMBTU/hr**
> Future cooling need is 1.9X current demonstrated performance
> *(current capacity likely higher than current demonstrated performance)*

Exide claimed initially that the cooling of exhaust gases from the proposed system would require the handling of around 43 MMBTU/hr, even though the afterburner could produce only 10 MMBTU/hr. Obviously, some of the extra heat could have been generated by the cupola furnace itself, but the exact amount was in question.

Upon further investigation, it was discovered that the SCAQMD's source testing group made observations of the actual temperature in the "afterburner riser", the conduit connecting the cupola furnace and the afterburner. Several photos of instrument panel displays were taken, such as the following one:

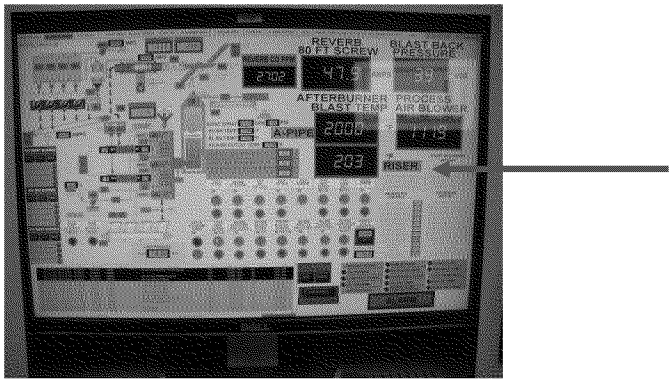

It is apparent from this photograph that the temperature in the riser was approximately 203 °F on the day that this picture was taken (8/13/2013 at 8:39:40 AM).

Other pictures show similar temperatures generally in the range from 200 °F to about 250 °F. This is much cooler than originally anticipated. Apparently, the high temperature gases produced in the cupola furnace crucible are significantly cooled off by the pile of furnace feed present under normal operating conditions and by the water jacket surrounding the cupola furnace. This

leaves very little useful heat for the cupola furnace exhaust gases entering the afterburner riser. This cooling effect is an indicator that the temperature rise in the afterburner is mainly due to secondary exhaust gas combustion (the combustion of CO). The initial coke heat of combustion is almost completely lost to the feed and water jacket heat exchange.

The air temperature above the cupola furnace is expected to be in the range between 80 ^{o}F and about 200 ^{o}F. Therefore, in the worst case (the case requiring the most afterburner heat output), calculations indicate that a minimum of 53 MMBTU/hr firing rating is required for cold furnace startup at full operating flow rate. The 53 MMBTU/hr value agrees more closely with Exide's calculated "cool down" heat load of 43 MMBTU/hr then with the existing afterburner rating of 10 MMBTU/hr.

Exide was informed about this discrepancy between the originally proposed 10 MMBTU/hr afterburner and the calculated heat load required to maintain the minimum temperature of 1400 ^{o}F required for adequate control efficiency for CO, ROG, and toxic organic compounds produced in the cupola furnace. This was accomplished in emails dated 6/19/2014 and 6/20/2014. Exide provided a partial response to the 6/19/2014 email on 6/20/2014. Exide subsequently requested a technical meeting to discuss the issues and a meeting was held at the SCAQMD on 6/27/2014. In this meeting, Exide proposed lowering the air flow rates in the original proposal while increasing the afterburner rating to accommodate the larger air flow rates. Exide also provided new assumptions for heat balance calculations and indicated that additional information would be provided in writing.

On July 1, 2014, Exide sent an email with the additional information indicated in the previous meeting on 6/27/2014 and indicated that they proposed to install a new low NOx burner in the afterburner with a heat output range between 25 MMBTU/hr and possibly as high as 38 MMBTU/hr.

The 25 MMBTU/hr proposal is a minimal proposal required to achieve minimum afterburner temperature with careful process control. However, on 7/9/2014, Exide communicated telephonically to indicate that they were going to implement the 38 MMBTU/hr burner option and that the afterburner tube may be increased by an additional 5 feet in length for additional residence time. Final details such as exact burner model number were pending.

On July 15, 2014, Exide was requested via email to provide a more detailed start-up procedure for the cupola furnace. On July 16, 2014, Exide provided an explanation via email which indicated that they were not planning to run the thimble enclosure ventilation to the afterburner until after lead metal and coke charging was first started in the cupola furnace. On July 18, 2014, AQMD staff responded that it was a violation of permit conditions and rule requirements to use this procedure since it would lead to the release of uncontrolled emissions from the initial metal melting and coke combustion during the startup procedure. Exide was informed that all originally designed air flow rates are required during cold startup and that this would require an afterburner startup with sufficient firing rating of approximately 60 MMBTU/hr.

On July 23, 2014, an office conference was held with Exide engineering staff to address the issues raised in the July 18, 2014 email message to Exide. Exide re-iterated that they believed that a 38 MMBTU/hr burner was sufficient since they planned on lower air flow rate demand during the cupola furnace start-up period. Additional technical information was requested from Exide including a heat transfer calculation to verify cooling system capacity to handle higher heat loads resulting from the proposed modification. Exide was informed that the initial compliance requirement for the new system would consist of permit conditions requiring smoke tests on the enhanced cupola furnace thimble enclosure during initial startup and again during full operation.

SCAQMD staff felt that maximum air should be drawn through the thimble hood/enclosure to ensure all the emissions are properly collected and controlled during startup and under normal operating conditions. Exide also indicated that there were major technical issues starting up the blast furnace with full air flow rates - the currently proposed design would make it very difficult to maintain a low air flow rate in the blast furnace and simultaneously maintain a high air flow rate in the thimble enclosure since both air streams merge in the common afterburner and there is no practical method to add damper controls on the afterburner riser connecting the blast furnace and the afterburner. Any object, such as a damper, in the riser could potentially lead to clogs in the riser (this was one of the issues that eventually led to the requirement for this RRP).

At this point in the analysis of the proposed modifications, it became apparent that a much broader plant re-design would be required to accommodate the substantially larger heat burden resulting from the anticipated afterburner enlargement.

On July 25, 2014, Exide communicated telephonically to indicate that in their early discussions in investigating and preparing their RRP, a new oxidizer for the thimble air was touched on, but it was dismissed because they felt they had an existing afterburner that would only need minor enhancements to fulfill the needs to satisfy the other proposed changes in the RRP. However, with the AQMD's differing opinion on proper ventilation during start up and operation of the blast furnace, the required "enhancement" of the existing afterburner results in a significant and widespread system re-design. In summary, Exide indicated that they were now **reconsidering routing the thimble air to a separate control system (new baghouse & RTO) and then routing that exit stream to the new scrubber system.** The advantage here is they could draw the full maximum thimble air from the very beginning of start up of the blast furnace without inhibiting the actual operational start-up of the blast furnace.

On July 31, 2014, a third meeting was held with Exide engineering staff during which they proposed a separate dust collector and RTO to enable the venting of the originally specified amount of air from the thimble hoods and enclosure during cold startup. The newly revised RRP facility equipment configuration is indicated in the drawing on the following page.

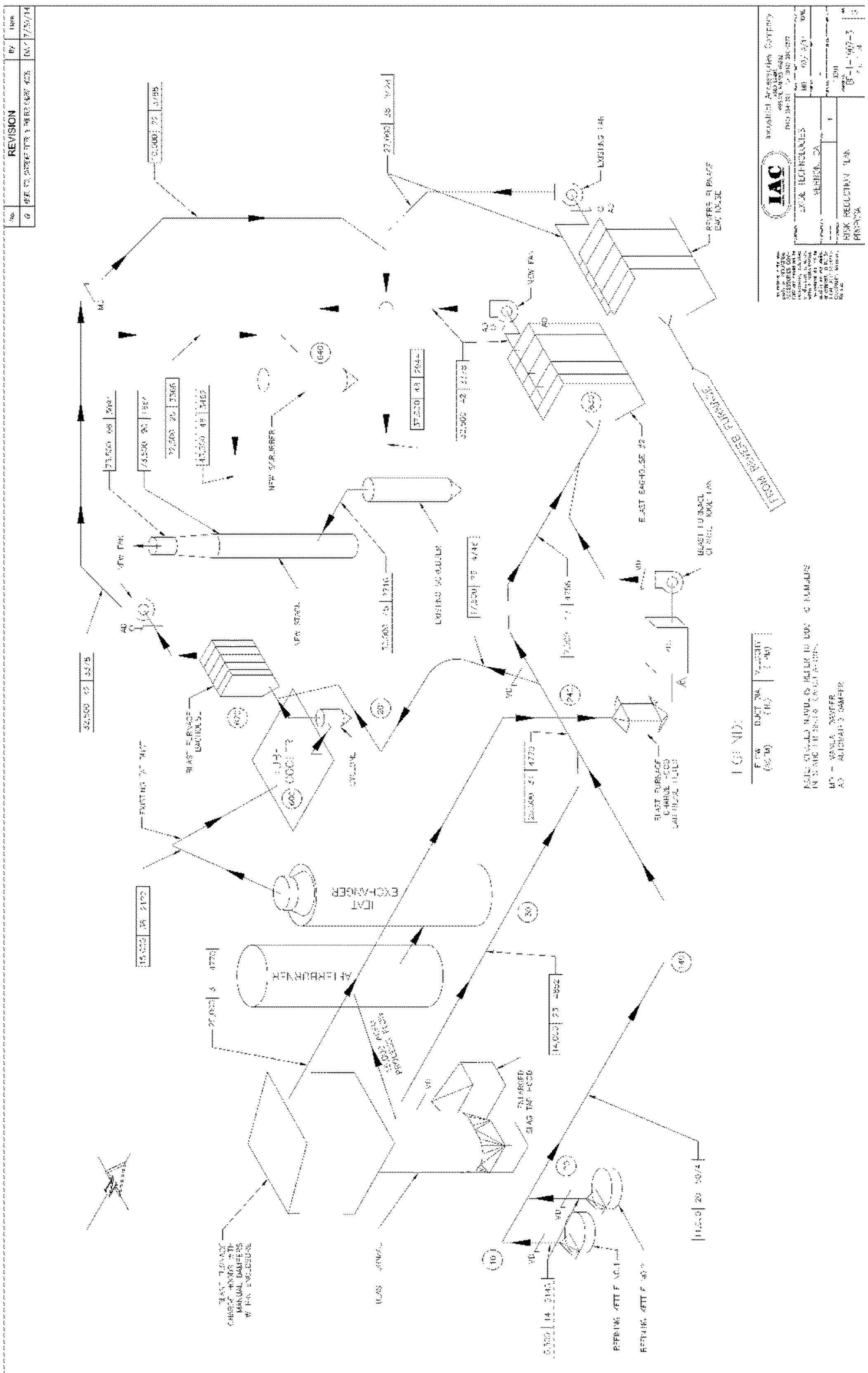

The following flow charts represent the new equipment configuration, along with Title V permit device numbers:

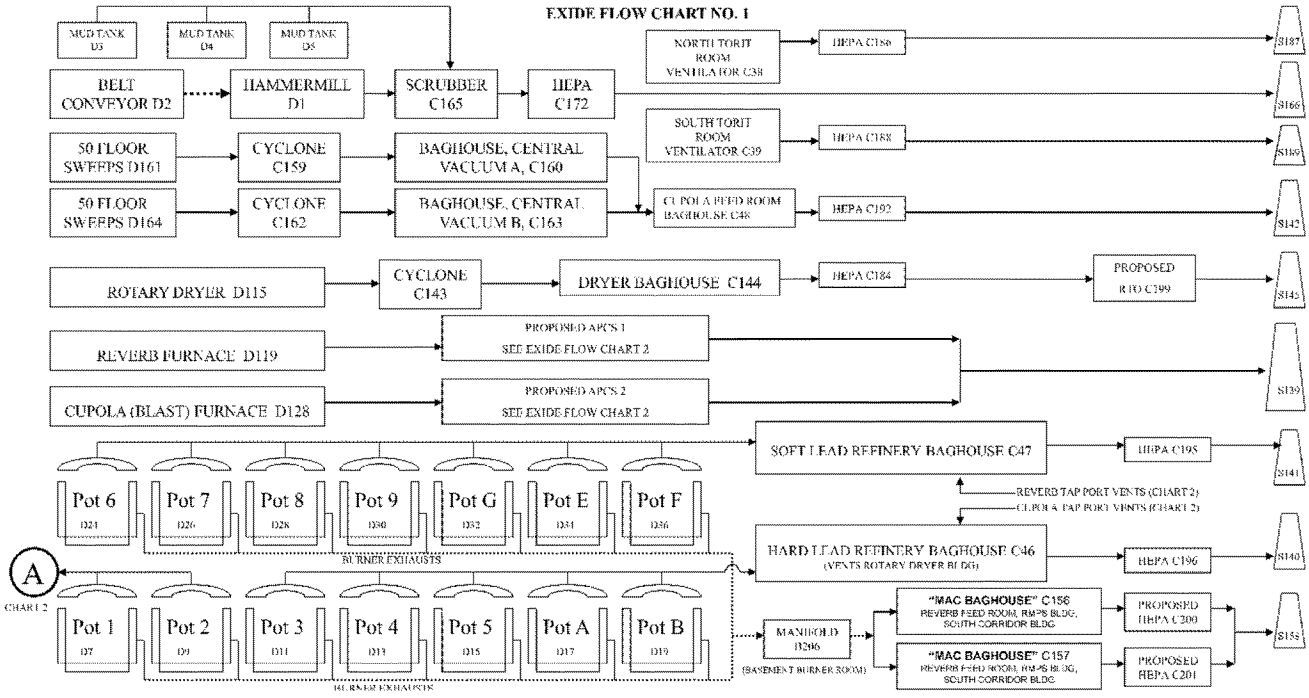

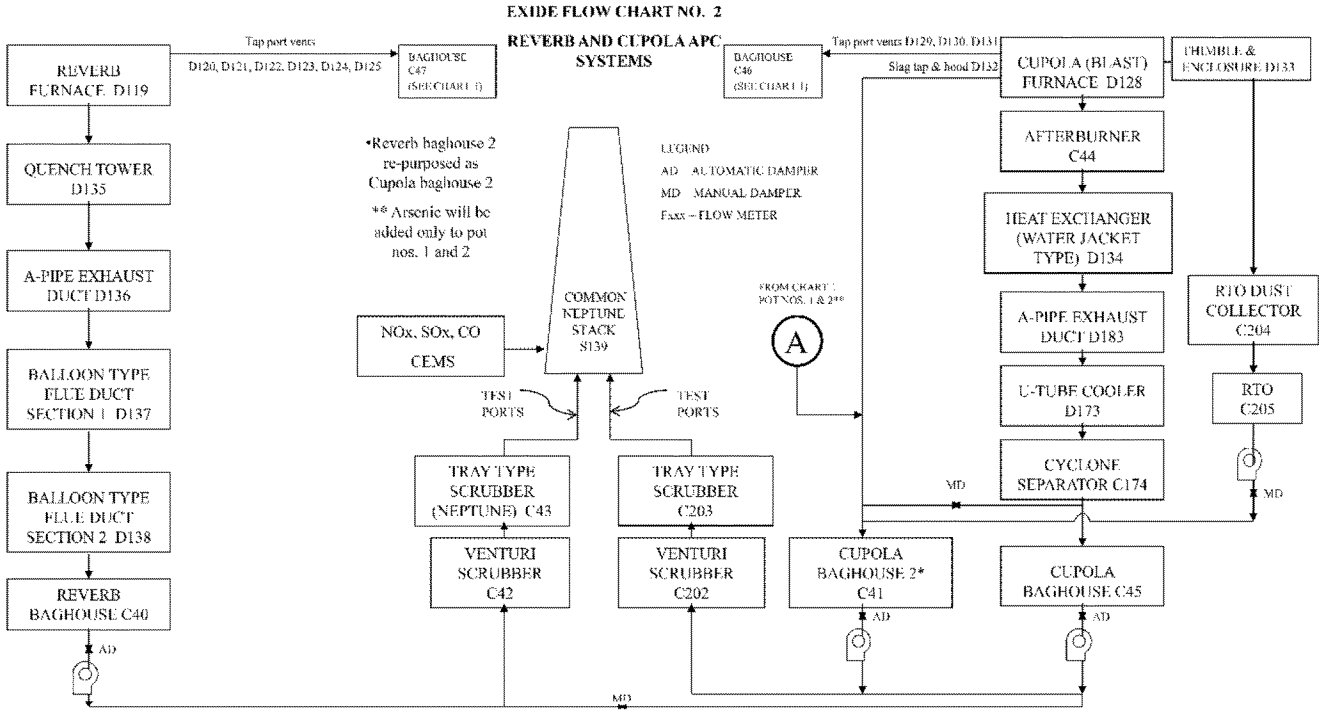

The following drawing is based on the final equipment drawing showing the main elements of the new proposal:

1. Air flow rate from cupola increase from 10,000 CFM to 15,000 CFM (maximum).
2. Enhanced enclosure around thimble charging port on top of cupola furnace. The thimble hoods inside of this enclosure have been re-routed from the hard lead baghouse (device C46) to a new pre-filtering dust collector and RTO (devices C204 and C205).
3. The enhancement of the cupola furnace slag tapping port hood.
4. The venting of pot furnaces where arsenic is added to the enhanced control system where wet scrubbers are used.
5. Increase overall ventilation air flow rates.

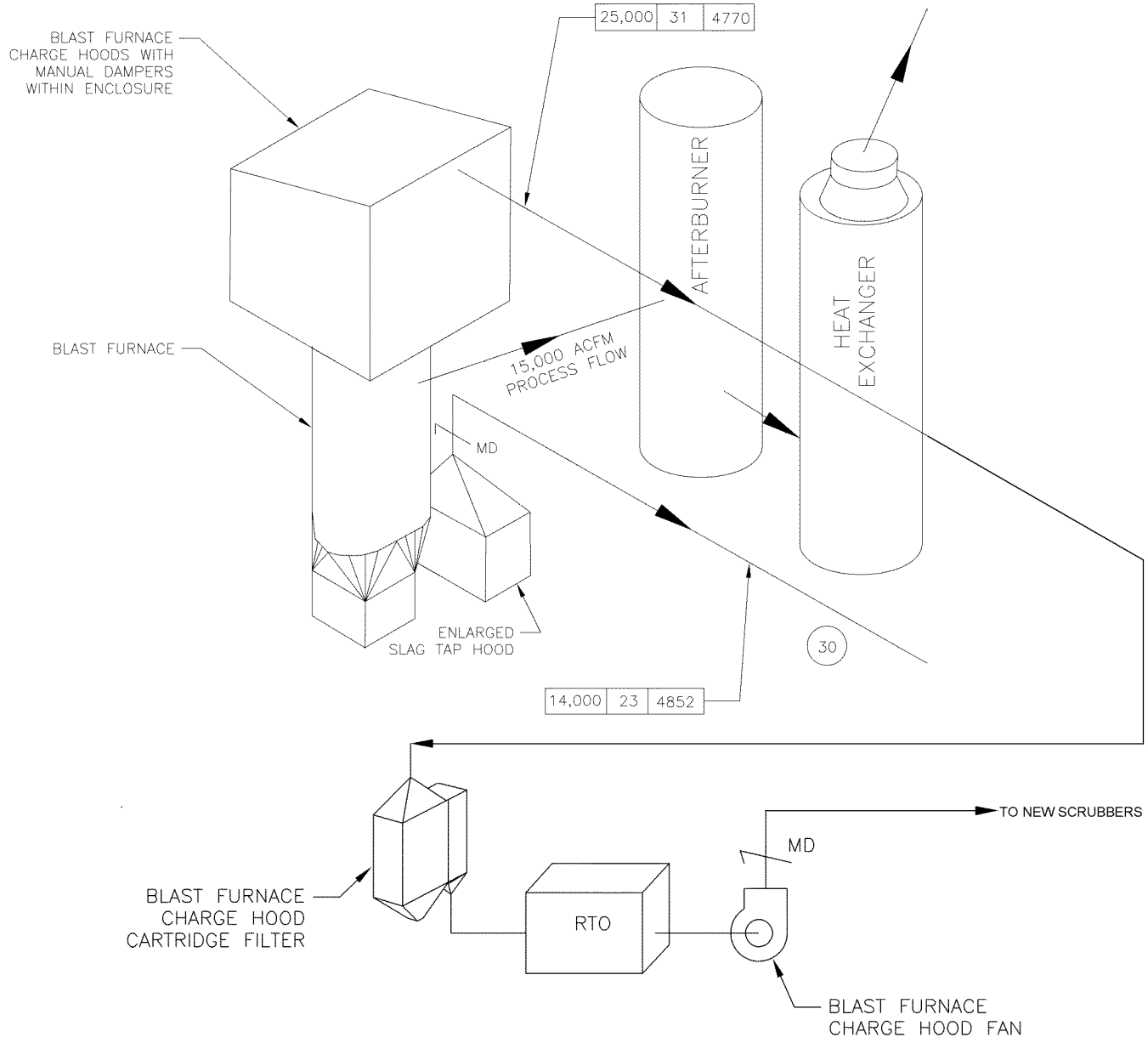

Due to the complexity of the exhaust system in the proposed equipment configuration, the flow rates in the various duct branches need to be monitored in order to ensure proper operation of the proposed system. Permit conditions will require flow meters at various locations as specified in the following drawing:

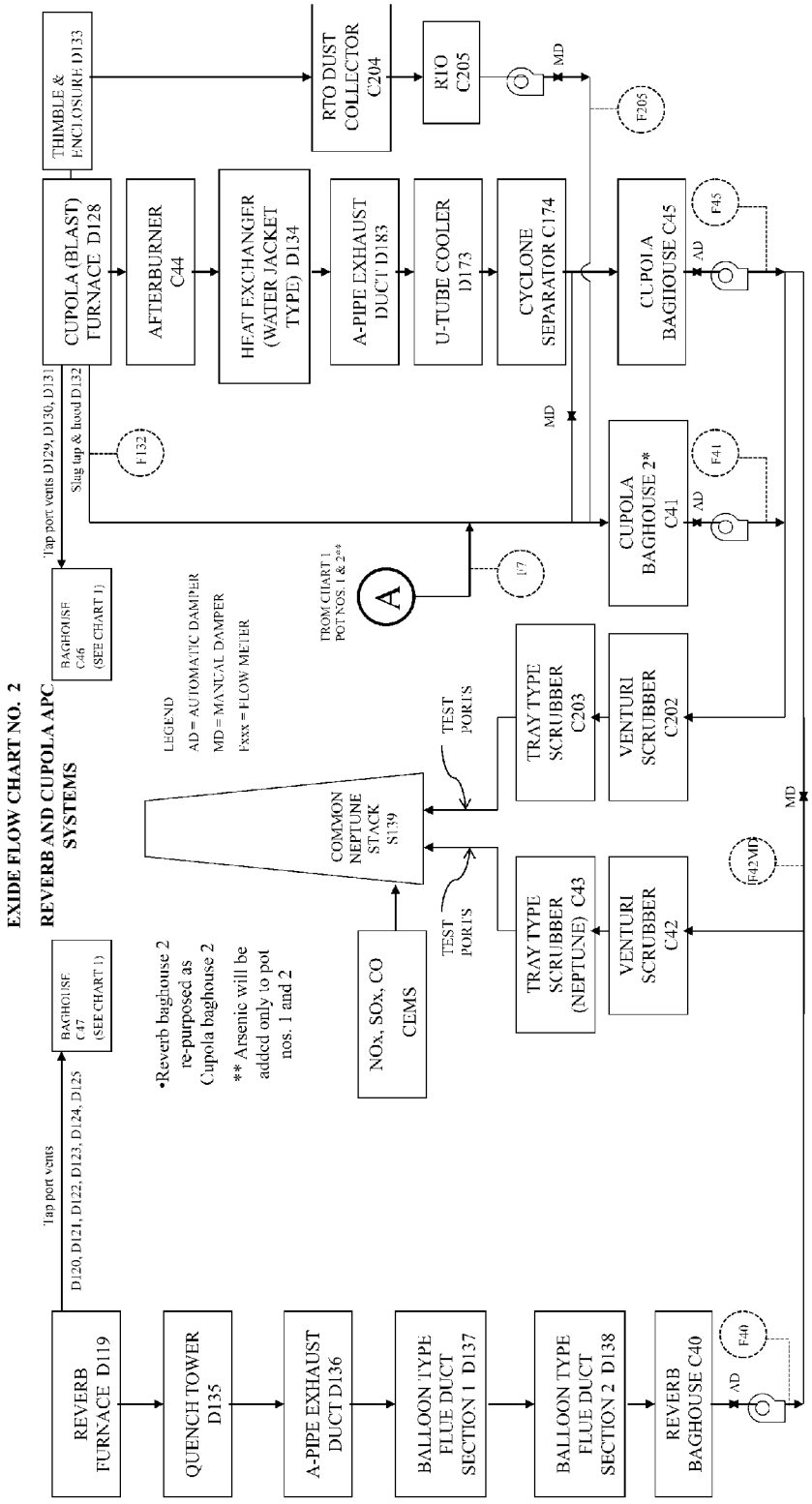

The following sections of this report describe the various elements of the modifications to the air pollution control systems at this facility.

GENERAL PURPOSE OF PROPOSED MODIFICATIONS

The purpose of this project is to ensure that exhaust gas streams containing high levels of arsenic emissions are vented to appropriate air pollution control systems capable of controlling arsenic emissions which exist in gaseous form. They are also designed to control gas streams containing organic air contaminants, carbon monoxide, and oxides of sulfur which previously escaped control because they were vented only to dry filter media or were emitted into the building enclosure due to a lack of sufficient negative pressure in the reverb and cupola furnaces.

MODIFIED AIR POLLUTION CONTROL SYSTEM NO. 1 (REVERB)

This system currently contains two baghouses connected in parallel which are designated to handle the process gases from the reverberatory furnace. One of these baghouses (device C41) will be disconnected from the reverb APC system and connected to the cupola furnace APC system no. 2 as previously indicated in the drawings in this report. The re-purposed baghouse will be used to vent additional equipment vented by proposed APCS 2 including two lead pot furnaces, an RTO exhaust outlet, an enhanced cupola thimble hood enclosure and an enhanced cupola furnace slag tapping hood.

A second venturi/tray scrubber is proposed to increase the air flow rate primarily from the cupola furnace and secondarily to provide additional ventilation to the reverberatory furnace. The increased air flow rates are intended to ensure that negative pressure is maintained in both furnaces.

MODIFIED AIR POLLUTION CONTROL SYSTEM NO. 2 (CUPOLA)

The process air flow rate in the blast furnace will be increased from 10,000 ACFM to as much as 15,000 ACFM (as needed) by pulling more air from this furnace. The increased air flow rate will ensure that negative pressure is maintained in this furnace for compliance with Rule 1420.1. The baghouse of device C41 will be used to serve additional equipment vented by proposed APCS 2 including two lead pot furnaces, an RTO exhaust outlet, an enhanced cupola thimble hood enclosure and an enhanced cupola furnace slag tapping hood. The pot furnaces were previously vented to the hard lead baghouse (device C46). The slag tapping hood is being enlarged to better capture gases which are released during slag tapping operations. In addition, the thimble hood vents, previously connected to device C46 will now be rerouted to the RTO of device C205. The applicant is also proposing to enhance the integrity of the cupola furnace thimble cover enclosure to ensure that fugitive emissions are not released from the top of the blast furnace. 25,000 CFM of air from the thimble enclosure and hoods will be vented to the RTO.

The afterburner firing rate was designed to handle 10,000 CFM of air. It will now handle a maximum of 15,000 CFM of air under the current proposal. The existing burners will be used. The start-up procedure will require a graduated increase in air flow rate until the cupola furnace is fired on a sufficient amount of carbon coke to maintain minimum required temperature in the afterburner. Refer to the calculations section of this report for details regarding the heat balances for the afterburner.

POT FURNACES

The pot furnaces of devices D7 and D9 are being rerouted from the hard lead baghouse ventilation to cupola furnace baghouse no. 2 (device C41). Permit conditions are being modified to prevent the charging of arsenic metal to all pot furnaces except for D7 and D9. The purpose of these modifications is to ensure that any major arsenic emissions are controlled by the wet scrubber system in APCS No. 2.

PRINCIPLE OF ARSENIC EMISSIONS CONTROL

The type of arsenic emissions from the blast furnace has been determined to contain a significant fraction of arsenic compounds in the gas phase. Source tests have shown that a large fraction of the arsenic emissions from the hard lead baghouse are captured in the liquid part of the source sampling impinger trains after going through the dry filter in the sampling train. This implies that the arsenic is passing through the dry filter in the gas phase. The gaseous arsenic, expected to be mainly in the form of arsenic trioxide, based on chemistry, readily dissolves into the water in the impingers. Source tests have also shown that the emission rates of arsenic from the Neptune scrubber stack are extremely small. The historical problem has been with the dry arsenic emissions, in the gas phase, not being captured by the hard lead baghouse. By capturing and sending the gas phase arsenic emissions to the scrubber, the emissions of arsenic will be effectively controlled.

This facility operates 24 hours/day, 7 days/week, and 52 weeks/year. The large furnaces are typically shut down, rebuilt, and restarted about 2 or 3 times per year.

CALCULATIONS

1. CUPOLA AFTERBURNER

A. CALCULATION OF AFTERBURNER OPERATING CONDITIONS AFTER PROPOSED MODIFICATION (INCREASING AIR FLOW RATE TO 15,000 CFM)

Need to achieve 1,400 °F prior to charging coke or feed to Cupola in order to comply with BACT (ROG and CO), and Rule 1401 risk (due to toxic organics.)

$Q = m \times Cp \times (T_2 - T_1)$

Q = BTU/hr

Cp = BTU/(lb x °F)

T = °F

Given: V = 15,000 CFM (not counting thimble enclosure airflow of 25,000 CFM)
Cp = 0.246 BTU/(lbair x °F)
T_2 = 1,400 °F
T_1 = 80 °F

m = 15,000 cf/min. x 0.0734 lb/cf x 60 min/hr = 66,060 lbs air/hr

$Q_{required} = m \times CP \times (T_2 - T_1)$

$Q_{req} = 66{,}060 \times 0.246 \times (1400 - 80) = 21.4 \times 10^6$ BTU/hr

Q available = 10×10^6 BTU/hr (afterburner) + 1×10^6 BTU/hr (cupola) = 11×10^6 BTU/hr Total

Reduced startup flow rate for 1,400 °F = 11/21.4 x 15,000 CFM = 7,710 CFM

The applicant has stated that a reduced CFM will be used during the cupola furnace startup procedure. Once the afterburner and cupola crucible are up to temperature, coke charging will commence and additional energy will be available from the carbon monoxide produced by the coke combustion:

Data:

For 8/25/2013, the process data log (CP2 report) for the cupola furnace indicated the following coke charge rate:

1. CUPOLA AFTERBURNER

(cont.)

PWcoke = 15,025 lbs/22.62 hours = 664.2 lbs/hr
PWtotal = 151.7 tons/day.

PWcoke max = 664.2 lbs/hr x 178.32 tons/151.7 tons = 780.8 lbs/hr
(PW permit limit = 178.32 tons/day)

CO gas rate max = 780.8 lbs/hr x 0.9 lbs C/lb coke x 28 lbs CO/12 lbs C = 1,640 lbs CO/hr
(afterburner inlet)

Q_{CO} = 1,640 lbs/hr x 4,348 BTU/hr = 7.13×10^6 BTU/hr

(For verification purposes, it should be noted that a source test performed in 1993 by Engineering Science during an afterburner malfunction measured a CO emission rate as high as 1,360 lbs/hr from the Neptune scrubber stack.)

It is more accurate to calculate the heat contribution from the coke by calculating the heat of combustion of the CO, since the majority of the coke heat of combustion is removed from the exhaust gas stream by the cupola water jacket heat exchanger prior to the afterburner. The gases going into the afterburner are estimated to be between 200 °F and 400 °F.

$T_2 = Q/(m \times Cp) + T_1$

$m_{200°F}$ = (15,000)(0.0601)(60)
= 54,090 lbs/hr

Q_{CO} = 7.13×10^6 BTU/hr
Q afterburner gas = 10.0×10^6 BTU/hr

Q total = 17.13×10^6 BTU/hr

T_2 = $Q/(m \times Cp) + T_1$
= $(17.13 \times 10^6)/(54{,}090 \times 0.246) + 200$
= 1,487 °F

This exceeds the minimum BACT temperature requirement of 1,400 °F.

1. CUPOLA AFTERBURNER

(cont.)

It should be noted that the 15,000 CFM flow rate in the RRP proposal is just an upper limit of what the actual flow rate will be. In actual operating conditions, it is expected to be lower than this amount. The minimum temperature can be attained by modulating the air flow rate in addition to the rate of coke charging. In conclusion, it is expected that proper process control will ensure compliance with the minimum temperature limit and the Rule 1420.1 negative furnace pressure requirement given the proposed equipment operating parameters.

B. CALCULATION OF AFTERBURNER HEAT REQUIREMENT IF ALL PROCESS AIR IS VENTED TO THE AFTERBURNER

Since part of the critical design of the proposed fugitive emission control system includes the extra air flow rate added by the enhanced cupola furnace thimble enclosure, the present configuration will have to accommodate all 40,000 CFM of air flow. In order to accomplish this and meet the BACT temperature limit of 1,400 ^{o}F, the afterburner will need to have a much higher firing rate at **cold startup**, as calculated below:

$Q = m \times Cp \times (T_2 - T_1)$

Q = BTU/hr

Cp = BTU/(lb x ^{o}F)

T = ^{o}F

Given: V = 40,000 CFM (including thimble enclosure airflow of 25,000 CFM)
Cp = 0.246 BTU/(lbair x ^{o}F)
T_2 = 1,400 ^{o}F
T_1 = 80 ^{o}F

m = 40,000 cf/min. x 0.0734 lb/cf x 60 min/hr = 176,160 lbs air/hr

$Q_{required} = m \times CP \times (T_2 - T_1)$

$Q_{req} = 176{,}160 \times 0.246 \times (1400 - 80) = 57.2 \times 10^6$ BTU/hr

$Q_{cupola} = 1 \times 10^6$ BTU/hr (during start-up)

$Q_{afterburner\ required} = 57.2 \times 10^6$ BTU/hr - 1×10^6 BTU/hr = **56.2×10^6 BTU/hr**

1. CUPOLA AFTERBURNER

(cont.)

It would be physically impractical to install a burner of this size in the existing afterburner since all heat management devices downstream of the afterburner would be significantly affected, resulting in a requirement for complete system redesign. The afterburner tube (combustion chamber) would also need to be increased in height significantly to accommodate the larger burner and to maintain residence time requirements.

Exide has chosen a more practical approach in the final revised RRP proposal - the installation of a regenerative thermal oxidizer (RTO) dedicated to the thimble hoods and enclosure ventilation. This RTO will process the additional 25,000 CFM of air volume proposed in the RRP. This will enable the ventilation of full air flow rate from the thimble hoods and enclosure at all time from cold start to full furnace operation and it will separate the process air stream associated with the cupola furnace from the air stream for the thimble hoods and enclosure. Independent control of the flow rates in the afterburner from the flow rates in the thimble hoods and enclosure will simplify the ability to control parameters needed for maintaining negative pressure in the cupola furnace and the minimum temperature required in the afterburner.

C. CALCULATION OF RESIDENCE TIME FOR PROPOSED OPERATION

For cold start-up:

V (ACFM) = 7,710 ft^3/min. (see page 44)
T1 = 80 °F (ambient temperature)
T2 = 1,400 °F (BACT requirement)

$$V_{1400\,°F} = \frac{1{,}400 + 460}{80 + 460} \times \frac{7{,}710\ ft^3}{min\ min} = \frac{26{,}557\ ft^3}{sec} = 443\ ft^3$$

afterburner volume: H = 31'-9" = 31.75 ft
ID = 6'-0" = 6.00 ft
$V = (1/4)(\pi)(D^2)(H) = (0.25)(3.141592)(6)^2(31.75) = 898\ ft^3$

residence time: $T_{1\,1400\,°F} = \frac{898\ ft^3}{443\ ft^3} \times \frac{1\ sec}{} = 2.03$ seconds

1. CUPOLA AFTERBURNER
(cont.)

For normal operation:

V (ACFM) = 15,000 ft^3/min. (Applicant's Data)
@ T = 200 °F = 660 °R (estimate based on observations by SCAQMD staff)

$$V_{1487\,°F} = \frac{1487 + 460}{660} \times \frac{15{,}000\ ft^3}{min\ min\ sec} = \frac{44{,}250\ ft^3}{} = \frac{738\ ft^3}{}$$

afterburner volume: H = 31'-9" = 31.75 ft
ID = 6'-0" = 6.00 ft
$V = (1/4)(\pi)(D^2)(H) = (0.25)(3.141592)(6)^2(31.75) = 898\ ft^3$

$$\text{residence time: } T_{1487\,°F} = \frac{898\ ft^3}{738\ ft^3} \times \frac{1\ sec}{1} = 1.22 \text{ seconds}$$

This is greater than the minimum BACT 0.3 seconds residence time requirement.

D. AFTERBURNER TEMPERATURE PROBE LOCATIONS:

$$L_{startup} = 0.3\ \frac{sec}{2.03\ sec} \times \frac{31.75\ ft}{1} = 4.69\ ft = 4'\text{-}8''$$

(Note: At 1,400 °F during startup, the probe would have to be placed 18 feet downstream of the burner location.)

$$L_{normal} = 0.3\ \frac{sec}{1.22\ sec} \times \frac{31.75\ ft}{1} = 7.81\ ft = 7'\text{-}10''$$

The worst case is 7'-10", which occurs during normal operation. Therefore, this will be required in permit conditions.

E. AFTERBURNER NOx EMISSIONS AT 10 MMBTU/HR
(No changes to burners)

NOx baseline = final = 10 MMBTU/hr x 0.124 lbs/MMBTU
(max PTE) = 1.24 lbs/hr = 29.76 lbs/day max

NOx emissions are continuously monitored by the NOx CEMS on the common scrubber stack.

1. CUPOLA AFTERBURNER
(cont.)

F. AFTERBURNER MISCELLANEOUS CRITERIA EMISSIONS

Emissions of ROG are negligible and co-mingled with ROG from the cupola furnace. They are accounted for NSR purposes under the cupola furnace.

Emissions of SOx from natural gas combustion are neglible and are further reduced by the SOx scrubber. These emissions are co-mingled with cupola furnace emissions and are accounted under the cupola furnace NSR emissions.

Emissions of CO from natural gas combustion are negligible and comingled with CO from the blast furnace. They are accounted for under the blast furnace. CO emissions are continuously monitored by the CO CEMS on the common scrubber stack.

Emissions of PM10 from natural gas combustion are neglible and are further reduced by the venturi scrubber and baghouse. These emissions are co-mingled with cupola furnace emissions and are accounted under the cupola furnace NSR emissions.

Emissions are summarized in a table on page 55 of this report.

2. REGENERATIVE THERMAL OXIDIZERS (RTO's)

A. CALCULATION OF RESIDENCE TIME FOR ROTARY DRYER RTO

V (ACFM) = 15,200 ft^3/min. (Applicant's Data)
@ T = 220 °F = 680 °R (Applicant's Data)

$$V_{1500\,°F} = 1{,}500 \underset{680}{\underset{\text{min}}{\underset{\text{min}}{+460}}} \times \frac{15{,}200\ ft^3}{\text{sec}} = \frac{43{,}812\ ft^3}{} = \frac{730\ ft^3}{}$$

RTO combustion chamber volume: W = 6.90 ft.
(Note: Dimensions for 1 chamber) L = 5.93 ft.
(2 chambers total) H = 4.00 ft.
V = W x L x H x 2 = 327 ft^3

$$\text{residence time: } T_{1500\,°F} = \frac{327\ ft^3}{730\ ft^3} \times \frac{1\ \text{sec}}{} = 0.45 \text{ seconds}$$

B. CALCULATION OF RESIDENCE TIME FOR CUPOLA THIMBLE HOOD RTO

V (ACFM) = 25,000 ft^3/min. (Applicant's Data)
@ T = 120 °F = 580 °R (Applicant's Data)

$$V_{1500\,°F} = 1{,}500 \underset{580}{\underset{\text{min}}{\underset{\text{min}}{+460}}} \times \frac{25{,}000\ ft^3}{\text{sec}} = \frac{84{,}483\ ft^3}{} = \frac{1{,}408\ ft^3}{}$$

RTO combustion chamber volume: W = 8.00 ft.
(Note: Dimensions for 1 chamber) L = 10.00 ft.
(2 chambers total) H = 6.00 ft.
V = W x L x H x 2 = 960 ft^3

$$\text{residence time: } T_{1500\,°F} = \frac{960\ ft^3}{1{,}408\ ft^3} \times \frac{1\ \text{sec}}{} = 0.68 \text{ seconds}$$

C. CALCULATION OF REQUIRED COLD STARTUP FIRING RATES FOR RTO 's

For rotary dryer RTO:

Tcold = 80 °F Air density = 0.0734 lb/cf

T1 = Tin = 220 °F Air density = 0.0584 lb/cf
T2 = Tout = 313 °F

The required heat input is:
Q_{RTO} = mCp(T2-T1) = (15200*0.0584*60)(0.246)(313-220) = 1.2 MMBtu/hr
The non-regenerative heat requirement for a cold startup would be:
$Q_{non\text{-}RTO}$ = mCp(T2-T1) = (15200*0.0734*60)(0.246)(1500-80) = 23.4 MMBtu/hr
RTO'S have 90% heat recovery. Based on 90% heat recovery, the maximum heat required is:
$Q_{RTO\ MAX}$ = 23.4 MMBtu/hr x (1 - (90/100)) = 23.4 x 0.1 = 2.34 MMBtu/hr
The proposed burner rating is 2.5 MMBtu/hr.
2.5 > 2.34
Therefore, the burner rating is adequate for a cold startup.

For cupola thimble hood RTO:

T1 = Tin = 120 °F Air density = 0.0684 lb/cf
T2 = Tout = 235 °F

The required heat input is:
Q_{RTO} = mCp(T2-T1) = (25000*0.0684*60)(0.246)(235-120) = 2.9 MMBtu/hr
The non-regenerative heat requirement for a cold startup would be:
$Q_{non\text{-}RTO}$ = mCp(T2-T1) = (25000*0.0734*60)(0.246)(1500-80) = 38.5 MMBtu/hr
RTO'S have 90% heat recovery. Based on 90% heat recovery, the maximum heat required is:
$Q_{RTO\ MAX}$ = 38.5 MMBtu/hr x (1 - (90/100)) = 38.5 x 0.1 = 3.85 MMBtu/hr

The proposed burner rating is 4.6 MMBtu/hr.
4.6 > 3.85
Therefore, the burner rating is adequate for a cold startup.

D. ROTARY DRYER RTO EMISSIONS FROM NATURAL GAS COMBUSTION

A/N 559499 HOURS/DAY: 24.00
DAYS/WEEK: 7.00 RTO For Rotary Dryer
WEEKS/YEAR
OPERATING SCHED: : 52.00
(DAILY AND ANNUAL) DAYS/YEAR: 365.00

Max Firing Rate: 2.50000 (MMbtu/hr)
Usage factor: 1.00000 (max PTE)
Ave Firing Rate: 2.50000 (MMbtu/hr)

APCS EFFICIENCY

ROG	NOx	SOx	CO	PM10
0.00	0.00	0.00	0.00	0.00

FIRING RATE (MMbtu/hr)	EMISSION TYPE	FACTOR (LB/MMbtu)	R1 EMIS. (LBS/HR)	R2 EMIS. (LBS/HR)
2.50000	ROG	0.0067	0.01675	0.01675
2.50000	NOx	0.0365	0.09117	0.09117
2.50000	SOx	0.0008	0.00198	0.00198
2.50000	CO	0.2960	0.74011	0.74011
2.50000	PM10	0.0071	0.01786	0.01786

EMISSIONS SUMMARY

	ROG	NOx	SOx	CO	PM10
R1, lb/hr	0.0168	0.0912	0.0020	0.7401	0.0179
R1, lb/day	0.4020	2.1881	0.0474	17.7627	0.4286
R2, lb/hr	0.0168	0.0912	0.0020	0.7401	0.0179
R2, lb/day	0.4020	2.1881	0.0474	17.7627	0.4286
R2, lb/day (30 day average)	0.4020	2.1881	0.0474	17.7627	0.4286
R2, lb/year	146.7300	798.6434	17.3120	6483.3763	156.4317
R2, ton/yr	0.0734	0.3993	0.0087	3.2417	0.0782

Note: NOx and CO emission factors based on 30 and 400 PPMv, respectively, @ 3% O2, per manufacturer's data (as stated by the applicant in 5-6-2014 information letter)

E. THIMBLE HOOD RTO EMISSIONS FROM NATURAL GAS COMBUSTION

A/N	562498	HOURS/DAY:	24.00	
		DAYS/WEEK:	7.00	RTO For Cupola Furnace Thimble Hoods
	OPERATING SCHED:	WEEKS/YEAR:	52.00	
	(DAILY AND ANNUAL)	DAYS/YEAR:	365.00	

Max Firing Rate:	4.60000	(MMbtu/hr)
Usage factor:	1.00000	(max PTE)
Ave Firing Rate:	4.60000	(MMbtu/hr)

APCS EFFICIENCY

ROG	NOx	SOx	CO	PM10
0.00	0.00	0.00	0.00	0.00

FIRING RATE (MMbtu/hr)	EMISSION TYPE	FACTOR (LB/MMbtu)	R1 EMIS. (LBS/HR)	R2 EMIS. (LBS/HR)
4.60000	ROG	0.0067	0.03082	0.03082
4.60000	NOx	0.0365	0.16775	0.16775
4.60000	SOx	0.0008	0.00364	0.00364
4.60000	CO	0.2960	1.36181	1.36181
4.60000	PM10	0.0071	0.03286	0.03286

EMISSIONS SUMMARY

	ROG	NOx	SOx	CO	PM10
R1, lb/hr	0.0308	0.1678	0.0036	1.3618	0.0329
R1, lb/day	0.7397	4.0260	0.0873	32.6833	0.7886
R2, lb/hr	0.0308	0.1678	0.0036	1.3618	0.0329
R2, lb/day	0.7397	4.0260	0.0873	32.6833	0.7886
R2, lb/day (30 day average)	0.7397	4.0260	0.0873	32.6833	0.7886
R2, lb/year	269.9832	1469.5039	31.8540	11929.4123	287.8343
R2, ton/yr	0.1350	0.7348	0.0159	5.9647	0.1439

Note: NOx and CO emission factors based on 30 and 400 PPMv, respectively, @ 3% O2, per manufacturer's data (as stated by the applicant in 5-6-2014 i nformation letter)

3. AFTERBURNER EMISSIONS SUMMARY

A/N 562498 HOURS/DAY: 24.00 Afterburner in APCS 2
DAYS/WEEK: 7.00
WEEKS/YEAR
OPERATING SCHED: : 52.00
(DAILY AND ANNUAL) DAYS/YEAR: 365.00

Max Firing Rate: 10.00000 (MMbtu/hr)
Usage factor: 1.00000 (max PTE)
Ave Firing Rate: 10.00000 (MMbtu/hr)

APCS EFFICIENCY

ROG	NOx	SOx	CO	PM10
99.00	0.00	99.00	99.00	98.00

FIRING RATE (MMbtu/hr)	EMISSION TYPE	FACTOR (LB/MMbtu)	R1 EMIS. (LBS/HR)	R2 EMIS. (LBS/HR)
10.00000	ROG	0.0067	0.06700	0.00067
10.00000	NOx	0.1238	1.23800	1.23800
10.00000	SOx	0.0008	0.00800	0.00008
10.00000	CO	0.0333	0.33300	0.00333
10.00000	PM10	0.0071	0.07100	0.00142

EMISSIONS SUMMARY

	ROG	NOx	SOx	CO	PM10
R1, lb/hr	0.0670	1.2380	0.0080	0.3330	0.0710
R1, lb/day	1.6080	29.7120	0.1920	7.9920	1.7040
R2, lb/hr	0.0007	1.2380	0.0001	0.0033	0.0014
R2, lb/day	0.0161	29.7120	0.0019	0.0799	0.0341
R2, lb/day (30 day average)	0.0161	29.7120	0.0019	0.0799	0.0341
R2, lb/year	5.8692	10844.8800	0.7008	29.1708	12.4392
R2, ton/yr	0.0029	5.4224	0.0004	0.0146	0.0062

4. VERIFICATION OF BLOWER CAPACITIES AND HORSEPOWER REQUIREMENTS FOR MODIFIED APC SYSTEMS

W = (5.202*V*P)/(33000*E)

where: V = ACFM
P = in. W.C.
W = Shaft Horspower
E = blower efficiency factor 0 < E < 1
(Assume E typical = 0.65) 65% power efficiency

	Device Fan SP, in. W.C.	ACFM	Motor HP
Reverb BH	56.00 Assumed	27,000 Applicant's Data	450 Applicant 's Data
Cupola BH 1	55.79 Applicant's Data	32,500 Applicant's Data	450 Applicant's Data
Cupola BH 2	54.42 Applicant's Data	32,500 Applicant's Data	450 Applicant's Data
Dryer RTO	26.00 Applicant's Data	15,200 Applicant's Data	100 Applicant's Data
Cupola RTO	26.00 Applicant's Data	25,000 Applicant's Data	200 Applicant's Data

Calculations
W = (5.202*V*P)/(33000*E)

Device	V	P	E	W	Motor HP Proposed	Adequate
Reverb BH	27,000	56.00	0.65	367	450	YES
Cupola BH 1	32,500	55.79	0.65	440	450	YES
Cupola BH 2	32,500	54.42	0.65	429	450	YES
Dryer RTO	15,200	26.00	0.65	96	100	YES
Cupola RTO	25,000	26.00	0.65	158	200	YES

The horsepower recommended requirements are preliminary and may be amended at the processing of the P/O, based on final design parameters.

5. EMISSIONS SUMMARY FOR POT FURNACES

Max hourly emissions

Current A/N	Previous A/N	C/O A/N	Previous A/N	Kettle No.	ROG, R1 = R2	NOx, R1 = R2	SOx, R1 = R2	CO, R1 = R2	PM10 R1	PM10 R2
562499	533208	496421	374211	4	0.0088	0.7854	0.06	0.0413	0.7417	0.0148
562502	533206	496438	374208	2	0.0088	0.7854	0.8933	0.0413	0.7417	0.0148
562504	533207	496420	374210	3	0.0088	0.7854	0.06	0.0413	0.7417	0.0148
562505	533209	496423	374212	5	0.0088	0.7854	0.06	0.0413	0.3983	0.008
562506	N/A	496426	374214	6	0.0088	0.7854	0.8933	0.0413	1.7588	0.0352
562507	N/A	496428	374215	7	0.0088	0.7854	0.8933	0.0413	1.7588	0.0352
562508	N/A	496429	374216	8	0.0088	0.7854	0.8933	0.0413	1.7588	0.0352
562509	N/A	496432	374217	9	0.0088	0.7854	0.8933	0.0413	1.7588	0.0352
562510	533210	496424	374199	A	0.0088	0.7854	0.06	0.0413	1.6717	0.0334
562511	533211	496425	374200	B	0.0088	0.7854	0.06	0.0413	1.6717	0.0334
562512	533213	496434	374201	E	0.0088	0.7854	0.06	0.0413	2.3421	0.0468
562513	533214	496435	374202	F	0.0088	0.7854	0.06	0.0413	2.3421	0.0468
562514	533215	496433	374204	G	0.0088	0.7854	0.06	0.0413	2.3421	0.0468
562515	533205	496437	374206	1	0.0088	0.7854	0.8933	0.0413	0.7417	0.0148
Totals, lbs/hr					**0.12**	**11.00**	**5.84**	**0.58**	**20.77**	**0.42**
Totals, lbs/day					**2.94**	**263.89**	**140.16**	**13.86**	**498.47**	**9.96**

EMISSIONS SUMMARY FOR POT FURNACES (cont.)

Max daily emissions

Current A/N	Previous A/N	C/O A/N	Previous A/N	Kettle No.	ROG R1 = R2	NOx R1 = R2	SOx R1 = R2	CO R1 = R2	PM10 R1	PM10 R2
562499	533208	496421	374211	4	0.21	18.85	1.44	0.99	17.8	0.36
562502	533206	496438	374208	2	0.21	18.85	21.44	0.99	17.8	0.36
562504	533207	496420	374210	3	0.21	18.85	1.44	0.99	17.8	0.36
562505	533209	496423	374212	5	0.21	18.85	1.44	0.99	9.56	0.19
562506	N/A	496426	374214	6	0.21	18.85	21.44	0.99	42.21	0.84
562507	N/A	496428	374215	7	0.21	18.85	21.44	0.99	42.21	0.84
562508	N/A	496429	374216	8	0.21	18.85	21.44	0.99	42.21	0.84
562509	N/A	496432	374217	9	0.21	18.85	21.44	0.99	42.21	0.84
562510	533210	496424	374199	A	0.21	18.85	1.44	0.99	40.12	0.8
562511	533211	496425	374200	B	0.21	18.85	1.44	0.99	40.12	0.8
562512	533213	496434	374201	E	0.21	18.85	1.44	0.99	56.21	1.12
562513	533214	496435	374202	F	0.21	18.85	1.44	0.99	56.21	1.12
562514	533215	496433	374204	G	0.21	18.85	1.44	0.99	56.21	1.12
562515	533205	496437	374206	1	0.21	18.85	21.44	0.99	17.8	0.36
Totals, lbs/day					**2.94**	**263.89**	**140.16**	**13.86**	**498.47**	**9.96**
Total, lbs/day 30 day Ave.					**3**	**264**	**140**	**14**	**498**	**10**

EMISSIONS SUMMARY FOR POT FURNACES (cont.)

30 day ave. Emissions, lbs/day (math rounding corrected for data entry)

Current A/N	Previous A/N	C/O A/N	Previous A/N	Kettle No.	ROG, R1 = R2	NOx, R1 = R2	SOx, R1 = R2	CO, R1 = R2	PM10 R2
562499	533208	496421	374211	4	0	19	2	1	0
562502	533206	496438	374208	2	0	19	22	1	0
562504	533207	496420	374210	3	0	19	1	1	0
562505	533209	496423	374212	5	1	19	1	1	0
562506	N/A	496426	374214	6	0	18	21	1	1
562507	N/A	496428	374215	7	0	19	22	1	1
562508	N/A	496429	374216	8	0	18	21	1	1
562509	N/A	496432	374217	9	1	19	22	1	1
562510	533210	496424	374199	A	0	19	1	1	1
562511	533211	496425	374200	B	0	19	2	1	1
562512	533213	496434	374201	E	0	19	1	1	1
562513	533214	496435	374202	F	0	19	2	1	1
562514	533215	496433	374204	G	1	19	1	1	1
562515	533205	496437	374206	1	0	19	21	1	1
Total, lbs/day 30 day Ave.					**3**	**264**	**140**	**14**	**10**

EMISSIONS SUMMARY FOR POT FURNACES (cont.)

Max annual emissions, lbs/yr

Current A/N	Previous A/N	C/O A/N	Previous A/N	Kettle No.	ROG R1 = R2	NOx R1 = R2	SOx R1 = R2	CO R1 = R2	PM10 R2
562499	533208	496421	374211	4	76.65	6879.95	525.6	361.35	129.94
562502	533206	496438	374208	2	76.65	6879.95	7825.6	361.35	129.94
562504	533207	496420	374210	3	76.65	6879.95	525.6	361.35	129.94
562505	533209	496423	374212	5	76.65	6879.95	525.6	361.35	69.79
562506	N/A	496426	374214	6	76.65	6879.95	7825.6	361.35	308.13
562507	N/A	496428	374215	7	76.65	6879.95	7825.6	361.35	308.13
562508	N/A	496429	374216	8	76.65	6879.95	7825.6	361.35	308.13
562509	N/A	496432	374217	9	76.65	6879.95	7825.6	361.35	308.13
562510	533210	496424	374199	A	76.65	6879.95	525.6	361.35	292.88
562511	533211	496425	374200	B	76.65	6879.95	525.6	361.35	292.88
562512	533213	496434	374201	E	76.65	6879.95	525.6	361.35	410.33
562513	533214	496435	374202	F	76.65	6879.95	525.6	361.35	410.33
562514	533215	496433	374204	G	76.65	6879.95	525.6	361.35	410.33
562515	533205	496437	374206	1	76.65	6879.95	7825.6	361.35	129.94
Totals lbs/yr					**1073.10**	**96319.24**	**51158.40**	**5058.90**	**3638.83**

6. EMISSIONS SUMMARY FOR REVERB, DRYER, AND CUPOLA FURNACES

A. Summary of final hourly uncontrolled emissions (R1, lbs/hr):

CONTAMINANT	CUPOLA	REVERB	DRYER	REVERB + DRYER
UNROG	4.9000	0.0446	0.0000	0.0446
ROG	26.4000	0.0467	0.0560	0.1030
NOx	1.0400	6.0000	0.9920	6.9900
SOx	24.3000	59.9000	0.1010	60.0000
CO	1250.0000	3.2800	0.2640	3.5400
PM10	32.1000	795.0000	70.4000	866.0000
TOG	31.3000	0.0913	0.0560	0.1470

B. Summary of final hourly controlled emissions (R2 , lbs/hr):

CONTAMINANT	CUPOLA	REVERB	DRYER	REVERB + DRYER
UNROG	0.0798	0.0446	0.0000	0.0446
ROG	0.4300	0.0467	0.0560	0.1030
NOx	1.0400	6.0000	0.9920	6.9900
SOx	0.1950	0.4790	0.1010	0.5800
CO	11.7000	3.2800	0.2640	3.5400
PM10	0.4200	1.0300	0.0721	1.1100
TOG	0.5100	0.0913	0.0560	0.1470

C. Summary of uncontrolled emissions (R1, lbs/day)

CONTAMINANT	CUPOLA	REVERB	DRYER	REVERB + DRYER
UNROG	118.00	1.07	0.00	1.07
ROG	633.00	1.12	1.34	2.46
NOx	24.90	144.00	23.80	168.00
SOx	584.00	1440.00	2.41	1440.00
CO	29900.00	78.70	6.34	85.00
PM10	770.00	19100.00	1690.00	20800.00
TOG	751.00	2.19	1.34	3.54

D. Summary of controlled emissions (R2, LBS/DAY)

CONTAMINANT	CUPOLA	REVERB	DRYER	REVERB + DRYER
UNROG	1.92	1.07	0.00	1.07
ROG	10.30	1.12	1.34	2.46
NOx	24.90	144.00	23.80	168.00
SOx	4.67	11.50	2.41	13.90
CO	281.00	78.70	6.34	85.00
PM10	10.10	24.80	1.73	26.50
TOG	12.20	2.19	1.34	3.54

7. GREENHOUSE GAS EMISSIONS

A. Applicant's Data:

SMELTING PRODUCTION REPORT ***Date 8/25/2013***

Supervisor	Marshall
1st Shift 5am to 5pm 12hrs.	

Supervisor	Joe
2nd. Shift 5pm to 5am 12hrs.	

TOTALIZER	391661.6
OXYGEN	0
Charge	313.00
Reverb Bullion	230
Slag, Tons	83
Coke, Tons	3
Coke & Rubber	13.42
Lead/Slag	2.8
% Recovery	73%

24 hr. REVERB FURNACE REPORT

FIRST SHIFT

START	0
FINISH	152.0
CHARGED	152
SLAG	38
Production	110

SECOND SHIFT

START	152.0
FINISH	313.0
CHARGE	161
SLAG	45
Production	120

EXIDE TECHNOLOGIES Product Summary for 8/25/2013

ID	Product Name	Charges	Weight
2	REVERB SLAG	45	87365 lbs
7	DROSS	90	174665 lbs
1	COKE	45	15025 lbs
3	LIMEROCK	45	2120 lbs
8	CAST IRON	45	24300 lbs
		270	303475 lbs

151.7

B. Assumptions

Pot Coke Usage = 12.8 lbs/ton reverb feed

Exide pot coke = 439.2 tons reverb feed/day x 1 day/24 hrs x 12.8 lb/ton x 1/14 pots = 16.7 lbs/pot*hr = 0.00837 tons/pot*hr

For 8/25/2013, the process data log (CP2 report) for the cupola furnace indicated the following coke charge rates:

FOR CUPOLA FURNACE:
PWcoke = 15,025 lbs/22.62 hours = 664.2 lbs/hr
PWtotal = 151.7 tons/day.
PWcoke max = 664.2 lbs/hr x (178.32 tons/151.7 tons) x (1 ton/2000 lbs) = 0.39 tons/hr
(PW permit limit = 178.32 tons/day)

FOR REVERB FURNACE:
PWcoke = 16.42 tons/day
PWtotal = 313.6 tons/day.
PWcoke max = (439.2 tons/313.6 tons) x (16.42 tons/day) x (1/24) = 0.96 tons/hr
(PW permit limit = 439.2 tons/day)

(cont.)

7. GREENHOUSE GAS EMISSIONS
(cont.)

SUMMARY OF UNCONTROLLED AND CONTROLLED EMISSION FACTORS FOR THE ROTARY DRYER, CUPOLA AND REVERB FURNACES

(Pre-1994 Data)	UNCONTROLLED EMISSION FACTORS			CONTROLLED EMISSION FACTORS		
CONTAMINANT	CUPOLA R1, LBS/TON	REVERB R1, LBS/TON	DRYER R1, LBS/TON	CUPOLA R2, LBS/TON	REVERB R2, LBS/TON	DRYER R2, LBS/TON
UNROG	0.659	0.002	0.000	0.011	0.002	0.000
ROG	3.550	0.003	0.007	0.058	0.003	0.007
NOx	0.140	0.200	0.124	0.140	0.200	0.124
SOx	3.273	3.273	0.005	0.026	0.026	0.005
CO	167.655	0.179	0.033	1.576	0.179	0.033
PM10	4.319	43.465	3.848	0.057	0.057	0.004
TOG	4.209	0.005	0.007	0.069	0.005	0.007

Note1: ROG, NOx, and CO for dryer is natural gas factor from Form B1 in lbs/mmbtu.
Note2: NOx for reverb is lbs/mmbtu.

Scrubber CO2 factor:

Reverb SO2 (R1) max = 439.2 tons/day x 1 day/24 hrs x 3.273 lbs/ton = 59.9 lbs/hr

Cupola SO2 (R1) max = 178.32 tons/day x 1 day/24 hrs x 3.273 lbs/ton = 24.3 lbs/hr

GHG EMISSION CALCULATIONS

CURRENT A/N	PREVIOUS A/N	PREVIOUS P/O	DEVICE	PROCESS RATES	CO2 EF	UNITS	N2O EF	UNITS	CH4 EF	UNITS	CO2 LBS/HR	CH4 LBS/HR	N2O LBS/HR
559499	520501	G20771	RD APCS RTO										
			NAT'L GAS MMBTU/HR	2.5	116.98	lbs/MM Btu	0.0002	lbs/MMBtu	0.0022	lbs/MMBtu	292.45	0.00	0.01
								FINAL	559499	TOTALS	292.45	0.00	0.01
562498	374180	G12582	APCS 2 TO/RTO										
			NAT'L GAS MMBTU/HR	10	116.98	lbs/MM Btu	0.0002	lbs/MMBtu	0.0022	lbs/MMBtu	1169.80	0.00	0.02
			SCRUBBER SO2, R1 LBS/HR	24.3	0.687	lb CO2/lb SO2		NA		NA	16.69	0.00	0.00
								BASELINE	562498	TOTALS	1186.49	0.00	0.02

SOUTH COAST AIR QUALITY MANAGEMENT DISTRICT

APPL. NO see pp. 1-25 | DATE 10-15-2014

ENGINEERING AND COMPLIANCE

PROCESSED BY | CHECKED BY MAP

APPLICATION PROCESSING AND CALCULATIONS

CURRENT A/N	PREVIOUS A/N	PREVIOUS P/O	DEVICE	PROCESS RATES	CO2 EF	UNITS	N2O EF	UNITS	CH4 EF	UNITS	CO2 LBS/HR	CH4 LBS/HR	N2O LBS/HR
562498	374180	G12582	**APCS 2 TO/RTO**										
			NAT'L GAS MMBTU/HR	14.6	116.98	lbs/MM Btu	0.0002	lbs/MMBtu	0.0022	lbs/MMBtu	1707.91	0.00	0.03
			SCRUBBER SO2, R1 LBS/HR	24.3	0.687	lb CO2/lb SO2		NA		NA	16.69	0.00	0.00
								FINAL	**562498**	**TOTALS**	**1724.60**	**0.00**	**0.03**
								NET CHANGE	**562498**	**TOTALS**	**538.11**	**0.00**	**0.01**
562499	533208	G20776	POT 4										
			NAT'L GAS MMBTU/HR	2.5	116.98	lbs/MM Btu	0.0002	lbs/MMBtu	0.0022	lbs/MMBtu	292.45	0.00	0.01
			PETROLEUM COKE, TONS/HR	0.00837	6772.59	lbs/ton	0.2780	lbs/ton	2.1160	lbs/ton	56.69	0.00	0.02
									562499	**TOTALS**	**349.14**	**0.00**	**0.02**
562501	554906	PC	CUPOLA										
			NAT'L GAS MMBTU/HR	4.0	116.98	lbs/MM Btu	0.0002	lbs/MMBtu	0.0022	lbs/MMBtu	467.92	0.00	0.01
			PETROLEUM COKE, TONS/HR	0.39	6772.59	lbs/ton	0.2780	lbs/ton	2.1160	lbs/ton	2641.31	0.11	0.83
									562501	**TOTALS**	**3109.23**	**0.11**	**0.83**
562502	533206	G20774	POT 2										
			NAT'L GAS MMBTU/HR	2.5	116.98	lbs/MM Btu	0.0002	lbs/MMBtu	0.0022	lbs/MMBtu	292.45	0.00	0.01
			PETROLEUM COKE, TONS/HR	0.00837	6772.59	lbs/ton	0.2780	lbs/ton	2.1160	lbs/ton	56.69	0.00	0.02
									562502	**TOTALS**	**349.14**	**0.00**	**0.02**
562503	374231	F36714	APCS 1										
			NAT'L GAS MMBTU/HR	0	116.98	lbs/MM Btu	0.0002	lbs/MMBtu	0.0022	lbs/MMBtu	0.00	0.00	0.00
			PETROLEUM COKE, TONS/HR	0	6773.00	lbs/ton	0.2780	lbs/ton	2.1160	lbs/ton	0.00	0.00	0.00
			SCRUBBER SO2, R1 LBS/HR	59.9	0.687	lb CO2/lb SO2		NA		NA	41.15	0.00	0.00
									562503	**TOTALS**	**41.15**	**0.00**	**0.00**
562504	533207	G20775	POT 3										
			NAT'L GAS MMBTU/HR	2.5	116.98	lbs/MM Btu	0.0002	lbs/MMBtu	0.0022	lbs/MMBtu	292.45	0.00	0.01
			PETROLEUM COKE, TONS/HR	0.00837	6772.59	lbs/ton	0.2780	lbs/ton	2.1160	lbs/ton	56.69	0.00	0.02
									562504	**TOTALS**	**349.14**	**0.00**	**0.02**
562505	533209	G20777	POT 5										
			NAT'L GAS MMBTU/HR	2.5	116.98	lbs/MM Btu	0.0002	lbs/MMBtu	0.0022	lbs/MMBtu	292.45	0.00	0.01
			PETROLEUM COKE, TONS/HR	0.00837	6772.59	lbs/ton	0.2780	lbs/ton	2.1160	lbs/ton	56.69	0.00	0.02
									562505	**TOTALS**	**349.14**	**0.00**	**0.02**
562506	496426	G14028	POT 6										
			NAT'L GAS MMBTU/HR	2.5	116.98	lbs/MM Btu	0.0002	lbs/MMBtu	0.0022	lbs/MMBtu	292.45	0.00	0.01
			PETROLEUM COKE, TONS/HR	0.00837	6772.59	lbs/ton	0.2780	lbs/ton	2.1160	lbs/ton	56.69	0.00	0.02
									562506	**TOTALS**	**349.14**	**0.00**	**0.02**

SOUTH COAST AIR QUALITY MANAGEMENT DISTRICT

APPL. NO see pp. 1-25 | DATE 10-15-2014

ENGINEERING AND COMPLIANCE

APPLICATION PROCESSING AND CALCULATIONS

PROCESSED BY | CHECKED BY MAP

CURRENT A/N	PREVIOUS A/N	PREVIOUS P/O	DEVICE	PROCESS RATES	CO2 EF	UNITS	N2O EF	UNITS	CH4 EF	UNITS	CO2 LBS/HR	CH4 LBS/HR	N2O LBS/HR
562507	496428	G14029	POT 7										
			NAT'L GAS MMBTU/HR	2.5	116.98	lbs/MM Btu	0.0002	lbs/MMBtu	0.0022	lbs/MMBtu	292.45	0.00	0.01
			PETROLEUM COKE, TONS/HR	0.00837	6772.59	lbs/ton	0.2780	lbs/ton	2.1160	lbs/ton	56.69	0.00	0.02
									562507	**TOTALS**	**349.14**	**0.00**	**0.02**
562508	496429	G14030	POT 8										
			NAT'L GAS MMBTU/HR	2.5	116.98	lbs/MM Btu	0.0002	lbs/MMBtu	0.0022	lbs/MMBtu	292.45	0.00	0.01
			PETROLEUM COKE, TONS/HR	0.00837	6772.59	lbs/ton	0.2780	lbs/ton	2.1160	lbs/ton	56.69	0.00	0.02
									562508	**TOTALS**	**349.14**	**0.00**	**0.02**
562509	496432	G14031	POT 9										
			NAT'L GAS MMBTU/HR	2.5	116.98	lbs/MM Btu	0.0002	lbs/MMBtu	0.0022	lbs/MMBtu	292.45	0.00	0.01
			PETROLEUM COKE, TONS/HR	0.00837	6772.59	lbs/ton	0.2780	lbs/ton	2.1160	lbs/ton	56.69	0.00	0.02
									562509	**TOTALS**	**349.14**	**0.00**	**0.02**
562510	533210	G20778	POT A										
			NAT'L GAS MMBTU/HR	2.5	116.98	lbs/MM Btu	0.0002	lbs/MMBtu	0.0022	lbs/MMBtu	292.45	0.00	0.01
			PETROLEUM COKE, TONS/HR	0.00837	6772.59	lbs/ton	0.2780	lbs/ton	2.1160	lbs/ton	56.69	0.00	0.02
									562510	**TOTALS**	**349.14**	**0.00**	**0.02**
562511	533211	G20779	POT B										
			NAT'L GAS MMBTU/HR	2.5	116.98	lbs/MM Btu	0.0002	lbs/MMBtu	0.0022	lbs/MMBtu	292.45	0.00	0.01
			PETROLEUM COKE, TONS/HR	0.00837	6772.59	lbs/ton	0.2780	lbs/ton	2.1160	lbs/ton	56.69	0.00	0.02
									562511	**TOTALS**	**349.14**	**0.00**	**0.02**
562512	533213	G20780	POT E										
			NAT'L GAS MMBTU/HR	2.5	116.98	lbs/MM Btu	0.0002	lbs/MMBtu	0.0022	lbs/MMBtu	292.45	0.00	0.01
			PETROLEUM COKE, TONS/HR	0.00837	6772.59	lbs/ton	0.2780	lbs/ton	2.1160	lbs/ton	56.69	0.00	0.02
									562512	**TOTALS**	**349.14**	**0.00**	**0.02**
562513	533214	G20781	POT F										
			NAT'L GAS MMBTU/HR	2.5	116.98	lbs/MM Btu	0.0002	lbs/MMBtu	0.0022	lbs/MMBtu	292.45	0.00	0.01
			PETROLEUM COKE, TONS/HR	0.00837	6772.59	lbs/ton	0.2780	lbs/ton	2.1160	lbs/ton	56.69	0.00	0.02
									562513	**TOTALS**	**349.14**	**0.00**	**0.02**
562514	533215	G20782	POT G										
			NAT'L GAS MMBTU/HR	2.5	116.98	lbs/MM Btu	0.0002	lbs/MMBtu	0.0022	lbs/MMBtu	292.45	0.00	0.01
			PETROLEUM COKE, TONS/HR	0.00837	6772.59	lbs/ton	0.2780	lbs/ton	2.1160	lbs/ton	56.69	0.00	0.02
									562514	**TOTALS**	**349.14**	**0.00**	**0.02**

SOUTH COAST AIR QUALITY MANAGEMENT DISTRICT

APPL. NO see pp. 1-25 | DATE 10-15-2014

ENGINEERING AND COMPLIANCE

APPLICATION PROCESSING AND CALCULATIONS

PROCESSED BY | CHECKED BY MAP

CURRENT A/N	PREVIOUS A/N	PREVIOUS P/O	DEVICE	PROCESS RATES	CO2 EF	UNITS	N2O EF	UNITS	CH4 EF	UNITS	CO2 LBS/HR	CH4 LBS/HR	N2O LBS/HR
562515	533205	G20773	POT 1										
			NAT'L GAS MMBTU/HR	2.5	116.98	lbs/MM Btu	0.0002	lbs/MMBtu	0.0022	lbs/MMBtu	292.45	0.00	0.01
			PETROLEUM COKE, TONS/HR	0.00837	6772.59	lbs/ton	0.2780	lbs/ton	2.1160	lbs/ton	56.69	0.00	0.02
									562515	**TOTALS**	**349.14**	**0.00**	**0.02**
564346	559500	PC	Reverb										
			NAT'L GAS MMBTU/HR	38.0	116.98	lbs/MM Btu	0.0002	lbs/MMBtu	0.0022	lbs/MMBtu	4445.24	0.01	0.08
			PETROLEUM COKE, TONS/HR	0.96000	6772.59	lbs/ton	0.2780	lbs/ton	2.1160	lbs/ton	6501.69	0.27	2.03
									564346	**TOTALS**	**10946.93**	**0.27**	**2.11**

GHG EMISSION SUMMARY			MAX PTE						MAX PTE		
CURRENT A/N	DEVICE	STATUS	CO2 LBS/HR	CH4 LBS/HR	N2O LBS/HR	CO2 CO_2e Factor	CH4 CO_2e Factor	N2O CO_2e Factor	CO2 LBS/HR	CH4 CO_2e LBS/HR	N2O CO_2e LBS/HR
559499	RD APCS RTO	FINAL	**292.45**	**0.0005**	**0.0055**	1	25	298	**292.45**	**0.01**	**1.64**
562498	APCS 2 TO/RTO	BASELINE	1,186.49	0.0020	0.0220	1	25	298	1,186.49	0.05	6.56
562498	APCS 2 TO/RTO	FINAL	1,724.60	0.0029	0.0321	1	25	298	1,724.60	0.07	9.57
562498	APCS 2 TO/RTO	**NET CHANGE**	**538.11**	**0.0009**	**0.0101**	1	25	298	**538.11**	**0.02**	**3.02**
562499	POT 4	FINAL	349.14	0.0028	0.0232	1	25	298	349.14	0.07	6.92
562501	CUPOLA	FINAL	3,109.23	0.1092	0.8340	1	25	298	3,109.23	2.73	248.54
562502	POT 2	FINAL	349.14	0.0028	0.0232	1	25	298	349.14	0.07	6.92
562503	APCS 1	FINAL	41.15	0.0000	0.0000	1	25	298	41.15	0.00	0.00
562504	POT 3	FINAL	349.14	0.0028	0.0232	1	25	298	349.14	0.07	6.92
562505	POT 5	FINAL	349.14	0.0028	0.0232	1	25	298	349.14	0.07	6.92
562506	POT 6	FINAL	349.14	0.0028	0.0232	1	25	298	349.14	0.07	6.92
562507	POT 7	FINAL	349.14	0.0028	0.0232	1	25	298	349.14	0.07	6.92
562508	POT 8	FINAL	349.14	0.0028	0.0232	1	25	298	349.14	0.07	6.92
562509	POT 9	FINAL	349.14	0.0028	0.0232	1	25	298	349.14	0.07	6.92
562510	POT A	FINAL	349.14	0.0028	0.0232	1	25	298	349.14	0.07	6.92
562511	POT B	FINAL	349.14	0.0028	0.0232	1	25	298	349.14	0.07	6.92
562512	POT E	FINAL	349.14	0.0028	0.0232	1	25	298	349.14	0.07	6.92
562513	POT F	FINAL	349.14	0.0028	0.0232	1	25	298	349.14	0.07	6.92
562514	POT G	FINAL	349.14	0.0028	0.0232	1	25	298	349.14	0.07	6.92
562515	POT 1	FINAL	349.14	0.0028	0.0232	1	25	298	349.14	0.07	6.92
564346	Reverb	FINAL	10946.93	0.2745	2.1150	1	25	298	10,946.93	6.86	630.26
TOTALS OF FINAL EMISSIONS, LBS/HR:			**21002.27**	**0.4267**	**3.3116**				**21,002.27**	**10.67**	**986.85**
TOTALS OF FINAL EMISSIONS, TONS/YR:			**91989.95**	**1.8689**	**14.5047**				**91,989.95**	**46.72**	**4,322.40**

TOTAL PERMITTED CO_2e, TONS/YR (MAX PTE):	**96,359.07**
TOTAL PROJECT CO_2e NET CHANCE, TONS/YR (MAX PTE):	**3,658.39**
TOTAL PROJECT CO_2e NET CHANCE, METRIC TONS/YR (MAX PTE):	**3,318.82**

EVALUATION

CEQA

In accordance with the California Environmental Quality Act (CEQA), the South Coast Air Quality Management District (SCAQMD) is the Lead Agency a nd has prepared a Draft Supplemental Negative Declaration (ND) for the project identifie d in these permit applications, which tiers off the Final Environmental Assessment (EA) for Propos ed Amended Rule (PAR) 1420.1 - Emission Standards for Lead and Other Toxic Air Contaminants fr om Large Lead-Acid Battery Recycling Facilities (January 2014, SCAQMD No. 131010JK, Sta te Clearinghouse No. 2013101035), which was adopted by the SCAQMD Governing Board on January 10, 2014. The Final EA for Rule 1420.1 evaluated amendments to Rule 1420.1 to ensure attainm ent of the National Ambient Air Quality Standards (NAAQS) for lead and reduc e arsenic, benzene, and 1,3-butadiene emissions.

The Final Environmental Assessment (EA) for Proposed Amended Rule (PAR) 1420.1 - Emission Standards for Lead and Other Toxic Air Contaminants from Large Lead-Acid Battery Recycling Facilities (January 2014, SCAQMD No. 131010JK, State Clearinghouse No. 2013101035) was adopted by the SCAQMD Governing Board on January 10, 2014. The Final EA for PAR 1420.1 evaluated amendments to Rule 1420.1 to ensure attainment of the National Ambient Air Quality Standards (NAAQS) for lead and reduce arsenic, benzene, and 1,3-butadiene emissions. **No significant impacts were identified to any environmental topic in the Final EA.** A Supplemental ND has been prepared because new information about control equipment, which was not known and could not have been known at the time the Final EA for PAR 1420.1 was prepared as identified in air quality permit applications from Exide Technologies. **Based on the analysis of the new information in the Supplemental ND, there would be no change to the significance determinations made in the Final EA for PAR 1420.1.** The proposed project site is not on any of the list enumerated under section 65962.5 of the Government Code (http://www.calepa.ca.gov/sitecleanup/corteselist/SectionA.htm and http://www.calepa.ca.gov/sitecleanup/corteselist/default.htm accessed on July 18, 2014).

A thirty (30) day public notice is required for CEQA purposes. The purpose of this notice is to solicit comments on the environmental analysis contained in the Supplemental ND.

Facility wide permit condition no. F67.1 will ensure compliance with the requirements in the SCAQMD approved Mitigated Negative Declaration for this facility.

RULE 212

The only emissions increases are the Reg XIII exempt emissions from the new RTO's. There are no emission increases large enough to trigger Rule 212 public notification requirements. There are no increases in health risk resulting from the proposed alterations and change of conditions.

Therefore a Rule 212 public notice is not required in this case.

RULE 401

Operation of the subject equipment is not expected to cause visible emissions in excess of the limits in this rule. Therefore, compliance is expected.

RULE 402

Since the process equipment is vented to baghouses and scrubbers at this facility, nuisance complaints due to dust and odors is not expected during normal operation of the subject equipment at this facility.

RULE 404

Previous evaluations have shown compliance with the particulate concentration limits in this rule.

RULE 405

Previous evaluations have shown compliance with the particulate emission limits in this rule.

RULE 407

The cupola furnace is vented to an afterburner and the CO emissions are monitored by a CEMS. Therefore, compliance with the 2000 PPMv 15 minute concentration limit is expected.

The SO_2 emissions from the reverberatory furnace and cupola furnace are vented to scrubbers. Therefore, compliance with the 500 PPMv SO_2 15 minute concentration limit is expected. However, this equipment is exempt from the Rule 407 SO_2 concentration limit because this facility is a RECLAIM facility.

RULE 409

Since the reverb furnace and the rotary dryer are fired on natural gas, and since all process furnaces at this facility are vented to baghouses, compliance with the combustion particulate concentration limit in this rule is expected.

REGULATION XIII

There are no emission increases resulting from these applications. Therefore, emission offsets are not required.

The afterburner temperature limits will ensure compliance with Beast Available Control Technology (BACT) requirements for ROG control.

RULE 1401

There are no emission increases resulting from this set of applications, therefore, no Health Risk Assessment for Rule 1401 purposes is required.

RULE 1402

The previous emissions from this facility have resulted in an existing cancer risk greater than 25 in a million and a cancer burden greater than 0.5. These risk levels trigger requirements in Rule 1402 for a Risk Reduction Plan (RRP). The required risk reduction must be completed no later than 3 years from the initial date of submittal of the RRP. Additional source tests and the proposed equipment modifications are required in conjunction with the RRP and are expected to bring this facility into compliance with Rule 1402 requirements.

RULE 1407

All APC systems venting emissions from lead metal melting operations at this facility have complied with the 98% control efficiency limit for lead emissions in Rule 1420. Therefore, this equipment is exempt from the performance standard in Rule 1407 per the exemption in subpart (i)(6) of this rule.

Permit conditions will ensure compliance with the instrumentation and housekeeping requirements in this rule.

However, Exide operates some baghouses which exceed the Rule 1407 temperature limit of 360 ^{o}F in (d)(3) of this rule. Therefore, per Rule 1407, the applicant is required to demonstrate that arsenic and cadmium emissions are controlled in these baghouses by at least 99 percent. To demonstrate this, the applicant performed source tests in 1997 for arsenic and cadmium control efficiency in the cupola and reverberatory furnace baghouses. These are the main baghouses at this facility venting metal melting emissions which fall into this high temperature category. The dryer baghouse has a maximum temperature limit of 400 deg F, but operates at an average temperature of 308 deg F (the range is from 250 to 350 deg F, typically.)

In summary, the source tests showed the following results:

Device	Description	Inlet Point Tested	Test Point Inlet Ave Temp, ^{o}F	Baghouse Inlet Ave. Temp, ^{o}F	Compound	Control Eff. %
C40, C41	Reverb furnace baghouses	inlet to balloon flue duct	540	453	Arsenic Cadmium	99.66 99.96
C45	Cupola furnace baghouse	A-pipe inlet to baghouse	789	395	Arsenic Cadmium	99.45 99.82

Baghouses with inlet temperatures greater than 360 °F (current permit limits are 500 °F for cupola and reverb furnace baghouses) are expected to comply with a 99% control efficiency requirement in Rule 1407 for arsenic and cadmium emissions based on source test data performed on the cupola and reverb furnace baghouses. Based on all arsenic, cadmium, and/or lead control efficiency tests performed so far, Exide has demonstrated compliance with arsenic and cadmium efficiency requirements in Rule 1407.

Since the baghouse and scrubber systems are being enhanced and redesigned, new source tests are required to demonstrate that the new systems can operate in compliance with these same requirements. Permit conditions will ensure compliance with the source test requirements.

RULE 1420

Previous source tests have demonstrated that all APCS equipment at this facility has at least 98% control efficiency on lead emissions. The addition of the HEPA filters will further reduce lead emissions.

RULE 1420.1

Exide has had previous periodic violations of the 0.15 ug/m^3 lead concentration standard (30 day average) in this rule, and several Notice of Violations have been issued to Exide by the SCAQMD as a result of these violations. Maintenance activities were usually suspected as the cause. Mitigation measures have been put into practice subsequent to the exceedances. There are no current ongoing violations and this facility is currently in compliance with presently applicable requirements in this rule as of the date of this report.

RULE 2011

In RECLAIM, concentration limits are allowed for large sources. This rule does not contain a category for "large" SOx sources. Therefore, the existing concentration limit for SOx for the reverberatory and cupola furnaces in previous versions of the RECLAIM permit needs to be replaced with either a designation for SOx process units or SOx Major Sources.

It is impractical to classify a lead smelting furnace as a SOx process unit due to the requirement for a fixed emission factor in RECLAIM, and due to the fact that the SOx emission profiles from lead smelting furnaces are highly variable in nature. Since Exide already has a CO and NOx CEMS on the common scrubber stack, the most practical and reliable solution to this problem is to change the two smelting furnace permit unit classifications to Major SOx sources. For this reason, a SOx CEMS will be required by new permit conditions.

REGULATION 30, TITLE V

Since the proposed project will result in the addition of a new device subject to lead NESHAP requirements, this revision is considered to be a Title V significant permit revision. A 30 day public notice and a 45 day EPA notice is required.

40CFR60 Subpart L (Standards of Performance For Secondary Lead Smelters)

This performance standard limits the particulate matter concentration from the reverberatory furnace to 50 mg/dscm (0.022 grains/dscf), visible emissions from the reverberatory furnace to no more than 20 percent opacity, and visible emissions from pot furnaces to no more than 10 percent opacity.

Previous source tests on this equipment have demonstrated compliance with the reverberatory furnace particulate concentration limit.

The subject equipment is not expected to release visible emissions into the open atmosphere because it is installed in a total enclosure building maintained under negative pressure (in compliance with 40CFR63 Subpart X), the building is vented to baghouses and dust collectors, and the process gases from the furnaces are vented to air pollution control equipment equipped with baghouses and venturi scrubbers.

Therefore, compliance with the requirements of this rule is expected.

40CFR63 Subpart X (LEAD NESHAP)

The total enclosure buildings at this facility are equipped with negative pressure differential gauges to ensure compliance with the total enclosure negative pressure requirements in this rule. The APC systems have been previously tested and found to be in compliance with the lead concentration limits in this rule. Therefore, compliance with the lead NESHAP has been demonstrated.

CAM

CAM requirements pertain to the requirements of 40 CFR 64, Continuous Assurance Monitoring. The CAM rule contains specific federal monitoring requirements for process equipment which is vented by air pollution control systems where the facilities which are major sources, as defined in Title V (Reg 30). Permit conditions currently ensure compliance with CAM requirements. The following APC systems in operation at Exide are subject to CAM requirements. These APC systems have the following conditions associated with them:

APCS	Device ID	REQUIRED CONDITIONS
APCS #1 Reverb furnace baghouse	C40, C41	C6.3, D12.5, D12.6, D12.11, D381.1, E102.1, E193.1, H116.1, H116.2, H116.4, K67.2

APCS	Device ID	REQUIRED CONDITIONS
APCS #2 Blast furnace baghouse	C45	C6.3, D12.5, D12.6, D12.11, D381.1, E102.1, E193.1, H116.1, H116.2, H116.4, K67.2
APCS #5 Hard lead (pot furnace) baghouse	C46	D12.6, D12.7, D12.10, D12.11, D381.1, E102.1, H116.1, H116.2, H116.4, K67.3, E193.1
APCS #6 Soft lead (pot furnace) baghouse	C47	D12.6, D12.7, D12.10, D12.11, D381.1, E102.1, H116.1, H116.2, H116.4, K67.3, E193.1
Rotary dryer baghouse	C144	C6.2, D12.5, D12.6, D381.1, E102.1, E193.1, H116.1, H116.2, H116.4, K67.2
Blast/Reverb Furnace Common Stack Outlet	S139	A63.1, D82.1, D323.1, K67.9

There are seven new control devices being added to this facility as a part of this project. These devices are the rotary dryer RTO (C199), the MAC baghouses' secondary HEPA filters (C200 and C201), the blast furnace venturi scrubber (C202), the blast furnace tray scrubber (C203), the cupola thimble prefilter dust collector (C204), and the cupola thimble RTO (C205). This project is expected to result in emission reductions of all air contaminants.

Based on currently available data, the sources controlled by these devices are not expected to exceed any new Major Source Threshold (MST) triggering the requirement for a new CAM Plan. A screening source test performed on the rotary dryer baghouse outlet in 2010 indicated that the uncontrolled emission rate for VOC's was 1.72 lbs/hr, equal to 7.5 tons/year. This is less than the MST of 10 tons/year for VOC. Therefore, new CAM applicability for the rotary dryer is not triggered based on current available data. New source tests will verify this information.

DISCUSSION

There are no emissions increases expected with regards to the subject permit applications, except for the new natural gas emissions from the two RTO's which are exempt under Reg XIII.

A comprehensive new set of source tests is required following the rebuild and restart of the upgraded Exide facility. Permit conditions will specify the source tests which are required.

Permit conditions and source tests will ensure compliance with all applicable Rules and Regulations.

RECOMMENDATION

Release for 30 day public notice and 45 day EPA review. Upon successful completion of notice periods and public hearings (if required), issue Permit to Construct subject to the following Facility Permit modifications and change of conditions in Section H:

APPLICATION NO. 562500

Approve Title V Facility Permit modification

APPLICATION NOS. 558214, 559498, 559499, 562498, 562499, 562501, 562502, 562503, 562504, 562505, 562506, 562507, 562508, 562509, 562510, 562511, 562512, 562513, 562514, 562515, 564346, 564348

Add new devices, modify device descriptions, add device connections, and add new permit conditions as indicated in the tables under EQUIPMENT DESCRIPTION above for the described Processes and Systems, and transfer to Section H all existing conditions:

(Note: additions and changes are shaded and indicated in ***bold type****)*

FACILITY WIDE CONDITIONS:

NEW
F67.1 THE FACILITY OPERATOR SHALL COMPLY WITH ALL TE RMS AND CONDITIONS SPECIFIED BELOW.

Exide shall comply with all applicable mitigation measures stipulated in the Mitigation Monitoring and Reporting Plan which is part of the SCAQMD approved Mitigated Negative Declaration for this facility.

[CA PRC CEQA, 11-23-1970]

NEW
F67.2 THE FACILITY OPERATOR SHALL COMPLY WITH ALL TE RMS AND CONDITIONS SPECIFIED BELOW.

Exide shall comply with all terms and conditions of the Final Revised Rule 1402 Risk Reduction Plan, upon approval, the Order for Abatement of Hearing Board Case No. 3151-29, and all terms, conditions and mitigation measures identified in the Revised Dust Mitigation Plan which is approved under the Order for Abatement issued under Hearing Board Case No. 3151-32.

[RULE 1402, 3-4-2005; RULE 1420.1, 3-7-2014]

DEVICE CONDITIONS:

NEW
B59.3 The operator shall not use the following material(s) in this device :

Arsenic metal and/or chemical additives containing arsenic compounds.

[RULE 1401, RULE 1402, RULE 1407, RULE 1420.1]

[Devices subject to this condition : D11, D13, D15, D17, D19, D24, D26, D28, D30, D32, D34, D36]

MODIFIED

C8.1 The operator shall use this equipment in such a manner that the temperature being monitored, as indicated below, is not less than 1400 Deg F.

A) For the purpose of this condition, the temperature gauge shall be located at a distance not less than 7'-10" (7 feet and 10 inches) downstream of the burner location in the afterburner combustion chamber.

B) For the purpose of this condition, the temperature gauge may be either a fixed installation, a mechanically retractable installation, and/or a manually retractable installation.

C) The operator shall also install and maintain a device to continuously record the parameter being measured.

D) The measuring device or gauge shall be accurate to within plus or minus 42 degrees Fahrenheit. It shall be calibrated once every 12 months.

E) During operation of the cupola furnace (including startup and shutdown), the temperature readings of the temperature gauge described in this condition shall be recorded continuously.

F) During cold startup of the cupola furnace, the temperature gauge shall indicate at least 1400 Degrees Fahrenheit prior to the initiation of carbon coke and/or furnace feed material charging in the cupola furnace.

G) During shutdown of the cupola furnace, the temperature gauge shall indicate at least 1400 Degrees Fahrenheit until all combustion activity in the cupola furnace has ceased. For the purpose of this condition, combustion activity is defined as burning or smoldering of carbon coke and/or any other organic material in the cupola furnace as evidenced by the presence of incandescent light and visible emissions.

H) This condition applies to requirements for afterburner operation. In addition to these requirements, the other parts of the air pollution control system serving the cupola furnace, including but not limited to, baghouses and scrubbers shall remain in full operation as long as there is the presence of any molten lead or molten slag inside of the cupola furnace.

I) During periods of breakdown or malfunction, the operator shall comply with the breakdown and notification requirements in Rule 430. In addition, when a breakdown or malfunction of this equipment results in an event which results in non-compliance with the temperature limit in this condition, the operator shall file a Title V deviation report in accordance with the provisions of Rule 3004.

[RULE 1303(a)(1)-BACT, 5-10-1996; RULE 1401, 12-7-1990; RULE 407, 4-2-1982]
[Devices subject to this condition : C44]

DELETED
C8.8

(Replaced by enhanced condition C8.1)

NEW
C8.9 The operator shall use this equipment in such a manner that the temp erature being monitored, as indicated below, is not less than 1500 Deg F.

To comply with this condition, the operator shall install and maintain a(n) temperature gauge to accurately indicate the temperature in the regenerative thermal oxidizer (RTO), in degrees Fahrenheit.

Each temperature measuring device shall be equipped with a chart recorder to continuously monitor and record the temperature in the RTO.

Each temperature measuring device shall be accurate to within plus or minus 45 degrees Fahrenheit. Each device shall be calibrated once every 12 months.

[RULE 1303(a)(1)-BACT, RULE 1401, RULE 407]

[Devices subject to this condition: C199, C205]

NEW
C8.10 The operator shall use this equipment in such a manner that the flow rate being monitored, as indicated below, is not less than 800 gpm.

To comply with this condition, the operator shall install and maintain a(n) flow meter to accurately indicate the flow rate in the liquid supply lines to the venturi scrubber and the tray-type scrubber, in gallons per minute.

[RULE 1303(a)(1)-BACT]

[Devices subject to this condition : C202]

NEW
C8.11 The operator shall use this equipment in such a manner that the flow rate being monitored, as indicated below, is not less than 650 gpm.

To comply with this condition, the operator shall install and maintain a(n) flow meter to accurately indicate the flow rate in the liquid supply lines to the tray-type scrubber, in gallons per minute.

[RULE 1303(a)(1)-BACT]

[Devices subject to this condition : C203]

NEW
C8.12 The operator shall use this equipment in such a manner that the pH being monitored, as indicated below, is not less than 6.5 of the pH scale.

To comply with this condition, the operator shall install and maintain a(n) pH meter to accurately indicate the pH in the recirculation tank serving the scrubber.

[RULE 1303(a)(1)-BACT]

[Devices subject to this condition : C202, C203]

NEW
C8.13 The operator shall use this equipment in such a manner that the differential pressure being monitored, as indicated below, is not less than 35 inches water column.

To comply with this condition, the operator shall install and maintain a(n) differential pressure gauge to accurately indicate the differential pressure across the venturi scrubber and the tray-type scrubber, in total inches water column.

[RULE 1303(a)(1)-BACT, RULE 1401]

[Devices subject to this condition : C202, C203]

NEW

D12.20 The operator shall install and maintain a(n) differential pressure gauge to accurately indicate the differential pressure in the furnace, in inches water column.

A. The pressure differential gauge shall be installed, operated, and main tained pursuant to the requirements in condition E448.13.

B. The furnace shall be operated such that static differential furnac e pressure, in inches of water column averaged over 30 minutes, is maintained at a value -0.02 or more negative, except as specified in condition E448.13.

[RULE 1420.1]

[Devices subject to this condition : D119 D128]

MODIFIED

D82.1 The operator shall install and maintain a CEMS to measure the following parame ters:

NOx concentration in PPMv

SOx concentration in PPMv

CO concentration in ppmv

The CEMS will convert the actual NOx**, SOx** and CO concentrations to mass emission rates (lbs/hr) and record the hourly emission rates on a continuous basis.

The CEMS shall be installed and maintained to totalize the exhaust gas flow rate, in dry standard cubic feet.

The SOx emissions in the common cupola and reverb scrubber stack outlet shall be quantified based on a concentration limit for SOx and total exhaust gas flow rate measured by the NOx CEMS**, prior to the installation of the SOx CEMS.**

The SOx concentration limit shall be equal to **1.80** PPMv at actual stack conditions**, prior to the installation of the SOx CEMS**. Concentrations and exhaust gas flow rates **measured by the CEMS** shall be based on dry, standard conditions.

Exide shall submit an application and protocol to certify the SOx CEMS to measure SOx emissions, not later than 60 days following the issue date of this permit.

The concentration limits for the reverberatory and cupola furnaces shall not be used for emission reporting purposes subsequent to the certification of the SOx CEMS.

The source test report for the SOx CEMS certification shall be submitted to the SCAQMD not later than 180 days of initial startup of the new venturi scrubber, tray scrubber, and cupola thimble hood enclosure RTO of device nos. C202, C203 and C205, respectively.

Written results shall be submitted to the SCAQMD within 60 days after testing of the SOx CEMS is complete.

[RULE 2011; RULE 2012**; RULE 407**]

[Devices subject to this condition : S139]

DELETED
Condition D182.6

[RULE 1402, 3-4-2005]
[Devices subject to this condition : D128]

NEW
D182.11 The operator shall test this equipment in accordance with the following specifications:

A. This condition defines specific groups of compounds which shall be tested as stated in D182.x conditions, where applicable, contained in this Facility Permit. (For the purposes of this condition, x is the specific condition number.) Refer to each D182.x condition for specific requirements, where applicable.

B. The tests shall be performed to measure the emissions to the atmosphere at the air pollution control system (APCS) stack outlet of the following compounds while the process equipment is operated at maximum capacity and maximum potential to emit.

C. Tests shall include, but may not be limited to, a test for the following compounds in each air pollutant group:

Group 1: Rule 1407 and 1420.1 Toxic Metals:

Total Arsenic
Total Cadmium
Total Lead

Group 2: Additional Toxic Metals

Total Beryllium
Hexavalent Chromium
Total Cobalt
Total Copper
Total Manganese
Total Mercury
Total Nickel
Total Selenium
Total Vanadium

Group 3: Rule 1420.1 Toxic Organic Compounds

Benzene
1,3-Butadiene

Group 4: Additional Toxic Organic Compounds

Carbon Tetrachloride
Chlorobenzene
Chloroform
1,2-Dibromoethane
1,4-Dichlorobenzene
1,2-Dichloroethane
1,1-Dichloroethene
1,4-Dioxane
Ethylbenzene
Methylene Chloride
Styrene
1,1,2,2,-Tetrachloroethane
Tetrachloroethene
Toluene
1,1,2-Trichloroethane
Trichloroethene
Vinyl Chloride
o-Xylene
m,p-Xylenes
Polychlorinated Dibenzo-p-dioxins (PCDD's)
Polychlorinated Dibenzofurans (PCDF's)
Polychlorinated Biphenyls (PCB's)
Polynuclear Aromatic Hydrocarbons (PAH's)
Hydrogen Sulfide
Formaldehyde

Acetaldehyde

Group 5: RECLAIM Emissions

Oxides of Nitrogen
Oxides of Sulfur

Group 6: Criteria Emissions

Total non-methane hydrocarbons
Carbon Monoxide
Particulate Matter Less Than 10 microns (PM10)

[RULE 404, RULE 405, RULE 407, RULE 409, RULE 1401, RULE 1402, RULE 1407, RULE 1420, RULE 1420.1, RULE 2011, RULE 2012, RULE 1303(a)(1)-BACT, RULE 1303(b)(2)-Offset, 40CFR 60 Subpart L, 40CFR 63, Subpart X]

[Devices subject to this condition: S139, S140, S141, S142, S145, S158, S166, S187, S189]

NEW
D182.12 The operator shall test this equipment in accordance with the following specifications:

A) The test(s) shall be conducted and a written report submitted to the SCAQMD not later than 180 days of initial startup of the regenerative thermal oxidizers (RTO's).

B) Triplicate test(s) shall be performed to measure the emissions to the atmosphere of the compounds listed in air pollutant group numbers 1, 3, 5, and 6 defined in condition D182.11. In addition, the test(s) shall measure the inlet emission rates as required in condition D182.13, to determine if the RTO is performing as expected to meet Rule 1402 and BACT requirements.

C) Tests for NOx and SOx shall be performed pursuant to the protocol requirements in Rules 2012 and 2011, respectively.

D) A source testing plan shall be submitted to the SCAQMD for approval at least 60 days prior to testing. All tests shall be conducted in accordance with the plan as approved.

E) Written notice shall be provided to the SCAQMD at least 10 days prior to testing so that an SCAQMD observer may be present during the tests.

F) The source tests shall be performed by a qualified testing laboratory and conducted in accordance with SCAQMD approved procedures.

G) Sampling facilities shall comply with the SCAQMD "Guidelines For The Construction Of Sampling And Testing Facilities", pursuant to Rule 217.

H) Written results shall be submitted to the SCAQMD within 60 days after testing and shall include the items listed in condition E448.11.

[RULE 404, RULE 405, RULE 407, RULE 409, RULE 1401, RULE 1402, RULE 1407, RULE 1420, RULE 1420.1, RULE 2011, RULE 2012, RULE 1303(a)(1)-BACT, RULE 1303(b)(2)-Offset, 40CFR 63, Subpart X]

[Devices subject to this condition: S145, C199, C205]

NEW

D182.13 The operator shall test this equipment in accordance with the following specifications

A) Triplicate tests shall be performed to measure the emissions at the regenerative thermal oxidizer (RTO) inlets for RTO's installed on the outlet of the rotary dryer HEPA filter and the RTO venting the cupola furnace thimble hood enclosure.

B) The respective tests shall be performed while the rotary dryer furnace and reverberatory furnace are operated at maximum capacity in the case of the rotary dryer RTO and while the cupola furnace is operating at maximum capacity in the case of the cupola furnace thimble enclosure RTO.

C) The tests at the rotary dryer RTO inlet shall be performed simultaneously with the tests for these compounds at the rotary dryer RTO outlet.

D) The tests at the cupola thimble hood enclosure RTO inlet shall be performed simultaneously with the tests for these compounds at the common scrubber stack outlet serving the reverberatory and cupola furnace air pollution control systems.

E) The tests shall include, but may not be limited to, a test for:

1,3-Butadiene
Benzene
Total and non-methane hydrocarbons
Carbon Monoxide

[RULE 1401, 3-4-2005; RULE 1402, 3-4-2005]

[Devices subject to this condition: C199, C205]

NEW
D182.14 The operator shall test this equipment in accordance with the following specifications:

A) The test(s) shall be conducted and a written report submitted to the SCAQMD not later than 180 days of initial startup of the new venturi and tray scrubbers.

B) The source tests shall be performed ONLY after the smoke tests demonstrate complete smoke capture as stated in condition E448.12. Source tests performed without the required initial smoke tests shall be considered non-representative and shall be repeated.

C) Triplicate test(s) shall be performed to measure the emissions to the atmosphere of the compounds listed in air pollutant group numbers 1, 2, 3, 4, 5 and 6 defined in condition D182.11. The tests shall be performed at the outlets of the scrubbers of devices C43 and C203, each.

D) Test(s) shall also be performed to measure the inlet emission rates as required in condition D182.15, to determine if the air pollution control systems are performing as expected to meet Rule 1402, Rule 1407, RULE 1420 and BACT requirements.

E) Pursuant to the Risk Reduction Plan and Rule 1402, Exide is required to conduct source tests upon completion of the upgrades. If the above-referenced source tests are conducted at less than 85 percent of its current permitted charge rate limits for each furnace, within 30 days of approval of those source test results by the District, Exide shall submit a permit application to the District requesting a commensurate reduction in its permitted charge rate limits for the applicable furnaces to charge rates such that the source tested charge rates are equivalent to 85 percent of the proposed permitted charge rates.

F) For the purpose of condition E, the daily process weight limit for each furnace shall be calculated by multiplying the average process weight demonstrated during each set of the three test runs for each furnace, in pounds per hour each, by a factor of 24. The calculated average process weight shall be the average of the process weights in the three test runs. The daily limits calculated this way, in pounds per day, for each furnace, shall be divided by a factor of 2,000 and the limit set in the permit in units of tons per day, respectively, for each furnace.

G) Exide shall ensure that the instantaneous process weights for each furnace are recorded during each test run and the total amounts of process weight charged to each furnace is integrated for the duration of each and every test run.

H) If separate sets of triplicate test runs are required for the quantification of metals, and of any other compounds, the average throughput limits calculated pursuant to this condition shall be based on the test runs where arsenic emissions are measured.

I) Exide shall plan the availability of feed materials in advance prior to each set of source tests in order to ensure compliance with the requirements in this condition.

J) Elemental arsenic additions shall be performed in the pot furnaces vented by the baghouse of device C41 during at least one of the source test runs performed to quantify arsenic emissions.

K) Exide shall prepare and submit a detailed log of the elemental arsenic additions made to each of the lead refining furnaces vented to cupola baghouse 2 (Device C41) during each test run. This special log shall be included as part of the source test report submitted to the SCAQMD.

L) The special log of subpart K of this condition shall record the following information:

Calendar date
Test run number
Test run start and stop time
Pot furnace identification(s)
Chronological time
Pounds of elemental arsenic charged to each pot furnace

M) The source tests for metals shall be performed in accordance with ARB Method 436 - Determination of Multiple Metal Emissions from Stationary Sources.

N) Tests for NOx and SOx shall be performed pursuant to the protocol requirements in Rules 2012 and 2011, respectively.

O) Written notice shall be provided to the SCAQMD at least 7 days prior to testing so that an SCAQMD observer may be present during the tests.

P) Sampling facilities shall comply with the attached SCAQMD "guidelines for the construction of sampling and testing facilities", pursuant to rule 217.

Q) Exide shall ensure that there are enough personnel available during each test run to collect and report all of the required information as noted in conditions A through

N. Written results shall be submitted to the SCAQMD within 60 days after testing is completed.

R) A source testing plan shall be submitted to the SCAQMD for approval at least 60 days prior to testing. All tests shall be conducted in accordance with the plan as approved.

S) Written notice shall be provided to the SCAQMD at least 10 days prior to testing so that an SCAQMD observer may be present during the tests.

T) The source tests shall be performed by a qualified testing laboratory and conducted in accordance with SCAQMD approved procedures.

U) Sampling facilities shall comply with the SCAQMD "Guidelines For The Construction Of Sampling And Testing Facilities", pursuant to Rule 217.

V) Written results shall be submitted to the SCAQMD within 60 days after testing and shall include the items listed in condition E448.11.

[RULE 404, RULE 405, RULE 407, RULE 409, RULE 1401, RULE 1402, RULE 1407, RULE 1420, RULE 1420.1, RULE 2011, RULE 2012, RULE 1303(a)(1)-BACT, RULE 1303(b)(2)-Offset, 40CFR 63, Subpart X]

[Devices subject to this condition: C40, C41, C42, C43, C45, D128, D132, D133, S139]

NEW
D182.15 The operator shall test this equipment in accordance with the following specifications

A. Triplicate tests shall be performed to measure the emissions listed in this condition at the inlets of cupola furnace baghouse no. 1 (device C45), cupola furnace baghouse no. 2 (device C41), and the reverberatory furnace baghouse (device C40).

B. The tests on the inlets of cupola baghouse nos. 1 and 2 (devices C41 and C45) shall be performed simultaneously with the tests for these compounds at the new tray scrubber outlet of device C203, prior to the junction with the common stack outlet of device S139.

C. The tests on the inlet of the reverberatory furnace baghouse (device C40) shall be performed simultaneously with the tests for these compounds at the existing tray scrubber outlet of device C43, prior to the junction with the common stack outlet of device S139.

D. Tests shall include, but may not be limited to, a test for:

Total arsenic
Total cadmium
Total lead

E. The tests shall demonstrate a minimum control efficiency of 99 percent, each, on both total arsenic and total cadmium emissions, pursuant to Rule 1407(d)(3).

F. At least three test runs for oxides of sulfur (SOx) shall be performed at the inlets to the two venturi scrubbers of devices C42 and C202.

G. The inlet tests for SOx on the inlet of device C42 shall be performed simultaneously with tests for SOx at the outlet of the tray-type scrubber of device C43.

H. The inlet tests for SOx on the inlet of device C202 shall be performed simultaneously with tests for SOx at the outlet of the tray-type scrubber of device C203.

I. The total number of test runs for SOx shall be determined pursuant to the source test protocol requirements in Rule 2011.

[RULE 1401, RULE 1402, RULE 1407, RULE 1420, RULE 2005, RULE 2011]

[Devices subject to this condition: C40, C41, C42, C43, C45, C202, C203]

MODIFIED

D323.1 The operator shall conduct an inspection for visible emissions from all stacks and other emission points of this equipment whenever there is a public complaint of visible emissions, whenever visible emissions are observed, and on a semi-annual basis, at least, unless the equipment did not operate during the entire semi-annual period. The routine semi-annual inspection shall be conducted while the equipment is in operation and during daylight hours.

If any visible emissions (not including condensed water vapor) are detected that last more than three minutes in any one hour, the operator shall verify and certify within 24 hours that the equipment causing the emission and any associated air pollution control equipment are operating normally according to their design and standard procedures and under the same conditions under which compliance was achieved in the past, and either:

1). Take corrective action(s) that eliminates the visible emissions within 24 hours and report the visible emissions as a potential deviation in accordance with the reporting requirements in Section K of this permit; or

2). Have a CARB-certified smoke reader determine compliance with the opacity standard, using EPA Method 9 or the procedures in the CARB manual "Visible Emission Evaluation", within three business days and report any deviations to AQMD. The operator shall keep the records in accordance with the recordkeeping requirements in Section K of this permit and the following records:

1). Stack or emission point identification;
2). Description of any corrective actions taken to abate visible emissions;
3). Date and time visible emission was abated; and
4). All visible emission observation records by operator or a certified smoke reader.

[RULE 3004(a)(4)-Periodic Monitoring, 8-11-1995]

[Devices subject to this condition : D1, D2, D7, D8, D9, D10, D11, D12, D13, D14, D15, D16, D17, D18, D19, D20, D24, D25, D26, D27, D28, D29, D30, D31, D32, D33, D34, D35, D36, D37, C42, C43, C44, D58, D59, D60, D61, D62, D63, D64, D65, D66, D67, D68, D69, D74, D75, D76, D77, D78, D79, D80, D81, D82, D83, D84, D85, D86, D87, D88, D89, D90, D91, D92, D93, D94, D95, D96, D97, D109, D110, D111, D112, D113, D114, D115, D116, D117, D118, D119, D120, D121, D122, D123, D124, D125, D126, D127, D128, D129, D130, D131, D132, D133, D135, D136, D137, D138, S139, C143, D149, D151, D152, D153, D154, D155, C159, D161, C162, D164, C165, C172, D173, D183, C184, C186, C188, C196, **D197, D198, C199, C200, C201, C202, C203, C204, C205]**

NEW
E448.11 The operator shall comply with the following requirements:

A Rule 1402 facility-wide health risk assessment (HRA) shall be performed subject to the following conditions:

A) Upon approval of the source test report for the rotary dryer furnace air poll ution control system, the two process venturi/tray scrubber systems at this facility, and the HEPA filter systems installed on the MAC baghouses, cupola feed room baghouse, and the soft and hard lead baghouses, detailed dispersion modeling and an HRA shall be performed based on the new emission rate data and based on instructions provided by the SCAQMD subsequent to approval of the source test report.

B) Within 60 days following the SCAQMD approval of the initial source test res ults, Exide shall submit a revised AB2588 HRA based on the approved source test results to determine the risk level (MICR and hazard indices) and the cancer burden.

C) Two copies of the HRA report shall be submitted to the SCAQMD (Attention: Energy/Public Services/Waste Management/Terminals Permitting.)

D) The HRA report prepared pursuant to this condition shall be used to demonstrate compliance with Rule 1402 requirements in conjunction with the Risk Reduction Plan submitted by Exide to the SCAQMD. The demonstrated risk shall not exceed the action risk levels as defined in Rule 1402 and the demonstration shall be completed within the timeline set forth in the rule.

[RULE 1402, 3-4-2005]

[Devices subject to this condition: S139, S140, S141, S142, S145, S158, S166, S187, S189]

NEW
E448.12 The operator shall comply with the following requirements:

A. Smoke tests shall be performed on the cupola furnace slag tap hood and the cupola furnace thimble enclosure pursuant to the following requirements.

B. A smoke device capable of generating 8,000 cubic feet of smoke shall be used, or an equivalent smoke device as approved by the Executive Officer.

C. Smoke Test Procedure: Place a small open container or metal plate on a stable and flat area inside of the hood enclosure. Place the smoke device inside the container and/or on the plate. After lighting the smoke device, quickly close any access door(s) to avoid smoke from escaping. Let the smoke device completely burn. The entire space inside the enclosure will now be filled with the smoke. Observe for leaks of smoke from each seal, joint, and opening.

D. Using a video camera, record the observations of the smoke test and make a qualitative assessment of any leaks of smoke. The video recording shall include a time stamp identifying the calendar date and the chronological time of each smoke test.

E. Using the procedure in conditions C and D, perform a smoke test on the new cupola furnace thimble enclosure upon the initial cold start-up of the cupola furnace subsequent to the start of natural gas combustion in both the cupola furnace and afterburner, but prior to the initial coke, lead metal, and/or feed charge while the cupola furnace is warming up. Record video observations of the outside of the enclosure. Simultaneously, record video observations of the isolation door inside the enclosure with the existing isolation door video camera.

F. Using the procedure in conditions C and D, perform a smoke test on the new cupola furnace thimble enclosure while the cupola furnace is in full operation and charging is occurring. Record video observations of the outside of the enclosure. Simultaneously, record video observations of the isolation door inside the enclosure with the existing isolation door video camera.

G. Using the procedure in conditions C and D, perform a smoke test on the new slag tapping hood enclosure while the cupola furnace is in full operation. The video records shall indicate that no smoke leaks occur at any point of the enclosure.

H. Using standard titanium tetrachloride smoke sticks, perform smoke tests of the two refining pot furnaces which will be used for arsenic additions. Record video of these events to demonstrate that no fugitive emissions escape capture by the pot furnace hoods.

I. Video files for both the internal and external smoke observations of the cupola furnace thimble hood enclosure, the cupola furnace slag tap smoke tests, and the refining pot furnace smoke tests shall be submitted to the SCAQMD (Attention: Energy/Public Services/Waste Management/Terminals Permitting).

J. The video files shall be submitted on compact disk or DVD in the avi or wmv Microsoft Windows video formats, or authored as standard NTSC MPEG2 DVD video disks.

K. The video files produced shall have calendar date and time stamps visible on each video frame.

L. The date and time stamps on the video files shall be synchronized with the network time associated with data acquisition of the processes at the Exide facility. The precision of the time synchronization for this purpose shall be accurate to within plus or minus 30 seconds.

M. The video records shall demonstrate that no smoke leaks occur from any point of the cupola thimble hood enclosure, the cupola furnace slag tapping port and the cupola charging cart tunnel opening.

[RULE 1401, RULE 1402, RULE 1407, RULE 1420, RULE 2005]

[Devices subject to this condition: D7, D9, D128, D132, D133]

NEW
E448.13 The operator shall comply with the following requirements:

The following requirements shall apply to monitoring of static pressure differential inside of smelting furnaces at this facility for compliance with Rule 1420.1.

A. The monitoring device shall be approved by the Executive Officer pursu ant to Rule 1420.1 (f)(4).

B. The monitoring device shall:

a. Continuously measure the instantaneous static differential furnace pressure.
b. Have a resolution of at least 0.01 inches water column.
c. Have an increment of measurement of 0.01 inches water column.
d. Have a range from -10 inches to +10 inches water column for the measuring device.
e. Be equipped with ports to allow for periodic calibration in accordance w ith manufacturer's specifications.
f. Be calibrated according to manufacturer's specifications at a frequen cy of not less than twice every calendar year.
g. Be equipped with a continuous data acquisition system (DAS). The DAS shall record the data output from the monitoring device at a frequency of not less than once every sixty (60) seconds.
h. Generate data files from the computer system interfaced with each D AS each calendar day. The data file shall be saved in electronic ASCII character format, Microsoft Excel (xls or xlsx) format, PDF format, or other format as approved by the Executive Officer. The file shall contain a table of chronological date and time and the corresponding data output value from the monitoring device in inches of water column. The operator shall prepare a separate data file each day showing the 30-minute average pressure readings recorded by this device each calendar day.
i. Be maintained in accordance with manufacturer's specifications.

C. A reverberatory furnace may be operated at an alternative static different ial furnace pressure if the owner or operator can demonstrate that it can achieve emission reductions that are equivalent to or better than those achieved when operating at a pressure of -0.02 or more negative.

a. Demonstration shall be based on source test protocols and source tests conducted pursuant to the requirements of subdivision Rule 1420.1 (k) and approved by the Executive Officer.
b. The alternative static differential furnace pressure shall not exc eed 0.4 inches water column and must be approved by the Executive Officer in the Continuous Furnace Pressure Monitoring Plan of Rule 1420 (f)(4).

[RULE 1420.1]
[Devices subject to this condition : D119, D128]

NEW
E448.14 The operator shall comply with the following requirements:

The following requirements apply to the monitoring of air pollution control system (APCS) exhaust gas flow rates at this facility.

A. The nomenclature used to identify the individual air flow meters and /or pressure differential measuring devices is listed below and shall be used for monitoring, record keeping and reporting under this permit condition. Exhaust gas flow meters and/or pressure differential measuring devices shall be installed on the following exhaust duct locations associated with APCS No. 1 (serving the reverberatory furnace) and APCS No. 2 (serving the cupola furnace).

a. The exhaust duct directly connected to the pot furnaces of Device Nos. D7 an d D9, prior to the connection of this duct with any other attached duct. This meter or device shall be identified as Measuring Device F7.

b. The exhaust duct directly connected to the slag tapping hood serving the c upola slag tapping port of Device D132, prior to the connection of this duct with any other attached duct. This meter or device shall be identified as Measuring Device F132.

c. The exhaust duct directly connected to the blower exhaust outlet of th e RTO of Device C205, serving the cupola furnace thimble hoods, prior to the connection of this duct with any other attached duct. This meter or device shall be identified as Measuring Device F205.

d. The exhaust duct directly connected to the blower exhaust outlet of cu pola furnace baghouse no. 1 of Device C45, serving the cupola furnace, prior to the connection of this duct with any other attached duct. This meter or device shall be identified as Measuring Device F45.

e. The exhaust duct directly connected to the blower exhaust outlet of cu pola furnace baghouse no. 2 of Device C41, serving the cupola furnace, prior to the connection of this duct with any other attached duct. This meter or device shall be identified as Measuring Device F41.

f. The exhaust duct directly connected to the blower exhaust outlet of th e reverberatory baghouse of Device C40, serving the reverberatory furnace, prior to the connection of this duct with any other attached duct. This meter or device shall be identified as Measuring Device F40.

g. The exhaust duct section directly connected to the manual damper located between the venturi scrubbers of Device C42 and the scrubber of Device C202. This flow meter shall be installed adjacent to the manual damper on the side closest to device C42, prior to the connection of this run of duct with any other attached duct. This meter shall be identified as meter F42MD. This meter shall also be capable of indicating the relative direction of gas flow. A positive gas flow shall be defined as a flow towards device C42.

h. The ducts referenced in a. through g. of this condition shall be inspected at least annually for material build-up or other conditions that may contribute to the obstruction of air flow in the ducts. Any such material build-up or condition found that may contribute to such air flow obstruction shall be removed or remedied such that proper air flows are achieved based on original system design.

B. The operator shall record the following data for the measuring devices designated in this condition as F7, F40, F41, F45, F42MD F132, and F205. This data shall include the following:

a. Date
b. Time
c. Meter Identification
d. Actual meter reading in displayed units
e. The conversion factor from displayed and/or recorded units to flow rate
f. Flow rate in actual cubic feet per minute (ACFM)
g. Initials of person taking each reading, unless automated data is taken

C. The data logging required by this condition shall either be recorded manually or shall be recorded using a digital data acquisition system.

D. If the data is recorded manually, it shall be recorded not less than once per hour. If the data is recorded automatically, it shall be recorded on a one minute interval sampling rate.

E. If automatic monitoring is used, the monitoring devices shall:
a. Continuously measure the instantaneous flow rate.
b. Be calibrated according to manufacturer's specifications at a frequency of not less than once every calendar year.
c. Be equipped with a continuous data acquisition system (DAS). The DAS shall record the data output from the monitoring device at a frequency of not less than once every sixty (60) seconds.
d. Generate data files from the computer system interfaced with each DAS each calendar day. The data file shall be saved in electronic ASCII character format, Microsoft Excel (xls or xlsx) format, PDF format, or other format as

approved by the Executive Officer. The file shall contain a table of the data specified in this condition.

e. Be maintained in accordance with manufacturer's specifications.

F. For the purpose of this condition, Exide has the option of installing alter nate parameter measuring devices including, but not limited to, pressure differential gauges and pressure transducers which measure and record a pressure reading which can be converted to a flow rate using appropriate conversion factors as indicated in subpart (B)(e) of this condition. The conversion factor shall be updated at least once every 12 calendar months.

[RULE 1401, RULE 1402, RULE 1407, RULE 1420, RULE 1420.1]

[Devices subject to this condition : D7, D9, C40, C41, C45, C42, D132, C205]

MODIFIED

H116.2 The operator shall be subject to the requirements stated in Rules 1407 and 1420 in order to comply with these rules whenever this equipment is in operation.

[RULE 1407, 7-8-1994; RULE 1420, 9-11-1992]

[Devices subject to this condition : D7, D9, D11, D13, D15, D17, D19, D24, D26, D28, D30, D32, D34, D36, C38, C39, C40, C41, C42, C43, C44, C45, C46, C47, C48, D115, D119, D128, C144, **C196, C200, C201, C202, C203, C204]**

MODIFIED

K67.7 The operator shall keep records, in a manner approved by the **SCAQMD**, for the following parameter(s) or item(s):

A daily operating log documenting venturi and tray scrubber liquid flow rates, in gallons per minute, and liquid pH, with liquid flow rate entries made at intervals not to exceed 1 hour, and liquid pH entries made at intervals not to exceed 4 hours.

A daily operating log documenting venturi and tray scrubber pressure differentials, in inches water column, with entries made at intervals not to exceed 1 hour.

[RULE 1303(a)(1)-BACT, 5-10-1996; RULE 1303(b)(2)-Offset, 5-10-1996; 40CFR 63 Subpart X, 6-23-2003]

[Devices subject to this condition : C42, C43, **C202, C203]**

NEW

K67.12 The operator shall keep records, in a manner approved by the SCAQMD, for the following parameter(s) or item(s):

Records from the regenerative thermal oxidizer temperature recording device(s).

The dates on which calibrations of the regenerative thermal oxidizer temperature recording device(s) are performed.

[RULE 1303(a)(1)-BACT]
[Devices subject to this condition: C199, C205]

NEW

K67.13 The operator shall keep records, in a manner approved by the SCAQMD, for the following parameter(s) or item(s):

The calendar dates on which calibrations of the triboelectric-type broken filter detector are performed.

A copy of the protocol from the manufacturer used to calibrate the triboelectric-type broken filter detector.

[RULE 1303(a)(1)-BACT, RULE 1407]
[Devices subject to this condition : C204]

Revised Final Risk Reduction Plan
Rule 1402

Prepared for:
South Coast Air Quality Management District
Diamond Bar, California

On behalf of:
Exide Technologies, Inc.
Vernon, California

Prepared by:
ENVIRON International Corporation
Los Angeles, California

Date:
Revised August 2014

Project Number:
0721624V

REGISTERED PROFESSIONAL ENGINEER
RUSSELL S. KEMP
1004233
EXP. 9/30/15
INDUSTRIAL
STATE OF CALIFORNIA

Russell S. Kemp, PE
Principal

ENVIRON

Certification [(f)(3)(I)]

I certify that this Risk Reduction Plan meets the requirements for such plans set forth in South Coast Air Quality Management District Rule 1402(f)(3) and that I am officially responsible for the processes and operations of the Exide Technologies lead recycling facility in Vernon, California.

John Hogarth
Plant Manager

Contents

		Page
Executive Summary		**ES.1**
1	**Introduction**	**1**
2	**Facility Identification [(f)(3)(A)]**	**2**
3	**Risk Characterization [(f)(3)(B)]**	**3**
4	**Sources Requiring Risk Reduction [(f)(3)(C)]**	**6**
5	**Evaluation of Available Risk Reduction Measures [(f)(3)(D)]**	**14**
6	**Specification of Risk Reduction Measures [(f)(3)(E)]**	**24**
7	**Schedule [(f)(3)(F)]**	**25**
8	**Estimation of Post-Implementation Risk [(f)(3)(H)]**	**22**

List of Tables

Table 1:	MEIW Risk Contributions – Post Isolation Door	13
Table 2:	MEIW Cancer Risks of Metal Emissions from Four Exide Stacks	15
Table 3:	MEIW Cancer Risks of Metal Emissions from Eight Exide Stacks	18

List of Appendices

Appendix A:	May 2, 2013 Memorandum on Preliminary Testing of Door Effectiveness
Appendix B:	Updated Emission Inventory and Health Risk Assessment
Appendix B.d:	Updated Emission Inventory and Health Risk Assessment – AQMD Test Data
Appendix C:	Feasibility Study – SCAQMD Rule 1420.1(o)
Appendix D:	Projected Health Risks Following All Proposed Measures
Appendix E:	HRA CD-ROM

List of Attachments

Attachment A:	Blast Furnace Enclosure
Attachment B:	Blast Furnace Slag Tap Hood
Attachment C:	Scrubbing System Flow Balance

EPA-R9-2016-005534-0024986

Executive Summary

In January 2013, Exide submitted a Health Risk Assessment (HRA) for its facility in Vernon, California, pursuant to the requirements of AB2588 and AQMD Rule 1402. On March 1, 2013 the South Coast Air Quality Management District (AQMD) approved Exide's HRA. Since that time, Exide and AQMD have mailed notices and held public meetings informing the neighboring community of the risks presented in that HRA, some of which exceeded Rule 1402's Action Risk Levels requiring reduction.

Following the HRA approval, Exide promptly installed an isolation door on the feed chute to the Vernon facility's blast furnace in order to reduce the potential for arsenic emissions from the Hard Lead Ventilation System Stack. Exide conducted preliminary engineering testing of the emissions from that stack in April 2013, the results of which indicated that the isolation door was effective in substantially reducing emissions of arsenic and organic toxics from the Hard Lead Ventilation System Stack. Formal emission testing following full AQMD testing protocols to confirm this performance commenced on August 13, 2013. Results from that complete series of tests were submitted to AQMD in October 2013 and final test reports from that testing were submitted to AQMD in early November 2013. In addition, AQMD staff conducted tests on several stacks in August and September 2013, the results from which were reported on October 17, 2013.

Based on available data, including data developed by AQMD, Exide reasonably believes that the isolation door has already reduced emissions sufficient to reduce risks to well below the Rule 1402 Action Risk Levels. Exide achieved these reductions prior to the Risk Reduction Plan (RRP) submittal deadline. Exide submitted an initial Risk Reduction Plan on August 28, 2013, which was based upon the preliminary testing conducted in April 2013.

AQMD issued a letter on October 24, 2013 disapproving the August 28, 2013 RRP and making recommendations in a number of areas. Though Exide respectfully does not concur with all of the points made in the October 24, 2013 letter, it submitted a revised RRP on November 26, 2013 addressing AQMD's primary issues and proposing a number of additional measures designed to ensure that Exide can consistently and permanently maintain the reduced post-isolation door emission levels.

On December 17, 2013, AQMD requested that Exide clarify certain points in the November 26, 2013 revised RRP. Exide responded by letter on December 30, 2013. Exide and AQMD staff met to discuss these clarification points in person on January 2, 2014. An Amended Revised RRP was submitted on January 17, 2014 in response to all those discussions and exchanges. AQMD issued Provisional and Conditional Approval of the Amended Revised RRP by letter on February 12, 2014 in which further detail was requested. A Final RRP—referred to below as the "March 2014 RRP"—was submitted in March 2014 and subsequently approved by AQMD.

After consultation with District staff in July 2014, Exide made a revision to the design set forth in the approved March 2014 RRP. In this revised design, the ventilation gases captured by Charge Hood at the top of the Blast Furnace will be treated separately from the Blast Furnace process gases. The ventilation gases from the charge enclosure at the top of the blast furnace

will first pass through a cartridge filter to remove particulates before flowing through a regenerative thermal oxidizer (RTO). The treated ventilation gases will then be combined with gases collected from the slag tap and the refining kettle hoods before being sent to the new Blast Furnace Baghouse #2 APC train (with subsequent wet scrubbing) for further emission control.

Exide believes that this Revised Final RRP is robust and fully responsive to all AQMD input and feedback provided thus far during this process.

This Revised Final RRP presents updated risk information based on the results of the above-referenced post-isolation-door stack testing (both Exide's and AQMD's testing) along with the additional emission and risk reduction measures that Exide proposes to install. This Revised Final RRP sets forth implementation schedules for the proposed measures and provides an assessment of the expected emission and risk levels following completion of all proposed projects.

In summary, Exide is committed to install further control equipment for both metals and organic compound emissions even though the data demonstrate that the measure already completed is sufficient to comply with Rule 1402's requirements. These additional measures are expected to be installed within approximately nine months of this Revised Final RRP submittal, which is less than 1/4 of the time allowed under Rule 1402.

The measures proposed for installation under this Revised Final RRP are as follows:

A new venturi and tray type wet scrubbing system will be installed to serve the main air pollution control system (APCS) function for the Blast Furnace, removing this load from the existing Neptune scrubbing APCS system. The existing Neptune scrubber will continue in service for the reverberatory furnace. Installation of this second wet scrubbing system will allow the primary process draft to each furnace to be managed independently to reduce emissions and maintain appropriate pressure in both furnaces pursuant to amended Rule 1420.1. This modification will also reduce emissions of metal and organic constituents as limited in amended Rule 1420.1.

Ventilation hoods now connected to the Hard Lead Ventilation System serving the charging area at the top of the blast furnace will be redirected to a new cartridge collector and Regenerative Thermal Oxidizer (RTO) before being directed through the main APCS train serving the Blast Furnace, including a new wet scrubber..

A new enclosure within the overall Blast Furnace partial enclosure will be installed around the furnace charge area so as to serve as a further hood to enhance capture of gases escaping the charge isolation door by the hoods at the top of this enclosure. **The current partial enclosure in which the Blast Furnace resides will be enhanced with sealed siding and close-fitting doors**

A radar-based charge level sensor will be installed within the blast furnace in order to provide operators with ongoing data regarding the level of the feed burden within the furnace.

A temperature sensor will be installed within the top of the Blast Furnace as a further operational indicator.

The ventilation hood now connected to the Hard Lead Ventilation System serving the slag tap of the Blast Furnace will be enlarged, served with greater air flow, and redirected to a baghouse that will be routed to the new wet scrubbing system.

The existing ram feeding mechanisms on the Reverberatory Furnace will be replaced with screw feeders to reduce the potential for organic-bearing process gases to be drawn into the Soft Lead Ventilation System pickup hooding when the ram feeders cycle.

The ventilation hooding serving two refining kettles will be removed from the Hard Lead Ventilation System and redirected to a baghouse that will be routed to the new wet scrubbing system. In the future, arsenic additions in refining operations will be restricted to these two kettles.

A regenerative thermal oxidizer (RTO) will be installed on the reverberatory furnace feed dryer exhaust to reduce emissions of organic gases.

Secondary High Efficiency Particulate Air (HEPA) filtration will be installed downstream of the Hard Lead Ventilation System baghouse, the Soft Lead Ventilation System baghouse, and the MAC baghouse to reduce emissions of lead, arsenic, and other metals. Following these installations, all baghouses at the facility will have secondary filtration provided either by a wet scrubber or HEPA.

A multiple-metals Continuous Emission Monitor will be temporarily installed for evaluation purposes on the Hard Lead Ventilation System stack as part of the pending Rule 1420.1 demonstration program for this technology.

These risk reduction measures will be accomplished at various times during 2014 in a staged fashion, contingent upon timely AQMD permit review and approval. Permit applications for a number of these measures have already been submitted to AQMD for consideration.

1 Introduction

On March 1, 2013 the AQMD approved the HRA submitted by Exide for its facility in Vernon, California. That approval letter summarized the projected risk levels presented in the HRA and identified several metrics above the Action Risk Levels set forth in Rule 1402. Pursuant to Rule 1402(f)(2), facilities with risks in excess of these Action Risk Levels must submit a RRP within 180 days of HRA approval which, in the case of the Exide facility, was August 28, 2013. Exide submitted an RRP before August 28, 2013, as required. AQMD rejected the initial RRP by letter on October 24, 2013. Exide submitted a revised RRP on November 26, 2013, an Amended Revised RRP on January 17, 2014, and the March 2014 RRP on March 4, 2014. Exide now submits this Revised Final RRP in satisfaction of Rule 1402(f)(2) requirements and in response to feedback provided by AQMD

Rule 1402(f)(3) outlines the contents to be included in such Risk Reduction Plans. To facilitate review, this document tracks that outline.

Since the approval of this facility's HRA on March 1, 2013, Exide has provided public notice and conducted multiple public meetings in collaboration with AQMD in accordance with Rule 1402(p). Most importantly, Exide promptly addressed the primary source of risk -- arsenic emissions from the facility's Hard Lead Ventilation System stack -- with the installation of a feed chute isolation door on the facility's blast furnace. This proactive measure reduces the potential for blast furnace process exhaust to enter that ventilation system. Exide conducted preliminary engineering testing on the Hard Lead Ventilation System stack in early April 2013. Results of that testing indicate that the door has been effective in reducing arsenic emissions from this stack to a degree that reduces the health risks to below the Action Risk Levels required by Rule 1402(e)(1). These emission reductions were confirmed in extensive testing conducted by both Exide and AQMD in August and September of 2013.

Despite having achieved compliance with Rule 1402, Exide presents in this Revised Final RRP additional risk reduction measures that it expects to install over the first quarter of 2015 to further reduce emissions and health risk from the facility, and to provide greater certainty in response to AQMD's concerns about maintaining the risk reductions. Exide reserves the right to amend or modify this RRP depending on the results of future AQMD rulemaking that may impact the facility.

The primary elements of this plan are as follows:

- An update on the "current" risk from the facility based upon latest testing data obtained by Exide and AQMD in August and September 2013,
- Additional control measures Exide commits to further reduce emissions,
- A projection of the future expected risk from the facility after implementation of all these measures, and
- Schedules associated with all these activities.

2 Facility Identification [(f)(3)(A)]

This Plan is for the following facility:

Exide Technologies
2700 South Indiana Street
Vernon, California 90058

AQMD Facility ID 124838
SIC Code 3341, NAICS Code 331492

3 Risk Characterization [(f)(3)(B)]

The January 2013 AB2588 HRA for this facility, as approved in the AQMD's March 1, 2013 letter, indicated the following key risk metrics:

Maximum Exposed Individual Worker cancer risk	156 in one million
Maximum Exposed Individual Resident cancer risk	22 in one million
Cancer Burden	10
Maximum Chronic Hazard Index, Worker	63
Maximum Chronic Hazard Index, Resident	2.9
Maximum Acute Hazard Index, Worker	3.7
Maximum Acute Hazard Index, Resident	0.2

These theoretical risks were calculated using results from facility-wide emission testing for AB2588 compounds conducted largely in late 2010 and early 2011. Subsequent retesting of emissions from the Hard Lead Ventilation System stack and the Neptune Scrubber stack was conducted in 2012. The risk assessment was conducted using the average emission rates between these 2010 and 2012 tests as fully tabulated in the January 2013 HRA.

Analysis of the HRA results and concurrent research determined that approximately 90 percent of the above-tabulated risks were due to emissions of arsenic from the Hard Lead Ventilation System stack and that the source of that arsenic was movement of blast furnace process exhaust from the blast furnace charging chute into hooding served by the Hard Lead Ventilation System. These process exhausts are intended to leave the blast furnace via the downstream afterburner, baghouse, and Neptune Scrubber, which are very effective at controlling arsenic emissions. Exide determined that preventing this process exhaust from entering the Hard Lead Ventilation System hooding was the fundamental solution to reducing the arsenic emissions and associated risk.

Promptly after AQMD approval of the HRA on March 1, 2013, Exide designed an isolation door on the charge chute to the facility's blast furnace to minimize the potential for blast furnace process exhaust gases to be drawn into the hooding served by the Hard Lead Ventilation System. This door system was permitted on March 28, 2013, and became operational on April 4, 2013. This door remains closed except to open briefly when charge material is actually being added to the furnace, which is only a small percentage of the time.

Exide conducted preliminary engineering stack tests on the Hard Lead Ventilation System stack over four days in the first two weeks of isolation door operation. AQMD staff observed many of these tests and AQMD's laboratory was provided physical splits of the samples collected by Exide's testing contractor. In addition, AQMD personnel conducted a test of the emissions of metals from the Neptune Scrubber stack on April 18 and 19, 2013.

Appendix A contains the May 2, 2013 memorandum describing the results of the preliminary engineering stack tests conducted in April 2013 to assess the effectiveness of the isolation door in reducing arsenic emissions from the Hard Lead Ventilation System stack. Key findings of this preliminary engineering assessment are:

- Arsenic emissions from the Hard Lead stack are reduced by 98 to 99 percent,
- Benzene and 1,3-butadiene emissions from the Hard Lead stack are reduced by 96 to 99 percent, and
- The linked reduction in arsenic and organic toxic emissions from the Hard Lead stack supports the conclusion that blast furnace process exhaust had previously caused the elevated arsenic emissions.

Emissions measured by AQMD from the Neptune Scrubber stack were comparable to those used in the HRA, indicating that the improved retention of the blast furnace process exhaust gases in the Neptune Scrubber air pollution control system does not adversely affect emissions and risk.

As specified in the air permit issued for the installation of the isolation door on March 28, 2013, Exide conducted further emission testing to confirm these improvements. After consultation with the AQMD, this testing was expandedto include the full suite of AB2588 metals for the Hard Lead, Soft Lead, and Neptune Scrubber stacks conducted simultaneously, as well as inclusion of the full set of organic toxic air contaminant emissions addressed in the HRA. AQMD was provided splits of all samples.

Exide was prepared to perform this testing promptly after isolation door installation, but the testing was unavoidably delayed because Exide was forced to cease operations for more than seven weeks pursuant to the Department of Toxic Substances Control's April 24, 2013 Suspension Order. Exide recommenced operations after a Judge issued a preliminary injunction staying DTSC's Order. Exide started source tests on August 13, 2013, which continued over 15 days in a period spanning about six weeks.

Based on Exide data collected to date, the "*risk due to total facility emissions has… decreased below the levels indicated in the previously approved health risk assessment.*"[Rule 1402(f)(3)(B)] Further to the data presented in the Appendix A memorandum, complete risk calculations have been repeated using all the input data from the approved 2013 HRA and substituting the emissions data collected in August and September 2013 by Exide from the Hard Lead, Soft Lead, and Neptune Scrubber stacks. This "updated air toxics emission inventory and health risk assessment" is included as Appendix B.

In summary, this updated assessment in Appendix B indicates the following key risk metrics:

Maximum Exposed Individual Worker cancer risk	5.8 in one million
Maximum Exposed Individual Resident cancer risk	2.1 in one million
Cancer Burden	0.05

Maximum Chronic Hazard Index, Worker	0.5
Maximum Chronic Hazard Index, Resident	0.05
Maximum Acute Hazard Index, Worker	0.1
Maximum Acute Hazard Index, Resident	0.009

Each of these risk metrics is BELOW the Action Risk Levels specified in Rule 1402.

In addition, AQMD conducted tests of the Hard Lead and Soft Lead stacks in August and September 2013 and had a contractor test emissions from the North and South Torit building ventilation system stacks in September 2013. A second set of "current case" risk calculations was performed substituting in these AQMD data for those stacks and pollutants tested and are presented. This "updated air toxics emission inventory and health risk assessment – AQMD data," is included as Appendix B.d.

In summary, this updated assessment using AQMD data, which is presented in Appendix B.d, indicates the following key risk metrics:

Maximum Exposed Individual Worker cancer risk	9.8 in one million
Maximum Exposed Individual Resident cancer risk	2.7 in one million
Cancer Burden	0.2
Maximum Chronic Hazard Index, Worker	1.9
Maximum Chronic Hazard Index, Resident	0.1
Maximum Acute Hazard Index, Worker	0.2
Maximum Acute Hazard Index, Resident	0.009

Each of these risk metrics derived from AQMD testing is BELOW the Action Risk Levels specified in Rule 1402, and all are comparable to those computed from the preliminary April engineering testing described in Appendix A.

In summary, whether based on Exide data or AQMD data, Exide's current emissions and risk profile satisfy Rule 1402 standards.

4 Sources Requiring Risk Reduction [(f)(3)(C)]

As identified in the January 2013 HRA, 90% of the calculated facility cancer risk is due to arsenic emissions and 4% of the calculated facility cancer risk is due to 1,3-butadiene emissions. Further, the Hard Lead Ventilation Stack accounted for 97% of the facility's annual arsenic emissions and 67% of the facility's 1,3-butadiene emissions. Therefore, the Hard Lead Ventilation System stack is the source requiring risk reduction to achieve the Rule 1402 Action Risk Levels. As shown through the updated risk calculations of Appendix B, which indicate the degree of risk reduction associated with control/reduction of the arsenic and 1,3-butadiene emissions from the Hard Lead Ventilation System stack due to the isolation door installation, control of this stack's emissions will be sufficient to achieve the Action Risk Levels.

Despite Exide's ability to achieve needed risk reductions via the isolation door on the Hard Lead Ventilation System stack, Exide (in good faith and while reserving its legal rights and right to modify) will install additional control measures on a number of other sources to reduce risks even further below those depicted in Appendix B. In particular, Exide will install the following additional air pollution control devices to further reduce calculated risks from the facility:

Secondary High Efficiency Particulate Air (HEPA) filtration will be installed downstream of the following baghouses, reducing their emissions of lead, arsenic, and other toxic metals:

– Hard Lead Ventilation System Baghouse

– Soft Lead Ventilation System Baghouse

– MAC Baghouse

A Regenerative Thermal Oxidizer (RTO) will be installed on the Reverberatory Furnace Feed Dryer exhaust to reduce emissions of 1,3-butadiene and other organic toxics.

A Regenerative Thermal Oxidizer (RTO) will be installed to reduce emissions from the Blast Furnace Charge Hood ventilation air.

Note that the facility has already installed secondary HEPA filtration downstream of both the North and South Torit cartridge collectors, the Material Handling baghouse, and the feed dryer baghouses. These four HEPA installations were made AFTER the testing conducted for the AB2588 Emissions Inventory and the effect of their improvement is NOT reflected in the January 2013 HRA results. The effect of the HEPA installation on the Torit units is reflected in the updated risk results presented in Appendix B based upon the testing conducted in September 2013.

Exide diligently reviewed the District's October 24, 2013 letter, feedback on the November 26, 2013 revised RRP, and the District's February 17, 2014 letter in the context of its operations,

has proposed several measures expected to address the AQMD's concerns, and has provided further detail by letter on March 4, 2014.[1]

Exide will make the following modifications and expansions to existing air pollution control systems in order to improve the consistency and reliability of the prevention of process gas introduction into the Hard Lead and other ventilation systems without having primary reliance on the function of the recently installed isolation door:

Install a second wet venturi scrubbing system for the control of direct furnace process exhaust to operate in tandem with the existing Neptune scrubber system. This new scrubbing system will primarily provide control of the blast furnace process emissions. This change will provide greater overall process gas handling capacity, increasing the primary draft on both furnaces. This measure satisfies and is in response to Item 2 of AQMD's October 24, 2013 letter. The planned capacity increase for the primary APCS scrubbing system will be designed such that sufficient gas cooling is provided via internal spray cooling (reverberatory furnace) and cooling loops (blast furnace) and enhancement to the blast furnace air/water heat exchanger (described further below) so as to limit the introduction of tempering air for cooling to only on an emergency basis (AQMD October 24, 2013 letter, Item 4). Initial conceptual planning is to have the new scrubber provide primary control for the blast furnace and the existing scrubber will provide primary control for the reverberatory furnace. The new scrubbing system will be a wet Venturi scrubber followed by a tray type scrubber similar in arrangement and technology to the current Neptune Scrubber APCS. The design specifications call for the draft capacity to be sufficiently sized to achieve and maintain a negative pressure of at least 0.02 inches of water in each furnace on a 30-minute-average basis. The venturi section future operating pressures will be established during the demonstration stack testing. The initial conceptual basis for such pressures will be those specified in conditions C8.5 and C8.6 of the facility's current Title V permit of at least 20 inches water for the new scrubber controlling the blast furnace and 26 inches water for the existing scrubber controlling the reverberatory furnace.

The current reverb furnace primary APCS includes two shaker style baghouses (C40 and C41) for direct process gas exhaust gas filtration, each of which has sufficient capacity to control the entire reverberatory furnace exhaust flow on its own.

In the future configuration, the northern of these baghouses (C40) will be dedicated to the reverb furnace primary APCS utilizing the existing fan. This unit has 510 bags of Teflon membrane on Teflon substrates with 21,362 square feet of cloth area. At the design flow of 27,000 acfm for the direct reverb offgas, the resulting air-to-cloth ratio is only 1.25, which is well within the capability of a shaker baghouse in this industry.

[1] By submitting the March 2014 RRP or this Revised Final RRP, Exide is not waiving any legal rights associated with the AQMD's October 24, 2013 rejection of the initial RRP, nor is Exide making any admissions with regard to the points raised by AQMD. For instance, Exide continues to reasonably believe that its existing systems operate as designed and permitted and that constant negative pressure is unnecessary for emission control, but submits this Revised Final RRP in a good faith effort to reduce emissions and risk and to satisfy District Rules.

The southern of these baghouses (C41) will be repurposed to serve as baghouse "Blast Baghouse 2" to filter flow from the enlarged blast furnace slag tap hood and two refining kettle hoods described in Item 1 above, as well as the flow from the blast furnace charge hood following treatment in a new Blast Furnace RTO. This unit will continue to have 21,362 square feet of cloth with bags having Teflon membranes on Teflon substrates. Total flow into this unit is expected to be 32,500 acfm, resulting in an air-to-cloth ratio of 1.5.

The other portion of the flow from the enlarged blast furnace slag tap hood and two refining kettle hoods described in Item 1 above, as well as the flow from the blast furnace process gases will be routed to the current Blast Furnace baghouse, which will be fitted with a new exhaust fan. The current blast furnace baghouse will continue to have 22,620 square feet of cloth with bags having Teflon membranes on Teflon substrates. Total flow into this unit is expected to be 32,500 acfm, resulting in an air-to-cloth ratio of just over 1.4.

This future ventilation arrangement is presented in a drawing in **Attachment C.**

The repurposed Blast Baghouse 2 will be fitted with a new exhaust fan. Exhaust from this baghouse and fan will be routed to the new blast furnace venturi/tray scrubbing system. This baghouse and the current blast furnace baghouse are not currently, and will not in the future, be followed by HEPA filtration because they will be followed by wet scrubbing systems to provide secondary control of unfilterable particulate matter. As stated as a general principle, at the conclusion of these modifications all facility primary control devices (e.g., baghouses) will be followed by secondary control – either HEPA or wet scrubbing.

Air permit applications for this baghouse service conversion and fan installations for the repurposed C41 baghouse and existing blast furnace baghouse C45 were submitted by April 10, 2014 as required by Rule 1420.1.

Construction work for this baghouse repurposing will be performed concurrently with the new scrubber installation.

Attachment C also presents tabular flow balance information for the loads to each of the two scrubbing systems, both the existing one that will serve reverberatory furnace and the new one that will serve the blast furnace. As described above, the blast furnace primary APCS flow, carrying blast furnace process gases will be routed through the current tube cooler and blast furnace baghouse. Some of the blast furnace ventilation gases will be combined with the process gases to the inlet to the blast furnace baghouse. The combined gas streams exiting the baghouse will be split, with most of the stream (approximately 70%) routed to the new scrubber and the balance of the stream (approximately 30%) routed to the existing scrubber.

We note that the flow budget through this blast furnace process gas system allows for 15,000 cfm of process exhaust from the blast furnace itself. This compares favorably with the 10,000 cfm basis described in the afterburner analysis of the current configuration in the AQMD's Engineering Report on A/N 374180 (page 20 of 34). Accordingly, draft for the blast furnace chamber will be enhanced to ensure maintenance of negative pressure in that vessel as required under Rule 1420.1.

Ventilation gases captured from the blast furnace charging hood and top enclosure will be directed to a new cartridge filter to remove particulates prior to flow to a new RTO. This treated gas stream will be combined with the ventilation gases from the refining kettles and slag tap hood and introduced into the new Blast Furnace #2 Baghouse control train.

The reverberatory furnace will be exhausted to the current wet scrubbing system at a budgeted air flow of 27,000 cfm. Exide operates the APCS as currently designed and permitted by the District. This new design means that the reverb furnace will have ventilation capacity independent of the blast furnace. This will allow Exide to utilize the full ventilation capacity of the reverberatory furnace baghouse and fan to ensure maintenance of negative pressure as required under Rule 1420.1.

Overall scrubber capacity more than doubles under this configuration and the air allocated to the direct process gas handling of each furnace increase even though the scrubbing systems are also handling other sources as well.

Flow from the two scrubbers will be combined into a common stack at the location of the current Neptune Scrubber stack, with the same height but a larger diameter to accommodate the increased flow.

As a further measure to backstop the function of the isolation door and the improved furnace draft provided by the expanded scrubbing capacity, **Exide will redirect the ventilation hoods serving the charge area atop the blast furnace from the Hard Lead Ventilation System to the inlet side of a new RTO**. This change will ensure that these gases will be directed through the RTO for the reduction of organic emissions and, subsequently, wet scrubbing control downstream of the primary blast furnace process baghouses.

Exide will not be enhancing the current afterburner because doing so would generate excess NOx emissions that would not meet District emission requirements. Instead, Exide will maintain the existing afterburner configuration of two, 5-MMBtu/hr burners that are able to increase the oxygen content in the combustion air needed to consume the CO and VOCs from the Blast Furnace process gases.

Processing this gas stream in an afterburner would have required a significantly larger afterburner than what was originally proposed in the March 2014 RRP. In order to operate the blast furnace charge hood so that it would be capable of capturing all of the ventilation air, including any gases that may exit the furnace during charging, the design was modified to control these gases separately from the furnace process gases.

The ventilation gases from the blast furnace charge hoods will be vented to a new cartridge filter to reduce particulate loading prior to further emission controls in a new blast furnace RTO. A new blast furnace charge hood fan will be installed to provide for complete capture of ventilation gases at all times, including cold startups.

Ventilation gases exiting the RTO will be combined with gases captured from refining kettles #1 and #2 and the enlarged slag tap hood, and routed to the newly reconfigured Blast Furnace Baghouse #2 and the new scrubber for continued emission control.

Further, **Exide will enhance the enclosure within which the blast furnace is situated to maximize capture of gases that escape from the blast furnace charging door and route them through the cartridge filter and RTO** rather than potentially reaching the Torit building ventilation system. This enclosure enhancement will take the form of a replacement of the siding forming the current enclosure with a sealed skin and close-fitting doors wherever access is required at those upper levels. This enhanced enclosure structure will serve as a hood itself to ensure capture of gases potentially released from the furnace charging area. Any released process gases would be hotter than the surrounding atmosphere and would rise into the collection system that will now be routed to the cartridge filter and RTO and subsequent scrubber. **Attachment A** includes preliminary drawings/graphics describing the enclosure improvement project and showing how currently open spaces or doorways will be closed. This will improve and maintain emission reductions.

Further, **a new enclosure within the overall blast furnace partial enclosure will be installed around the furnace charge area** so as to serve as a further hood to enhance capture of gases escaping the charge isolation door by the hoods at the top of this enclosure. **The current partial enclosure in which the blast furnace resides will be enhanced with sealed siding and close-fitting doors.** The blast furnace charging area is at the third level within this current larger enclosure at which there is a personnel landing at the level of the charge thimble. Exide proposes to install a second inner enclosure at this level. Within this inner enclosure will be the current collection hoods (the slot hood behind the isolation door and three other existing hoods currently routed to the Hard Lead Ventilation System) with an aggregate flow of 25,000 cfm. These hoods would capture emissions escaping beyond the isolation door and their exhaust will be rerouted into the inlet of the blast furnace cartridge filter and RTO for organic emission control. This level has an opening down through the skip hoist tunnel.

To maximize the inward draw through other remaining openings into this new charge level inner enclosure, and to cancel any chimney effect up and through the skip hoist tunnel toward the ventilation extraction at the top of the furnace, a portion of the hard lead baghouse ventilation flow that is being “freed up” by the removal of a number of sources to that system (two refining kettles, blast furnace slag tap hood, and hoods at blast furnace charge area) will be used to impose suction at the bottom section of the skip hoist tunnel, creating a pressure null point within that tunnel. Thus, air will not be drawn up this pathway to the hooding at the charge area. The remaining openings (exclusive of the skip hoist tunnel) to this new inner enclosure will be limited to an aggregate cross sectional area of 125 square feet. Thus, the inward draft velocity through the openings to this new inner enclosure of the blast furnace charge area will be 25,000 cfm / 125 square feet = 200 feet/minute.

This new inner enclosure will sit within the top reaches of the current overall blast furnace partial enclosure which is to be fitted with new siding and doors that can be closed. Exide proposes to replace and/or otherwise seal the siding which comprises the current enclosure around the blast furnace and to install doors where ingress/egress points above the floor level for that enclosure

are currently open. **Attachment A** includes a preliminary drawing describing the enclosure improvement project and showing how the siding will be replaced and currently open gaps or doorways will be closed. This outer enclosure forms a larger bell which has a bottom extent below the thimble height, further facilitating capture from the charge area due to the chimney effect of the heated gases.

This double layer of enclosure and extraction will direct the blast furnace charging area fugitives that might escape the isolation door to the cartridge filter and RTO and subsequent wet scrubbing primary APC systems.

In order to improve process operational control, **Exide will install a radar-based level sensor within the blast furnace in order to provide operators with ongoing data regarding the level of the feed burden within the blast furnace.** Maintaining the charge height is a key aspect for preventing the escape of process gases from the furnace. The installation of the isolation door has been effective for its intended purpose but has eliminated visual observation as a means of tracking the height of the feed burden in the furnace. By maintaining the desired charge height, feed will remain in contact with the bottom of the feed thimble in the charge chute, and the material within the thimble will provide a seal minimizing the potential for gaseous escape through the isolation door even when opened. **In addition, Exide will install a temperature sensor inside the top of the blast furnace as a further operational indicator to guide operators in maintaining the furnace at its desired condition.** If the charge level is too low, the charge burden thickness is reduced, which would lead to increased heat in the top of the furnace that would be detected by this temperature sensor.

Exide will make the following changes to the ventilation system arrangement so as to direct potential sources of gaseous or unfilterable arsenic emissions from the Hard Lead Ventilation System Baghouse to a baghouse followed by wet scrubbing:

> **Redirect the ventilation hoods from two refining kettles in the hard lead section of the refinery from the Hard Lead Ventilation System and reroute the hooding to a baghouse that exhausts into the new wet scrubber serving the blast furnace**. Metallic arsenic additions will be restricted to be made only in one of these two rerouted kettles (Kettles 1 and 2 – Title V permit devices D7and D9) in the hard lead section of the refinery. The ventilation for these kettle hoods is currently routed to the Hard Lead Baghouse. As part of the Amended Revised RRP, this ventilation will be rerouted to the repurposed portion of the reverb baghouse (see Item 2 below) and existing blast furnace baghouse for subsequent wet scrubbing emission control. Each kettle hood is served by 5,500 cfm of ventilation. Exide is changing the routing of the control device, but is not planning to change the current hoods. These current hoods perform well, as demonstrated by the regular hood face velocity monitoring which shows measurements above the pre-2012 NESHAP hood performance specification of 250 ft/minute.
>
> **Redirect the ventilation hood serving the slag tap on the blast furnace from the Hard Lead Ventilation System and reroute the hooding to a baghouse that will exhaust into the new wet scrubber serving the blast furnace**. This hood will also be enlarged and reshaped to provide greater interior hood volume to allow high velocity

discharge gases to slow and facilitate capture by the hood. The current air volume dedicated to this hood will be increased by approximately 20% above current hood flow to also improve hood capture performance. Based upon the functional arrangement of the blast furnace itself, organic gases evolved during the smelting process would rise in the furnace and be drawn from the top of the furnace into the new RTO. Any other gases would also be from the charging door area at the top of the furnace, already being addressed by the rerouting of the charging area hygiene ventilation hoods into the RTO. Such gases would not traverse downward through the high pressure area at the smelting zone where the blast air is introduced, above the slag layer. Thus, the proposed enhanced APC approach for this hood will be venturi scrubbing to address the limited potential that exists for unfilterable metal contaminant (arsenic) emissions, but not introduction into the RTO. **Attachment B** includes preliminary drawings of the new hood showing its dimensions. The current slag tap hood is served by 12,000 cfm of air from the Hard Lead Ventilation System. In the future, this larger hood will be served by 14,000 cfm of air routed to the repurposed portion of the reverb baghouse (see Item 2 below) and current blast furnace baghouse for subsequent wet-scrubbing emission control. This hood has two access doors, one larger door measuring 53 x 45 inches for moving slag pots in and out of the hood and a smaller door measuring 9 x 13 inches for lancing access. This open-door cross sectional area is 17.4 square feet through which 14,000 cfm of extraction would impose an inward velocity of 14,000/17.4 = 800 ft/minute. This 800 ft/minute expected hood face velocity design level will ensure effective hood performance and emission capture. By comparison, the pre-2012 NESHAP hood performance specification for this industry was 300 ft/ minute.

With these ventilation arrangement changes, Exide will be removing a significant amount of the current load from the current Hard Lead Ventilation System as sources such as the two refining kettle hoods, blast furnace slag tap hood, and the blast furnace charging area hoods are routed instead to other control devices, terminating with wet scrubbing. The Hard Lead Ventilation System total flow will not be reduced or downsized. Rather, the capacity freed by removal of these sources will be redirected to general building ventilation extraction on the smelting/refining building and/or the baghouse row enclosure and the extraction on the skip hoist tunnel described above. Such retention of extraction by the overall Hard Lead System will ensure that total enclosure negative pressure performance will not be compromised by these changes.

Exide will also make the following process change:

Replace the existing ram feeding mechanisms on the reverberatory furnace with screw feeders. This will reduce the potential for organic-bearing reverberatory furnace process gases to be drawn into Soft Lead Ventilation System pickup hooding when the ram feeders cycle.

As a potential future means to provide an ongoing and continuous measure of the effectiveness of the isolation door and furnace ventilation systems to retain furnace process gases within the blast furnace, **Exide will temporarily install a multiple-metals continuous emission monitor on the Hard Lead Ventilation System** as part of the pending Rule 1420.1 demonstration

program for this technology. Such a direct measure of effectiveness, if proven effective, has the potential to address District concerns about using an indirect furnace pressure metric.

5 Evaluation of Available Risk Reduction Measures [(f)(3)(D)]

This section will first consider the available measures to reduce emissions and risk from the levels presented in the January 2013 HRA, and will then consider the measures available to reduce emissions further from the post-isolation-door levels presented in Appendix B. This two-step evaluation is warranted because the effectiveness of reducing risk through addressing various pollutants and source points is different at each step.

As outlined in Section 1402(f)(3)(D), the factors to be evaluated for risk reduction measures include emission and risk reduction potential, cost, and time to implement. Starting from the risk levels presented in the January 2013 HRA, and as described above, it was clear to Exide and the AQMD that addressing arsenic emissions from the Hard Lead stack (accounting for 90% of the calculated risk) as quickly as possible was the priority. In that respect, the evaluation of available risk reduction measures took on an early focus much in advance of the regulatory requirement to prepare and submit this Risk Reduction Plan. Assessment of the available emissions testing data showed that the elevated arsenic emission rates from this stack were accompanied by organic toxic emissions, giving strong indication that the underlying cause of elevated Hard Lead stack emissions was the entry of blast furnace process exhaust gases exiting the furnace through the furnace's charge chute into the Hard Lead Ventilation system hood situated adjacent to the charge chute. Exide and ENVIRON believe that these blast furnace process gases can contain forms of arsenic that are not completely filterable by mechanical means such that the Hard Lead baghouse would not effectively control them under certain circumstances, while the blast furnace process offgas system, including a wet scrubber, can and does control them (as evidenced by the available testing data on that exhaust).

Accordingly, with strong and appreciated AQMD cooperation and assistance, Exide proactively designed and implemented a measure directed at source control rather than "end-of-pipe" control to reduce these emissions. That is, at the initial stage, rather than focusing on alternate air pollution control technologies, the effort was directed toward better control of the process itself to ensure that emissions are directed to the existing air pollution control systems as intended and most suited to controlling those emissions. Exide determined that installation of a retractable isolation door at the blast furnace feed charge chute would provide a physical barrier that would block the potential for passage of process exhaust out of the charge chute approximately 95% of the time (when closed). The door would be controlled to open only as needed to allow the passage of charge materials from the skip hoist bucket into the furnace.

Exide designed and installed this feed isolation door within five weeks of AQMD approval of the January 2013 HRA. Exide worked diligently and in close cooperation with the AQMD, which issued an expedited permit to construct within a month of the HRA approval. The greatest value of this measure was the ability to implement it quickly– well ahead of any regulatory timeframes set forth in Rule 1402.

In terms of the risk-reduction potential of this measure, initial projections were based simply on a rough estimate of the percentage of time that the isolation door would remain closed. That is, Exide expected that the isolation door would reduce the arsenic emissions from the Hard Lead

stack by approximately 95% and that the door would reduce toxic organic emissions from that stack also by the same percentage via the prevention of the entry of furnace process exhaust gases into the hard lead ventilation system.

As presented in Appendix B, the emission reduction effectiveness of the isolation door, based upon the available data from testing conducted by Exide in August and September 2013, exceeded the 95% expectation for arsenic and toxic organic emissions from the Hard Lead stack. Most importantly, based on preliminary testing all risk metrics are below the Rule 1402 Action Risk Levels following the installation of the isolation door, by a comfortable margin:

Maximum Exposed Individual Work cancer risk -	5.8 in one million	vs.	25
Maximum Exposed Individual Resident cancer risk -	2.1 in one million	vs.	25
Cancer Burden -	0.05	vs.	0.5
Maximum Chronic Hazard Index, Worker -	0.5	vs.	3
Maximum Chronic Hazard Index, Resident -	0.05	vs.	3
Maximum Acute Hazard Index, Worker -	0.1	vs.	3
Maximum Acute Hazard Index, Resident -	0.01	vs.	3

Exide has evaluated concepts for the replacement of the current isolation door with either a rotating airlock type of door or a “double door” that would never be open. Exide has studied the feasibility and potential benefits of upgrading the current isolation door to an air lock type, and Exide has reasonably determined that modifying the door is operationally infeasible and will likely not improve emissions reduction. As part of its analysis, Exide studied its other facilities. Exide’s facility in Canon Hollow, Missouri, has a blast furnace that is charged through a rotating drum type of isolation door. While that indicated that this was a possible approach worth considering, it has been determined that this type of door would not be readily transferrable to the Vernon configuration. The Missouri facility has a rather unique arrangement in that the facility is built on a hillside with significant elevation changes. The blast furnace’s feed room actually sits at a level even with the top of the blast furnace – at its charge point. This allows the front end loader in the feed room to simply drive over and drop the material directly into the rotating drum – there is no skip hoist needed given the elevation of the room. Integrating the rotating drum type of door with a skip hoist arrangement would be exceptionally complex and prone to mechanical failures. Further, the rotating drum type of feed door does not provide the “air lock” sought. In order to allow sufficient “play” in the rotating mechanism to avoid jams, Exide’s assessment is that the drum/door provides a constant seal, but one that is only about 90% effective (*i.e.,* it is not fully “air tight”). By comparison, the isolation door at Vernon is closed generally more than 95% of the time. We believe that emission reduction performance is better when the current isolation door is closed (95% of the time) as opposed to having a door that is only 90% effective all the time. That is, the current Vernon isolation door, for the unique Vernon arrangement, performs better than the rotating drum door at Exide’s Missouri facility.

Similarly, we do not believe that a double-door arrangement would be workable or more effective at the Vernon facility than the current isolation door. To accommodate a double-door system, the entire skip hoist feeding mechanism would have to be raised upward to provide the necessary spacing between the doors. Beyond this rearrangement challenge, we have great concern about the way such a double-door arrangement would eliminate the ability to observe

the bottom of the two doors to identify "snags" or other problems. Worse, it would be all but impossible to access the bottom of the two doors to clear snags or jams. Thus, again, we believe that the current single door arrangement is preferable and will prove most effective and reliable for its overall operational and emission-reduction function.

Further, this air-lock door measure is not appropriate in light of the other changes made to the RRP in response to AQMD comments. First, Exide is installing the new scrubber to address AQMD concerns regarding the primary capture of the blast furnace process gases – reducing the degree of "reliance" on the isolation door as desired by the AQMD. Second, Exide is proposing to route the hooding that would capture any gases getting past the isolation door through the new cartridge filter, RTO, and scrubber, providing the secondary level of fail-safe capture and control in a manner more reliable and effective than any upgrade to the isolation door itself. Third, Exide is proposing to enhance and tighten the enclosure within which the blast furnace sits in the facility to ensure that any gases escaping the door are, in fact, captured by this hooding around the top of the blast furnace and routed to the new a cartridge filter and RTO. All these measures in combination will address stated AQMD recommendations that all furnace process gases are contained or captured and routed through the intended APCS sequence (RTO, baghouse, and scrubber).

Rather than further pursue these possible different door configurations, Exide is pursuing the approach encouraged by AQMD in its October 24, 2013 letter to make fundamental ventilation improvements to reduce the degree of primary reliance on the door to prevent process gas escape. These improvements include increasing the capacity of the main furnace air pollution control system (APCS) (as recommended in item 2 of the AQMD letter of October 24, 2013) and installation of the blast furnace charge level sensor to insure maintenance of the thimble seal. Beyond these primary measures at prevention of escape, Exide is proposing to reroute the ventilation for the hoods that collect any gases that escape the isolation door through the blast furnace new RTO to subsequent final control by wet scrubbing. Further, as described above, Exide is proposing to upgrade the enclosure housing the blast furnace itself within the smelting building to essentially place the furnace within and under a hood that will ensure that any gases escaping the isolation door will, in fact, be captured and routed to the hoods that will now be vented to the RTO. This is one of several proposed measures that will aid in achieving the arsenic and organic mass emissions limits of amended Rule 1420.1.

In conclusion, Exide is not proposing installation of either a rotating drum mechanism or a double door because neither design is operationally feasible and neither design is necessary for emissions reduction. These were offered originally as possibilities to be evaluated, and Exide has done so and determined that they would not be as effective or reliable as the changes proposed for implementation. Exide is already in a position that achieves the Rule 1402 Action Risk Levels, yet it is also proposing extensive additional measures that address the issues associated with emissions from the blast furnace charging point in a more direct and robust manner. The proposals in the Revised Final RRP will reduce the reliance on the isolation door as a barrier to emissions by improving the basic draft of the main process APCS serving the blast furnace to achieve appropriate pressure within the furnace, exactly as requested by AQMD. Further, even after that is done, Exide is proposing to route all of the hooding at the top of the blast furnace through the RTO and wet scrubbing APCS. Thus, any gases that still might

escape the isolation door will be captured and routed through the desired APCS treatment. In this future configuration, any "enhancement" or upgrade to the isolation door itself would not result in any reduction of emissions over that already proposed, due to the secondary capture rerouting. This is a superior approach to having a "better door" because it renders the door itself superfluous.

As described above, Exide has concluded that there is the potential for unfilterable arsenic compounds to be generated during the addition of arsenic to refining kettles. It is important to note that the August and September 2013 testing programs included representative runs during which arsenic was added to kettles. Thus, while there is some unfilterable arsenic generated during this activity, the risks from the emissions are still below Rule 1402 requirements. Nonetheless, Exide has concluded that it will restrict the practice of arsenic addition to two specified refining kettles and the ventilation hooding for those kettles will be routed to a baghouse that is followed by the new blast furnace wet scrubber.

Remaining Risk Culpability and Contributors

The isolation door is a measure that has been implemented and is permanent, and its operation is already required by Title V permit. Its presence is required as of the date of preparation of this RRP analysis. We look next to what the risk "profile" from the facility is once the isolation door has the effect of bringing the Hard Lead stack performance into line. From that profile, we evaluate the spectrum of measures that could be employed to further reduce the post-isolation-door risks.

In particular, we present the following tabulations of the contributing sources and pollutants to the summary of risk metrics presented above and in Appendix B for the Post-isolation door case for the Maximally Exposed Individual Worker (MEIW), the highest risk scenario:

Table 1 Contributions to MEIW-Cancer Risk (contributions >1% listed)

By Chemical		
Chemical Name	Cancer Risk	Contribution
Cr(VI)	2.31E-06	40%
Arsenic	9.10E-07	16%
PCBs	7.86E-07	14%
Benzene	7.41E-07	13%
1,3-Butadiene	4.81E-07	8%
Lead	2.26E-07	4%
Cadmium	1.15E-07	2%
Naphthalene	1.04E-07	2%
Other Chemicals	1.17E-07	2%

Table 1 Contributions to MEIW-Cancer Risk (contributions >1% listed)		
By Source		
Source	Cancer Risk	Contribution
Feed Dryer Stack	1.71E-06	30%
RMPS Stack	1.22E-06	21%
Hard Lead Stack	9.83E-07	17%
MAC Baghouse Stack	5.89E-07	10%
Material Handling Stack	5.07E-07	9%
Soft Lead Stack	3.45E-07	6%
Neptune Stack	1.95E-07	3%
Other Sources	2.41E-07	4%
By Source and Chemical		
Chemical and Source	Cancer Risk	Contribution
Cr(VI) from RMPS Stack	1.14E-06	20%
PCBs from Feed Dryer Stack	6.10E-07	11%
Benzene from Feed Dryer Stack	5.45E-07	9%
Cr(VI) from MAC Baghouse Stack	4.65E-07	8%
1,3-Butadiene from Feed Dryer Stack	2.91E-07	5%
Arsenic from Hard Lead Stack	2.87E-07	5%
Cr(VI) from Material Handling Stack	2.38E-07	4%
Arsenic from Material Handling Stack	2.31E-07	4%
PCBs from Hard Lead Stack	1.75E-07	3%
Cr(VI) from Soft Lead Stack	1.74E-07	3%
1,3-Butadiene from Hard Lead Stack	1.67E-07	3%
Benzene from Hard Lead Stack	1.58E-07	3%
Arsenic from MAC Baghouse Stack	1.19E-07	2%
Cr(VI) from Neptune Stack	1.06E-07	2%
Cr(VI) from Hard Lead Stack	9.40E-08	2%
Other chemicals/sources	9.90E-07	17%
Total	**5.8E-06 or 5.8 in a million**	**100%**

Several conclusions regarding potential further risk reduction are drawn from the above "culpability" tabulations:

- While calculated cancer risk from arsenic remains one of the principal contributing pollutants, the sources of arsenic contributing to the remaining, or "residual" risk, after the effect of the isolation door are more diffuse, involving more sources, and
- Calculated cancer risk from organic toxic air contaminants accounts for about 38% of this residual risk.

The diffusion of risk among the sources and pollutants leads to an analysis of finding where additional controls on particular sources would have the most effect.

Potential Further Controls

Initially, we considered reducing this MEIW maximum risk by the implementation of Wet Electrostatic Precipitation (WESP), a technology mentioned by AQMD for consideration in its March 1, 2013 HRA approval letter and its October 24, 2013 RRP rejection letter. WESP has proven to be able to achieve very low emission rates of toxic metals, but at very high cost and physical space requirements. The WESP technology has been employed at another lead recycling facility in Southern California on sources that are analogous to the following stacks at the Exide Vernon facility, listed with their associated risk contribution from all metals to the 5.8 in a million combined MEIW risk after installation of the isolation door.

Table 2 MEIW Cancer Risks of Metal Emissions from Four Exide Stacks

Source	Combined MEIW risk, all metals
Neptune Stack	1.51E-07
Hard Lead Stack	4.37E-07
Soft Lead Stack	2.51E-07
Feed Dryer Stack	2.01E-07
Total	**1.04E-06 or 1.04 in a million**

This analysis assumes that a WESP would be 95% effective in reducing toxic metal emissions. Installation of the 215,000 cfm system (compared to Quemetco's significantly smaller system size of approximately 100,000 cfm) that would be necessary to control the above-listed sources would have the effect of reducing the MEIW risk by 0.99 in a million, taking the facility-wide total down to 4.8 in a million, a 17% reduction in the overall risk from the facility. Even if the WESP were perfect in eliminating 100% of the metals emissions from these four stacks, the risk reduction at the MEIW would be 1.04 in a million.

This reduction would have a capital cost on the order of $30 million based upon both Environmental Protection Agency (EPA) cost estimation data from the development of the revised National Emission Standards for Hazardous Air Pollutants (NESHAPS) for this industry and updated cost information presented in the "Feasibility Study, SCAQMD Rule 1420.1(o)" of

August 2011 included as Appendix C to this report. Further, as presented in Appendix C, space constraints essentially preclude the installation of such a system at the Exide Vernon facility. EPA directly considered and rejected the imposition of WESP controls as existing or new source MACT in the recent revision to the NESHAP for this industry – a decision recently upheld by a federal appeals court.

While the Appendix C Feasibility Study was directed at the question of lead emission control, the conclusions are based on the Exide facility itself. Whether it is for the control of lead or of arsenic, we describe above the theoretical effect of the WESP being 100% effective for ALL metals and still find the incremental risk improvement at the Exide facility to be only 1.04 in a million. This small incremental risk improvement, mainly from arsenic emission reductions, would still be at extremely high cost. Further, there is insufficient space at the Exide facility to accommodate the WESP system. AQMD statements in a recent document supporting the pending Rule 1420.1 rulemaking suggest that Exide place a WESP at the current location of the facility's storm water pond. That pond cannot simply be filled in and eliminated. The storm water pond is an integral part of the facility's environmental controls and a unit under Department of Toxic Substances Control permitting authority. For further details in this regard, please refer to Exide's November 8, 2013 CEQA comments regarding Proposed Amended Rule 1420.1.

In contrast, rather than mandating WESP control, we explore the specific risk drivers (pollutants and sources) making up the residual risk at the Exide Vernon facility and then consider potential technological and cost-effective alternative measures to further reduce that risk to levels akin to what a WESP could potentially provide.

Control of Toxic Organic Emissions

First, we address the residual risk posed by organic toxic emissions, noted above to comprise about 38% of the residual MEIW risk. In turn, 70% of this toxic organic contribution to the MEIW risk is from the Feed Dryer stack, at about 1.5 in a million risk. The cost to control emissions from a given source is directly proportional in large part to the airflow of the source – handling more flow requires larger devices. In the case of organic pollution control devices, typically thermal oxidizers, operating costs (in fuel) will also increase greatly when handling larger flows. In this case controlling organic emissions from the feed dryer stack is particular attractive in that it is a relatively small air flow rate (15,000 cfm) contributing 70% of the organic risk.

Beyond the afterburners and inherent reverberatory furnace heat that control toxic organics from the direct furnace process emissions, per the NESHAP for this industry, only one other source that has ever been fitted with toxic organic air pollution control devices, which was for a reverberatory furnace Feed Dryer.

Given this example and the ability to get the most risk reduction from the smallest flow, Exide proposes and commits to the installation of an RTO on the exhaust of its Reverberatory Furnace Feed Dryer. Assuming a nominal 90% expected destruction efficiency, this would reduce facility risk at the MEIW by 1.4 in a million. Order of magnitude estimated capital cost for this unit is $1 million. Exide expects to be able to have this unit installed in the first quarter of 2015, contingent upon AQMD permitting, procurement, and installation.

Control of Toxic Metal Emissions

As stated above, the WESP technology is not feasible for either lead or arsenic control at the Exide Vernon Plant. [See Appendix C]. Looking beyond WESP toward technologies that are feasible for further improving emissions of toxic metals, Exide notes that the best-controlled facilities in the industry have deployed or are deploying secondary filtration devices downstream of the primary dust collection baghouses in the form of HEPA filters. The degree of emission reduction that can be achieved by HEPA filters on this industry's stack emissions is unclear and expectations vary widely. While HEPA filters are rated by definition to filter 99.97% of particles at a 0.3 micron size, it is not appropriate to assume or estimate that placing a HEPA filter downstream of a fabric filter or cartridge collector will reduce metal emissions by a further 99.97%. This is because some relatively significant fraction of the metal emissions exiting a fabric filter will be in the "condensable" size range, that is, material that passes through the filter in the stack testing apparatus and subsequently caught in the wet impingers in the test train. Material small enough to pass through the stack testing filter is also small enough to pass through a HEPA filter. EPA, for example, found in its analysis of the industry's emission data that "HEPA filters used downstream of a baghouse achieve approximately 20 percent lower outlet concentrations than baghouses alone." [Docket ID No. EPA-HQ-OAR-2011-0344 item 0055, page 5]. The AQMD established a higher range of expectation in its calculation of the expected improvement from installing HEPA filters downstream of the Exide Vernon facility's cartridge collectors. The District estimated that such installation would reduce lead emissions by 70.8% and result in outlet lead concentrations downstream of the HEPA filters of 2.715 microgram per dry standard cubic meter (µg/dscm). [see document "HB3151-25 Excess Emissions" from Case 3151-25, attached as Appendix F to the Feasibility Study in Appendix C] In the case of the remaining arsenic emissions from the Hard Lead stack, preliminary engineering testing conducted on April 19 after the installation of the isolation door found outlet arsenic to be more than 50% in the filterable fraction, consistent with the filterable fraction of lead. To the extent we can expect lead improvement in the 20 to 70% range, these comparisons of filterable fraction composition for arsenic lead us to also expect arsenic improvement in the same range. Based upon that fraction, we expect metals improvement on the order of 50% nominally for stacks fitted with secondary HEPA filters.

This facility has already installed secondary HEPA filters on the MAPCO battery breaker demister (in place for the AB2588 testing and already reflected in the January 2013 HRA), the Feed Dryer stack, the Material Handling Baghouse Stack, and the North and South Torit stacks (none of these improvements reflected in the January 2013 HRA). Exide additionally proposes and commits to installing secondary HEPA filters on all other stacks at its facility, other than the Neptune Scrubber stack which already has the inherent secondary filtration effect of the wet scrubber downstream of its associated baghouses. This would add secondary HEPA filtration to the Hard Lead, Soft Lead, and MAC stacks.

The risk contributions at the MEIW remaining after the isolation door improvement for each of these stacks for which HEPA improvement is not already accounted for in the January 2013 HRA are:

Table 3 MEIW Risks of Metal Emissions from Eight Exide Stacks	
Source	**Combined MEIW risk, all metals**
Material Handling Stack	5.07E-07
Hard Lead Stack	4.37E-07
Soft Lead Stack	2.51E-07
Dryer Stack	2.01E-07
MAC Baghouse stack	5.88E-07
North Torit Stack	7.92E-08
South Torit Stack	5.77E-08
Total	**2.1E-06 or 2.1 in a million**

A fifty percent reduction in the metals emissions from these stacks via HEPA filtration would reduce MEIW risk by about 0.7 in a million. Of this improvement, some is from units already installed but not yet tested. The proposal going forward is to install HEPA units on three additional stacks (Hard Lead, Soft Lead, and MAC) each of roughly 100,000 cfm nominal capacity. Based on Exide experience with the installation of the similarly sized units downstream of the Torit cartridge collectors, Exide expects cost on the order of $350,000 per unit, or $1.1 million in the aggregate for three.

The effectiveness of the HEPA filters proposed is enhanced by the measures proposed by Exide which will route those source points having the potential to give rise to unfilterable arsenic emissions to and through the wet scrubbing system rather than the baghouses that would be secondarily HEPA-controlled. That is, we have greater assurance that the above-described improvements related to secondary HEPA installation will be achieved because the following source points will be routed to the wet scrubbing system:

Two refining kettles to which arsenic addition will be restricted (AQMD October 24, 2013 letter, Item 3)

Hooding from the top of the blast furnace, which collect emissions potentially escaping from the charge chute. (AQMD October 24, 2013 letter, Item 3)

Hooding from the blast furnace slag tap.

Testing of the Torit systems by AQMD contractor on September 20, 2013 did not detect arsenic emissions and, hence, no arsenic detected in the unfilterable phase. Pressures were positive in BOTH furnaces during this testing. Testing of the Torit systems by Exide's contractor in October and November 2013 only found detectable arsenic emissions during one test run on the South Torit, but all the detected arsenic was in the filterable fraction.

Testing of the Soft Lead stack, August 2013, found no arsenic in the gaseous or unfilterable catch – indicating that unfilterable arsenic is not an issue from this stack. Note that the pressures in the reverberatory furnace were POSITIVE in this testing. Hence, there is no proposal to route any soft lead system hooding to wet scrubbing.

The remaining items routed to the Hard Lead System (the balance of refining kettles and hooding of the lead tap) will not contain unfilterable arsenic. There is no indication that unfilterable arsenic evolved in the blast furnace would migrate downward against the blast tuyere pressure to reach the lead tapping point. The blast furnace lead tapping point does not provide a conduit to the internal furnace atmosphere – it is an "underwell" point such that the opening is always filled with molten metal. In addition, the molten slag layer lies above the molten lead. In tests of separate Hard Lead Ventilation System duct branches in April 2013, no unfilterable arsenic was detected in the tested branch serving the lead tap hood.

Exide will install the secondary HEPA filters on the remaining units by the first quarter of 2015, subject to AQMD permit approval.

Overall Reductions

In further reducing the residual risk remaining after the installation of the isolation door at the MEIW (now estimated at 5.8 in a million), the following reductions are expected from the further incremental controls proposed:

Installation of RTO on Feed Dryer	1.4 in a million reduction
Installation of Secondary HEPAs	0.7 in a million reduction
Total	2.1 in a million reduction

Two important points are to be made regarding this proposed degree of further improvement:

- The expected level of risk remaining after the installation of the isolation door is already below the Rule 1402 Action Risk Levels before implementation of any of these additional measures and their associated further reductions, and
- The level of incremental MEIW risk reduction from the proposed suite of additional measures of 2.1 in a million is better than the result that would be achieved by implementation of a WESP on those same source types as the other facility in this industry in Southern California.

6 Specification of Risk Reduction Measures [(f)(3)(E)]

The basic specifications of the measures proposed for achieving compliance with the Action Risk Levels are as follows:

The blast furnace feed chute isolation door, which is already permitted, installed, and operating, is designed to provide an effective barrier to the passage of blast furnace process gases out through the furnace charge chute when closed. Its system includes an actuator system that drives the door opening and closing in conjunction with passage of the feed skip hoist over the chute to allow charging. This actuation is also fitted with a recorder to log its activity.

Installation of the second furnace process Venturi scrubber APCS will allow for the draft to the two smelting furnaces to be managed independently. The primary design specification for this new system arrangement will be to achieve and maintain a negative internal pressure of at least 0.02 inches of water in each furnace on a 30-minute average basis.

The RTO for control of organic toxic emissions from the feed dryer will be specified to the potential vendors to achieve a destruction efficiency of the key risk-driving organic emittents (benzene, 1,3-butadiene, and PCB's) of at least 90 percent. Exide and ENVIRON expect that this level of performance will be achieved by an RTO having basic specifications of residence time in the 0.3 to 1.3 seconds range with temperatures between 1400 and 1500 degrees F. Details will be refined through vendor interaction to seek the 90 percent destruction target.

The secondary HEPA filters to be installed will meet the standard HEPA specification of 99.97% efficiency at 0.3 microns.

More detailed specifications were provided with the air permit application for the feed chute isolation door submitted on March 7, 2013 and approved by AQMD on March 28, 2013. Additional detail and specification of the proposed RTO and secondary HEPA filtration units will similarly be provided with the air permit applications seeking approval for their installation.

Design activities for the rearrangement of the main process APC systems to add the additional wet scrubber and the blast furnace charge hood RTO will result in additional specification development which will be passed on as available and comprehensively summarized in the air permit applications for their installation.

7 Schedule [(f)(3)(F)]

Exide believes that the installation of the blast furnace feed chute Isolation Door has already been effective to a degree sufficient to bring the health risks below the Rule 1402 Action Risk Levels. Exide is proceeding with design of the RTO and secondary HEPA installations and will be submitting permit applications for their construction in an expedited fashion.

Exide understands the District's request for a schedule reflecting completion dates within a time window after permits are issued. While Exide respects the District's role and acknowledges that permit applications require time and effort to review, based on the time that the District has had to review the HEPA permit applications submitted last November (Exide has promptly responded to all District information requests regarding these applications but Exide still has no permits to construct), Exide is legitimately concerned that the District may not issue permits in a timely enough manner to allow Exide to achieve its aggressive project schedule. In order to satisfy all District Rules, Exide is targeting completion of these projects in the first quarter of 2015. Because of their complexity and in order to ensure safe and effective installation, all of these projects need to be well coordinated and many must be scheduled during planned facility shutdowns. Exide will continue to work diligently with the District on permitting issues, and Exide refines the schedule previously set forth in Section 7 of the previously approved March 2014 RRP:

Details of the scheduled activities are below. Certain dates and projects are subject to reasonable modification for design refinement, and dates may be delayed by contingencies outside Exide's reasonable control. Where applicable, the procurement and installation cycle durations are given to indicate the time windows after an assumed SCAQMD permit issuance in mid-October 2014 by which installation can be completed.

Submit air permit applications for secondary HEPA on Hard Lead and Soft Lead baghouses	Submitted 11/14/13
Submit air permit applications for secondary HEPA on MAC baghouse	Submitted 11/14/13
Submit air permit application for RTO on Feed Dryer	Submitted 1/7/14
Submit air permit application for change of reverb feed system	Submitted 1/7/14
Complete design of main APCS scrubbing system addition, afterburner modification, and rerouting of various hard lead system hoods to that new scrubbing system	3/28/14
Submit air permit applications for all aspects of this fundamental APCS rearrangement	4/10/14
Install charge level and temperature sensors in blast furnace	**1/1/15**

Install screw feeding system on reverb furnace **1/1/15**

Complete installation of secondary HEPA on Hard Lead and Soft Lead baghouses **4/15/15**

- (assumes issuance of SCAQMD permit by October 15, 2014)

Complete installation of secondary HEPA on MAC baghouse **4/15/15**

- Delivery of unit duration 11 weeks from permit issuance
- 1 week installation duration
  - Minimum total elapsed from presumed 10/15/14 permit issuance = 1/15/15

Complete installation of RTO on Feed Dryer **4/15/15**

- Delivery of unit duration 14 weeks from permit issuance
- 2 week installation duration
  - Minimum total elapsed from presumed 10/15/14 permit issuance = 2/15/15

Complete installation of new APCS scrubbing system, RTO modification, and rerouting of hard lead system hoods and refining kettles to repurposed baghouse **4/15/15**

- Delivery of new scrubber 18 weeks from permit issuance
- 3 week installation duration
  - Minimum total elapsed from presumed 10/15/14 permit issuance = 3/15/15

Exide is working to expedite all activities in this schedule. Procurement and fabrication of custom air pollution control equipment generally governs the timing.

Per the March 1, 2013 letter approving the January 2013 HRA, Exide is not eligible for time extension, and Section (f)(3)(G) is, therefore, not applicable.

8 Estimation of Post-Implementation Risk [(f)(3)(H)]

Exide has projected the facility-wide risk that would remain after the implementation of all the above-described measures: the blast feed chute isolation door, feed dryer RTO, and secondary HEPA filtration on all sources other than the Neptune Scrubber exhaust, and expansion of the main process APCS scrubbing system. This assessment is presented in Appendix D. A summary of the key results metrics are as follows:

Maximum Exposed Individual Work cancer risk -	3.7 in one million
Maximum Exposed Individual Resident cancer risk -	1.2 in one million
Cancer Burden -	0.005
Maximum Chronic Hazard Index, Worker -	0.4
Maximum Chronic Hazard Index, Resident -	0.04
Maximum Acute Hazard Index, Worker -	0.1
Maximum Acute Hazard Index, Resident -	0.008

Following installation of all prescribed measures described in this RRP, Exide would conduct testing simultaneously for metals and Method TO-15 organics (inclusive of at least benzene and 1,3-butadiene) on five stacks (hard lead, soft lead, process scrubber stack (both scrubber exhausts combined), North Torit, and South Torit) to verify final risks (AQMD October 24, 2013 letter, Item 7).

Appendix A

May 2, 2013 Memorandum on Preliminary Testing

ENVIRON

MEMORANDUM

TO: Exide Technologies

FROM: Russell S. Kemp, PE
Principal

DATE: May 2, 2013

RE: Assessment of Effectiveness of Blast Furnace Isolation Door
Vernon, California, Facility

As requested, we have conducted an evaluation of the effectiveness of the blast furnace charge chute isolation door installed at the Exide Technologies facility in Vernon, California, in terms of reducing emissions from the Hard Lead Ventilation System stack and reducing overall calculated facility risk. Based upon the details and analysis provided below, we conclude that the isolation door has been effective in its intended purpose and has resulted in reducing the overall calculated facility risks to below the Action Risk Levels specified in South Coast Air Quality Management District (AQMD) Rule 1402, which implements the AB2588 air toxics program. This conclusion is based upon preliminary engineering test data collected on April 9, 10, 18, and 19, 2013 subsequent to the installation of an isolation door on the blast furnace charge chute. These test data have been shared with the AQMD and are subject to confirmation through further detailed emission testing specified in the air permit for the installation of the isolation door issued on March 28, 2013. It is our opinion that these confirmatory official tests will confirm the findings and conclusions presented in this memorandum.

Background

On March 1, 2013, AQMD issued its approval of the AB2588 Health Risk Assessment (HRA) prepared by ENVIRON International Corporation (ENVIRON) and submitted in January 2013. That HRA was prepared in accordance with protocols approved by AQMD with DTSC in a consultative role and is based upon emissions data collected in testing conducted in 2010 and 2012. As summarized in the AQMD letter of March 1, 2013 the calculated health risks exceeded the Public Notice thresholds and Action Risk Levels in AQMD Rule 1402 which implements AB2588.

The primary driver of risk in this HRA was the impact of arsenic emitted from the facility's Hard Lead Ventilation System stack. This ventilation system is comprised of ductwork serving a number of hoods intended to collect metal-bearing dust at points of potential worker exposure around the facility's blast furnace and the refining kettles associated with that furnace. The air collected at these hoods is filtered in a baghouse to remove metals prior to discharge to the atmosphere. Through evaluations performed in 2011 and 2012 it was determined that blast furnace process exhaust was making its way into some of the hooding around the furnace charge chute rather than being confined to its intended path through the furnace afterburner, blast furnace baghouse, and wet scrubber. Operational improvements implemented in 2012 were successful in reducing arsenic emissions from the Hard Lead Ventilation System stack by approximately 70% from that measured in 2010. The HRA submitted in January 2013 and approved on March 1, 2013 was based upon the average of the 2010 and 2012 test results for this stack.

In order to more reliably preclude the entry of blast furnace process exhaust into the Hard Lead Ventilation System, Exide designed an isolation door system for the charge chute which would

ENVIRON International Corp. 1600 Parkwood Circle, Suite 310, Atlanta, GA 30339
V +1 770.874.5010 F +1 770.874.5011

environcorp.com

provide a more direct and positive barrier for containing the process exhaust gases in the furnace as desired. The AQMD approved a permit application for the installation of this isolation door on an expedited basis on March 28, 2013 and the installation of the door was completed on April 4, 2013.

Testing

ENVIRON developed a testing program for the evaluation of the effectiveness of the isolation door which was shared with AQMD. Emissions testing on the Hard Lead Ventilation System stack commenced on April 9, 2013 with ENVIRON personnel in attendance for all testing. As testing progressed over subsequent days, AQMD personnel observed some of the tests and splits of the physical samples collected by Almega were delivered to the AQMD's laboratory. Preliminary results from the testing were transmitted to AQMD by Almega simultaneously with delivery to ENVIRON and Exide.

Three 2-hour duration tests were conducted on April 9, 2013. At this stage, the isolation door was newly installed and still in a "debugging" mode of operation. Notably, the mechanism experienced jams resulting in leakage, especially during the third run. A single 4-hour duration test was conducted on April 10, 2013. Operation of the door was more steady during this run.

Subsequent to the testing on April 9 and 10, the facility made further improvements to the door mechanism. Four-hour tests on the Hard Lead Ventilation System exhaust were conducted on April 18 and 19. During the testing on the 18th, arsenic was added directly to one of the refining kettles served by the Hard Lead Ventilation System to assess the potential for that activity to affect emissions.

The preliminary results from these four days of testing are presented in **Table 1**. In that Table we also present, for reference, the prior results for arsenic, benzene, and 1,3-butadiene from this stack from 2010 and 2012 which formed the basis of the approved January 2013 HRA. We also compare the emission results obtained since installation of the isolation door with these prior data. As noted above, the reduction in arsenic emissions achieved by operational adjustments between 2010 and 2012 was 70%. The recent data indicate a further reduction beyond the 2012 improvement on the order of 98%. Comparable levels of improvement are also seen in the emissions of benzene and 1,3-butadiene, both of which would be associated with furnace process gases, further demonstrating the effectiveness of the isolation door in minimizing the escape of process gases into the Hard Lead Ventilation System.

Risk

To evaluate the impact of these emissions improvements on calculated risk, we substituted these new emission data for arsenic, benzene, and 1,3-butadiene from the Hard Lead Ventilation System stack into the same HRA protocol and calculation approach as used in the HRA approved on March 1, 2013. That is, we reassessed facility-wide risk including all the other stacks and pollutant data just as they were in the January 2013 HRA with the only adjustment being these alternate emission data from the Hard Lead Ventilation System stack. Results of these analyses are also presented in **Table 1**.

Based upon the April 10, 2013 emission data, highlighted in pink in Table 1, calculated risks are all below the Rule 1402 Action Risk Levels. Residential and sensitive receptor (e.g., schools) cancer risks are all less than 5 in a million. The maximum worker cancer risk is only slightly above 10 in a million.

As stated above, improvements were made to the isolation door system between the testing conducted on April 10 and April 18. The testing conducted on April 18 also had the diagnostic purpose of assessing the potential remaining influence from the addition of arsenic into a refining kettle to adjust alloy specification – an activity typically performed on only a handful of kettle batches each week. Arsenic emissions from the Hard Lead Ventilation System stack were, indeed, higher on April 18 than on the 10th or 19th, but still 98% less than the arsenic emission rate used in the January 2013 HRA. In addition, the 1,3-butadiene emission rates on the 18th and 19th were a factor of ten lower than those measured on April 10, indicating that the door function was improved between the 10th and 18th. Arsenic emissions on the 19th were also substantially lower than those seen during the first week of testing on the 9th and 10th.

A second set of risk calculations was run using the average rates from April 18th and 19th as inputs. This combination is believed to be a conservative projection of the emissions that would be expected during the official testing series which will involve three 8-hour tests. These risk calculations, again simply substituting in data in Table 1 for the Hard Lead Ventilation System stack with all other inputs as they were in the approved January 2013 HRA, indicate essentially the same results as the scenario from the April 10 data. That is, any elevation in arsenic emissions resulting from the occasional addition of arsenic to a refining kettle for alloy adjustment was offset by the further reductions in 1,3-butadiene emissions achieved by the improvements to the isolation door mechanism after April 10.

Results of the Hard Lead Ventilation System stack testing reflect that only one receptor has a calculated cancer risk above 10 in a million and that is the same receptor that had a calculated cancer risk of 156 in a million in the January 2013 HRA.

Most significantly, all these calculated risks based on preliminary emissions testing since the installation of the isolation door meet the risk reduction Action Risk Levels specified in AQMD Rule 1402 of 25 in-a-million cancer risk, hazard index of 3, and cancer burden of 0.5 by a wide margin. It is our opinion that based on these preliminary results, no further risk reduction will be necessary to satisfy Rule 1402.

Summary and Next Steps

It is our understanding that AQMD is reviewing these preliminary test data. In addition, as noted above, the air permit issued on March 28, 2013 calls for triplicate emissions tests conducted simultaneously on the Hard Lead Ventilation System stack and the Neptune Scrubber stack (through which the blast furnace process gases exhaust) to be conducted before August 2, 2013. Given the breadth of the preliminary engineering testing conducted thus far, we believe that the emissions to be measured during these pending tests will be less than the average rates from April 18th and 19th. That is, it is our expectation that the pending official permit-required testing will confirm the analysis contained herein, likely with emissions and risks below those presented.

Table 1 **Comparison of Hard Lead System Test Data**

Green = ND value entered at detection limit

INITIAL THREE RUNS, 09 April 2013

	2008 lb/hr	2010 lb/hr	2012 lb/hr	%Reduction 2012 v. 2010	2010-2012 avg. used in HRA	4/9/13 Run 1	4/9/13 Run 2	4/9/13 Run 3	4/9/2013 Average	4/9/2013 avg %Reduction from 2010	4/9/2013 avg %Reduction from 2012	4/9/2013 avg %Reduction from HRA
Arsenic	8.50E-04	0.0759	0.0210	72%	0.0486	0.00032	0.00063	0.0031	0.00135	98.2%	93.6%	97.2%
Benzene		1.41	0.531	62%	0.97	0.011	0.0185	0.045	0.02483	98.2%	95.3%	97.4%
1,3-Butadiene		0.345	0.15	57%	0.248	0.0012	0.0017	0.013	0.00530	98.5%	96.5%	97.9%

DETINNING TREATMENT, 10 April 2013

	2008 lb/hr	2010 lb/hr	2012 lb/hr	%Reduction 2012 v. 2010	2010-2012 avg. used in HRA	OUTLET 4/10/2013 lb/hr	4/10/2013 %Reduction from 2010	4/10/2013 %Reduction from 2012	4/10/2013 %Reduction from HRA
Arsenic	8.50E-04	0.0759	0.0210	72%	0.0486	4.00E-04	99.5%	98.1%	99.2%
Benzene		1.41	0.531	62%	0.97	0.045	96.8%	91.5%	95.4%
1,3-Butadiene		0.345	0.15	57%	0.248	0.019	94.5%	87.3%	92.3%

Substituted in for Hard Lead stack with all other inputs same as January 2013 HRA

Purple font indicates value above Notification Threshold
Red font indicates value above Risk Reduction Action Level

MEIW max Worker Cancer Risk	1.07E-05	at receptor 1005
MEIW max Worker Chronic Hazard Index	1.23	at receptor 1005
Acute Hazard Index Max Worker	0.438	at receptor 80
MEIR max Resident Cancer Risk	3.48E-06	at receptor 1016
MEIR max Resident Chronic Hazard Index	0.128	at receptor 1016
Max School Cancer Risk	2.59E-06	Salazar Park Head Start
Max School Chronic Hazard Index	0.1	Salazar Park Head Start
Cancer Burden	0.315	

ARSENIC ADDITION IN REFINERY, 18 April 2013

	2008 lb/hr	2010 lb/hr	2012 lb/hr	%Reduction 2012 v. 2010	2010-2012 avg. used in HRA	OUTLET 4/18/2013 lb/hr	4/18/2013 %Reduction from 2010	4/18/2013 %Reduction from 2012	4/18/2013 %Reduction from HRA
Arsenic	8.50E-04	0.0759	0.0210	72%	0.0486	1.16E-03	98.5%	94.5%	97.6%
Benzene		1.41	0.531	62%	0.97	0.0385	97.3%	92.7%	96.0%
1,3-Butadiene		0.345	0.15	57%	0.248	0.0017	99.5%	98.9%	99.3%

TYPICAL OPERATIONS, 19 April 2013

	2008 lb/hr	2010 lb/hr	2012 lb/hr	%Reduction 2012 v. 2010	2010-2012 avg. used in HRA	OUTLET 4/19/2013 lb/hr	4/19/2013 %Reduction from 2010	4/19/2013 %Reduction from 2012	4/19/2013 %Reduction from HRA
Arsenic	8.50E-04	0.0759	0.0210	72%	0.0486	2.10E-04	99.7%	99.0%	99.6%
Benzene		1.41	0.531	62%	0.97	0.0073	99.5%	98.6%	99.2%
1,3-Butadiene		0.345	0.15	57%	0.248	0.0012	99.7%	99.2%	99.5%

Average of results from 18 and 19 April

	2008 lb/hr	2010 lb/hr	2012 lb/hr	%Reduction 2012 v. 2010	2010-2012 avg. used in HRA	OUTLET 18 & 19 avg lb/hr	4/19/2013 %Reduction from 2010	4/19/2013 %Reduction from 2012	4/19/2013 %Reduction from HRA
Arsenic	8.50E-04	0.0759	0.0210	72%	0.0486	6.85E-04	99.1%	96.7%	98.6%
Benzene		1.41	0.531	62%	0.97	0.0229	98.4%	95.7%	97.6%
1,3-Butadiene		0.345	0.15	57%	0.248	0.00145	99.6%	99.0%	99.4%

Substituted in for Hard Lead stack with all other inputs same as January 2013 HRA

Average of 4/18 and 4/19	
Arsenic	6.85E-04
	lb/hr
Benzene	2.29E-02
1,3-Butadiene	1.45E-03

Purple font indicates value above Notification Threshold
Red font indicates value above Risk Reduction Action Level

MEIW max Worker Cancer Risk	1.11E-05	at receptor 1005
MEIW max Worker Chronic Hazard Index	1.59	at receptor 1005
Acute Hazard Index Max Worker	0.438	at receptor 80
MEIR max Resident Cancer Risk	3.50E-06	at receptor 1016
MEIR max Resident Chronic Hazard Index	0.144	at receptor 1016
Max School Cancer Risk	2.44E-06	Salazar Park Head Start
Max School Chronic Hazard Index	0.106	Salazar Park Head Start
Cancer Burden	0.322	

Appendix B

Updated Emissions Inventory and Health Risk Assessment

Appendix B

Updated Health Risk Assessment

ENVIRON prepared this updated health risk assessment (HRA) to provide risk metrics reflecting the effects of the isolation door installed on the charge chute to Exide's blast furnace. The door was to minimize the potential for blast furnace process exhaust gases to be drawn into the hooding for the Hard Lead Ventilation System (Hard Lead). This updated HRA used the source test results obtained from the Hard Lead, the Soft Lead Ventilation System (Soft Lead), and the Neptune Scrubber (Neptune) stacks on various days in August and September 2013. The source tests were conducted by Almega Environmental and Technical Service (Almega) for Exide. This updated HRA also includes the source test results obtained from the North and South Torits stacks on September 20, 2013. The source tests were conducted by Almega for AQMD.

The toxic air contaminant (TAC) emissions used in this update are described in Section B.1 below. ENVIRON used the same air modeling and risk assessment methodologies as those in the approved January 2013 HRA. A brief summary of our methodologies is included in Section B.2 below. Section B.3 describes the health risk results. The results from this HRA showed that the isolation door was effective in reducing the emissions.

B.1 Updated TAC Emissions

The TAC emissions from the source tests, which were used to calculate the health risk metrics, are summarized in Tables B-1 through B-4 for Hard Lead, Soft Lead, Neptune, and the North and South Torits. The changes in the emission rates compared with those in the approved January 2013 HRA are also presented in Tables B-1 through B-4, expressed as reduction and percent reduction.

For the metals that were below the laboratory's reporting limits in the August/September 2013 source tests, and instead of using "zero" as the emission rate, ENVIRON used the following hierarchy to select a non-zero emission rate:

1) If the emission rate in the January 2013 HRA is lower than the reporting limit in the August/September 2013 source test, we used the value in the January 2013 HRA;

2) If a particular metal was not detected in any of the source tests, we used the lowest laboratory reporting limit as the emission rate.

For the organics that were below the laboratory's reporting limits in the August/September 2013 source tests, zero emissions were used if the organic compound was also below the reporting limits in the 2010 and 2012 source tests. This approach is consistent with the CARB Emission Inventory Criteria and Guidelines[2]. If the organics were reported with non-zero emissions in the approved January 2013 HRA, the lower of the reporting limit in the August/September 2013 test and the reported value in the approved January 2013 HRA was used.

[2] State of California Air Resources Board (CARB), 2007: Emission Inventory Criteria and Guidelines for the Air Toxics "Hot Sports" Program. August.

An updated facility-wide TAC emission inventory is provided in Table B-5, which incorporates the August and September 2013 source test results. Entrained paved road dust emissions were revised slightly by using the k factor for PM10 instead of PM30 (AP-42 Section 13.2.1). Air toxic emissions not mentioned above remain the same as those in the approved January 2013 HRA.

B.2 Modeling and Risk Assessment Methods

This updated HRA repeated the risk calculations in the approved January 2013 HRA. Emission sources included all nine stacks of the manufacturing processes and two stacks for the natural gas water heaters as point sources, as well as the area sources representing the onsite entrained road dust. ENVIRON updated the emission data in the approved January 2013 HRA with those listed in Tables B-1 through B-4.

ENVIRON used the same XOQ files that were generated for the approved January 2013 HRA in this updated HRA. The regulatory default options were used to generate the XOQ values using Breeze AERMOD version 7.6 (EPA AERMOD version 12060). The source parameters were based on the source test reports that were used in the approved January 2013 HRA. The receptor grid covers a 3,600-square-kilometer area surrounding the facility, and census block receptors were identified within this area using United States Census Bureau data. ENVIRON obtained the meteorological data for the Central Los Angeles station from the South Coast Air Quality Management District (SCAQMD)'s website for the years of 2006 and 2007. The elevations for the sources and receptors were extracted from the National Elevation Datasets (NED) on the United States Geological Survey's (USGS) website. The modeling used the Universal Transverse Mercator (UTM) system of coordinates and the World Geodetic System 1984 (WGS84) spheroid.

ENVIRON used HARP (version 1.4f) to calculate the health risks, which is the same version that ENVIRON used for the approved January 2013 HRA and the currently available version on the California Air Resources Board (CARB)'s website. An updated HARP Health Value Database was released by CARB on August 1, 2013. This new database contains updated health values for 1,3-butadiene adopted by OEHHA and was used in this updated HRA. The newly adopted values are: 2 $\mu g/m^3$ (chronic REL) and 660 $\mu g/m^3$ (acute REL), compared to the 20 $\mu g/m^3$ (chronic REL) and no acute REL previously.

ENVIRON used the same risk calculation parameters as those in the approved January 2013 HRA, which followed the OEHHA Air Toxics Hot Spots Program Guidance Manual for Preparation of Health Risk Assessment and the SCAQMD's Supplemental Guidelines for Preparing Risk Assessments for the Air Toxics "Hot Spots" Information and Assessment Act.

B.3 Risk Estimates

The cancer risk at the Maximally Exposed Individual Worker (MEIW) is estimated to be 5.8 in a million or 5.8E-6 (vs. 156 in a million prior to the isolation door installation). The MEIW is at Receptor 1005 (389900, 3763600) and is located in the railyard north of the facility (see Figure B-1). The cancer risk at the Maximally Exposed Individual Resident (MEIR) is estimated to be 2.1 in a million or 2.1E-6 (vs. 22 in a million prior to the isolation door installation). The MEIR is at Receptor 1016 (389900, 3764700) and is located in the residential area north of the facility

(see Figure B-2). Both maximum cancer risks are below the SCAQMD Rule 1402 Action Level of 25 in a million and public notification threshold of 10 in a million.

The cancer burden is estimated to be 0.05, which is below the SCAQMD Rule 1402 Action Level of 0.5. The cancer burden in the January 2013 HRA was 10.

The maximum Chronic Hazard Index (CHI) for the worker scenario is estimated to be 0.5 (vs. 63 previously) and is at the same location as the MEIW (see Figure B-1). The maximum CHI for the residential scenario is estimated to be 0.05 (vs. 2.9 previously) and at the same location as the MEIR (see Figure B-2). Both CHIs are below the SCAQMD Rule 1402 Action Level of 3.0 and public notification threshold of 1.0.

The maximum Acute Hazard Index (AHI) [i.e. Point of Maximum Impact (PMI)] is estimated to be 0.1 (vs. 3.8 previously). It is at Receptor 80 (389659, 3763479) and is located on the western fence line near the railway track (see Figure B-1). The maximum AHI for the residential scenario is estimated to be 0.009 (vs. 0.2 previously). It is at the same location as the cancer risk MEIR (see Figure B-2). Both AHIs are below the SCAQMD Rule 1402 Action Level of 3.0 and public notification threshold of 1.0.

All electronic files, including emissions, modeling, and health risk assessment, are included in the CD-ROM in Appendix E of the RRP.

Tables

Table B-1 Summary of Hard Lead TAC Emissions
Exide Technologies
Vernon, California

Chemical	CAS	AB2588 Emission Rate - Aug/Sep2013 Tests [1]	Emission Rate Used for Health Metric Calculation [2]		Emission Rate in Jan 2013 HRA	Reduction (Jan2013 – Aug/Sep2013)	Percent Reduction (Reduction/ Jan2013)
		lb/hr	lb/hr	Data Source [3]	lb/hr	lb/hr	
Aluminum	7429905	2.36E-04	2.36E-04	Aug/Sep 2013 test	0	-2.36E-04	--
Antimony	7440360	1.92E-05	1.92E-05	Aug/Sep 2013 test	2.14E-05	2.15E-06	10%
Arsenic	7440382	9.99E-05	9.99E-05	Aug/Sep 2013 test	4.86E-02	4.85E-02	100%
Barium	7440393	1.15E-05	1.15E-05	Aug/Sep 2013 test	1.90E-05	7.50E-06	39%
Beryllium	7440417	0	1.84E-05	2010 test reporting limit	0	0	--
Cadmium	7440439	0	5.95E-05	Jan 2013 HRA	5.95E-05	5.95E-05	100%
Chromium	7440473	6.23E-06	6.23E-06	Aug/Sep 2013 test	2.23E-05	1.61E-05	72%
Cobalt	7440484	0	1.47E-05	Aug/Sep 2013 test reporting limit	4.43E-05	4.43E-05	100%
Copper	7440508	1.15E-04	1.15E-04	Aug/Sep 2013 test	3.43E-05	-8.07E-05	-235%
Lead	7439921	2.77E-03	2.77E-03	Aug/Sep 2013 test	1.41E-03	-1.36E-03	-96%
Manganese	7439965	1.93E-05	1.93E-05	Aug/Sep 2013 test	1.29E-05	-6.40E-06	-50%
Mercury	7439976	8.05E-06	8.05E-06	Aug/Sep 2013 test	2.18E-04	2.09E-04	96%
Nickel	7440020	1.31E-05	1.31E-05	Aug/Sep 2013 test	9.47E-05	8.16E-05	86%
Phosphorus	7723140	8.55E-05	8.55E-05	Aug/Sep 2013 test	3.08E-04	2.23E-04	72%
Selenium	7782492	3.05E-05	3.05E-05	Aug/Sep 2013 test	3.55E-06	-2.70E-05	-759%
Silver	7440224	0	6.72E-06	2012 test reporting limit	0	0	--
Thallium	7440280	0	6.72E-06	2012 test reporting limit	0	0	--
Vanadium	7440622	0	2.12E-06	Jan 2013 HRA	2.12E-06	2.12E-06	100%
Zinc	7440666	3.78E-04	3.78E-04	Aug/Sep 2013 test	2.11E-04	-1.67E-04	-79%
Formaldehyde	50000	7.15E-03	7.15E-03	Aug/Sep 2013 test	2.36E-02	1.64E-02	70%
Acetaldehyde	75070	9.05E-03	9.05E-03	Aug/Sep 2013 test	2.88E-02	1.98E-02	69%
Naphthalene	91203	5.28E-03	5.28E-03	Aug/Sep 2013 test	8.75E-02	8.22E-02	94%
2-Methylnaphthalene	91576	7.25E-04	7.25E-04	Aug/Sep 2013 test	1.06E-02	9.90E-03	93%
Acenaphthylene	208968	3.75E-04	3.75E-04	Aug/Sep 2013 test	8.34E-03	7.97E-03	96%
Acenaphthene	83329	6.23E-05	6.23E-05	Aug/Sep 2013 test	5.47E-04	4.85E-04	89%
Fluorene	86737	2.28E-04	2.28E-04	Aug/Sep 2013 test	2.65E-03	2.42E-03	91%
Phenanthrene	85018	1.73E-03	1.73E-03	Aug/Sep 2013 test	1.09E-02	9.15E-03	84%
Anthracene	120127	1.21E-04	1.21E-04	Aug/Sep 2013 test	8.90E-04	7.69E-04	86%
Fluoranthene	206440	2.41E-04	2.41E-04	Aug/Sep 2013 test	1.06E-03	8.19E-04	77%
Pyrene	129000	1.50E-04	1.50E-04	Aug/Sep 2013 test	3.78E-04	2.28E-04	60%
Benz(a)anthracene	56553	1.55E-05	1.55E-05	Aug/Sep 2013 test	1.56E-05	5.00E-08	0%
Chrysene	218019	6.17E-05	6.17E-05	Aug/Sep 2013 test	5.72E-05	-4.50E-06	-8%
Benzo(b)fluoranthene	205992	2.66E-06	2.66E-06	Aug/Sep 2013 test	1.92E-06	-7.40E-07	-39%
Benzo(k)fluoranthene	207089	5.92E-07	5.92E-07	Aug/Sep 2013 test	9.57E-07	3.65E-07	38%
Benzo(e)pyrene	192972	1.11E-06	1.11E-06	Aug/Sep 2013 test	8.79E-07	-2.31E-07	-26%
Benzo(a)pyrene	50328	0	1.62E-07	Jan 2013 HRA	1.62E-07	1.62E-07	100%
Perylene	198550	0	0	Orangic not detected in all tests	0	0	--
Indeno(1,2,3-cd)pyrene	193395	0	1.39E-07	Jan 2013 HRA	1.39E-07	1.39E-07	100%
Dibenz(a,h)anthracene	53703	0	0	Organic not detected in all tests	0	0	--
Benzo(ghi)perylene	191242	2.94E-07	2.94E-07	Aug/Sep 2013 test	0	-2.94E-07	--
TEQ (Min) as 2,3,7,8-TCDD	1086	2.30E-10	2.30E-10	Aug/Sep 2013 test	2.62E-11	-2.04E-10	-778%
Total PCBs	1336363	1.78E-04	1.78E-04	Aug/Sep 2013 test	2.76E-04	9.80E-05	36%
Chromium VI	18540299	5.82E-06	5.82E-06	Aug/Sep 2013 test	3.65E-06	-2.17E-06	-59%
Benzene	71432	5.00E-02	5.00E-02	Aug/Sep 2013 test	9.70E-01	9.20E-01	95%
Benzyl Chloride	100447	0	0	Organic not detected in all tests	0	0	--
Bromodichloromethane	75274	0	0	Organic not detected in all tests	0	0	--
Bromoform	75252	0	0	Organic not detected in all tests	0	0	--
Bromomethane	74839	0	7.12E-04	August 2013 test reporting limit	5.21E-03	5.21E-03	100%
1,3-Butadiene	106990	8.79E-03	8.79E-03	Aug/Sep 2013 test	2.48E-01	2.39E-01	96%
2-Butanone	78933	3.14E-03	3.14E-03	Aug/Sep 2013 test	4.55E-03	1.41E-03	31%
Carbon Disulfide	75150	8.25E-03	8.25E-03	Aug/Sep 2013 test	1.18E-01	1.10E-01	93%
Carbon Tetrachloride	56235	0	0	Organic not detected in all tests	0	0	--
Chlorobenzene	108907	0	5.55E-04	Jan 2013 HRA	5.55E-04	5.55E-04	100%
Chloroethane	75003	0	4.84E-04	August 2013 test reporting limit	1.19E-03	1.19E-03	100%
Chloroform	67663	0	0	Organic not detected in all tests	0	0	--
Chloromethane	74873	1.57E-03	1.57E-03	Aug/Sep 2013 test	1.23E-02	1.07E-02	87%
Dibromochloromethane	124481	0	0	Organic not detected in all tests	0	0	--
1,1-Dichloroethane	75343	0	0	Organic not detected in all tests	0	0	--
1,1-Dichloroethene	75354	0	0	Organic not detected in all tests	0	0	--
1,2-Dibromoethane	106934	0	0	Organic not detected in all tests	0	0	--

Table B-1 Summary of Hard Lead TAC Emissions
Exide Technologies
Vernon, California

Chemical	CAS	AB2588 Emission Rate - Aug/Sep2013 Tests [1]	Emission Rate Used for Health Metric Calculation [2]		Emission Rate in Jan 2013 HRA	Reduction (Jan2013 – Aug/Sep2013)	Percent Reduction (Reduction/ Jan2013)
		lb/hr	lb/hr	Data Source [3]	lb/hr	lb/hr	
1,2-Dichlorobenzene	95501	0	0	Organic not detected in all tests	0	0	--
1,2-Dichloroethane	107062	0	0	Organic not detected in all tests	0	0	--
1,2-Dichloropropane	78875	0	0	Organic not detected in all tests	0	0	--
1,3-Dichlorobenzene	541731	0	0	Organic not detected in all tests	0	0	--
1,4-Dichlorobenzene	106467	0	0	Organic not detected in all tests	0	0	--
1,4-Dioxane	123911	0	0	Organic not detected in all tests	0	0	--
Ethylbenzene	100414	4.98E-03	4.98E-03	Aug/Sep 2013 test	9.44E-02	8.94E-02	95%
Hexachloro-1,3-Butadiene	87683	0	0	Organic not detected in all tests	0	0	--
MTBE	1634044	0	0	Organic not detected in all tests	0	0	--
Methylene Chloride	75092	0	0	Organic not detected in all tests	0	0	--
4-Methyl-2-Pentanone	108101	0	0	Organic not detected in all tests	0	0	--
Styrene	100425	2.03E-02	2.03E-02	Aug/Sep 2013 test	1.03E+00	1.01E+00	98%
Tetrachloroethene	127184	0	0	Organic not detected in all tests	0	0	--
Toluene	108883	2.34E-02	2.34E-02	Aug/Sep 2013 test	2.96E-01	2.73E-01	92%
Trichloroethene	79016	0	8.70E-04	Jan 2013 HRA	8.70E-04	8.70E-04	100%
Trichlorofluoromethane	75694	0	0	Organic not detected in all tests	0	0	--
1,1,2-Trichloro-1,2,2-Trifluoroethane	76131	0	0	Organic not detected in all tests	0	0	--
1,1,1-Trichloroethane	71556	0	0	Organic not detected in all tests	0	0	--
1,1,2-Trichloroethane	79005	0	0	Organic not detected in all tests	0	0	--
1,1,2,2-Tetrachloroethane	79345	0	0	Organic not detected in all tests	0	0	--
1,2,4-Trimethylbenzene	95636	3.30E-03	3.30E-03	Aug/Sep 2013 test	5.00E-03	1.70E-03	34%
1,2,4-Trichlorobenzene	120821	0	0	Organic not detected in all tests	0	0	--
Vinyl Acetate	108054	1.89E-03	1.89E-03	Aug/Sep 2013 test	2.37E-03	4.75E-04	20%
Vinyl Chloride	75014	0	0	Organic not detected in all tests	0	0	--

P:\E\Exide\HRA 2012 UPDATE\RRP_Revision_Nov2013\[for HARP-Nov2013-RRP-current.xlsx]TB1_HL

Notes:

[1] The table lists the emission rates provided by Almega for the tests in August and September 2013. The values follow the CARB guidance for AB2588 emission inventory. Final laboratory reports have not been issued at the time of this report.

[2] ENVIRON followed the following hierarchy to select the values for the non-detect chemicals:

Metals: 1) used the value in Jan 2013 HRA, if the value in the Jan 2013 HRA is lower than the reporting limit in the Aug/Sep 2013 source tests; 2) otherwise, used the lowest laboratory reporting limit.

Organics: 1) used zero if the it was also below the reporting limits in the 2010 and 2012 source tests; 2) otherwise, use the lower value between the reporting limit of the August/September 2013 tests and the reported value in the Jan 2013 HRA

[3] References:

Aug/Sept 2013 test - See note 1

2010 test - Almega. 2010. AB2588 Emissions Testing at the Exide Technologies, Vernon Facility, Hard Lead Refining System. Report #: 9015 – Hard Lead. May 11

2012 test - Almega. 2012. AB2588 Emissions Testing at the Exide Technologies, Vernon Facility, Hard Lead Refining System. Report #: 9255 – Hard Lead. August 10.

Jan 2013 HRA - ENVIRON. 2013. Revised AB2588 Health Risk Assessment. January

Table B-2 Summary of Soft Lead TAC Emissions
Exide Technologies
Vernon, California

Chemical	CAS	AB2588 Emission Rate - Aug/Sep2013 Tests [1]	Emission Rate Used for Health Metric Calculation [2]		Emission Rate in Jan 2013 HRA	Reduction (Jan2013 – Aug/Sep2013)	Reduction Percentage (Reduction/ Jan2013)
		lb/hr	lb/hr	Data Source [3]	lb/hr	lb/hr	
Aluminum	7429905	1.53E-04	1.53E-04	Aug/Sep 2013 test	3.62E-03	3.47E-03	96%
Antimony	7440360	4.84E-05	4.84E-05	Aug/Sep 2013 test	1.27E-05	-3.57E-05	-281%
Arsenic	7440382	8.24E-06	8.24E-06	Aug/Sep 2013 test	1.00E-04	9.18E-05	92%
Barium	7440393	0	2.01E-05	Jan 2013 HRA data	2.01E-05	2.01E-05	100%
Beryllium	7440417	0	1.67E-05	2010 test reporting limit	0	0	--
Cadmium	7440439	3.71E-05	3.71E-05	Aug/Sep 2013 test	9.59E-05	5.88E-05	61%
Chromium	7440473	4.94E-06	4.94E-06	Aug/Sep 2013 test	0	-4.94E-06	--
Cobalt	7440484	0	1.24E-05	Aug/Sep 2013 reporting limit	2.44E-05	2.44E-05	100%
Copper	7440508	0	9.05E-06	Jan 2013 HRA data	7.25E-05	7.25E-05	100%
Lead	7439921	5.40E-03	5.40E-03	Aug/Sep 2013 test	8.51E-04	-4.55E-03	-535%
Manganese	7439965	1.14E-05	1.14E-05	Aug/Sep 2013 test	0	-1.14E-05	--
Mercury	7439976	1.04E-04	1.04E-04	Aug/Sep 2013 test	3.14E-05	-7.26E-05	-231%
Nickel	7440020	1.17E-05	1.17E-05	Aug/Sep 2013 test	0	-1.17E-05	--
Phosphorus	7723140	4.12E-05	4.12E-05	Aug/Sep 2013 test	7.58E-04	7.17E-04	95%
Selenium	7782492	0	9.08E-06	Jan 2013 HRA data	0	0	--
Silver	7440224	7.62E-06	7.62E-06	Aug/Sep 2013 test	0	-7.62E-06	--
Thallium	7440280	0	6.68E-06	2010 test reporting limit	0	0	--
Vanadium	7440622	0	3.34E-05	2010 test reporting limit	0	0	--
Zinc	7440666	3.19E-04	3.19E-04	Aug/Sep 2013 test	3.38E-04	1.90E-05	6%
Formaldehyde	50000	5.89E-03	5.89E-03	Aug/Sep 2013 test	4.87E-03	-1.02E-03	-21%
Acetaldehyde	75070	0	1.11E-03	Jan 2013 HRA data	3.70E-03	3.70E-03	100%
Naphthalene	91203	1.15E-02	1.15E-02	Aug/Sep 2013 test	1.29E-02	1.40E-03	11%
2-Methylnaphthalene	91576	7.63E-04	7.63E-04	Aug/Sep 2013 test	1.23E-03	4.67E-04	38%
Acenaphthylene	208968	1.74E-03	1.74E-03	Aug/Sep 2013 test	1.14E-03	-6.00E-04	-53%
Acenaphthene	83329	3.48E-05	3.48E-05	Aug/Sep 2013 test	3.88E-05	4.00E-06	10%
Fluorene	86737	2.97E-04	2.97E-04	Aug/Sep 2013 test	3.85E-04	8.80E-05	23%
Phenanthrene	85018	1.59E-03	1.59E-03	Aug/Sep 2013 test	3.24E-03	1.65E-03	51%
Anthracene	120127	6.06E-05	6.06E-05	Aug/Sep 2013 test	1.90E-05	-4.16E-05	-219%
Fluoranthene	206440	4.10E-04	4.10E-04	Aug/Sep 2013 test	3.03E-04	-1.07E-04	-35%
Pyrene	129000	2.17E-04	2.17E-04	Aug/Sep 2013 test	6.23E-05	-1.55E-04	-248%
Benz(a)anthracene	56553	2.34E-06	2.34E-06	Aug/Sep 2013 test	0	-2.34E-06	--
Chrysene	218019	4.06E-05	4.06E-05	Aug/Sep 2013 test	8.10E-06	-3.25E-05	-401%
Benzo(b)fluoranthene	205992	1.83E-06	1.83E-06	Aug/Sep 2013 test	0	-1.83E-06	--
Benzo(k)fluoranthene	207089	3.08E-07	3.08E-07	Aug/Sep 2013 test	0	-3.08E-07	--
Benzo(e)pyrene	192972	9.44E-07	9.44E-07	Aug/Sep 2013 test	0	-9.44E-07	--
Benzo(a)pyrene	50328	0	9.65E-08	Jan 2013 HRA data	0	0	--
Perylene	198550	0	0	Organic not detected in all tests	0	0	--
Indeno(1,2,3-cd)pyrene	193395	0	0.00E+00	Organic not detected in all tests	0	0	--
Dibenz(a,h)anthracene	53703	0	3.13E-07	Jan 2013 HRA data	0	0	--
Benzo(ghi)perylene	191242	5.06E-07	5.06E-07	Aug/Sep 2013 test	0	-5.06E-07	--
Chromium VI	18540299	1.25E-05	1.25E-05	Aug/Sep 2013 test	1.87E-06	-1.06E-05	-568%
Benzene	71432	1.09E-02	1.09E-02	Aug/Sep 2013 test	6.19E-02	5.10E-02	82%
Benzyl Chloride	100447	0	0	Organic not detected in all tests	0	0	--
Bromodichloromethane	75274	0	0	Organic not detected in all tests	0	0	--
Bromoform	75252	0	0	Organic not detected in all tests	0	0	--
Bromomethane	74839	0	8.60E-05	Jan 2013 HRA data	0	0	--
1,3-Butadiene	106990	1.16E-03	1.16E-03	Aug/Sep 2013 test	9.77E-02	9.65E-02	99%
2-Butanone	78933	0	2.42E-04	Jan 2013 HRA data	0	0	--
Carbon Disulfide	75150	0	0	Organic not detected in all tests	0	0	--
Carbon Tetrachloride	56235	0	0	Organic not detected in all tests	0	0	--
Chlorobenzene	108907	0	0	Organic not detected in all tests	0	0	--
Chloroethane	75003	0	0	Organic not detected in all tests	0	0	--
Chloroform	67663	0	0	Organic not detected in all tests	0	0	--
Chloromethane	74873	3.05E-04	3.05E-04	Aug/Sep 2013 test	4.75E-04	1.70E-04	36%
Dibromochloromethane	124481	0	0	Organic not detected in all tests	0	0	--
1,1-Dichloroethane	75343	0	0	Organic not detected in all tests	0	0	--
1,1-Dichloroethene	75354	0	0	Organic not detected in all tests	0	0	--
1,2-Dibromoethane	106934	0	0	Organic not detected in all tests	0	0	--
1,2-Dichlorobenzene	95501	0	0	Organic not detected in all tests	0	0	--
1,2-Dichloroethane	107062	0	0	Organic not detected in all tests	0	0	--
1,2-Dichloropropane	78875	0	0	Organic not detected in all tests	0	0	--
1,3-Dichlorobenzene	541731	0	0	Organic not detected in all tests	0	0	--
1,4-Dichlorobenzene	106467	0	0	Organic not detected in all tests	0	0	--
1,4-Dioxane	123911	0	0	Organic not detected in all tests	0	0	--
Ethylbenzene	100414	6.68E-04	6.68E-04	Aug/Sep 2013 test	1.72E-03	1.05E-03	61%
Hexachloro-1,3-Butadiene	87683	0	0	Organic not detected in all tests	0	0	--
MTBE	1634044	0	0	Organic not detected in all tests	0	0	--
Methylene Chloride	75092	0	0	Organic not detected in all tests	0	0	--
4-Methyl-2-Pentanone	108101	0	0	Organic not detected in all tests	0	0	--
Styrene	100425	0	0	Organic not detected in all tests	3.24E-03	3.24E-03	100%
Tetrachloroethene	127184	0	1.97E-03	Jan 2013 HRA data	0	0	--

Table B-2 Summary of Soft Lead TAC Emissions
Exide Technologies
Vernon, California

Chemical	CAS	AB2588 Emission Rate - Aug/Sep2013 Tests [1]	Emission Rate Used for Health Metric Calculation [2]		Emission Rate in Jan 2013 HRA	Reduction (Jan2013 – Aug/Sep2013)	Reduction Percentage (Reduction/ Jan2013)
		lb/hr	lb/hr	Data Source [3]	lb/hr	lb/hr	
Toluene	108883	1.11E-02	1.11E-02	Aug/Sep 2013 test	8.14E-03	-2.96E-03	-36%
Trichloroethene	79016	0	1.32E-04	Jan 2013 HRA data	0	0	--
Trichlorofluoromethane	75694	0	0	Organic not detected in all tests	0	0	--
1,1,2-Trichloro-1,2,2-Trifluoroethane	76131	0	0	Organic not detected in all tests	0	0	--
1,1,1-Trichloroethane	71556	0	0	Organic not detected in all tests	0	0	--
1,1,2-Trichloroethane	79005	0	0	Organic not detected in all tests	0	0	--
1,1,2,2-Tetrachloroethane	79345	0	0	Organic not detected in all tests	0	0	--
1,2,4-Trimethylbenzene	95636	0	0	Organic not detected in all tests	0	0	--
1,2,4-Trichlorobenzene	120821	0	0	Organic not detected in all tests	0	0	--
Vinyl Acetate	108054	0	4.85E-04	Jan 2013 HRA data	0	0	--
Vinyl Chloride	75014	0	0	Organic not detected in all tests	0	0	--

P:\E\Exide\HRA 2012 UPDATE\RRP_Revision_Nov2013\[for HARP-Nov2013-RRP-current.xlsx]TB2_SL

Notes:

[1] The table lists the emission rates provided by Almega for the tests in August and September 2013. The values follow the CARB guidance for AB2588 emission inventory. Final laboratory reports have not been issued at the time of this report.

[2] ENVIRON followed the following hierarchy to select the values for the non-detect chemicals:

Metals: 1) used the value in Jan 2013 HRA, if the value in the Jan 2013 HRA is lower than the reporting limit in the Aug/Sep 2013 source tests; 2) otherwise, used the lowest laboratory reporting limit.

Organics: 1) used zero if the it was also below the reporting limits in the 2010 and 2012 source tests; 2) otherwise, use the lower value between the reporting limit of the August/September 2013 tests and the reported value in the Jan 2013 HRA

[3] References:

Aug/Sept 2013 test - See note 1

2010 test - Almega. 2010. AB2588 Emissions Testing at the Exide Technologies, Vernon Facility, Hard Lead Refining System. Report #: 9015 – Soft Lead. May 16

Jan 2013 HRA - ENVIRON. 2013. Revised AB2588 Health Risk Assessment. January

Table B-3 Summary of Neptune TAC Emissions
Exide Technologies
Vernon, California

Chemical	CAS	Emission Rate Reported for Aug/Sep 2013 Tests [1]	Emission Rate Used for Health Metric Calculation [2]		Emission Rate in Jan 2013 HRA	Reduction (Jan2013 – Aug/Sep2013)	Reduction Percentage (Reduction/ Jan2013)
		lb/hr	lb/hr	Data Source [3]	lb/hr	lb/hr	
Aluminum	7429905	4.06E-04	4.06E-04	Aug/Sep 2013 test	1.39E-03	9.79E-04	71%
Barium	7440393	5.91E-06	5.91E-06	Aug/Sep 2013 test	2.46E-05	1.86E-05	76%
Chromium	7440473	8.04E-06	8.04E-06	Aug/Sep 2013 test	5.67E-06	-2.38E-06	-42%
Cobalt	7440484	0	1.40E-06	Jan 2013 HRA data	1.40E-06	0	0%
Silver	7440224	0	1.18E-06	Jan 2013 HRA data	1.18E-06	0	0%
Thallium	7440280	0	1.49E-06	2010 test reporting limit	0	-1.49E-06	--
2-Methylnaphthalene	91576	2.52E-06	2.52E-06	Aug/Sep 2013 test	5.04E-06	2.52E-06	50%
Acenaphthylene	208968	1.50E-07	1.50E-07	Aug/Sep 2013 test	5.13E-07	3.63E-07	71%
Acenaphthene	83329	2.36E-07	2.36E-07	Aug/Sep 2013 test	5.95E-07	3.59E-07	60%
Fluorene	86737	3.63E-07	3.63E-07	Aug/Sep 2013 test	2.16E-06	1.80E-06	83%
Phenanthrene	85018	2.79E-06	2.79E-06	Aug/Sep 2013 test	2.15E-05	1.87E-05	87%
Anthracene	120127	0	6.19E-07	Jan 2013 HRA data	6.19E-07	0	0%
Fluoranthene	206440	3.33E-06	3.33E-06	Aug/Sep 2013 test	2.72E-05	2.38E-05	88%
Pyrene	129000	1.20E-06	1.20E-06	Aug/Sep 2013 test	1.65E-05	1.53E-05	93%
Benzo(e)pyrene	192972	9.62E-08	9.62E-08	Aug/Sep 2013 test	1.07E-06	9.69E-07	91%
Perylene	198550	0	0	Organic not detected in any tests	0	0	--
Benzo(ghi)perylene	191242	1.74E-07	1.74E-07	Aug/Sep 2013 test	0	-1.74E-07	--
Bromodichloromethane	75274	0	0	Organic not detected in any tests	0	0	--
Bromoform	75252	0	0	Organic not detected in any tests	0	0	--
Chloromethane	74873	0	8.67E-05	Aug/Sep 2013 test reporting limit	2.15E-04	1.28E-04	60%
Dibromochloromethane	124481	0	0	Organic not detected in any tests	0	0	--
1,2-Dichlorobenzene	95501	0	0	Organic not detected in any tests	0	0	--
1,3-Dichlorobenzene	541731	0	0	Organic not detected in any tests	0	0	--
Hexachloro-1,3-Butadiene	87683	0	0	Organic not detected in any tests	0	0	--
4-Methyl-2-Pentanone	108101	1.79E-03	1.79E-03	Aug/Sep 2013 test	0	-1.79E-03	--
1,2,4-Trimethylbenzene	95636	0	0	Organic not detected in any tests	0	0	--
1,2,4-Trichlorobenzene	120821	0	0	Organic not detected in any tests	0	0	--
Antimony	7440360	2.45E-05	2.45E-05	Aug/Sep 2013 test	5.14E-06	-1.94E-05	-377%
Arsenic	7440382	3.98E-06	3.98E-06	Aug/Sep 2013 test	3.39E-06	-5.90E-07	-17%
Beryllium	7440417	0	1.17E-06	AQMD April 2013 test	0	-1.17E-06	--
Cadmium	7440439	1.81E-05	1.81E-05	Aug/Sep 2013 test	6.69E-06	-1.14E-05	-171%
Copper	7440508	7.99E-05	7.99E-05	Aug/Sep 2013 test	9.05E-06	-7.09E-05	-783%
Lead	7439921	1.64E-03	1.64E-03	Aug/Sep 2013 test	4.97E-04	-1.14E-03	-230%
Manganese	7439965	1.62E-05	1.62E-05	Aug/Sep 2013 test	4.47E-06	-1.17E-05	-262%
Mercury	7439976	8.85E-04	8.85E-04	Aug/Sep 2013 test	6.96E-05	-8.15E-04	-1172%
Nickel	7440020	2.35E-05	2.35E-05	Aug/Sep 2013 test	2.90E-05	5.45E-06	19%
Phosphorus	7723140	3.62E-05	3.62E-05	Aug/Sep 2013 test	1.45E-04	1.08E-04	75%
Selenium	7782492	2.17E-05	2.17E-05	Aug/Sep 2013 test	9.08E-06	-1.26E-05	-139%
Vanadium	7440622	0	7.47E-06	2010 test reporting limit	0	-7.47E-06	--
Zinc	7440666	3.02E-04	3.02E-04	Aug/Sep 2013 test	1.00E-04	-2.02E-04	-202%
Formaldehyde	50000	2.30E-03	2.30E-03	Aug/Sep 2013 test	9.02E-04	-1.40E-03	-155%
Acetaldehyde	75070	2.08E-03	2.08E-03	Aug/Sep 2013 test	1.11E-03	-9.73E-04	-88%
Naphthalene	91203	1.18E-05	1.18E-05	Aug/Sep 2013 test	1.89E-05	7.05E-06	37%
Benz(a)anthracene	56553	0	1.09E-07	Aug/Sep 2013 test reporting limit	1.41E-06	1.31E-06	92%
Chrysene	218019	1.96E-06	1.96E-06	Aug/Sep 2013 test	1.33E-05	1.13E-05	85%
Benzo(b)fluoranthene	205992	1.11E-07	1.11E-07	Aug/Sep 2013 test	1.51E-06	1.39E-06	93%
Benzo(k)fluoranthene	207089	0	1.09E-07	Aug/Sep 2013 test reporting limit	4.18E-07	3.09E-07	74%
Benzo(a)pyrene	50328	0	9.65E-08	Jan 2013 HRA data	9.65E-08	0	0%
Indeno(1,2,3-cd)pyrene	193395	0	0	Organic not detected in any tests	0	0	--
Dibenz(a,h)anthracene	53703	0	1.09E-07	Aug/Sep 2013 test reporting limit	3.13E-07	2.04E-07	65%
TEQ (Min) as 2,3,7,8-TCDD	1086	5.41E-10	5.41E-10	Aug/Sep 2013 test	3.17E-09	2.63E-09	83%
Total PCBs	1336363	1.17E-06	1.17E-06	Aug/Sep 2013 test	3.95E-06	2.78E-06	70%
Chromium VI	18540299	4.96E-06	4.96E-06	Aug/Sep 2013 test	2.90E-05	2.40E-05	83%
Benzene	71432	2.11E-04	2.11E-04	Aug/Sep 2013 test	7.15E-05	-1.40E-04	-195%
Benzyl Chloride	100447	0	0	Organic not detected in any tests	0	0	--
Bromomethane	74839	0	8.60E-05	Jan 2013 HRA data	8.60E-05	0	0%
1,3-Butadiene	106990	0	1.93E-04	2012 test reporting limit	7.05E-03	6.86E-03	97%
2-Butanone	78933	7.97E-03	7.97E-03	Aug/Sep 2013 test	2.42E-04	-7.73E-03	-3193%
Carbon Disulfide	75150	0	0	Organic not detected in any tests	0	0	--
Carbon Tetrachloride	56235	0	0	Organic not detected in any tests	0	0	--

Table B-3 Summary of Neptune TAC Emissions
Exide Technologies
Vernon, California

Chemical	CAS	Emission Rate Reported for Aug/Sep 2013 Tests [1]	Emission Rate Used for Health Metric Calculation [2]		Emission Rate in Jan 2013 HRA	Reduction (Jan2013 – Aug/Sep2013)	Reduction Percentage (Reduction/ Jan2013)
		lb/hr	lb/hr	Data Source [3]	lb/hr	lb/hr	
Chlorobenzene	108907	0	0	Organic not detected in any tests	0	0	--
Chloroethane	75003	0	0	Organic not detected in any tests	0	0	--
Chloroform	67663	0	0	Organic not detected in any tests	0	0	--
1,1-Dichloroethane	75343	0	0	Organic not detected in any tests	0	0	--
1,1-Dichloroethene	75354	0	0	Organic not detected in any tests	0	0	--
1,2-Dibromoethane	106934	0	0	Organic not detected in any tests	0	0	--
1,2-Dichloroethane	107062	0	0	Organic not detected in any tests	0	0	--
1,2-Dichloropropane	78875	0	0	Organic not detected in any tests	0	0	--
1,4-Dichlorobenzene	106467	0	0	Organic not detected in any tests	0	0	--
1,4-Dioxane	123911	0	0	Organic not detected in any tests	0	0	--
Ethylbenzene	100414	3.18E-04	3.18E-04	Aug/Sep 2013 test	0	-3.18E-04	--
MTBE	1634044	0	0	Organic not detected in any tests	0	0	--
Methylene Chloride	75092	0	0	Organic not detected in any tests	0	0	--
Styrene	100425	0	0	Organic not detected in any tests	0	0	--
Tetrachloroethene	127184	5.72E-04	5.72E-04	Aug/Sep 2013 test	1.97E-03	1.40E-03	71%
Toluene	108883	2.91E-04	2.91E-04	Aug/Sep 2013 test	5.84E-04	2.93E-04	50%
Trichloroethene	79016	0	1.32E-04	Jan 2013 HRA data	1.32E-04	0	0%
Trichlorofluoromethane	75694	0	0	Organic not detected in any tests	0	0	--
1,1,2-Trichloro-1,2,2-Trifluoroethane	76131	0	0	Organic not detected in any tests	0	0	--
1,1,1-Trichloroethane	71556	0	0	Organic not detected in any tests	0	0	--
1,1,2-Trichloroethane	79005	0	0	Organic not detected in any tests	0	0	--
1,1,2,2-Tetrachloroethane	79345	0	0	Organic not detected in any tests	0	0	--
Vinyl Acetate	108054	1.70E-01	1.70E-01	Aug/Sep 2013 test	4.85E-04	-1.70E-01	-34952%
Vinyl Chloride	75014	0	0	Organic not detected in any tests	0	0	--

P:\E\Exide\HRA 2012 UPDATE\RRP_Revision_Nov2013\[for HARP-Nov2013-RRP-current.xlsx]TB3_Neptune

Notes:

[1] The table lists the emission rates provided by Almega for the tests in August and September 2013. The values follow the CARB guidance for AB2588 emission inventory. Final laboratory reports have not been issued at the time of this report.

[2] ENVIRON followed the following hierarchy to select the values for the non-detect chemicals:

Metals: 1) used the value in Jan 2013 HRA, if the value in the Jan 2013 HRA is lower than the reporting limit in the Aug/Sep 2013 source tests; 2) otherwise, used the lowest laboratory reporting limit. Exception: beryllium was found to have a lower reporting limit in the AQMD May test.

Organics: 1) used zero if the it was also below the reporting limits in the 2010 and 2012 source tests; 2) otherwise, use the lower value between the reporting limit of the August/September 2013 tests and the reported value in the Jan 2013 HRA

[3] References:

Aug/Sept 2013 test - See note 1

2010 test - Almega. 2010. AB2588 Emissions Testing at the Exide Technologies, Vernon Facility, Hard Lead Refining System. Report #: 9015 – Neptune. May 4

2012 test - Almega. 2010. AB2588 Emissions Testing at the Exide Technologies, Vernon Facility, Hard Lead Refining System. Report #: 9256 – Neptune. August 8.

AQMD April test - AQMD. 2013. Source Tests Report 13-305 Conducted at Exide Technologies: Multiple Metal Emissions from the Neptune/venturi Exhaust Stack. May 17

Jan 2013 HRA - ENVIRON. 2013. Revised AB2588 Health Risk Assessment. January

Table B-4 Summary of South and North Torits TAC Emissions
Exide Technologies
Vernon, California

Chemical	CAS	September 2013 Test Result [1]	Value Used for Health Risk Calculation [2]		Emission Rate in Jan 2013 HRA	Reduction (Jan2013 – Sep2013)	Reduction Percentage (Reduction/ Jan2013)
		lb/hr	lb/hr	Data Source [3]	lb/hr	lb/hr	
South Torit							
Aluminum	7429905	8.54E-04	8.54E-04	Sep 2013 test	3.15E-03	2.30E-03	73%
Antimony	7440360	<0.000132	1.32E-04	Sep 2013 test reporting limit	3.36E-04	2.04E-04	61%
Arsenic	7440382	<0.000123	4.83E-05	Jan 2013 HRA	4.83E-05	0.00E+00	0%
Barium	7440393	3.35E-05	3.35E-05	Sep 2013 test	5.48E-05	2.13E-05	39%
Beryllium	7440417	<0.000308	2.22E-05	2010 test reporting limit	0	-2.22E-05	--
Cadmium	7440439	2.73E-05	2.73E-05	Sep 2013 test	2.19E-05	-5.40E-06	-25%
Chromium	7440473	7.05E-05	7.05E-05	Sep 2013 test	0	-7.05E-05	--
Cobalt	7440484	<0.0000352	8.88E-06	2010 test reporting limit	0	-8.88E-06	--
Copper	7440508	7.75E-04	7.75E-04	Sep 2013 test	6.07E-05	-7.14E-04	-1177%
Lead	7439921	3.82E-03	3.82E-03	Sep 2013 test	3.60E-03	-2.20E-04	-6%
Manganese	7439965	3.17E-05	3.17E-05	Sep 2013 test	1.92E-05	-1.25E-05	-65%
Nickel	7440020	3.99E-04	3.99E-04	Sep 2013 test	5.92E-06	-3.93E-04	-6640%
Phosphorus	7723140	<0.000881	8.81E-04	Sep 2013 test reporting limit	0	-8.81E-04	--
Selenium	7782492	<0.000123	1.78E-05	2010 test reporting limit	0	-1.78E-05	--
Silver	7440224	4.05E-05	4.05E-05	Sep 2013 test	0	-4.05E-05	--
Thallium	7440280	<0.0000352	8.88E-06	2010 test reporting limit	0	-8.88E-06	--
Vanadium	7440622	<0.000176	4.44E-05	2010 test reporting limit	--	--	--
Zinc	7440666	7.40E-04	7.40E-04	Sep 2013 test	1.81E-04	-5.59E-04	-309%
Iron	7439896	2.99E-03	2.99E-03	Sep 2013 test	--	--	--
Acetone	67641	2.42E-02	2.42E-02	Sep 2013 test	--	--	--
Benzene	71432	5.35E-03	5.35E-03	Sep 2013 test	--	--	--
Chloromethane	74873	3.04E-04	3.04E-04	Sep 2013 test	--	--	--
Toluene	108883	9.39E-03	9.39E-03	Sep 2013 test	--	--	--
North Torit							
Aluminum	7429905	9.72E-04	9.72E-04	Sep 2013 test	3.18E-03	2.21E-03	69%
Antimony	7440360	<0.000133	1.81E-05	Jan 2013 HRA	1.81E-05	0	0%
Arsenic	7440382	<0.000124	1.24E-04	Sep 2013 test reporting limit	8.69E-04	7.45E-04	86%
Barium	7440393	8.75E-05	8.75E-05	Sep 2013 test	1.11E-05	-7.64E-05	-688%
Beryllium	7440417	<0.000309	1.85E-05	2010 test reporting limit	0	-1.85E-05	--
Cadmium	7440439	<0.000106	4.36E-05	Jan 2013 HRA	4.36E-05	0	0%
Chromium	7440473	2.92E-05	2.92E-05	Sep 2013 test	0	-2.92E-05	--
Cobalt	7440484	<0.0000353	5.05E-06	2010 test report	5.05E-06	0	0%
Copper	7440508	4.33E-04	4.33E-04	Sep 2013 test	0	-4.33E-04	--
Lead	7439921	2.50E-03	2.50E-03	Sep 2013 test	1.41E-03	-1.09E-03	-77%
Manganese	7439965	2.03E-04	2.03E-04	Sep 2013 test	2.25E-04	2.20E-05	10%
Nickel	7440020	3.53E-05	3.53E-05	Sep 2013 test	5.17E-05	1.64E-05	32%
Phosphorus	7723140	<0.000884	8.84E-04	Sep 2013 test reporting limit	0	-8.84E-04	--
Selenium	7782492	<0.000124	7.39E-06	2010 test reporting limit	0	-7.39E-06	--
Silver	7440224	<0.0000353	9.97E-06	2010 test report	9.97E-06	0	0%
Thallium	7440280	<0.0000353	7.39E-06	2010 test reporting limit	0	-7.39E-06	--
Vanadium	7440622	<0.000177	3.69E-05	2010 test reporting limit	--	--	--
Zinc	7440666	4.33E-04	4.33E-04	Sep 2013 test	2.56E-04	-1.77E-04	-69%
Iron	7439896	1.86E-03	1.86E-03	Sep 2013 test	--	--	--
Acetone	67641	3.20E-02	3.20E-02	Sep 2013 test	--	--	--
Benzene	71432	9.38E-03	9.38E-03	Sep 2013 test	--	--	--
Chloromethane	74873	4.39E-04	4.39E-04	Sep 2013 test	--	--	--
Toluene	108883	1.59E-02	1.59E-02	Sep 2013 test	--	--	--
Trichloroethene	79016	7.33E-04	7.33E-04	Sep 2013 test	--	--	--

P:\E\Exide\HRA 2012 UPDATE\RRP_Revision_Nov2013\[for HARP-Nov2013-RRP-current.xlsx]TB4_Torits

Notes:

[1] Almega. 2013. Emissions Testing at the Exide Technologies, Vernon Facility, North Torit and South Torit Baghouses (Source Test Report for AQMD). October 21.

[2] ENVIRON followed the following hierarchy to select the values for the non-detect chemicals:

Metals: 1) used the value in Jan 2013 HRA, if the value in the Jan 2013 HRA is lower than the reporting limit in the Sep 2013 source tests; 2) otherwise, used the lowest laboratory reporting limit.

Organics: only listed the detected compounds. Organics were not tested previously and therefore not reported in the Jan 2013 HRA.

[3] References:

Sept 2013 test - See note 1

2010 test (a) - Almega. 2010. AB2588 Emissions Testing at the Exide Technologies, Vernon Facility, Hard Lead Refining System. Report #: 9015 – South Torits. May 16

2011 test (b) - Almega. 2010. AB2588 Emissions Testing at the Exide Technologies, Vernon Facility, Hard Lead Refining System. Report #: 9015 – North Torits. May 12

Jan 2013 HRA - ENVIRON. 2013. Revised AB2588 Health Risk Assessment. January

ENVIRON

Table B-5 Summary of Facility-Wide Emissions of TACs
Exide Technologies
Vernon, California

Chemical Name	CAS #	Max Hourly Emission Rate (lb/hr)	Max Hourly Emission Rate (g/s)	Annual Emission Rate (lb/yr)	Annual Emission Rate (g/s)
1,1,1 -Trichloroethane	71556	0	0	0	0
1,1,2,2-Tetrachloroethane	79345	0	0	0	0
1,1,2-Trichloro-1,2,2-Trifluoroethane	76131	0	0	0	0
1,1,2-Trichloroethane	79005	0	0	0	0
1,1-Dichloroethane	75343	0	0	0	0
1,1-Dichloroethene	75354	2.85E-04	3.59E-05	2.50E+00	3.59E-05
1,2,4-Trichlorobenzene	120821	0	0	0	0
1,2,4-Trimethylbenzene	95636	3.30E-03	4.16E-04	2.89E+01	4.16E-04
1,2-Dibromoethane	106934	0	0	0	0
1,2-Dichlorobenzene	95501	0	0	0	0
1,2-Dichloroethane	107062	0	0	0	0
1,2-Dichloropropane	78875	0	0	0	0
1,3-Butadiene	106990	2.68E-02	3.38E-03	2.35E+02	3.38E-03
1,3-Dichlorobenzene	541731	0	0	0	0
1,4-Dichlorobenzene	106467	0	0	0	0
1,4-Dioxane	123911	0	0	0	0
2-Butanone	78933	1.63E-02	2.06E-03	1.43E+02	2.06E-03
2-Methylnaphthalene	91576	2.41E-03	3.03E-04	2.11E+01	3.03E-04
4-Methyl-2-Pentanone	108101	2.93E-03	3.69E-04	2.57E+01	3.69E-04
Acenaphthene	83329	1.02E-04	1.29E-05	8.97E-01	1.29E-05
Acenaphthylene	208968	2.16E-03	2.72E-04	1.89E+01	2.72E-04
Acetaldehyde	75070	2.02E-02	2.54E-03	1.77E+02	2.54E-03
Acrolein	107028	3.37E-07	4.25E-08	2.96E-03	4.25E-08
Aluminum	7429905	1.66E-01	2.09E-02	1.45E+03	2.09E-02
Ammonia	7664417	2.25E-03	2.83E-04	1.97E+01	2.83E-04
Anthracene	120127	1.83E-04	2.30E-05	1.60E+00	2.30E-05
Antimony	7440360	5.67E-04	7.14E-05	4.80E+00	6.91E-05
Arsenic	7440382	4.52E-04	5.70E-05	3.94E+00	5.66E-05
Barium	7440393	1.20E-03	1.51E-04	1.05E+01	1.51E-04
Benz(a)anthracene	56553	1.80E-05	2.27E-06	1.58E-01	2.27E-06
Benzene	71432	2.64E-01	3.32E-02	2.31E+03	3.32E-02
Benzo(a)pyrene	50328	3.55E-07	4.47E-08	3.11E-03	4.47E-08
Benzo(b)fluoranthene	205992	4.79E-06	6.04E-07	4.20E-02	6.04E-07
Benzo(e)pyrene	192972	2.24E-06	2.82E-07	1.96E-02	2.82E-07
Benzo(ghi)perylene	191242	9.74E-07	1.23E-07	8.53E-03	1.23E-07
Benzo(k)fluoranthene	207089	1.01E-06	1.27E-07	8.84E-03	1.27E-07
Benzyl Chloride	100447	0	0	0	0
Beryllium	7440417	7.70E-05	9.70E-06	6.74E-01	9.70E-06
Bromodichloromethane	75274	0	0	0	0
Bromoform	75252	0	0	0	0
Bromomethane	74839	1.69E-03	2.13E-04	1.48E+01	2.13E-04
Cadmium	7440439	2.61E-04	3.29E-05	2.28E+00	3.28E-05
Carbon Disulfide	75150	1.65E-02	2.08E-03	1.45E+02	2.08E-03
Carbon Tetrachloride	56235	0	0	0	0
Chlorobenzene	108907	5.55E-04	6.99E-05	4.86E+00	6.99E-05
Chlorodibromomethane	124481	0	0	0	0
Chloro methane	74873	3.46E-03	4.36E-04	3.03E+01	4.36E-04
Chloroethane	75003	4.84E-04	6.10E-05	4.24E+00	6.10E-05
Chloroform	67663	4.10E-04	5.17E-05	3.59E+00	5.17E-05
Chromium	7440473	7.71E-04	9.71E-05	6.73E+00	9.68E-05
Chromium VI	18540299	1.12E-04	1.42E-05	9.85E-01	1.42E-05
Chrysene	218019	1.09E-04	1.38E-05	9.59E-01	1.38E-05
Cobalt	7440484	1.36E-04	1.72E-05	1.19E+00	1.72E-05
Copper	7440508	1.75E-03	2.21E-04	1.52E+01	2.19E-04
Dibenz(a,h)anthracene	53703	4.22E-07	5.32E-08	3.70E-03	5.32E-08
Ethylbenzene	100414	7.43E-03	9.36E-04	6.51E+01	9.36E-04
Fluoranthene	206440	6.85E-04	8.63E-05	6.00E+00	8.63E-05
Fluorene	86737	5.40E-04	6.81E-05	4.73E+00	6.81E-05

Table B-5 Summary of Facility-Wide Emissions of TACs
Exide Technologies
Vernon, California

Chemical Name	CAS #	Max Hourly Emission Rate (lb/hr)	Max Hourly Emission Rate (g/s)	Annual Emission Rate (lb/yr)	Annual Emission Rate (g/s)
Formaldehyde	50000	3.44E-02	4.34E-03	3.02E+02	4.34E-03
Hexachloro-1,3-Butadiene	87683	0	0	0	0
Hexane	110543	7.88E-07	9.93E-08	6.90E-03	9.92E-08
Indeno(1,2,3-cd)pyrene	193395	1.69E-07	2.13E-08	1.48E-03	2.13E-08
Lead	7439921	3.05E-02	3.84E-03	2.61E+02	3.75E-03
Manganese	7439965	4.08E-04	5.14E-05	3.53E+00	5.07E-05
Mercury	7439976	1.09E-03	1.37E-04	9.54E+00	1.37E-04
Methylene Chloride	75092	0	0	0	0
Methyl-t-Butyl Ether (MTBE)	1634044	0	0	0	0
Naphthalene	91203	3.02E-02	3.80E-03	2.64E+02	3.80E-03
Nickel	7440020	6.82E-04	8.59E-05	5.93E+00	8.52E-05
Perylene	198550	0	0	0	0
Phenanthrene	85018	3.45E-03	4.34E-04	3.02E+01	4.34E-04
Phosphorus	7723140	2.79E-03	3.51E-04	2.43E+01	3.50E-04
Pyrene	129000	3.74E-04	4.72E-05	3.28E+00	4.72E-05
Selenium	7782492	9.57E-05	1.21E-05	8.27E-01	1.19E-05
Silver	7440224	8.60E-05	1.08E-05	7.53E-01	1.08E-05
Styrene	100425	2.45E-02	3.09E-03	2.15E+02	3.09E-03
TEQ (Min) as 2,3,7,8-TCDD	1086	8.49E-10	1.07E-10	7.44E-06	1.07E-10
Tetrachloroethene	127184	2.54E-03	3.20E-04	2.23E+01	3.20E-04
Thallium	7440280	3.12E-05	3.93E-06	2.73E-01	3.93E-06
Toluene	108883	7.22E-02	9.10E-03	6.32E+02	9.10E-03
Total PAHs (excl.Naphthalene)	1151	1.25E-08	1.58E-09	1.09E-04	1.57E-09
Total PCBs, as MonoCB	1336363	8.56E-04	1.08E-04	7.50E+00	1.08E-04
Trichloroethene	79016	2.28E-03	2.87E-04	2.00E+01	2.87E-04
Trichlorofluoro methane	75694	0	0	0	0
Vanadium	7440622	1.29E-04	1.62E-05	1.13E+00	1.62E-05
Vinyl Acetate	108054	1.77E-01	2.23E-02	1.55E+03	2.23E-02
Vinyl Chloride	75014	2.80E-04	3.53E-05	2.45E+00	3.53E-05
Xylenes	1330207	1.96E-02	2.47E-03	1.72E+02	2.47E-03
Zinc	7440666	3.36E-03	4.23E-04	2.91E+01	4.19E-04

P:\E\Exide\Risk Reduction Plan 2013\App B\[Table B-5 ES.xlsx]table 5

Note:
lb/hr = pounds per hour; lb/yr = pounds per year; g/s = grams per second

ENVIRON

Figures

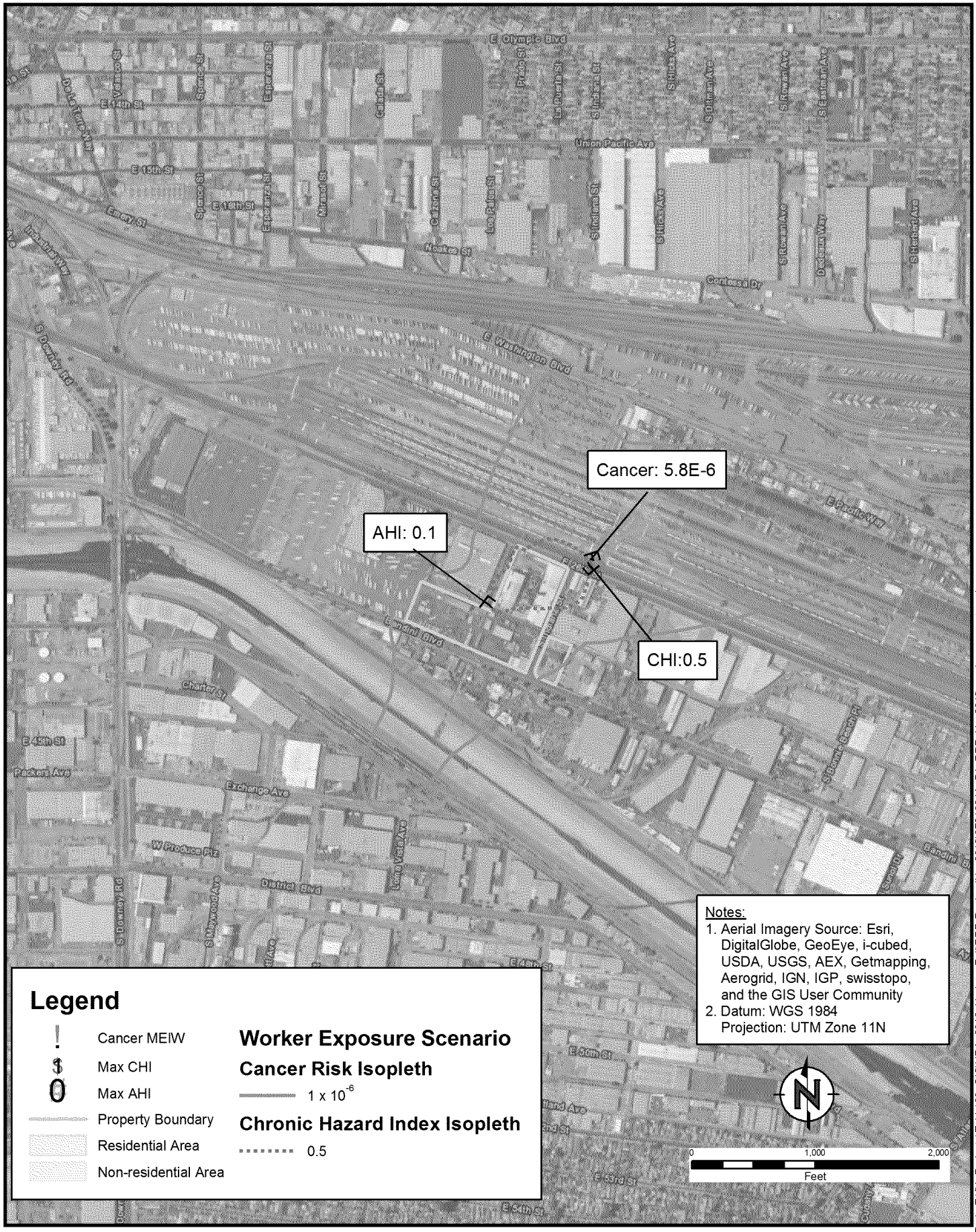

Path: Z:\01_Projects\Exide\03_GIS\HRA_2012_Update_Fall\RRP-RevisedNov2013\0721624A_B1_RRP_Nov2013_worker_current.mxd

ENVIRON

UPDATED BY: XZLiu

DATE: 11/20/2013

Worker Exposure Risks
- Current Condition

Exide Technologies
2700 South Indiana Street, Vernon, CA

Figure
B-1

PROJECT: 07-21624A

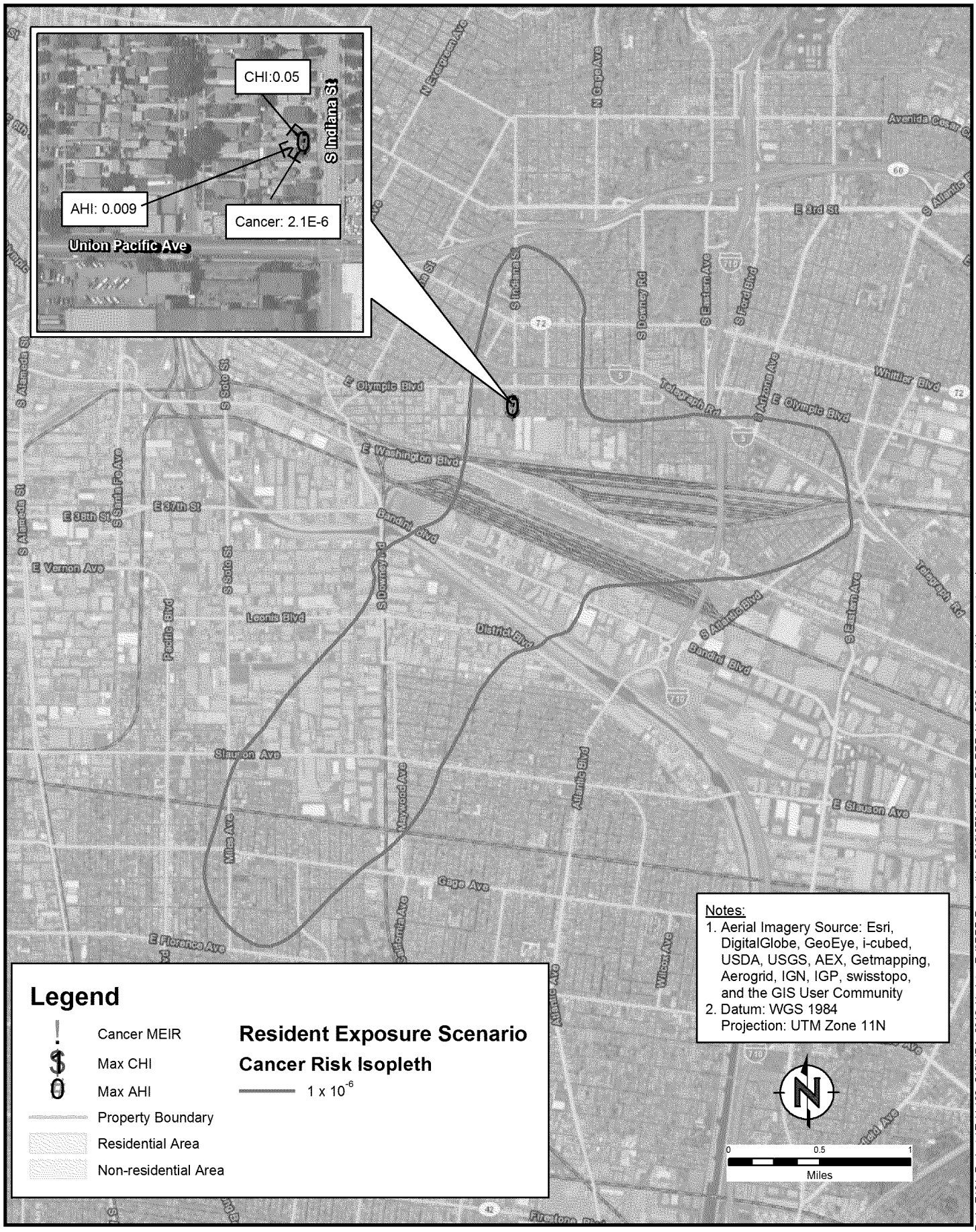

ENVIRON

UPDATED BY: XZLiu

DATE: 11/20/2013

Residential Exposure Risks - Current Condition

Exide Technologies
2700 South Indiana Street, Vernon, CA

Figure
B-2

PROJECT: 07-21624A

Appendix B.d

Updated Emissions Inventory and Health Risk Assessment – AQMD Test Data

Appendix B.d Updated Health Risk Assessment Using AQMD Results

On August 8 and 23, and September 20, 2013, AQMD conducted source tests for the stacks of the Hard Lead Ventilation System (Hard Lead) and Soft Lead Ventilation System (Soft Lead). ENVIRON estimated the health metrics after substituting the emission data presented in Appendix B with the AQMD source test results. The AQMD data are summarized in Tables B.d-1 and B.d-2. All other air toxic emissions are the same as those in Appendix B. The facility wide emission rates used in this analysis are summarized in Table B.d-3. The modeling and risk assessment methods are as described in Appendix B.

Using the results of the AQMD tests for Hard Lead and Soft Lead stacks, the cancer risk at the Maximally Exposed Individual Worker (MEIW) is estimated to be 9.8 in a million or 9.8E-6. The MEIW is at Receptor 1005 (389900, 3763600) and is located in the railyard north of the facility (see Figure B.d-1). The cancer risk at the Maximally Exposed Individual Resident (MEIR) is estimated to be 2.7 in a million or 2.7E-6. The MEIR is at Receptor 1016 (389900, 3764700) and is located in the residential area north of the facility (see Figure B.d-2). Both maximum cancer risks are below the AQMD Rule 1402 Action Risk Level of 25 in a million and public notification threshold of 10 in a million.

The cancer burden is estimated to be 0.2, which is below the AQMD Rule 1402 Action Risk Level of 0.5.

The maximum Chronic Hazard Index (CHI) for the worker scenario is estimated to be 1.9 (below the AQMD Rule 1402 Action Risk Level of 3.0) and is at the same location as the MEIW (see Figure B.d-1). The maximum CHI for the residential scenario is estimated to be 0.1 (below the AQMD Rule 1402 Action Risk Level of 3.0 and public notification threshold of 1.0) and is at the same location as the MEIR (see Figure B.d-2).

The maximum Acute Hazard Index (AHI) [i.e. Point of Maximum Impact (PMI)] at the MEIW is estimated to be 0.2. It is at Receptor 73 (389710, 3763600) and is located on the western fence line near the 26th street entrance (see Figure B.d-1). The maximum AHI for the residential scenario is estimated to be 0.009. It is at the same location as the MEIR (see Figure B.d-2). Both AHIs are below the AQMD Rule 1402 Action Risk Level of 3.0 and public notification threshold of 1.0.

Tables

Table B.d-1 Summary of Source Test Results for Hard Lead - AQMD Test Data
Exide Technologies
Vernon, California

Chemical	CAS	AQMD Aug-Sep 2013 Test Averages [1] (lb/hr)
Lead	7439921	1.64E-02
Arsenic	7440382	1.12E-03
Cadmium	7440439	1.36E-04
Manganese	7439965	1.71E-04
Nickel	7440020	1.67E-04
Chromium	7440473	1.01E-04
Antimony	7440360	8.15E-05
Selenium	7782492	7.40E-05
Barium	7440393	4.04E-04
Zinc	7440666	3.31E-03
Tin	7440315	3.12E-02
Titanium	7440326	1.96E-04
Copper	7440508	8.33E-04
Cobalt	7440484	1.13E-05
Iron	7439896	4.96E-03
1,3-Butadiene	106990	2.43E-02
Benzene	71432	1.19E-01
Acrolein	107028	2.08E-03
Methylene chloride	75092	5.89E-04
MEK	78933	1.73E-03
Chloroform	67663	5.33E-04
Toluene	108883	3.03E-02
Ethylbenzene	100414	6.51E-03
Styrene	100425	1.11E-01
n-Hexane	110543	3.88E-03
Propylene	115071	1.02E-01
Tetrachloroethylene	127184	8.64E-05
Carbon Tetrachloride	56235	8.01E-05
Xylenes	1330207	1.42E-02

P:\E\Exide\HRA 2012 UPDATE\RRP_Revision_Nov2013\[for HARP-Nov2013-RRP-current upper district.xlsx]TBd1_HL

Note:

[1] AQMD. 2013. Source Tests Report 13-307 and 13-308 Conducted at Exide Technologies: Multiple Metal and Toxic Organic Emissions from the Hard and Soft Lead Baghouse Exhaust Stacks. October 7.

ENVIRON

Table B.d-2 Summary of Source Test Results for Soft Lead - AQMD Test Data
Exide Technologies
Vernon, California

Chemical	CAS	AQMD Aug-Sep 2013 Test Averages (lb/hr)
Lead	7439921	1.02E-02
Arsenic	7440382	4.83E-05
Cadmium	7440439	9.20E-05
Manganese	7439965	1.21E-04
Nickel	7440020	6.66E-05
Chromium	7440473	8.76E-05
Antimony	7440360	6.90E-05
Selenium	7782492	1.29E-05
Barium	7440393	1.82E-04
Zinc	7440666	1.73E-03
Tin	7440315	4.35E-02
Titanium	7440326	2.45E-04
Copper	7440508	2.59E-04
Cobalt	7440484	3.68E-06
Iron	7439896	1.73E-02
Beryllium	7440417	1.47E-07
1,3-Butadiene	106990	5.23E-03
Benzene	71432	7.81E-02
Acrolein	107028	1.47E-03
Methylene chloride	75092	3.16E-04
MEK	78933	1.06E-03
Chloroform	67663	3.49E-04
Toluene	108883	1.53E-02
Ethylbenzene	100414	3.04E-03
Styrene	100425	1.08E-02
n-Hexane	110543	6.24E-04
Propylene	115071	4.10E-02
Carbon Tetrachloride	56235	6.77E-05
Xylenes	1330207	1.66E-02

P:\E\Exide\HRA 2012 UPDATE\RRP_Revision_Nov2013\[for HARP-Nov2013-RRP-current upper district.xlsx]TBd2_SL

Note:

[1] AQMD. 2013. Source Tests Report 13-307 and 13-308 Conducted at Exide Technologies: Multiple Metal and Toxic Organic Emissions from the Hard and Soft Lead Baghouse Exhaust Stacks. October 7.

ENVIRON

Table B.d-3 Summary of Facility-Wide Emissions of TACs - AQMD Test Data
Exide Technologies
Vernon, CA

Chemical Name	CAS #	Max Hourly Emission Rate lb/hr	Max Hourly Emission Rate g/s	Annual Emission Rate lb/yr	Annual Emission Rate g/s
1,1,1 -Trichloroethane	71556	0	0	0	0
1,1,2,2-Tetrachloroethane	79345	0	0	0	0
1,1,2-Trichloro-1,2,2-Trifluoroethane	76131	0	0	0	0
1,1,2-Trichloroethane	79005	0	0	0	0
1,1-Dichloroethane	75343	0	0	0	0
1,1-Dichloroethene	75354	2.85E-04	3.59E-05	2.50E+00	3.59E-05
1,2,4-Trichlorobenzene	120821	0	0	0	0
1,2,4-Trimethylbenzene	95636	3.30E-03	4.16E-04	2.89E+01	4.16E-04
1,2-Dibromoethane	106934	0	0	0	0
1,2-Dichlorobenzene	95501	0	0	0	0
1,2-Dichloroethane	107062	0	0	0	0
1,2-Dichloropropane	78875	0	0	0	0
1,3-Butadiene	106990	4.64E-02	5.85E-03	4.07E+02	5.85E-03
1,3-Dichlorobenzene	541731	0	0	0	0
1,4-Dichlorobenzene	106467	0	0	0	0
1,4-Dioxane	123911	0	0	0	0
2-Butanone	78933	1.57E-02	1.98E-03	1.38E+02	1.98E-03
2-Methylnaphthalene	91576	2.41E-03	3.03E-04	2.11E+01	3.03E-04
4-Methyl-2-Pentanone	108101	2.93E-03	3.69E-04	2.57E+01	3.69E-04
Acenaphthene	83329	1.02E-04	1.29E-05	8.97E-01	1.29E-05
Acenaphthylene	208968	2.16E-03	2.72E-04	1.89E+01	2.72E-04
Acetaldehyde	75070	2.02E-02	2.54E-03	1.77E+02	2.54E-03
Acrolein	107028	3.37E-07	4.25E-08	2.96E-03	4.25E-08
Aluminum	7429905	1.66E-01	2.09E-02	1.45E+03	2.09E-02
Ammonia	7664417	2.25E-03	2.83E-04	1.97E+01	2.83E-04
Anthracene	120127	1.83E-04	2.30E-05	1.60E+00	2.30E-05
Antimony	7440360	6.50E-04	8.19E-05	5.53E+00	7.96E-05
Arsenic	7440382	1.51E-03	1.91E-04	1.32E+01	1.90E-04
Barium	7440393	1.75E-03	2.21E-04	1.53E+01	2.20E-04
Benz(a)anthracene	56553	1.80E-05	2.27E-06	1.58E-01	2.27E-06
Benzene	71432	4.00E-01	5.04E-02	3.50E+03	5.04E-02
Benzo(a)pyrene	50328	3.55E-07	4.47E-08	3.11E-03	4.47E-08
Benzo(b)fluoranthene	205992	4.79E-06	6.04E-07	4.20E-02	6.04E-07
Benzo(e)pyrene	192972	2.24E-06	2.82E-07	1.96E-02	2.82E-07
Benzo(ghi)perylene	191242	9.74E-07	1.23E-07	8.53E-03	1.23E-07
Benzo(k)fluoranthene	207089	1.01E-06	1.27E-07	8.84E-03	1.27E-07
Benzyl Chloride	100447	0	0	0	0
Beryllium	7440417	6.04E-05	7.61E-06	5.29E-01	7.61E-06
Bromodichloromethane	75274	0	0	0	0
Bromoform	75252	0	0	0	0
Bromomethane	74839	1.69E-03	2.13E-04	1.48E+01	2.13E-04
Cadmium	7440439	3.93E-04	4.95E-05	3.43E+00	4.93E-05
Carbon Disulfide	75150	1.65E-02	2.08E-03	1.45E+02	2.08E-03
Carbon Tetrachloride	56235	1.48E-04	0	1.29E+00	0
Chlorobenzene	108907	5.55E-04	6.99E-05	4.86E+00	6.99E-05
Chlorodibromomethane	124481	0	0	0	0
Chloro methane	74873	3.46E-03	4.36E-04	3.03E+01	4.36E-04
Chloroethane	75003	4.84E-04	6.10E-05	4.24E+00	6.10E-05
Chloroform	67663	1.29E-03	1.63E-04	1.13E+01	1.63E-04
Chromium	7440473	9.48E-04	1.19E-04	8.28E+00	1.19E-04

ENVIRON

Table B.d-3 Summary of Facility-Wide Emissions of TACs - AQMD Test Data
Exide Technologies
Vernon, CA

Chemical Name	CAS #	Max Hourly Emission Rate lb/hr	Max Hourly Emission Rate g/s	Annual Emission Rate lb/yr	Annual Emission Rate g/s
Chromium VI	18540299	1.12E-04	1.42E-05	9.85E-01	1.42E-05
Chrysene	218019	1.09E-04	1.38E-05	9.59E-01	1.38E-05
Cobalt	7440484	1.24E-04	1.57E-05	1.09E+00	1.56E-05
Copper	7440508	2.72E-03	3.43E-04	2.37E+01	3.41E-04
Dibenz(a,h)anthracene	53703	4.22E-07	5.32E-08	3.70E-03	5.32E-08
Ethylbenzene	100414	1.13E-02	1.43E-03	9.92E+01	1.43E-03
Fluoranthene	206440	6.85E-04	8.63E-05	6.00E+00	8.63E-05
Fluorene	86737	5.40E-04	6.81E-05	4.73E+00	6.81E-05
Formaldehyde	50000	3.44E-02	4.34E-03	3.02E+02	4.34E-03
Hexachloro-1,3-Butadiene	87683	0	0	0	0
Hexane	110543	7.87E-07	9.92E-08	6.90E-03	9.92E-08
Indeno(1,2,3-cd)pyrene	193395	1.69E-07	2.13E-08	1.48E-03	2.13E-08
Lead	7439921	4.89E-02	6.16E-03	4.22E+02	6.08E-03
Manganese	7439965	6.70E-04	8.44E-05	5.82E+00	8.37E-05
Mercury	7439976	1.09E-03	1.37E-04	9.54E+00	1.37E-04
Methylene Chloride	75092	9.05E-04	0	7.93E+00	0
Methyl-t-Butyl Ether (MTBE)	1634044	0	0	0	0
Naphthalene	91203	3.02E-02	3.80E-03	2.64E+02	3.80E-03
Nickel	7440020	8.91E-04	1.12E-04	7.76E+00	1.12E-04
Perylene	198550	0	0	0	0
Phenanthrene	85018	3.45E-03	4.34E-04	3.02E+01	4.34E-04
Phosphorus	7723140	2.79E-03	3.51E-04	2.43E+01	3.50E-04
Pyrene	129000	3.74E-04	4.72E-05	3.28E+00	4.72E-05
Selenium	7782492	1.43E-04	1.80E-05	1.24E+00	1.79E-05
Silver	7440224	8.60E-05	1.08E-05	7.53E-01	1.08E-05
Styrene	100425	1.26E-01	1.59E-02	1.10E+03	1.59E-02
TEQ (Min) as 2,3,7,8-TCDD	1086	8.49E-10	1.07E-10	7.44E-06	1.07E-10
Tetrachloroethene	127184	2.63E-03	3.31E-04	2.30E+01	3.31E-04
Thallium	7440280	3.12E-05	3.93E-06	2.73E-01	3.93E-06
Toluene	108883	8.33E-02	1.05E-02	7.30E+02	1.05E-02
Total PAHs (excl.Naphthalene)	1151	1.25E-08	1.57E-09	1.09E-04	1.57E-09
Total PCBs, as MonoCB	1336363	8.56E-04	1.08E-04	7.50E+00	1.08E-04
Trichloroethene	79016	2.28E-03	2.87E-04	2.00E+01	2.87E-04
Trichlorofluoro methane	75694	0	0	0	0
Vanadium	7440622	1.29E-04	1.62E-05	1.13E+00	1.62E-05
Vinyl Acetate	108054	1.77E-01	2.23E-02	1.55E+03	2.23E-02
Vinyl Chloride	75014	2.80E-04	3.53E-05	2.45E+00	3.53E-05
Xylenes	1330207	3.26E-02	4.11E-03	2.86E+02	4.11E-03
Zinc	7440666	7.70E-03	9.70E-04	6.72E+01	9.66E-04

P:\E\Exide\HRA 2012 UPDATE\RRP_Revision_Nov2013\[for HARP-Nov2013-RRP-current upper district.xlsx]TB.d-3_total

Note:
lb/hr = pounds per hour; lb/yr = pounds per year; g/s = grams per second

ENVIRON

Figures

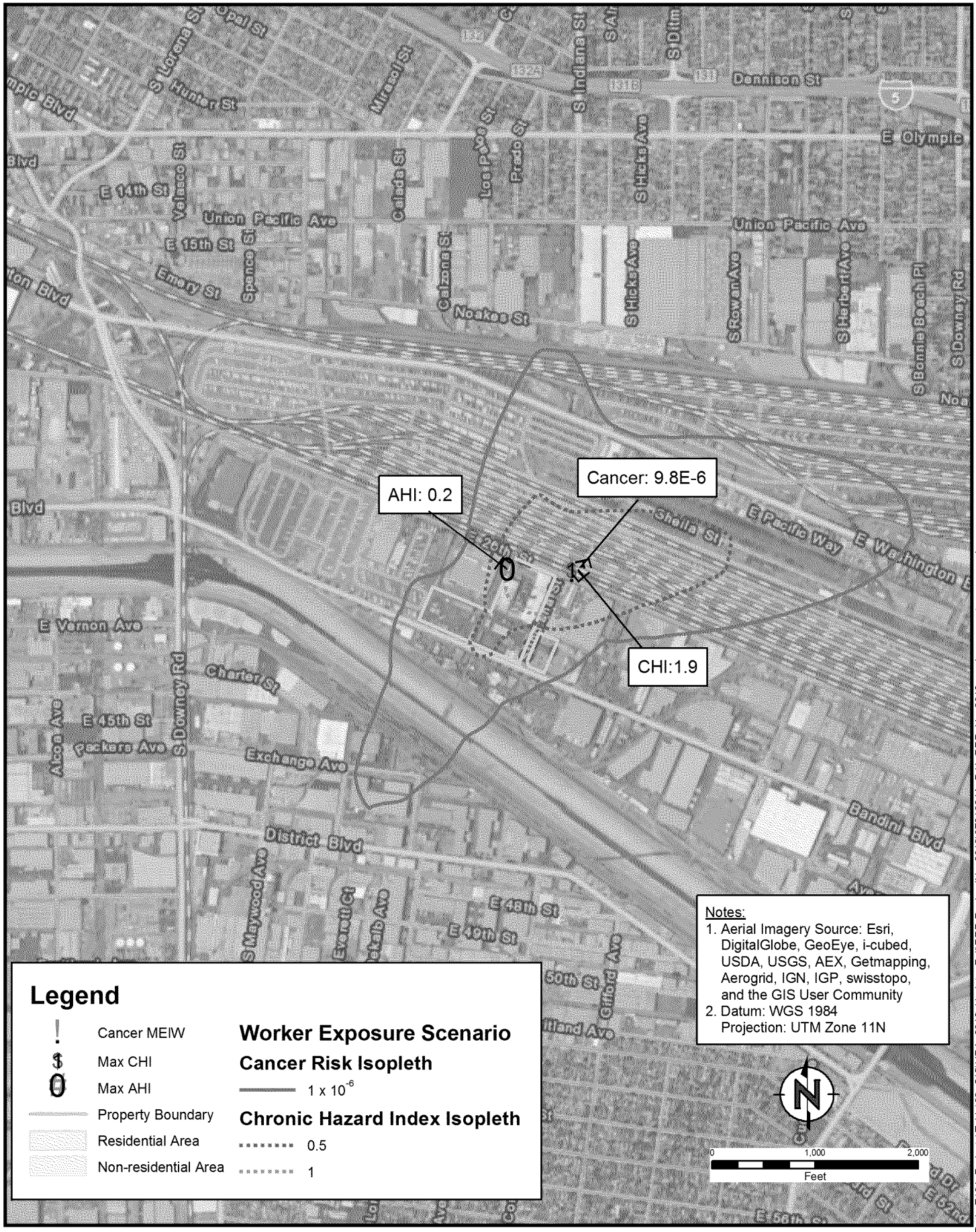

ENVIRON

UPDATED BY: XZLiu

DATE: 11/20/2013

Worker Exposure Risks
- AQMD Test Data

Exide Technologies
2700 South Indiana Street, Vernon, CA

Figure
B.d-1

PROJECT: 07-21624A

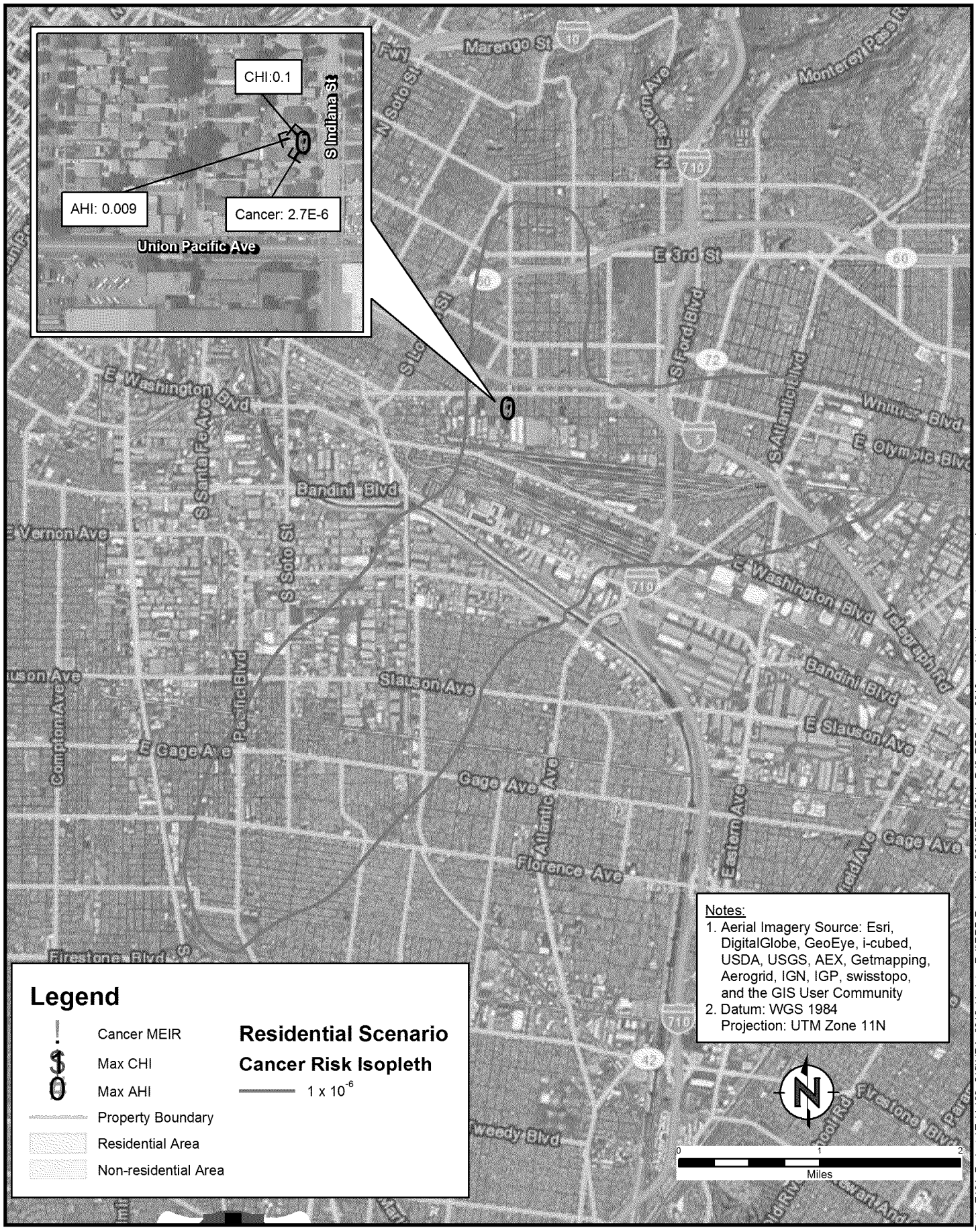

Path: Z:\01_Projects\Exide\03_GIS\HRA_2012_Update_Fall\RRP-RevisedNov2013\0721624A_Bd2_RRP_Nov2013_residential_current_upper.mxd

ENVIRON

UPDATED BY: XZLiu

DATE: 11/20/2013

Residential Exposure Risks
- AQMD Test Data

Exide Technologies
2700 South Indiana Street, Vernon, CA

Figure
B.d-2

PROJECT: 07-21624A

Appendix C

Feasibility Study – SCAQMD Rule 1420.1(o)

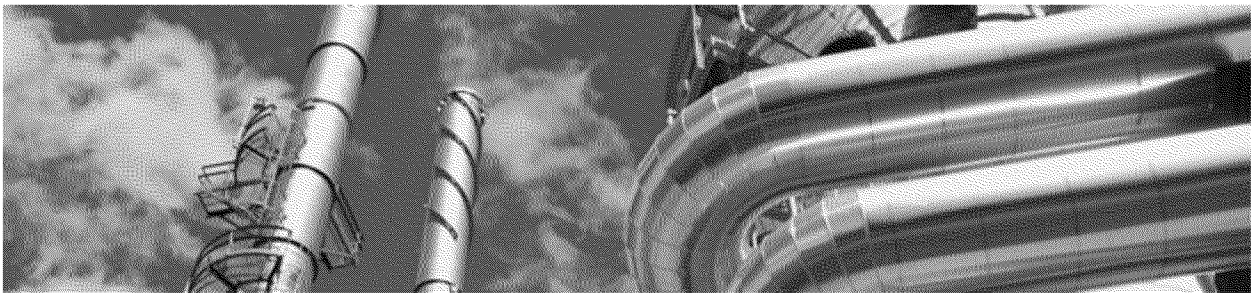

Feasibility Study
SCAQMD Rule 1420.1(o)

Prepared for:
Exide Technologies
Vernon, California

Prepared by:
ENVIRON International Corporation
Irvine and Los Angeles, California

Date:
August 2011

Project Number:
07-26544A

ENVIRON

Contents

		Page
1	Executive Summary	1
2	Introduction	2
2.1	Facility Location	2
2.2	Process Description	2
2.3	Rule 1420.1 Requirements	2
2.4	Ambient Air Quality Monitoring Results	3
3	Feasibility Study Requirements	4
3.1	Current Facility-wide Pb Emission Rate	4
3.2	Characterization of Pb Emission Sources at Exide (Vernon)	4
3.2.1	Process Source Emissions	5
3.2.2	General Ventilation Source Emissions	6
3.2.3	Consideration of Control Options for Process Sources and General Ventilation	6
3.3	Technical Feasibility	6
3.3.1	Determining the Technological Process Source Control Options to Achieve a 0.003 lbs/hr Facility-wide Pb Emission Rate	6
3.3.2	HEPA Filtration	7
3.3.3	WESP as a Process Source Control	8
3.3.4	Fugitive Emission Filtration Units as a General Ventilation Source Control	9
3.3.5	Addressing the Technical Feasibility of WESP and FEF Units	10
3.4	Economic Feasibility of Achieving a 0.003 lbs/hr Facility-wide Pb Emission Rate	11
3.5	Physical Feasibility of Achieving a 0.003 lbs/hr Facility-wide Pb Emission Rate	12
4	Ambient Air Quality Modeling	14
4.1	SCAQMD Modeling Efforts	14
4.2	Exide Modeling Efforts	14
5	Conclusions	17

List of Tables

Table 1.	Current Facility-wide Pb Emission Rates	4
Table 2.	Currently Permitted Control Equipment at Exide	5
Table 3.	WESP Design Parameters	9
Table 4.	BUSCH FEF Parameters	10
Table 5.	Cost Effectiveness Comparison	11
Table 6.	Source Parameters of AERMOD Runs	15
Table 7.	Lead Concentrations at the Monitors Predicted by AERMOD	15

EPA-R9-2016-005534-0025051

Contents (continued)

List of Figures

Figure 1. Site Vicinity Map
Figure 2. Site Plot Plan
Figure 3. Locations of Sensitive Receptors
Figure 4. Site Plot Plan Showing WESP Footprint

List of Appendices

Appendix A. ENVITECH WESP Proposal to Exide Technologies
Appendix B. BUSCH FEF Statement
Appendix C. EPA Draft Cost Impacts for the Secondary Lead Smelting Source Category, including Data Tables
Appendix D. BUSCH FEF-50 Quote
Appendix E. EPA's Draft Summary of the Technology Review for the Secondary Lead Smelting Source Category
Appendix F. HB3151-25 Excess Emissions Calculation

p:\e\exide\1420.1-compliance plan-2011_feasstudy\exide 1420-1 feasibility study.docx

EPA-R9-2016-005534-0025052

1 Executive Summary

Exide Technologies, Inc. (Exide) has commissioned this Feasibility Study to comply with SCAQMD Rule 1420.1(o), which requires Exide to evaluate the technical, economic and physical feasibility of achieving a total Pb emission rate of 0.003 lbs/hour from all point sources if emissions are above 0.12 µg/m^3 averaged over any 30 consecutive days. We assessed available emission control technologies in order to identify the most cost-effective and efficient technology, or combination of technologies, that could potentially achieve a facility-wide 0.003 lb/hr lead stack emission level.

We considered the following technologies for process source controls: (a) fabric filtration, (b) cartridge collectors, (c) HEPA filters as secondary filtration, and (d) Wet Electrostatic Precipitation (WESP). We also considered Fugitive Emission Filtration (FEF) Units (which include inherent secondary HEPA filtration) as a general ventilation control. Exide already widely employs several of these technologies, and thus appropriately analyzed in detail the two technologies it does not employ, namely the WESP and the FEF Units. After a rigorous analysis, we conclude that neither of the technologies is technically feasible to achieve the 0.003 lbs/hr emission level with any reasonable degree of confidence or with vendor guarantees of performance at such low levels.

In addition, we conclude that none of the technologies are economically feasible. Exide is currently achieving emissions rates below the currently required 0.045 lbs/hr -- a 99% point source reduction. As set forth in its Compliance Plan, by implementing certain point source and fugitive reduction measures, Exide reasonably expects to comply with the National Ambient Air Quality Standard (NAAQS) and Rule 1420.1(d)(2) by January 1, 2012. Even assuming that a combination of technologies might achieve 0.003 lb/hr on a facility-wide basis, it is not reasonably necessary to require Exide to further reduce the mass emissions rate to a level that cannot be guaranteed at a total economically infeasible capital cost of over $30 million, or an incremental cost of over $6 million per ton.

Moreover, the facility's space constraints are such that it is not physically feasible to accommodate the potential control technologies within the footprint of the facility.

This Study includes dispersion modeling demonstrating that stack emission control measures already specified in Rule 1420.1 are adequate to attain the 0.15 µg/m^3 ambient lead concentration limit. With stack emissions effectively controlled, if additional control measures are necessary to reduce ambient lead concentrations, those measures should be directed toward fugitive emissions reduction.

EPA-R9-2016-005534-0025053

2 Introduction

2.1 Facility Location

The Exide facility (SCAQMD ID # 124838) is located at 2700 South Indiana Street, Vernon, California. Exide is a secondary lead smelter that recycles lead batteries and other lead-bearing scrap materials. Figure 1 shows the facility and its vicinity. The land use in the immediate vicinity (up to 1.5 kilometers [km] radius) of the facility is industrial and the topography around the facility is primarily flat. The facility's layout showing the locations of the various buildings and the stacks are presented on Figure 2. The nearest residential areas are located approximately 1 km northeast and south of the facility as shown on Figure 3.

2.2 Process Description

Spent lead-acid batteries and other lead-bearing scrap materials are delivered to the facility by trucks, where the batteries and scraps are crushed, separated, and smelted to recover lead and propylene.

The spent lead-acid batteries and lead-bearing scrap are first broken apart and separated into the plastic, lead, and acid components. The plastic is recovered, and the acid is sent to a holding tank. The lead-containing components are transferred into one of the feed rooms, where they are then fed by conveyor to either the Reverberatory (Reverb) furnace (device D119) or the Blast furnace (D128), which are each used to heat the lead until it reaches a molten state.

The lead refining kettles are used to purify the hot, molten lead that is produced during the smelting process. Each kettle sits inside a brick-lined pit, housing natural gas-fired burners. The burners heat the air between the burners and the kettle, thereby heating the kettle. The kettles are continuously heated; however, there are usually only two or three kettles that contain material at any one time. The molten lead in the kettles is repeatedly heated, agitated with a mixer, and allowed to cool, with periodic stirring and additions of refining agents.

The refined lead is then formed into ingots, which are subsequently transferred to the Finished Lead Storage Building.

2.3 Rule 1420.1 Requirements

On November 12, 2008, the United States EPA published the Final Rule in the Federal Register revising the NAAQS from 1.5 $\mu g/m^3$ to 0.15 $\mu g/m^3$ measured over a three-month rolling average.

On November 5, 2010, the SCAQMD Governing Board adopted Rule 1420.1 (Emissions Standards for Lead from Large Lead-Acid Battery Recycling Facilities). Rule 1420.1(d)(2) prohibits a covered facility from discharging lead emissions exceeding 0.15 $\mu g/m^3$ averaged over any 30 consecutive days. The Rule requires covered facilities to implement certain practices and emission control measures to attain the Lead NAAQS and Rule 1420.1(d)(2) standards after January 1, 2012.

Pursuant to Rule 1420.1(o), starting on July 1, 2011, if the facility discharges lead emissions that exceed 0.12 $\mu g/m^3$ averaged over any 30 consecutive days, the facility shall submit to the SCAQMD a Feasibility Study that addresses the technical, economic and physical feasibility of achieving a total facility mass lead emission rate of 0.003 pounds per hour from all lead point sources.

EPA-R9-2016-005534-0025054

2.4 Ambient Air Quality Monitoring Results

Monitoring results indicate that on July 30, 2011 the 30-day average ambient concentration at the facility's North, Northeast, and MID monitors exceeded 0.12 µg/m^3. Therefore, Exide is submitting this Feasibility Study to fulfill the requirements of Rule 1420.1(o). However, as stated in Exide's Compliance Plan submitted in conjunction with this Feasibility Study, many control measures remain in the progress of being implemented and were not completed by the July 30, 2011 trigger date to meet the 0.12 µg/m^3 limit. Exide reasonably believes that it would not have been required to submit this Feasibility Study had all measures (including multiple voluntary "early action" measures) been in place and operational as of July 1, 2011.

EPA-R9-2016-005534-0025055

3 Feasibility Study Requirements

Rule 1420.1(o) requires that the Feasibility Study address the following elements in determining whether the facility can achieve a total Pb emission rate of 0.003 lbs/hour from all stationary sources:

- Technical feasibility,
- Economic feasibility, and
- Physical feasibility

A discussion of each of these elements is provided in the following sections.

3.1 Current Facility-wide Pb Emission Rate

Table 1 summarizes emissions rates from all Pb point sources from Exide's most recent source tests. The results indicate that the total facility Pb emission rate from all point sources is less than the 0.045 lbs/hr limit established by Rule 1420.1(f)(2).

Table 1 Current Facility-wide Pb Emission Rates

APC#	AQMD Device#	Control Device Description	Area Served	Source Test Date	Source Test Measured (dscfm)	Pb Emissions (lb/hr)
10	C38	North Torit	General Ventilation	10/2010	94,599	0.00141
11	C39	South Torit	General Ventilation	1/4 - 6/2011	110,126	0.0036
13	C156/C157	MAC BHs	GV: RMPS, Kettle Burners, Reverb Feed	12/27/2010	103,920	0.000572
7	C48	Material Handling BH	GV: Material Handling & Blast Feed Room	10/12/2010	95,858	0.00115
9	C165/C172	RMPS MAPCO Demister / HEPA	RMPS	11/10 -12/2010	17,270	0.000358
12	C144/C143	Kiln Dryer BH / Cyclone	Kiln (Rotary Dryer)	9/14/2010	10,392	0.0105
S1	C42/C43	Neptune-Venturi Scrubber	Blast & Reverb furnaces	9/8/2010	18,059	0.000175
5	C46	Hard Lead BH	Hard Lead	10/4,5,7/2010	101,832	0.00102
6	C47	Soft Lead BH	Soft Lead	10/2010	85,435	0.000851
Total					**637,491**	**0.020**
						<0.045 limit

While the Pb emission rate from all point sources is more than 50% less than the 0.045 lbs/hr limit, the rate is greater than the 0.003 lbs/hr rate that is the "target level" for this Feasibility Study.

3.2 Characterization of Pb Emission Sources at Exide (Vernon)

There are two general categories of point sources of Pb emissions at the Exide (Vernon) facility. The first source comes from Process Source emissions. The second source comes from

General Ventilation emissions. As of July 1, 2011 Exide had the following air pollution control devices installed for reducing Pb emissions from a variety of sources.

Table 2 Currently Permitted Control Equipment at Exide

Control Device Description	Equipment/Area Controlled
Process Emission Sources	
C40 – baghouse; C41 – baghouse;	Reverb furnace (D119)
C44 – afterburner; C45 – baghouse	Blast furnace (D128)
C42 – venturi scrubber; C43 – tray scrubber; S139 – stack	APC 1 (C40, C41), APC 2 (C44, C45)
Hard Lead baghouse	Lead refining kettles and dross hoppers (D7 – D20), Blast furnace tapping ports and launders (D129 – D134), rotary dryer furnace enclosure (C177)
Soft Lead baghouse	Lead refining kettles and dross hoppers (D24 – D37), Reverb furnace feeders (D117, D118), Reverb furnace tapping ports and launders (D120 – D125), fugitive emissions from Quench Chamber cleanout door (D149)
C143 – cyclone; C144 – baghouse; S145 – stack	Rotary dryer furnace (D115) and screw conveyors (D114, D116)
General Ventilation Sources	
North Torit baghouse	Fugitive emissions from the Smelting and Refining building, fugitive emissions from the Baghouse Row building
South Torit baghouse	Fugitive emissions from the Smelting and Refining building, fugitive emissions from the Baghouse Row building
C156, C157 – MAC baghouses; S158 – stack	RMPS building (C175), lead refining kettle burner stack emissions, rotary dryer hoppers (D109, D110) and conveyors (D111 – D113), South Corridor building (C182)
C159 – cyclone; C160 – baghouse	Fugitive emissions in Blast Furnace Feed Room
Material Handling baghouse	Central Vacuum System A (C159, C160), Central Vacuum System B (C162, C163), Blast Furnace feed hopper (D126)
C165 – packed bed scrubber; C172 – HEPA filter; S166 – stack	Raw Material Preparation System (RMPS) building (C175), Hammermill (D1), Hammermill feed conveyor (D2), Mud holding tanks (D3 – D5)
C162 – cyclone; C163 – baghouse	Fugitive emissions in Blast Furnace Feed Room

3.2.1 Process Source Emissions

Process Source emissions consist of the exhaust from the Rotary Dryer, Blast & Reverb Furnaces, and the Hard & Soft Lead Baghouses. Pb emissions come directly from the feed material processed in these furnaces. The Pb emissions in the exhaust from the furnaces are

controlled by baghouses and subsequently by a wet scrubber prior to discharge to the atmosphere.

The data in Table 1 shows that the total stack exhaust from these sources is approximately 215,000 dscfm with a total Pb emission rate of 0.013 lbs/hr.

3.2.2 General Ventilation Source Emissions

General Ventilation emissions consist of room air that moves through building enclosures in order to meet the negative pressure specified by Rule 1420.1. The data in Table 1 shows that the total stack exhaust from these sources is approximately 400,000 dscfm with a total Pb emission rate of 0.007 lbs/hr.

3.2.3 Consideration of Control Options for Process Sources and General Ventilation

General Ventilation sources must process relatively large quantities of air as compared to the process units in order to meet the requirements for total enclosures. At Exide's Vernon plant, General Ventilation accounts for 65% of the total exhaust flow, but only 25% of the total Pb emissions.

As a result, control options were reviewed to account for the different characteristics of General Ventilation (higher exhaust volume, lower Pb loading) as compared to Process Emissions (lower exhaust volume, higher Pb loading).

3.3 Technical Feasibility

3.3.1 Determining the Technological Process Source Control Options to Achieve a 0.003 lbs/hr Facility-wide Pb Emission Rate

As a threshold matter, in order to assess the feasibility of achieving a 0.003 lbs/hr facility-wide emission rate, it is necessary to set forth the available technological process source control options. If no combinations of the available technologies are capable of meeting the 0.003 lbs/hr limit, then achieving that limit is not technically feasible.

This Feasibility Study builds upon EPA's extensive recent research on process source control technologies potentially applicable for improving lead stack emissions. EPA performed its research during the Risk and Technology Review (RTR) process for revising the National Emission Standards for Hazardous Air Pollutants (NESHAP) for lead smelters. This EPA effort culminated in a Proposed Rule that revised the NESHAP for Secondary Lead Smelting published on May 19, 2011 [76 FR 97]. The rulemaking record includes EPA's Draft Summary of the Technology Review for the Secondary Lead Smelting Source Category [docket item EPA-HQ-OAR-2011-0344-0055] which is attached as Appendix E. In reviewing all the technologies deployed across the industry for the control of lead stack emissions currently and recent developments in those technologies, EPA identified the suite of potential control technologies to include the following.

- Fabric filtration (baghouses of various types and cloth media)
- Cartridge collectors

- HEPA filters as add-on secondary filtration subsequent to fabric filters or cartridge collectors
- Wet Electrostatic Precipitation (WESP)

EPA not only considered the technologies currently applied in this industry but also, "technologies employed by similar industries, and reviewed new or updated NESHAPs for other source categories." [EPA docket item 0055, page 4] We concur with this evaluation and are aware of no other available cost-effective emission control technologies. Thus, this Feasibility Study appropriately evaluates the four EPA-recognized process-source control technologies.

Of the EPA technologies, Exide already employs fabric filtration, with the highest quality polytetrafluoroethylene (PTFE) membrane-type filter bags, and two cartridge collectors. Additionally, Exide has installed secondary HEPA filtration on the battery breaker scrubber, rotary dryer baghouse, and the facility's two cartridge collectors, though the degree of improvement resulting from the installations on the rotary dryer baghouse and cartridge collectors is not yet known pending emission testing.

With fabric filtration and HEPA cartridges already installed, we herein examine the two remaining EPA-identified process control technological approaches for improving the facility's lead stack emissions, namely, (i) the wider deployment of secondary HEPA filtration and (ii) Wet Electrostatic Precipitation (WESP). These measures are considered in the following Sections.

3.3.2 HEPA Filtration

Of the two remaining EPA-identified process control options, the most cost-effective is wider deployment of secondary HEPA filtration. The degree of emission reduction that can be achieved by HEPA filters on this industry's stack emissions is unclear and expectations vary widely. While HEPA filters are rated by definition to filter 99.97% of particles at a 3 micron size, it is not appropriate to assume or estimate that placing a HEPA filter downstream of a fabric filter or cartridge collector will reduce lead emissions by a further 99.97%. This is because some relatively significant fraction of the lead emissions exiting a fabric filter will be in the "condensable" size range, that is, material that passes through the filter in the stack testing apparatus and subsequently caught in the wet impingers in the test train. Material small enough to pass through the stack testing filter is also small enough to pass through a HEPA filter. EPA, for example, found in its analysis of the industry's emission data that "HEPA filters used downstream of a baghouse achieve approximately 20 percent lower outlet concentrations than baghouses alone." [EPA docket item 0055, page 5]. The District established a higher range of expectation in its calculation of the expected improvement from installing HEPA filters downstream of the Exide Vernon facility's cartridge collectors. The District estimated that such installation would reduce lead emissions by 70.8% and result in outlet lead concentrations downstream of the HEPA filters of 2.715 µg/dscm [see document "HB3151-25 Excess Emissions" from Case 3151-25, attached as Appendix F]. Thus, taking the District's calculations at face value, the range of potential improvement by installation of HEPA filtration is 20 to 71%.

Preliminarily, we consider the installation of HEPA filtration downstream of all sources at the Exide Vernon facility. Per the tabulation in Table 1, total exhaust flow is 637,491 dscfm with current actual facility-wide lead emissions of 0.02 lb/hr vs. 0.045 lb/hr allowed. On a mass

basis, even assuming the highest end of the expected range of improvement (71%) due to HEPA installation, facility wide emissions would be 0.02 x (1-0.71) = 0.0058 lb/hr, which is double the 0.003 lb/hr target level for this study. A 71% reduction in the 0.045 lb/hr allowable emission rate would be 0.013 lb/hr, or more than four times the 0.003 lb/hr target. Alternatively, assessing the issue from a concentration basis, the District's 2.715 µg/dscm expected lead concentration downstream of HEPA filtration, if applied to the total facility-wide flow of 637,491 dscfm, would result in facility-wide lead emissions of 0.0065 lb/hr, which is more than twice the target of this Feasibility Study.

In summary, secondary HEPA filtration, even using the high end of expected improvement, still falls well short of the 0.003 lb/hr target for this study. At any other lower degree of HEPA improvement, the gap between the result and 0.003 lb/hr is even wider. In addition, HEPA filtration is not suitable for installation on the hot and moist exhaust gas flow from the facility's direct furnace metallurgical exhaust (Neptune Scrubber), though we included that source in the above evaluation in order to be conservative.

HEPA filtration alone is insufficient to approach 0.003 lb/hr on a facility-wide basis. In particular, in the sections to follow we have considered the most cost-effective combination which would employ WESP to those sources least amenable to HEPA filtration (the process sources) and to enough of the flow from the facility to potentially bring the overall total emission rate under 0.003 lb/hr.

The following two sections (3.3.3 and 3.3.4) introduce both a Process Source Control option (WESP) and a General Ventilation Source Control Option (Fugitive Emission Filtration). Thereafter, Sections 3.3.5, 3.4, and 3.5 address whether these options are technically, economically and physically feasible means of achieving a 0.003 pounds per hour total facility mass emissions rate.

3.3.3 WESP as a Process Source Control

Exide is currently controlling emissions from the blast furnace, reverb furnace, direct hooding serving those furnaces (the hard and soft lead ventilation systems, and the rotary dryer are process sources) using baghouses equipped with polytetrafluoroethylene membrane-type filter bags. Exide fitted the Rotary Dryer Baghouse with secondary HEPA filtration on June 30, 2011. The emission rate for this unit given in Table 1 does not include the degree of improvement from this secondary filtration installation as testing has not yet been completed. Exhaust from the direct blast and reverb furnace is further currently controlled by a wet scrubber downstream of their respective baghouses. For additional reducing Pb emissions from these Process Sources, Exide considered a Wet Electrostatic Precipitator (WESP) as a secondary control option as this is the only technology identified with the potential to achieve emission rates as low as that targeted by this Feasibility Study.

Exide provided process data such as flow rate, Pb loading, moisture content, and exhaust temperature to Envitech so that Envitech could provide Exide a proposal for reducing emissions from Process Sources. Envitech was the vendor that supplied the only WESP currently installed at a secondary lead smelting facility. In a June 16, 2011 e-mail from Andy Bartocci to Russell Kemp, Envitech recommended that "the non-process ventilation sources be treated by another means due to the large volumetric flow rate." Based on Envitech's analysis of the

operating conditions at Exide's Vernon plant, Envitech provided the following proposed design for control of the process source subset.

In addition, an estimate of the annual operating cost of the WESPs is tabulated below. This estimate can be found in the Cost Impacts analysis tables for Secondary Lead NESHAP Docket Item EPA-HQ-OAR-2011-0344-0040.1 (Proposal May 19, 2011). A copy of US EPA's Cost analysis and data tables is included in Appendix C. US EPA also provided an estimate of the installed cost for a WESP that was in good agreement with the cost estimate provided by Envitech.

Table 3 WESP Design Parameters

Parameter	Existing Configuration	Proposed Design
Stack Flow (dscfm)	215,879	215,879
Pb Concentration (gr/dscf)	1.1E-6 to 8.5E-6	2.7E-7 to 4.9E-7
Pb Rate (lbs/hr)	0.014	0.001
Installed Cost	N/A	$30,000,000-Envitech $33,000,000-USEPA
Annual Operating Cost	N/A	$712,500 – Envitech, verbal $1,650,000-USEPA
Footprint (sq. ft)	N/A	7,500

The Envitech proposal calls for two (2) trains of five (5) WESPs each, for a total of ten (10) WESPs. Envitech's proposal is included in Appendix A. Each train would handle half of the combined gas flow from these sources and would have one stack and two induced draft fans.

3.3.4 Fugitive Emission Filtration Units as a General Ventilation Source Control

Baghouses control fugitive emissions from Material Handling operations, Feed Rooms, and Raw Material areas. General ventilation sources are controlled using cartridge collectors (Torits). The addition of the HEPA after-filters for the Torits was completed in August 2011. Test data to indicate performance subsequent to this addition are not yet available. Based on the large volumetric flow rate from these general ventilation sources, Envitech recommended that a non-WESP option be considered for secondary control of these sources.

For technology with the potential to improve control of the General Ventilation Sources, Exide investigated Busch International Fugitive Emission Filtration (FEF) Units. These units are specially designed to reduce particulates contained in fugitive emissions and general ventilation sources that typically have relatively low particulate loadings when compared to the particulate loading found in process source exhaust. Busch FEF units have integral secondary HEPA filtration as an option and this configuration is the one pursued for this study. Based upon a review of industry data, and specifically of the lead emission concentrations achieved at the Quemetco facility (also in South Coast), Busch FEF units are achieving, in practice, exhaust lead concentration levels among the lowest in the industry. These units are not, however, amenable to installation on the process sources.

Exide provided general ventilation source data such as flow rate, Pb loading, moisture content, and exhaust temperature to Busch International so that they could provide a proposal for reducing emissions from General Ventilation Sources. Based on Busch's analysis of the operating conditions at Exide's Vernon plant, Busch was not able to propose a design or extend any performance guarantees for reductions in emissions below the low levels already being

achieved by the existing filtration equipment at the facility. A copy of their letter is included with this report and is found in Appendix B. That is, based on the wide range of potential improvement (possibly as little as 20%, per EPA as cited above), Busch could not guarantee any improvement.

The largest unit that Busch manufactures is FEF-50, which can handle 50,000 scfm of exhaust gas. Given that Exide has approximately 400,000 scfm of total exhaust from General Ventilation sources, Exide would need a minimum of eight (8) FEF-50 units. Exide received a quote from Busch for a single FEF-50 which is included in Appendix D. In order to continually process this exhaust stream, Exide would need to purchase additional units to remain on standby.

Table 4 BUSCH FEF Parameters

Parameter	Existing Configuration	Proposed Design
Stack Flow (dscfm)	401,777	401,777
Pb Concentration (gr/dscf)	2.2E-6 to 10.1E-6	2.2E-6 to 10.1E-6
Pb Rate (lbs/hr)	0.007	0.007
Installed Cost	N/A	$2,400,000
Annual Operating Cost	N/A	Operating costs not expected to be significantly higher or different than that being currently experienced with the existing control devices.
Footprint (sq. ft)	N/A	2,880 – 4,200

3.3.5 Addressing the Technical Feasibility of WESP and FEF Units

In order to assess the technical feasibility of achieving a 0.003 lbs/hr facility-wide emissions rate, it is necessary to look at all secondary control options as a whole. Based on the assessments provided by Envitech for using WESPs to control Process Sources and Busch International for using FEF HEPA Units to control General Ventilation Sources, it is not technically feasible to achieve a facility-wide Pb emission rate of 0.003 lbs/hr.

A key element of technical feasibility is the ability to craft engineering performance specifications in line with the target emission goal and have vendors guarantee performance consistent with such specifications. Through exchanges with Busch International, we have been unable to secure the necessary guarantees for performance that, when combined with WESP exhaust performance for the process sources, would meet a facility-wide point source Pb emission rate of 0.003 lb/hr. It is possible that such a combined installation (WESP on process sources, HEPA on all others) could achieve emissions in the vicinity of 0.003 lb/hr, but such performance could not be reasonably expected on a repeatable basis nor backed by vendor guarantees. While this particular combined configuration is employed by Quemetco, the Exide Vernon facility is exhausting much more air – the fundamental reason that a 0.003 lb/hr lead emission level cannot be expected even when using the same technologies. From a performance guarantee perspective, it is conceivable that the application of WESP to the entire facility flow could result in a facility-wide emission level guarantee below 0.003 lb/hr but such facility-wide application of the WESP technology was not the recommendation of the WESP vendor which recommends consideration of that technology to address the specific challenges of process gases having the potential to contain ultrafine particulate condensed from gaseous metals. Costs to deploy WESP technology facility-wide would be well more than double those assessed for economic feasibility in Section 3.4 below.

3.4 Economic Feasibility of Achieving a 0.003 lbs/hr Facility-wide Pb Emission Rate

In performing the economic assessment, it is necessary to consider the economics of the entire suite of control options. A particular secondary control option may be economically feasible on its own but may not be sufficient on its own to achieve a facility-wide emission rate of 0.003 lbs/hr. All options must be evaluated as a total package in completing the environmental assessment.

Table 5 shows the cost comparison for the WESP and BUSCH units combined. For comparison, we also show the Cost Analysis for the WESP technology only that was provided by USEPA for the NESHAP Risk and Technology Review found in Appendix C. This column is for the deployment of the WESP for the industry as a whole.

Table 5 Cost Effectiveness Comparison

Parameter	Exide	EPA NESHAP (4)
Capital Costs		
WESP (1)	$30,000,000	$400,000,000
Busch	$2,400,000	n/a
Subtotal	**$32,400,000**	**$400,000,000**
Annualized Capital Cost		
WESP	$3,000,000	$36,000,000
Busch	$240,000	n/a
Subtotal	**$3,240,000**	**$36,000,000**
Annual Operating Costs		
WESP (2)(3)	$712,500	$9,500,000
Busch	$0	n/a
Subtotal	**$712,500**	**$9,500,000**
Total Annualized Costs		
WESP	$3,712,500	$45,500,000
Busch	$240,000	n/a
Subtotal	**$3,952500**	**$45,500,000**
Total Pb Reductions		
lbs/yr	1,140	
tons/yr	0.57	13.8
Cost per Ton Pb Reduction		
$/ton Pb Removed		
Exide-(WESP + Busch) / EPA-WESP	$6,900,000	$3,300,000
Exide-(WESP) / EPA-WESP	$6,500,000	$3,300,000

(1) In EPA's draft Residual Risk MACT docket, their estimate for the Capital Cost of a WESP for the Vernon facility was $33,000,000. See docket item 0040.1.
(2) EPA's estimate for Annual Operating Costs was $19,000,000. In discussions with Andy Bartocci of Envitech, we understand that EPA may have included the RTO in the costs. Accordingly, we have reduced the EPA's operating cost estimate by 50%.
(3) Exide Annual Operating Costs are estimated as the ratio of the EPA's Operating Cost to Capital Cost.
(4) Note, Capital and Operating costs in this column for the EPA NESHAP study are for aggregate costs on an industry-wide basis to deploy the WESP technology at 13 facilities.

The SCAQMD adopted Rule 1420.1 in order to bring the SCAQMD into compliance with the revised federal NAAQS for lead. Other than assessing annual compliance cost, SCAQMD did not perform a cost-effectiveness analysis for the Rule. In adopting the Rule, SCAQMD required a facility mass emissions rate of 0.045 lbs/hr, which, combined with other Rule measures and

voluntary compliance measures to address fugitive emissions, was found sufficient to achieve the NAAQS. The 0.045 lbs/hr number represents a 99% point source reduction, and further reductions are not economically reasonable or feasible.

EPA has also evaluated the cost effectiveness of the WESP technology (the larger cost element in the above tabulation) as part of the proposal for revisions to the National Emission Standards for Hazardous Air Pollutants (NESHAP) for Secondary Lead Smelting [76 FR 97, May 19, 2011]. EPA's estimated capital cost for installation of a WESP at the Exide Vernon facility was $33 million which is very near the $30 million quoted by Envitech. EPA estimates the cost effectiveness as $3.3 million per ton of reductions in metal HAP emissions (mainly lead compounds).

EPA concluded that these costs were too high to warrant adoption of WESP technology as a NESHAP component, specifically saying:

> *"…the costs for these additional controls are high. Therefore, we are not proposing a requirement for the installation of a WESP under this ample margin of safety analysis."*
>
> [76 FR 97, May 19, 2011 at page 29058]

As was stated in Section 3.3.4, the combination of WESP control for Process Sources and FEF controls for General Ventilation Sources was not technically feasible in achieving a 0.003 lbs/hr limit. In addition, the cost to reduce Pb using the technology reviewed in this study for the Vernon facility are more than double the cost that EPA determined to be too high, primarily because the emission performance currently at the Exide Vernon facility is already better than industry-wide typical performance. That is, deployment of the WESP technology at Exide Vernon would be even less cost effective than deployment for the industry as a whole, because there are fewer emissions to capture by such very expensive technology.

The data presented in this section demonstrate that this combination of controls is not economically feasible in achieving this emission rate. A key element of economic feasibility is also the ability of companies to deploy capital in ways that have certainty of outcome. As noted above, the controls for achieving the general ventilation emission reductions cannot be guaranteed by the vendor to achieve the target levels of reductions. The absence of such guarantees renders the commitment of such a large capital expenditure economically infeasible.

3.5 Physical Feasibility of Achieving a 0.003 lbs/hr Facility-wide Pb Emission Rate

A plot plan showing the configuration of the Exide Vernon facility is shown in Figure 4. This plot plan shows the configuration once the pending "Baghouse Row" enclosure is fully constructed. After this occurs all stationary sources of lead will be operating in total enclosures that will be vented to air pollution control devices.

In addition to the location of buildings, the plot plan also shows the fenceline and the space that would be available for installation of any secondary control devices. A WESP control configuration would consist of two (2) trains of five (5) WESPs each, for a total of ten (10) WESPs. This WESP configuration would occupy and require a footprint of 7,500 square feet.

Each Busch FEF unit has dimensions of 30 feet by 12 feet. The overall FEF footprint for 8 units would be at least 65 feet by 65 feet or 4,225 square feet.

Figure 4 shows the plot plan with the footprint of two trains of five WESPs and eight FEF units superimposed on it. As the graphic shows, there is very little land area available in which to construct and operate the WESPs and FEF units on site. The location indicated on the figure for these installations blocks access to key operations and would not allow the shipment of lead from the shipping warehouse at the northeast corner of the facility and recovered plastic from the north end of the RMPS building.

Additionally, the available land area is used for truck traffic and other operating equipment on site. As such the available “inactive” land area, space that is not currently used, is even smaller. There is not enough “inactive” land area available for locating two trains of five WESPs and eight FEF units.

Therefore, the data presented in this section demonstrate that this combination of controls is not physically feasible in achieving this target emission rate.

EPA-R9-2016-005534-0025065

4 Ambient Air Quality Modeling

4.1 SCAQMD Modeling Efforts

In its review of Rule 1420.1, the SCAQMD's Stationary Source Committee (SSC) reviewed an ambient air quality modeling analysis performed by SCAQMD staff regarding lowering the facility-wide lead point source emission rate from 0.045 lbs/hr to 0.003 lbs/hr.

At the time that the SCAQMD conducted its modeling, Exide was conducting a series of source tests to collect up-to-date emissions data for use in updating its health risk assessments. The emission rates available to the SCAQMD was 1-2 years old and did not take into account the equipment improvements that had been made in the intervening time.

Nevertheless, even using this older emissions data, the SSC concluded that…

> *"the other lead-acid battery recycling facility (Exide) can achieve the new lead standard through controlling lead point source emissions to 0.045 lbs/hr and strict adherence to housekeeping provisions of PR 1420.1. At this point, there is not sufficient information to substantiate the need to require this facility (Exide) to go beyond an expected 99% point source reduction at an additional cost of $15 to $20 million."*

4.2 Exide Modeling Efforts

In order to confirm the SCAQMD's analysis and update the results using the most recent source test emissions data and the revisions to buildings and stacks, Exide conducted its own ambient air quality modeling. US EPA's AERMOD dispersion modeling runs were made for two scenarios to evaluate the impacts that the Pb reduction measures currently under construction would have on the ambient Pb concentrations measured at the monitors located at and around the fenceline of the Vernon facility. Inputs to AERMOD included:

- Pb emission rates (lbs/hr) from Point Sources
- Scenario 1: using the rates measured from source tests conducted in late 2010 and early 2011 at the facility;

Scenario 2: considering the control efficiencies of the Wet Electrostatic Precipitator (WESP) to be installed for Kiln Dryer Baghouse, Neptune-Venturi Scrubber, Hard Lead Baghouse, and Soft Lead Baghouse, and for HEPA Busch and HEPA Busch for North Torit, South Torit, MAC Baghouse, and Material Handling Baghouse upon the emission rates in Scenario 1.

- Building profile for the new "Baghouse Row" enclosure was used for scenarios 1 and 2;
- Stack heights for the North Torit, South Torit, and MAC Baghouse were increased from 79 feet to 120 feet for scenarios 1 and 2;
- Emissions from fugitive sources were set to zero for scenarios 1 and 2. Once the construction of the "Baghouse Row" building is completed, Pb emissions from fugitive sources will be vented to control devices and should not have any significant impacts, if any, at the ambient monitors.

Table 6 Source Parameters of AERMOD Runs

Source ID	UTM Coordinates (m)		Emission Rate (Scenario 1)	Emission Rate (Scenario 2)	Release Height	Temp	Velocity	Stack Diameter
	X	Y	(g/s)		(m)	(K)	(m/s)	(m)
MAPCO	389705.7	3763538	8.05E-05	8.05E-05	19.35	299.48	4.55	1.09
MAT_STOR	389722.7	3763488	1.18E-03	5.91E-05	34.14	300.93	14.14	2.13
SOFTLEAD	389750	3763554	8.38E-04	4.19E-05	34.14	318.15	14.10	2.03
HARDLEAD	389729.9	3763505	8.35E-04	4.18E-05	34.14	311.76	17.17	2.03
DRYER_BH	389769.8	3763525	1.32E-03	6.61E-05	36.6	375.22	7.47	0.91
NEPTUNE	389751.4	3763527	2.20E-05	1.10E-06	34.14	332.89	8.27	1.16
NOR_CART	389790.5	3763550	3.60E-04	1.80E-05	36.6	298.50	11.29	2.13
SOU_CART	389789.3	3763547	5.29E-04	2.65E-05	36.6	298.89	15.29	2.13
MAC_BH	389740.1	3763479	2.36E-04	1.18E-05	36.6	307.44	18.06	1.82
			0.0054	**0.00035**	**g/s**			
			0.043	**0.003**	**lbs/hr**			

The modeling results are summarized in Table 5.

Table 7 Lead Concentrations at the Monitors Predicted by AERMOD

Scenario #	Lead Concentrations (µg/m^3)						
	SW_Monitor	SE_Monitor	NE_Monitor	On-Site North	REHRIG	Railway	CP_Monitor
Scenario 1	0.00765	0.00338	0.0437	0.02403	0.04657	0.01339	0.0071
Scenario 2	0.00064	0.00091	0.00689	0.00348	0.00647	0.00134	0.00042

For these modeling runs, the emission rates were based on source tests from late 2010 through early 2011. Additional source testing has been in progress as part of the update for the AB2588 HRA. The emission rates that were used in this modeling did not reflect the improvements due to the recent modifications to the air pollution control equipment. The total facility-wide emission rate for all stationary sources used in the modeling was 0.043 lbs/hr. This is greater than the current actual 0.020 lbs/hr facility-wide rate when the most recent source tests are taken into account, but it is still less than the 0.045 lbs/hr limit set by the rule – indicating that the 0.045 lb/hr facility-wide point source limit established in the Rule is adequate to insure compliance with the ambient standards.

Thus, the modeling results presented in this Study reflect a worst case scenario when the Vernon plant is emitting lead at a rate just below the Rule limit. As the actual facility-wide emission rate is even less than the modeled rate, the ambient impacts would be less than what are reported here, by approximately a factor of two.

For Scenario #1 (consistent with the 0.045 lb/hr facility-wide allowable emission rate), the maximum predicted ambient concentration at a residential receptor is only 0.005 µg/m^3 which is only 3 percent of the 0.15 standard. The maximum predicted ambient concentration at the maximum off-site receptor was only 0.08 which is only 50 percent of the 0.15 standard. That is, stack impacts from emissions consistent with the current 0.045 lb/hr emission level are already contributing less than half the 0.15 µg/m^3 standard, and even less given that actual stack emissions are currently less than half the 0.045 lb/hr limit. Current actual and allowed stack

emission rates are not a hindrance to achieving 0.15 μg/m^3 at the facility's ambient monitors and stack impacts at residences are essentially negligible.

The key point of this modeling exercise is to point out that it is not necessary to force the facility-wide lead stack emission rate to 0.003 lb/hr in order to achieve attainment of the NAAQS. Even with stack emissions from the facility just under the 0.045 lb/hr facility wide emission limit of Rule 1420.1, projected impacts are much less than one half of the 0.15 μg/m^3 ambient level. Consideration of the feasibility of the 0.003 lb/hr facility-wide stack emission level can only be made in the context of the purpose of the rule from which this feasibility study was commissioned. In that context, this modeling demonstrates that additional stack emissions reductions are not expected to further reduce ambient lead concentrations. Should Exide not meet the 0.15 μg/m^3 standard, resources should be directed to towards reducing fugitive emissions rather than stack emissions.

EPA-R9-2016-005534-0025068

5 Conclusions

Based on the data presented in this study, no combination of Lead emission control technologies is currently available for which vendors will provide performance guarantees that can achieve a facility-wide emission rate of 0.003 lbs/hr from all point sources, thereby rendering such technologies technically infeasible. In addition, the technologies are not economically feasible because their installation would require capital expenditures in excess of $30 million and annual operating expenses of nearly $2 million, without expected contribution to the facility's ambient concentration compliance. Moreover, space constraints at the Vernon facility render installation of the technologies physically infeasible.

Exide's existing measures (some yet to be fully implemented) are sufficient to meet the Rule 1420.1 facility-wide emission rate requirement of 0.045 lbs/hr as well as attainment with the ambient Pb concentration limit of 0.15 $\mu g/m^3$. If for any reason Exide does not meet the ambient standards, in its Compliance Plan Exide has proposed to implement certain measures that are expected to further reduce emissions. Exide's Compliance Plan measures (both "early action" and contingent, as set forth in the Compliance Plan) are appropriately targeted towards fugitive emissions, which primarily drive ambient concentrations.

Accordingly, it is concluded that achieving a 0.003 lb/hr facility-wide lead emission rate level for the Exide facility in Vernon, California, is not technically, economically or physically feasible.

EPA-R9-2016-005534-0025069

Figures

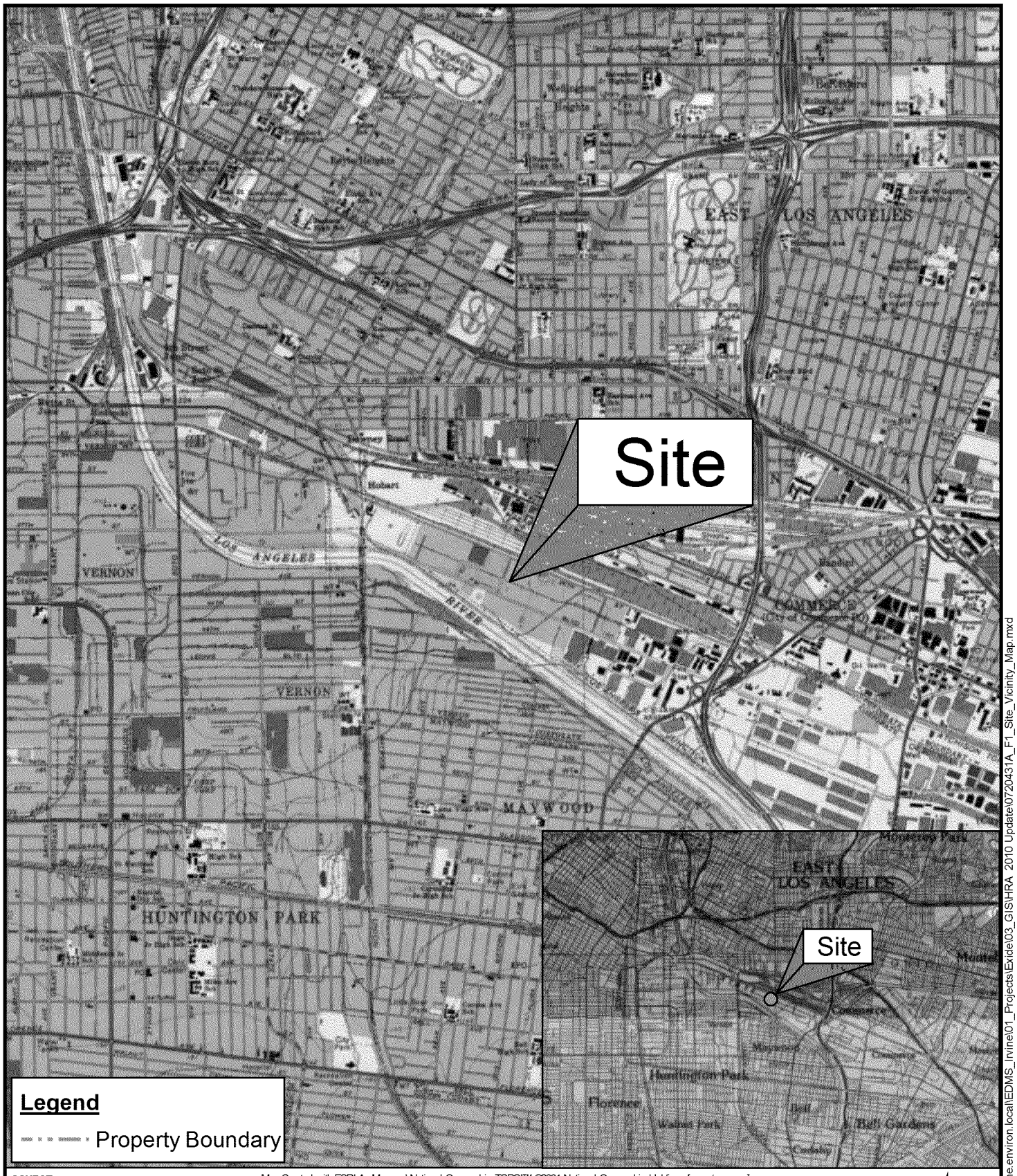

SOURCE:
U.S.G.S. 7.5 minute series (topographic)
Los Angeles, CA Quadrangle
National Geographic TOPO!
Seamless, scanned images of
USGS paper topographic maps
© 2010 National Geographic Society

Map Created with ESRI ArcMap and National Geographic TOPO!™ ©2001 National Geographic Holdings [www.topo.com]

0 0.5 1 MILES

2,500 0 2,500 5,000 7,500 10,000 FEET

CONTOUR INTERVAL 40 FEET
NATIONAL GEODETIC VERTICAL DATUM OF 1929
1:39,382.23

FILE: \\irvine06.irvine.environ.local\EDMS_Irvine\01_Projects\Exide\03_GIS\HRA 2010 Update\0720431A_F1_Site_Vicinity_Map.mxd

ENVIRON

DRAFTED BY: MMcMeechan | DATE: 9/10/2010

Site Vicinity Map

Exide Technologies Facility
2700 South Indiana Street, Vernon, California

Figure 1

PROJECT: 07-20431A

ENVIRON

Site Plot Plan

Exide Technologies Facility
2700 South Indiana Street, Vernon, California

Figure 2

DRAFTED BY: SSHIN | DATE: 9/10/2010 | PROJECT: 07-20431A

\\IRVINE06.IRVINE.ENVIRON.LOCAL\EDMS_IRVINE\01_PROJECTS\EXIDE\04_CAD\FIGURES\07-20431AF02 SITE PLOT PLAN.DWG

ENVIRON

Locations of the Nearest Residential Receptors
Exide Technologies Facility
2700 South Indiana Street, Vernon, California

0 650 1,300 2,600 Feet

DRAWN BY: AV
PLOT DATE: XX/XX/XXXX
CONTOUR DATE REVISED: 06/06/2008
CONTRACT NUMBER: 07-20431A

Figure 3

FIGURE 4

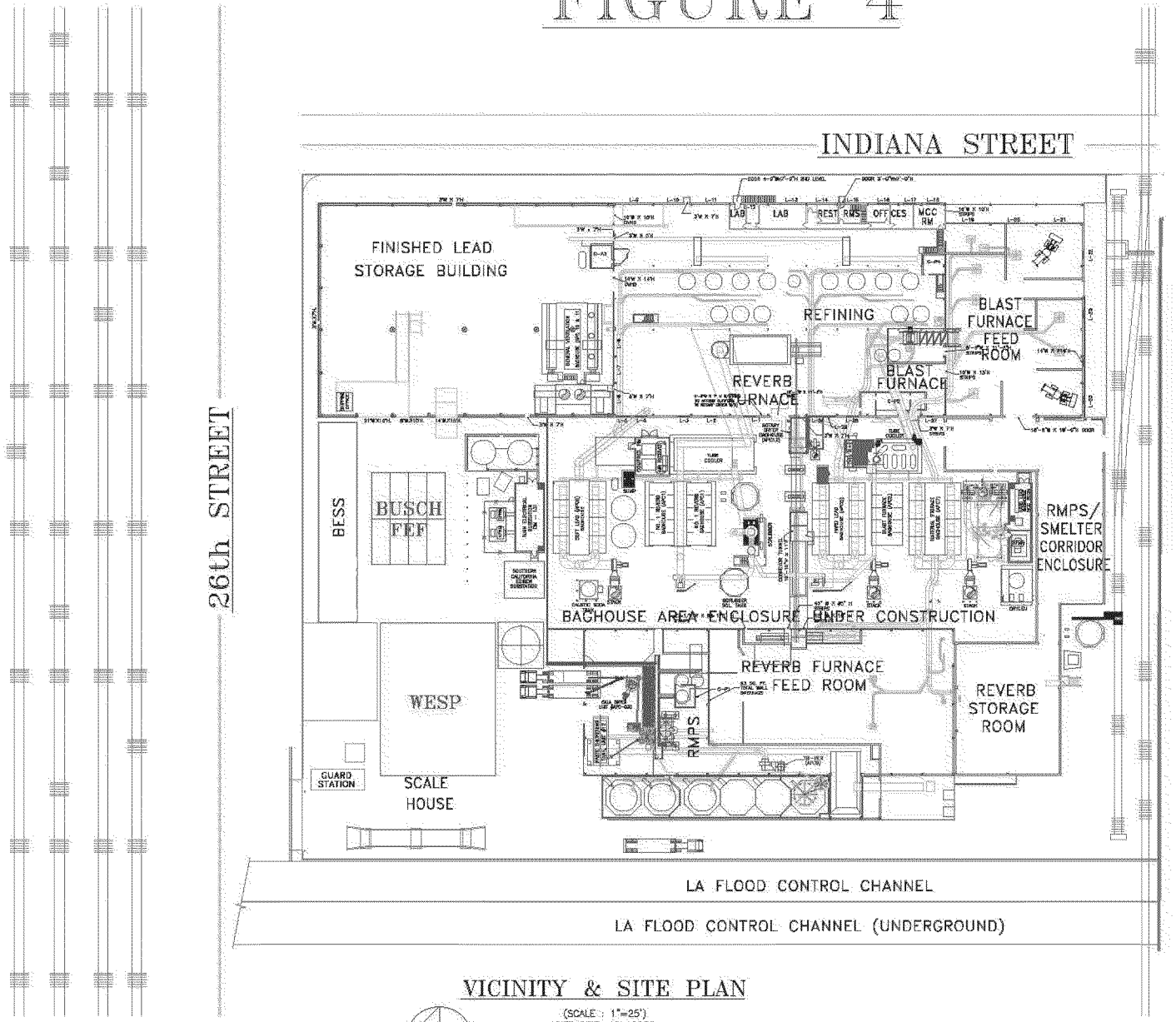

VICINITY & SITE PLAN

(SCALE : 1"=25')
SITE SIZE: 15 ACRES
TOTAL BUILDING AREA: 220,000 S.F.

N

EXIDE Technologies
Automotive Recycling Division
2700 S. Indiana St., Vernon, CA 90058

EXIDE TECHNOLOGIES, Inc. AUTOMOTIVE BATTERY DIVISION ATLANTA, GEORGIA				
TITLE: VERNON SITE PLAN				
PROJECT NUMBER	FAC. NO.	DEPT/AREA	DRAWING TYPE	SEQUENCE NUMBER
	299	35		0000 0

Appendix A

Envitech WESP Proposal for Exide Facility Located in Los Angeles, CA

June 22nd, 2011

Mr. Russel Kemp – Environ Corporation on behalf of
Exide Technologies
2700 South Indiana Street
Vernon, CA 90058

Dear Mr. Kemp:

Envitech is pleased to offer Exide Technologies this budgetary proposal for a wet electrostatic precipitator (WESP) system to control lead emissions from various "process" sources and hooding located at the Vernon facility. This budgetary proposal is based on inlet conditions provided in the attachment to your May 11th, 2011 email. Our evaluation assumes the kiln dryer will be fitted with a HEPA filter capable of reducing the lead on that source by 95% from 0.0105 lb/hr to 0.000525 lb/hr.

Envitech recommends a wet electrostatic precipitator (WESP) system to reduce lead emissions from the process sources and hooding to 0.001 lb per hour. The system would be comprised of two (2) trains of five (5) WESP's each. Each train would handle approximately 50% of the combined gas flow from these sources and would have one stack and two induced draft (ID) fans, 1 operating, and 1 spare. A packed bed absorber will be housed in the inlet section of the WESP units to distribute the gas evenly to the collection section and to neutralize any residual SO_2. This will help protect the stainless steel materials of construction.

The information contained in this proposal addresses the questions in your May 11th email. A summary of our responses to these questions are as follows:

- The expected level of emissions of lead from these sources, if controlled by a WESP, on a mass and exit concentration basis.

  Envitech Response: The expected lead emissions are as follows:

  - Mass Basis: 0.0005 to 0.0009 lb/hr
  - Concentration Basis: 2.702E-7 to 4.864E-7 gr/dscf

- The level of emissions of lead from these sources that Envitech would be willing to guarantee if a WESP were employed.

  - We would seek and need that both the expectation and guarantee for lead emissions from this system be less than 0.001 lb/hr Pb on a mass basis as a maximum, but would like to know if even lower values are possible and at what incremental effort.

PREPARED FOR
EXIDE TECHNOLOGIES
2700 South Indiana Street
Vernon, CA 90058

PREPARED ON
June 22nd, 2011

This document contains confidential and proprietary information belonging exclusively to Envitech, Inc.
Any reproduction in part or in whole without the written permission of Envitech Inc. is prohibited.

Envitech 2924 Emerson St, Ste 320, San Diego, CA 92106 | Tel 619.223.9925 | Fax 619.223.9938

Envitech Response: The performance guarantee is stated in Section 6.0, Performance Guarantee and Warranty. Envitech will guarantee 0.001 lb/hr Pb on a mass basis as a maximum. Lower values are possible, but the size and cost of the system are correlated to the design removal efficiency. We would need to know the target removal to assess the cost.

- We seek cost data on both a bare equipment and turnkey installed basis for any system or solution offered in response to the above.

  Envitech Response: The budget estimate for equipment is provided in section 2.0, Budgetary Pricing. The equipment budget is between $18M to $22M. The estimated installed cost is $25M to $30M

- We seek data in regards to water consumption, wastewater generation rates, and utility consumption for any system or solution offered.

  Envitech Response: The water and utility consumption are provided in a table in section 5.5, Operating Parameters and Utilities.

- We seek to know the physical ground footprint of any recommended system.

  Envitech Response: The foot print will be approximately 7,500 square feet including the outlet duct and stack. A preliminary general arrangement drawing (29006GA, Rev. 0, attached) is provided for reference and is based on the Quemetco layout of 5 units in a row. An alternate configuration may also be considered depending on the available space. The final footprint area will depend on the final design and arrangement.

PREPARED FOR

EXIDE TECHNOLOGIES

2700 South Indiana Street
Vernon, CA 90058

PREPARED ON
June 22nd, 2011

This document contains confidential and proprietary information belonging exclusively to Envitech, Inc.
Any reproduction in part or in whole without the written permission of Envitech Inc. is prohibited.

Envitech 2924 Emerson St, Ste 320, San Diego, CA 92106 | Tel 619.223.9925 | Fax 619.223.9938

Thank you for your interest and confidence in Envitech. If you need any additional information, please call me or visit our website at www.envitechinc.com . I look forward to hearing from you.

Sincerely,

Andrew C. Bartocci
National Sales Manger

PREPARED FOR

EXIDE TECHNOLOGIES

2700 South Indiana Street
Vernon, CA 90058

PREPARED ON
June 22nd, 2011

This document contains confidential and proprietary information belonging exclusively to Envitech, Inc.
Any reproduction in part or in whole without the written permission of Envitech Inc. is prohibited.

Envitech 2924 Emerson St, Ste 320, San Diego, CA 92106 | Tel 619.223.9925 | Fax 619.223.9938

Table of Contents

1.0 Scope of Supply 6
1.1 Equipment 6
1.2 Optional Equipment 6
1.3 Equipment and Services Provided by Others 6
2.0 Budgetary Price 7
2.1 Equipment 7
2.2 Optional Equipment 7
2.3 Equipment Startup and Training 7
3.0 Exceptions and Clarifications 7
4.0 Shipping and Payment Terms 8
4.1 Delivery Time 8
4.2 Shipping 8
4.3 Payment Schedule 8
4.4 Validity 8
5.0 System Design 9
5.1 Design Basis 9
5.2 Design Considerations 10
5.3 Principles of Operation 11
5.3.1 Wet Electrostatic Precipitator 11
5.4 System Component Specifications 13
5.4.4 Wet Electrostatic Precipitators 13
5.4.6 Induced Draft (ID) Fans 14
5.4.6 Instrumentation and Controls 15
5.4.7 Pumps 15
5.4.8 Ducting & Stack 15
5.5 Operating Parameters and Utilities 16
6.0 Performance Guarantee and Warranty 16
6.1 Performance Guarantee 16
6.2 System Warranty 16
6.3 Performance Warranty 17
7.0 Operation and Maintenance Manual 19

PREPARED FOR

EXIDE TECHNOLOGIES

2700 South Indiana Street
Vernon, CA 90058

PREPARED ON
June 22nd, 2011

This document contains confidential and proprietary information belonging exclusively to Envitech, Inc.
Any reproduction in part or in whole without the written permission of Envitech Inc. is prohibited.

Envitech 2924 Emerson St, Ste 320, San Diego, CA 92106 | Tel 619.223.9925 | Fax 619.223.9938

8.0 Training and Start-up 19
9.0 Revision History 19
Appendix A: Drawings 20
Appendix C: Brochures 21

PREPARED FOR

2700 South Indiana Street
Vernon, CA 90058

PREPARED ON
June 22nd, 2011

This document contains confidential and proprietary information belonging exclusively to Envitech, Inc.
Any reproduction in part or in whole without the written permission of Envitech Inc. is prohibited.

Envitech 2924 Emerson St, Ste 320, San Diego, CA 92106 | Tel 619.223.9925 | Fax 619.223.9938

1.0 Scope of Supply

1.1 Equipment

One (1) Envitech Syngas Cleaning System, including:

- æ Ten (10) wet electrostatic precipitators
- æ Two (2) Induced Draft Fans
- æ One (1) lot of instrumentation & control system
- æ One (1) lot of pumps
- æ One (1) lot of ducting & stack
- æ Operation and Maintenance Manuals

1.2 Optional Equipment

- æ Additional operation and maintenance Manuals.

1.3 Equipment and Services Provided by Others

- æ Installation of equipment.
- æ Inlet ductwork to the system.
- æ Piping, valves & fittings.
- æ All permits and special clearances required by Local State, or Federal agencies.
- æ Testing required by an independent third party required to establish performance.

PREPARED FOR

EXIDE TECHNOLOGIES

2700 South Indiana Street
Vernon, CA 90058

PREPARED ON
June 22nd, 2011

This document contains confidential and proprietary information belonging exclusively to Envitech, Inc.
Any reproduction in part or in whole without the written permission of Envitech Inc. is prohibited.

Envitech 2924 Emerson St, Ste 320, San Diego, CA 92106 | Tel 619.223.9925 | Fax 619.223.9938

2.0 Budgetary Price

2.1 Equipment

One (1) Envitech WESP System	US $18,000,000 to $22,000,000

The price does not include any sales, use, excise, or similar taxes.

- The estimated Installation Cost is $7,000,000 to $9,000,000.
- The estimated total installed cost is $25,000,000 to $30,000,000.

2.2 Optional Equipment

Option 1: Additional Operation and Maintenance Manuals	US $350

The price does not include any sales, use, excise, or similar taxes.

2.3 Equipment Startup and Training

Equipment start-up and operator training	US $75,000

The following support is included for the price shown above.

	Days
Startup, fine tuning	28
Operator Training	2

Additional days are charged at $1,500 per day plus travel, food, and lodging at cost plus 15%.

3.0 Exceptions and Clarifications

There are no exceptions or clarifications.

PREPARED FOR

EXIDE TECHNOLOGIES

2700 South Indiana Street
Vernon, CA 90058

PREPARED ON
June 22nd, 2011

This document contains confidential and proprietary information belonging exclusively to Envitech, Inc.
Any reproduction in part or in whole without the written permission of Envitech Inc. is prohibited.

Envitech 2924 Emerson St, Ste 320, San Diego, CA 92106 | Tel 619.223.9925 | Fax 619.223.9938

4.0 Shipping and Payment Terms

4.1 Delivery Time

Design drawings for approval:	10 to 16 weeks from receipt of order with down payment
Delivery to carrier:	20 to 24 weeks from receipt of design approval and release for fabrication

4.2 Shipping

Price is F. O. B. Point of Manufacture, including equipment only.

Freight will be added and billed at cost.

4.3 Payment Schedule

Payment will be per a payment schedule to be negotiated at the time of contract.

4.4 Validity

This quotation is budgetary only.

PREPARED FOR

EXIDE TECHNOLOGIES

2700 South Indiana Street
Vernon, CA 90058

PREPARED ON
June 22nd, 2011

This document contains confidential and proprietary information belonging exclusively to Envitech, Inc.
Any reproduction in part or in whole without the written permission of Envitech Inc. is prohibited.

Envitech 2924 Emerson St, Ste 320, San Diego, CA 92106 | Tel 619.223.9925 | Fax 619.223.9938

5.0 System Design

5.1 Design Basis

The proposed system is designed to operate at the following parameters:

Inlet Gas Condition

	Kiln	Blast & Reverb	Hard Lead	Soft Lead	Combined
Gas Flow Rate, dscfm	10,392	19,035	95,037	91,415	215,879
Gas Flow Rate, scfm	11,877	22,989	97,175	93,471	225,512
Gas Flow Rate, acfm	15,245	26,190	102,572	100,130	243,868
Gas Temp, F	216	140	95	104	110
Upstream Press., in.W.C.	-1	-1	-1	-1	-1
Gas Composition, lb/hr					
H2O	4,165	11,093	5,998	5,769	27,025
CO_2	0	0	0	0	0
O_2	10,875	19,919	99,452	95,662	224,909
CO	0	0	0	0	0
N2	35,815	65,602	327,553	315,050	743,999
SO_2	0	0	0	0	0
Total	50,854	96,614	432,983	416,481	996,933
Particulate	0.000525*	0.000175	0.00663	0.00665	0.014

*Assumes the kiln is fitted with a HEPA filter capable of reducing lead emissions 95% from 0.0105 lb/hr to 0.000525 lb/hr.

PREPARED FOR

EXIDE TECHNOLOGIES

2700 South Indiana Street
Vernon, CA 90058

PREPARED ON
June 22nd, 2011

This document contains confidential and proprietary information belonging exclusively to Envitech, Inc.
Any reproduction in part or in whole without the written permission of Envitech Inc. is prohibited.

Envitech 2924 Emerson St, Ste 320, San Diego, CA 92106 | Tel 619.223.9925 | Fax 619.223.9938

5.2 Design Considerations

None noted.

PREPARED FOR

2700 South Indiana Street
Vernon, CA 90058

PREPARED ON
June 22nd, 2011

This document contains confidential and proprietary information belonging exclusively to Envitech, Inc.
Any reproduction in part or in whole without the written permission of Envitech Inc. is prohibited.

Envitech 2924 Emerson St, Ste 320, San Diego, CA 92106 | Tel 619.223.9925 | Fax 619.223.9938

5.3 Principles of Operation

The Envitech WESP System was developed by Envitech through years of research and is highly efficient in controlling metal emissions from industrial sources. The precipitators will be arranged in two (2) trains of five (5) units each. The exhaust gas first enters and inlet header of each train which distributes the gas to each of the WESP units. The WESP operation is further described below.

5.3.1 Wet Electrostatic Precipitator

5.3.1.1 Inlet Conditioning Section

The conditioning section houses the inlet and packed bed section for distributing the air flow equally to all cells of the collector section. The packed bed section is also wetted with recirculation liquid to ensure that the gas is saturated prior to entering the collector section. Acid neutralization with caustic can be used to protect the materials of construction of the collector section.

5.3.1.2 WESP Collector Section

In this section, electrostatic forces remove particles contained in the gas stream. The collector section is an array of grounded collector tubes and discharge electrodes. Voltage in the range of 30 to 40 kV is applied to the discharge electrodes both to charge the particles and to provide a high voltage field. The voltage emanating from disks on the discharge electrodes creates a corona discharge of electrons. Electrons move from the discharge disks to the collector tube. Some of the electrons intercept and charge particles in the gas stream. Once the particles are charged, they are moved across the gas stream by the high voltage field where they deposit on the grounded collector tube. The particles are then intermittently flushed from the collector tube with a stream of water.

5.3.1.3 WESP Outlet and Electrode Housing

The outlet section contains an entrainment separator. The entrainment separator collects any water drops that were entrained in the gas stream during washing. The outlet section also houses the support structure for the discharge electrodes.

This document contains confidential and proprietary information belonging exclusively to Envitech, Inc.
Any reproduction in part or in whole without the written permission of Envitech Inc. is prohibited.

Envitech 2924 Emerson St, Ste 320, San Diego, CA 92106 | Tel 619.223.9925 | Fax 619.223.9938

5.3.1.4 WESP High Voltage Transformer/Rectifier (T/R) with Controller

The power supply package supplies high voltage, full-wave, direct current (DC) power to the WESP. This allows automatic, unattended operation and provides all functions necessary to insure personnel safety and protect the equipment from upsets.

5.1.4.5 WESP Safety Interlock

The WESP is equipped with safety lock key interlocks that are interlocked with the main power to the T/R. This ensures that the high voltage areas in the power supply, the control cabinet, and the WESP cannot be entered without first de-energizing and grounding the bushing at the T/R.

After exiting the top of the WESP, the exhaust gas passes through an outlet header, Induced Draft (ID) fan and stack. There are two (2) ID fans, 1 operating and 1 spare.

PREPARED FOR

EXIDE TECHNOLOGIES

2700 South Indiana Street
Vernon, CA 90058

PREPARED ON
June 22nd, 2011

This document contains confidential and proprietary information belonging exclusively to Envitech, Inc.
Any reproduction in part or in whole without the written permission of Envitech Inc. is prohibited.

Envitech 2924 Emerson St, Ste 320, San Diego, CA 92106 | Tel 619.223.9925 | Fax 619.223.9938

5.4 System Component Specifications

5.4.4 Wet Electrostatic Precipitators

Ten (10) high-efficiency Envitech wet electrostatic precipitators (WESP's).

Component	Description
Type	Upflow
Vessel Shells	316SS
Vessel Geometry	Square
Vessel Cross Section, ft	12 ft. x 12 ft.
Vessel Height, ft	30
Number of units	10 total (2 trains of 5 units each)
Footprint Area, Sq.ft (est.)	7,500
Inlet Conditioning Section	
Flow Distributor	316SS
Collector Section	316SS
Tube Type	Hexagon
Tube Length, in.	72
Tube Side Dimension, in	3
Tube Thickness, in	0.065
Discharge Electrodes	316SS
Type	Rigid Mast
Number of Emitter Disks per Electrode	6
Number of Discharge Crowns per Emitter Disk	25
Discharge Electrode Diameter, in.	1
Discharge Electrode Wall Thickness, in.	0.065
Power Grid Support	316SS
Insulator Support Assembly	
Quantity	4
Shell	CS
High Voltage Insulator	Porcelain
Outlet Section and Power Grid Housing	316SS
Entrainment Separator	316SS
Internal Wash Pipe	316SS
Wash Nozzle(s)	316SS
Access Doors	
Power Grid Housing	2 @ 24 in. Ø
Inlet Section	2 @ 24 in. Ø
Transformer/Rectifier	
Primary Voltage, V single phase	480
Secondary Voltage, kV	25 to 40

PREPARED FOR
EXIDE TECHNOLOGIES
2700 South Indiana Street
Vernon, CA 90058

PREPARED ON
June 22nd, 2011

This document contains confidential and proprietary information belonging exclusively to Envitech, Inc.
Any reproduction in part or in whole without the written permission of Envitech Inc. is prohibited.

Envitech 2924 Emerson St, Ste 320, San Diego, CA 92106 | Tel 619.223.9925 | Fax 619.223.9938

Component	Description
Secondary Current, mA	1,850
Insulating Fluid	Mineral oil
Voltage Divider Rating, mega ohm	80
Current Limiting Reactor	
Location	LV junction box
Reactance	30%, 40%, 50%
Ambient Temperature, C	40
Temperature Rise, C	55
Type	Full wave rectified DC; mineral oil filled
Rectifier	Silicon diode bridge
Housing	NEMA 3R
Primary Power Rating	480V @ 17 amps
Secondary Power Rating	40 kV @ 242 mA
Transformer Rectifier Controller	SQ-300*i*
Power Transmission Type	Pipe in guard
Purge Air System	
Heater	
Type	Electric resistance
Quantity	4
Power, kW each	2
Purge Gas Ducting	316SS
Filters	4
Safety Interlock System	All access points, T/R Set and controller

5.4.6 Induced Draft (ID) Fans

PREPARED FOR

EXIDE TECHNOLOGIES

2700 South Indiana Street
Vernon, CA 90058

PREPARED ON
June 22nd, 2011

The system includes a total of Two (2) ID fans 1 operating and 1 spare.

Instrument or Control	Number
Two (2) ID Fans	316SS
Two (2) VFD's	Included
Two (2) ID Fan Inlet Dampers	316SS
Two (2) ID Fan Outlet Dampers	316SS
Fan Motor HP, EA	
Connected	350
Operating	280

This document contains confidential and proprietary information belonging exclusively to Envitech, Inc.
Any reproduction in part or in whole without the written permission of Envitech Inc. is prohibited.

Envitech 2924 Emerson St, Ste 320, San Diego, CA 92106 | Tel 619.223.9925 | Fax 619.223.9938

5.4.6 Instrumentation and Controls

The WESP system is designed for semi-automatic operation and includes instrumentation and a control system. Motor starters and control room building are by others.

Instrument or Control	Number
Level Transmitter	10
Level Switches	10
pH probe & Transmitter	10
Differential Pressure Transmitter(s)	2
Thermocouples	10
Liquid Flow Transmitter(s)	20
Pressure Gauge(s)	20
Control System	Included
Motor Starters and Control Room	By Others

5.4.7 Pumps

One (1) lot of recirculation pumps. Piping, valves, and fittings are by others.

Component	Description
Ten (10) Recirculation Pumps	20 HP/316SS
Piping, Valves & Fittings	By Others

5.4.8 Ducting & Stack

One (1) lot of interconnecting ducting fabricated as shown below.

Component	Description
Inlet Duct to System Inlet	By Others
Two (2) Inlet Headers	316SS
Two (2) Outlet Headers	316SS
Ten (10) WESP Inlet Dampers	316SS
Ten (10) WESP Outlet Dampers	316SS
One (1) Stack	316SS/70 ft Ht.

PREPARED FOR

EXIDE TECHNOLOGIES

2700 South Indiana Street
Vernon, CA 90058

PREPARED ON
June 22nd, 2011

This document contains confidential and proprietary information belonging exclusively to Envitech, Inc.
Any reproduction in part or in whole without the written permission of Envitech Inc. is prohibited.

Envitech 2924 Emerson St, Ste 320, San Diego, CA 92106 | Tel 619.223.9925 | Fax 619.223.9938

5.5 Operating Parameters and Utilities

Following are the estimated operating parameters for both trains combined :

Operating Parameter/Utility	
System Inlet Pressure, in. WC	-1
Maximum Pressure Drop, in. WC	2
Fresh Water, gpm	2
Blowdown, gpm (estimated)[1]	2
Wash Water Flush, gpm[2]	1,440
Electricity, kW	
T/R Set	246
Purge Air System	80
Motor Operating HP	
Recirculation Pumps	200
ID Fans	280
Caustic Consumption, gph[1]	TBD

[1]Depends on the inlet SO_2 load which is unknown at this time.

[2]Operates for 1 min every 1 to 4 hours. The wash water will be rotated between the WESP units at 144 gpm at a time for 1 min every 1 to 4 hours per WESP unit.

6.0 Performance Guarantee and Warranty

6.1 Performance Guarantee

The proposed scrubbing system is designed to meet the following emission criteria:

Lead (Pb) Outlet	0.001 lb/hr

PREPARED FOR

EXIDE TECHNOLOGIES

2700 South Indiana Street
Vernon, CA 90058

PREPARED ON
June 22nd, 2011

6.2 System Warranty

The system is warranted for materials and workmanship one year from date of startup or 18 months after delivery, whichever comes first. The system warranty is based on operation of the system in compliance with Envitech's operating instructions, including proper preventative maintenance and the design basis described in section 5.1.

The following are specific exclusions to the warranty:

None noted

This document contains confidential and proprietary information belonging exclusively to Envitech, Inc.
Any reproduction in part or in whole without the written permission of Envitech Inc. is prohibited.

Envitech 2924 Emerson St, Ste 320, San Diego, CA 92106 | Tel 619.223.9925 | Fax 619.223.9938

In all situations involving non-conforming or defective products furnished under this warranty, Buyer's exclusive remedy is the repair or replacement of the products. Seller shall in its sole discretion have the option to elect repair or replacement of the products.

Seller shall not be liable for any indirect, special, incidental or consequential loss or damage (including, without limitation, loss of profits or loss of use) suffered by Buyer arising from or relating to Seller performance, non-performance, breach of or default under a covenant, warranty, representation, term or condition hereof.

6.3 Performance Warranty

Subject to the limitations of the General Terms and Conditions and the conditions stated herein, Envitech warrants the performance of the equipment at the performance levels specified above during a performance test to be conducted, or the warranty deemed satisfied, within ninety (90) days after start of initial operation or six (6) months after shipment, whichever occurs first, provided that the equipment, if in operation, has been installed and adjusted in accordance with Envitech engineering drawings and other written instructions. This warranty is conditional upon the Inlet Gas Conditions as specified in *Design Basis*.

Buyer shall give Envitech at least 30 days prior written notice of the date when the equipment will be ready for performance testing. If the equipment is not tested for performance within the time period specified in the above paragraph, through no fault of Envitech, or if Inlet Gas Conditions different than those specified above are encountered during performance testing, then the Envitech performance test obligation and this performance warranty will be deemed satisfied.

The System and Envitech shall be deemed to have satisfied obligations and this performance warranty when the average of three consecutive tests results in concentrations consistent with the applicable performance levels.

Prior to performance testing, Envitech may inspect the equipment at any reasonable time. If the equipment has been damaged after the transfer and passage of the risk of loss and damage from Envitech to the Buyer or mis-installed by Buyer, then Buyer shall at its expense, restore the equipment to operating condition satisfactory to Envitech prior to beginning of performance testing. If the equipment cannot be restored, Envitech will be released from its obligation.

Performance testing will be conducted by an independent testing laboratory, mutually acceptable to Buyer and Envitech. The initial battery of tests will be

This document contains confidential and proprietary information belonging exclusively to Envitech, Inc.
Any reproduction in part or in whole without the written permission of Envitech Inc. is prohibited.

conducted at Buyer's expense (including all fees and charges of the independent testing laboratory, as well as payment for the services, if requested, of an Envitech engineer at Envitech's then current daily service rate plus travel and living expenses). If the equipment performs at the applicable performance levels, as measured by the initial battery of tests, then the Envitech obligations and this performance warranty shall be deemed satisfied.

If the equipment fails to meet the applicable performance levels for reasons which are the fault or responsibility of Envitech, Buyer shall notify Envitech of the nonconformity in writing within 10 days of the knowledge of the nonconformity. Envitech, at its option, may make modifications, additions, or replacements to the equipment as it deems necessary to have the equipment function in accordance with said warranty. Envitech, at its expense, may request the independent laboratory to conduct additional tests to determine if the equipment is meeting the applicable performance levels. However, if the failure of the equipment to perform at the applicable performance levels occurs in whole or in part by reason of the fault or responsibility of third parties or of the Buyer, or its employees, agents or contractors, Buyer shall bear the expense of such additional tests.

Envitech and its engineers are to have access to all records, reports, results and other information relative to the equipment, as well as to all tests conducted by the independent testing laboratory. Immediately after completion of the tests, the Buyer shall cause the independent testing laboratory to transmit an unedited copy of the test reports and results to Envitech. At any time that this performance warranty is satisfied, or deemed satisfied, or Envitech is relieved of performance warranty obligations, any portion of the contract price not yet paid will immediately become due and payable to Envitech.

PREPARED FOR

EXIDE TECHNOLOGIES

2700 South Indiana Street
Vernon, CA 90058

PREPARED ON
June 22nd, 2011

This document contains confidential and proprietary information belonging exclusively to Envitech, Inc.
Any reproduction in part or in whole without the written permission of Envitech Inc. is prohibited.

Envitech 2924 Emerson St, Ste 320, San Diego, CA 92106 | Tel 619.223.9925 | Fax 619.223.9938

7.0 Operation and Maintenance Manual

One printed copy of the operating and maintenance manual is provided. The manual contains all the information needed to operate, maintain, and troubleshoot the incinerator gas cleaning system.

The manual also includes general arrangement drawings, process flow diagrams, P & ID diagrams, wiring diagrams (with pre-wired option), sequence of operations, manufacturers' catalog sheets for purchased components, recommended sources of replacement parts, and spare parts list.

8.0 Training and Start-up

Start-up and installation supervision is provided as outlined in the proposal. Additional training and assistance is available on a per diem basis plus travel costs.

The training covers system design, start-up and shut-down procedures, basic control functions, and trouble shooting. The training schedule can be adjusted to meet the specific needs of various groups of personnel and different plant conditions

9.0 Revision History

Revision	Date	Author	Prepared For	Description
00	06/22/11	ACB	R. Kemp	Preliminary Budget Proposal

PREPARED FOR

EXIDE TECHNOLOGIES

2700 South Indiana Street
Vernon, CA 90058

PREPARED ON
June 22nd, 2011

This document contains confidential and proprietary information belonging exclusively to Envitech, Inc.
Any reproduction in part or in whole without the written permission of Envitech Inc. is prohibited.

Envitech 2924 Emerson St, Ste 320, San Diego, CA 92106 | Tel 619.223.9925 | Fax 619.223.9938

Appendix A: Drawings

The following drawings are for reference only. Equipment, materials of construction and quantities are defined in 5.4 System Component Specifications.

æ 29006GA, Rev 0 for Reference Only

PREPARED FOR

2700 South Indiana Street
Vernon, CA 90058

PREPARED ON
June 22nd, 2011

This document contains confidential and proprietary information belonging exclusively to Envitech, Inc.
Any reproduction in part or in whole without the written permission of Envitech Inc. is prohibited.

Envitech 2924 Emerson St, Ste 320, San Diego, CA 92106 | Tel 619.223.9925 | Fax 619.223.9938

REVISIONS			
REV.	DESCRIPTION	DATE	APPROVED
A	INITIAL RELEASE	6/16/2011	R. PATTERSON

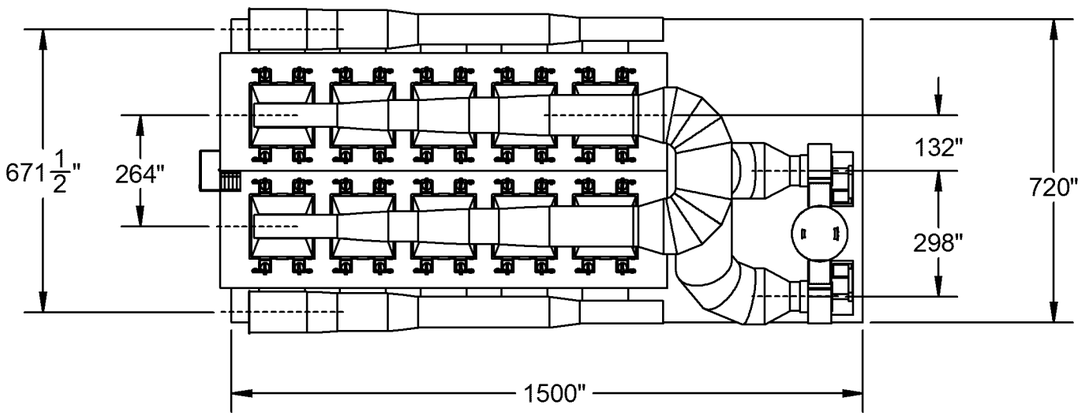

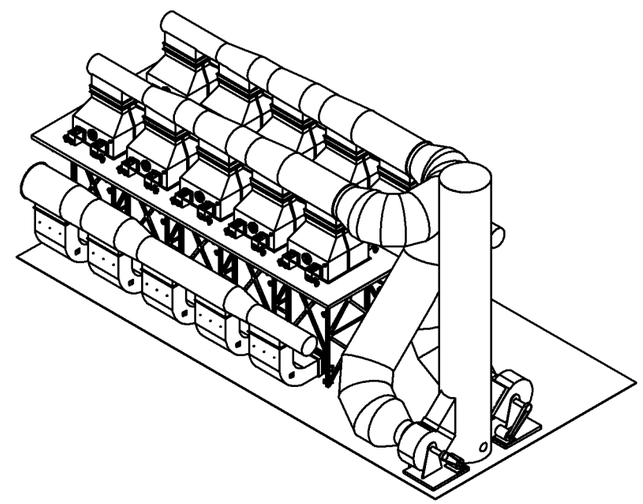

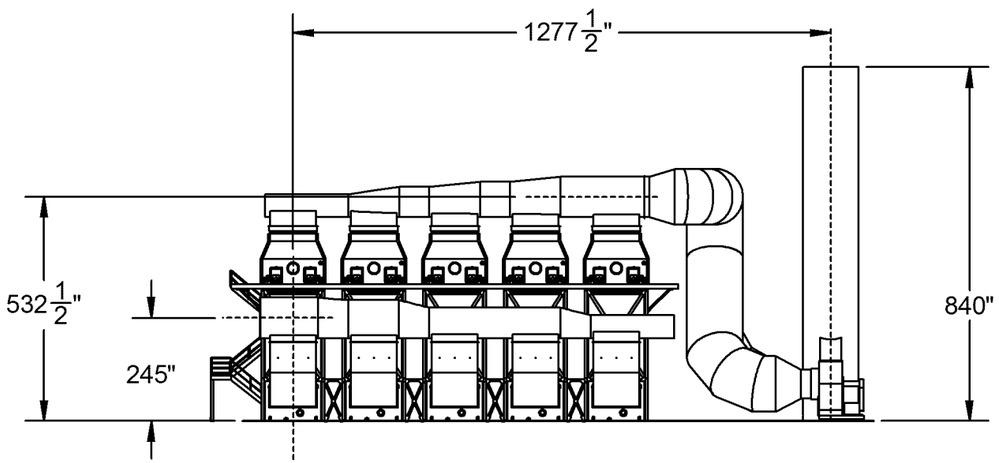

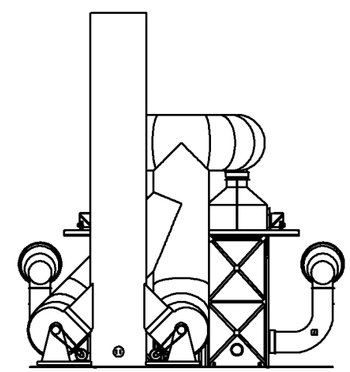

UNLESS OTHERWISE SPECIFIED:		NAME	DATE
DIMENSIONS ARE IN INCHES TOLERANCES: FRACTIONAL ± ANGULAR: MACH ± BEND ± TWO PLACE DECIMAL ± THREE PLACE DECIMAL ±	DRAWN	AJO	6/16/11
	CHECKED		
	PROJ ENG	AJO	6/16/11
	MATERIAL		
INTERPRET GEOMETRIC TOLERANCING PER:	FINISH		
PROPRIETARY AND CONFIDENTIAL THE INFORMATION CONTAINED IN THIS DRAWING IS THE SOLE PROPERTY OF ENVITECH INC. ANY REPRODUCTION IN PART OR AS A WHOLE WITHOUT THE WRITTEN PERMISSION OF ENVITECH INC. IS PROHIBITED.	PROJECT: EXIDE		

Envitech
2924 Emerson Street
San Diego, CA 92106
(619) 223-9925
(619) 223-9938 FAX

TITLE:
GENERAL ARRANGEMENT

SIZE	DWG. NO.	REV
B	29006GA	A
SCALE: 1:360	WEIGHT:	SHEET 1 OF 1

Appendix C: Brochures

- æ Industrial Gas Cleaning System Brochure
- æ Enviech WESP Cut Sheet

PREPARED FOR

EXIDE TECHNOLOGIES

2700 South Indiana Street
Vernon, CA 90058

PREPARED ON
June 22nd, 2011

This document contains confidential and proprietary information belonging exclusively to Envitech, Inc.
Any reproduction in part or in whole without the written permission of Envitech Inc. is prohibited.

Envitech 2924 Emerson St, Ste 320, San Diego, CA 92106 | Tel 619.223.9925 | Fax 619.223.9938

Appendix C: Terms and Conditions

PREPARED FOR

2700 South Indiana Street
Vernon, CA 90058

PREPARED ON
June 22nd, 2011

This document contains confidential and proprietary information belonging exclusively to Envitech, Inc.
Any reproduction in part or in whole without the written permission of Envitech Inc. is prohibited.

Envitech 2924 Emerson St, Ste 320, San Diego, CA 92106 | Tel 619.223.9925 | Fax 619.223.9938

ENVITECH

General Terms and Conditions

Acceptance

Unless otherwise provided, this Proposal is subject to acceptance by Buyer within sixty (60) days from the Proposal date. Acceptance of this Proposal is limited to the terms and conditions herein. Envitech rejects all additional or different terms proposed by Buyer, except with Envitech's prior written consent. Buyer will reimburse Envitech for all reasonable costs and all other loss and damage resulting from the amendment or termination of this Proposal.

Terms of Payment

Except as otherwise provided in the Proposal, payment shall be by check or bank transfer according to the *Payment Schedule*. If Buyer fails to make any payments in accordance with the terms and provisions hereof, Envitech, in addition, but not in limitation, to its other rights and remedies, may at its option, either terminate the Contract or suspend further deliveries under it until payments have been brought current.

Shipping

Unless otherwise provided, all shipments shall be made F.O.B. shipping point. Title and risk of damage to or loss of goods shall pass to the Buyer upon delivery by Envitech to the carrier. If the shipment of any or all of the equipment is postponed or delayed by Buyer for any reason, including a Force Majeure situation, Buyer agrees to reimburse Envitech for any and all storage costs and other additional expenses resulting there from.

Force Majeure

Envitech shall not be liable for loss or damage for delay in delivery or failure to manufacture due to causes beyond its reasonable control including, but not limited to, acts of God, the government or the public enemy, riots, embargoes, strikes or other acts or workmen, casualties or accidents delays in deliveries and transposition and shortages of cars, fuel, power, labor, or material.

Material/Workmanship Warranty

Envitech will repair or replace, in its sole discretion, any equipment which has been manufactured to Envitech's special design and sold hereunder which is found to be defective in workmanship or materials, within twelve (12) months from its respective final acceptance date or eighteen (18) months from its respective shipment date, whichever comes first. Buyer's obligations hereunder are subject to the following conditions:

a) Buyer notifies Envitech in writing within fifteen (15) days after such defect becomes apparent and promptly furnishes Envitech full particulars in connection therewith, together with an opportunity to witness the operation of such defective equipment.

b) Buyer shall have installed (if applicable), operated and maintained the equipment strictly in accordance with Envitech's operating and maintenance instructions, including, but not limited to, the use of only those materials specified in the Proposal and in the inlet quantities stated in the Proposal.

c) The defect has been caused solely by faulty materials or workmanship for which Envitech is responsible, and is not due to such things as erosion, corrosion, or deterioration resulting from the manner in which the equipment is operated, accident (including damage during shipment, neglect, misuse or abuse, or exposure to conditions beyond the environmental power or operating constrains specified by Envitech.

Envitech makes no warranty with respect to equipment and materials not furnished by Envitech pursuant to this Proposal or with respect to equipment furnished by Envitech pursuant to this Proposal which has not been manufactured to Envitech's special design, but will pass on or assign to Buyer to the extent legally permissible, the warranties, if any, obtained from manufacturers of such items of equipment.

Any repairs made under this warranty will be done on site, if feasible, or at the place of manufacture. Any round-trip freight transportation charges required for returning material deemed defective to the place of manufacture must be paid by Buyer. All costs associated with removing or reinstalling the defective equipment will be at Buyer's sole expense.

Limitation of Warranties

The warranties and guaranties furnished by Envitech, as expressly included herein, constitute Envitech's sole obligation hereunder and are in lieu of any other warranties or guaranties, express or implied, including warranties of merchantability or fitness for a particular purpose.

Taxes

Unless otherwise provided, Buyer agrees to pay any tax or import duty imposed by any federal, state, local or municipal Authority upon the equipment or related services described in this Proposal.

EPA-R9-2016-005534-0025099

Installation

Unless otherwise provided, Envitech shall have no responsibility for, and Buyer hereby waives and relinquishes any claims related to, the installation, start-up and operation of the equipment to be furnished hereunder. If this agreement so provides, Envitech shall furnish advisory personnel to assist in installation and start-up of the equipment and to instruct Buyer's personnel in the operation of Envitech's equipment. Although Envitech will be responsible for mechanical adjustments to its equipment, Envitech has no responsibility for, and Buyer hereby waives and relinquishes any claims related to, correctness of site installation, the appropriateness and compatibility of the installation with respect to Buyer's facility or ability of Buyer's personnel to correctly operate and maintain Envitech's equipment.

Buyer agrees to defend, indemnify and hold harmless Envitech from and against any loss, costs (including reasonable attorneys' fees and costs), claims, suits or causes of action brought, threatened or incurred by or against Envitech arising from or in any way related to the installation, start-up and operation of the equipment to be furnished hereunder.

Inventions and Patents

Envitech grants no license by reason of any sale under any patent rights it may now own or hereafter acquire except the right to use the equipment sold hereby for the purpose for which it is sold under such patent rights, only as it covers said equipment as sold by Envitech. All drawings, novel techniques, special tooling and inventions made or acquired by Envitech or its agents or employees in the fulfillment of this proposal shall be the property of Envitech regardless of whether any order document states a separate price item for tooling or engineering. Buyer agrees to indemnify and hold Envitech harmless from and against any expense or loss from infringement of patents or trademarks arising from compliance with the Buyer's designs, specifications or instructions in the manufacture of the equipment or its use in combination with other equipment or systems.

Limitation of Remedies

Envitech's entire liability and Buyer's exclusive remedy are set forth in this Section:

In all situations involving non-conforming or defective Products furnished under this Agreement, Buyer's exclusive remedy is the repair or replacement of the Products. Envitech shall in its sole discretion have the option to elect repair or replacement of the Products.

Envitech's liability for actual damages for any cause whatsoever shall be limited to the applicable unit price for the specific components of the Product that caused the damages or that are the subject matter of, or are directly related to, the cause of action. This limitation will apply, except as otherwise stated in this Section, regardless of the form of action, whether in contract or in tort, including negligence.

Envitech shall not be liable for any indirect, special, incidental or consequential loss or damage (including, without limitation, loss of profits or loss of use) suffered by Buyer arising from or relating to Envitech's performance, non-performance, breach of or default under a covenant, warranty, representation, term or condition hereof. Except as specifically provided in the preceding sentence, Buyer waives and relinquishes claims for indirect, special, incidental or consequential damages.

Buyer expressly waives any right to recover punitive damages from Envitech, and Buyer hereby waives and relinquishes any and all punitive damage claims.

The limitations on liability and damages set forth in this section apply to all causes of action that may be asserted here under, whether sounding in breach of contract, breach of warranty, tort, product liability, negligence or otherwise.

Security

Envitech reserves a security interest in the equipment sold hereunder and in all accessions to, replacements for and proceeds of such equipment, until the full contract price, plus all other charges permitted hereunder, including any charges, costs or fees contemplated in the *Attorney's Fees, Venue and Jurisdiction* section below, are paid in full by Buyer. If so requested by Envitech, Buyer shall execute all security agreements, financing statements, promissory notes and all other security documents requested by Envitech in the form determined by Envitech.

Dispute Resolution

The Parties agree that any controversy, dispute or claim arising from or in any way related to this Agreement or the materials or equipment provided by Envitech shall be resolved by binding arbitration. The parties agree that jurisdiction for any arbitration shall be with the San Diego, California office of the Judicial Arbitration and Mediation Service ("JAMS") and the Parties hereby expressly agree to be bound by the then-prevailing JAMS rules applicable to commercial arbitrations.

Any dispute subject to arbitration shall be submitted to a single neutral arbitrator, who, unless otherwise agreed by the Parties, shall be a retired judge or other lawyer who is a member of the arbitration panel of the San Diego office of JAMS and who has substantial experience in the area of the Dispute. JAMS shall submit to each Party an identical list of five proposed qualified arbitrators drawn from the applicable panel of commercial arbitrators. If the Parties are unable to agree upon an arbitrator within thirty (30) days from the date that JAMS submits such list to each Party, then JAMS shall simultaneously submit to each Party a second list of five additional proposed qualified arbitrators drawn from the applicable panel of commercial arbitrators. If for any reason, the appointment of an arbitrator cannot be made from either list, JAMS may make the appointment from among other qualified members of the panel without the submission of additional lists to the Parties

The Parties shall be entitled to obtain pre-hearing discovery through depositions and requests for the inspection and copying of documents and other items upon reasonable notice and to obtain the issuance of a

subpoena duces tecum therefor in accordance with applicable law, provided that depositions shall not be taken unless leave to do so is first granted by the arbitrator. As between the Parties, the arbitrator shall have the power to enforce the rights, remedies, procedures, duties, liabilities and obligations of discovery by the imposition of the same terms, conditions, consequences, sanctions and penalties as may be imposed in like circumstances in a civil action by a California Superior Court.

Any award rendered by the arbitrator shall be reduced to a judgment and may be entered in any Court authorized to have jurisdiction under this Agreement.

The parties expressly waive any right they may have to a jury trial.

Venue and Jurisdiction

Each Party irrevocably consents to the jurisdiction of the state courts located in San Diego, California, and agrees, subject to the provisions contained in the paragraph entitled "Dispute Resolution" above, that any action, suit or proceeding by or among the Parties (or any of them) may be brought in any such court sitting in San Diego, California, and waives any objection which the Party may now or hereafter have concerning jurisdiction and venue, whether based on considerations of personal jurisdiction, forum non conveniens or on any other ground.

Attorney's Fees

In the event of any litigation, arbitration, judicial reference or other proceeding involving the Parties to this Agreement to enforce any provision of this Agreement, to enforce any remedy available upon default under this Agreement, or seeking a declaration of the rights of a Party under this Agreement, the prevailing Party(ies) shall be entitled to recover from the other(s) such attorneys' fees and costs as may be reasonably incurred, including the cost of reasonable investigation, preparation and professional or expert consultation incurred by reason of such litigation, arbitration, judicial reference or other proceeding.

Sound Levels

The combined sound or noise levels produced by individual sound generating devices, and the exposure of workmen to such, will depends on Buyer's plant noise levels over which Envitech has no control. Therefore, Envitech makes no guarantees, warranties or representations with respect to sound levels. If, after the equipment to be furnished hereunder is installed, it is determined that the system does not meet the maximum permissible sound levels or exposures, or that changes in OSHA requirements necessitate equipment modifications or additions, Envitech shall assist Buyer in designing and providing equipment and materials required, provided that an equitable adjustment of the contract price and proposed schedule is made.

Design Criteria

Envitech's Proposal is based upon design criteria supplied by Buyer and Envitech assumes no responsibility for the accuracy of such criteria. Buyer recognizes, and the parties hereto intend, that Envitech shall not be obligated to meet its performance guarantee hereunder if the actual design conditions are found to be different from those upon which Envitech's Proposal is based.

Additions or Changes in the Work

Buyer agrees to pay Envitech reasonable charges for additional work outside the scope of any contract resulting from Envitech's Proposal as requested by Buyer by changes indicated by Buyer on Envitech's drawings, by letter, or by change order or other written instruction, and an equitable adjustment of the contract price and proposed schedule will be made by the parties.

Termination or Cancellation

In the event that Buyer terminates or cancels all or any portion of its order, Buyer shall compensate Envitech for all costs and expenses already incurred including, but not limited to, the price of any goods or services required to fill said order already committed to by Envitech, a pro rata portion of the contract price representing work completed prior to such termination or cancellation and a reasonable allowance for overhead and profit.

Miscellaneous

This Proposal represents the entire understanding and agreement between the parties hereto with respect to the subject matter hereof and supersedes all prior negotiations, letters and understandings relating to the subject matter hereof and cannot be amended, supplemented or modified except in writing signed by the party against whom the enforcement of any such amendment, supplement or modification is sought.

Failure of Envitech at any time or times to require performance of any provision of this proposal shall in no manner affect its right to enforce the same, and a waiver by Envitech of any breach of any provision of this proposal shall not be construed to be a waiver by Envitech of any succeeding breach of such provision or a waiver by Envitech of any breach of any other provision.

The rights, privileges, duties and obligations covered herein, including the transactions and agreements covered and contemplated hereby, shall be binding upon and inure to the benefit of the parties hereto and their respective successors and assigns provided, however, Buyer may not assign any of its rights, privileges, duties or obligations hereunder without the prior written consent of Envitech, and any purported or attempted assignment without such written consent shall be null and void *ab initio.*

Appendix B

BUSCH FEF Statement

BUSCH INTERNATIONAL

10431 Perry Highway, Wexford, PA 15090 Ph: 724-940-2326 Fax 724-940-4140

July 7, 2011

ENVIRON International Corporation
1600 Parkwood Circle, Suite 310
Atlanta, GA 30339

ATTN: Russell Kemp, Principal

Dear Russell:

Subject: Busch International Fugitive Emissions Filtration (FEF) Units

This revised letter summarizes several points from our recent conversations.

The Busch FEF Unit is a highly efficient and cost effective way to control fugitive lead dust emissions within lead processing facilities. These units offer the following features and benefits:

- Compact horizontal configuration for roof mounting, inline mounting or tight indoor locations.
- Self cleaning reverse jet pulse high efficiency f ilter system followed by a HEPA polishing filter stage.
- Easy to service walk-in configuration.
- Cost effective packaged design incorporates the fan, motor, controls and filtration system in one economical package.
- Proven performance on many lead industry and other metallurgical fume applications.

During our discussions, Environ presented outlet emission test data , which is reported to have come from other Busch FEF unit installations within the lead industry. These field tests from 1997-1998 show lead par ticulate outlet emission concentrations of less than 0.00 01 Grains/DSCF. In some cases, outlet concentrations are as low as 0.0000 003 Grains/DSCF. These levels are all below emission limits that could be "guaranteed".

Busch International believes that past performance is a good indication of expected future results. This will be true especially for like applications. Note however, that installations of this type are highly variable in nature and the prediction of filter system dust removal efficiency and/or outlet emission concentration is theoretical at these very low levels. The inlet dust loading and particle size distribution associated with each installation will likely vary. For these reasons, Busch expects to see similar outlet emission levels on similar applications in the future, but we cannot guarantee outlet emissions at these low levels

We look forward to the opportunity to work with you further. Please contact Lois McElwee or me if you have any questions.

Sincerely,

William W. Frank
President

C: Lois McElwee –Regional Manager

F:\DATA\PROP RELATED\V-PROP\V-67XX\V-6750 Environ Corp - FEF\Proposal\Revised FEF emission stm.doc

Appendix C

US EPA Draft Cost Impacts for the Secondary Lead Smelting Source Category and Data Table

MEMORANDUM

To: Chuck French, U.S. Environmental Protection Agency, OAQPS

From: Donna Lazzari and Mike Burr, ERG

Date: April 2011

Subject: Draft Cost Impacts for the Secondary Lead Smelting Source Category

---

The purpose of this memorandum is to describe the methodology used to estimate the costs, emissions reductions, and secondary impacts of the proposed revisions to the National Emissions Standards for Hazardous Air Pollutants (NESHAP) for the Secondary Lead Smelting source category. These impacts were calculated for existing units and new units projected to be operational by the year 2014, two years after the rule is expected to be promulgated and the anticipated year of implementation of the revised NESHAP. The results of the impacts analyses are presented for the most stringent regulatory options considered in addition to the regulatory options that were ultimately chosen for proposal. The development of the baseline emissions estimates and the maximum achievable control technology (MACT) floors for this source category are discussed in other memoranda[1,2]. The organization of this document is as follows:

1.0 Summary of Cost Estimates and Emissions Reductions for the Regulatory Options Chosen for Proposal

2.0 Regulatory Options Considered for Proposal

3.0 Methodology for Estimating Control Costs

4.0 Methodology for Estimating Emissions Reductions

5.0 Testing and Monitoring Cost Impacts

6.0 Summary of Cost by Facility

1.0 SUMMARY OF COST ESTIMATES AND EMISSIONS REDUCTIONS FOR THE REGULATORY OPTIONS CHOSEN FOR PROPOSAL

Regulatory options were considered for control of emissions of metal hazardous air pollutants (HAP), organic HAP, and dioxins and furans (D/F) from stacks and metal HAP from fugitive sources. For all options, total hydrocarbons (THC) are considered a surrogate for organic HAP (other than dioxins and furans) and lead a surrogate for metal HAP. A brief

---

[1] ERG. Development of the RTR Emissions Dataset for the Secondary Lead Smelting Source Category, Mar. 2011.
[2] ERG. MACT Floor Analysis for the Secondary Lead Smelting Source Category, Mar. 2011.

EPA-R9-2016-005534-0025106

description of the options selected for the proposed revisions to the NESHAP and the associated costs and emissions reductions are summarized in Table 1-1. The most stringent options considered in this analysis are summarized in Table 1-2. A more detailed description of all the regulatory options considered for proposal and their associated cost and emissions reductions estimates are presented in section 2.0 of this memorandum.

Table 1-1: Summary of the Estimated Costs and Emissions Reductions of Regulatory Options Selected for Proposal

Option	Description	COST IN $ MILLIONS (2009 DOLLARS)				Total HAP Emissions Reductions (tons per year)	Cost per ton HAP reduction ($MM)
		Capital Cost	Annualized Capital Cost	Annual Operation and Maintenance Cost	Total Annualized Cost		
3S	Stack lead concentration limit of 1.0 mg/dscm any stack, and 0.2 mg/dscm facility average	$7.7	$0.7	$0.9	$1.7	5.9	$0.29
1D	D/F Concentration based limit	$0	$0	$0.26	$0.26	30*	$0.009
3F	Fugitive enclosure + work practice	$40	$3.8	$5.8	$9.6	9.5	$1.0
Test, Monitor, Report	Additional Testing, Monitoring	$0.33	$0.03	$1.0	$1.0		
Total		$48.0	$4.5	$8.0	$12.6	45.4	$0.28

*Tons of total organic HAP (3 grams/yr D/F reduction)

Table 1-2: Summary of the Estimated Costs and Reductions for the Most Stringent Options

Option	Description	COST IN $ MILLIONS (2009 DOLLARS)				Total HAP Emissions Reductions (tons per year)	Cost per ton HAP reduction ($MM)
		Capital Cost	Annualized Capital Cost	Annual Operation and Maintenance Cost	Total Annualized Cost		
2S	0.009 lb/ton Pb emissions limit	$23.9	$2.3	$2.7	$5.0	9.6	$0.52
2D	Beyond the floor D/F limits for	$5.9	$0.56	$2.4	$2.9	200*	$0.015

Option	Description	COST IN $ MILLIONS (2009 DOLLARS)				Total HAP Emissions Reductions (tons per year)	Cost per ton HAP reduction ($MM)
		Capital Cost	Annualized Capital Cost	Annual Operation and Maintenance Cost	Total Annualized Cost		
	blast furnaces						
1F and 2F	Enclosures, work practices, monitoring	$40	$3.8	$6.1	$9.9	9.5	$ 1.04
Test, monitor, report	Additional testing and monitoring	$0.33	$0.03	$1.0	$1.0		
Total		$70.1	$6.7	$14.4	$18.8	219	0.086

*We estimate a total of 200 tons of reductions in organic HAP emissions, including 31 grams of dioxins and furans, under this beyond-the-floor option.

2.0 REGULATORY OPTIONS CONSIDERED FOR PROPOSAL

This section provides a detailed description of all regulatory options that were considered for the proposed revisions to the Secondary Lead Smelting NESHAP and their associated costs and secondary impacts.

2.1 Stack Emissions – Metal HAP

The four regulatory options considered for control of metal HAP emissions from stacks are presented in the following sections.

a. Option 1S

Regulatory option 1S represents a scenario of reducing the existing lead emissions concentration limit from the 2.0 milligrams per dry standard cubic meter (mg/dscm) to 0.5 mg/dscm. Based on emissions data received in an information collection request (ICR) sent to the industry, 90 percent of the stacks in this source category reported concentrations below 0.5 mg/dscm. Ten emissions points at six facilities reported concentrations above 0.5 mg/dscm; estimates of cost and emissions reductions were made for 8 of these stacks. One facility is currently undergoing an upgrade with plans to replace existing baghouses, and thus, we assumed this would reduce the lead concentration at this stack below 0.5 mg/dscm. For seven of the stacks reporting concentrations above 0.5 mg/dscm, we assumed that a replacement baghouse would be installed. For one stack at which a baghouse was recently installed, we assumed that lead concentrations below 0.5 mg/dscm could be achieved through replacement bags performance of additional maintenance on the unit. One additional stack reported concentrations that were very close to 0.5 mg/dscm; no costs for were estimated for this unit. The total estimated capital cost for the seven new baghouses that would likely be necessary to achieve

concentrations below 0.5 mg/dscm is $11.8 million, resulting in an annualized capital cost of $1.1 million. Additional annual operational and maintenance costs, including more frequent bag changes for the baghouses, are estimated at $1.6 million above the costs of operating the current air pollution control devices. The total estimated annualized cost above current cost for the 8 baghouses is $2.7 million (2009 dollars). The estimated emissions reductions of Option 1S are 6.5 tons per year of lead and 8.3 tons per year of total metal HAP.

b. Option 2S

Option 2S considers a production-based lead emissions limit. A limit of 0.009 pounds of lead emissions per ton of lead production (lbs/ton Pb) was calculated as a facility-wide emissions limit using a methodology similar to a MACT floor analysis. We estimate that new or improved baghouses would likely be necessary at 19 emissions points at six facilities to meet the limit considered in this option. For facilities that were estimated to be above the limit considered in this option, we sequentially selected stacks for a baghouse replacement or upgrade (based on reported concentration) until the facility was estimated to have emissions below 0.009 lbs/ton Pb. Two of the stacks selected had relatively newer baghouses, and thus, we estimated the cost of changing all the existing bags to a new upgraded filter media and performing additional maintenance for these units. One selected stack had a baghouse that was less than 10 years old; we estimated 25 percent of the cost of a new unit to represent additional filtration media or substantial upgrade to this unit. For the remainder of the selected stacks, assumed replacement baghouses would be needed.

The total estimated capital cost for this regulatory option is $23.9 million, resulting in an annualized capital cost of $2.3 million. Additional annual operational and maintenance costs, including more frequent bag changes for the baghouses, are estimated at $2.7 million above current costs. The total annualized cost above current air pollution control device operating costs for the 19 baghouses is $5.0 million (2009 dollars). Total anticipated emissions reductions of lead and other metal HAP in this option are estimated at 9.6 tons per year.

c. Option 3S

Option 3S is the regulatory option that was selected by EPA for proposal in the Secondary Lead Smelting NESHAP. This option represents an overall facility-wide flow-weighted average lead concentration limit of 0.2 mg/dscm and a limit of 1.0 mg/dscm for any individual stack. We estimate that this option would require reductions in lead emissions at three emissions points located at two facilities. We assumed that replacement baghouses would be needed at each of these emissions points. The total estimated capital cost for the new baghouses is $7.7 million, resulting in an annualized capital cost of $0.7 million. Additional annual operational and maintenance costs, including more frequent bag changes for the baghouses, are

estimated at $0.9 million above the currently operated air pollution control device operating costs. The total annualized cost above current cost for the three baghouses is $1.7 million (2009 dollars). Lead emissions reductions for this option are estimated at 4.7 tons per year with total metal HAP emissions reductions of 5.9 tons per year.

d. Option 4S

Option 4S is a regulatory option that considers requiring installation of a wet electrostatic precipitator (WESP) at each facility to control stack emissions of metal HAP. One facility in this source category currently utilizes a WESP to control metal HAP emissions from stacks (i.e., Quemetco, Inc. in City of Industry, CA). Based on emissions data received in the ICR, this facility is the lowest emitting facility in terms of stack emissions of metal HAP. In this option, the other 13 facilities in the source category would be required to install a WESP. Based on the configuration of the existing WESP reported in the ICR, we assumed that facilities that would need to install a WESP under this option would use the WESP to control metal HAP emissions from process and process fugitive emissions sources only. More specifically, we assumed that existing hygiene baghouses would not be routed to the WESP. The total estimated capital cost for installation of a WESP at 13 facilities is $400 million, resulting in an annualized capital cost of $36 million. The total annualized cost above current cost is estimated at $55 million. Lead emissions reductions for this option are estimated at 10.9 tons per year with total estimated metal HAP emissions reductions of 13.8 tons per year.

e. Summary

A summary of the costs and emissions reductions associated with the four regulatory options described above for stack emissions are summarized in Table 2-1.

Table 2-1: Estimated Costs and Emissions Reductions for the Regulatory Options Considered for Stack Emissions of Metal HAP.

Option	Description	COST IN $ MILLIONS (2009 DOLLARS)				Total HAP Emissions Reductions (tons per year)	Cost per ton HAP reduction ($MM)
		Capital Cost	Annualized Capital Cost	Annual Operation and Maintenance Cost	Total Annualized Cost		
1S	Concentration limit of 0.5 mg/dscm	$11.8	$1.1	$1.6	$2.7	8.3	$0.33
2S	0.009 lb Pb / Ton Pb produced	$23.9	$2.3	$2.7	$5.0	9.6	$0.52
3S	Concentration limit of 1.0 mg/dscm any stack, and 0.2	$7.7	$0.7	$0.9	$1.7	5.9	$0.29

Option	Description	COST IN $ MILLIONS (2009 DOLLARS)				Total HAP Emissions Reductions (tons per year)	Cost per ton HAP reduction ($MM)
		Capital Cost	Annualized Capital Cost	Annual Operation and Maintenance Cost	Total Annualized Cost		
	mg/dscm facility average						
4S	WESP	$400	$36	$19	$55	13.8	$4.0

2.2 Stack Emissions – Organic HAP and D/F

The two regulatory options considered for control of stack emissions of organic HAP and D/F are presented in the following sections.

a. *Option 1D*

Option 1D is the regulatory option that EPA chose for proposal in the revised NESHAP for the Secondary Lead Smelting source category. This option represents calculating a MACT floor for D/F emissions from various furnace groupings that were formed based on similar operating characteristics. In addition to the D/F MACT floors, new MACT floors for THC were be calculated for furnace types that are not regulated in the existing NESHAP. These include reverberatory furnaces not collocated with blast furnaces, electric arc furnaces, and rotary furnaces. The THC MACT limits for blast furnaces and collocated blast and reverberatory furnaces in the existing NESHAP would remain unchanged under the proposed revisions. We do not anticipate that this regulatory option will require installation of additional controls at any facilities. We do anticipate, however, that four facilities operating blast furnaces will likely increase the temperature of their afterburners to ensure continuous compliance with the new MACT floors for D/F and THC. The cost of the natural gas required to raise the temperature 100 degrees Fahrenheit (°F) at afterburners was estimated at $260,000 per year (2009 dollars). Under this regulatory option, we estimate D/F emissions reductions of about 2.9 grams per year and organic HAP emissions reductions of about 30 tons per year.

b. Option 2D

Option 2D represents a beyond-the-floor option for D/F emissions from blast furnaces that are not collocated with reverberatory furnaces. This option was considered because based on emissions data submitted in the ICR, blast furnaces that are not collocated with reverberatory furnaces contribute approximately 78 percent of the total D/F emissions from the source category. In this option, a Toxic Equivalency Quotient (TEQ) based concentration limit of 17 nanograms per dry standard cubic meter (ng/dscm) (corrected to 7 percent oxygen (O_2)) was

considered. This concentration represents an approximate 90 percent reduction in total D/F emissions from blast furnaces in this source category.

For this option, we assumed that additional afterburner capacity would be needed at five of the six blast furnaces needing D/F emissions reductions. One of the blast furnaces has an afterburner currently installed that meets the requirements of this considered regulatory option. The total estimated capital cost for installation of the additional afterburners is $5.9 million, which results in an estimated annualized capital cost of $0.56 million. Annual operational and maintenance costs increases, including additional natural gas fuel, are estimated at $2.4 million above current control device operating costs. The total annualized cost above current cost for the afterburners is estimated to be $2.9 million (2009 dollars). Under this scenario, we anticipate D/F emissions reductions of 31 grams per year, with a co-reduction of 200 tons per year of all other organic HAP. We also estimate that this option would result in a significant increase in fuel use along with increased emissions of carbon dioxide (CO_2) and oxides of nitrogen (NO_x) associated with operation of the additional afterburners.

c. Summary

A summary of the costs and emissions reductions associated with the two regulatory described above for D/F and organic HAP emissions are summarized in Table 1-4.

Table 2-2: Cost Estimates and Emissions Reductions for Regulatory Options Considered for Stack Emissions of D/F and Organic HAP.

Option	Description	COST IN $ MILLIONS (2009 DOLLARS)				Total HAP Emissions Reductions (tons per year)	Cost per ton HAP reduction ($MM)
		Capital Cost	Annualized Capital Cost	Annual Operation and Maintenance Cost	Total Annualized Cost		
1D	Concentration based MACT limit	$0	$0	$0.26	$0.26	30*	$0.009
2D	Beyond the floor for Blast furnaces	$5.9	$0.56	$2.4	$2.9	200*	$0.015

* based on total organic HAP

2.3 Fugitive Emissions – Metal HAP

Three regulatory options were considered for control of fugitive metal HAP emissions. Because these emissions cannot be directly measured, a numerical emissions limit was not calculated. Instead, regulatory options were considered that prescribed specific controls or lead

compliance monitoring at the property boundary as a means of demonstrating compliance. The three options considered are as follows:

1. **Option 1F**: This option requires facilities to conduct ambient lead monitoring at or near the property boundary to demonstrate compliance with the National Ambient Air Quality Standard (NAAQS) for lead.
2. **Option 2F**: This option requires facilities to keep all lead-bearing materials and processes enclosed in permanent total enclosures that are vented to a control device. Additional fugitive control work practices would also be required. Compliance with this regulatory option would be demonstrated by ensuring full enclosure plus work practices and ambient lead monitoring at or near the property boundary.
3. **Option 3F**: This is the primary regulatory option selected by EPA for proposal in the revised NESHAP for the Secondary Lead Smelting source category. This option is identical to option 2F with the exception that ambient lead monitoring at or near the boundaries of the facilities would not be required. Instead, compliance would be demonstrated through construction of total enclosures and operation according to a standard operating procedures (SOP) manual detailing how the required fugitive control work practices will be implemented.

In options 2F and 3F, facilities would be required to have all lead manufacturing processes within total enclosures under negative pressure with conveyance to a control device. Although option 1F requires only monitoring at the property boundary, and does not explicitly require total enclosures, we assumed for cost purposes that facilities would need to operate all lead-bearing processes under negative pressure enclosures in order to comply with this option. This estimate is considered to be a high end conservative estimate of costs, particularly for facilities where operations are not close to the property boundary. Based on information submitted in the ICR, the facilities that are currently achieving ambient lead concentrations at or near the lead NAAQS at or near their property's boundaries are facilities that already have their processes totally enclosed. Therefore, we assumed facilities that do not have all of their lead manufacturing processes in total enclosures will construct the appropriate enclosures and reconfigure their facilities to reduce their overall footprint as described in section 3.3 of this memorandum.

The total estimated capital cost for the total enclosures, ventilation systems, and associated control devices is $40 million, which results in an annualized capital cost of $3.8 million. The total annual operation and maintenance cost, which includes building and baghouse maintenance, is estimated at $2.8 million above current cost. The total annualized cost of new enclosures for six facilities is $6.6 million. Costs associated with the additional work practices are estimated at $300,000 per facility for 10 facilities at a total cost of $3 million. The total estimated annualized cost of reducing fugitive emissions for the primary regulatory option selected by EPA for proposal (Option 3F) is $9.6 million (2009 dollars). For option 1F and 2F, the cost of operating two compliance monitors at or near the property boundary of each facility is

estimated at $23,000 per facility for a total additional annualized cost of $322,000. We estimate reductions in fugitive emissions of 8.7 tons per year of lead and 9.5 tons per year of metal HAP.

The estimated costs and emissions reductions associated with the regulatory options considered for fugitive emissions of metal HAP are summarized in Table 1-5.

Table 2-3: The Estimated Costs and Metal HAP Reductions for Fugitive Sources

Option	Description	COST IN $ MILLIONS (2009 DOLLARS)				Total HAP Emissions Reductions (tons per year)	Cost per ton HAP reduction ($MM)
		Capital Cost	Annualized Capital Cost	Annual Operation and Maintenance Cost	Total Annualized Cost		
1F and 2F	Enclosure, work practice, monitoring	$40	$3.8	$6.1	$9.9	9.5	$1.04
3 F	Enclosure, work practice	$40	$3.8	$5.8	$9.6	9.5	$1.0

3.0 METHODOLOGY FOR ESTIMATING CONTROL COSTS

The following sections present the methodologies used to estimate the costs associated with the regulatory options considered for proposal in the revised NESHAP for the Secondary Lead Smelting source category.

3.1 Stack Emissions – Metal HAP

The primary technologies used to control stack emissions of metal HAP in the Secondary Lead Smelting source category are filtration devices such as baghouses or cartridge collectors, some of which have high performance particulate air (HEPA) filters as a secondary filtration device. One facility uses a wet electrostatic precipitator (WESP) downstream of a baghouse as a polishing step to further reduce metal HAP emissions. Data collected in the ICR indicate that baghouses that are properly designed, installed, maintained and operated can meet all of the metal HAP stack emissions limits considered in this analysis except those under option 4S (which included a WESP).

In order to estimate the capital cost associated with a particular option, we first determined which stacks would be required to reduce emissions. For the concentration-based limits, we assumed that the baghouses at any stacks reporting concentrations in the ICR above the considered emissions limit would need to be repaired, improved, or replaced. If the reported concentration was more than 10 percent over the considered limit, we assumed the baghouse would need to be replaced. If the reported concentration was within 10 percent of the considered limit or the unit in question was relatively new (installed after the year 2000), we assumed that

EPA-R9-2016-005534-0025114

replacement bags or additional baghouse maintenance could sufficiently reduce the concentration. For options that included a flow-weighted average concentration limit or a production based emissions limit, control devices were chosen for replacement or upgrade one at a time, beginning with the highest reported lead concentration, until the facility's emissions were below the considered limit.

In the ICR, EPA requested information on costs of emissions control devices that have been installed in the last five years. Several facilities submitted cost information that was used as a basis for estimating the cost associated with installation of a new baghouse. We compared estimates submitted by all of the facilities and chose the highest of the estimates as the cost model for baghouse installations. We compared estimates using this methodology to estimates derived using techniques described in the sixth edition of the EPA Air Pollution Control Cost Manual (http://www.epa.gov/oaqps001/lead/pdfs/2002_01_cost_control_%20manual.pdf). While the estimates derived using the EPA's manual were higher, we believe using data submitted directly by the industry is likely more representative of actual costs incurred by this source category.

Our cost model included installation of the baghouse and any necessary fans, ductwork, screw conveyors, and site work for each scenario, as appropriate. All costs are based on 2009 dollars. We did not consider the associated downtime for the unit in our costs. We estimated capital costs on the basis of dollars per unit of air flow (i.e., cubic foot per minute) into the device and assumed linearity of cost within the range of air flows considered in our analysis. The total installed capital cost of a typical baghouse designed for a flow-rate of 80,000 actual cubic feet per minute (acfm) was estimated at $1.4 million. This cost assumes a 20 year life expectancy for the unit and, to be consistent with OMB Guidance in Circular A-4, a seven percent cost of capital as an estimate of the annualized capital cost. The design flow-rate for a baghouse was assumed to be 20 percent higher than the flow-rate measured during a compliance test.

The major operating cost of a baghouse is associated with routine replacements of the filter media (bags). The number of compartments in the baghouse and the number of bags per compartment were estimated using either data submitted in the ICR for the particular unit or data submitted for a similar sized unit if the former data were not available. The estimated number of bags was used to calculate the ongoing maintenance cost of replacing bags. We assumed that facilities would be required to replace bags every two years for the devices that reported emissions above the considered limit. The cost of a replacement bag was estimated at $200 based on information submitted in the ICR. Other operating and maintenance costs were developed using information submitted in the ICR.

EPA-R9-2016-005534-0025115

For the WESP option, we used information submitted by Quemetco, Inc. in the ICR as a basis for estimating cost. We assumed that the configuration of the new WESP installations would be similar to that of Quemetco. More specifically, we assumed that facilities would use the WESP to control process and process fugitive emissions sources, but not general building ventilation sources. We used the rapid estimation exponential method described in Perry's Chemical Engineers' Handbook[3] to derive an equation representing the expected flow-rate into the WESP at each facility. Our estimate of annualized costs primarily includes electricity to operate the WESP and capital recovery.

3.2 Stack Emissions – Organic HAP and D/F

The formation of D/F occurs in the smelting furnaces and is highly dependent on the operating temperature of the furnace. Very small amounts of D/F were detected in the emissions streams of reverberatory furnaces; higher amounts were detected in the emissions streams of blast furnaces that were not collocated with reverberatory furnaces. Emissions data submitted in the ICR indicate that D/F emissions from collocated blast and reverberatory furnaces are lower than those from blast furnaces not collocated with reverberatory furnaces, indicating that comingling the flue gas streams of a blast furnace with the hotter stream of the reverberatory furnace is an effective D/F control option. Based on information submitted in the ICR, temperatures of the reverberatory stream are typically around 2200°F, likely high enough to raise the overall temperature of the combined blast and reverberatory furnace stream to that typically achieved by an afterburner. Studies of D/F destruction indicate that properly designed and operated afterburners with a sufficient residence time can achieve high destruction efficiency[4]. The majority of the blast furnaces in this source category that are not collocated with reverberatory furnaces use afterburners as a means of controlling organic HAP emissions. However, based on information submitted in the ICR, the majority of these afterburners are not operated at temperatures necessary for efficient destruction of D/F. We estimated that an afterburner operating at 1600°F with a residence time of 2.5 seconds or longer would achieve a 90 percent reduction in D/F emissions.

In order to estimate the capital cost of 90 percent control efficiency for D/F from blast furnaces, information contained in the ICR responses was used to determine the current furnace and afterburner temperature and residence time. We assumed that an existing afterburner would have the capability to increase the operating temperature 100°F without a major modification. Based on information submitted in the ICR, we determined that 5 of the 6 afterburners controlling blast furnaces (not collocated with reverberatory furnaces) in this source category

[3] Perry, Robert H & Green, Don W. (1984). *Perry's Chemical Engineers' Handbook*, (6th ed.). McGraw-Hill.
[4] Ficarella, Antonio and Laforgia, Domenico. Numerical simulation of flow-field and dioxins chemistry for incineration plants and experimental investigation, Waste Management 20 (2000) 27-49.

were not capable of achieving a temperature of 1600°F. Therefore, we estimated the capital and operating costs associated with installation of a new afterburner for these sources. Three facilities submitted cost data in the ICR for afterburner installations; the highest of the three estimates was chosen as the basis for our cost estimate. For the capital cost estimate, we assumed that the existing afterburner would remain in place and a new afterburner capable of increasing the temperature of the stream leaving the existing afterburner to a temperature of 1600°F would be installed. We used an equation modeled after equation 2.32 in the EPA Air Pollution Control Cost Manual to scale the size and cost of a thermal incinerator based on the reported flow-rates for each of the blast furnaces. The typical cost for an installed afterburner with a design flow-rate of 17,000 acfm was estimated at $1.2 million.

The annual cost of operating an afterburner was estimated using the approach described in the EPA Air Pollution Control Cost Manual. The cost of additional fuel required to increase the operating temperature of the afterburners was estimated based on the estimated amount of required natural gas. Other operating and maintenance costs were estimated using an approach described in EPA Air Pollution Control Cost Manual. The annual capital cost was estimated using a 20 year equipment life and a 7 percent interest rate.

3.3 Fugitive Emissions – Metal HAP

There are two general categories of fugitive emissions of metal HAP at a secondary lead facility: process fugitive emissions and fugitive dust emissions from material handling operations and re-entrainment of deposited dust. Process fugitive emissions result from furnace leaks and incomplete capture of emissions during tapping and charging of smelting furnaces. Charge materials contain fine lead-bearing particles that can be liberated during charging operations. Furnace upsets, particularly those caused by wet feed material, can result in overpressure of the smelting furnace. This may cause release of emissions that would normally be contained by negative pressure occurring inside the smelting furnaces. Process fugitive emissions can also result from incomplete capture of emissions at battery breakers, dryers, and refining and casting operations. Fugitive dust emissions can be generated during material handling operations. Lead bearing materials are transported throughout the plant in areas that may be open to the atmosphere. During transport, the material can spill or leak from the transport vehicles and settle on the floors and yards of the facilities. Wind, vehicle traffic, and other forces can then re-entrain the deposited dust as fine airborne particles. Stack emissions containing lead and other metal HAP can also settle onto surfaces near the facility and can be subsequently re-entrained as fine airborne particles.

The current MACT standard for control of fugitive emissions of metal HAP from secondary lead smelters requires process fugitive emissions sources to be captured by negative pressure enclosure hoods and vented to a control device. There is a minimum face velocity

requirement for the enclosure hoods that varies based on the emissions source. As an alternative to an enclosure hood requirement, the facility may operate the process fugitive emissions source in a building that is maintained at a lower than ambient pressure. The building ventilation air is required to be conveyed to a control device. Additional fugitive control work practice requirements in the current MACT standard include wetting of storage piles, cleaning of roadways, and washing of vehicles prior to leaving any areas where lead-bearing materials are handled.

EPA requested information in the ICR regarding the fugitive control techniques employed at each facility. Based on that information, we assessed the relative effectiveness of the controls implemented by each facility and estimated fugitive emissions at each facility based on that assessment (see Draft Development of the RTR Emissions Dataset for the Secondary Lead Smelting Source Category for more details). The facilities achieving low ambient lead concentrations at nearby monitors were assumed to achieve more efficient control of fugitive emissions. We assumed that facilities with ambient monitoring data showing lead concentrations above the lead NAAQS would need to install permanent total enclosures with ventilation to a control device and implement additional work practices to prevent the formation of fugitive dust in other areas of their facilities. This approach may overstate the costs for facilities that choose to demonstrate compliance through monitoring at the property boundary, and where operations are a significant distance from the property boundary.

For each facility, we estimated the area that is currently under a total enclosure ventilated to a control device. We then estimated the additional enclosure area necessary fully enclose the entire process. We assumed facilities that required a substantial area of new enclosures would re-configure their facility in a manner that reduces the overall footprint of the facility.

Enclosure costs were estimated using the EPA Air Pollution Control Cost Manual. We used the 2008 version of the Air Compliance Advisor (ACA) program, a program developed by the EPA to facilitate the calculations required in the EPA Air Pollution Control Cost Manual, to estimate the cost of the building. The costs were then adjusted to 2009 dollars. The costs considered sheet metal walls, 30 feet high interior, automatic roll-up doors, louvers, make up air fans, ductwork, pressure monitors, and smoke detectors. We ran the ACA program for two model buildings. The average building capital cost based on these two runs was estimated at $40 per square foot. This factor was used to the estimate the cost of the additional enclosure area required for all other facilities.

The capital cost of the control devices required to control the enclosure ventilation air was estimated based on the flow-rate required to maintain the building under sufficient negative pressure. Based on information submitted in the ICR, we estimated a flow-rate that would result

in an air turnover rate of five per hour in a building maintained under sufficient negative pressure. We estimated the cost of the baghouse using the methodology described in section 3.1 of this memorandum.

Annualized costs for the enclosures and associated baghouses were based on a 20 year life expectancy and 7 percent cost of capital. Annual operating costs for the baghouse were estimated based on data obtained in the ICR. We chose this methodology because we believed it to be more representative of actual operation and maintenance costs for this situation. Additional operating and maintenance costs were estimated for the enclosures using guidelines supplied in the EPA Air Pollution Control Cost Manual.

We calculated annual costs for required installation of two compliance monitors at the property boundary for each facility under regulatory options 1F and 2F. The monitoring costs were obtained from estimates made for similar monitors in the proposed revisions to the Primary Lead Smelting NESHAP, published February 17, 2011 (76 FR 94106).

We anticipate that the work practices specified in the existing Secondary Lead Smelting NESHAP will not be adequate to maintain fugitive emissions from this source category at an acceptable level. We estimated that an additional four employees per facility (one per shift for four shifts) at an annualized cost of $300,000 will be needed to implement the following additional fugitive control work practices: maintenance of negative pressure monitors in enclosures, monthly cleaning of rooftops, weekly cleaning of all areas where waste generated by housekeeping activities are stored or disposed of, immediate cleaning after accidental releases, inspections of enclosures once per month, daily inspection of battery storage area and immediate processing of cracked batteries, and thorough cleaning and inspection of any vehicles leaving the process area.

4.0 METHODOLOGY FOR ESTIMATING EMISSIONS REDUCTIONS

This section discusses the methodology used to estimate emissions reductions associated with the control options presented in sections 1.0 and 2.0 of this memorandum.

4.1 Stack Emissions – Metal HAP

a. Option 1S

For Option 1S, the outlet lead concentration reported for each stack in the ICR was compared to the limit considered in this regulatory option (i.e., 0.5 mg/dscm). If the reported concentration was above 0.5 mg/dscm, we assumed that the facility would need to install a new baghouse at that emissions point. We assumed that the outlet lead concentration from the newly installed baghouse would be equivalent to the average of all outlet lead concentrations reported

EPA-R9-2016-005534-0025119

in the ICR; we calculated this average to be 0.159 mg/dscm. We estimated the expected reduction in emissions as the difference between current stack emissions and the emissions that would occur assuming an outlet lead concentration of 0.159 mg/dscm (see Equation 1).

$$= [(\quad \times \quad) - (0.159 \times \quad)] \times \quad \times \qquad \text{(Eq. 1)}$$

Where:

C_i = outlet lead concentration reported in the ICR (mg/dscm),

F = flow rate (dscm/hr),

0.159 = expected outlet lead concentration of new baghouse (mg/dscm),

H = annual hours of operation, and

T = conversion factor for milligrams to tons (1.1×10^{-9}).

We concluded that 8 stacks throughout the industry would need new baghouse installations. One additional source reported an outlet lead concentration above 0.5 mg/dscm. However, they reported an ongoing project that includes upgrading the baghouse in question, and therefore, this source was not included in the emissions reduction calculation.

b. Option 2S

For option 2S, the stack lead emissions reported by each facility in the ICR were summed and divided by the annual lead production (average of 2008 and 2009) reported in the ICR. A statistical equation that considered variability in emissions was used to calculate a production based emissions limit of 0.009 lb/ton Pb. Based on emissions data received in the ICR, six facilities' emissions were above 0.009 lb/ton Pb. We assumed that these six facilities would sequentially replace or improve their existing baghouses one-by-one, starting with the units reporting the highest lead concentrations, until the facility's emissions were below 0.009 lb/ton Pb. Similar to option 1S, we assumed that a new baghouse could achieve an outlet lead concentration of 0.159 mg/dscm. We estimated that a total of 20 emissions points at six facilities would require reductions in lead emissions in this option. Total emissions reductions were calculated using Equation 1. We assumed emissions of other metal HAP would be reduced proportionally to lead emissions.

c. Option 3S

For Option 3S, we considered a facility-wide flow-weighted average lead concentration limit of 0.2 mg/dscm as well as a maximum lead concentration limit of 1.0 mg/dscm applicable to any individual stack. We calculated emissions reductions associated with the maximum concentration limit of 1.0 mg/dscm using a modified form of Equation 1. Based on this analysis, we estimated that three stacks would need replacement baghouses. Additionally, each facility's flow-weighted average lead concentration was calculated based on emissions data submitted in

the ICR. We then compared that value to facility-wide flow-weighted average limit of 0.2 mg/dscm considered in this option. We estimate that five facilities currently have a flow-weighted average lead concentration above the considered limit. We also considered the impacts of the proposed fugitive control standards presented in section 2.3 of this memorandum on the flow-weighted average concentration of each facility. Because we assumed that each facility will be required to have all processes under total enclosures with negative pressure and ventilation to a control device, we assumed that facilities needing additional enclosures would install one additional corresponding hygiene baghouse. Based on the average outlet lead concentration reported in the ICR for similar sources, we assumed that the outlet lead concentration from these hygiene baghouses would be 0.05 mg/dscm. We estimated that three of the five facilities initially identified as having emissions above the limit considered in this option would meet the considered limit after installation of the additional enclosures required in the fugitive control options. Furthermore, we estimate that replacing all baghouses reporting concentrations above 1.0 mg/dscm in combination with the installation of additional enclosures will result in all facilities being in compliance with the limits considered in this option. The total emissions reductions for this option were calculated using Equation 1.

d. Option 4S

For option 4S, we estimated emissions reductions of lead and other metal HAP using information submitted by Quemetco, Inc. regarding the efficiency of the WESP at their facility. Based on this information, we assumed that emissions of lead and other metal HAP from any source expected to be controlled by the WESP would be reduced by 99.98 percent.

4.2 Stack Emissions – Organic HAP and D/F

a. Option 1D

Option 1D considers MACT floor emissions limits for D/F (TEQ) based on furnace type. This option also includes setting MACT floor emissions limits for THC for furnace types that are not regulated in the existing NESHAP (i.e., reverberatory furnaces not collocated with a blast furnace, rotary furnaces, and electric furnaces). Based on our MACT floor calculation (see Draft MACT Floor Analysis for the Secondary Lead Smelting Source Category), we do not anticipate significant D/F or organic HAP emissions reductions associated with this option. However, we assume that facilities operating afterburners will likely increase the operating temperatures to ensure continuous compliance with the considered D/F limit. We believe reduction in D/F and other organic HAP on the order of 10 percent are possible using this assumption.

b. Option 2D

EPA-R9-2016-005534-0025121

Option 2D is a beyond-the-floor option for D/F that establishes a TEQ concentration limit of 17 ng/dscm for blast furnaces not collocated with a reverberatory furnace. Based on the study reference in section 3.2 of this memorandum, the D/F destruction efficiency of an afterburner operating at 1600°F with a residence time of 2.0 – 2.5 seconds is between 90 and 94 percent. For the purposes of calculating emissions reductions associated with this option, we assumed a 90 percent destruction efficiency of D/F and organic HAP for newly installed afterburners in this source category.

4.3 Fugitive Emissions – Metal HAP

For all the fugitive emissions control options considered, we assumed that all facilities would need to reduce their fugitive emissions to a level that would reduce ambient lead concentrations near their property boundary to levels below the lead NAAQS.

We derived factors to estimate the reductions in fugitive emissions that are likely to occur as a result of enclosing all manufacturing processes material handling operations. Reductions in fugitive emissions of 75 percent from baseline levels were estimated if new total enclosures were installed at a facility where only partial enclosures currently exist. Additional reductions of 80 percent (total reductions of 95 percent) were estimated as a result of implementation of the additional work practices described in section 3.3 of this memorandum. This methodology is described in detail in the Draft Development of the RTR Emissions Dataset for the Secondary Lead Smelting Source Category.

5.0 TESTING AND MONITORING COST IMPACTS

The existing NESHAP requires annual stack testing for lead and allows for reducing stack testing to every two years if the measured lead concentrations are below 1.0 mg/dscm. The regulatory options chosen for proposal in the revised NESHAP require annual stack testing for lead and THC and stack testing once every five years for D/F. The additional costs associated with the stack testing requirements above current costs are anticipated to be $750,000 per year (an average of $53,000 per facility).

Bag leak detection systems (BLDS) are required by the existing NESHAP for all baghouses unless a secondary HEPA filter is installed. The proposed revisions to the NESHAP eliminate the BLDS exemption for emissions points where secondary HEPA filters are installed. The capital cost associated with installation of seven new BLDS is $230,000 and was estimated using the EPA's bag leak detection guidance[5] and CEMS cost model (http://www.epa.gov/ttn/emc/cem.html). The capital cost associated with additional differential pressure monitors for total enclosures is $97,000.

[5] EPA Office of Air Quality Planning and Standards Fabric Filter Bag Leak Detection Guidance – (EPA 454/R-98-015).

The total estimated annualized cost for additional testing, monitoring, recordkeeping, and reporting considering the first three years after the proposed revisions are implemented is $1,020,000. A detailed burden estimate is available in the docket for this rulemaking (*Supporting Statement, National Emission Standards for Secondary Lead Smelting*).

6.0 SUMMARY OF COST BY FACILITY

Table 6-1 is a summary of estimated costs for each of the facilities in the secondary lead smelting source category.

Table 6-1 Summary Cost Estimates by Facility*

Facility	Total Capital Cost	Total Annual Cost
Doe Run	18,200,000	3,550,000
East penn	0	380,000
EnviroFocus	0	390,000
Exide Baton Rouge	7,250,000	1,890,000
Exide Forest City	2,560,000	750,000
Exide Frisco	4,390,000	1,160,000
Exide Muncie	0	360,000
Exide Reading	5,630,000	1,320,000
Exide Vernon	0	87,000
Gopher Eagan	0	350,000
Quemetco (CA)	0	87,000
Quemetco (IN)	0	94,000
RSR	0	87,000
Sanders	9,520,000	2,048,000
Total	**47,550,000**	**12,553,000**

*Some of these cost estimates are likely overstated since some facilities may be able to comply with the rule under the alternative compliance option (i.e., monitoring at facility boundary and implementing work practices) and may not need to construct full enclosures. If so, actual costs would be significantly lower than shown here for those facilities.

EPA-R9-2016-005534-0025123

Option 2S 0.009 lbton

SourceFile	BaghouseControlEquipmentID	ControlDeviceInstallationYear	InletGasFlowRate_dscfm	NumberOfCompartments	NumberOfBagsOrCartridgesPerCompartment	Capital cost Estimate	Annualized Capital cost	Additional Annual O&M	Bag Replacement cost	Total Annualized cost over current cost	Capital cost Estimate by facility	Annualized Capital cost by Facility	Annual O&M by Facility	Bag Replacement cost by Facility	Total Facility Annualized cost above current cost
Buick RRF	CD8-EP08	1967	325,000	14	416	5,625,750	531,031	156,000	349,440	1,036,471					
Buick RRF	CD27-EP71	2003	60,000	4	256	259,650	24,509	28,800	61,440	114,749					
Buick RRF	EP-73		27,166	3	352	470,237	44,387	13,039	63,360	120,786					
Buick RRF	EP-16		33,985	3	352	588,284	55,530	16,313	63,360	135,203	6,943,920	655,457	214,152	537,600	1,407,209
East Penn	S202		30,000	1	384		-	14,400	23,040	37,440	-	-	14,400	23,040	37,440
Exide Frisco	HARDLEADBH	1978	25,616	4	216	443,420	41,856	12,296	51,840	105,992					
Exide Frisco	SPECALLOY	1978	74,382	3	216	1,287,552	121,536	35,703	38,880	196,119					
Exide Frisco	SOFTLEADBH	1978	52,093	6	288	901,733	85,117	25,005	103,680	213,802					
Exide Frisco	NewBLAST-Reverb	1969	62,401	5	200	1,080,165	101,960	29,953	60,000	191,912					
Exide Frisco	FURNFUG	?	113,167	6	288	1,958,924	184,909	54,320	103,680	342,909					
Exide Frisco	RMSTG	?	91,883	8	288	1,590,491	150,131	44,104	138,240	332,475					
Exide Frisco	Dryer BH	?	20,000	4	216		-	9,600	51,840	61,440	7,262,286	685,508	210,981	548,160	1,444,649
Exide Baton Rouge	#1 BH	1973	90,000	10	528	1557900	147,055	43,200	316,800	507,055					
Exide Baton Rouge	#4 BH	1977	45,000	8	288	778,950	73,527	21,600	138,240	233,367					
Exide Baton Rouge	#5 BH	1979	35,000	3	352	605850	57,188	16,800	63,360	137,348	2,942,700	277,770	81,600	518,400	877,770
Exide Reading	C22	1984	80,000	4	264	1,384,800	130,715	38,400	63,360	232,475					
Exide Reading	C11		60,000	5	80	1,038,600	98,036	28,800	24,000	150,836					
Exide Reading	C19		74,945	5	80	1,297,294	122,455	35,974	24,000	182,429					
Exide Reading	C47	2000	84,000	5	276	1,454,040	137,251	40,320	82,800	260,371	5,174,734	488,458	143,494	194,160	826,112
Sanders	BH 1	1970	90,720	10	288	1,570,363	148,231	43,546	172,800	364,577	1,570,363	148,231	43,546	172,800	364,577
					average	1,327,445									
					Total	23,894,004	2,255,425	708,172	1,994,160	4,957,757	23,894,004	2,255,425	708,172	1,994,160	4,957,757

Note: East Penn is not currently within the limit established, however one baghouse had a test with much higher values than previous test. Assume East Penn needs only additional maintenance or bag replacement.

Assumptions:

Costs calculated for limit based on 0.009 lb lead emissions per ton product

Facilities listed would need upgrade/ replacement of existing baghouses

Baghouses selected based on emission rate needed to comply with lb/ton limit

Survey data used for flowrate, number of compartments and number of bags

Cost for baghouses were derived from data submitted in survey - Model facility used

Annualized cost assumes 7% cost of capital, 20 year life

Annual O&M cost derived from data submitted in survey. Compared with cost of replacing bags at $200/bag for tef lon on teflon bag, cost seems reasonable, estimated additional O&M over current is 25%

For cost over current cost of operating a baghouse, estimated that bags would be changed more often than current (2 years vs 5)

Facilities would meet the revised Lead limit for facility wide emissions

Option 1S Conc 0.5

SourceFile	BaghouseControlEquipmentID	ControlDeviceInstallationYear	Pb Conc	Pb Emissions TPY	Anticipated Pb Emission Reduction	InletGasFlowRate_acfm	NumberOfCompartments	NumberOfBagsOrCartridgesPerCompartment	Capital cost Estimate	Annualized Capital cost	Additional Annual O&M	Bag Replacement cost	Total Annualized cost over current cost	cost Effectiveness $/ton HAP
Buick RRF	CD8-EP08	1967	1.19	3.46	3.0	325000	14	416	5,625,750	531,031	156,000	349,440	1,036,471	
Buick RRF	EP-73		1.27	0.43	0.4	27166	3	352	470,237	44,387	13,039	63,360	120,786	
Buick RRF	EP-16		0.53	0.22	0.2	33985	3	352	588,284	55,530	16,313	63,360	135,203	
Exide Frisco	Feed Dryer	2007	0.585	0.54	0.4	81197	4	216		-	38,974	51,840	90,814	
Exide Baton Rouge	#1 BH	1973	1.26	1.49	1.3	90000	10	528	1,557,900	147,055	43,200	316,800	507,055	
Exide Baton Rouge	EP93-3		0.506	0.34	0.2	44208	3	458		-	21,220	82,419	103,639	
Exide Reading	C22	1984	0.657	0.39	0.3	80000	4	264	1,384,800	130,715	38,400	63,360	232,475	
Sanders	BH 1	1970	0.619	0.72	0.5	90720	10	288	1,570,363	148,231	43,546	172,800	364,577	
Sanders	BH4		0.723	0.31	0.2	35000	3	352	605,850	57,188	16,800	63,360	137,348	
									-	-	0	0	0	
			Total	7.9	6.5				11,803,184	1,114,137	387,492	1,226,739	2,728,368	329,752
					8.3	Total Metal HAP reduction								

Option 1S- Concentration limit established at about 0.5 mg/dscm

Assumptions:

Facilities listed would need upgrade/ replacement of existing baghouses
Survey data used for existing baghouses at facilities.

Cost for baghouses were derived from data submitted in survey - Model facility used
Annualized cost assumes 7% cost of capital, 20 year life
Annual O&M cost derived from data submitted in survey. Added to cost of replacing bags at $200/bag for teflon on teflon bag, estimated additional O&M over current is 25%
For cost over current cost of operating a baghouse, estimated that bags would be changed more often than current (2 years vs 5)

Baghouses chosen for replacement would allow facilities to meet proposed concentration limit
average lead concentration from all stacks is 0.159, assumption for emission reduction is based on achieving this concentration

Option 3S (1.00 0.2)

SourceFile	BaghouseControlEquipmentID	ControlDeviceInstallationYear	Pb Conc	Pb Emissions TPY	Emission Reduction	InletGasFlowRate_acfm	NumberOfCompartments	NumberOfBagsOrCartridgesPerCompartment	Capital cost Estimate	Annualized Capital cost	Additional Annual O&M	Bag Replacement cost	Total Annualized cost over current cost	cost Effectiveness $/ton HAP
Buick RRF	CD8-EP08	1967	1.19	3.46	3.0	325,000	14	416	5,625,750	531,031	156,000	349,440	1,036,471	
Buick RRF	EP-73		1.27	0.43	0.4	27,166	3	352	470,237	44,387	13,039	63,360	120,786	
Exide Baton Rouge	#1 BH	1973	1.26	1.49	1.3	90,000	10	528	1,557,900	147,055	43,200	316,800	507,055	
				5.4	4.7			Total	7,653,887	722,473	212,239	729,600	1,664,312	$ 280,690
					reduction assuming									

Scenario- 1.0 mg/dscm limit and 0.3 mg/dscm average

Metal HAP 5.92

Assumptions:

Facilities listed would need upgrade/ replacement of existing baghouses
Survey data used for existing baghouses at facilities.
Cost for baghouses were derived from data submitted in survey - Model facility used (see tab Baghouse cost)

Annualized cost assumes 7% cost of capital, 20 year life
Annual O&M cost derived from data submitted in survey. Compared with cost of replacing bags at $200/bag for teflon on teflon bag, estimated additional O&M over current is 25%
For cost over current cost of operating a baghouse, estimated that bags would be changed more often than current (2 years vs 5)
Facilities would meet the revised Lead MACT floor for facility wide emissions
average lead concentration from all stacks is 0.159, an alternate assumption for emission reduction is based on achieving this concentration

Option 3F Fugitive Control Cost

Facility	Total Enclosed Area Needed ft2	Building Capital Cost	New CF to be ventilated	Baghouse Capital ($)	Total Capital cost	Annualized Capital cost Baghouse + building	Baghouse Annual Operating cost($)	Enclosure Annual operating cost	Enclosure and baghouse operating cost	Enclosure and baghouse total Annual cost	Work practice estimate	Annual Operation and Maintenance cost (total)	Total Annual cost
Exide Baton Rouge	66,488	2,659,514	1,994,636	3,031,846	5,691,360	537,224	337,093	66,488	403,581	940,805	300,000	703,581	1,240,805
Exide Forest City	29,880	1,195,185	896,389	1,362,511	2,557,696	241,428	151,490	29,880	181,369	422,798	300,000	481,369	722,798
Exide Frisco	51,281	2,051,220	1,538,415	2,338,391	4,389,611	414,348	259,992	51,281	311,273	725,621	300,000	611,273	1,025,621
Exide Reading	65,816	2,632,620	1,974,465	3,001,187	5,633,807	531,792	333,685	65,816	399,500	931,292	300,000	699,500	1,231,292
Doe Run	141,590	5,663,584	4,247,688	6,456,486	12,120,070	1,144,049	717,859	141,590	859,449	2,003,498	300,000	1,159,449	2,303,498
EnviroFocus	20,139				-						300,000	300,000	300,000
Sanders	111,183	4,447,336	3,335,502	5,069,963	9,517,299	898,366	563,700	111,183	674,883	1,573,249	300,000	974,883	1,873,249
Total listed facilities		18,649,459		21,260,383	39,909,842					6,597,262	2,100,000	4,930,055	8,697,262
Total Level 1 facilities					27,328,729					4,517,552	900,000	2,837,913	5,417,552
Total Level 2 facilities					12,581,114					2,079,710	900,000	1,792,142	2,979,710
Level 3 facilities											900000	900,000	900,000
Total All Facilities					39,909,842	3,767,207	2,363,819	466,236	2,830,055	6,597,262	3,000,000	5,830,055	9,597,262

Assumptions:

Unenclosed or partially enclosed facilities would need to enclose area and vent to baghouse

Unenclosed or partially enclosed faciliites would reduce their facility footprint to the size of an enclosed facility with similar production.

Using the reduced footprint methodology, the capital cost of building and baghouse was reduced by up to40%

Buildings are 30 ft tall

Baghouse cost estimated from data submitted by facilities in survey. EPA cost manual data was significantly higher

Baghouse operating data was submitted in the survey for the control device used to estimate capital cost

Baghouse operating data verified against cost to replace bags on a bi-annual basis, costs were similar

Building O&M cost was estimated at $1 / ft sq ft. This cost was estimated using the Air Compliance Advisor program for Permanent Total Enclosures

Building cost was estimated at $40 /ft2. this cost was estimated using twomodel facilities in the Air Compliance Advisor for Permanent Total Enclosures.

The higher cost estimate of the twofaciliites in $/ft2 was used toestimate all facilities

Not enough facility specific information on cost to retrofit was available for an alternate retrofit cost

Cost data for a building was submitted by Quemetco, CA in January 2011. This cost was not considered in the analysis as the cost was very high compared to other estimates

No capital cost was estimated for Envirofocus as this facility is currently undergoing an expansion and upgrade. Practices described will meet control level required.

Level 2 definition - total facility enclosures vented to baghouse

Level 3 defnition - Level 2 plus additional work practices equivalent toSouth Coast California rule

Option 1F &2F

Facility	Total Enclosed Area Needed ft2	Building Capital Cost	New CF to be ventilated	Baghouse Capital ($)	Total Capital cost	Annualized Capital cost Baghouse + building	Baghouse Annual Operating cost($)	Enclosure Annual operating cost	Enclosure and baghouse operating cost	Enclosure and baghouse total Annual cost	Work practice estimate	Annual Operation and Maintenance cost (total)	Ambient Monitoring Cost	Total Annual cost
Exide Baton Rouge	66,488	2,659,514	1,994,636	3,031,846	5,691,360	537,224	337,093	66,488	403,581	940,805	300,000	703,581	23,128	1,240,805
Exide Forest City	29,880	1,195,185	896,389	1,362,511	2,557,696	241,428	151,490	29,880	181,369	422,798	300,000	481,369	23,128	722,798
Exide Frisco	51,281	2,051,220	1,538,415	2,338,391	4,389,611	414,348	259,992	51,281	311,273	725,621	300,000	611,273	23,128	1,025,621
Exide Reading	65,816	2,632,620	1,974,465	3,001,187	5,633,807	531,792	333,685	65,816	399,500	931,292	300,000	699,500	23,128	1,231,292
Doe Run	141,590	5,663,584	4,247,688	6,456,486	12,120,070	1,144,049	717,859	141,590	859,449	2,003,498	300,000	1,159,449	23,128	2,303,498
EnviroFocus	20,139				-						300,000	300,000	23,128	300,000
Sanders	111,183	4,447,336	3,335,502	5,069,963	9,517,299	898,366	563,700	111,183	674,883	1,573,249	300,000	974,883	23,128	1,873,249
Total listed facilities		18,649,459		21,260,383	39,909,842					6,597,262	2,100,000	4,930,055	161,896	8,697,262
Total Level 1 facilities					27,328,729					4,517,552	900,000	2,837,913	69,384	5,417,552
Total Level 2 facilities					12,581,114					2,079,710	900,000	1,792,142	69,384	2,979,710
Level 3 facilities											900000	900,000	161,896	900,000
Total All Facilities					39,909,842	3,767,207	2,363,819	466,236	2,830,055	6,597,262	3,000,000	5,830,055	323,792	9,597,262

Assumptions:

Unenclosed or partially enclosed facilities would need to enclose area and vent to baghouse

Unenclosed or partially enclosed faciliites would reduce their facility footprint to the size of an enclosed facility with similar production.

Using the reduced footprint methodology, the capital cost of building and baghouse was reduced by up to 40%

Buildings are 30 ft tall

Baghouse cost estimated from data submitted by facilities in survey. EPA cost manual data was significantly higher

Baghouse operating data was submitted in the survey for the control device used to estimate capital cost

Baghouse operating data verified against cost to replace bags on a bi-annual basis, costs were similar

Building O&M cost was estimated at $1 / ft sq ft. This cost was estimated using the Air Compliance Advisor program for Permanent Total Enclosures

Building cost was estimated at $40 /ft2. this cost was estimated using two model facilities in the Air Compliance Advisor for Permanent Total Enclosures.

The higher cost estimate of the two faciliites in $/ft2 was used to estimate all facilities

Not enough facility specific information on cost to retrofit was available for an alternate retrofit cost

Cost data for a building was submitted by Quemetco, CA in January 2011. This cost was not considered in the analysis as the cost was very high compared to other estimates

No capital cost was estimated for Envirofocus as this facility is currently undergoing an expansion and upgrade. Practices described will meet control level required.

Level 2 definition - total facility enclosures vented to baghouse

Level 3 defnition - Level 2 plus additional work practices equivalent to South Coast California rule

Secondary Lead Control Cost **Incremental Improvement with increase in afterburner temperature**

Control of THC / Dioxin-Furan

Facility	Furnace Type	Blast Furnace Flow rate requiring control (scfm)	Existing Afterburner Operating Temp (deg F) - if no AB, Furnace Temp	Existing AB residence time	Temp increase required (deg F)	Fuel cost
Doe Run	Mixed	10,000	500	-	-	-
East penn	Co-located					
EnviroFocus	Blast					
Exide Baton Rouge	Reverb					
Exide Baton Rouge	Blast	21,505	700	3	100	$ 78,966.36
Exide Forest City	Blast					
Exide Frisco	Mixed	24,000	1,525	1	75	$ 66,096.00
Exide Muncie	Co-located					
Exide Reading	Co-located					
Exide Vernon	Mixed					
Gopher Eagan	Co-located					
Quemetco (CA)	Reverb					
Quemetco (IN)	Reverb					
RSR	Reverb					
RSR	Rotary					
Sanders	Blast	16,000	1,300	3	100	$ 58,752.00
Sanders	Blast	16,000	1,300	3	100	$ 58,752.00
						$ 262,566

Assumptions

A 10% reduction in D/F and organics is possible with improved operating practices and increase in afterburner temperature of 100 deg F

Beyond the floor MACT for Blast furnaces would require 1600 degree afterburner to achieve control of dioxins

$/MM BTU Nat Gas 4

Assumed the existing afterburner would remain in place. Additional afterburner fuel cost to increase temperature 100 deg F

Secondary Lead Control Cost **Beyond the floor option for controlling Blast Furnaces**

Control of THC / Dioxin-Furan

Facility	Furnace Type	Blast Furnace Flow rate requiring control (scfm)	Existing Afterburner Operating Temp (deg F) - if no AB, Furnace Temp	Existing AB residence time	New AB required (Y/N)	AB Installed cost	Temp increase required (deg F)	Fuel cost	Electricity (KWH)	Electricity $/yr	Annual Capital Cost	O&M cost	Indirect Operating cost	Total Annual O&M	Annual cost - total
Doe Run	Mixed	10000	500	0	Yes	1,040,310	1100	403,920	839,800	57,526	98,198	13,688	49,825	524,959	623,157
East penn	Co-located				No										
EnviroFocus	Blast				No										
Exide Baton Rouge	Reverb				No										
Exide Baton Rouge	Blast	21505	700	3	Yes	1,259,788	900	710,697	1,805,990	123,710	118,915	13,688	58,604	906,699	1,025,614
Exide Forest City	Blast				No										
Exide Frisco	Mixed	24000	1525	1	Yes	1,294,838	75	66,096	2,015,520	138,063	122,224	13,688	60,006	277,853	400,076
Exide Muncie	Co-located				No										
Exide Reading	Co-located				No										
Exide Vernon	Mixed				No										
Gopher Eagan	Co-located				No										
Quemetco (CA)	Reverb				No										
Quemetco (IN)	Reverb				No										
RSR	Reverb				No										
RSR	Rotary				No										
Sanders	Blast	16000	1300	2.5	Yes	1,170,019	300	176,256	1,343,680	92,042	110,441	13,688	55,013	336,999	447,440
Sanders	Blast	16000	1300	2.5	Yes	1,170,019	300	176,256	1,343,680	92,042	110,441	13,688	55,013	336,999	447,440
						5,934,974		1,533,225		503,384	560,220	68,438	278,461	2,383,508	2,943,728

Assumptions

Beyond the floor MACT for Blast furnaces would require 1600 degree afterburner to achieve control of co-located furnaces

$/KWH	0.0685
$/MM BTU Nat Gas	4
Labor cost / hr	25

Electricity KWH calculated from equation in http://www.epa.gov/ttn/catc/dir1/cs3-2ch2.pdf
corrected for density of air at 600 deg F

Assumed the existing afterburner would remain in place. Additional afterburner fuel cost to increase temperature to 1600 deg F

Used afterburner cost data submitted in Section 114 survey for three afterburner installations to estimate base capital cost. Used highest of 3 total installed cost

Derived new equation to account for flow rate - modeled after equation 2.32 in EPA cost estimation manual for Incinerators

Operating cost approach developed from EPA cost manual for incinerators.

Used afterburner operating cost data submitted in Section 114 survey as a reference. Cost is similar to that calculated in this sheet.

Cost estimated using Air Compliance Advisor (EPA cost manual program), values significantly higher than these costs. Elected to use industry supplied data as the base

Summary of WESP Control Cost by Facility

Facility	WESP ACFM	Capital cost Estimate	Annualized Capital cost	Operating Cost	Total Annualized Cost
Doe Run	446,428	46,623,434	4,400,922	2,331,172	6,732,094
East penn	167,436	25,885,878	2,443,444	1,294,294	3,737,738
EnviroFocus	79,986	16,617,415	1,568,566	830,871	2,399,437
Exide Baton Rouge	203,901	29,134,304	2,750,072	1,456,715	4,206,787
Exide Forest City	95,362	18,466,254	1,743,084	923,313	2,666,396
Exide Frisco	253,113	33,169,760	3,130,991	1,658,488	4,789,479
Exide Muncie	224,391	30,857,250	2,912,706	1,542,862	4,455,569
Exide Reading	286,727	35,746,589	3,374,225	1,787,329	5,161,555
Exide Vernon	251,490	33,041,957	3,118,927	1,652,098	4,771,025
Gopher Eagan	325,023	38,539,167	3,637,825	1,926,958	5,564,783
Quemetco (CA)	94,556	18,000,000			
Quemetco (IN)	115,468	20,712,408	1,955,105	1,035,620	2,990,725
RSR	145,133	23,758,174	2,242,604	1,187,909	3,430,512
Sanders	245,173	32,541,498	3,071,687	1,627,075	4,698,762
Total		**403,094,087**	**36,350,158**	**19,254,704**	**55,604,862**

	WESP ACFM	Furnace Only ACFM
Doe Run	446,428	266,855
East Penn	167,436	42,601
EnviroFocus	79,986	35,550
Exide Baton Rouge	203,901	126,340
Exide Forest City	95,362	95,362
Exide Frisco	253,113	52,001
Exide Muncie	224,391	26,497
Exide Reading	286,727	88,779
Exide Vernon	251,490	127,105
Gopher Eagan	325,023	106,060
Quemetco CA	94,556	94,556
Quemetco IN	115,468	48,692
RSR	145,133	113,211
Sanders	245,173	191,322
	2,934,187	1,414,930

Activated Carbon Injection Model Costs

Facility/Unit ID	Annual operating	Exhaust gas flow rate (Q)	Operating labor rate	Activated carbon cost (ACC)	Dust disposal cost (DDC)	Capital recovery factor, 20-yr equipment life, 7% interest (CRF)	Cost index 2008	Cost index 1990	ACI Adjustment Factor (AF)	ACI Adjustment Factor (AF)	Capital Investment Total	Unit cost
Facility name	hr/yr	dscfm	$/hr	$/lb	$/ton				for HG control	for D/F control	$	$/dscfm
FacilityID						= [i x (1 + i)^a] / [(1 + i)^a - 1], where i = interest rate, a = equipment life					= 4,500 x (Q/1,976)$^{0.6}$ x (1.2 retrofit factor) x (575.4/361.3)	= $ / Q
Doe Run	8500	266855	$51.26	$1.38	$42.14	0.09439	575.4	361.3	1.00		$163,226	$0.61
East Penn	8500	42601	$51.26	$1.38	$42.14	0.09439	575.4	361.3	1.00		$54,284	$1.27
EnviroFocus	8500	35550	$51.26	$1.38	$42.14	0.09439	575.4	361.3	1.00		$48,700	$1.37
Exide Baton Rouge	8500	126340	$51.26	$1.38	$42.14	0.09439	575.4	361.3	1.00		$104,219	$0.82
Exide Forest City	8500	95362	$51.26	$1.38	$42.14	0.09439	575.4	361.3	1.00		$88,034	$0.92
Exide Frisco	8500	52001	$51.26	$1.38	$42.14	0.09439	575.4	361.3	1.00		$61,183	$1.18
Exide Muncie	8500	26497	$51.26	$1.38	$42.14	0.09439	575.4	361.3	1.00		$40,826	$1.54
Exide Reading	8500	88779	$51.26	$1.38	$42.14	0.09439	575.4	361.3	1.00		$84,335	$0.95
Exide Vernon	8500	127105	$51.26	$1.38	$42.14	0.09439	575.4	361.3	1.00		$104,597	$0.82
Gopher Eagan	8500	106060	$51.26	$1.38	$42.14	0.09439	575.4	361.3	1.00		$93,833	$0.88
Quemetco CA	8500	94556	$51.26	$1.38	$42.14	0.09439	575.4	361.3	1.00		$87,586	$0.93
Quemetco IN	8500	48692	$51.26	$1.38	$42.14	0.09439	575.4	361.3	1.00		$58,816	$1.21
RSR	8500	113211	$51.26	$1.38	$42.14	0.09439	575.4	361.3	1.00		$97,579	$0.86
Sanders	8500	191322	$51.26	$1.38	$42.14	0.09439	575.4	361.3	1.00		$133,685	$0.70

$1,220,904

Activated Carbon
Injection Model Costs

Unit-specific field

Facility/Unit ID	Direct Annual					Indirect Annual			Total Annual Cost	
Facility name	Operating labor	Supervisory labor	Maintenance	Activated carbon	Dust disposal	Overhead	Property taxes, insurance, and administration	Capital recovery	Total cost	
	$/yr	$/yr	$/yr	$/yr	$/yr	$/yr	$/yr	$/yr	$/yr	($/yr) / dscfm
FacilityID	= (0.25 hr/8-hr shift) x H x LR	= 0.15 x (operating labor)	= 0.2 x TCI	= 0.00127 x Q x H x ACC x AF	= 0.00127 x Q x (1 ton/2,000 lb) x H x DDC x AF	= 0.6 x (labor + maintenance materials)	= 0.04 x TCI	= CRF x TCI	= Direct Annual Costs + Indirect Annual Costs	= ($/yr) / Q
Doe Run	$13,616	$2,042	$32,645	3975365.621	60696.34321	$28,982	$6,529	$15,407	$4,135,284	$15.50
East Penn	$13,616	$2,042	$10,857	634631.3571	9689.625141	$15,909	$2,171	$5,124	$694,041	$16.29
EnviroFocus	$13,616	$2,042	$9,740	529596.8707	8085.946424	$15,239	$1,948	$4,597	$584,865	$16.45
Exide Baton Rouge	$13,616	$2,042	$20,844	1882095.145	28736.04689	$21,901	$4,169	$9,838	$1,983,241	$15.70
Exide Forest City	$13,616	$2,042	$17,607	1420617.25	21690.14889	$19,959	$3,521	$8,310	$1,507,363	$15.81
Exide Frisco	$13,616	$2,042	$12,237	774664.0971	11827.66125	$16,737	$2,447	$5,775	$839,346	$16.14
Exide Muncie	$13,616	$2,042	$8,165	394725.0397	6026.707672	$14,294	$1,633	$3,854	$444,356	$16.77
Exide Reading	$13,616	$2,042	$16,867	1322542.192	20192.72753	$19,515	$3,373	$7,961	$1,406,110	$15.84
Exide Vernon	$13,616	$2,042	$20,919	1893496.889	28910.13003	$21,947	$4,184	$9,873	$1,994,989	$15.70
Gopher Eagan	$13,616	$2,042	$18,767	1579986.426	24123.41594	$20,655	$3,753	$8,857	$1,671,800	$15.76
Quemetco CA	$13,616	$2,042	$17,517	1408610.188	21506.82366	$19,905	$3,503	$8,268	$1,494,969	$15.81
Quemetco IN	$13,616	$2,042	$11,763	725369.5932	11075.02705	$16,453	$2,353	$5,552	$788,224	$16.19
RSR	$13,616	$2,042	$19,516	1686515.588	25749.91554	$21,104	$3,903	$9,211	$1,781,658	$15.74
Sanders	$13,616	$2,042	$26,737	2850138.001	43516.23744	$25,437	$5,347	$12,619	$2,979,453	$15.57

$22,305,698

AmbMonitoring Cost

	Cost	Annual cost per monitor	Number of monitors / site	Total Annual cost	Total cost- 14 facilities
Ambient Lead Monitoring (lab analysis) per test	127	7725.8	2	15452	216,323
Ambient Monitoring Equipment Annual Lease	2500	2500	2	5000	70,000
Labor to collect and ship samples, analyze data	22	1338.3	2	2677	37,473
Total monitoring cost				23,128	323,797

Ambient monitors tested once every 6 days

References:

Table 3.5 - Additional Testing and Monitoring Costs, Primary Lead Smelting Technical Support document

Appendix D

BUSCH FEF-50 Quote

BUSCH INTERNATIONAL

10431 PERRY HIGHWAY, WEXFORD, PA 15090
PHONE 724 -940 -2326 FAX 724 -940 -4140

TO: ENVIRON INTERNATIONAL CORPORATION
ATTN: RUSSELL KEMP

FROM: LOIS MCELWEE, X 208

SUBJECT: PRELIMINARY PROPOSAL V-6750

DATE: MAY 6, 2011

Russell,

Per you r request, we are pleased to furnish budget pricing for Carbon Steel construction, as follows:

One (1) FEF Model FEF-50 air filtration units 50,000 CFM with the following:

- Fully-welded unit housing with full structural base and open grating in filter section. Grating is Carbon Steel.
- Pyramidal hopper shipped loose
- HEPA header sealing system with stainless steel frames and HEPA filter bolt lock type.
- High capacity absolute 2000 cfm; 99.97% DOP HEPA filters with neoprene gasketing downstream. HEPA filters will be shipped loose for installation by others.
- Pre-piped pulse system with header, pulse pipes and pulse valves with solenoids . Header and pipes of carbon st eel with industrial enamel finish.
- Primary filtration section includes filter cages, Galvanized Steel 11 gauge wire and pulse filter media installed . Thimbles a re 360 degree seal welded.
- Dirty side – back wall, side walls, roof, tube sheet, doors and in let collar constructed of Carbon Steel. Floor grating is Carbon Steel.
- Clean side – two (2) compartments side walls, roof, doors and floor constructed of Carbon Steel.

BUSCH INTERNATIONAL

10431 PERRY HIGHWAY, WEXFORD, PA 15090
PHONE 724 -940 -2326 FAX 724 -940 -4140

- Fan - Backward Inclined belt driven 50,000 CFM with 125 HP motor
- Outlet Volume Control Damper; manual control
- Shipped complete with fan and motor wired and installed

Walls and roof are minimum 10 Gauge material and Tube Sheet and floor are minimum 7 Gauge material. Structural base is carbon steel with standard finish. Sandblast epoxy available at additiona l cost and is recommended for outdoor locations.

Approximate Unit dimensions: 31' long x 11'6" wide x 12' high; hopper top flange is approximately 17' long x 10' wide. T.O.P. is bottom of hopper flange suited for a 9" screw conveyor by others. T.O.P. is f lange of fan outlet damper and inlet flange on top of unit.

Total net budgetary price for (1) FEF-50 unit..... $ 298,000

FOB Factory; freight collect; shipment 22-24 weeks after drawing approval.

Allow 6-8 weeks for drawings.

Pricing is firm for 30 days

Terms net 30 days – progress payments: 20% down payment, 20% completio n of sub vendor order placement, 20% issue of shop orders for fabrication, and 40% shipment. Terms and conditions attached.

Lois McElwee

BUSCH INTERNATIONAL

F:\DATA\PROP RELATED\V-PROP\V-67XX\V-6750 ENVIRON CORP - FEF\PROPOSAL\PROPOSAL V6750.DOC

EPA-R9-2016-005534-0025137

FEF SERIES

Fugitive Emission Filtration Units

A CECO Environmental Company

BUSCH INTERNATIONAL

10431 Perry Highway • Wexford, PA 15090
Phone: 724.940.2326 • Fax: 724.940.4140
busch@cecoenviro.com

Provides Secondary Emissions Control of Metallurgical Fumes

Busch International FEF SERIES industrial grade, fugitive emission filtration units use high efficiency self-cleaning fabric filtration tubes. The equipment removes heat and fugitive dusts from metallurgical melting process applications. The modules are factory assembled with filtration system, pulse cleaning, fabric tubes, controls, and main air blower on a common structural base.

Significant cost savings over field assembled systems are realized because the FEF SERIES units are shipped pre-assembled, wired and factory tested. Minimum field labor is required for unit installation. Only connection to main power and compressed air source is necessary to initiate operation. Multiple modules are arranged for a built-up system with air volume capacity as required to satisfy the project requirements.

The FEF SERIES units come in standard sizes available for simple installation. Unit arrangement and dimensions, location, connections, materials of construction and wiring can be modified to meet individual user specifications. Project costs are often lower when compared to built up systems consisting of baghouse modules, interconnecting duct and separate fans. Construction features include a structural base, steel plate floor, heavy gauge welded housing panels and heavy duty door hardware. Centrifugal fans are minimum Class III construction and are backwardly inclined power limiting design. Direct driven fans eliminate belt maintenance. Electrical enclosures are NEMA 12 or NEMA 4 with wiring in rigid or flexible conduit. Optional electrical enclosures are available to suit plant standards.

FEF SERIES units are designed to store dust within the base of the compartment or storage hopper below.

Collection of secondary lead oxide emissions using four FEF SERIES units.

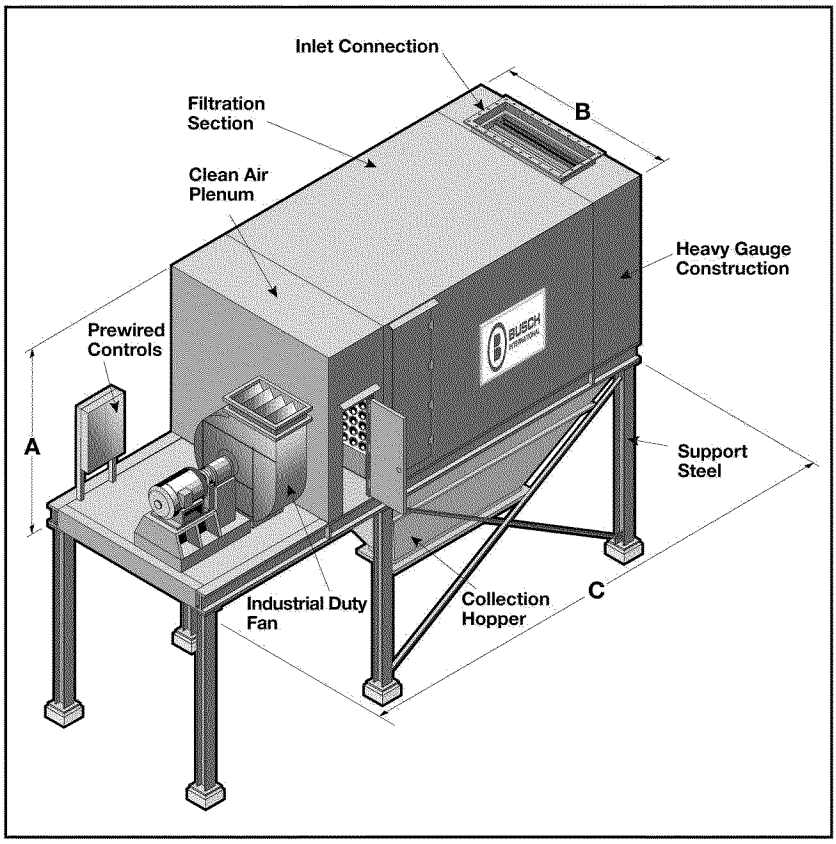

A typical FEF Series unit arrangement.

Accessories and Options

- Alternate paint systems
- Hoppers for dust storage
- Gas adsorption
- Sound attenuator
- Variable speed drives
- HEPA safety filters
- Dampers
- Screw conveyor
- Stainless steel construction
- Support steel and platforms

Dimensional Data

MODEL NO.	CAPACITY SCFM	DIMENSIONS		
		A	B	C
FEF-10	10,000	5'-6"	5'-0"	18'-0"
FEF-20	20,000	7'-6"	7'-0"	20'-6"
FEF-30	30,000	9'-6"	7'-6"	24'-0"
FEF-40	40,000	10'-0"	10'-0"	26'-0"
FEF-50	50,000	11'-0"	12'-0"	30'-0"

Dimensions and sizes are for reference only.

Bulletin No. FEF-802

Appendix E

EPA's Draft Summary of the Technology Review for the Secondary Lead Smelting Source Category

MEMORANDUM

To: Chuck French, U.S. Environmental Protection Agency, OAQPS

From: Mike Burr, Donna Lazzari, and Danny Greene, ERG

Date: April 2011

Subject: Draft Summary of the Technology Review for the Secondary Lead Smelting Source Category

---

This memorandum summarizes the results of an analysis to identify developments in practices, processes, and control technologies for emissions sources of hazardous air pollutants (HAP) from the Secondary Lead Smelting source category. This analysis is part of EPA's review efforts in accordance with section 112(d)(6) of the Clean Air Act (CAA). This memorandum is organized as follows:

1.0 Background

- 1.1 Requirements of Section 112(d)(6) of the CAA
- 1.2 Description of the Secondary Lead Smelting Source Category and Requirements of the Current NESHAP

2.0 Developments in Practices, Processes and Control Technologies

- 2.1 Stack Emissions
- 2.2 Fugitive Emissions

3.0 Recommended Revisions Based on Developments in Practices, Processes and Control Technologies

- 3.1 Stack Emissions
- 3.2 Fugitive Emissions

4.0 Conclusions

1.0 BACKGROUND

1.1 Requirements of Section 112(d)(6) of the CAA

Section 112 of the CAA requires EPA to establish technology-based standards for sources of HAP. These technology-based standards are often referred to as maximum achievable control technology, or MACT, standards. Section 112 also contains provisions requiring EPA to periodically revisit these standards. Specifically, paragraph 112(d)(6) states:

EPA-R9-2016-005534-0025140

(6) REVIEW AND REVISION. – The Administrator shall review, and revise as necessary (taking into account developments in practices, processes, and control technologies), emissions standards promulgated under this section no less often than every 8 years.

1.2 Description of the Secondary Lead Smelting Source Category and Requirements of the Current NESHAP

The current National Emissions Standards for Hazardous Air Pollutants (NESHAP) for the Secondary Lead Smelting source category was promulgated on June 13, 1997 (62 FR 32216) and codified at 40 CFR part 63, subpart X. As promulgated in 1997, the NESHAP applies to affected sources of HAP emissions at secondary lead smelters. The current NESHAP (40 CFR 63.542) defines "secondary lead smelters" as "any facility at which lead-bearing scrap material, primarily, but not limited to, lead-acid batteries, is recycled into elemental lead or lead alloys by smelting." The secondary lead smelting process consists of: (1) pre-processing of lead bearing materials, (2) melting lead metal and reducing lead compounds to lead metal in the smelting furnace, and (3) refining and alloying the lead to customer specifications. The NESHAP for the Secondary Lead Smelting source category does not apply to primary lead smelters, lead remelters, or lead refiners.

Today, there are 14 secondary lead smelting facilities that are subject to the NESHAP. No new secondary lead smelters have been built in the last 20 years, and no new secondary lead smelting facilities are anticipated in the foreseeable future, although one facility is currently in the process of expanding their operations.

HAP are emitted from secondary lead smelting as stack releases (i.e., process emissions, and process fugitive emissions) and fugitive dust emissions. Process emissions include exhaust gases from feed dryers and from blast, reverberatory, rotary, and electric furnaces. The HAP in process emissions are comprised primarily of metals (mostly lead compounds, but also some arsenic, cadmium, and other metals) and also may include organic compounds that result from incomplete combustion of coke that is charged to the smelting furnaces as a fuel or fluxing agent, combustion of natural gas or other fuels, or combustion of small amounts of plastics or other materials that get fed into the furnaces along with the lead-bearing materials. Process fugitive emissions are released from various sources throughout the smelting process, including smelting furnace charging and tapping points, refining kettles, agglomerating furnace product taps, and drying kiln transition equipment. Process fugitive emissions are comprised primarily of metal HAP. Fugitive dust emissions are emissions that are not associated with a specific process or process fugitive vent or stack. Process fugitive emissions are comprised of metal HAP and result

EPA-R9-2016-005534-0025141

from the entrainment of HAP in ambient air due to material handling activities, vehicle traffic, wind, and other activities.

The current NESHAP applies to process emissions from blast, reverberatory, rotary, and electric smelting furnaces, agglomerating furnaces, and dryers; process fugitive emissions from smelting furnace charging points, smelting furnace lead and slag taps, refining kettles, agglomerating furnace product taps, and dryer transition equipment; and fugitive dust emissions from roadways, battery breaking areas, furnace charging and tapping areas, refining and casting areas, and material storage areas. For process sources, the current NESHAP specifies numerical emissions limits for total hydrocarbons (THC) and lead compounds for blast furnaces and collocated blast and reverberatory furnaces. Additionally, emissions limits for lead are specified for reverberatory, electric, and rotary furnaces. Lead compound emissions from all smelting furnace configurations are limited to an outlet concentration of 2.0 milligrams per dry standard cubic meter (mg/dscm) (0.00087 grains per dry standard cubic foot (gr/dscf)) (40 CFR 63.543(a)). THC emissions from collocated blast and reverberatory furnaces are limited to an outlet concentration of 20 parts per million volume (ppmv) (expressed as propane) corrected to 4 percent carbon dioxide (CO_2). THC emissions are limited to 360 ppmv (as propane) at 4 percent CO_2 from existing blast furnaces and 70 ppmv (as propane) at 4 percent CO_2 from new blast furnaces (40 CFR 63.543(c)). The current NESHAP does not specify limits for THC emissions from reverberatory furnaces not collocated with blast furnaces, rotary furnaces, or electric furnaces.

The current NESHAP requires that process fugitive emissions sources be equipped with an enclosure hood meeting minimum face velocity requirements or be located in a total enclosure subject to general ventilation that maintains the building at negative pressure (40 CFR 63.543(b)). Ventilation air from the enclosure hoods and total enclosures are required to be conveyed to a control device. Lead emissions from these control devices are limited to 2.0 mg/dscm (0.00087 gr/dscf) (40 CFR 63.544(c)). Lead emissions from all dryer emissions vents and agglomerating furnace vents are limited to 2.0 mg/dscm (0.00087 gr/dscf) (40 CFR 63.544(d)). The current NESHAP also requires the use of bag leak detection systems for continuous monitoring of baghouses in cases where a high efficiency particulate air (HEPA) filter are not used in series with a baghouse (40 CFR 63.548(c)(9)).

For fugitive dust sources, the current NESHAP requires that facilities develop and operate according to a standard operating procedures (SOP) manual that describes, in detail, the measures used to control fugitive dust emissions from plant roadways, battery breaking areas, furnace areas, refining and casting areas, and material storage and handling areas.

2.0 DEVELOPMENTS IN PRACTICES, PROCESSES, AND CONTROL TECHNOLOGIES

For the purposes of this technology review, a "development" was considered to be a (n):

- add-on control technology or other equipment that was not identified during the development of the current NESHAP for the source category;
- improvement in add-on control technology or other equipment that was identified and considered during development of the current NESHAP for the source category that could result in significant additional HAP emissions reductions;
- work practice or operational procedure that was not identified during development of the current NESHAP for the source category; or
- applicable process change or pollution prevention alternative that was not identified and considered during the development of the current NESHAP for the source category.

We investigated developments in practices, processes, and control technologies for three categories of HAP emissions sources from secondary lead smelters: (1) stack emissions of lead and other metal HAP, (2) stack emissions of organic HAP, and (3) fugitive emissions of lead and other metal HAP. To identify developments, we conducted searches of EPA's RACT/BACT/LAER (Reasonably Achievable Control Technology/Best Available Control Technology/Lowest Achievable Emissions Rate) clearinghouse and the Internet for information on secondary lead smelting and similar processes, examined the Section 114 information collection request (ICR) responses from the 14 secondary lead smelting facilities, reviewed technologies employed by similar industries, and reviewed new or updated NESHAPs for other source categories. The results of these analyses are presented in the following sections.

2.1 <u>Stack Emissions</u>

The current NESHAP specifies emissions limits for metal HAP (using lead as a surrogate) and organic compounds (using THC as a surrogate) from stacks. This section of the technology review will focus on developments in practices, processes, and control technologies applicable to emissions of metal HAP and organic compounds from stacks.

a. Metal Hap Emissions from Stacks

Based on a review of the ICR responses, the most common control technology employed by the industry to control emissions of metal HAP from stacks is fabric filtration (or baghouses). Several types of baghouses are currently used by the industry, including shaker, pulse jet, and reverse pulse jet bag filters. One facility uses a wet electrostatic precipitator (WESP) downstream of a baghouse to further reduce emissions of metal HAP from stacks. Two other facilities have plans to install similar WESP units. Several facilities also reported using HEPA filters as an add-on control downstream of their baghouses. Additionally, some facilities reported using cartridge collectors; however these types of controls are generally suited to reduce

EPA-R9-2016-005534-0025143

metal HAP emissions from sources that have lower inlet concentrations and are typically not used to control metal HAP in smelting furnace exhaust.

The first part of our analysis included attempting to determine which control technology (e.g., fabric filter, WESP, HEPA filter, cartridge collectors) achieves the greatest control efficiency for metal HAP. We could not directly calculate control efficiencies due to lack of inlet concentration data; however, we compared the outlet lead concentrations from the different control technologies based on emissions data that we received in the ICR.

As displayed in Figure 2-1, the average stack outlet lead concentration from the baghouse and WESP combination was almost 50 times lower than the outlet concentration achieved by using baghouses alone. HEPA filters used downstream of a baghouse achieved approximately 20 percent lower outlet lead concentrations than baghouses alone. Cartridge collectors appear to achieve outlet lead concentrations approximately three times lower than baghouses; however, as mentioned, cartridge collectors are generally limited to emissions points with lower flow rates and inlet loading concentrations.

Figure 2-1. Comparison of Control Device Outlet Lead Concentrations from Different Technologies.

Based on emissions data received in the ICR, we also compared the relative performance of each baghouse across facilities and attempted to determine the factors that correlate best with low outlet lead concentrations. The factors that we considered include baghouse type (e.g., shaker, pulse jet, reverse bag pulse), filter material, and age of the unit. Figure 2-2 shows the results of these analyses. Based on our analysis, the most significant factor affecting baghouse performance is the age of the unit. We found that units installed prior to 1989 generally had significantly higher outlet lead concentrations than the newer units. Shaker baghouses appear to have higher outlet lead concentrations than those of the pulse jet or reverse bag pulse type.

EPA-R9-2016-005534-0025144

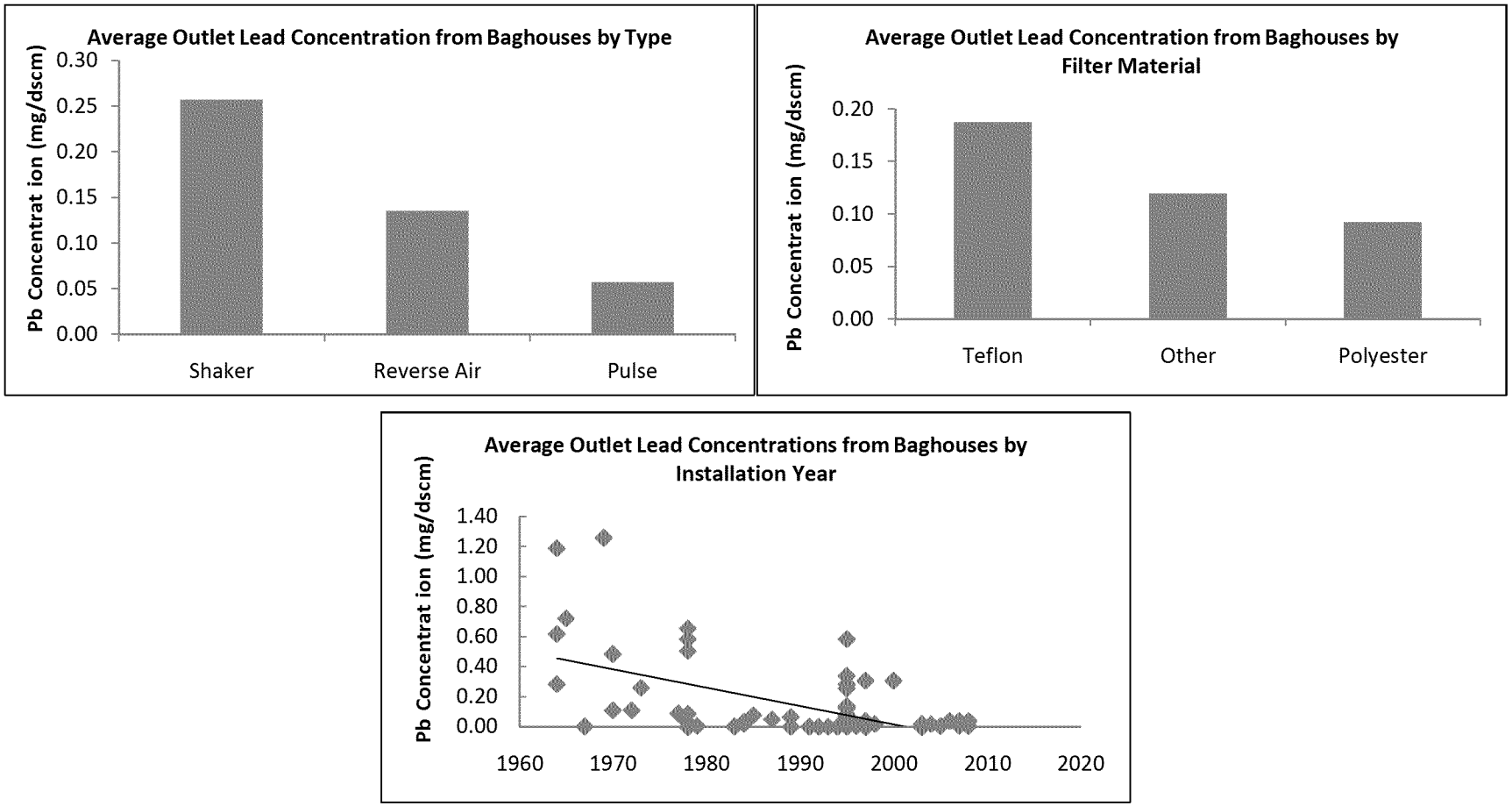

Figure 2-2. Comparison of Baghouse Outlet Lead Concentrations Based on Type (Upper Left), Filter Media (Upper Right), and Installation Year (Bottom).

However, the majority of the older units appear to be shaker types, and thus the age of the baghouse may be the controlling factor. We did not find a significant correlation between the outlet lead concentration and the filtration media used in the baghouses, although one company in the industry suggested, based on its experience, that Teflon (polytetrafluoroethylene) bags specifically supplied by Gore-Tex© performed better than other bag types. The company also suggested that the most critical factors influencing baghouse performance are proper installation and maintenance practices. They mentioned specific practices such as ensuring proper installation of the bags and properly sealing all ducts and dust conveyance devices. Additionally, they claim that replacing torn bags, rather than repairing them, can significantly improve baghouse performance.

Based on our analyses, we believe that the most important development in the control of stack emissions of metal HAP from this source category has been improvement in the performance of baghouses throughout the industry. The biggest indicator of such improvements is the level of metal HAP emissions currently being achieved in the industry in relation to the allowable level in the current NESHAP (referred to as "MACT-allowable"), which is a lead based concentration standard of 2.0 mg/dscm for all stacks. Figure 2-3 shows the lead concentrations reported by the industry in the ICR compared to the lead concentration limit in the current NESHAP. As illustrated by Figure 2-3, the outlet lead concentrations currently being achieved by the industry are far below, and in most cases orders of magnitude below, the concentration limit specified in the current NESHAP. The average reported stack lead concentration was 0.16 mg/dscm with a median of 0.04 mg/dscm. This large discrepancy between actual and MACT-allowable stack lead concentrations is likely a result of improvements in practices, processes, and control technologies that have significantly improved the performance of baghouses employed by this industry since the promulgation of the current NESHAP. We also believe that the concentration data presented in Figure 2-3 clearly show that improvements in baghouse technology and operation have occurred that resulted in the capability of achieving significantly lower stack lead emissions than what is required by the current NESHAP.

b. Organic HAP and Dioxin and Furan Emissions

Based on our review of the ICR responses, we found that emissions of organic HAP from smelting furnaces vary substantially among the different furnace types. In general, emissions of organic HAP from blast furnaces are much higher than those from other furnace types. Information collected in the ICR indicates that this is likely due to the much lower exit temperature of the blast furnace exhaust relative to the other furnace types. The majority of facilities that operate blast furnaces use afterburners to control emissions of organic HAP. The exhaust of reverberatory furnaces is sufficiently hot that the use of an afterburner is generally not

required to meet the current THC limit. Some facilities that operate both blast and reverberatory furnaces comingle the hotter reverberatory furnace stream with the cooler blast furnace stream to control organics in the blast furnace stream. We did not identify new control technologies or developments in the mentioned existing control technologies that would achieve reductions in organic HAP emissions beyond the limits established in the current NESHAP.

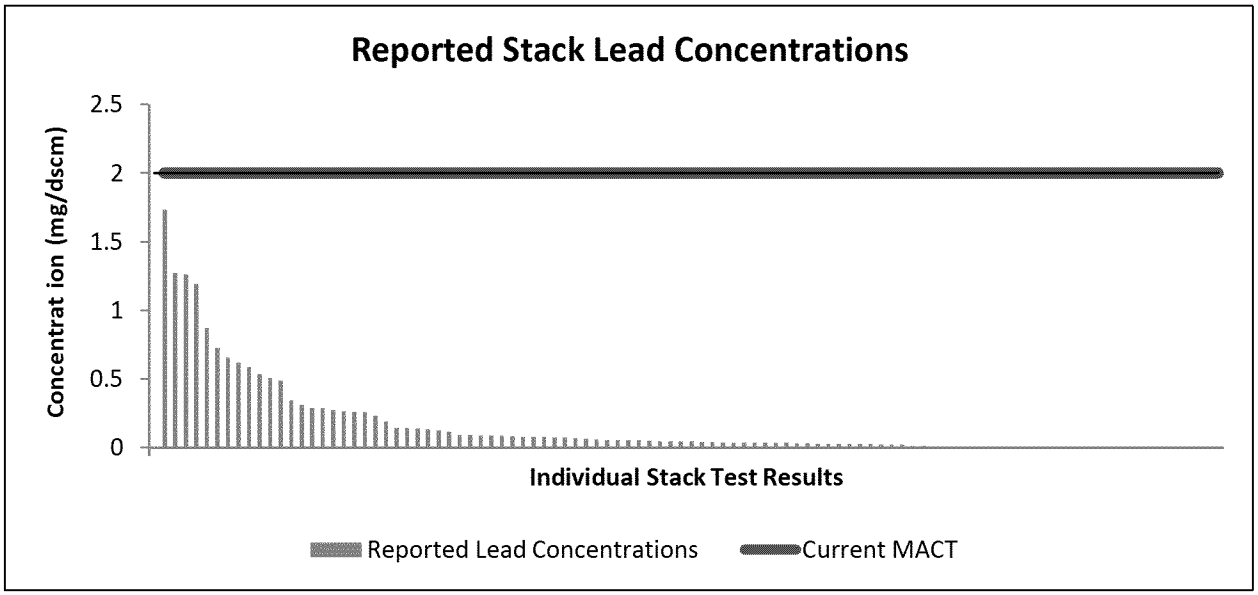

Figure 2-3. Comparison of Stack Lead Concentrations Reported by the Industry with the Current MACT Standard.

Although dioxin and furan (D/F) emissions limits are not specified in the current NESHAP, we investigated technologies available for prevention and/or control of D/F emissions from the smelting furnaces. Based on data submitted by the industry in the ICR, D/F emissions from blast furnaces are one to three orders of magnitude higher than emissions from reverberatory and electric furnaces. The key conditions typically associated with higher D/F emissions, listed in order of relative importance[1], are:

- Poor combustion conditions,
- High particulate concentration in the flue gases of a combustion process,
- Increased residence time for particulate in critical temperature window (150 - 450 degrees Celsius),
- Particulate matter containing metals that can catalyze formation to dioxin,
- Waste or fuel that is comprised of complex organic or lignin-like structure, and

[1] Gullett, Brian (EPA) and Seeker, Randy (EER Corporation), *Chlorinated Dioxin and Furan Formation Control and Monitoring.* Presentation at the Industrial Combustion Coordinated Rulemaking Meeting. September 17, 1997.

- Sufficient chlorine.

We believe the controlling factor for D/F formation in blast furnaces is the relatively low exit temperature of the exhaust stream in comparison to other furnace types.

We identified two technologies employed by this source category that have demonstrated effective control of D/F emissions from blast furnaces: (1) incineration of the furnace exhaust, and (2) comingling of the blast furnace exhaust with the hotter reverberatory furnace exhaust. Based on information submitted in the ICR and information in the literature on dioxin destruction efficiency, operating an afterburner at sufficient temperature (approximately 1,600 degrees Fahrenheit) with adequate residence time (approximately 2.0-2.5 seconds) can achieve significant reductions in D/F emissions from blast furnaces[2]. Additionally, emissions data submitted in the ICR indicate that D/F emissions from collocated blast and reverberatory furnaces are generally lower than emissions from a blast furnace alone. Average exhaust D/F concentrations of the various furnace types are summarized in Table 2-1.

Table 2-1. Summary of Exhaust D/F Concentrations by Furnace Type.

Furnace Type	Average D/F (nanograms/dscm)
Reverberatory furnaces not collocated with blast furnaces, and reverberatory furnaces mixed with electric furnaces	0.10
Blast Furnaces	38.83
Collocated Blast and Reverberatory Furnaces	0.19
Rotary Furnaces	0.14

A review of technologies employed by other industries to control D/F emissions concluded that injecting activated carbon into the exhaust stream can also achieve significant reductions of D/F emissions; however, the costs associated with this technology for this source category were determined to be high (see Draft Cost Impacts of the Revised NESHAP for the Secondary Lead Smelting Source Category).

Because the presence of chlorine is necessary for D/F formation, we also examined the potential sources of chlorine in the feed materials charged to the smelting furnaces. Historically, the plastic battery casings used in the construction of automotive batteries contained polyvinyl chloride (PVC). Although battery casings are no longer made of PVC, the battery casings can sometimes contain small amounts of chlorinated flame retardants. This material may be introduced into the furnace through incomplete separation of the battery casing material from the

---

[2] Ficarella, Domenico and Laforgia, Domenico, *Numerical Simulation of Flow-Field and Dioxins Chemistry for Incineration Plants and Experimental Investigation,* Waste Management, 20 (2000) 27-49. http://www.bvsde.paho.org/bvsacd/cd43/antonio.pdf

EPA-R9-2016-005534-0025148

lead-bearing material in the feed preparation process. Chlorine may also be present in the coke fed to the furnace as a fuel and reducing agent. Moreover, we believe that occasionally some older batteries that still contain PVC casings could be processed.

Based on our review, the main control of D/F emissions occurs due to measures initially implemented to control organic HAP emissions (i.e., incineration and co-mingling of furnace exhaust streams). We identified one other control technology with the potential to reduce D/F emissions (i.e., carbon injection); however, the costs to apply this technology were determined to be high.

2.2 Fugitive Emissions

As outlined in section 1.2 of this memorandum, the pollutants emitted from fugitive emissions sources in this source category are metal HAP. Therefore, we focused on identifying advancements in practices, processes, and control technologies related to fugitive emissions of metal HAP. Sources of fugitive emissions at secondary lead smelters include dust from plant roadways, battery breaking operations, material storage areas, and process fugitives that are not captured by a control device.

The minimum requirements for control of fugitive emissions in the current NESHAP for the following specified fugitive sources are:

- Plant roadways – must be cleaned twice per day;
- Battery breaking area – partial enclosure of storage piles and wet suppression with twice daily pavement cleaning;
- Furnace and refining and casting areas – partial enclosure and pavement cleaning; and
- Material Storage and Handling Areas – partial enclosure, wet suppression, and vehicle wash at exits.

Based on our analysis of information received in the ICR, we grouped the facilities into three categories that describe the level of fugitive emissions control implemented. Table 2-2 defines these categories and Table 2-2 summarizes our categorization for each facility.

Table 2-2. Enclosure Category Definitions.

Enclosure Category	Description
Level 1 Enclosure	Facilities described as having Level 1 enclosure meet the enclosure requirements in the current NESHAP. The facilities rely primarily on enclosure hoods to capture process fugitive emissions and partial enclosures with wet suppression for process units and storage areas.
Level 2 Enclosure	Facilities described as having Level 2 enclosure generally employ, in addition to enclosure hoods for process fugitive sources, a combination of negative pressure total enclosures and partial enclosures with wet suppression for process units and storage areas.

EPA-R9-2016-005534-0025149

Enclosure Category	Description
Level 3 Enclosure	Facilities described as having Level 3 enclosure generally employ, in addition to enclosure hoods for process fugitive sources, negative pressure total enclosures for all process units and storage areas.

Table 2-3. Enclosure Category Assigned to the 14 Secondary Lead Smelting Facilities.

Facility	Enclosure Category
Exide Technologies – Baton Rouge, LA	Level 1
Exide Technologies – Forest City, MO	Level 2
Exide Technologies – Frisco, TX	Level 2
Exide Technologies – Muncie, IN	Level 3
Exide Technologies – Reading, PA	Level 2
Exide Technologies – Vernon, CA	Level 3
Revere Smelting And Refining – Middletown, NY	Level 3
Quemetco Inc. – Industry, CA	Level 3
Quemetco Inc. – Indianapolis, IN	Level 3
Sanders Lead Co. – Troy, AL	Level 1
EnviroFocus Technologies – Tampa, FL	Level 2
Gopher Resources – Eagan, MN	Level 3
Buick Resource Recycling Facility – Boss, MO	Level 1
East Penn Manufacturing – Lyons, PA	Level 3

As displayed in Table 2-3, our analysis concludes that 11 of the 14 facilities are controlling fugitive emissions beyond the levels required by the current NESHAP. Additionally, seven of the 14 facilities have placed all of their process areas in total enclosures under negative pressure with ventilation to a control device. Furthermore, an 8th facility (EnviroFocus Technologies) has a current project to implement level 3 enclosure. Of the seven facilities that are currently level 3 enclosures, several facilities claimed performing additional work practices (beyond the enclosures) that exceed the requirements of the current NESHAP to further limit the formation of fugitive dust in other areas of their facilities. Examples of these work practices include:

- more complete vehicle washing inside buildings;
- improved roadway cleaning techniques and frequency;
- pavement of entire facility grounds;
- cleaning of building roofs and exteriors;

- use of daily ambient monitoring to diagnose plant activities that lead to exceedances of the National Ambient Air Quality Standards (NAAQS) for lead;
- timely cleaning of accidental releases;
- inspection of outside battery storage areas for broken batteries; and
- performance of all maintenance activities inside total enclosures operated under negative pressure.

Our analysis of ambient lead concentration data measured near the facilities indicates that facilities with level 3 enclosure that implement the work practices described above are generally achieving much lower lead concentrations near their property boundaries (see Figure 3-2). For this reason, we believe that developments in practices, processes, and control technologies with regard to fugitive emissions of metal HAP have occurred that can result in reduced metal HAP emissions from fugitive sources beyond the standards contained in the current NESHAP.

3.0 RECOMMENDED REVISIONS BASED ON DEVELOPMENTS IN PRACTICES, PROCESSES, AND CONTROL TECHNOLOGIES

Based on the analyses presented above, we are recommending the following revisions to the current NESHAP with regards to stack and fugitive emissions from the Secondary Lead Smelting source category.

3.1 Stack Emissions

As described in section 2.1 of this memorandum, the concentrations of lead in stacks reported by this industry in the ICR are far below the level specified in the current NESHAP, indicating improvements in the control of metal HAP emissions since promulgation of the current NESHAP. Our analysis indicates that this is primarily a result of improved performance of baghouses. Therefore, we recommend revising the current NESHAP to reflect the level of performance currently being achieved by facilities that implement well-performing baghouses to control emissions of metal HAP from stacks.

When considering the most appropriate form of a revised lead standard for this source category, we considered alternatives to the current form (i.e., outlet lead concentration). However, our analysis indicates that a concentration-based lead standard continues to be the most appropriate form for this industry. We then attempted to determine the appropriate reduction to the current lead concentration limit of 2.0 mg/dscm. As outlined in section 2.1, the average stack concentration of lead reported by the industry in the ICR was 0.16 mg/dscm with a median concentration was 0.04 mg/dscm. Over 96 percent of the reported concentrations were less than half the current limit of 2.0 mg/dscm and over 80 percent of the reported concentrations were at least an order of magnitude less than the current limit. Our analyses conclude that advancements in the performance of baghouses appear to be the controlling factor for these lower concentrations and that reducing the current lead concentration limit from 2.0 to 0.2

EPA-R9-2016-005534-0025151

mg/dscm would reflect the level of control achieved in practice by facilities that implement well-performing baghouses.

Figure 3-1 compares the lead concentrations reported by the industry in the ICR with a potential revised lead concentration limit of 0.2 mg/dscm. Although the majority of stacks reported concentrations well below 0.2 mg/dscm, a limited number of stacks would need improvements, possibly in the form of improved maintenance practices on their existing baghouses or installation of newer, more efficient units. To provide the facilities flexibility in determining the best approach to meeting a revised concentration limit, we considered proposing a facility-wide flow-weighted average lead concentration limit of 0.2 mg/dscm. For this limit, facilities would assign a weighting factor to each stack lead concentration based on the flow rate of the stack. They would then sum the flow-weighted concentration of all the stacks at their facility to get a facility-wide flow-weighted concentration. A limit in this form would reflect the level of metal HAP emissions control being achieved in practice by well performing baghouses while providing flexibility to the facilities in determining the most cost-effective approach to achieving the necessary reductions.

As required under section 112(d)(6), we considered the costs and other impacts associated with revising the lead concentration limit in the manner described above. As described in the Draft Cost Impacts of the Revised NESHAP for the Secondary Lead Smelting Source Category, we estimate that three baghouses at two facilities would need to be replaced as a result of the revised limit. The estimated total capital cost is $7.7 million with a total annualized cost of $1.7 million. We estimate that the revised limit would result in annual reductions of metal HAP of approximately 5.9 tons with co-reductions in emissions of particulate matter (PM) of approximately 56 tons. We do not anticipate additional energy use associated with this revised limit, as only replacement baghouses, as opposed to new additional units, are expected. Furthermore, we do not anticipate any adverse non-air environmental impacts associated with the implementation of this revised limit.

For these reasons, we are recommending that a flow-weighted average lead concentration limit of 0.2 mg/dscm be applied to the sum of all stacks at each facility in this source category. To limit the potential impacts of any individual stack, we are also recommending that a maximum lead concentration limit of 1.0 mg/dscm be applied to individual stacks in this source category. This is warranted given the fact that, as described above, over 96 percent of stack lead concentrations reported in the ICR were less than 1.0 mg/dscm.

EPA-R9-2016-005534-0025152

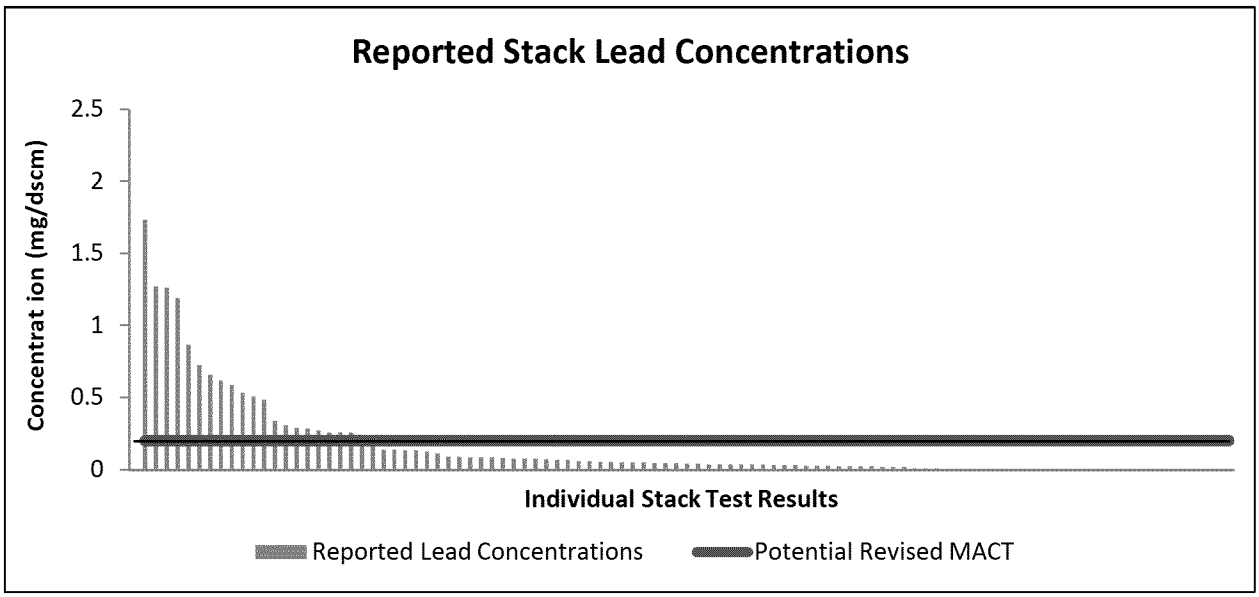

Figure 3-1. Comparison of Stack Lead Concentrations Reported by the Industry with a Potential Revised Lead Concentration Limit.

3.2 Fugitive Emissions

As outlined in section 2.2 of this memorandum, several facilities in this source category are currently implementing controls for fugitive emissions of metal HAP that exceed what is required in the current NESHAP. Based on our analyses, we are recommending revising the current NESHAP to reflect the level of control currently being achieved by the better performing facilities in this source category with regards to fugitive emissions of metal HAP.

Because fugitive emissions cannot be directly captured or measured, the most feasible limit is a work practice standard. Although lack of direct measurement makes comparisons of the efficiency of different control technologies challenging, analysis of ambient lead monitoring data near the facilities has generally been considered an accurate indicator of the level of fugitive emissions of metal HAP. The Draft Residual Risk Assessment for the Secondary Lead Smelting Source Category presents dispersion modeling results for this source category indicating that fugitive emissions are overwhelmingly the most significant source contributing to ambient lead concentrations near the property boundaries of secondary lead smelting facilities. The same modeling results indicate that fugitive lead emissions from this source category could result in exceedances of the lead NAAQS at 12 of the 14 facilities.

We analyzed available ambient monitoring data to determine which facilities were implementing the most effective controls for fugitive emissions of metal HAP. Figure 3-2

displays the annual average lead concentrations at ambient monitoring locations around facilities based on the enclosure category assigned to the facility in section 2.2 of this memorandum. The figure includes concentration data for 12 of the 14 facilities (monitoring data near Exide Baton Rouge and Exide Forest City were not available). All data in this figure were taken from http://www.epa.gov/airexplorer/monitor_kml.htm. The most recent year's monitoring data available (either 2008 or 2009 for each facility) was selected for each facility. In cases where data were available at multiple monitoring locations around a facility, we chose the monitor with the highest annual lead concentration.

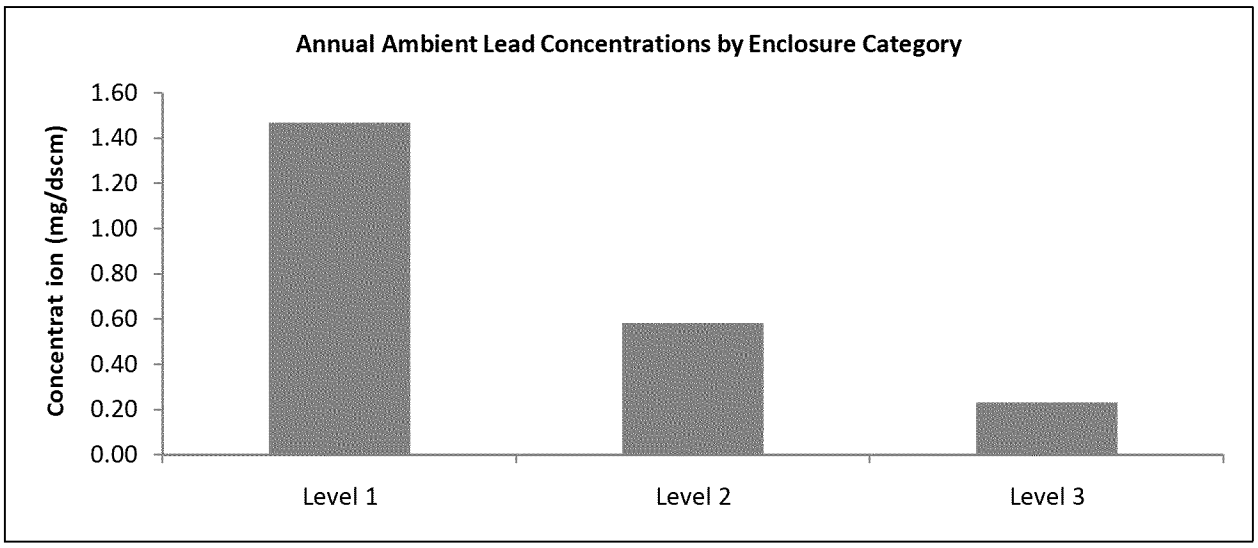

Figure 3-2. Comparison of Annual Ambient Lead Concentrations for Each Enclosure Category.

As the figure shows, facilities categorized as level 3 enclosures achieved significantly lower ambient lead concentrations than those classified as level 1 or 2 enclosures. As previously mentioned, seven of the 14 facilities are currently classified as level 3 enclosures, with an 8th facility planning to implement level 3 enclosures in the near future. Of the facilities classified as having level 3 enclosures, four facilities also implement some or all of the additional work practices mentioned in section 2.2 to further prevent the formation of fugitive dust in other areas of their facilities. Based on this analysis, we concluded that level 3 enclosure plus the implementation of additional fugitive control work practices is necessary to achieve ambient lead concentrations below the NAAQS near the fence line of a facility. Because several facilities are already implementing these controls and because we estimate that these controls are necessary to ensure to ensure ambient lead concentrations below the NAAQS, we recommend revising the current NESHAP to require these controls.

As with the revised stack lead concentration limit discussed in section 3.1 of this memorandum, we considered the potential cost impacts of revising the fugitive emissions standard in the current NESHAP to include the controls mentioned above. As described in the Draft Cost Impacts of the Revised NESHAP for the Secondary Lead Smelting Source Category, we estimate that the total capital cost to implement level 3 enclosure and additional fugitive control work practices throughout the industry is approximately $40 million with a total annualized cost of approximately $9.6 million. We estimate reductions in metal HAP emissions of 9.5 tons per year resulting from this revised standard with co-reductions of PM of approximately 104 tons. We do not anticipate any adverse non-air environmental impacts associated with this recommended standard. However, we do anticipate some additional energy use associated with the operation of the new total enclosure. After consideration of the costs, emissions reductions, and other potential impacts, we believe the revision of the fugitive emissions standard for this source category to include the control measures described in this memorandum is warranted and necessary.

As an alternative to requiring level 3 enclosure and the implementation of an extensive list of fugitive control work practices, we recommend that facilities be allowed to demonstrate compliance through ambient lead monitoring. If facilities are able to demonstrate ambient lead concentrations near their facility that are below the lead NAAQS using practices other than those specified above, then it can be concluded that they are achieving a similar level of control as would be achieved by the control measures described in this memorandum. Providing such an alternative would allow the facilities flexibility in determining the most appropriate and cost-effective method of achieving the necessary reductions in fugitive emissions of metal HAP.

4.0 CONCLUSIONS

This review identified several developments in practices, processes, or control technologies that have been implemented in this source category since promulgation of the current NESHAP. Our analysis indicates that several facilities have significantly reduced stack emissions of metal HAP, primarily though improved performance of baghouses. Additionally, several facilities have implemented fugitive emissions control practices that exceed the requirements of the current NESHAP. Based on our review, we conclude that it is feasible and cost-effective for facilities to achieve a facility-wide, flow-weighted average lead concentration of 0.2 mg/dscm with a limit of 1.0 mg/dscm for any individual stack. We conclude that it is feasible for all facilities to fully enclose all process areas under negative pressure of and implement a prescribed list of work practices to limit fugitive emissions. As an alternative, facilities could demonstrate a similar level of control for fugitive emissions by monitoring ambient lead concentrations at or near the facility boundaries to ensure that concentrations remain below the lead NAAQS (i.e., 0.15 $\mu g/m^3$). Implementing these controls would achieve

EPA-R9-2016-005534-0025155

reductions in lead emissions of approximately 13.3 tons with total metal HAP reductions of approximately 15 tons. Additionally, we expect total co-reductions of PM emissions of approximately 160 tons. We estimate that between 48 and 76 tons of the total PM reductions will be reductions in particles with diameters less than 2.5 microns ($PM_{2.5}$), depending on the nature of the particle size distribution of emissions from this source category. For these reasons, we believe that these controls and measures are cost-effective measures that reflect achievable performance for this industry.

EPA-R9-2016-005534-0025156

Appendix F

HB3151-25 Excess Emissions Calculation

APPENDIX F

EXIDE HB 3151-25 EXCESS LEAD EMISSIONS

Quemetco room ventilation baghouse exhaust lead concentrations test data

Baghouse ID	Pb Conc. ug/dscm
A	0.567
B	2.840
C	2.780
D	1.300
E	10.100
F	1.060
G	2.850
H	2.280
I	0.661
Average	**2.715**

Exide Torit dust collector exhaust lead concentrations test data

Collector ID	Pb Conc. ug/dscm
North	8.93
South	9.68
Average	**9.305**

HEPA control efficiency on R2 emissions (E)

E = (1 - 2.715/9.305)*100 = **70.819 Percent**

Excess Pb Emissions (based on test data)

Collector ID	Pb, R2, lbs/hr	Excess Factor	Excess Pb, lbs/hr	Excess Pb, lbs/day
North	0.0029	0.7082	0.0020	**0.0486**
South	0.0042	0.7082	0.0030	**0.0714**
Totals	0.0071		0.0050	**0.1200**

Assumptions: Similar filter media have similar exhaust gas concentrations

Appendix D

Projected Health Risks following all Proposed Measures

Appendix D
Projected Health Risks After Implementing All Proposed Measures

ENVIRON conducted this health risk assessment (HRA) to project future health risks after Exide implements all the proposed control measures presented in the Risk Reduction Plan. Potential future control measures include a Regenerative Thermal Oxidizer (RTO) on the exhaust of the Reverberatory Furnace Feed Dryer and secondary HEPA filters on the Soft Lead, Material Handling, and MAC stacks. ENVIRON used the same air modeling and risk assessment methodologies as described in the approved January 2013 HRA, and substituted the emission data with the projected emissions that account for the RTO and the secondary HEPA filters.

D.1 Projected TAC Emissions

The main text of the RRP discussed the potential control efficiencies of the RTO (i.e., 90% reduction for organics) and the secondary HEPA filters (i.e., 50% reduction for metals). Table D-1 summarizes the TAC emissions using these control efficiencies. The 90% was applied to the organic TAC emissions reported for the Feed Dryer stack in the January 2013 HRA. The 50% was applied to the metal TAC emissions reported in the January 2013 HRA for the Feed Dryer, MAC baghouse, and Material Handling baghouse stacks and the metal TAC emissions in Appendix B for the Soft Lead stack. TAC emissions staying the same as those in the approved January 2013 HRA were not presented. Note that the secondary HEPA filters for the Feed Dryer stack had been installed already. However, the January 2013 HRA did not take any credit for such control.

D.2 Modeling and Risk Assessment Methods

This HRA repeated the risk calculations in the approved January 2013 HRA. Emission sources included all nine stacks of the manufacturing processes and two stacks for the natural gas water heaters as point sources, as well as the area sources representing the onsite entrained road dust. ENVIRON updated the emission data in the approved 2013 HRA with those listed in Table D-1. Entrained paved road dust emissions were revised slightly by using the k factor for PM_{10} instead of PM_{30} (AP-42 Section 13.2.1).

ENVIRON used the same XOQ files that were generated for the approved January 2013 HRA in this updated HRA. The regulatory default options were used to generate the XOQ values using Breeze AERMOD version 7.6 (EPA AERMOD version 12060). The source parameters were based on the source test reports that were used in the approved January 2013 HRA. The receptor grid covers a 3,600-square-kilometer area surrounding the facility, and census block receptors were identified within this area using United States Census Bureau data. ENVIRON obtained the meteorological data for the Central Los Angeles station from AQMD's website for the years of 2006 and 2007. The elevations for the sources and receptors were extracted from the National Elevation Datasets (NED) on the United States Geological Survey's (USGS) website. The modeling used the Universal Transverse Mercator (UTM) system of coordinates and the World Geodetic System 1984 (WGS84) spheroid.

ENVIRON used HARP (version 1.4f) to calculate the health risks, which is the same version that ENVIRON used for the approved January 2013 HRA and the currently available version on the California Air Resources Board (CARB)'s website. An updated HARP Health Value Database was released by CARB on August 1, 2013. This new database contains updated health values for 1,3-butadiene adopted by OEHHA and was used in this updated HRA. The newly adopted values are: 2 $\mu g/m^3$ (chronic REL) and 660 $\mu g/m^3$ (acute REL), compared to the 20 $\mu g/m^3$ (chronic REL) and no acute REL previously.

ENVIRON used the same risk calculation parameters as those in the approved January 2013 HRA, which followed the OEHHA Air Toxics Hot Spots Program Guidance Manual for Preparation of Health Risk Assessment and the SCAQMD's Supplemental Guidelines for Preparing Risk Assessments for the Air Toxics "Hot Spots" Information and Assessment Act.

D.3 Risk Estimates

When the future controls are considered, the cancer risk at the Maximally Exposed Individual Worker (MEIW) is estimated to be 3.7 in a million or 3.7E-6 (vs. 156 in a million in the January 2013 HRA). The MEIW is at Receptor 1005 (389900, 3763600) and is located in the railyard north of the facility. The cancer risk at the Maximally Exposed Individual Resident (MEIR) is estimated to be 1.2 in a million or 1.2E-6 (vs. 22 in a million in the 2013 HRA). The MEIR is at Receptor 1016 (389900, 3764700) and is located in the residential area north of the facility. Both maximum cancer risks are below the AQMD Rule 1402 Action Risk Level of 25 in a million and the public notification threshold of 10 in a million.

The cancer burden is estimated to be 0.005, which is well below the AQMD Rule 1402 Action Risk Level of 0.5. The cancer burden in the January 2013 HRA was 10.

The maximum Chronic Hazard Index (CHI) for the worker scenario is estimated to be 0.4 (vs. 63 in the January 2013 HRA). The maximum CHI MEIW is at the same receptor as the MEIW. The maximum CHI for the residential scenario is estimated to be 0.04 (vs. 2.9 in the 2013 HRA). It is located at the same location as the MEIR. Both maximum CHIs are well below the AQMD Rule 1402 Action Risk Level of 3.0 and the public notification threshold of 1.0.

The maximum Acute Hazard Index (AHI) [i.e. Point of Maximum Impact (PMI)] is estimated to be 0.1 (vs. 3.8 in the January 2013 HRA). It is at Receptor 80 (389659, 3763479) and is located on the western fence line near the railway track. The maximum AHI for the residential scenario is estimated to be 0.008 (vs. 0.2 in the 2013 HRA). It is at the same receptor as the MEIR. The maximum AHIs are well below the AQMD Rule 1402 Action Risk Level of 3.0 and the public notification threshold of 1.0.

The maximum locations for the worker cancer risk, CHI, and AHI and the contour for the worker cancer risk on Figure D-1. The maximum locations for the residential cancer risk, CHI, and AHI and the contour for the residential cancer risk are presented on Figure D-2.

All electronic files, including emissions, modeling, and health risk calculations, are included in the CD-ROM in Appendix E of the RRP.

Tables

Table D-1 Reduced Emissions Following All Proposed Measures
Exide Technologies
Vernon, California

Stack	Chemical	CAS	Hourly Emission (lb/hr)
Material Handling Stack	Antimony	7440360	1.06E-05
Material Handling Stack	Arsenic	7440382	3.71E-05
Material Handling Stack	Beryllium	7440417	0
Material Handling Stack	Cadmium	7440439	2.61E-05
Material Handling Stack	Copper	7440508	1.41E-04
Material Handling Stack	Lead	7439921	5.75E-04
Material Handling Stack	Manganese	7439965	0
Material Handling Stack	Mercury	7439976	7.10E-07
Material Handling Stack	Nickel	7440020	1.98E-05
Material Handling Stack	Phosphorus	7723140	4.17E-04
Material Handling Stack	Selenium	7782492	0
Material Handling Stack	Zinc	7440666	1.12E-04
Material Handling Stack	Chromium VI	18540299	6.80E-06
Soft Lead Stack	Antimony	7440360	2.42E-05
Soft Lead Stack	Arsenic	7440382	4.12E-06
Soft Lead Stack	Beryllium	7440417	8.35E-06
Soft Lead Stack	Cadmium	7440439	1.86E-05
Soft Lead Stack	Copper	7440508	4.53E-06
Soft Lead Stack	Lead	7439921	2.70E-03
Soft Lead Stack	Manganese	7439965	5.70E-06
Soft Lead Stack	Mercury	7439976	5.20E-05
Soft Lead Stack	Nickel	7440020	5.85E-06
Soft Lead Stack	Phosphorus	7723140	2.06E-05
Soft Lead Stack	Selenium	7782492	4.54E-06
Soft Lead Stack	Zinc	7440666	1.60E-04
Soft Lead Stack	Chromium VI	18540299	6.25E-06
Soft Lead Stack	Vanadium	7440622	1.67E-05
Feed Dryer Baghouse/Cyclone	Antimony	7440360	2.15E-05
Feed Dryer Baghouse/Cyclone	Arsenic	7440382	1.33E-05
Feed Dryer Baghouse/Cyclone	Beryllium	7440417	0
Feed Dryer Baghouse/Cyclone	Cadmium	7440439	5.40E-06
Feed Dryer Baghouse/Cyclone	Copper	7440508	7.00E-06
Feed Dryer Baghouse/Cyclone	Lead	7439921	5.25E-03
Feed Dryer Baghouse/Cyclone	Manganese	7439965	5.65E-05
Feed Dryer Baghouse/Cyclone	Mercury	7439976	4.10E-05
Feed Dryer Baghouse/Cyclone	Nickel	7440020	4.75E-06
Feed Dryer Baghouse/Cyclone	Phosphorus	7723140	0
Feed Dryer Baghouse/Cyclone	Selenium	7782492	8.20E-07
Feed Dryer Baghouse/Cyclone	Vanadium	7440622	2.12E-06
Feed Dryer Baghouse/Cyclone	Zinc	7440666	2.12E-05
Feed Dryer Baghouse/Cyclone	Formaldehyde	50000	1.91E-03
Feed Dryer Baghouse/Cyclone	Acetaldehyde	75070	7.92E-04
Feed Dryer Baghouse/Cyclone	Naphthalene	91203	1.34E-03
Feed Dryer Baghouse/Cyclone	Benz(a)anthracene	56553	8.75E-09
Feed Dryer Baghouse/Cyclone	Chrysene	218019	5.21E-07
Feed Dryer Baghouse/Cyclone	Benzo(b)fluoranthene	205992	1.91E-08
Feed Dryer Baghouse/Cyclone	Benzo(k)fluoranthene	207089	0
Feed Dryer Baghouse/Cyclone	Benzo(a)pyrene	50328	0
Feed Dryer Baghouse/Cyclone	Indeno(1,2,3-cd)pyrene	193395	3.06E-09
Feed Dryer Baghouse/Cyclone	Dibenz(a,h)anthracene	53703	0
Feed Dryer Baghouse/Cyclone	TEQ (Min) as 2,3,7,8-TCDD	1086	7.80E-12

Table D-1 Reduced Emissions Following All Proposed Measures
Exide Technologies
Vernon, California

Stack	Chemical	CAS	Hourly Emission (lb/hr)
Feed Dryer Baghouse/Cyclone	Total PCBs	1336363	6.77E-05
Feed Dryer Baghouse/Cyclone	Chromium VI	18540299	1.69E-06
Feed Dryer Baghouse/Cyclone	Benzene	71432	1.88E-02
Feed Dryer Baghouse/Cyclone	Benzyl Chloride	100447	0
Feed Dryer Baghouse/Cyclone	Bromomethane	74839	8.09E-05
Feed Dryer Baghouse/Cyclone	2-Butanone	78933	4.98E-04
Feed Dryer Baghouse/Cyclone	Carbon Disulfide	75150	8.26E-04
Feed Dryer Baghouse/Cyclone	Carbon Tetrachloride	56235	0
Feed Dryer Baghouse/Cyclone	Chlorobenzene	108907	0
Feed Dryer Baghouse/Cyclone	Chloroethane	75003	0
Feed Dryer Baghouse/Cyclone	Chloroform	67663	4.10E-05
Feed Dryer Baghouse/Cyclone	1,1-Dichloroethane	75343	0
Feed Dryer Baghouse/Cyclone	1,1-Dichloroethene	75354	2.85E-05
Feed Dryer Baghouse/Cyclone	1,2-Dibromoethane	106934	0
Feed Dryer Baghouse/Cyclone	1,2-Dichloroethane	107062	0
Feed Dryer Baghouse/Cyclone	1,2-Dichloropropane	78875	0
Feed Dryer Baghouse/Cyclone	1,4-Dichlorobenzene	106467	0
Feed Dryer Baghouse/Cyclone	Ethylbenzene	100414	1.46E-04
Feed Dryer Baghouse/Cyclone	MTBE	1634044	0
Feed Dryer Baghouse/Cyclone	Methylene Chloride	75092	0
Feed Dryer Baghouse/Cyclone	xylene (mixed)	1330207	1.87E-04
Feed Dryer Baghouse/Cyclone	Styrene	100425	4.23E-04
Feed Dryer Baghouse/Cyclone	Tetrachloroethene	127184	0
Feed Dryer Baghouse/Cyclone	Toluene	108883	1.21E-03
Feed Dryer Baghouse/Cyclone	Trichloroethene	79016	4.11E-05
Feed Dryer Baghouse/Cyclone	Trichlorofluoromethane	75694	0
Feed Dryer Baghouse/Cyclone	1,1,2-Trichloro-1,2,2-Trifluoroethan	76131	0
Feed Dryer Baghouse/Cyclone	1,1,1-Trichloroethane	71556	0
Feed Dryer Baghouse/Cyclone	1,1,2-Trichloroethane	79005	0
Feed Dryer Baghouse/Cyclone	1,1,2,2-Tetrachloroethane	79345	0
Feed Dryer Baghouse/Cyclone	Vinyl Acetate	108054	4.29E-04
Feed Dryer Baghouse/Cyclone	Vinyl Chloride	75014	2.80E-05
Feed Dryer Baghouse/Cyclone	1,3-Butadiene	106990	1.67E-03
Feed Dryer Baghouse/Cyclone	1,4-Dioxane	123911	0
MAC Baghouse Stack	Antimony	7440360	1.06E-04
MAC Baghouse Stack	Arsenic	7440382	2.86E-05
MAC Baghouse Stack	Beryllium	7440417	0
MAC Baghouse Stack	Cadmium	7440439	0
MAC Baghouse Stack	Copper	7440508	0
MAC Baghouse Stack	Lead	7439921	2.86E-04
MAC Baghouse Stack	Manganese	7439965	0
MAC Baghouse Stack	Mercury	7439976	6.75E-07
MAC Baghouse Stack	Nickel	7440020	1.35E-05
MAC Baghouse Stack	Phosphorus	7723140	0
MAC Baghouse Stack	Selenium	7782492	0
MAC Baghouse Stack	Zinc	7440666	3.94E-04
MAC Baghouse Stack	Chromium VI	18540299	1.98E-05

Figures

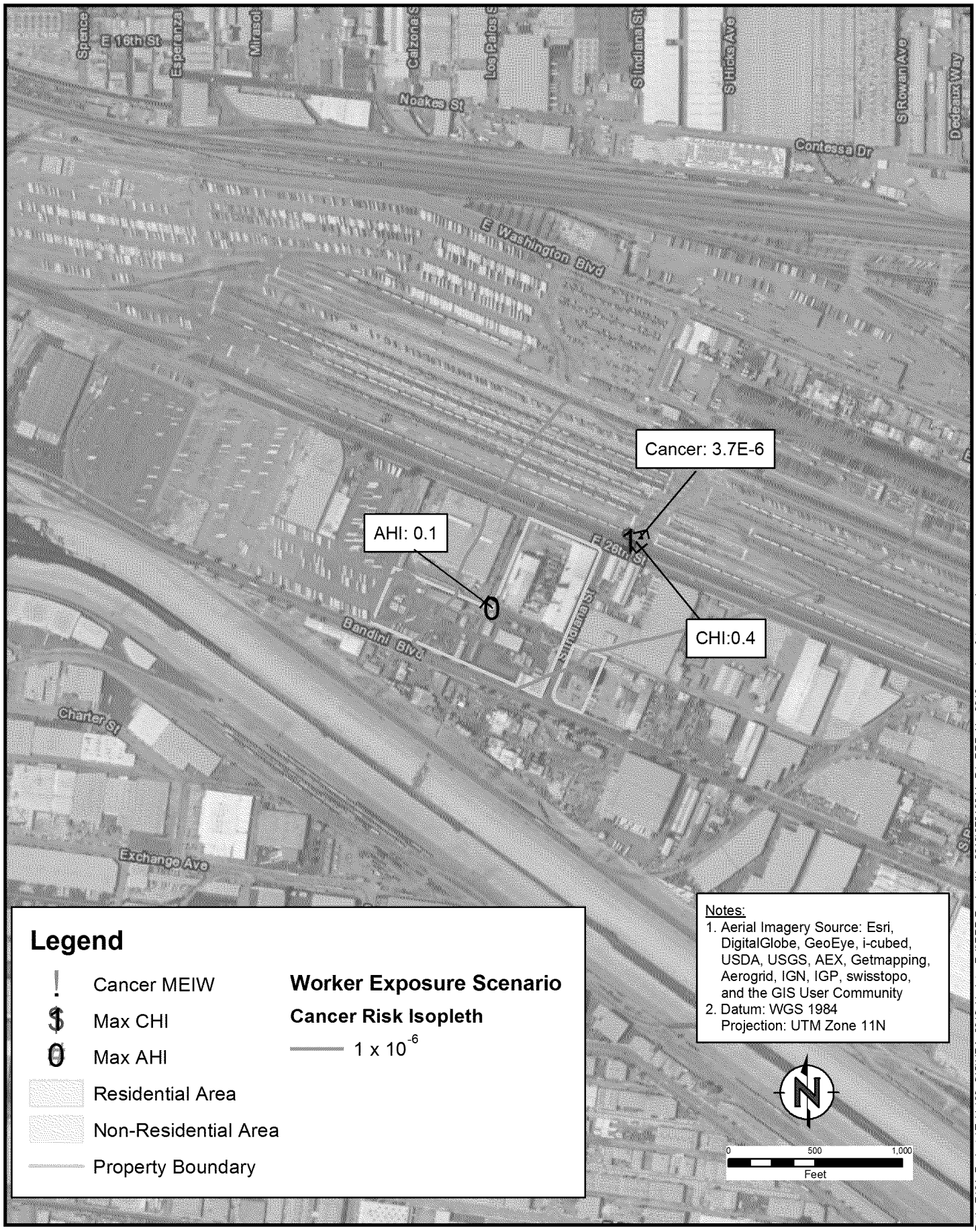

ENVIRON

UPDATED BY: XZLiu/MMG | DATE: 11/20/2013

Worker Exposure Risks Following All Proposed Measures

Exide Technologies
2700 South Indiana Street, Vernon, CA

Figure D-1

PROJECT: 07-21624A

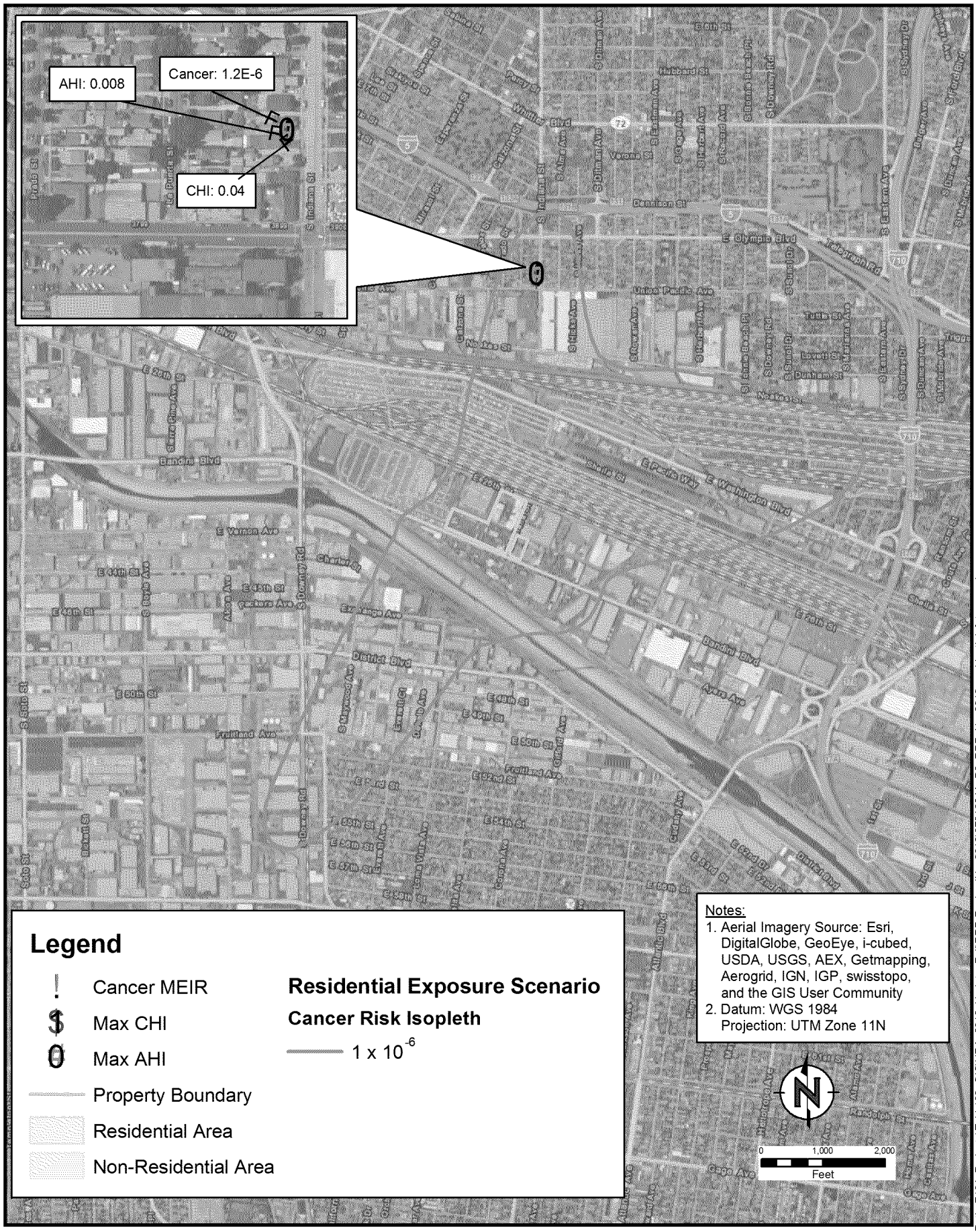

Path: Z:\01_Projects\Exide\03_GIS\HRA_2012_Update_Fall\RRP-RevisedNov2013\0721624A_D2_RRP_Nov2013_residential_future.mxd

ENVIRON

UPDATED BY: XZLiu | DATE: 11/20/2013

Residential Exposure Risks
Following All Proposed Measures

Exide Technologies
2700 South Indiana Street, Vernon, CA

Figure
D-2

PROJECT: 07-21624A

Appendix E

HRA CD-ROM

CD-ROM has already been submitted to AQMD

Appendix E
Description of Submitted Files in CD-ROM

- HARP tra files for Appendix B, B.d, and D
- EXIDE 2012 DISCRETE AND BDRY.SRC: grid and boudnary receptor HARP .src file
- EXIDE 2012 CENSUS.SRC: census receptor HARP .src file
- EXIDE 2012 DISCRETE AND BDRY.XOQ: grid receptor HARP .xoq file
- EXIDE 2012 CENSUS.XOQ: census receptor HARP .xoq file
- project-resident-census.sit: Site-specific parameters used for residential risk modeling scenario
- project-worker-sensitive.sit: Site-specific parameters used for worker risk modeling scenario
- ems files for Appendix B, B.d, and D
- HARP risk reports for Appendix B, B.d, and D

EPA-R9-2016-005534-0025169

ATTACHMENT A

No.	REVISION	By	Date
B	Added Man Door	MB	3/3/14

LEAKAGE POINTS

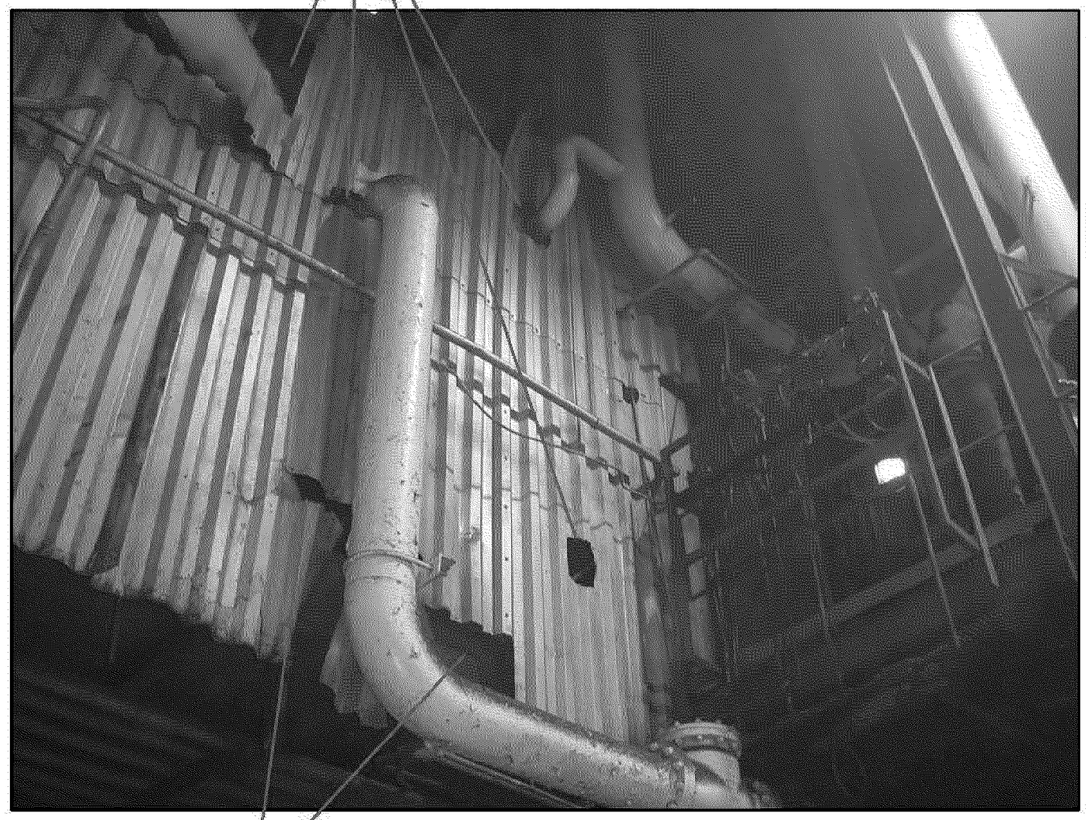

LEAKAGE POINTS

EXISTING

SEAL PENETRATION POINTS

PROPOSED

MAN DOOR

REPLACE CORRUGATED METAL
WITH 14GA A-36 C.S.
SCREW TO EXISTING FRAME USING
HIGH TEMP SILICONE AT EA SEAM

BLAST FURNACE ENCLOSURE

This material is the property of INDUSTRIAL ACCESSORIES COMPANY and should not be reproduced, published or disclosed to others without authorization. This material shall not be used to say any contract or subcontract is INDUSTRIAL ACCESSORIES COMPANY, Wheeling, Illinois.

IAC Industrial Accessories Company
4000 Lexan
Wheeling, Illinois 60090
(847) 394-0011 fax (847) 394-0077

EXIDE TECHNOLOGIES VERNON, CA		MB	02/19/14
	1		
		13201	
BLAST FURNACE ENCLOSURE PROPOSAL		BF-1-1907-1A Sht 1 of 1	B

ATTACHMENT B

No.	REVISION	By	Date
	–	–	

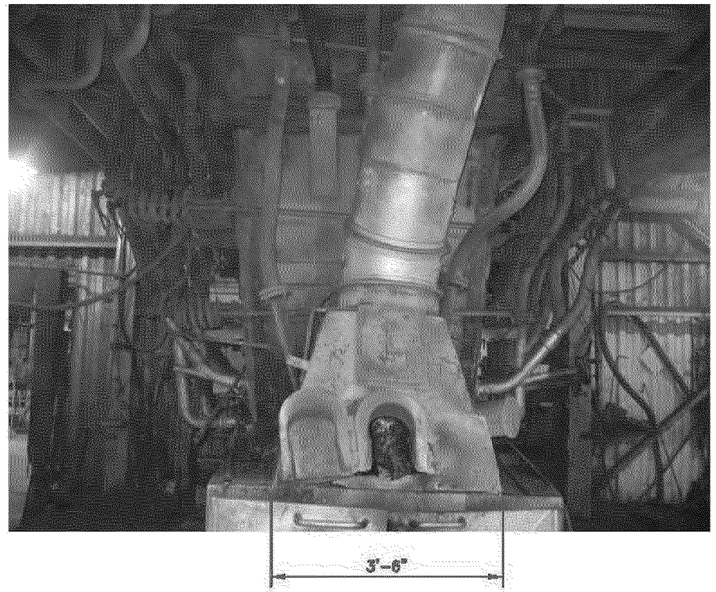

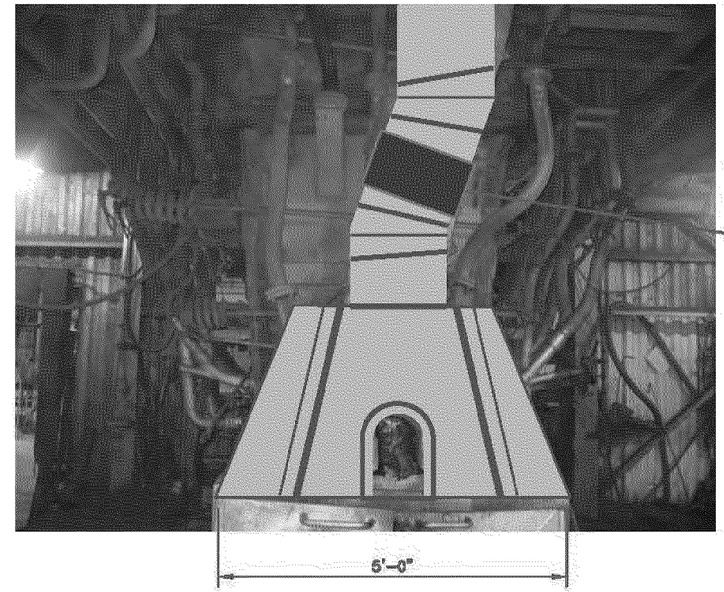

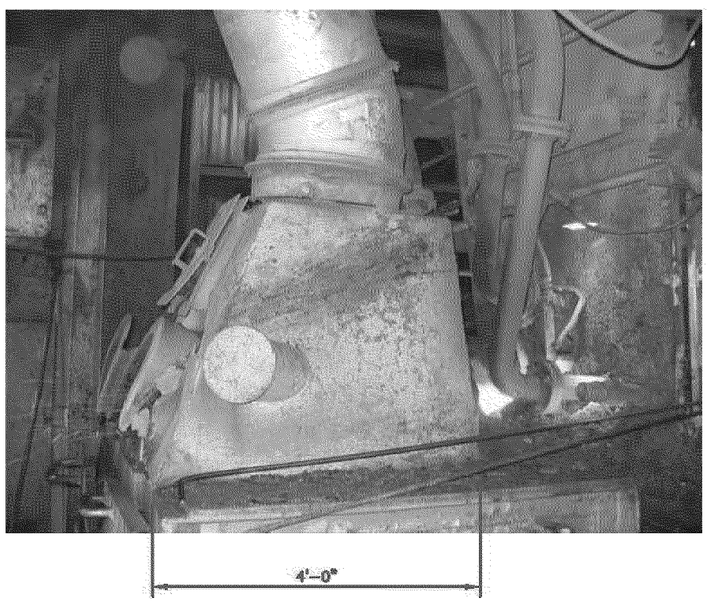

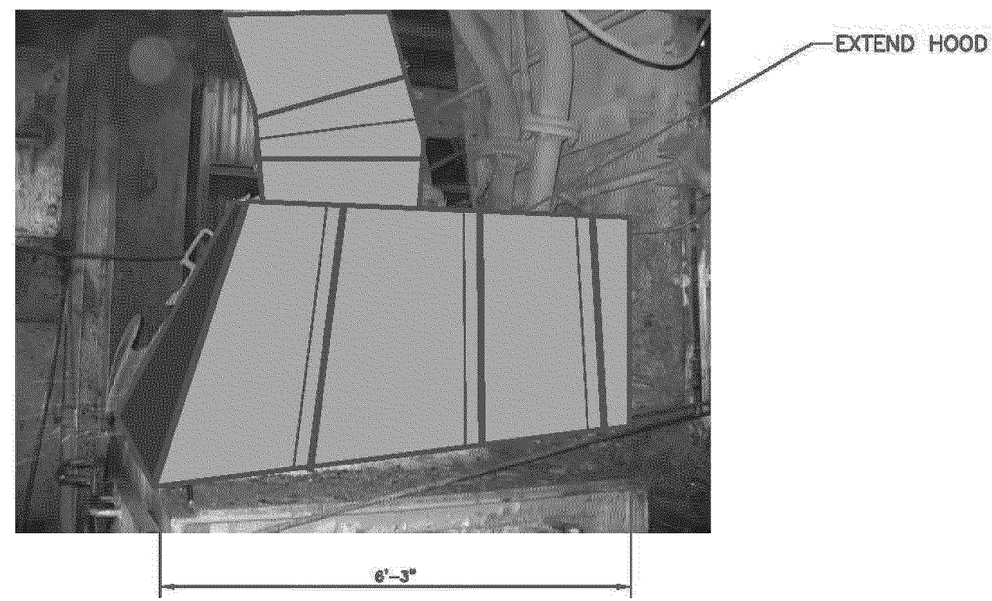

EXISTING

PROPOSED

SLAG TAP HOOD

This material is the property of INDUSTRIAL ACCESSORIES COMPANY and should not be reproduced, published or disclosed to others without authorization. This material shall not be used in any way either in whole or in part to injure INDUSTRIAL ACCESSORIES COMPANY, Wheaton, Illinois.

IAC Industrial Accessories Company
4000 Lapham
Wheaton, Illinois 60187
(312) 384-0511 fax (312) 384-0577

EXIDE TECHNOLOGIES VERNON, CA		MB	02/19/14
	1	13001	
SLAG TAP HOOD PROPOSAL		EX-1-1907-2 Sht 1 of 1	B

ATTACHMENT C

No.	REVISION	By	Date
G	ADDED RTO, CARTRIDGE FILTER, & FAN FOR CHARGE HOODS	DAY	7/30/14

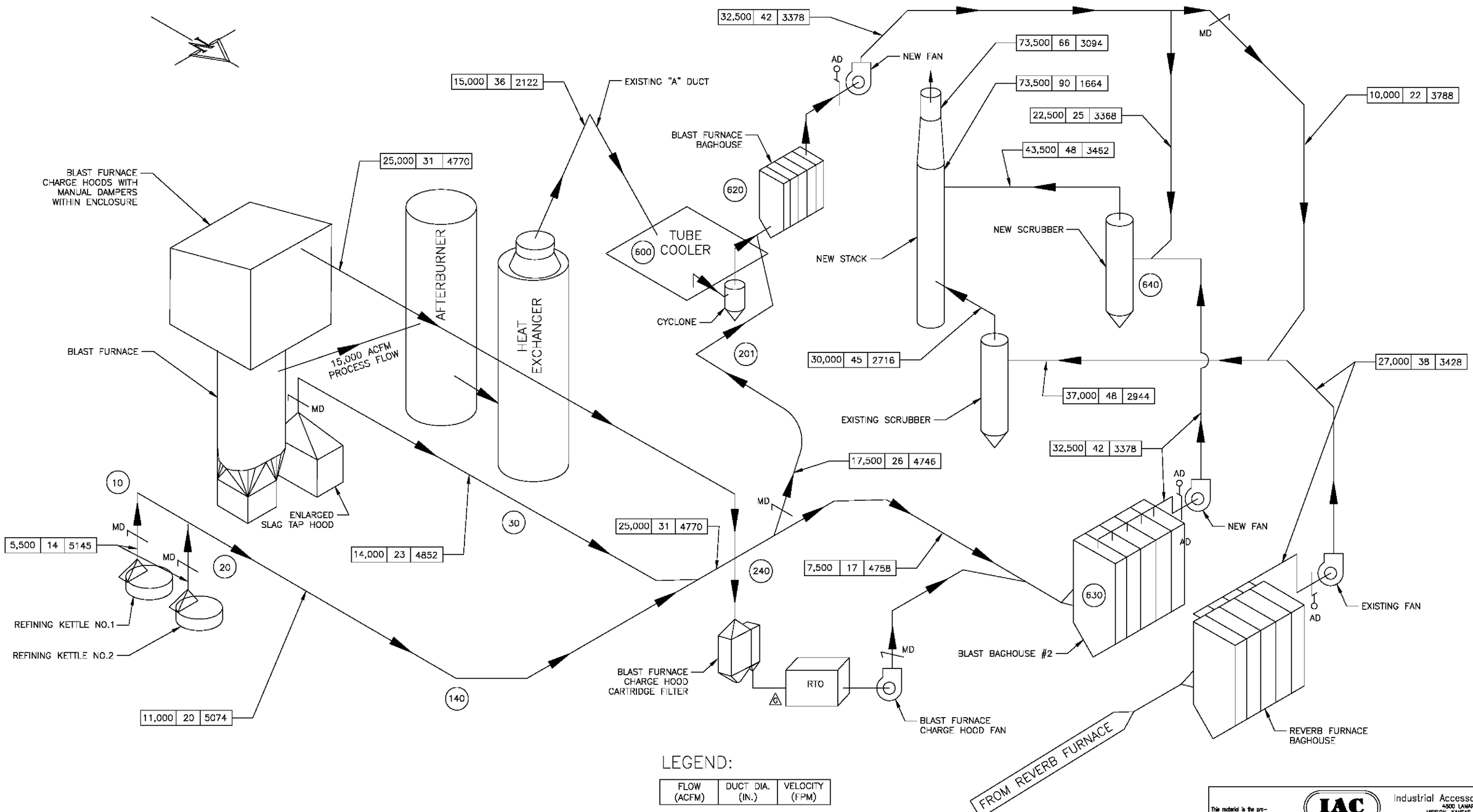

LEGEND:

FLOW (ACFM)	DUCT DIA. (IN.)	VELOCITY (FPM)

NOTE: CIRCLED NUMBERS REFER TO DUCT ID NUMBERS IN STATIC PRESSURE CALCULATIONS.

MD = MANUAL DAMPER
AD = AUTOMATED DAMPER

This material is the property of INDUSTRIAL ACCESSORIES COMPANY and should not be reproduced, published or disclosed to others without authorization. The material shall not be used in any way against or detrimental to INDUSTRIAL ACCESSORIES COMPANY, Mission, Kansas.

IAC
Industrial Accessories Company
4500 LAMAR
MISSION, KANSAS 66202
(913) 384-5511 fax (913) 384-6577

CUSTOMER: EXIDE TECHNOLOGIES
VERNON, CA
CUSTOMER P.O.: ---
QTY.: 1
DESCRIPTION: RISK REDUCTION PLAN PROPOSAL
DRAWN: MB
DATE: 02/19/14
SCALE: NONE
PART NO.: -
REQ.:
JOB NO.: 13201
CHK'D:
APP'D:
DRAWING NO.: BF-1-1907-3
Sht 1 of 1
REV.: G

Exide Technologies, Vernon, CA
APC Risk Reduction Plan
IAC Job #E13201

APC Airflow Calculation Summary

Blast Furnace Process Flow				Flow from Auxiliary Hoods				Reverb Furnace Process Flow			
Vent Point	Description	ACFM	Note	Vent Point	Description	ACFM	Note	Vent Point	Description	ACFM	Note
1	Blast Furnace Process Flow	15,000	1	2	Refining Kettle No. 1	5,500	1	6	Reverb Furnace Process Flow	27,000	1
				3	Refining Kettle No. 2	5,500	1				
				4	Blast Furnace Slag Tap Hood	14,000	2				
					Subtotal	25,000					
	Flow Diverted from VPs 2, 3 & 4	17,500			Flow Diverted to Blast BH #1	-17,500					
					Subtotal	7,500					
				5	Blast Furnace Charge Hoods	25,000	3				
	Blast Baghouse #1	32,500	4		Blast Baghouse #2	32,500	4		Reverb Furnace Baghouse	27,000	5
	Flow Diverted to Existing Scrubber	-10,000							Flow from Blast Baghouse #1	10,000	
	Flow to New Scrubber	22,500			Flow from Blast Baghouse #1	22,500					
					Flow to New Scrubber	55,000			Flow to Existing Scrubber	37,000	
					Flow from New Scrubber	43,500	6		Flow from Existing Scrubber	30,000	6
					Flow from New Scrubber	43,500					
					Flow from Existing Scrubber	30,000					
					New 66" Diameter Stack	73,500	7				

Notes

1. Flow matches current design flow.
2. This flow is a 17% increase over the existing design flow.
3. This flow is the total for the 4 existing hoods above the furnace, which creates >200 fpm upward capture velocity within the furnace enclosure after enclosure containment is improved. Velocity = 25,000 acfm/[(15'-0" x 10'-9" open area) - (6'-6" x 9'-6" furnace area)] = 250 fpm
4. Air-to-cloth ratio = 32,500 acfm/26,390 ft2 = 1.2
5. Air-to-cloth ratio = 27,000 acfm/26,390 ft2 = 1.0
6. Flow from scrubber reduced due to decrease in flow temperature
7. Stack Exit Velocity = 73,500 acfm/[(5.5 ft)^{2}π/4] = 3,094 fpm

South Coast Air Quality Management District

Form 400-A
Application Form for Permit or Plan Approval

List only one piece of equipment or process per form.

Mail To:
SCAQMD
P.O. Box 4944
Diamond Bar, CA 91765-0944
Tel: (909) 396-3385
www.aqmd.gov

Section A - Operator Information

1. Facility Name (Business Name of Operator to Appear on the Permit): Exide Technologies

2. Valid AQMD Facility ID (Available On Permit Or Invoice Issued By AQMD): 124838

3. Owner's Business Name (If different from Business Name of Operator):

Section B - Equipment Location Address

4. Equipment Location Is: (●) Fixed Location ( ) Various Location
(For equipment operated at various locations, provide address of initial site.)

Street Address: 2700 S. Indiana Street
City: Vernon, CA Zip: 90058
Contact Name: Ed Mopas Title: Environmental Manager
Phone #: (323) 262-1101 Ext. 259 Fax #: (323) 262-0642
E-Mail: ed.mopas@exide.com

Section C - Permit Mailing Address

5. Permit and Correspondence Information:
[X] Check here if same as equipment location address

Address: 2700 S. Indiana Street
City: Vernon State: CA Zip: 90058
Contact Name: Ed Mopas Title: Environmental Manager
Phone #: (323) 262-1101 Ext. 259 Fax #: (323) 262-0642
E-Mail: ed.mopas@exide.com

Section D - Application Type

6. The Facility Is: ( ) Not In RECLAIM or Title V ( ) In RECLAIM ( ) In Title V (●) In RECLAIM & Title V Programs

7. Reason for Submitting Application (Select only ONE):

7a. New Equipment or Process Application:
- ( ) New Construction (Permit to Construct)
- ( ) Equipment On-Site But Not Constructed or Operational
- ( ) Equipment Operating Without A Permit *
- ( ) Compliance Plan
- ( ) Registration/Certification
- ( ) Streamlined Standard Permit

7b. Facility Permits:
- ( ) Title V Application or Amendment (Refer to Title V Matrix)
- (●) RECLAIM Facility Permit Amendment

7c. Equipment or Process with an Existing/Previous Application or Permit:
- ( ) Administrative Change
- ( ) Alteration/Modification
- ( ) Alteration/Modification without Prior Approval *
- ( ) Change of Condition
- ( ) Change of Condition without Prior Approval *
- ( ) Change of Location
- ( ) Change of Location without Prior Approval *
- ( ) Equipment Operating with an Expired/Inactive Permit *

Existing or Previous Permit/Application
If you checked any of the items in 7c., you MUST provide an existing Permit or Application Number:

* A Higher Permit Processing Fee and additional Annual Operating Fees (up to 3 full years) may apply (Rule 301(c)(1)(D)(i)).

8a. Estimated Start Date of Construction (mm/dd/yyyy): 09/01/2014
8b. Estimated End Date of Construction (mm/dd/yyyy): 10/15/2014
8c. Estimated Start Date of Operation (mm/dd/yyyy): 10/15/2014

9. Description of Equipment or Reason for Compliance Plan (list applicable rule): RECLAIM/TITLE V FACILITY PERMIT AMENDMENT

10. For identical equipment, how many additional applications are being submitted with this application? (Form 400-A required for each equipment / process): 0

11. Are you a Small Business as per AQMD's Rule 102 definition? (10 employees or less and total gross receipts are $500,000 or less OR a not-for-profit training center) (●) No ( ) Yes

12. Has a Notice of Violation (NOV) or a Notice to Comply (NC) been issued for this equipment? (●) No ( ) Yes
If Yes, provide NOV/NC#:

Section E - Facility Business Information

13. What type of business is being conducted at this equipment location? Secondary lead smelter

14. What is your business primary NAICS Code? (North American Industrial Classification System): 331492

15. Are there other facilities in the SCAQMD jurisdiction operated by the same operator? ( ) No (●) Yes

16. Are there any schools (K-12) within 1000 feet of the facility property line? (●) No ( ) Yes

Section F - Authorization/Signature

I hereby certify that all information contained herein and information submitted with this application are true and correct.

17. Signature of Responsible Official: H. Hogarth

18. Title of Responsible Official: Plant Manager

19. I wish to review the permit prior to issuance. (This may cause a delay in the application process.) ( ) No ( ) Yes

20. Print Name: John Hogarth

21. Date: 4/10/14

22. Do you claim confidentiality of data? (If Yes, see instructions.) ( ) No ( ) Yes

23. Check List: [X] Authorized Signature/Date [X] Form 400-CEQA [X] Supplemental Form(s) (ie., Form 400-E-xx) [X] Fees Enclosed

AQMD USE ONLY	APPLICATION TRACKING#	CHECK #	AMOUNT RECEIVED	PAYMENT TRACKING #	VALIDATION
	562500	6057075	$ 50056.73	114910	4/10/14

DATE	APP REJ	DATE	APP REJ	CLASS I III	BASIC CONTROL	EQUIPMENT CATEGORY CODE	TEAM	ENGINEER	REASON/ACTION TAKEN
							A		

© South Coast Air Quality Management District, Form 400-A (2012.07)

3/18

South Coast Air Quality Management District

Form 500-A2
Title V Application Certification

Mail To:
SCAQMD
P.O. Box 4944
Diamond Bar, CA 91765-0944
Tel: (909) 396-3385
www.aqmd.gov

Section I - Operator Information

1. **Facility Name** (Business Name of Operator That Appears On Permit): Exide Technologies

2. **Valid AQMD Facility ID** (Available On Permit Or Invoice Issued By AQMD): 124838

3. **This Certification is submitted with a** (Check one):
   - a. ⦿ Title V Application (Initial, Revision or Renewal)
   - b. ○ Supplement/Correction to a Title V Application
   - c. ○ MACT Part 1

4. **Is Form 500-C2 included with this Certification?** ○ Yes ⦿ No

Section II - Responsible Official Certification Statement

*Read each statement carefully and check each that applies – **You must check 3a or 3b.***

1. **For Initial, Permit Renewal, and Administrative Application Certifications:**
   - a. ○ The facility, including equipment that are exempt from written permit per Rule 219, is currently operating and will continue to operate in compliance with all applicable requirement(s) identified in Section II and Section III of Form 500-C1,
     - i. ☐ except for those requirements that do not specifically pertain to such devices or equipment and that have been identified as "Remove" on Section III of Form 500-C1.
     - ii. ☐ except for those devices or equipment that have been identified on the completed and attached Form 500-C2 that will not be operating in compliance with the specified applicable requirement(s).
   - b. ⦿ The facility, including equipment that are exempt from written permit per Rule 219, will meet in a timely manner, all applicable requirements with future effective dates.
2. **For Permit Revision Application Certifications:**
   - a. ☑ The equipment or devices to which this permit revision applies, will in a timely manner comply with all applicable requirements identified in Section II and Section III of Form 500-C1.
3. **For MACT Hammer Certifications:**
   - a. ○ The facility is subject to Section 112(j) of the Clean Air Act (Subpart B of 40 CFR part 63), also known as the MACT "hammer." The following information is submitted with a Title V application to comply with the Part 1 requirements of Section 112(j).
   - b. ⦿ The facility is not subject to Section 112(j) of the Clean Air Act (Subpart B of 40 CFR part 63).

Section III - Authorization/Signature

I certify under penalty of law that I am the responsible official for this facility as defined in AQMD Regulation XXX and that based on information and belief formed after reasonable inquiry, the statement and information in this document and in all attached application forms and other materials are true, accurate, and complete.

1. Signature of Responsible Official: Hogarth	2. Title of Responsible Official: Plant Manager
3. Print Name: John Hogarth	4. Date: 4/10/14.
5. Phone #: (323) 262-1101	6. Fax #: (323) 269-1906

7. Address of Responsible Official:

Street #	City	State	Zip
2700 South Indiana Street	Vernon	CA	90058

Acid Rain Facilities Only: Please Complete Section IV

© South Coast Air Quality Management District, Form 500-A2 (2009.04)

South Coast Air Quality Management District

Form 500-C1

Title V Compliance Status Report

To provide the compliance status of your facility with applicable federally enforceable requirements and identify other local-only requirements, complete this form and attach it to a completed compliance certification Form 500-A2. As appropriate, all submittals of Form 500-C2 as appropriate should also be attached to this form.

Mail To:
SCAQMD
P.O. Box 4944
Diamond Bar, CA 91765-0944

Tel: (909) 396-3385
www.aqmd.gov

Section I - Operator Information

1. Facility Name (Business Name of Operator That Appears On Permit): Exide Technologies

2. Valid AQMD Facility ID (Available On Permit Or Invoice Issued By AQMD): 124838

PROCEDURES FOR DETERMINING COMPLIANCE STATUS

1. **Equipment verification:** Review the list of pending applications, and either the preliminary Title V facility permit or the list of current permits to operate that the AQMD provided you, to determine if they completely and accurately describe all equipment operating at the facility. Attach a statement to describe any discrepancies.
2. **Identify applicable requirements*:** Use the checklist in Section II to identify all applicable and federally-enforceable local, state, and federal rules and regulations, test methods, and monitoring, recordkeeping and reporting (MRR) requirements that apply to any equipment or process (including equipment exempt from a permit by Rule 219) at your facility.
   The potential applicable requirements, test methods and MRR requirements are identified and listed adjacent to each given equipment/process description. Check off each box adjacent to the corresponding requirement as it applies to your particular equipment/process.
   Note: Even if there is only one piece of equipment that is subject to a particular requirement, the appropriate box should be checked.
3. **Identify additional applicable requirements*:** Use Section III to identify any additional requirements not found in Section II. Section II is not a complete list of all applicable requirements. It does not include recently adopted NESHAP regulations by EPA or recent amendments to AQMD rules. Do not add rules listed in Section V here.
4. **Identify any requirements that do not apply to a specific piece of equipment or process:** Also use Section III to identify any requirements that are listed in Section II but that do not apply to a specific piece of equipment or process. Fill out Section III of this form and attach a separate sheet to explain the reason(s) why the identified rules do not apply. Note: Listing any requirement that does not apply to a specific piece of equipment will not provide the facility with a permit shield unless one is specifically requested by completing Form 500-D and is approved by AQMD.
5. **Identify SIP-approved rules that are not current AQMD rules:** Use Section IV to identify older versions of current AQMD rules that are the EPA-approved versions in the State Implementation Plan (SIP), and that are still applicable requirements as defined by EPA. The facility is not required to certify compliance with the items checked in Section IV provided that the non-SIP approved rule in Section II is at least as stringent as the older SIP-approved version in Section IV. **
6. **Identify Local-Only Enforceable Regulatory Requirements:** Use Section V to identify AQMD rules that are not SIP-approved and are not federally enforceable.
7. **Determine compliance:** Determine if all equipment and processes are complying with all requirements identified in Sections II and III. If each piece of equipment complies with all applicable requirements, complete and attach Form 500-A2 to certify the compliance status of the facility. If any piece of equipment is not in compliance with any of the applicable requirements, complete and attach Form 500-C2 in addition to Form 500-A2.

* The following AQMD rules and regulations are not required to be included in Section II and do not have to be added to Section III: Regulation I, List and Criteria in Regulation II, Rule 201, Rule 201.1, Rule 202, Rule 203, Rule 205, Rule 206, Rule 207, Rule 208, Rule 209, Rule 210, Rule 212, Rule 214, Rule 215, Rule 216, Rule 217, Rule 219, Rule 220, Rule 221, Regulation III, Regulation V, Regulation VIII, Regulation XII, Regulation XV, Regulation XVI, Regulation XIX, Regulation XXI, Regulation XXII, and Regulation XXX.

** Emission units adversely affected by the gap between current and SIP-approved versions of rules may initially be placed in a non-Title V portion of the permit

© South Coast Air Quality Management District, Form 500-C1 (2011.02)

Section II - Applicable Requirements, Test Methods, & MRR Requirements			
Equipment/Process	**Applicable Requirement**	**Test Method**	**MRR Requirement**
☐ All Air Pollution Control Equipment Using Combustion (RECLAIM & non-RECLAIM sources)	☐ Rule 480 (10/07/77)	N/A	N/A
☑ All Coating Operations (12/15/00)	☑ Rule 442	☑ Rule 442(f)	☑ Rule 442(g)
☐ All Combustion Equipment, ≥ 555 Mmbtu/Hr (except for NOx RECLAIM sources)	☐ Rule 474 (12/04/81)	☐ AQMD TM 7.1 or 100.1	
☑ All Combustion Equipment Except Internal Combustion Engines (RECLAIM & non-RECLAIM sources)	☑ Rule 407 (04/02/82) ☑ Rule 409 (08/07/81)	☑ AQMD TM 100.1 or 10.1, 307-91 ☑ AQMD TM 5.1, 5.2, or 5.3	
☐ All Combustion Equipment Using Gaseous Fuel (except SOx RECLAIM sources)	☐ Rule 431.1 (06/12/98)	☐ Rule 431.1(f)	☐ Rule 431.1(d) & (e)
☐ All Combustion Equipment Using Liquid Fuel (except SOx RECLAIM sources)	☐ Rule 431.2 (09/15/00)	☐ Rule 431.2(g)	☐ Rule 431.2(f)
☐ All Combustion Equipment Using Fossil Fuel (except SOx RECLAIM sources)	☐ Rule 431.3 (05/07/76)		
☑ All Equipment	☑ Rule 401 (11/09/01) ☑ Rule 405 (02/07/86) ☑ Rule 408 (05/07/76) ☑ Rule 430 (07/12/96) ☑ Rule 701 (05/13/97) ☑ New Source Review, BACT ☐ Rule 1703 (10/07/88) ☐ 40 CFR68 - Accidental Release Prevention	☑ California Air Resources Board Visible Emission Evaluation ☑ AQMD TM 5.1, 5.2, or 5.3 N/A See Applicable Subpart	☑ Rule 430(b) See Applicable Subpart
☐ All Equipment Processing Solid Materials	☐ Rule 403 (06/03/05)	☐ Rule 403(d)(3)	☐ Rule 403(f)
☑ All Equipment With Exhaust Stack (except cement kilns subject to Rule 1112.1)	☑ Rule 404 (02/07/86)	☑ AQMD TM 5.1, 5.2, or 5.3	
☑ All Facilities Using Solvents to Clean Various Items or Equipment	☑ Rule 109 (05/02/03) ☑ Rule 1171 (05/01/09) ☐ 40 CFR63 SUBPART T	☑ Rule 109(g) ☑ Rule 1171(e) See Applicable Subpart	☑ Rule 109(c) ☑ Rule 1171(c)(6) See Applicable Subpart
☑ All RECLAIM Equipment (NOx & SOx)	☑ Reg. XX - RECLAIM	☑ Rule 2011, App. A (05/06/05) ☑ Rule 2012, App. A (05/06/05)	☑ Rule 2011, App. A (05/06/05) ☑ Rule 2012, App. A (05/06/05)
☐ Abrasive Blasting	☐ Rule 1140 (08/02/85)	☐ Rule 1140(d) & (e), AQMD Visible Emission Method	

KEY ABBREVIATIONS:	Reg. = AQMD Regulation Rule = AQMD Rule	App. = Appendix AQMD TM = AQMD Test Method	CFR = Code of Federal Regulations CCR = California Code of Regulations

© South Coast Air Quality Management District, Form 500-C1 (2011.02)

Section II - Applicable Requirements, Test Methods, & MRR Requirements			
Equipment/Process	**Applicable Requirement**	**Test Method**	**MRR Requirement**
☐ Aggregate and Related Operations	☐ Rule 1157 (09/08/06)	☐ Rule 1157(f)	☐ Rule 1157(e)
☑ Appliances Containing Ozone Depleting Substances (except Motor Vehicle Air Conditioners): Manufacturing, Repair, Maintenance, Service, & Disposal	☑ 40 CFR82 SUBPART F	See Applicable Subpart	See Applicable Subpart
☐ Asphalt	See Manufacturing, Asphalt Processing & Asphalt Roofing		
☐ Asphalt Concrete/Batch Plants	☐ 40 CFR60 SUBPART I	See Applicable Subpart	See Applicable Subpart
☐ Benzene Emissions, Maleic Anhydride Plants, Ethylbenzene/Styrene Plants, Benzene Storage Vessels, Benzene Equipment Leaks, & Coke By-Product Recovery Plants	☐ Rule 1173 (02/06/09) ☐ Rule 1176 (09/13/96) ☐ 40 CFR61 SUBPART L ☐ 40 CFR61 SUBPART Y ☐ 40 CFR63 SUBPART R ☐ 40 CFR63 SUBPART CC	☐ Rule 1173(j) ☐ Rule 1176(h) See Applicable Subpart See Applicable Subpart See Applicable Subpart See Applicable Subpart	☐ Rule 1173(i) ☐ Rule 1176(f) & (g) See Applicable Subpart See Applicable Subpart See Applicable Subpart See Applicable Subpart
☐ Benzene Transfer Operations	☐ Rule 1142 (07/19/91) ☐ 40 CFR61 SUBPART BB ☐ 40 CFR63 SUBPART Y	☐ Rule 1142(e) See Applicable Subpart See Applicable Subpart	☐ Rule 1142(h) See Applicable Subpart See Applicable Subpart
☐ Benzene Waste Operations	☐ Rule 1176 (09/13/96) ☐ 40 CFR61 SUBPART FF ☐ 40 CFR63 SUBPART CC	☐ Rule 1176(h) See Applicable Subpart See Applicable Subpart	☐ Rule 1176(f) & (g) See Applicable Subpart See Applicable Subpart
☐ Beryllium Emissions	☐ 40 CFR61 SUBPART C	See Applicable Subpart	See Applicable Subpart
☐ Beryllium Emissions, Rocket Motor Firing	☐ 40 CFR61 SUBPART D	See Applicable Subpart	See Applicable Subpart
☐ Boiler, < 5 Mmbtu/Hr (non-RECLAIM sources)	☐ Rule 1146.1 (09/05/08) ☐ Rule 1146.2 (05/05/06) ☐ 40 CFR63 SUBPART DDDDD	☐ Rule 1146.1(d) N/A See Applicable Subpart	☐ Rule 1146.1(c)(2) & (c)(3) N/A See Applicable Subpart
☐ Boiler, < 5 Mmbtu/Hr (RECLAIM sources)	☐ Rule 1146.1 (09/05/08) - excluding NOx requirements ☐ 40 CFR63 SUBPART DDDDD	☐ Rule 1146.1(d) See Applicable Subpart	☐ Rule 1146.1(c)(2) & (c)(3) See Applicable Subpart

KEY ABBREVIATIONS:	Reg. = AQMD Regulation Rule = AQMD Rule	App. = Appendix AQMD TM = AQMD Test Method	CFR = Code of Federal Regulations CCR = California Code of Regulations

© South Coast Air Quality Management District, Form 500-C1 (2011.02)

Section II - Applicable Requirements, Test Methods, & MRR Requirements

Equipment/Process	Applicable Requirement	Test Method	MRR Requirement
☐ Boiler, ≥ 5 Mmbtu/Hr (non-RECLAIM sources)	☐ Rule 218 (05/14/99)	☐ AQMD TM 100.1	☐ Rule 218(e) & (f)
	☐ Rule 429 (12/21/90)	N/A	☐ Rule 429(d)
	☐ Rule 475 (08/07/78)	☐ AQMD TM 5.1, 5.2, or 5.3	
	☐ Rule 476 (10/08/76)	☐ AQMD TM 7.1, 100.1, 5.1, 5.2, or 5.3	
	☐ Rule 1146 (09/05/08)	☐ Rule 1146(d)	☐ Rule 1146(c)(6) & (c)(7)
	☐ 40 CFR60 SUBPART D	See Applicable Subpart	See Applicable Subpart
	☐ 40 CFR60 SUBPART Da	See Applicable Subpart	See Applicable Subpart
	☐ 40 CFR60 SUBPART Dc	See Applicable Subpart	See Applicable Subpart
	☐ 40 CFR63 SUBPART DDDDD	See Applicable Subpart	See Applicable Subpart
☐ Boiler, ≥ 5 Mmbtu/Hr (RECLAIM sources)	☐ Rule 475 (08/07/78)	☐ AQMD TM 5.1, 5.2, or 5.3	
	☐ Rule 476 (10/08/76) - excluding NOx requirements	☐ AQMD TM 7.1, 100.1, 5.1, 5.2, or 5.3	
	☐ Rule 1146 (09/05/08) - excluding NOx requirements	☐ Rule 1146(d)	☐ Rule 1146(c)(6) & (c)(7)
	☐ Rule 2011 (05/06/05)	☐ Rule 2011, App. A (05/06/05)	☐ Rule 2011, App. A (05/06/05)
	or	or	or
	☐ Rule 2012 (05/06/05)	☐ Rule 2012, App. A (05/06/05)	☐ Rule 2012, App. A (05/06/05)
	☐ 40 CFR60 SUBPART D	See Applicable Subpart	See Applicable Subpart
	☐ 40 CFR60 SUBPART Da	See Applicable Subpart	See Applicable Subpart
	☐ 40 CFR60 SUBPART Dc	See Applicable Subpart	See Applicable Subpart
	☐ 40 CFR63 SUBPART DDDDD	See Applicable Subpart	See Applicable Subpart
☐ Boiler, Petroleum Refining (non-RECLAIM sources)	☐ Rule 218 (05/14/99)	☐ AQMD TM 100.1	☐ Rule 218(e) & (f)
	☐ Rule 429 (12/21/90)	N/A	☐ Rule 429(d)
	☐ Rule 431.1 (06/12/98)	☐ Rule 431.1(f)	☐ Rule 431.1(d) & (e)
	☐ Rule 475 (08/07/78)	☐ AQMD TM 5.1, 5.2, or 5.3	
	☐ Rule 1146 (09/05/08)	☐ Rule 1146(d)	☐ Rule 1146(c)(6) & (c)(7)
	☐ 40 CFR60 SUBBPART J	See Applicable Subpart	See Applicable Subpart
	☐ 40 CFR63 SUBPART DDDDD	See Applicable Subpart	See Applicable Subpart

KEY ABBREVIATIONS: **Reg.** = AQMD Regulation; **Rule** = AQMD Rule; **App.** = Appendix; **AQMD TM** = AQMD Test Method; **CFR** = Code of Federal Regulations; **CCR** = California Code of Regulations

© South Coast Air Quality Management District, Form 500-C1 (2011.02)

Section II - Applicable Requirements, Test Methods, & MRR Requirements			
Equipment/Process	**Applicable Requirement**	**Test Method**	**MRR Requirement**
☐ Boiler, Petroleum Refining (RECLAIM sources)	☐ Rule 1146 (09/05/08) - excluding NOx requirements ☐ Rule 2011 (05/06/05) ☐ or Rule 2012 (05/06/05) ☐ 40 CFR60 SUBPART J ☐ 40 CFR63 SUBPART DDDDD	☐ Rule 1146(d) ☐ Rule 2011, App. A (05/06/05) ☐ or Rule 2012, App. A (05/06/05) See Applicable Subpart See Applicable Subpart	☐ Rule 1146(c)(6) & (c)(7) ☐ Rule 2011, App. A (05/06/05) ☐ or Rule 2012, App. A (05/06/05) See Applicable Subpart See Applicable Subpart
☐ Boilers, Electric Utility (non-RECLAIM sources)	☐ Rule 218 (05/14/99) ☐ Rule 429 (12/21/90) ☐ Rule 1135 (07/19/91) ☐ 40 CFR60 SUBPART Db ☐ 40 CFR63 SUBPART DDDDD	☐ AQMD TM 100.1 N/A ☐ Rule 1135(e) See Applicable Subpart See Applicable Subpart	☐ Rule 218(e) & (f) ☐ Rule 429(d) ☐ Rule 1135(e) See Applicable Subpart See Applicable Subpart
☐ Boilers, Electric Utility (RECLAIM sources)	☐ Rule 2012 (05/06/05) ☐ 40 CFR60 SUBPART Db ☐ 40 CFR63 SUBPART DDDDD	☐ Rule 2012, App. A (05/06/05) See Applicable Subpart See Applicable Subpart	☐ Rule 2012, App. A (05/06/05) See Applicable Subpart See Applicable Subpart
☐ Bulk Loading Of Organic Liquids	☐ Rule 462 (05/14/99) ☐ 40 CFR60 SUBPART XX ☐ 40 CFR63 SUBPART R ☐ 40 CFR63 SUBPART BBBBBB ☐ 40 CFR63 SUBPART EEEE	☐ Rule 462(f) See Applicable Subpart See Applicable Subpart See Applicable Subpart See Applicable Subpart	☐ Rule 462(g) See Applicable Subpart See Applicable Subpart See Applicable Subpart See Applicable Subpart
☐ Cadmium Electroplating Operation	☐ Rule 1426 (05/02/03)		☐ Rule 1426(e)
☐ Calciner, Mineral Industries	☐ 40 CFR60 SUBPART UUU	See Applicable Subpart	See Applicable Subpart
☐ Calciner, Petroleum Coke	☐ Rule 477 (04/03/81) ☐ Rule 1119 (03/02/79) ☐ 40 CFR63 SUBPART L	☐ AQMD Visible Emissions, AQMD TM 5.1, 5.2, or 5.3 ☐ AQMD TM 6.1 or 100.1 See Applicable Subpart	See Applicable Subpart
☐ Charbroilers	☐ Rule 1174 (10/05/90) ☐ Rule 1138 (11/14/97)	☐ AQMD Test Protocol ☐ Rule 1138(g)	☐ Rule 1138(d)
☐ Chrome Plating & Chromic Acid Anodizing Operation	☐ Rule 1426 (05/02/03) ☐ Rule 1469 (12/05/08)	☐ Rule 1469(e)	☐ Rule 1426(e) ☐ Rule 1469(g), (j) & (k)

KEY ABBREVIATIONS: **Reg.** = AQMD Regulation; **Rule** = AQMD Rule; **App.** = Appendix; **AQMD TM** = AQMD Test Method; **CFR** = Code of Federal Regulations; **CCR** = California Code of Regulations

© South Coast Air Quality Management District, Form 500-C1 (2011.02)

Section II - Applicable Requirements, Test Methods, & MRR Requirements

Equipment/Process	Applicable Requirement	Test Method	MRR Requirement
☐ Coating Operation, Adhesive Application Operation	☐ Rule 109 (05/02/03) ☐ Rule 481 (01/11/02) ☐ Rule 1132 (05/05/06) ☐ Rule 1168 (01/07/05) ☐ Rule 1171 (05/01/09) ☐ 40 CFR60 SUBPART RR	☐ Rule 109(g) ☐ Rule 481(d) ☐ Rule 1132(f) ☐ Rule 1168(f) & (e) ☐ Rule 1171(e) See Applicable Subpart	☐ Rule 109(c) ☐ Rule 1132(g) ☐ Rule 1168(d) ☐ Rule 1171(c)(6) See Applicable Subpart
☐ Coating Operation, Aerospace Assembly & Component Manufacturing	☐ Rule 109 (05/02/03) ☐ Rule 481 (01/11/02) ☐ Rule 1124 (09/21/01) ☐ Rule 1132 (05/05/06) ☐ Rule 1171 (05/01/09) ☐ 40 CFR63 SUBPART GG	☐ Rule 109(g) ☐ Rule 481(d) ☐ Rule 1124(e) & (f) ☐ Rule 1132(f) ☐ Rule 1171(e) See Applicable Subpart	☐ Rule 109(c) ☐ Rule 1124(j) & (d) ☐ Rule 1132(g) ☐ Rule 1171(c)(6) See Applicable Subpart
☐ Coating Operation, Graphic Arts (Gravure, Letter Press, Flexographic & Lithographic Printing Process, Etc.)	☐ Rule 109 (05/02/03) ☐ Rule 481 (01/11/02) ☐ Rule 1130 (10/08/99) ☐ Rule 1132 (05/05/06) ☐ Rule 1171 (05/01/09) ☐ 40 CFR60 SUBPART QQ ☐ 40 CFR60 SUBPART RR ☐ 40 CFR60 SUBPART FFF ☐ 40 CFR60 SUBPART VVV ☐ 40 CFR63 SUBPART KK ☐ 40 CFR63 SUBPART JJJJ	☐ Rule 109(g) ☐ Rule 481(d) ☐ Rule 1130(h) ☐ Rule 1132(f) ☐ Rule 1171(e) See Applicable Subpart See Applicable Subpart See Applicable Subpart See Applicable Subpart See Applicable Subpart See Applicable Subpart	☐ Rule 109(c) ☐ Rule 1130(e) ☐ Rule 1132(g) ☐ Rule 1171(c)(6) See Applicable Subpart See Applicable Subpart See Applicable Subpart See Applicable Subpart See Applicable Subpart See Applicable Subpart See Applicable Subpart
☐ Coating Operation, Magnet Wire Coating	☐ Rule 109 (05/02/03) ☐ Rule 481 (01/11/02) ☐ Rule 1126 (01/13/95) ☐ Rule 1132 (05/05/06) ☐ Rule 1171 (05/01/09)	☐ Rule 109(g) ☐ Rule 481(d) ☐ Rule 1126(d) ☐ Rule 1132(f) ☐ Rule 1171(e)	☐ Rule 109(c) ☐ Rule 1126(c)(4) ☐ Rule 1132(g) ☐ Rule 1171(c)(6)

KEY ABBREVIATIONS:	Reg. = AQMD Regulation Rule = AQMD Rule	App. = Appendix AQMD TM = AQMD Test Method	CFR = Code of Federal Regulations CCR = California Code of Regulations

© South Coast Air Quality Management District, Form 500-C1 (2011.02)

Section II - Applicable Requirements, Test Methods, & MRR Requirements			
Equipment/Process	**Applicable Requirement**	**Test Method**	**MRR Requirement**
☐ Coating Operation, Marine Coating (Except for recreational equipment)	☐ Rule 109 (05/02/03) ☐ Rule 481 (01/11/02) ☐ Rule 1106 (01/13/95) ☐ Rule 1132 (05/05/06) ☐ Rule 1171 (05/01/09) ☐ 40 CFR63 SUBPART II	☐ Rule 109(g) ☐ Rule 481(d) ☐ Rule 1106(e) ☐ Rule 1132(f) ☐ Rule 1171(e) See Applicable Subpart	☐ Rule 109(c) ☐ Rule 1106(c)(5) ☐ Rule 1132(g) ☐ Rule 1171(c)(6) See Applicable Subpart
☐ Coating Operation, Metal Coating	☐ Rule 109 (05/02/03) ☐ Rule 481 (01/11/02) ☐ Rule 1107 (01/06/06) ☐ Rule 1132 (05/05/06) ☐ Rule 1171 (05/01/09) ☐ 40 CFR60 SUBPART EE ☐ 40 CFR60 SUBPART SS ☐ 40 CFR63 SUBPART NNNN ☐ 40 CFR63 SUBPART MMMM ☐ 40 CFR63 SUBPART RRRR	☐ Rule 109(g) ☐ Rule 481(d) ☐ Rule 1107(e) ☐ Rule 1132(f) ☐ Rule 1171(e) See Applicable Subpart See Applicable Subpart See Applicable Subpart See Applicable Subpart See Applicable Subpart	☐ Rule 109(c) ☐ Rule 1107(j) ☐ Rule 1132(g) ☐ Rule 1171(c)(6) See Applicable Subpart See Applicable Subpart See Applicable Subpart See Applicable Subpart See Applicable Subpart
☐ Coating Operation, Metal Containers, Closure, & Coil Coating Operations	☐ Rule 109 (05/02/03) ☐ Rule 481 (01/11/02) ☐ Rule 1125 (03/07/08) ☐ Rule 1132 (05/05/06) ☐ Rule 1171 (05/01/09) ☐ 40 CFR60 SUBPART TT ☐ 40 CFR60 SUBPART WW ☐ 40 CFR63 SUBPART KKKK ☐ 40 CFR63 SUBPART SSSS	☐ Rule 109(g) ☐ Rule 481(d) ☐ Rule 1125(e) ☐ Rule 1132(f) ☐ Rule 1171(e) See Applicable Subpart See Applicable Subpart See Applicable Subpart See Applicable Subpart	☐ Rule 109(c) ☐ Rule 1125(c)(6) ☐ Rule 1132(g) ☐ Rule 1171(c)(6) See Applicable Subpart See Applicable Subpart See Applicable Subpart See Applicable Subpart
☐ Coating Operation, Motor Vehicle & Mobile Equipment Non-Assembly Line Coating Operation	☐ Rule 109 (05/02/03) ☐ Rule 481 (01/11/02) ☐ Rule 1132 (05/05/06) ☐ Rule 1151 (12/02/05) ☐ Rule 1171 (05/01/09)	☐ Rule 109(g) ☐ Rule 481(d) ☐ Rule 1132(f) ☐ Rule 1151(h) ☐ Rule 1171(e)	☐ Rule 109© ☐ Rule 1132(g) ☐ Rule 1151(f) ☐ Rule 1171(c)(6)

KEY ABBREVIATIONS:	Reg. = AQMD Regulation Rule = AQMD Rule	App. = Appendix AQMD TM = AQMD Test Method	CFR = Code of Federal Regulations CCR = California Code of Regulations

© South Coast Air Quality Management District, Form 500-C1 (2011.02)

Section II - Applicable Requirements, Test Methods, & MRR Requirements			
Equipment/Process	**Applicable Requirement**	**Test Method**	**MRR Requirement**
☐ Coating Operation, Screen Printing	☐ Rule 109 (05/02/03) ☐ Rule 1130.1 (12/13/96) ☐ Rule 1132 (05/05/06) ☐ Rule 1171 (05/01/09) ☐ 40 CFR63 SUBPART KK	☐ Rule 109(g) ☐ Rule 1130.1(g) ☐ Rule 1132(f) ☐ Rule 1171(e) See Applicable Subpart	☐ Rule 109(c) ☐ Rule 1130.1(c)(5) ☐ Rule 1132(g) ☐ Rule 1171(c)(6) See Applicable Subpart
☑ Coating Operation, Use Of Architectural Coating (Stationary Structures)	☑ Rule 109 (05/02/03) ☐ Rule 481 (01/11/02) ☑ Rule 1113 (07/13/07) ☐ Rule 1132 (05/05/06) ☑ Rule 1171 (05/01/09)	☑ Rule 109(g) ☐ Rule 481(d) ☑ Rule 1113(e) ☐ Rule 1132(f) ☑ Rule 1171(e)	☑ Rule 109(c) ☐ Rule 1132(g) ☑ Rule 1171(c)(6)
☐ Coating Operation, Wood Flat Stock	☐ Rule 109 (05/02/03) ☐ Rule 481 (01/11/02) ☐ Rule 1104 (08/13/99) ☐ Rule 1132 (05/05/06) ☐ Rule 1171 (05/01/09) ☐ 40 CFR63 SUBPART II	☐ Rule 109(g) ☐ Rule 481(d) ☐ Rule 1104(e) ☐ Rule 1132(f) ☐ Rule 1171(e) See Applicable Subpart	☐ Rule 109(c) ☐ Rule 1104(d) ☐ Rule 1132(g) ☐ Rule 1171(c)(6) See Applicable Subpart
☐ Coating Operation, Wood Products (Commercial Furniture, Cabinets, Shutters, Frames, Toys)	☐ Rule 109 (05/02/03) ☐ Rule 481 (01/11/02) ☐ Rule 1132 (05/05/06) ☐ Rule 1136 (06/14/96) ☐ Rule 1171 (05/01/09) ☐ 40 CFR63 SUBPART JJ	☐ Rule 109(g) ☐ Rule 481(d) ☐ Rule 1132(f) ☐ Rule 1136(f) ☐ Rule 1171(e) See Applicable Subpart	☐ Rule 109(c) ☐ Rule 1132(g) ☐ Rule 1136(d) & (g) ☐ Rule 1171(c)(6) See Applicable Subpart
☐ Coater	See Coating Operations		
☐ Columns	See Petroleum Refineries, Fugitive Emissions		
☐ Composting Operation	☐ Rule 1133 (01/10/03) ☐ Rule 1133.1 (01/10/03) ☐ Rule 1133.2 (01/10/03)	☐ Rule 1133.1(e) ☐ Rule 1133.2(g)	☐ Rule 1133.1(d) ☐ Rule 1133.2(h)
☐ Compressors	See Fugitive Emissions or Petroleum Refineries, Fugitive Emissions		
☐ Concrete Batch Plants	See Nonmetallic Mineral Processing Plants		
☐ Consumer Product Manufacturing	See Manufacturing, Consumer Product		
☐ Cooling Tower, Hexavalent Chromium	☐ 40 CFR63 SUBPART Q	See Applicable Subpart	See Applicable Subpart

KEY ABBREVIATIONS: Reg. = AQMD Regulation; Rule = AQMD Rule; App. = Appendix; **AQMD TM** = AQMD Test Method; **CFR** = Code of Federal Regulations; **CCR** = California Code of Regulations

© South Coast Air Quality Management District, Form 500-C1 (2011.02)

Section II - Applicable Requirements, Test Methods, & MRR Requirements			
Equipment/Process	**Applicable Requirement**	**Test Method**	**MRR Requirement**
☐ Copper Electroplating Operation	☐ Rule 1426 (05/02/03)		☐ Rule 1426(e)
☐ Crude Oil Production	See Oil Well Operations		
☐ Crusher	See Nonmetallic Mineral Processing Plants		
☐ Dairy Farms and Related Operations	☐ Rule 1127 (08/06/04)	☐ Rule 1127(h)	☐ Rule 1127(g)
☑ Degreasers	☑ Rule 109 (05/02/03) ☑ Rule 1122 (05/01/09) ☑ Rule 1171 (05/01/09) ☐ 40 CFR63 SUBPART T	☑ Rule 109(g) ☑ Rule 1122(h) ☑ Rule 1171(e) See Applicable Subpart	☑ Rule 109(c) ☑ Rule 1122(i) ☑ Rule 1171(c)(6) See Applicable Subpart
☐ Dry Cleaning, Perchloroethlyene	☐ Rule 1421 (12/06/02)	☐ Rule 1421(e) & (i)	☐ Rule 1421(g) & (h)
☐ Dry Cleaning, Petroleum Solvent	☐ Rule 109 (05/02/03) ☐ Rule 1102 (11/17/00) ☐ 40 CFR60 SUBPART JJJ	☐ Rule 109(g) ☐ Rule 1102(g) See Applicable Subpart	☐ Rule 109(c) ☐ Rule 1102(f) See Applicable Subpart
☐ Dryers, Mineral Industries	☐ 40 CFR60 SUBPART UUU	See Applicable Subpart	See Applicable Subpart
☐ Ethylene Oxide Sterilizer	See Sterilizer, Ethylene Oxide		
☐ Flanges	See Fugitive Emissions or Petroleum Refineries, Fugitive Emissions		
☐ Fluid Catalytic Cracking Unit	☐ Rule 218 (05/14/99) ☐ Rule 1105 (09/01/84) ☐ Rule 1105.1 (11/07/03)	☐ AQMD TM 100.1 ☐ Rule 1105(c)(1) ☐ Rule 1105.1(f)	☐ Rule 218(e) & (f) ☐ Rule 1105(c)(2) ☐ Rule 1105.1(e)
☐ Foundries, Iron and Steel	☐ 40 CFR63 SUBPART EEEEE	See Applicable Subpart	See Applicable Subpart
☐ Friction Materials Manufacturing	See Manufacturing, Friction Materials		
☐ Fugitive Emissions, Benzene	☐ Rule 1173 (12/06/02) ☐ 40 CFR61 SUBPART L ☐ 40 CFR61 SUBPART V ☐ 40 CFR63 SUBPART R ☐ 40 CFR63 SUBPART CC	☐ Rule 1173(j) See Applicable Subpart See Applicable Subpart See Applicable Subpart See Applicable Subpart	☐ Rule 1173(i) See Applicable Subpart See Applicable Subpart See Applicable Subpart See Applicable Subpart

KEY ABBREVIATIONS:	Reg. = AQMD Regulation Rule = AQMD Rule	App. = Appendix AQMD TM = AQMD Test Method	CFR = Code of Federal Regulations CCR = California Code of Regulations

© South Coast Air Quality Management District, Form 500-C1 (2011.02)

Section II - Applicable Requirements, Test Methods, & MRR Requirements

Equipment/Process	Applicable Requirement	Test Method	MRR Requirement
☐ Fugitive Emissions, Chemical Plant	☐ Rule 466 (10/07/83)	☐ Rule 466(f)	☐ Rule 466(e)
	☐ Rule 466.1 (03/16/84)	☐ Rule 466.1(g)	☐ Rule 466.1(h)
	☐ Rule 467 (03/05/82)	☐ Rule 467(f)	☐ Rule 467(e)
	☐ Rule 1173 (02/06/09)	☐ Rule 1173(j)	☐ Rule 1173(i)
	☐ 40 CFR60 SUBPART VV	See Applicable Subpart	See Applicable Subpart
	☐ 40 CFR61 SUBPART V	See Applicable Subpart	See Applicable Subpart
	☐ 40 CFR63 SUBPART F	See Applicable Subpart	See Applicable Subpart
	☐ 40 CFR63 SUBPART G	See Applicable Subpart	See Applicable Subpart
	☐ 40 CFR63 SUBPART H	See Applicable Subpart	See Applicable Subpart
	☐ 40 CFR63 SUBPART I	See Applicable Subpart	See Applicable Subpart
	☐ 40 CFR63 SUBPART R	See Applicable Subpart	See Applicable Subpart
	☐ 40 CFR63 SUBPART CC	See Applicable Subpart	See Applicable Subpart
☐ Fugitive Emissions, Natural Gas Processing Plant	☐ Rule 466 (10/07/83)	☐ Rule 466(f)	☐ Rule 466(e)
	☐ Rule 466.1 (03/16/84)	☐ Rule 466.1(g)	☐ Rule 466.1(h)
	☐ Rule 467 (03/05/82)	☐ Rule 467(f)	☐ Rule 467(e)
	☐ Rule 1173 (02/06/09)	☐ Rule 1173(j)	☐ Rule 1173(i)
	☐ 40 CFR60 SUBPART KKK	See Applicable Subpart	See Applicable Subpart
	☐ 40 CFR61 SUBPART V	See Applicable Subpart	See Applicable Subpart
	☐ 40 CFR63 SUBPART F	See Applicable Subpart	See Applicable Subpart
	☐ 40 CFR63 SUBPART G	See Applicable Subpart	See Applicable Subpart
	☐ 40 CFR63 SUBPART H	See Applicable Subpart	See Applicable Subpart
	☐ 40 CFR63 SUBPART I	See Applicable Subpart	See Applicable Subpart
	☐ 40 CFR63 SUBPART R	See Applicable Subpart	See Applicable Subpart
	☐ 40 CFR63 SUBPART CC	See Applicable Subpart	See Applicable Subpart

KEY ABBREVIATIONS: Reg. = AQMD Regulation; Rule = AQMD Rule; App. = Appendix; AQMD TM = AQMD Test Method; CFR = Code of Federal Regulations; CCR = California Code of Regulations

© South Coast Air Quality Management District, Form 500-C1 (2011.02)

Section II - Applicable Requirements, Test Methods, & MRR Requirements			
Equipment/Process	**Applicable Requirement**	**Test Method**	**MRR Requirement**
☐ Fugitive Emissions, Oil & Gas Production Facility	☐ Rule 466 (10/07/83)	☐ Rule 466(f)	☐ Rule 466(e)
	☐ Rule 466.1 (03/16/84)	☐ Rule 466.1(g)	☐ Rule 466.1(h)
	☐ Rule 467 (03/05/82)	☐ Rule 467(f)	☐ Rule 467(e)
	☐ Rule 1173 (02/06/09)	☐ Rule 1173(j)	☐ Rule 1173(i)
	☐ 40 CFR61 SUBPART V	See Applicable Subpart	See Applicable Subpart
	☐ 40 CFR63 SUBPART F	See Applicable Subpart	See Applicable Subpart
	☐ 40 CFR63 SUBPART G	See Applicable Subpart	See Applicable Subpart
	☐ 40 CFR63 SUBPART H	See Applicable Subpart	See Applicable Subpart
	☐ 40 CFR63 SUBPART I	See Applicable Subpart	See Applicable Subpart
	☐ 40 CFR63 SUBPART R	See Applicable Subpart	See Applicable Subpart
	☐ 40 CFR63 SUBPART CC	See Applicable Subpart	See Applicable Subpart
☐ Fugitive Emissions, Pipeline Transfer Station	☐ Rule 466 (10/07/83)	☐ Rule 466(f)	☐ Rule 466(e)
	☐ Rule 466.1 (03/16/84)	☐ Rule 466.1(g)	☐ Rule 466.1(h)
	☐ Rule 467 (03/05/82)	☐ Rule 467(f)	☐ Rule 467(e)
	☐ Rule 1173 (02/06/09)	☐ Rule 1173(j)	☐ Rule 1173(i)
	☐ 40 CFR61 SUBPART V	See Applicable Subpart	See Applicable Subpart
	☐ 40 CFR63 SUBPART F	See Applicable Subpart	See Applicable Subpart
	☐ 40 CFR63 SUBPART G	See Applicable Subpart	See Applicable Subpart
	☐ 40 CFR63 SUBPART H	See Applicable Subpart	See Applicable Subpart
	☐ 40 CFR63 SUBPART I	See Applicable Subpart	See Applicable Subpart
	☐ 40 CFR63 SUBPART R	See Applicable Subpart	See Applicable Subpart
	☐ 40 CFR63 SUBPART CC	See Applicable Subpart	See Applicable Subpart
☐ Furnace, Basic Oxygen Process	☐ 40 CFR60 SUBPART Na	See Applicable Subpart	See Applicable Subpart
☐ Furnace, Electric Arc, For Steel Plants: Constructed After August 17, 1983	☐ 40 CFR60 SUBPART AAa	See Applicable Subpart	See Applicable Subpart
☐ Furnace, Electric Arc, For Steel Plants: Constructed After Oct. 21, 1974, & On Or Before Aug. 17, 1983	☐ 40 CFR60 SUBPART AA	See Applicable Subpart	See Applicable Subpart
☐ Furnace, Glass Melting	☐ Rule 1117 (01/06/84)	☐ Rule 1117(c), AQMD TM 7.1 or 100.1	
	☐ 40 CFR60 SUBPART CC	See Applicable Subpart	See Applicable Subpart
✓ Furnace, Lead Melting, Automotive Batteries	☐ Rule 1101 (10/07/77)	☐ AQMD TM 6.1	
	✓ 40 CFR63 SUBPART X	See Applicable Subpart	See Applicable Subpart

KEY ABBREVIATIONS: **Reg.** = AQMD Regulation; **Rule** = AQMD Rule; **App.** = Appendix; **AQMD TM** = AQMD Test Method; **CFR** = Code of Federal Regulations; **CCR** = California Code of Regulations

© South Coast Air Quality Management District, Form 500-C1 (2011.02)

Section II - Applicable Requirements, Test Methods, & MRR Requirements			
Equipment/Process	**Applicable Requirement**	**Test Method**	**MRR Requirement**
☐ Gasoline Transfer & Dispensing Operation	☐ Rule 461 (06/03/05)	☐ Rule 461(f)	☐ Rule 461(e)(6) & (e)(7)
☐ Glass Manufacturing	See Manufacturing, Glass		
☐ Grain Elevators	☐ 40 CFR60 SUBPART DD	See Applicable Subpart	See Applicable Subpart
☐ Halon-containing Equipment, Use for Technician Training, Testing, Maintenance, Service, Repair, or Disposal	☐ 40 CFR82 SUBPART H	See Applicable Subpart	See Applicable Subpart
☐ Hazardous Waste Combustors	☐ 40 CFR63 SUBPART EEE	See Applicable Subpart	See Applicable Subpart
☐ Heater, Asphalt Pavement	☐ Rule 1120 (08/04/78)	☐ AQMD Visible Emissions, AQMD TM 6.2	☐ Rule 1120(f)
☐ Heaters, Petroleum Refinery Process	☐ Rule 429 (12/21/90) ☐ Rule 431.1 (06/12/98) ☐ Rule 1146 (09/05/08) ☐ 40 CFR60 SUBPART J ☐ 40 CFR63 SUBPART DDDDD	N/A ☐ Rule 431.1(f) ☐ Rule 1146(d) See Applicable Subpart See Applicable Subpart	☐ Rule 429(d) ☐ Rule 431.1(d) & (e) ☐ Rule 1146(c)(6) & (c)(7) See Applicable Subpart See Applicable Subpart
☐ Heaters, Process	See Boilers		
☐ Incinerators	☐ 40 CFR60 SUBPART E ☐ 40 CFR60 SUBPART CCCC	See Applicable Subpart See Applicable Subpart	See Applicable Subpart See Applicable Subpart
☐ Inorganic Arsenic Emissions, Arsenic Trioxide & Metallic Arsenic Production Facilities	☐ 40 CFR61 SUBPART P	See Applicable Subpart	See Applicable Subpart
☐ Internal Combustion Engines, Reciprocating	☐ Rule 1110.2 (07/09/10) ☐ 40 CFR60 SUBPART IIII and JJJJ ☐ 40 CFR63 SUBPART ZZZZ	Rule 1110.2(g) See Applicable Subpart See Applicable Subpart	Rule 1110.2(f) See Applicable Subpart See Applicable Subpart
☐ Kiln, Cement Plant	☐ Rule 1112 (06/06/86) ☐ Rule 1112.1 (12/04/09) ☐ 40 CFR60 SUBPART F	N/A N/A See Applicable Subpart	N/A N/A See Applicable Subpart

KEY ABBREVIATIONS:	Reg. = AQMD Regulation Rule = AQMD Rule	App. = Appendix AQMD TM = AQMD Test Method	CFR = Code of Federal Regulations CCR = California Code of Regulations

© South Coast Air Quality Management District, Form 500-C1 (2011.02)

Section II - Applicable Requirements, Test Methods, & MRR Requirements			
Equipment/Process	**Applicable Requirement**	**Test Method**	**MRR Requirement**
☐ Landfills	☐ Rule 1150 (10/15/82) ☐ Rule 1150.1 (03/17/00) ☐ 40 CFR60 SUBPART WWW ☐ 40 CFR63 SUBPART AAAA	☐ Rule 1150.1(j) See Applicable Subpart See Applicable Subpart	☐ Rule 1150.1(e) & (f) See Applicable Subpart See Applicable Subpart
☐ Lead Acid Battery Manufacturing Plants	See Manufacturing, Lead Acid Battery		
☐ Lead Electroplating Operation	☐ Rule 1426 (05/02/03)		☐ Rule 1426(e)
☐ Manufacturing, Asphalt Processing & Asphalt Roofing	☐ Rule 470 (05/07/76) ☐ Rule 1108 (02/01/85) ☐ Rule 1108.1 (11/04/83) ☐ 40 CFR60 SUBPART UU ☐ 40 CFR63 SUBPART LLLLL	N/A ☐ Rule 1108(b) ☐ Rule 1108.1 (b) See Applicable Subpart See Applicable Subpart	See Applicable Subpart See Applicable Subpart
☐ Manufacturing, Brick & Structural Clay Products	☐ 40 CFR63 SUBPART JJJJJ	See Applicable Subpart	See Applicable Subpart
☐ Manufacturing, Cement	☐ Rule 1156 (03/06/09)	☐ Rule 1156(g)	☐ Rule 1156(f)
☐ Manufacturing, Clay Ceramics	☐ 40 CFR63 SUBPART KKKKK	See Applicable Subpart	See Applicable Subpart
☐ Manufacturing, Coatings & Ink (SIC Code 2851)	☐ Rule 1141.1 (11/17/00) ☐ 40 CFR63 SUBPART HHHHH	N/A See Applicable Subpart	☐ Rule 1141.1(c) See Applicable Subpart
☐ Manufacturing, Consumer Product	☐ Title 17 CCR 94500		
☐ Manufacturing, Food Product	☐ Rule 1131 (06/06/03)	☐ Rule 1131(e)	☐ Rule 1131(d)
☐ Manufacturing, Friction Materials	☐ 40 CFR63 SUBPART QQQQQ	See Applicable Subpart	See Applicable Subpart
☐ Manufacturing, Glass	☐ Rule 1117 (01/06/84) ☐ 40 CFR60 SUBPART CC ☐ 40 CFR61 SUBPART N	☐ Rule 1117(c), AQMD TM 7.1 or 100.1 See Applicable Subpart See Applicable Subpart	 See Applicable Subpart See Applicable Subpart
☐ Manufacturing, Hydrochloric Acid	☐ 40 CFR63 SUBPART NNNNN	See Applicable Subpart	See Applicable Subpart
☐ Manufacturing, Lead-Acid Battery	☐ 40 CFR60 SUBPART KK	See Applicable Subpart	See Applicable Subpart

KEY ABBREVIATIONS:	Reg. = AQMD Regulation Rule = AQMD Rule	App. = Appendix AQMD TM = AQMD Test Method	CFR = Code of Federal Regulations CCR = California Code of Regulations

© South Coast Air Quality Management District, Form 500-C1 (2011.02)

Section II - Applicable Requirements, Test Methods, & MRR Requirements			
Equipment/Process	**Applicable Requirement**	**Test Method**	**MRR Requirement**
☐ Manufacturing, Lime	☐ 40 CFR63 SUBPART AAAAA	See Applicable Subpart	See Applicable Subpart
☐ Manufacturing, Magnetic Tape Industry	☐ 40 CFR60 SUBPART SSS ☐ 40 CFR63 SUBPART EE	See Applicable Subpart See Applicable Subpart	See Applicable Subpart See Applicable Subpart
☐ Manufacturing, Miscellaneous Organic Chemical	☐ 40 CFR63 SUBPART FFFF	See Applicable Subpart	See Applicable Subpart
☐ Manufacturing, Nitric Acid	☐ Rule 218 (05/14/99) ☐ Rule 1159 (12/06/85) ☐ 40 CFR60 SUBPART G	☐ AQMD TM 100.1 ☐ AQMD TM 7.1 or 100.1 See Applicable Subpart	☐ Rule 218(e) & (f) See Applicable Subpart
☐ Manufacturing, Plywood & Composite Wood Products	☐ Rule 1137 (02/01/02) ☐ 40 CFR63 SUBPART DDDD	N/A See Applicable Subpart	☐ Rule 1137(e) See Applicable Subpart
☐ Manufacturing, Polymer Industry	☐ 40 CFR60 SUBPART DDD ☐ 40 CFR63 SUBPART W ☐ 40 CFR63 SUBPART J	See Applicable Subpart See Applicable Subpart See Applicable Subpart	See Applicable Subpart See Applicable Subpart See Applicable Subpart
☐ Manufacturing, Polymeric Cellular Foam	☐ Rule 1175 (09/07/07) ☐ 40 CFR63 SUBPART UUUU	☐ Rule 1175(f) See Applicable Subpart	☐ Rule 1175(e) See Applicable Subpart
☐ Manufacturing, Products Containing Halon Blends	☐ 40 CFR82 SUBPART H	See Applicable Subpart	See Applicable Subpart
☐ Manufacturing, Products Containing Organic Solvents	☐ Rule 443.1 (12/05/86)	N/A	N/A
☐ Manufacturing, Products Containing Ozone Depleting Substances (ODS)	☐ 40 CFR82 SUBPART A ☐ 40 CFR82 SUBPART E	See Applicable Subpart See Applicable Subpart	See Applicable Subpart See Applicable Subpart
☐ Manufacturing, Reinforced Plastic Composites	☐ 40 CFR63 SUBPART WWWW	See Applicable Subpart	See Applicable Subpart
☐ Manufacturing, Refractory Products	☐ 40 CFR63 SUBPART SSSSS	See Applicable Subpart	See Applicable Subpart
☐ Manufacturing, Resin	☐ Rule 1141 (11/17/00) ☐ 40 CFR63 SUBPART W	☐ Rule 1141(d) See Applicable Subpart	☐ Rule 1141(c) See Applicable Subpart
☐ Manufacturing, Rubber Tire	☐ 40 CFR63 SUBPART XXXX	See Applicable Subpart	See Applicable Subpart
☐ Manufacturing, Semiconductors	☐ Rule 109 (05/02/03) ☐ Rule 1164 (01/13/95) ☐ Rule 1171 (05/01/09) ☐ 40 CFR63 SUBPART BBBBB	☐ Rule 109(g) ☐ Rule 1164(e) ☐ Rule 1171(e) See Applicable Subpart	☐ Rule 109(c) ☐ Rule 1164(c)(5) ☐ Rule 1171(c)(6) See Applicable Subpart
☐ Manufacturing, Solvent	☐ Rule 443 (05/07/76)	N/A	N/A

KEY ABBREVIATIONS:
Reg. = AQMD Regulation
Rule = AQMD Rule
App. = Appendix
AQMD TM = AQMD Test Method
CFR = Code of Federal Regulations
CCR = California Code of Regulations

© South Coast Air Quality Management District, Form 500-C1 (2011.02)

Section II - Applicable Requirements, Test Methods, & MRR Requirements			
Equipment/Process	**Applicable Requirement**	**Test Method**	**MRR Requirement**
Manufacturing, Sulfuric Acid	Rule 469 (02/13/81) 40 CFR60 SUBPART H 40 CFR60 SUBPART Cd	AQMD TM 6.1 or 6.2 See Applicable Subpart See Applicable Subpart	See Applicable Subpart See Applicable Subpart
Manufacturing, Surfactant	Rule 1141.2 (01/11/02)	Rule 1141.2(e) AQMD TM 25.1	
Manufacturing, Synthetic Organic Chemical Manufacturing Industry (SOCMI) Air Oxidation Unit Processes	40 CFR60 SUBPART III 40 CFR60 SUBPART NNN	See Applicable Subpart See Applicable Subpart	See Applicable Subpart See Applicable Subpart
Manufacturing, Synthetic Organic Chemical Manufacturing Industry (SOCMI) Reactor Processes	40 CFR60 SUBPART RRR	See Applicable Subpart	See Applicable Subpart
Manufacturing, Vinyl Chloride	40 CFR61 SUBPART F	See Applicable Subpart	See Applicable Subpart
Manufacturing, Water Heaters	Rule 1121 (09/03/04)	N/A	N/A
Manufacturing, Wool Fiberglass Insulation	40 CFR60 SUBPART PPP	See Applicable Subpart	See Applicable Subpart
Manure Processing Operations	Rule 1127 (08/06/04)	Rule 1127(h)	Rule 1127(g)
Marine Tank Vessel Operations	Rule 1142 (07/19/91) Rule 1173 (02/06/09) 40 CFR63 SUBPART Y	Rule 1142(e) Rule 1173(j) See Applicable Subpart	Rule 1142(h) Rule 1173(i) See Applicable Subpart
Mercury Emissions	40 CFR61 SUBPART E 40 CFR63 SUBPART IIII	See Applicable Subpart See Applicable Subpart	See Applicable Subpart See Applicable Subpart
Motor Vehicle Air Conditioners with Ozone Depleting Substances (ODS): Repair, Service, Manufacturing, Maintenance, or Disposal	40 CFR82 SUBPART B 40 CFR82 SUBPART F	See Applicable Subpart See Applicable Subpart	See Applicable Subpart See Applicable Subpart
Municipal Waste Combustors	40 CFR60 SUBPART Cb 40 CFR60 SUBPART Ea 40 CFR60 SUBPART Eb	See Applicable Subpart See Applicable Subpart See Applicable Subpart	See Applicable Subpart See Applicable Subpart See Applicable Subpart
Negative Air Machines/HEPA, Asbestos	40 CFR61 SUBPART M	See Applicable Subpart	See Applicable Subpart
Nickel Electroplating Operation	Rule 1426 (05/02/03)		Rule 1426(e)
Nonmetallic Mineral Processing Plants	Rule 404 (02/07/86) Rule 405 (02/07/86) 40 CFR60 SUBPART OOO	AQMD TM 5.1, 5.2, or 5.3 AQMD TM 5.1, 5.2, or 5.3 See Applicable Subpart	See Applicable Subpart
Off-site Waste and Recovery Operation	40 CFR63 SUBPART DD	See Applicable Subpart	See Applicable Subpart

KEY ABBREVIATIONS: Reg. = AQMD Regulation; Rule = AQMD Rule; App. = Appendix; AQMD TM = AQMD Test Method; CFR = Code of Federal Regulations; CCR = California Code of Regulations

© South Coast Air Quality Management District, Form 500-C1 (2011.02)

Section II - Applicable Requirements, Test Methods, & MRR Requirements			
Equipment/Process	**Applicable Requirement**	**Test Method**	**MRR Requirement**
☐ Oil and Gas Well Operation	☐ Rule 1148 (11/05/82) ☐ Rule 1148.1 (03/05/04)	☐ AQMD TM 25.1 ☐ Rule 1148.1 (g)	☐ Rule 1148.1 (f)
☐ Onshore Natural Gas Processing, SO2 Emissions	☐ 40 CFR60 SUBPART LLL	See Applicable Subpart	See Applicable Subpart
☐ Open Fires	☐ Rule 444 (11/07/08)		
☐ Open Storage, Petroleum Coke	☐ Rule 403 (06/03/05) ☐ Rule 403.1 (04/02/04) ☐ Rule 1158 (06/11/99)	☐ Rule 403(d)(4) ☐ Rule 1158(h)	☐ Rule 403(f) ☐ Rule 403.1(h) ☐ Rule 1158(j)
☐ Open Storage	☐ Rule 403 (06/03/05) ☐ Rule 403.1 (04/02/04)	☐ Rule 403(d)(4)	☐ Rule 403(f) ☐ Rule 403.1(h)
☐ Outer Continental Shelf Platform	☐ Rule 1183 (03/12/93) ☐ 40 CFR55	☐ 40 CFR55 See Applicable Subpart	☐ 40 CFR55 See Applicable Subpart
☐ Oven, Commercial Bakery	☐ Rule 1153 (01/13/95)	☐ Rule 1153(h)	☐ Rule 1153(g)
☐ Oven, Petroleum Coke	☐ Rule 477 (04/03/81) ☐ 40 CFR63 SUBPART L ☐ 40 CFR63 SUBPART CCCCC	☐ AQMD Visible Emissions, AQMD TM 5.1, 5.2, or 5.3 See Applicable Subpart See Applicable Subpart	See Applicable Subpart See Applicable Subpart
☐ Ozone Depleting Substances (ODS) or Alternative ODS, Use	☐ 40 CFR82 Subpart G	See Applicable Subpart	See Applicable Subpart

KEY ABBREVIATIONS:	Reg. = AQMD Regulation Rule = AQMD Rule	App. = Appendix AQMD TM = AQMD Test Method	CFR = Code of Federal Regulations CCR = California Code of Regulations

© South Coast Air Quality Management District, Form 500-C1 (2011.02)

Section II - Applicable Requirements, Test Methods, & MRR Requirements			
Equipment/Process	**Applicable Requirement**	**Test Method**	**MRR Requirement**
☐ Petroleum Refineries	☐ Rule 218 (05/14/99)	☐ AQMD TM 100.1	☐ Rule 218(e) & (f)
	☐ Rule 465 (08/13/99)		
	☐ Rule 468 (10/08/76)	☐ AQMD TM 6.1 or 6.2	
	☐ Rule 469 (02/13/81)	☐ AQMD TM 6.1 or 6.2	
	☐ Rule 1118 (11/04/05)	☐ Rule 1118(j)	☐ Rule 1118(f), (g), (h), & (i)
	☐ Rule 1123 (12/07/90)	N/A	☐ Rule 1123(c)
	☐ Rule 1189 (01/21/00)	☐ Rule 1189(f)	☐ Rule 1189(e)
	☐ 40 CFR60 SUBPART J	See Applicable Subpart	See Applicable Subpart
	☐ 40 CFR63 SUBPART F	See Applicable Subpart	See Applicable Subpart
	☐ 40 CFR63 SUBPART G	See Applicable Subpart	See Applicable Subpart
	☐ 40 CFR63 SUBPART H	See Applicable Subpart	See Applicable Subpart
	☐ 40 CFR63 SUBPART I	See Applicable Subpart	See Applicable Subpart
	☐ 40 CFR63 SUBPART CC	See Applicable Subpart	See Applicable Subpart
	☐ 40 CFR63 SUBPART EEEE	See Applicable Subpart	See Applicable Subpart
	☐ 40 CFR63 SUBPART GGGGG	See Applicable Subpart	See Applicable Subpart
	☐ Title 13 CCR 2250		
☐ Petroleum Refineries, Fugitive Emissions	☐ Rule 1173 (02/06/09)	☐ Rule 1173(j)	☐ Rule 1173(i)
	☐ Rule 466 (10/07/83)	☐ Rule 466(f)	☐ Rule 466(e)
	☐ Rule 466.1 (03/16/84)	☐ Rule 466.1(g)	☐ Rule 466.1(h)
	☐ Rule 467 (03/05/82)	☐ Rule 467(f)	☐ Rule 467(e)
	☐ 40 CFR60 SUBPART GGG	See Applicable Subpart	See Applicable Subpart
	☐ 40 CFR61 SUBPART V	See Applicable Subpart	See Applicable Subpart
	☐ 40 CFR63 SUBPART F	See Applicable Subpart	See Applicable Subpart
	☐ 40 CFR63 SUBPART G	See Applicable Subpart	See Applicable Subpart
	☐ 40 CFR63 SUBPART H	See Applicable Subpart	See Applicable Subpart
	☐ 40 CFR63 SUBPART I	See Applicable Subpart	See Applicable Subpart
	☐ 40 CFR63 SUBPART R	See Applicable Subpart	See Applicable Subpart
	☐ 40 CFR63 SUBPART CC	See Applicable Subpart	See Applicable Subpart

KEY ABBREVIATIONS:	Reg. = AQMD Regulation Rule = AQMD Rule	App. = Appendix AQMD TM = AQMD Test Method	CFR = Code of Federal Regulations CCR = California Code of Regulations

© South Coast Air Quality Management District, Form 500-C1 (2011.02)

Section II - Applicable Requirements, Test Methods, & MRR Requirements			
Equipment/Process	**Applicable Requirement**	**Test Method**	**MRR Requirement**
☐ Petroleum Refineries, Storage Tanks	☐ Rule 463 (05/06/05) ☐ Rule 1178 (04/07/06) ☐ 40 CFR60 SUBPART K ☐ 40 CFR60 SUBPART Ka ☐ 40 CFR60 SUBPART Kb ☐ 40 CFR63 SUBPART F ☐ 40 CFR63 SUBPART G ☐ 40 CFR63 SUBPART H ☐ 40 CFR63 SUBPART I ☐ 40 CFR63 SUBPART R ☐ 40 CFR63 SUBPART CC ☐ 40 CFR63 SUBPART EEEE	☐ Rule 463(g) ☐ Rule 1178(i) See Applicable Subpart See Applicable Subpart See Applicable Subpart See Applicable Subpart See Applicable Subpart See Applicable Subpart See Applicable Subpart See Applicable Subpart See Applicable Subpart See Applicable Subpart	☐ Rule 463(e)(5) ☐ Rule 1178(f) & (h) See Applicable Subpart See Applicable Subpart See Applicable Subpart See Applicable Subpart See Applicable Subpart See Applicable Subpart See Applicable Subpart See Applicable Subpart See Applicable Subpart See Applicable Subpart
☐ Petroleum Refineries, Wastewater Systems	☐ Rule 1176 (09/13/96) ☐ Rule 464 (12/07/90) ☐ 40 CFR60 SUBPART QQQ ☐ 40 CFR63 SUBPART CC	☐ Rule 1176(h) N/A See Applicable Subpart See Applicable Subpart	☐ Rule 1176(f) & (g) See Applicable Subpart See Applicable Subpart
☐ Pharmaceuticals & Cosmetics Manufacturing	☐ Rule 1103 (03/12/99) ☐ 40 CFR63 SUBPART GGG	☐ Rule 1103(f) See Applicable Subpart	☐ Rule 1103(e) See Applicable Subpart
☐ Polyester Resin Operation	☐ Rule 109 (05/02/03) ☐ Rule 1162 (07/08/05) ☐ Rule 1171 (05/01/09)	☐ Rule 109(g) ☐ Rule 1162(f) ☐ Rule 1171(e)	☐ Rule 109(c) ☐ Rule 1162(e) ☐ Rule 1171(c)(6)
☐ Primary Magnesium Refining	☐ 40 CFR63 SUBPART TTTTT	See Applicable Subpart	See Applicable Subpart
☐ Printing Press	See Coating Operations		
☐ Publicly Owned Treatment Works Operations	☐ Rule 1179 (03/06/92) ☐ 40 CFR60 SUBPART O	☐ Rule 1179(e) See Applicable Subpart	☐ Rule 1179(c) & (d) See Applicable Subpart
☐ Pumps	See Fugitive Emissions or Petroleum Refineries, Fugitive Emissions		

KEY ABBREVIATIONS:	Reg. = AQMD Regulation Rule = AQMD Rule	App. = Appendix AQMD TM = AQMD Test Method	CFR = Code of Federal Regulations CCR = California Code of Regulations

© South Coast Air Quality Management District, Form 500-C1 (2011.02)

Section II : Applicable Requirements, Test Methods, & MRR Requirements			
Equipment/Process	**Applicable Requirement**	**Test Method**	**MRR Requirement**
☐ Recycling & Recovery Equipment for Ozone Depleting Substances (ODS),	☐ 40 CFR82 SUBPART F	See Applicable Subpart	See Applicable Subpart
☐ Refrigerant Reclaimers for Ozone Depleting Substances (ODS)	☐ 40 CFR82 SUBPART F	See Applicable Subpart	See Applicable Subpart
☐ Rendering Plant	☐ Rule 472 (05/07/76)	N/A	☐ Rule 472(b)
☐ Rock Crushing	See Nonmetallic Mineral Processing Plants		
☐ Secondary Aluminum Production	☐ 40 CFR63 SUBPART LL	See Applicable Subpart	See Applicable Subpart
☐ Semiconductor Manufacturing	See Manufacturing, Semiconductors		
☐ Sewage Treatment Plants	See Publicly Owned Treatment Works Operation		
☐ Site Remediation	☐ 40 CFR63 SUBPART GGGGG	See Applicable Subpart	See Applicable Subpart
☐ Smelting, Primary Copper	☐ 40 CFR63 SUBPART QQQ	See Applicable Subpart	See Applicable Subpart
☑ Smelting, Secondary Lead	☑ 40 CFR60 SUBPART L ☑ 40 CFR63 SUBPART X	See Applicable Subpart See Applicable Subpart	See Applicable Subpart See Applicable Subpart
☐ Soil Decontamination / Excavation	☐ Rule 1166 (05/11/01) ☐ 40 CFR63 SUBPART GGGGG	☐ Rule 1166(e) See Applicable Subpart	☐ Rule 1166(c)(1)(C) See Applicable Subpart
☐ Spray Booth	See Coating Operations		
☐ Sterilizer, Ethylene Oxide	☐ 40 CFR63 SUBPART O	See Applicable Subpart	See Applicable Subpart
☐ Storage Tank, Degassing Operation	☐ Rule 1149 (07/14/95) ☐ 40 CFR63 SUBPART CC	See Applicable Subpart	See Applicable Subpart

KEY ABBREVIATIONS:	Reg. = AQMD Regulation Rule = AQMD Rule	App. = Appendix AQMD TM = AQMD Test Method	CFR = Code of Federal Regulations CCR = California Code of Regulations

© South Coast Air Quality Management District, Form 500-C1 (2011.02)

Section II. - Applicable Requirements, Test Methods, & MRR Requirements			
Equipment/Process	**Applicable Requirement**	**Test Method**	**MRR Requirement**
☐ Storage Tank, Greater Than 19,815 Gallon Capacity	☐ Rule 463 (05/06/05) ☐ Rule 1178 (04/07/06) ☐ 40 CFR63 SUBPART F ☐ 40 CFR63 SUBPART G ☐ 40 CFR63 SUBPART H ☐ 40 CFR63 SUBPART I ☐ 40 CFR60 SUBPART K ☐ 40 CFR60 SUBPART Ka ☐ 40 CFR60 SUBPART Kb ☐ 40 CFR63 SUBPART R ☐ 40CFR63 SUBPART BBBBBB ☐ 40 CFR63 SUBPART CC	☐ Rule 463(g) ☐ Rule 1178(i) See Applicable Subpart See Applicable Subpart See Applicable Subpart See Applicable Subpart See Applicable Subpart See Applicable Subpart See Applicable Subpart See Applicable Subpart See Applicable Subpart See Applicable Subpart	☐ Rule 463(e)(5) ☐ Rule 1178(h) See Applicable Subpart See Applicable Subpart See Applicable Subpart See Applicable Subpart See Applicable Subpart See Applicable Subpart See Applicable Subpart See Applicable Subpart See Applicable Subpart See Applicable Subpart
☐ Synthetic Fiber Production Facilities	☐ 40 CFR60 SUBPART HHH	See Applicable Subpart	See Applicable Subpart
☐ Taconite Iron Ore Processing Facilities	☐ 40 CFR63 SUBPART RRRRR	See Applicable Subpart	See Applicable Subpart
☐ Turbine, Stationary Gas-Fired	☐ Rule 1134 (08/08/97) ☐ Rule 475 (08/07/78) ☐ 40 CFR60 SUBPART GG ☐ 40 CFR60 SUBPART KKKK ☐ 40 CFR63 SUBPART YYYY	☐ Rule 1134(e) & (g) ☐ AQMD TM 5.1, 5.2, or 5.3 See Applicable Subpart See Applicable Subpart See Applicable Subpart	☐ Rule 1134(d) & (f) See Applicable Subpart See Applicable Subpart See Applicable Subpart
☐ Turbine, Stationary Oil-Fired	☐ 40 CFR63 SUBPART YYYY	See Applicable Subpart	See Applicable Subpart
☐ Valves	See Fugitive Emissions or Petroleum Refineries, Fugitive Emissions		
☐ Vessel, Refinery Process	☐ Rule 1123 (12/07/90)	N/A	☐ Rule 1123(c)
☐ Vessels	See Petroleum Refineries, Fugitive Emissions		

KEY ABBREVIATIONS:	Reg. = AQMD Regulation Rule = AQMD Rule	App. = Appendix AQMD TM = AQMD Test Method	CFR = Code of Federal Regulations CCR = California Code of Regulations

© South Coast Air Quality Management District, Form 500-C1 (2011.02)

Section II - Applicable Requirements, Test Methods, & MRR Requirements			
Equipment/Process	**Applicable Requirement**	**Test Method**	**MRR Requirement**
☐ Wastewater, Chemical Plant	☐ Rule 464 (12/07/90) ☐ Rule 1176 (09/13/96) ☐ 40 CFR63 SUBPART F ☐ 40 CFR63 SUBPART G ☐ 40 CFR63 SUBPART H ☐ 40 CFR63 SUBPART I ☐ 40 CFR63 SUBPART CC	N/A ☐ Rule 1176(h) See Applicable Subpart See Applicable Subpart See Applicable Subpart See Applicable Subpart See Applicable Subpart	☐ Rule 1176(f) & (g) See Applicable Subpart See Applicable Subpart See Applicable Subpart See Applicable Subpart See Applicable Subpart
☐ Wastewater Treatment, Other	☐ Rule 464 (12/07/90) ☐ Rule 1176 (09/13/96)	N/A ☐ Rule 1176(h)	☐ Rule 1176(f) & (g)
☐ Woodworking Operations	☐ Rule 1137 (02/01/02)	N/A	☐ Rule 1137(e)

KEY ABBREVIATIONS:	Reg. = AQMD Regulation Rule = AQMD Rule	App. = Appendix AQMD TM = AQMD Test Method	CFR = Code of Federal Regulations CCR = California Code of Regulations

© South Coast Air Quality Management District, Form 500-C1 (2011.02)

Section III - Supplemental Identification of Specific Requirements

Complete this section only if there is a specific requirement (i.e., rule reference, test method, or MRR requirement) that is:

1. Listed for a specific type of equipment or process in Section II of this form & **DOES NOT** pertain to a specific device at your facility*; OR,
2. Is **NOT** Listed for a specific type of equipment or process in Section II of this form but it **IS** applicable to a specific device at your facility.

NOTES:

1. For any specific requirement, test method, or MRR requirement that is identified as "Remove," attach additional sheets to explain the reasons why the specific requirement does not pertain to the device listed.
2. All boxes that are checked in Section II and any additional requirements identified in this section as "Add" will be used to determine the facility's compliance status. This information will be used to verify the certification statements made on Form 500-A2.
3. Do not use this section to identify equipment that is exempt from specific rule requirements. Your equipment is automatically considered to be in compliance with the rule that specifically exempts the equipment from those requirements.
4. Listing any requirement that does not apply to a specific piece of equipment in this section will not provide the facility with a permit shield unless one is specifically requested by completing Form 500-D and approved by the AQMD.

* If this section is completed as part of the initial Title V application & there is no device number assigned, refer to the existing permit or application number in this column.

Device No.*	Specific Requirement (Rule Number & Date)	Add (A) or Remove (R) (Check one)	Test Method	Add (A) or Remove (R) (Check one)	MRR Requirement	Add (A) or Remove (R) (Check one)
		O A O R		O A O R		O A O R
		O A O R		O A O R		O A O R
		O A O R		O A O R		O A O R
		O A O R		O A O R		O A O R
		O A O R		O A O R		O A O R
		O A O R		O A O R		O A O R
		O A O R		O A O R		O A O R
		O A O R		O A O R		O A O R
		O A O R		O A O R		O A O R
		O A O R		O A O R		O A O R
		O A O R		O A O R		O A O R
		O A O R		O A O R		O A O R
		O A O R		O A O R		O A O R
		O A O R		O A O R		O A O R
		O A O R		O A O R		O A O R
		O A O R		O A O R		O A O R
		O A O R		O A O R		O A O R

Section V - AQMD Rules That Are Not SIP-Approved (Continued on Following Page)					
Check off each AQMD Rule as it applies to the facility. Use the blanks at the end of this form to fill-in new items.					
Non SIP - Approved Rule	Adoption/ Amendment Date	Check (✓) If Applies	Non SIP - Approved Rule	Adoption/ Amendment Date	Check (✓) If Applies
53 Los Angeles Co.	N/A	☐	1192	06/16/00	☐
53 Orange Co.	N/A	☐	1193	07/09/10	☐
53 Riverside Co.	N/A	☐	1194	10/20/00	☐
53 San Bernardino Co.	N/A	☐	1195	05/05/06	☐
53A San Bernardino Co.	N/A	☐	1196	06/06/08	☐
402	05/07/76	✓	1401	09/10/10	✓
429	12/21/90	☐	1401.1	11/04/05	☐
430	07/12/96	✓	1402	03/04/05	✓
441	05/07/76	☐	1403	10/05/07	☐
473	05/07/76	☐	1404	04/06/90	☐
477	04/03/81	☐	1405	01/04/91	☐
480	10/07/77	☐	1406	07/08/94	☐
1109	08/05/88	☐	1407	07/08/94	✓
1110.2	07/09/10	☐	1411	03/01/91	☐
1116.1	10/20/78	☐	1414	05/03/91	☐
1127	08/06/04	☐	1415	10/14/94	☐
1143	07/09/10	☐	1418	09/10/99	☐
1147	12/05/08	☐	1420	09/11/92	✓
1148.1	03/05/04	☐	1420.1	11/05/10	✓
1150	10/15/82	☐	1421	12/06/02	☐
1155	12/04/09	☐	1425	03/16/01	☐
1156	03/06/09	☐	1426	05/02/03	☐
1157	09/08/06	☐			☐

Section V - AQMD Rules That Are Not SIP-Approved (Continued on Following Page)					
Check off each AQMD Rule as it applies to the facility. Use the blanks at the end of this form to fill-in new items.					
Non SIP - Approved Rule	**Adoption/ Amendment Date**	**Check (✓) If Applies**	**Non SIP - Approved Rule**	**Adoption/ Amendment Date**	**Check (✓) If Applies**
1469	12/05/08	☐	2009.1	05/11/01	☐
1469.1	03/04/05	☐	2501	05/09/97	☐
1470	06/01/07	☐	2506	12/10/99	☐
1472	03/07/08	☐			☐
2009	01/07/05	☐			☐
		☐			☐
		☐			☐
		☐			☐
		☐			☐
		☐			☐

C156/C157

South Coast Air Quality Management District

Form 400-A

Application Form for Permit or Plan Approval

List only one piece of equipment or process per form.

XPP

Mail To:
SCAQMD
P.O. Box 4944
Diamond Bar, CA 91765-0944
Tel: (909) 396-3385
www.aqmd.gov

Section A - Operator Information

1. Facility Name (Business Name of Operator to Appear on the Permit): Exide Technologies

2. Valid AQMD Facility ID (Available On Permit Or Invoice Issued By AQMD): 124838

3. Owner's Business Name (If different from Business Name of Operator):

Section B - Equipment Location Address

4. Equipment Location Is: (•) Fixed Location ( ) Various Location
(For equipment operated at various locations, provide address of initial site.)

Street Address: 2700 S. Indiana Street
City: Vernon, CA Zip: 90058
Contact Name: Ed Mopas Title: Environmental Manager
Phone #: (323) 262-1101 Ext. 259 Fax #: (323) 262-0642
E-Mail: ed.mopas@exide.com

Section C - Permit Mailing Address

5. Permit and Correspondence Information:
[X] Check here if same as equipment location address

Address: 2700 S. Indiana Street
City: Vernon State: CA Zip: 90058
Contact Name: Ed Mopas Title: Environmental Manager
Phone #: (323) 262-1101 Ext. 259 Fax #: (323) 262-0642
E-Mail: ed.mopas@exide.com

Section D - Application Type

6. The Facility Is: ( ) Not In RECLAIM or Title V ( ) In RECLAIM ( ) In Title V (•) In RECLAIM & Title V Programs

7. Reason for Submitting Application (Select only ONE):

7a. New Equipment or Process Application:
- ( ) New Construction (Permit to Construct)
- ( ) Equipment On-Site But Not Constructed or Operational
- ( ) Equipment Operating Without A Permit *
- ( ) Compliance Plan
- ( ) Registration/Certification
- ( ) Streamlined Standard Permit

7b. Facility Permits:
- ( ) Title V Application or Amendment (Refer to Title V Matrix)
- ( ) RECLAIM Facility Permit Amendment

7c. Equipment or Process with an Existing/Previous Application or Permit:
- ( ) Administrative Change
- (•) Alteration/Modification (50)
- ( ) Alteration/Modification without Prior Approval *
- ( ) Change of Condition
- ( ) Change of Condition without Prior Approval *
- ( ) Change of Location
- ( ) Change of Location without Prior Approval *
- ( ) Equipment Operating with an Expired/Inactive Permit *

Existing or Previous Permit/Application
If you checked any of the items in 7c., you MUST provide an existing Permit or Application Number: 520478

* A Higher Permit Processing Fee and additional Annual Operating Fees (up to 3 full years) may apply (Rule 301(c)(1)(D)(i)).

8a. Estimated Start Date of Construction (mm/dd/yyyy): 08/01/2014
8b. Estimated End Date of Construction (mm/dd/yyyy): 08/31/2014
8c. Estimated Start Date of Operation (mm/dd/yyyy): 08/31/2014

9. Description of Equipment or Reason for Compliance Plan (list applicable rule):
Add secondary HEPA filters to outlet of baghouses C156 and C157 (MAC baghouses)

10. For Identical equipment, how many additional applications are being submitted with this application? (Form 400-A required for each equipment / process): 0

11. Are you a Small Business as per AQMD's Rule 102 definition? (10 employees or less and total gross receipts are $500,000 or less OR a not-for-profit training center) (•) No ( ) Yes

12. Has a Notice of Violation (NOV) or a Notice to Comply (NC) been issued for this equipment? (•) No ( ) Yes
If Yes, provide NOV/NC#:

Section E - Facility Business Information

13. What type of business is being conducted at this equipment location? Secondary lead smelter

14. What is your business primary NAICS Code? (North American Industrial Classification System) 331492

15. Are there other facilities in the SCAQMD jurisdiction operated by the same operator? ( ) No (•) Yes

16. Are there any schools (K-12) within 1000 feet of the facility property line? (•) No ( ) Yes

Section F - Authorization/Signature

I hereby certify that all information contained herein and information submitted with this application are true and correct.

17. Signature of Responsible Official: H Hogarth

18. Title of Responsible Official: Plant Manager

19. I wish to review the permit prior to issuance. (This may cause a delay in the application process.) ( ) No ( ) Yes

20. Print Name: John Hogarth

21. Date:

22. Do you claim confidentiality of data? (If Yes, see instructions.) ( ) No ( ) Yes

23. Check List: [X] Authorized Signature/Date [X] Form 400-CEQA [X] Supplemental Form(s) (ie., Form 400-E-xx) [X] Fees Enclosed

AQMD USE ONLY	APPLICATION TRACKING #	CHECK #	AMOUNT RECEIVED	PAYMENT TRACKING #	VALIDATION
	558214	112837	20,746.59	CT 11236	15/13

DATE	APP REJ	DATE	APP REJ	CLASS I III	BASIC CONTROL	EQUIPMENT CATEGORY CODE	TEAM	ENGINEER	REASON/ACTION TAKEN
							A		

© South Coast Air Quality Management District, Form 400-A (2012.07)

5 of 6

South Coast Air Quality Management District

Form 400-E-9f
External Combustion
Metal Melting & Heat Treating Furnaces

This form must be accompanied by a completed Application for a Permit to Construct/Operate - Forms 400-A, Form 400-CEQA, and Form 400-PS.

Section C - Process Description (cont.)

Operation

○ Batch ○ Continuous Operating Temperature_____ °F

Production Data

List all materials processed in this furnace:

Materials (e.g. Aluminum, glass, etc.)	Weight or Volume (%)	process Rate (pounds/hour)
lead		

Controls

Furnace is vented to: ◉ Afterburner ○ Baghouse ○ Selective Catalytic Reduction (SCR) ○ Knock-out Chamber

Instrumentation Data

Describe instrumentation data for measuring temperature and other operating parameters.

A radar-based charge level sensor will be installed within the Blast Furnace in order to provide operators with ongoing data regarding the level of the feed burden within the furnace. In addition, a temperature sensor will be installed within the top of the Blast Furnace as a further operational indicator to guide operators in maintaining the furnace at its desired condition.

Operating Schedule

Normal: 24 hours/day 7 days/week 52 weeks/yr

Maximum: 24 hours/day 7 days/week 52 weeks/yr

Section D - Authorization/Signature

I hereby certify that all information contained herein and information submitted with this application is true and correct.

Preparer Info

Signature: Michael DiCostanzo Date: 4/10/2014

Title: Manager Company Name: ENVIRON Int'l Corp.

Name: Michael DiCostanzo

Phone #: (213) 943-6353 Fax #: (213) 943-6301

Email: mdicostanzo@environcorp.com

Contact Info

Name: Ed Mopas

Title: Env. Manager Company Name: Exide Technologies

Phone #: (323) 262-1101 Fax #: (323) 262-0642

Email: ed.mopas@exide.com

THIS IS A PUBLIC DOCUMENT

Pursuant to the California Public Records Act, your permit application and any supplemental documentation are public records and may be disclosed to a third party. If you wish to claim certain limited information as exempt from disclosure because it qualifies as a trade secret, as defined in the District's Guidelines for Implementing the California Public Records Act, you must make such claim at the time of submittal to the District.

Check here if you claim that this form or its attachments contain confidential trade secret information. ☐

© South Coast Air Quality Management District, Form 400-E-9f (2009.04)

Form 400-E-GI
Exide Blast Furnace Slag Tap (D132)

Equipment Location

The Blast Furnace Slag Tap (D132) will remain inside the Smelter Building, immediately in front of the Blast Furnace (D128).

Equipment Description

The Blast Furnace Slag tap operates by discharging the slag produced during the lead-acid battery smelting processes. A tap hole into the blast furnace is opened with a bar, air lance or jack-hammer. The slag then flows from the Blast Furnace, through the slag launder and into a slag pot. See Appendix D for flow diagram and diagram of new hood dimensions.

Device ID	Device Name	A/N	Other Devices in Permit Unit	Current Connections	Modifications	
					Add	Remove
D132	Blast Furnace Slag Tap	374225	D126-D131, D133	C38, C39, C46	connection to C41	connection to C46
					connection to C45	

Process Description

Exide Technologies (Exide) is a secondary lead smelter that recycles lead batteries and other lead-bearing scrap materials. As part of a series of modifications to the Blast Furnace (D128), the Blast Furnace Slag Tap (D132) will have its hood enlarged and reshaped to provide greater interior hood volume to allow high velocity discharge gases to slow and facilitate capture by the hood. The flow from this hood (14,000 CFM) will be split, with half going to blast baghouse (C45) and half going to the new repurposed blast baghouse 2 (C41); after passing through the baghouses, the exhaust will then go through subsequent wet scrubbing. The hood will no longer be connected to the hard lead baghouse (C46).

Please see Appendix D for additional details.

Operating Schedule

Duration	Hours/Day	Days/Week	Weeks/Year
Average	24	7	52
Maximum	24	7	52

Process Rate

The processing rate of the raw materials in the blast furnace is not expected to change as a result of this modification.

Fuels and Burners

No changes to the fuel or the burners in the blast furnace are occurring as a result of this modification.

Flow Diagram

Please see Figures 1 (before) and 2 (after) to see the changes in the equipment connections.

Form 400-E-GI
Exide Blast Furnace Slag Tap (D132)

P:\E\Exide\SCAQMD Permitting\2014\Forms\7c-Exide AQMDForm-E-gi-D132 Blast Furnace Slag Tap.docx

Form 400-E-GI
Exide Blast Furnace Thimble (D133)

Equipment Location

The blast furnace thimble (D133) is located atop the blast furnace (D128) on the third level of the Smelter Building.

Equipment Description

The blast furnace thimble (D133) is used to charge the blast furnace with feed. It currently sits within a larger enclosure that is vented to the Hard Lead Ventilated System. See Appendix C for flow diagrams and new enclosure dimensions.

Device ID	Device Name	A/N	Other Devices in Permit Unit	Current Connections	Modifications	
					Add	Remove
D133	Blast Furnace Thimble	374225	D126-D132	C38, C39, C46	connection to C44	connection to C46

Process Description

Exide Technologies (Exide) is a secondary lead smelter that recycles lead batteries and other lead-bearing scrap materials. Currently the thimble sits within a larger enclosure which is routed to the Hard Lead Ventilation System (C46, S140). It is equipped with an automated feed chute cover door.

Exide will enhance the enclosure within which the blast furnace is situated to maximize capture of gases that escape from the blast furnace charging door and route them through the afterburner (C44) rather than potentially reaching the Torit building ventilation system. This enclosure enhancement will take the form of a replacement of the siding forming the current enclosure with a sealed skin and close-fitting doors wherever access is required at those upper levels. This enhanced enclosure structure will serve as a hood itself to ensure capture of gases potentially released from the furnace charging area. Any released process gases would be hotter than the surrounding atmosphere and would rise into the collection system that will now be routed to the afterburner (C44) and subsequent scrubber. Appendix C includes preliminary drawings/graphics describing the enclosure improvement project and showing how currently open spaces or doorways will be closed. This will improve and maintain emission reductions.

Further, a new enclosure within the overall blast furnace partial enclosure will be installed around the furnace charge area so as to serve as a further hood to enhance capture of gases escaping the charge isolation door by the hoods at the top of this enclosure. The current partial enclosure in which the blast furnace resides will be enhanced with sealed siding and close-fitting doors. The blast furnace charging area is at the third level within this current larger enclosure at which there is a personnel landing at the level of the charge thimble. Exide proposes to install a second inner enclosure at this level. Within this inner enclosure will be the current collection hoods (the slot hood behind the isolation door and three other existing hoods currently routed to the Hard Lead Ventilation System) with an aggregate flow of 25,000 cfm. These hoods would capture emissions escaping beyond the isolation door and their exhaust will be rerouted into the inlet of the blast furnace afterburner (C44) for organic emission control. This level has an opening down through the skip hoist tunnel. To maximize the inward draw through other remaining openings into this new charge level inner enclosure, and to cancel any chimney effect up and through the skip hoist tunnel toward the ventilation extraction at the top of the furnace, a portion of the hard lead baghouse ventilation flow that is being "freed up" by the removal of a number of sources to that system (two refining kettles,

blast furnace slag tap hood, and hoods at blast furnace charge area) will be used to impose suction at the bottom section of the skip hoist tunnel, creating a pressure null point within that tunnel. Thus, air will not be drawn up this pathway to the hooding at the charge area. The remaining openings (exclusive of the skip hoist tunnel) to this new inner enclosure will be limited to an aggregate cross sectional area of 125 square feet. Thus, the inward draft velocity through the openings to this new inner enclosure of the blast furnace charge area will be 25,000 cfm/ 125 square feet = 200 feet/minute. This new inner enclosure will sit within the top reaches of the current overall blast furnace partial enclosure which is to be fitted with new siding and doors that can be closed. Exide proposes to replace and/or otherwise seal the siding which comprises the current enclosure around the blast furnace and to install doors where ingress/egress points above the floor level for that enclosure are currently open. Appendix C includes a preliminary drawing describing the enclosure improvement project and showing how the siding will be replaced and currently open gaps or doorways will be closed. This outer enclosure forms a larger bell which has a bottom extent below the thimble height, further facilitating capture from the charge area due to the chimney effect of the heated gases.

This double layer of enclosure and extraction will direct the blast furnace charging area fugitives that might escape the isolation door to the afterburner and subsequent wet scrubbing primary APC systems.

See Appendix C for drawings of new enclosures.

Operating Schedule

Duration	Hours/Day	Days/Week	Weeks/Year
Average	24	7	52
Maximum	24	7	52

Process Rate

The processing rate of the raw materials in the reverb furnace is not expected to change as a result of this modification.

Fuels and Burners

No changes to the fuel or the burners in the reverb furnace are occurring as a result of this modification.

Flow Diagram

Please see Figures 1 (before) and 2 (after) to see the changes in the equipment connections.

P:\E\Exide\SCAQMD Permitting\2014\Forms\7d-Exide AQMDForm-E-gi-D133 Blast Furnace Thimble.docx

South Coast Air Quality Management District

Form 400-E-1a
Particulate Matter Control
Fabric Filter (Baghouse)/Cartridge Collector

This form must be accompanied by a completed Application for a Permit to Construct/Operate - Forms 400-A, Form 400-CEQA, and Form 400-PS.

Blast Furnace Baghouse

Mail To:
SCAQMD
P.O. Box 4944
Diamond Bar, CA 91765-0944
Tel: (909) 396-3385
www.aqmd.gov

Section A - Operator Information

Facility Name (Business Name of Operator That Appears On Permit): Exide Technologies

Valid AQMD Facility ID (Available On Permit Or Invoice Issued By AQMD): 124838

Address where the equipment will be operated (for equipment which will be moved to various location in AQMD's jurisdiction, please list the initial location site): 2700 S. Indiana Street, Vernon, CA 90058

(•) Fixed Location ( ) Various Locations

Section B - Equipment Description (Complete Part I or Part II)

Equipment	Manufacturer: Model No.:
Part I: For Fabric Filters	
Bag Material	( ) Nomex® ( ) Nylon ( ) Polyester ( ) Acrylics ( ) Fiber Glass ( ) Cotton (•) Teflon® ( ) PFTE Membrane Laminated ( ) Textratex® ( ) Other
Bag Dimensions	Number of Bags: Bag Length: sq. ft. Bag Diameter: ft. Total Filter Area: 22620 sq. ft. Designed Air to Filter Ratio: 1 : 1
Part II: For Cartridge Filters	
Cartridge Dimensions	Number of Cartridges: Total Filter Area: sq. ft. Designed Air to Filter Ratio: : 1 Size of Each Cartridge: Diameter ft. Length ft. Material:

Section C - Device And Method

Dust Collection Device	( ) Pneumatic ( ) Drag Conveyor ( ) Closed Container ( ) Rotary Airlock Values ( ) Double Dump ( ) Screw Conveyors ( ) Manual Discharge Device: ( ) Slide Gate ( ) Hinged Doors or Drawers
Cleaning Method	( ) Pulse Jet ( ) Reverse Air (If Reverse Air, Is it: ( ) Online or ( ) Offline) (•) Mechanical Shaker ( ) Other
Blower	Blower Horsepower: H.P. Design Flow Rate: SCFM Draft: ( ) Forced ( ) Induced
Design Criteria	Baghouse Configuration: ( ) Positive Pressure ( ) Negative Pressure
Pre-Treatment Device	[X] Cyclone [ ] Precooler [ ] Preheater [ ] Knock-Out Chamber [ ] HEPA [ ] None
Post-Treatment Device	[ ] HEPA [ ] Afterburner [X] Other: Venturi/Tray Scrubber

© South Coast Air Quality Management District, Form 400-E-1a (2009.04)

South Coast Air Quality Management District

Form 400-E-1a
Particulate Matter Control
Fabric Filter (Baghouse)/Cartridge Collector

This form must be accompanied by a completed Application for a Permit to Construct/Operate - Forms 400-A, Form 400-CEQA, and Form 400-PS.

Section D - Process Stream Characteristics

Brief Description Of Process

Please include a process flow diagram and engineering drawing of the filter system and material processed. In the space provided, indicate what equipment is vented to the baghouse and how waste material is handled and disposed.

Existing Device ID C45 (Blast Furnace Baghouse) will receive half of process gases from the afterburner, pot furnaces D7 and D9, and blast furnace slag tap. The outlet flow will be split between the existing scrubber system (C42/43) and the new scrubber system.

Particulate Size Distribution Data

Micron Range	Particle Size Distribution (Wt%)	Manufacturer's Guaranteed Removal Efficiency For Each Micron Range (%)
0.5 - 1.0		
1.0 - 5.0		
5 - 10		
10 - 20		
Over 20		

Flow Data

Gas Stream Temperature: _____ °F

Pressure Drop Range: High _____ in. H_2O Low _____ in. H_2O

Inlet Flow Rate: 32500 ACFM

Moisture Content: _____ grams of water/cubic feet (ft^3) of dry air

Dew Point Temperature of Process Stream: _____ °F

Operating Schedule

Normal: 24 hours/day 7 days/week 52 weeks/yr

Maximum: 24 hours/day 7 days/week 52 weeks/yr

Section E - Authorization/Signature

I hereby certify that all information contained herein and information submitted with this application is true and correct.

Preparer Info

Signature: Michael DiCostanzo Date: 4/10/2014

Title: Manager Company Name: ENVIRON Int' Corp.

Name: Michael DiCostanzo

Phone #: (213) 943-6353 Fax #: (213) 943-6301

Email: mdicostanzo@environcorp.com

Contact Info

Name: Ed Mopas

Title: Env. Manager Company Name: Exide Technologies

Phone #: (323) 262-1101 Fax #: (323) 262-0642

Email: ed.mopas@exide.com

THIS IS A PUBLIC DOCUMENT

Pursuant to the California Public Records Act, your permit application and any supplemental documentation are public records and may be disclosed to a third party. If you wish to claim certain limited information as exempt from disclosure because it qualifies as a trade secret, as defined in the District's Guidelines for Implementing the California Public Records Act, you must make such claim at the time of submittal to the District.

Check here if you claim that this form or its attachments contain confidential trade secret information. ☐

© South Coast Air Quality Management District, Form 400-E-1a (2008.09)

South Coast Air Quality Management District

Blast Baghouse 2

Form 400-E-1a
Particulate Matter Control
Fabric Filter (Baghouse)/Cartridge Collector

This form must be accompanied by a completed Application for a Permit to Construct/Operate - Forms 400-A, Form 400-CEQA, and Form 400-PS.

Mail To:
SCAQMD
P.O. Box 4944
Diamond Bar, CA 91765-0944

Tel: (909) 396-3385
www.aqmd.gov

Section A - Operator Information

Facility Name (Business Name of Operator That Appears On Permit): Exide Technologies

Valid AQMD Facility ID (Available On Permit Or Invoice Issued By AQMD): 124838

Address where the equipment will be operated (for equipment which will be moved to various location in AQMD's jurisdiction, please list the initial location site): 2700 S. Indiana Street, Vernon, CA 90058

(•) Fixed Location ( ) Various Locations

Section B - Equipment Description (Complete Part I or Part II)

Equipment

Manufacturer: _____ Model No.: _____

Part I: For Fabric Filters

Bag Material

( ) Nomex® ( ) Nylon ( ) Polyester ( ) Acrylics ( ) Fiber Glass ( ) Cotton (•) Teflon®
( ) PFTE Membrane Laminated ( ) Textratex® ( ) Other _____

Bag Dimensions

Number of Bags: 510 Bag Length: _____ sq. ft. Bag Diameter: _____ ft.
Total Filter Area: 21362 sq. ft. Designed Air to Filter Ratio: 2 : 1

Part II: For Cartridge Filters

Cartridge Dimensions

Number of Cartridges: _____ Total Filter Area: _____ sq. ft. Designed Air to Filter Ratio: _____ : 1
Size of Each Cartridge: Diameter _____ ft. Length _____ ft.
Material:

Section C - Device And Method

Dust Collection Device

( ) Pneumatic ( ) Drag Conveyor ( ) Closed Container
( ) Rotary Airlock Values ( ) Double Dump
( ) Screw Conveyors ( ) Manual Discharge Device: ( ) Slide Gate ( ) Hinged Doors or Drawers

Cleaning Method

( ) Pulse Jet ( ) Reverse Air (If Reverse Air, Is it: ( ) Online or ( ) Offline)
(•) Mechanical Shaker ( ) Other _____

Blower

Blower Horsepower: _____ H.P. Design Flow Rate: _____ SCFM
Draft: ( ) Forced ( ) Induced

Design Criteria

Baghouse Configuration: ( ) Positive Pressure ( ) Negative Pressure

Pre-Treatment Device

[x] Cyclone [ ] Precooler [ ] Preheater [ ] Knock-Out Chamber [ ] HEPA [ ] None

Post-Treatment Device

[ ] HEPA [ ] Afterburner [x] Other: Baghouse, Venturi/Tray Scrubber

© South Coast Air Quality Management District, Form 400-E-1a (2009.04)

South Coast Air Quality Management District

Form 400-E-1a
Particulate Matter Control
Fabric Filter (Baghouse)/Cartridge Collector

This form must be accompanied by a completed Application for a Permit to Construct/Operate - Forms 400-A, Form 400-CEQA, and Form 400-PS.

Section D - Process Stream Characteristics

Brief Description Of Process

Please include a process flow diagram and engineering drawing of the filter system and material processed. In the space provided, indicate what equipment is vented to the baghouse and how waste material is handled and disposed.

Existing Device ID C41 (Blast Baghouse 2, formerly Reverb Baghouse) will be removed from the Reverb Furnace control train and receive half of the process gases from the blast furnace afterburner (C44), slag tap (D132), and pot furnaces D7 and D9. All of the outlet will go to the new scrubber system.

Particulate Size Distribution Data

Micron Range	Particle Size Distribution (Wt%)	Manufacturer's Guaranteed Removal Efficiency For Each Micron Range (%)
0.5 - 1.0		
1.0 - 5.0		
5 - 10		
10 - 20		
Over 20		

Flow Data

Gas Stream Temperature: _____ °F

Pressure Drop Range: High _____ in. H_2O Low _____ in. H_2O

Inlet Flow Rate: 32500 ACFM

Moisture Content: _____ grams of water/cubic feet (ft^3) of dry air

Dew Point Temperature of Process Stream: _____ °F

Operating Schedule

Normal: 24 hours/day 7 days/week 52 weeks/yr

Maximum: 24 hours/day 7 days/week 52 weeks/yr

Section E - Authorization/Signature

I hereby certify that all information contained herein and information submitted with this application is true and correct.

Preparer Info

Signature: Michael DiCostanzo Date: 4/30/2014

Name: Michael DiCostanzo

Title: Manager

Company Name: ENVIRON Int'l Corp.

Phone #: (213) 943-6353 Fax #: (213) 943-6301

Email: mdicostanzo@environcorp.com

Contact Info

Name: Ed Mopas

Title: Env. Manager

Company Name: Exide Technologies

Phone #: (323) 262-1101 Fax #: (323) 262-0642

Email: ed.mopas@exide.com

THIS IS A PUBLIC DOCUMENT

Pursuant to the California Public Records Act, your permit application and any supplemental documentation are public records and may be disclosed to a third party. If you wish to claim certain limited information as exempt from disclosure because it qualifies as a trade secret, as defined in the District's Guidelines for Implementing the California Public Records Act, you must make such claim at the time of submittal to the District.

Check here if you claim that this form or its attachments contain confidential trade secret information. ☐

© South Coast Air Quality Management District, Form 400-E-1a (2008.09)

South Coast Air Quality Management District

Form 400-E-2a
Gaseous Emission Control Form
Afterburner/Oxidizer

This form must be accompanied by a completed Application for a Permit to Construct/Operate - Forms 400-A, Form 400-CEQA, and Form 400-PS.

Blast Furnace Afterburner

Mail To:
SCAQMD
P.O. Box 4944
Diamond Bar, CA 91765-0944

Tel: (909) 396-3385
www.aqmd.gov

Section A - Operator Information

Facility Name (Business Name of Operator That Appears On Permit): Exide Technologies

Valid AQMD Facility ID (Available On Permit Or Invoice Issued By AQMD): 124838

Address where the equipment will be operated (for equipment which will be moved to various location in AQMD's jurisdiction, please list the initial location site): 2700 S. Indiana Street, Vernon, CA 90058

(●) Fixed Location ( ) Various Locations

Section B - Equipment Description

Equipment

Manufacturer: _____ Model No.: _____

Type

( ) Catalytic Oxidizer
( ) Thermal (direct fired) Oxidizer
( ) Recuperative Oxidizer w/ Heat Exchanger (Catalytic)
( ) Recuperative Oxidizer w/ Heat Exchanger (Thermal)
( ) Regenerative Thermal Oxidizer (RTO) - Number of Chambers: _____

Is a concentrator for VOC part of the design? ( ) No ( ) Yes If Yes, also complete 400-E-2b.

For Regenerative Oxidizer, choose type of media:
( ) Ceramic Saddles ( ) Monolith
( ) Other _____

For Recuperative Oxidizer, choose type of heat exchanger:
( ) Shell and Tube ( ) Plate
( ) Other _____

For Catalytic Oxidizer

Catalyst Manufacturer: _____

Type of Catalyst: ( ) Low Temperature Catalyst ( ) Commercial Noble Metal ( ) Other _____

Estimated Catalyst Life: _____ years Catalyst Cleaning Frequency: _____ months

Method of Cleaning: _____

Does the process emit any of the following potential catalyst masking agent or deactivators? ( ) No ( ) Yes
If Yes, check the type(s):

☐ Halogens ☐ Heavy Metals ☐ Silicones ☐ Sulfur Compounds ☐ Particulate Matter
☐ PCBTF ☐ Phosphorous Compounds ☐ Other _____

Type of Burners and Fuel

☒ Natural Gas Fired	No. of Burners: 1	☐ Other: _____
Rating: 10,000,000 BTU/hr	Rating: 10,000,000 BTU/hr per burner	Rating: _____ BTU/hr

Manufacturer: _____ Model: _____

Manufacturer's Emission Guarantee for Burners:

NOx: _____ ppm @ _____ %O_2 CO: _____ ppm @ _____ %O_2

Combustion Air Blower: Flow Rate: _____ SCFM Horsepower: 20 HP

Design Criteria

Retention time at normal operating temperature: _____ secs @ _____ °F

Combustion Chamber Volume: _____ cubic feet (ft^3) Design Gas Flow: 40000 SCFM

Pre-Treatment Device

Is a pre-treatment device present? ( ) Yes (●) No

If Yes, indicate type:

☐ Cyclone ☐ Precooler ☐ Preheater ☐ Knock-Out Chamber ☐ Baghouse
☐ Inline Filters (Pressure drop of clean filters: _____ in. H_2O) ☐ Other: _____

Dimensions of pre-treatment device:

W _____ in. x L _____ in. x H _____ in. or Diameter _____ in. x H _____ in.

© South Coast Air Quality Management District, Form 400-E-2a (2009.04)

South Coast Air Quality Management District

Form 400-E-2a
Gaseous Emission Control Form
Afterburner/Oxidizer

This form must be accompanied by a completed Application for a Permit to Construct/Operate - Forms 400-A, Form 400-CEQA, and Form 400-PS.

Section B - Equipment Description (cont.)

Auxiliary Fuel Data (e.g. gas injection, duct burner)

Auxiliary fuel available? ◉ No ○ Yes If Yes, indicate type: _____

Fuel Usage: ○ Cubic Feet Per Hour (ft^3/hr) ○ Gallons/Hour (gal/hr)

Maximum	Minimum	Average

Exhaust Blower

Rating: 250 HP Flow Capacity: _____ SCFM Draft: ○ Forced ○ Induced

Section C - Process Stream Characteristics

Brief Description of Process

Please attach a process flow diagram and engineering drawing of the process and the control system configuration. In the space provided, indicate what equipment is vented to the control equipment.

Existing Device ID C44 (Blast Furnace Afterburner) will be modified by connecting it to D133 (Blast Furnace Thimble) and replacing the existing burner with an oxy-air-fuel burner

Emission Data

Air Contaminant	Concentration (ppmv)	Destruction Efficiency (%)

Instrumentation

Describe instrumentation for measuring temperature, pressure drop and other operating parameter (attach description, if necessary):

Bakeout or Burnout Process

Is bakeout a feature of the process? ○ Yes ○ No

Operating Conditions

	Maximum	Minimum	Average
Operating Temperature (°F):	2400		
Exit Gas Temperature (°F):	400		

Operating Schedule

Normal:	24 hours/day	7 days/week	52 weeks/yr
Maximum:	24 hours/day	7 days/week	52 weeks/yr

Section D - Authorization/Signature

I hereby certify that all information contained herein and information submitted with this application is true and correct.

Preparer Info

Signature: Michael DiCostanzo Date: 4/12/2011

Title: Manager Company Name: ENVIRON Int'l Corp.

Name: Michael DiCostanzo

Phone #: (213) 943-6353 Fax #: (213) 943-6301

Email: mdicostanzo@environcorp.com

Contact Info

Name: Ed Mopas

Title: Env. Manager Company Name: Exide Technologies

Phone #: (323) 262-1101 Fax #: (323) 262-0642

Email: ed.mopas@exide.com

THIS IS A PUBLIC DOCUMENT

Pursuant to the California Public Records Act, your permit application and any supplemental documentation are public records and may be disclosed to a third party. If you wish to claim certain limited information as exempt from disclosure because it qualifies as a trade secret, as defined in the District's Guidelines for Implementing the California Public Records Act, you must make such claim at the time of submittal to the District.

Check here if you claim that this form or its attachments contain confidential trade secret information. ☐

© South Coast Air Quality Management District, Form 400-E-2a (2009.04)

South Coast Air Quality Management District

Form 400-E-3
Scrubber

New Tray Scrubber

Mail To:
SCAQMD
P.O. Box 4944
Diamond Bar, CA 91765-0944

Tel: (909) 396-3385
www.aqmd.gov

This form must be accompanied by a completed Application for a Permit to Construct/Operate - Forms 400-A, Form 400-CEQA, and Form 400-PS.

Section A - Operator Information

Facility Name (Business Name of Operator That Appears On Permit): Exide Technologies

Valid AQMD Facility ID (Available On Permit Or Invoice Issued By AQMD): 124838

Address where the equipment will be operated (for equipment which will be moved to various location in AQMD's jurisdiction, please list the initial location site): 2700 S. Indiana Street, Vernon, CA 90058

(●) Fixed Location ( ) Various Locations

Section B - Equipment Description

Equipment

Manufacturer: AirPol

Model No.: AirPol BasicTray Absorber

Type

( ) Dry Scrubber

(●) Wet Scrubber: Select Type(s) of Wet Scrubber

[ ] Packed Bed [ ] Orifice [ ] Condensation Scrubbing

[x] Tray/Plate [ ] Spray Chamber

[ ] Venturi: ( ) Wet Approach ( ) Flood Disc ( ) Throat Inlet

Flow Type: ( ) Concurrent ( ) Counter-Current

Configuration: (●) Vertical ( ) Horizontal

Dimension

Height: 35.5 ft. Diameter: 11 ft. Length: ____ ft.

Purpose (To Remove)

( ) Odor ( ) Inorganic Fumes and Gases (type) ____

( ) NOx ( ) Particulate (type) ____

( ) SOx (●) Other arsenic emissions and organic constituents

Components

Packed Bed:

Type of packing material: ____

Manufacturer: ____ Number of Transfer Unit (NTUs): ____

Packing Factor: ____ Height of Transfer Units (HTU): ____ ft.

Packing Size: ____ Pressure Drop: ____ in. H_2O/ft.

Height of Packing Material: ____ ft. Bed Face Dimensions: ____ ft^2

Venturi:

Throat Diameter: ____ in. Throat Length: ____ in.

Pressure Drop Across Throat: ____ in. of water Throat Velocity: ____ ft./min

Contacting Rate Power (hp/1000 scfm): ____ Drop Diameter: ____ microns

Scrubbing Liquid Medium

Scrubbing Liquor Composition	Weight %

Temperature: ____ °F

Blown-Down Rate: ____ gpm

Feed Rate: ____ gpm

Make-Up Rate: ____ gpm

Scrubbing Solution: ( ) Once Through ( ) Recirculated

Ph of Scrubbing Medium (range): ____ – ____

Auto Caustic Injection? ( ) Yes ( ) No

Ph Meter Present? ( ) Yes ( ) No

Pump HP: ____ Stand By Pump H.P.: ____ Size of Recirculation Tank: ____ gal

Exhaust System

HP ____ Flow Rate: 55000 ACFM

© South Coast Air Quality Management District, Form 400-E-3 (2009.04)

South Coast Air Quality Management District

Form 400-E-3
Scrubber

This form must be accompanied by a completed Application for a Permit to Construct/Operate - Forms 400-A, Form 400-CEQA, and Form 400-PS.

Section B - Equipment Description (cont.)

Pre-Treatment

Describe any pre-treatment and gas stream conditioning processes (e.g. gas cooling, gas reheating, gas humidification). Also describe equipment vented to this scrubber.

Prior to entering the tray scrubber, the gas stream will first pass through an afterburner, tube cooler, heat exchanger, cyclone, and baghouse, and venturi scrubber

Is a mist eliminator present to the inlet to the scrubber? ○ Yes ◉ No

If Yes, Type:_____ Model #:_____

Pressure Drop:_____ in. of water

Section C - Waste Gas Stream Characteristics

Brief Description of Process

Please supply an assembly drawing, dimensioned to scale, to show clearly the operation of the control system, including all equipment vented.

Waste Gas Stream

Gas Flow Rate (maximum):_____ ACFM Gas Flow Rate (expected): 55000 ACFM Inlet Pressure:_____ psia

Temperature Inlet:_____ °F Temperature Outlet:_____ °F

Operating Parameters

Pressure Drop Across Scrubber:_____ in. of water Aerodynamic Particle Diameter:_____ microns

Post Treatment

Present at the outlet to the scrubber? ◉ Yes ○ No

If Yes, indicate type: ◉ Mist Eliminator ○ High Efficiency Particulate Arrestors (HEPA)

○ Other_____

Model #:_____ Pressure Drop:_____ in. of water

Instrumentation

Describe instrumentation data for measuring flow, pressure drop, audible alarms, and other operating parameters (attach description, if necessary):

Operating Schedule

Normal:	24 hours/day	7 days/week	52 weeks/yr
Maximum:	24 hours/day	7 days/week	52 weeks/yr

Section D - Authorization/Signature

I hereby certify that all information contained herein and information submitted with this application is true and correct.

Preparer Info

Signature: Michael DiCostanzo Date: 4/1/2014

Title: Manager Company Name: ENVIRON Int' Corp.

Name: Michael DiCostanzo

Phone #: (213) 943-6353 Fax #: (213) 943-6301

Email: mdicostanzo@environcorp.com

Contact Info

Name: Ed Mopas

Title: Env. Manager Company Name: Exide Technologies

Phone #: (323) 262-1101 Fax #: (323) 262-0642

Email: ed.mopas@exide.com

THIS IS A PUBLIC DOCUMENT

Pursuant to the California Public Records Act, your permit application and any supplemental documentation are public records and may be disclosed to a third party. If you wish to claim certain limited information as exempt from disclosure because it qualifies as a trade secret, as defined in the District's Guidelines for Implementing the California Public Records Act, you must make such claim at the time of submittal to the District.

Check here if you claim that this form or its attachments contain confidential trade secret information. ☐

© South Coast Air Quality Management District, Form 400-E-3 (2009.04)

South Coast Air Quality Management District

Form 400-E-3
Scrubber

New Venturi Scrubber

Mail To:
SCAQMD
P.O. Box 4944
Diamond Bar, CA 91765-0944

Tel: (909) 396-3385
www.aqmd.gov

This form must be accompanied by a completed Application for a Permit to Construct/Operate - Forms 400-A, Form 400-CEQA, and Form 400-PS.

Section A - Operator Information

Facility Name (Business Name of Operator That Appears On Permit): Exide Technologies

Valid AQMD Facility ID (Available On Permit Or Invoice Issued By AQMD): 124838

Address where the equipment will be operated (for equipment which will be moved to various location in AQMD's jurisdiction, please list the initial location site):
2700 S. Indiana Street, Vernon, CA 90058

(●) Fixed Location ( ) Various Locations

Section B - Equipment Description

Equipment

Manufacturer: AirPol

Model No.: AirPol Basic (C-B) Venturi

Type

( ) Dry Scrubber

(●) Wet Scrubber: Select Type(s) of Wet Scrubber

- [ ] Packed Bed
- [ ] Orifice
- [ ] Condensation Scrubbing
- [ ] Tray/Plate
- [ ] Spray Chamber
- [x] Venturi: ( ) Wet Approach ( ) Flood Disc (●) Throat Inlet

Flow Type: ( ) Concurrent ( ) Counter-Current

Configuration: (●) Vertical ( ) Horizontal

Dimension

Height: 17 ft. Diameter: 4.75 ft. Length: ____ ft.

Purpose (To Remove)

( ) Odor ( ) Inorganic Fumes and Gases (type) ____

( ) NOx ( ) Particulate (type) ____

( ) SOx (●) Other arsenic emissions and organic constituents

Components

Packed Bed:

Type of packing material: ____

Manufacturer: ____ Number of Transfer Unit (NTUs): ____

Packing Factor: ____ Height of Transfer Units (HTU): ____ ft.

Packing Size: ____ Pressure Drop: ____ in. H_2O/ft.

Height of Packing Material: ____ ft. Bed Face Dimensions: ____ ft^2

Venturi:

Throat Diameter: 7.75 in. Throat Length: ____ in.

Pressure Drop Across Throat: ____ in. of water Throat Velocity: ____ ft./min

Contacting Rate Power (hp/1000 scfm): ____ Drop Diameter: ____ microns

Scrubbing Liquid Medium

Scrubbing Liquor Composition	Weight %

Temperature: ____ °F

Blown-Down Rate: ____ gpm

Feed Rate: ____ gpm

Make-Up Rate: ____ gpm

Scrubbing Solution: ( ) Once Through ( ) Recirculated

Ph of Scrubbing Medium (range): ____ – ____

Auto Caustic Injection? ( ) Yes ( ) No

Ph Meter Present? ( ) Yes ( ) No

Pump HP: ____ Stand By Pump H.P.: ____ Size of Recirculation Tank: ____ gal

Exhaust System

HP ____ Flow Rate: 55000 ACFM

© South Coast Air Quality Management District, Form 400-E-3 (2009.04)

South Coast Air Quality Management District

Form 400-E-3
Scrubber

This form must be accompanied by a completed Application for a Permit to Construct/Operate - Forms 400-A, Form 400-CEQA, and Form 400-PS.

Section B - Equipment Description (cont.)

Pre-Treatment

Describe any pre-treatment and gas stream conditioning processes (e.g. gas cooling, gas reheating, gas humidification). Also describe equipment vented to this scrubber.

Prior to entering the Venturi scrubber, the gas stream will first pass through an afterburner, tube cooler, heat exchanger, cyclone, and baghouse.

Is a mist eliminator present to the inlet to the scrubber? ○ Yes ◉ No

If Yes, Type:_____ Model #:_____

Pressure Drop:_____ in. of water

Section C - Waste Gas Stream Characteristics

Brief Description of Process

Please supply an assembly drawing, dimensioned to scale, to show clearly the operation of the control system, including all equipment vented.

Waste Gas Stream

Gas Flow Rate (maximum):_____ ACFM Gas Flow Rate (expected): 55000 ACFM Inlet Pressure:_____ psia

Temperature Inlet:_____ °F Temperature Outlet:_____ °F

Operating Parameters

Pressure Drop Across Scrubber:_____ in. of water Aerodynamic Particle Diameter:_____ microns

Post Treatment

Present at the outlet to the scrubber? ○ Yes ◉ No

If Yes, indicate type: ○ Mist Eliminator ○ High Efficiency Particulate Arrestors (HEPA)

○ Other_____

Model #:_____ Pressure Drop:_____ in. of water

Instrumentation

Describe instrumentation data for measuring flow, pressure drop, audible alarms, and other operating parameters (attach description, if necessary):

Operating Schedule

Normal:	24 hours/day	7 days/week	52 weeks/yr
Maximum:	24 hours/day	7 days/week	52 weeks/yr

Section D - Authorization/Signature

I hereby certify that all information contained herein and information submitted with this application is true and correct.

Preparer Info

Signature: Michael DiCostanzo Date: 4/10/2014

Title: Manager Company Name: ENVIRON Int' Corp.

Name: Michael DiCostanzo

Phone #: (213) 943-6353 Fax #: (213) 943-6301

Email: mdicostanzo@environcorp.com

Contact Info

Name: Ed Mopas

Title: Env. Manager Company Name: Exide Technologies

Phone #: (323) 262-1101 Fax #: (323) 262-0642

Email: ed.mopas@exide.com

THIS IS A PUBLIC DOCUMENT

Pursuant to the California Public Records Act, your permit application and any supplemental documentation are public records and may be disclosed to a third party. If you wish to claim certain limited information as exempt from disclosure because it qualifies as a trade secret, as defined in the District's Guidelines for Implementing the California Public Records Act, you must make such claim at the time of submittal to the District.

Check here if you claim that this form or its attachments contain confidential trade secret information. ☐

© South Coast Air Quality Management District, Form 400-E-3 (2009.04)

C456-BH

South Coast Air Quality Management District

Form 400-E-1a
Particulate Matter Control
Fabric Filter (Baghouse)/Cartridge Collector

This form must be accompanied by a completed Application for a Permit to Construct/Operate - Forms 400-A, Form 400-CEQA, and Form 400-PS.

Mail To:
SCAQMD
P.O. Box 4944
Diamond Bar, CA 91765-0944
Tel: (909) 396-3385
www.aqmd.gov

Section A - Operator Information

Facility Name (Business Name of Operator That Appears On Permit): Exide Technologies

Valid AQMD Facility ID (Available On Permit Or Invoice Issued By AQMD): 124838

Address where the equipment will be operated (for equipment which will be moved to various location in AQMD's jurisdiction, please list the initial location site): 2700 S. Indiana Street, Vernon, CA 90058

(●) Fixed Location ( ) Various Locations

Section B - Equipment Description (Complete Part I or Part II)

Equipment	Manufacturer: MAC Model No.: 144MCF494
Part I: For Fabric Filters	
Bag Material	( ) Nomex® ( ) Nylon ( ) Polyester ( ) Acrylics ( ) Fiber Glass ( ) Cotton ( ) Teflon® (●) PFTE Membrane Laminated ( ) Textratex® ( ) Other_____
Bag Dimensions	Number of Bags: 494 Bag Length: 12 sq. ft. Bag Diameter: 0.42 ft. Total Filter Area:_____ sq. ft. Designed Air to Filter Ratio:_____ : 1
Part II: For Cartridge Filters	
Cartridge Dimensions	Number of Cartridges:_____ Total Filter Area:_____ sq. ft. Designed Air to Filter Ratio:_____ : 1 Size of Each Cartridge: Diameter_____ ft. Length_____ ft. Material:

Section C - Device And Method

Dust Collection Device	( ) Pneumatic ( ) Drag Conveyor ( ) Closed Container ( ) Rotary Airlock Values ( ) Double Dump ( ) Screw Conveyors ( ) Manual Discharge Device: ( ) Slide Gate ( ) Hinged Doors or Drawers
Cleaning Method	(●) Pulse Jet ( ) Reverse Air (If Reverse Air, Is it: ( ) Online or ( ) Offline) ( ) Mechanical Shaker ( ) Other_____
Blower	Blower Horsepower: 150 H.P. Design Flow Rate:_____ SCFM Draft: ( ) Forced ( ) Induced
Design Criteria	Baghouse Configuration: ( ) Positive Pressure ( ) Negative Pressure
Pre-Treatment Device	☐ Cyclone ☐ Precooler ☐ Preheater ☐ Knock-Out Chamber ☐ HEPA ☒ None
Post-Treatment Device	☒ HEPA ☐ Afterburner ☐ Other:_____

© South Coast Air Quality Management District, Form 400-E-1a (2009.04)

C156 - HEPA

South Coast Air Quality Management District

Form 400-E-1a
Particulate Matter Control
Fabric Filter (Baghouse)/Cartridge Collector

This form must be accompanied by a completed Application for a Permit to Construct/Operate - Forms 400-A, Form 400-CEQA, and Form 400-PS.

Mail To:
SCAQMD
P.O. Box 4944
Diamond Bar, CA 91765-0944

Tel: (909) 396-3385
www.aqmd.gov

Section A - Operator Information

Facility Name (Business Name of Operator That Appears On Permit): Exide Technologies

Valid AQMD Facility ID (Available On Permit Or Invoice Issued By AQMD): 124838

Address where the equipment will be operated (for equipment which will be moved to various location in AQMD's jurisdiction, please list the initial location site): 2700 S. Indiana Street, Vernon, CA 90058

(•) Fixed Location ( ) Various Locations

Section B - Equipment Description (Complete Part I or Part II)

Equipment	Manufacturer: Burke Equiflo; Model No.: M-Series

Part I: For Fabric Filters

Bag Material	( ) Nomex® ( ) Nylon ( ) Polyester ( ) Acrylics ( ) Fiber Glass ( ) Cotton ( ) Teflon® ( ) PFTE Membrane Laminated ( ) Textratex® ( ) Other_____
Bag Dimensions	Number of Bags:_____ Bag Length:_____sq. ft. Bag Diameter:_____ft. Total Filter Area:_____sq. ft. Designed Air to Filter Ratio:_____: 1

Part II: For Cartridge Filters

Cartridge Dimensions	Number of Cartridges:_____ Total Filter Area:_____sq. ft. Designed Air to Filter Ratio:_____: 1 Size of Each Cartridge: Diameter_____ft. Length_____ft. Material: 24" x 24" x 12" HEPA filters with 24" x 24" x 2" pre-filters rated for 55,000 CFM

Section C - Device And Method

Dust Collection Device	( ) Pneumatic ( ) Drag Conveyor ( ) Closed Container ( ) Rotary Airlock Values ( ) Double Dump ( ) Screw Conveyors ( ) Manual Discharge Device: ( ) Slide Gate ( ) Hinged Doors or Drawers
Cleaning Method	( ) Pulse Jet ( ) Reverse Air (If Reverse Air, Is it: ( ) Online or ( ) Offline) ( ) Mechanical Shaker (•) Other_____
Blower	Blower Horsepower:_____H.P. Design Flow Rate:_____SCFM Draft: ( ) Forced ( ) Induced
Design Criteria	Baghouse Configuration: ( ) Positive Pressure ( ) Negative Pressure
Pre-Treatment Device	☐ Cyclone ☐ Precooler ☐ Preheater ☐ Knock-Out Chamber ☐ HEPA ☒ None
Post-Treatment Device	☒ HEPA ☐ Afterburner ☐ Other:_____

© South Coast Air Quality Management District, Form 400-E-1a (2009.04)

C157-BH

South Coast Air Quality Management District

Form 400-E-1a
Particulate Matter Control
Fabric Filter (Baghouse)/Cartridge Collector

This form must be accompanied by a completed Application for a Permit to Construct/Operate - Forms 400-A, Form 400-CEQA, and Form 400-PS.

Mail To:
SCAQMD
P.O. Box 4944
Diamond Bar, CA 91765-0944

Tel: (909) 396-3385
www.aqmd.gov

Section A - Operator Information

Facility Name (Business Name of Operator That Appears On Permit): Exide Technologies

Valid AQMD Facility ID (Available On Permit Or Invoice Issued By AQMD): 124838

Address where the equipment will be operated (for equipment which will be moved to various location in AQMD's jurisdiction, please list the initial location site): 2700 S. Indiana Street, Vernon, CA 90058

(•) Fixed Location ( ) Various Locations

Section B - Equipment Description (Complete Part I or Part II)

Equipment	Manufacturer: MAC Model No.: 144MCF494
Part I: For Fabric Filters	
Bag Material	( ) Nomex® ( ) Nylon ( ) Polyester ( ) Acrylics ( ) Fiber Glass ( ) Cotton ( ) Teflon® (•) PFTE Membrane Laminated ( ) Textratex® ( ) Other_____
Bag Dimensions	Number of Bags: 494 Bag Length: 12 sq. ft. Bag Diameter: 0.42 ft. Total Filter Area:_____ sq. ft. Designed Air to Filter Ratio:_____: 1
Part II: For Cartridge Filters	
Cartridge Dimensions	Number of Cartridges:_____ Total Filter Area:_____ sq. ft. Designed Air to Filter Ratio:_____: 1 Size of Each Cartridge: Diameter_____ ft. Length_____ ft. Material:

Section C - Device And Method

Dust Collection Device	( ) Pneumatic ( ) Drag Conveyor ( ) Closed Container ( ) Rotary Airlock Values ( ) Double Dump ( ) Screw Conveyors ( ) Manual Discharge Device: ( ) Slide Gate ( ) Hinged Doors or Drawers
Cleaning Method	(•) Pulse Jet ( ) Reverse Air (If Reverse Air, Is it: ( ) Online or ( ) Offline) ( ) Mechanical Shaker ( ) Other_____
Blower	Blower Horsepower: 150 H.P. Design Flow Rate:_____ SCFM Draft: ( ) Forced ( ) Induced
Design Criteria	Baghouse Configuration: ( ) Positive Pressure ( ) Negative Pressure
Pre-Treatment Device	☐ Cyclone ☐ Precooler ☐ Preheater ☐ Knock-Out Chamber ☐ HEPA ☒ None
Post-Treatment Device	☒ HEPA ☐ Afterburner ☐ Other:_____

© South Coast Air Quality Management District, Form 400-E-1a (2009.04)

C157-HEPA

South Coast Air Quality Management District

Form 400-E-1a
Particulate Matter Control
Fabric Filter (Baghouse)/Cartridge Collector

This form must be accompanied by a completed Application for a Permit to Construct/Operate - Forms 400-A, Form 400-CEQA, and Form 400-PS.

Mail To:
SCAQMD
P.O. Box 4944
Diamond Bar, CA 91765-0944
Tel: (909) 396-3385
www.aqmd.gov

Section A - Operator Information

Facility Name (Business Name of Operator That Appears On Permit): Exide Technologies

Valid AQMD Facility ID (Available On Permit Or Invoice Issued By AQMD): 124838

Address where the equipment will be operated (for equipment which will be moved to various location in AQMD's jurisdiction, please list the initial location site): 2700 S. Indiana Street, Vernon, CA 90058

(•) Fixed Location ( ) Various Locations

Section B - Equipment Description (Complete Part I or Part II)

Equipment	Manufacturer: Burke Equiflo Model No.: M-Series
Part I: For Fabric Filters	
Bag Material	( ) Nomex® ( ) Nylon ( ) Polyester ( ) Acrylics ( ) Fiber Glass ( ) Cotton ( ) Teflon® ( ) PFTE Membrane Laminated ( ) Textratex® ( ) Other_____
Bag Dimensions	Number of Bags:_____ Bag Length:_____sq. ft. Bag Diameter:_____ft. Total Filter Area:_____sq. ft. Designed Air to Filter Ratio:_____: 1
Part II: For Cartridge Filters	
Cartridge Dimensions	Number of Cartridges:_____ Total Filter Area:_____sq. ft. Designed Air to Filter Ratio:_____: 1 Size of Each Cartridge: Diameter_____ft. Length_____ft. Material: 24" x 24" x 12" HEPA filters with 24" x 24" x 2" pre-filters rated for 55,000 CFM

Section C - Device And Method

Dust Collection Device	( ) Pneumatic ( ) Drag Conveyor ( ) Closed Container ( ) Rotary Airlock Values ( ) Double Dump ( ) Screw Conveyors ( ) Manual Discharge Device: ( ) Slide Gate ( ) Hinged Doors or Drawers
Cleaning Method	( ) Pulse Jet ( ) Reverse Air (If Reverse Air, Is it: ( ) Online or ( ) Offline) ( ) Mechanical Shaker (•) Other_____
Blower	Blower Horsepower:_____H.P. Design Flow Rate:_____SCFM Draft: ( ) Forced ( ) Induced
Design Criteria	Baghouse Configuration: ( ) Positive Pressure ( ) Negative Pressure
Pre-Treatment Device	☐ Cyclone ☐ Precooler ☐ Preheater ☐ Knock-Out Chamber ☐ HEPA ☒ None
Post-Treatment Device	☒ HEPA ☐ Afterburner ☐ Other:_____

© South Coast Air Quality Management District, Form 400-E-1a (2009.04)

XPP

South Coast Air Quality Management District

Form 400-A
Application Form for Permit or Plan Approval

List only one piece of equipment or process per form.

Mail To:
SCAQMD
P.O. Box 4944
Diamond Bar, CA 91765-0944
Tel: (909) 396-3385
www.aqmd.gov

Section A - Operator Information

1. Facility Name (Business Name of Operator to Appear on the Permit): Exide Technologies

2. Valid AQMD Facility ID (Available On Permit Or Invoice Issued By AQMD): 124838

3. Owner's Business Name (If different from Business Name of Operator):

Section B - Equipment Location Address

4. Equipment Location Is: (●) Fixed Location ( ) Various Location
(For equipment operated at various locations, provide address of initial site.)

Street Address: 2700 S. Indiana Street
City: Vernon, CA Zip: 90058
Contact Name: Ed Mopas Title: Environmental Manager
Phone #: (323) 262-1101 Ext. 259 Fax #: (323) 262-0642
E-Mail: ed.mopas@exide.com

Section C - Permit Mailing Address

5. Permit and Correspondence Information:
[X] Check here if same as equipment location address

Address: 2700 S. Indiana Street
City: Vernon State: CA Zip: 90058
Contact Name: Ed Mopas Title: Environmental Manager
Phone #: (323) 262-1101 Ext. 259 Fax #: (323) 262-0642
E-Mail: ed.mopas@exide.com

Section D - Application Type

6. The Facility Is: ( ) Not In RECLAIM or Title V ( ) In RECLAIM ( ) In Title V (●) In RECLAIM & Title V Programs

7. Reason for Submitting Application (Select only ONE):

7a. New Equipment or Process Application:
- ( ) New Construction (Permit to Construct)
- ( ) Equipment On-Site But Not Constructed or Operational
- ( ) Equipment Operating Without A Permit *
- ( ) Compliance Plan
- ( ) Registration/Certification
- ( ) Streamlined Standard Permit

7b. Facility Permits:
- ( ) Title V Application or Amendment (Refer to Title V Matrix)
- ( ) RECLAIM Facility Permit Amendment

7c. Equipment or Process with an Existing/Previous Application or Permit:
- ( ) Administrative Change
- (●) Alteration/Modification 50
- ( ) Alteration/Modification without Prior Approval *
- ( ) Change of Condition
- ( ) Change of Condition without Prior Approval *
- ( ) Change of Location
- ( ) Change of Location without Prior Approval *
- ( ) Equipment Operating with an Expired/Inactive Permit *

Existing or Previous Permit/Application
If you checked any of the items in 7c., you MUST provide an existing Permit or Application Number: 520501
G2077(

* A Higher Permit Processing Fee and additional Annual Operating Fees (up to 3 full years) may apply (Rule 301(c)(1)(D)(i)).

8a. Estimated Start Date of Construction (mm/dd/yyyy): 02/16/2014
8b. Estimated End Date of Construction (mm/dd/yyyy): 02/28/2014
8c. Estimated Start Date of Operation (mm/dd/yyyy): 03/01/2014

9. Description of Equipment or Reason for Compliance Plan (list applicable rule):
Add an RTO to the outlet of the HEPA filter (C184) of rotary dryer APC train.

10. For identical equipment, how many additional applications are being submitted with this application? (Form 400-A required for each equipment / process): 0

11. Are you a Small Business as per AQMD's Rule 102 definition? (10 employees or less and total gross receipts are $500,000 or less OR a not-for-profit training center) (●) No ( ) Yes

12. Has a Notice of Violation (NOV) or a Notice to Comply (NC) been issued for this equipment? (●) No ( ) Yes
If Yes, provide NOV/NC#:

Section E - Facility Business Information

13. What type of business is being conducted at this equipment location? Secondary lead smelter

14. What is your business primary NAICS Code? (North American Industrial Classification System) 331492

15. Are there other facilities in the SCAQMD jurisdiction operated by the same operator? ( ) No (●) Yes

16. Are there any schools (K-12) within 1000 feet of the facility property line? (●) No ( ) Yes

Section F - Authorization/Signature

I hereby certify that all information contained herein and information submitted with this application are true and correct.

17. Signature of Responsible Official: J. Hogarth

18. Title of Responsible Official: Plant Manager

19. I wish to review the permit prior to issuance. (This may cause a delay in the application process.) ( ) No ( ) Yes

20. Print Name: John Hogarth

21. Date: 1/8/14.

22. Do you claim confidentiality of data? (If Yes, see instructions.) ( ) No (●) Yes

23. Check List: [X] Authorized Signature/Date [X] Form 400-CEQA [X] Supplemental Form(s) (ie., Form 400-E-xx) [X] Fees Enclosed

AQMD USE ONLY	APPLICATION TRACKING #	CHECK #	AMOUNT RECEIVED	PAYMENT TRACKING #	VALIDATION
	624499	111473	$ 12440.79		1/9/14

DATE	APP REJ	DATE	APP REJ	CLASS I III	BASIC CONTROL	EQUIPMENT CATEGORY CODE	TEAM	ENGINEER	REASON/ACTION TAKEN

© South Coast Air Quality Management District, Form 400-A (2012.07)

(113311)

N dellinger

South Coast Air Quality Management District

Form 400-E-2a
Gaseous Emission Control Form
Afterburner/Oxidizer

This form must be accompanied by a completed Application for a Permit to Construct/Operate - Forms 400-A, Form 400-CEQA, and Form 400-PS.

Mail To:
SCAQMD
P.O. Box 4944
Diamond Bar, CA 91765-0944
Tel: (909) 396-3385
www.aqmd.gov

Section A - Operator Information

Facility Name (Business Name of Operator That Appears On Permit): Exide Technologies

Valid AQMD Facility ID (Available On Permit Or Invoice Issued By AQMD): 124838

Address where the equipment will be operated (for equipment which will be moved to various location in AQMD's jurisdiction, please list the initial location site):

2700 S. Indiana Street, Vernon, CA 90058 ◉ Fixed Location ○ Various Locations

Section B - Equipment Description

Equipment

Manufacturer: Adwest Technologies, Inc.

Model No.: RETOX 12.0 RTO97

Type

○ Catalytic Oxidizer
○ Thermal (direct fired) Oxidizer
○ Recuperative Oxidizer w/ Heat Exchanger (Catalytic)
○ Recuperative Oxidizer w/ Heat Exchanger (Thermal)
◉ Regenerative Thermal Oxidizer (RTO) - Number of Chambers: 2

Is a concentrator for VOC part of the design? ◉ No ○ Yes If Yes, also complete 400-E-2b.

For Regenerative Oxidizer, choose type of media:
○ Ceramic Saddles ○ Monolith
◉ Other silica/alumina

For Recuperative Oxidizer, choose type of heat exchanger:
○ Shell and Tube ○ Plate
○ Other

For Catalytic Oxidizer

Catalyst Manufacturer:

Type of Catalyst: ○ Low Temperature Catalyst ○ Commercial Noble Metal ○ Other

Estimated Catalyst Life: years Catalyst Cleaning Frequency: months

Method of Cleaning:

Does the process emit any of the following potential catalyst masking agent or deactivators? ○ No ○ Yes
If Yes, check the type(s):

☐ Halogens ☐ Heavy Metals ☐ Silicones ☐ Sulfur Compounds ☐ Particulate Matter
☐ PCBTF ☐ Phosphorous Compounds ☐ Other

Type of Burners and Fuel

☒ Natural Gas Fired — Rating: BTU/hr
No. of Burners: 1 — Rating: BTU/hr per burner
☐ Other: — Rating: BTU/hr

Manufacturer: Maxon Model:

Manufacturer's Emission Guarantee for Burners:

NOx: 1.71 ppm @ 3 %O_2 CO: ppm @ %O_2

Combustion Air Blower: Flow Rate: SCFM Horsepower: 7.5 HP

Design Criteria

Retention time at normal operating temperature: secs @ °F

Combustion Chamber Volume: cubic feet (ft^3) Design Gas Flow: 12000 SCFM

Pre-Treatment Device

Is a pre-treatment device present? ◉ Yes ○ No

If Yes, indicate type:

☒ Cyclone ☐ Precooler ☐ Preheater ☐ Knock-Out Chamber ☒ Baghouse
☐ Inline Filters (Pressure drop of clean filters: in. H_2O) ☒ Other: HEPA

Dimensions of pre-treatment device:

W 24 in. x L 24 in. x H 81 in. or Diameter in. x H in.

© South Coast Air Quality Management District, Form 400-E-2a (2009.04)

EXIDE TECHNOLOGIES

Exide Technologies
L.A. Recycling
2700 S. Indiana Street
Vernon, CA 90058

1.323.262.1101 tel
1.323.269.1906 fax
www.exideworld.com

January 8, 2014

Permit Services
South Coast Air Quality Management District
21865 Copley Drive
Diamond Bar, CA 91765-4182

Re: Applications for Permit Modifications to the Rotary Dryer Air Pollution Control Train and the Reverberatory Furnace at Exide Technologies (SCAQMD ID #124838)

To Whom It May Concern:

Enclosed please find the Exide Technologies (Exide) permit application as prepared by ENVIRON International Corporation (ENVIRON) for submittal to the South Coast Air Quality Management District (SCAQMD) for the modification of the reverberatory furnace (device D119) by replacing two existing permitted ram feeders (D117 and D118) with a new screw feeder system, and the modification of the rotary dryer furnace's air pollution control system (devices C143, C144, and C184, and stack S145) through the addition of a regenerative thermal oxidizer (RTO). The total fees due to the SCAQMD are $17,440.79, per Rule 301, as amended July 1, 2013.

Permit Unit	Rule 301 Equipment Category	Fee Schedule	Total Permit Fees
Addition of a RTO to the Rotary Dryer APC train	Control Systems, four or more in series	E	$5,567.77
Replace two ram feeders with a new screw feeder system to the Reverb Furnace	Furnace, Reverberatory	D	$4,842.82
Expedited Processing	50% of processing fees	--	$5,205.30
Facility Permit Amendment (Title V & RECLAIM)	301 (I)(5)	301 (I)(5)	$1,824.90
Total Permit Fees for Application:			**$17,440.79**

Please note that based on the current configuration of the rotary dryer's air pollution control system already permitted at the facility, we have assumed that the RTO would be assigned its own device ID number but that it would be evaluated as part of the same permit unit (and thus, under the same application number) as the air pollution control system to which it is being connected. Therefore, we are categorizing the application to add this RTO as a permit modification to the associated air pollution control system and have only included one 400-A and permit modification fee to encompass the entire permit unit (cyclone, baghouse, HEPA, RTO, and stack) as noted in the fee table above.

Similarly, we have assumed the new screw feeder would be assigned its own device ID number but that it would be evaluated as part of the same permit unit (and thus, under the same permit

application number) as the reverberatory furnace (and associated equipment) to which it is being connected, and therefore, this application would be categorized as a permit modification of the reverberatory furnace and only requires one 400-A and permit modification fee. A check for the total permit fees is included with the submittal package.

The following materials are included with this submittal:

1. Two Forms 400-A, Application for Equipment Modification (one for permit unit consisting of C143, C144, C184 and S145, and one for the reverb furnace permit unit)
2. One Form 400-E-2a, for the new RTO being installed
3. One Form 400-E-GI, for the new reverb furnace screw feeder system
4. Form 400-A, Application for Title V Permit Amendment
5. Form 400-CEQA, California Environmental Quality Act (CEQA)
6. Form 500-A2, Title V Application Certification
7. Form 500-C1, Title V Compliance Status Report
8. Form 400-XPP, Expedited Permit Processing

If you have questions or concerns regarding this permit application package, please feel free to contact Russell Kemp at 678-388-1654 or Michael DiCostanzo at 213-943-6353.

Very Truly Yours,

John Hogarth
Plant Manager

cc: Fred Ganster (Exide)
Ed Mopas (Exide)
Russell Kemp (ENVIRON)
Michael DiCostanzo (ENVIRON)

Enclosures

P:\E\Exide\SCAQMD Permitting\Dryer RTO & Reverb Screw Feeder\Exide Cvr Ltr to AQMD-Reverb Feed Screw and RTO Dryer.docx [07-21624A]

South Coast Air Quality Management District

Form 400-A

Application Form for Permit or Plan Approval

List only one piece of equipment or process per form.

Mail To:
SCAQMD
P.O. Box 4944
Diamond Bar, CA 91765-0944

Tel: (909) 396-3385
www.aqmd.gov

Section A - Operator Information

1. Facility Name (Business Name of Operator to Appear on the Permit): Exide Technologies

2. Valid AQMD Facility ID (Available On Permit Or Invoice Issued By AQMD): 124838

3. Owner's Business Name (If different from Business Name of Operator):

Section B - Equipment Location Address

4. Equipment Location Is: (•) Fixed Location ( ) Various Location
(For equipment operated at various locations, provide address of initial site.)

Street Address: 2700 S. Indiana Street
City: Vernon, CA Zip: 90058
Contact Name: Ed Mopas Title: Environmental Manager
Phone #: (323) 262-1101 Ext. 259 Fax #: (323) 262-0642
E-Mail: ed.mopas@exide.com

Section C - Permit Mailing Address

5. Permit and Correspondence Information:
[X] Check here if same as equipment location address

Address: 2700 S. Indiana Street
City: Vernon, State: CA Zip: 90058
Contact Name: Ed Mopas Title: Environmental Manager
Phone #: (323) 262-1101 Ext. 259 Fax #: (323) 262-0642
E-Mail: ed.mopas@exide.com

Section D - Application Type

6. The Facility Is: ( ) Not In RECLAIM or Title V ( ) In RECLAIM ( ) In Title V (•) In RECLAIM & Title V Programs

7. Reason for Submitting Application (Select only ONE):

7a. New Equipment or Process Application:
- ( ) New Construction (Permit to Construct)
- ( ) Equipment On-Site But Not Constructed or Operational
- ( ) Equipment Operating Without A Permit *
- ( ) Compliance Plan
- ( ) Registration/Certification
- ( ) Streamlined Standard Permit

7b. Facility Permits:
- ( ) Title V Application or Amendment (Refer to Title V Matrix)
- ( ) RECLAIM Facility Permit Amendment

7c. Equipment or Process with an Existing/Previous Application or Permit:
- ( ) Administrative Change
- ( ) Alteration/Modification
- ( ) Alteration/Modification without Prior Approval *
- (•) Change of Condition
- ( ) Change of Condition without Prior Approval *
- ( ) Change of Location
- ( ) Change of Location without Prior Approval *
- ( ) Equipment Operating with an Expired/Inactive Permit *

Existing or Previous Permit/Application
If you checked any of the items in 7c., you MUST provide an existing Permit or Application Number: 533208

* A Higher Permit Processing Fee and additional Annual Operating Fees (up to 3 full years) may apply (Rule 301(c)(1)(D)(i)).

8a. Estimated Start Date of Construction (mm/dd/yyyy): 09/01/2014
8b. Estimated End Date of Construction (mm/dd/yyyy): 10/15/2014
8c. Estimated Start Date of Operation (mm/dd/yyyy): 10/15/2014

9. Description of Equipment or Reason for Compliance Plan (list applicable rule):
Pot Furnace #4 (D13) change of condition to restrict arsenic addition

10. For Identical equipment, how many additional applications are being submitted with this application? (Form 400-A required for each equipment / process): 11

11. Are you a Small Business as per AQMD's Rule 102 definition? (10 employees or less and total gross receipts are $500,000 or less OR a not-for-profit training center) (•) No ( ) Yes

12. Has a Notice of Violation (NOV) or a Notice to Comply (NC) been issued for this equipment? (•) No ( ) Yes
If Yes, provide NOV/NC#:

Section E - Facility Business Information

13. What type of business is being conducted at this equipment location?
Secondary lead smelter

14. What is your business primary NAICS Code? (North American Industrial Classification System): 331492

15. Are there other facilities in the SCAQMD jurisdiction operated by the same operator? ( ) No (•) Yes

16. Are there any schools (K-12) within 1000 feet of the facility property line? (•) No ( ) Yes

Section F - Authorization/Signature

I hereby certify that all information contained herein and information submitted with this application are true and correct.

17. Signature of Responsible Official: [signature]

18. Title of Responsible Official: Plant Manager

19. I wish to review the permit prior to issuance. (This may cause a delay in the application process.) ( ) No ( ) Yes

20. Print Name: John Hogarth

21. Date: 4/10/14.

22. Do you claim confidentiality of data? (If Yes, see instructions.) ( ) No ( ) Yes

23. Check List: [X] Authorized Signature/Date [X] Form 400-CEQA [X] Supplemental Form(s) (ie., Form 400-E-xx) [X] Fees Enclosed

SCAQMD USE ONLY	APPLICATION TRACKING #	CHECK #	AMOUNT RECEIVED	PAYMENT TRACKING #	VALIDATION
	562499	065075	$ 5056.73	CT 114910	4/10/14

DATE	APP REJ	DATE	APP REJ	CLASS I III	BASIC CONTROL	EQUIPMENT CATEGORY CODE	TEAM	ENGINEER	REASON/ACTION TAKEN

© South Coast Air Quality Management District, Form 400-A (2012.07)

2/18

South Coast Air Quality Management District

Form 400-CEQA
California Environmental Quality Act (CEQA) Applicability

Mail To:
SCAQMD
P.O. Box 4944
Diamond Bar, CA 91765-0944

Tel: (909) 396-3385
www.aqmd.gov

The SCAQMD is required by state law, the California Environmental Quality Act (CEQA), to review discretionary permit project applications for potential air quality and other environmental impacts. This form is a screening tool to assist the SCAQMD in clarifying whether or not the project[1] has the potential to generate significant adverse environmental impacts that might require preparation of a CEQA document [CEQA Guidelines §15060(a)].[2] Refer to the attached instructions for guidance in completing this form.[3] For each Form 400-A application, also complete and submit one Form 400-CEQA. If submitting multiple Form 400-A applications for the same project at the same time, only one 400-CEQA form is necessary for the entire project. If you need assistance completing this form, contact Permit Services at (909) 396-3385 or (909) 396-2668.

Section A - Facility Information

1. **Facility Name** (Business Name of Operator To Appear On The Permit): Exide Technologies

2. **Valid AQMD Facility ID** (Available On Permit Or Invoice Issued By AQMD): 124838

3. **Project Description:**
Modifications/Changes of Condition for 14 Pot Furnaces, Blast Furnace control train, Reverb Furnace control train, Hard Lead Baghouse, Blast Furnace

Section B - Review For Exemption From Further CEQA Action

Check "Yes" or "No" as applicable

	Yes	No	Is this application for:
1.	○	◉	A CEQA and/or NEPA document previously or currently prepared that specifically evaluates this project? If yes, attach a copy of the signed Notice of Determination to this form.
2.	○	◉	A request for a change of permittee only (without equipment modifications)?
3.	○	◉	A functionally identical permit unit replacement with no increase in rating or emissions?
4.	○	◉	A change of daily VOC permit limit to a monthly VOC permit limit?
5.	○	◉	Equipment damaged as a result of a disaster during state of emergency?
6.	○	◉	A Title V (i.e., Regulation XXX) permit renewal (without equipment modifications)?
7.	○	◉	A Title V administrative permit revision?
8.	○	◉	The conversion of an existing permit into an initial Title V permit?

If "Yes" is checked for any question in Section B, your application does not require additional evaluation for CEQA applicability. Skip to Section D - Signatures on page 2 and sign and date this form.

Section C - Review of Impacts Which May Trigger CEQA

Complete Parts I-VI by checking "Yes" or "No" as applicable. To avoid delays in processing your application(s), explain all "Yes" responses on a separate sheet and attach it to this form.

	Yes	No	Part I - General
1.	○	◉	Has this project generated any known public controversy regarding potential adverse impacts that may be generated by the project? Controversy may be construed as concerns raised by local groups at public meetings; adverse media attention such as negative articles in newspapers or other periodical publications, local news programs, environmental justice issues, etc.
2.	○	◉	Is this project part of a larger project? If yes, attach a separate sheet to briefly describe the larger project.
			Part II - Air Quality
3.	○	◉	Will there be any demolition, excavating, and/or grading construction activities that encompass an area exceeding 20,000 square feet?
4.	○	◉	Does this project include the open outdoor storage of dry bulk solid materials that could generate dust? If Yes, include a plot plan with the application package.

[1] A "project" means the whole of an action which has a potential for resulting in physical change to the environment, including construction activities, clearing or grading of land, improvements to existing structures, and activities or equipment involving the issuance of a permit. For example, a project might include installation of a new, or modification of an existing internal combustion engine, dry-cleaning facility, boiler, gas turbine, spray coating booth, solvent cleaning tank, etc.

[2] To download the CEQA guidelines, visit http://ceres.ca.gov/env_law/state.html.

[3] To download this form and the instructions, visit http://www.aqmd.gov/ceqa or http://www.aqmd.gov/permit

© South Coast Air Quality Management District, Form 400-CEQA (2009.04)

Section C - Review of Impacts Which May Trigger CEQA (cont.)			
	Yes	No	**Part II - Air Quality (cont.)**
5.	○	⊙	**Would this project result in noticeable off-site odors from activities that may not be subject to SCAQMD permit requirements?** For example, compost materials or other types of greenwaste (i.e., lawn clippings, tree trimmings, etc.) have the potential to generate odor complaints subject to Rule 402 – Nuisance.
6.	○	⊙	**Does this project cause an increase of emissions from marine vessels, trains and/or airplanes?**
7.	○	⊙	**Will the proposed project increase the QUANTITY of hazardous materials stored aboveground onsite or transported by mobile vehicle to or from the site by greater than or equal to the amounts associated with each compound on the attached Table 1?**[4]
			Part III – Water Resources
8.	○	⊙	**Will the project increase demand for water at the facility by more than 5,000,000 gallons per day?** The following examples identify some, but not all, types of projects that may result in a "yes" answer to this question: 1) projects that generate steam; 2) projects that use water as part of the air pollution control equipment; 3) projects that require water as part of the production process; 4) projects that require new or expansion of existing sewage treatment facilities; 5) projects where water demand exceeds the capacity of the local water purveyor to supply sufficient water for the project; and 6) projects that require new or expansion of existing water supply facilities.
9.	○	⊙	**Will the project require construction of new water conveyance infrastructure?** Examples of such projects are when water demands exceed the capacity of the local water purveyor to supply sufficient water for the project, or require new or modified sewage treatment facilities such that the project requires new water lines, sewage lines, sewage hook-ups, etc.
			Part IV – Transportation/Circulation
10.			**Will the project result in** (Check all that apply):
	○	⊙	**a. the need for more than 350 new employees?**
	○	⊙	**b. an increase in heavy-duty transport truck traffic to and/or from the facility by more than 350 truck round-trips per day?**
	○	⊙	**c. increase customer traffic by more than 700 visits per day?**
			Part V – Noise
11.	○	⊙	**Will the project include equipment that will generate noise GREATER THAN 90 decibels (dB) at the property line?**
			Part VI – Public Services
12.			**Will the project create a permanent need for new or additional public services in any of the following areas** (Check all that apply):
	○	⊙	**a. Solid waste disposal?** Check "No" if the projected potential amount of wastes generated by the project is less than five tons per day.
	○	⊙	**b. Hazardous waste disposal?** Check "No" if the projected potential amount of hazardous wastes generated by the project is less than 42 cubic yards per day (or equivalent in pounds).

REMINDER: *For each "Yes" response in Section C, attach all pertinent information including but not limited to estimated quantities, volumes, weights, etc.*

Section D - Signatures

I HEREBY CERTIFY THAT ALL INFORMATION CONTAINED HEREIN AND INFORMATION SUBMITTED WITH THIS APPLICATION IS TRUE AND CORRECT TO THE BEST OF MY KNOWLEDGE. I UNDERSTAND THAT THIS FORM IS A SCREENING TOOL AND THAT THE SCAQMD RESERVES THE RIGHT TO CONSIDER OTHER PERTINENT INFORMATION IN DETERMINING CEQA APPLICABILITY.

1. Signature of Responsible Official of Firm:		2. Title of Responsible Official of Firm: Plant Manager
3. Print Name of Responsible Official of Firm: John Hogarth		4. Date Signed: 4/10/14
5. Phone # of Responsible Official of Firm: (323) 262-1101	6. Fax # of Responsible Official of Firm: (323) 269-1906	7. Email of Responsible Official of Firm: John.Hogarth@na.exide.com
8. Signature of Preparer, (If prepared by person other than responsible official of firm):		9. Title of Preparer: Manager, ENVIRON
10. Print Name of Preparer: Michael DiCostanzo		11. Date Signed: 4/10/2014
12. Phone # of Preparer: (213) 943-6353	13. Fax # of Preparer: (213) 943-6301	14. Email of Preparer: mdicostanzo@environcorp.com

THIS CONCLUDES FORM 400-CEQA. INCLUDE THIS FORM AND ANY ATTACHMENTS WITH FORM 400-A.

[4] Table 1 – Regulated Substances List and Threshold Quantities for Accidental Release Prevention can be found in the Instructions for Form 400-CEQA.

South Coast Air Quality Management District

Form 400-A

Application Form for Permit or Plan Approval

List only one piece of equipment or process per form.

Mail To:
SCAQMD
P.O. Box 4944
Diamond Bar, CA 91765-0944
Tel: (909) 396-3385
www.aqmd.gov

Section A - Operator Information

1. Facility Name (Business Name of Operator to Appear on the Permit): Exide Technologies

2. Valid AQMD Facility ID (Available On Permit Or Invoice Issued By AQMD): 124838

3. Owner's Business Name (If different from Business Name of Operator):

Section B - Equipment Location Address

4. Equipment Location Is: (•) Fixed Location ( ) Various Location
(For equipment operated at various locations, provide address of initial site.)

2700 S. Indiana Street
Street Address
Vernon, CA 90058
City Zip
Ed Mopas — Environmental Manager
Contact Name — Title
(323) 262-1101 259 — (323) 262-0642
Phone # Ext. Fax #
E-Mail: ed.mopas@exide.com

Section C - Permit Mailing Address

5. Permit and Correspondence Information:
[X] Check here if same as equipment location address

2700 S. Indiana Street
Address
Vernon, CA 90058
City State Zip
Ed Mopas — Environmental Manager
Contact Name — Title
(323) 262-1101 259 — (323) 262-0642
Phone # Ext. Fax #
E-Mail: ed.mopas@exide.com

Section D - Application Type

6. The Facility Is: ( ) Not In RECLAIM or Title V ( ) In RECLAIM ( ) In Title V (•) In RECLAIM & Title V Programs

7. Reason for Submitting Application (Select only ONE):

7a. New Equipment or Process Application:

- ( ) New Construction (Permit to Construct)
- ( ) Equipment On-Site But Not Constructed or Operational
- ( ) Equipment Operating Without A Permit *
- ( ) Compliance Plan
- ( ) Registration/Certification
- ( ) Streamlined Standard Permit

7b. Facility Permits:

- ( ) Title V Application or Amendment (Refer to Title V Matrix)
- ( ) RECLAIM Facility Permit Amendment

7c. Equipment or Process with an Existing/Previous Application or Permit:

- ( ) Administrative Change
- (•) Alteration/Modification
- ( ) Alteration/Modification without Prior Approval *
- ( ) Change of Condition
- ( ) Change of Condition without Prior Approval *
- ( ) Change of Location
- ( ) Change of Location without Prior Approval *
- ( ) Equipment Operating with an Expired/Inactive Permit *

Existing or Previous Permit/Application
If you checked any of the items in 7c., you MUST provide an existing Permit or Application Number: 558213
374150/61250

* A Higher Permit Processing Fee and additional Annual Operating Fees (up to 3 full years) may apply (Rule 301(c)(1)(D)(i)).

8a. Estimated Start Date of Construction (mm/dd/yyyy): 09/01/2014
8b. Estimated End Date of Construction (mm/dd/yyyy): 10/15/2014
8c. Estimated Start Date of Operation (mm/dd/yyyy): 10/15/2014

9. Description of Equipment or Reason for Compliance Plan (list applicable rule):
Modification of Blast Furnace afterburner to connect to blast furnace thimble, Blast Baghouse 2 and new venturi/tray scrubber

10. For Identical equipment, how many additional applications are being submitted with this application? (Form 400-A required for each equipment / process): 0

11. Are you a Small Business as per AQMD's Rule 102 definition? (10 employees or less and total gross receipts are $500,000 or less OR a not-for-profit training center) (•) No ( ) Yes

12. Has a Notice of Violation (NOV) or a Notice to Comply (NC) been issued for this equipment? ( ) No (•) Yes
If Yes, provide NOV/NC#: P49899

Section E - Facility Business Information

13. What type of business is being conducted at this equipment location? Secondary lead smelter

14. What is your business primary NAICS Code? (North American Industrial Classification System) 331492

15. Are there other facilities in the SCAQMD jurisdiction operated by the same operator? ( ) No (•) Yes

16. Are there any schools (K-12) within 1000 feet of the facility property line? (•) No ( ) Yes

Section F - Authorization/Signature

I hereby certify that all information contained herein and information submitted with this application are true and correct.

17. Signature of Responsible Official:

18. Title of Responsible Official: Plant Manager

19. I wish to review the permit prior to issuance. (This may cause a delay in the application process.) ( ) No ( ) Yes

20. Print Name: John Hogarth

21. Date:

22. Do you claim confidentiality of data? (If Yes, see instructions.) ( ) No ( ) Yes

23. Check List: [X] Authorized Signature/Date [X] Form 400-CEQA [X] Supplemental Form(s) (ie., Form 400-E-xx) [X] Fees Enclosed

AQMD USE ONLY	APPLICATION TRACKING #	CHECK #	AMOUNT RECEIVED	PAYMENT TRACKING #	VALIDATION
	562498	1057075	$5008.73	114910	4/10/14

DATE	APP REJ	DATE	APP REJ	CLASS I III	BASIC CONTROL	EQUIPMENT CATEGORY CODE	TEAM #	ENGINEER	REASON/ACTION TAKEN

© South Coast Air Quality Management District, Form 400-A (2012.07)

* Per Charlie Tupas, [illegible] to Team w/ [illegible]

1/18

South Coast Air Quality Management District

Form 400-A

Application Form for Permit or Plan Approval

List only one piece of equipment or process per form.

Mail To:
SCAQMD
P.O. Box 4944
Diamond Bar, CA 91765-0944
Tel: (909) 396-3385
www.aqmd.gov

Section A - Operator Information

1. Facility Name (Business Name of Operator to Appear on the Permit): Exide Technologies

2. Valid AQMD Facility ID (Available On Permit Or Invoice Issued By AQMD): 124838

3. Owner's Business Name (If different from Business Name of Operator):

Section B - Equipment Location Address

4. Equipment Location Is: (●) Fixed Location ( ) Various Location
(For equipment operated at various locations, provide address of initial site.)

2700 S. Indiana Street
Street Address
Vernon, CA 90058
City Zip
Ed Mopas — Environmental Manager
Contact Name — Title
(323) 262-1101 259 (323) 262-0642
Phone # Ext. Fax #
E-Mail: ed.mopas@exide.com

Section C - Permit Mailing Address

5. Permit and Correspondence Information:
[X] Check here if same as equipment location address

2700 S. Indiana Street
Address
Vernon, CA 90058
City State Zip
Ed Mopas — Environmental Manager
Contact Name — Title
(323) 262-1101 259 (323) 262-0642
Phone # Ext. Fax #
E-Mail: ed.mopas@exide.com

Section D - Application Type

6. The Facility Is: ( ) Not In RECLAIM or Title V ( ) In RECLAIM ( ) In Title V (●) In RECLAIM & Title V Programs

7. Reason for Submitting Application (Select only ONE):

7a. New Equipment or Process Application:

- ( ) New Construction (Permit to Construct)
- ( ) Equipment On-Site But Not Constructed or Operational
- ( ) Equipment Operating Without A Permit *
- ( ) Compliance Plan
- ( ) Registration/Certification
- ( ) Streamlined Standard Permit

7b. Facility Permits:

- ( ) Title V Application or Amendment (Refer to Title V Matrix)
- ( ) RECLAIM Facility Permit Amendment

7c. Equipment or Process with an Existing/Previous Application or Permit:

- ( ) Administrative Change
- (●) Alteration/Modification (50)
- ( ) Alteration/Modification without Prior Approval *
- ( ) Change of Condition
- ( ) Change of Condition without Prior Approval *
- ( ) Change of Location
- ( ) Change of Location without Prior Approval *
- ( ) Equipment Operating with an Expired/Inactive Permit *

Existing or Previous Permit/Application
If you checked any of the items in 7c., you MUST provide an existing Permit or Application Number: 533206

* A Higher Permit Processing Fee and additional Annual Operating Fees (up to 3 full years) may apply (Rule 301(c)(1)(D)(i)).

8a. Estimated Start Date of Construction (mm/dd/yyyy): 09/01/2014
8b. Estimated End Date of Construction (mm/dd/yyyy): 10/15/2014
8c. Estimated Start Date of Operation (mm/dd/yyyy): 10/15/2014

9. Description of Equipment or Reason for Compliance Plan (list applicable rule):
Pot Furnace #2 (D9) modification to redirect ventilation from baghouse C46 to C41 and C45 and to allow for arsenic addition

10. For Identical equipment, how many additional applications are being submitted with this application? (Form 400-A required for each equipment / process): 1

11. Are you a Small Business as per AQMD's Rule 102 definition? (10 employees or less and total gross receipts are $500,000 or less OR a not-for-profit training center) (●) No ( ) Yes

12. Has a Notice of Violation (NOV) or a Notice to Comply (NC) been issued for this equipment? (●) No ( ) Yes
If Yes, provide NOV/NC#:

Section E - Facility Business Information

13. What type of business is being conducted at this equipment location? Secondary lead smelter

14. What is your business primary NAICS Code? (North American Industrial Classification System) 331492

15. Are there other facilities in the SCAQMD jurisdiction operated by the same operator? ( ) No (●) Yes

16. Are there any schools (K-12) within 1000 feet of the facility property line? (●) No ( ) Yes

Section F - Authorization/Signature

I hereby certify that all information contained herein and information submitted with this application are true and correct.

17. Signature of Responsible Official: Hogarth

18. Title of Responsible Official: Plant Manager

19. I wish to review the permit prior to issuance. (This may cause a delay in the application process.) ( ) No ( ) Yes

20. Print Name: John Hogarth

21. Date: 4/10/14.

22. Do you claim confidentiality of data? (If Yes, see instructions.) ( ) No ( ) Yes

23. Check List: [X] Authorized Signature/Date [X] Form 400-CEQA [X] Supplemental Form(s) (ie., Form 400-E-xx) [X] Fees Enclosed

AQMD USE ONLY	APPLICATION TRACKING #	CHECK #	AMOUNT RECEIVED	PAYMENT TRACKING #	VALIDATION
	562502	60570 75	$ 50056.73	CT 114910	4/10/14

DATE	APP REJ	DATE	APP REJ	CLASS I III	BASIC CONTROL	EQUIPMENT CATEGORY CODE	TEAM	ENGINEER	REASON/ACTION TAKEN
							A		

© South Coast Air Quality Management District, Form 400-A (2012.07)

5/18

South Coast Air Quality Management District

Form 400-E-9f
External Combustion
Metal Melting & Heat Treating Furnaces

This form must be accompanied by a completed Application for a Permit to Construct/Operate - Forms 400-A, Form 400-CEQA, and Form 400-PS.

Mail To:
SCAQMD
P.O. Box 4944
Diamond Bar, CA 91765-0944

Tel: (909) 396-3385
www.aqmd.gov

Section A - Operator Information

Facility Name (Business Name of Operator That Appears On Permit): Exide Technologies

Valid AQMD Facility ID (Available On Permit Or Invoice Issued By AQMD): 124838

Address where the equipment will be operated (for equipment which will be moved to various location in AQMD's jurisdiction, please list the initial location site): 2700 S. Indiana Street, Vernon, CA 90058

(•) Fixed Location ( ) Various Locations

Section B - Equipment Description

Device Type	( ) Crucible ( ) Cupola (•) Furnace ( ) Other_____
Furnace Type	( ) Electric Arc ( ) Induction (•) Pot ( ) Reverberatory ( ) Sweat
Furnace Operation	( ) Annealing ( ) Forging ( ) Heat Treating ( ) Holding ( ) Melting ( ) Reducing (•) Other Refining
Equipment Type	Manufacturer: Model No.: Serial No:
Dimension	Length:_____ft. Width:_____ft. Height:_____ft.
Capacity	Total melting capacity:_____pounds/hour
Type of Material Processed	( ) Aluminum (•) Lead ( ) Steel ( ) Titanium ( ) Zinc ( ) Bronze ( ) Other_____
Burner Information	Burner Manufacturer:_____ Burner Model No.:_____ Number Of Burners:_____ BTU Rating Of Each Burner: 3 BTU/hr Low NOx Type? ( ) No ( ) Yes If Yes, please attach manufacturer's specifications Combustion Air Blower: Quantity:_____ HP:_____ CFM:_____
Fuel Type	( ) LPG (•) Natural Gas Fired ( ) Oxygen/Natural Gas ( ) Electric Heating: Total KW Rating:_____
Operational Features	( ) Demagging _____pounds/hour Using_____ ( ) Degassing _____pounds/hour Using_____ ( ) Chlorination _____pounds/hour

Section C - Process Description

Brief Description of Process	Please provide a brief description of the process and attach manufacturer's technical specifications and guarantees. Describe the method of charging the furnace, include data concerning the number and relative sizes of charge per heat and time elapsed between charges. Device IDs D7 and D9 to be modified by redirecting ventilation from Hard Lead baghouse (C46) to Device IDs C45 (Blast Furnace Baghouse) and C41 (Blast Baghouse 2, formerly Reverb Baghouse), and change of condition to allow for arsenic addition.

© South Coast Air Quality Management District, Form 400-E-9f (2009.04)

South Coast Air Quality Management District

Form 400-E-9f
External Combustion
Metal Melting & Heat Treating Furnaces

This form must be accompanied by a completed Application for a Permit to Construct/Operate - Forms 400-A, Form 400-CEQA, and Form 400-PS.

Section C - Process Description (cont.)

Operation

○ Batch ○ Continuous Operating Temperature_____ °F

Production Data

List all materials processed in this furnace:

Materials (e.g. Aluminum, glass, etc.)	Weight or Volume (%)	process Rate (pounds/hour)
lead		

Controls

Furnace is vented to: ○ Afterburner ◉ Baghouse ○ Selective Catalytic Reduction (SCR) ○ Knock-out Chamber

Instrumentation Data

Describe instrumentation data for measuring temperature and other operating parameters.

Operating Schedule

Normal: 24 hours/day 7 days/week 52 weeks/yr

Maximum: 24 hours/day 7 days/week 52 weeks/yr

Section D - Authorization/Signature

I hereby certify that all information contained herein and information submitted with this application is true and correct.

Preparer Info

Signature: Michael DiCostanzo Date: 4/10/2014

Title: Manager Company Name: ENVIRON Int'l Corp.

Name: Michael DiCostanzo

Phone #: (213) 943-6353 Fax #: (213) 943-6301

Email: mdicostanzo@environcorp.com

Contact Info

Name: Ed Mopas

Title: Env. Manager Company Name: Exide Technologies

Phone #: (323) 262-1101 Fax #: (323) 262-0642

Email: ed.mopas@exide.com

THIS IS A PUBLIC DOCUMENT

Pursuant to the California Public Records Act, your permit application and any supplemental documentation are public records and may be disclosed to a third party. If you wish to claim certain limited information as exempt from disclosure because it qualifies as a trade secret, as defined in the District's Guidelines for Implementing the California Public Records Act, you must make such claim at the time of submittal to the District.

Check here if you claim that this form or its attachments contain confidential trade secret information. ☐

© South Coast Air Quality Management District, Form 400-E-9f (2009.04)

South Coast Air Quality Management District

Form 400-A

Application Form for Permit or Plan Approval

List only one piece of equipment or process per form.

Mail To:
SCAQMD
P.O. Box 4944
Diamond Bar, CA 91765-0944
Tel: (909) 396-3385
www.aqmd.gov

Section A - Operator Information

1. Facility Name (Business Name of Operator to Appear on the Permit): Exide Technologies

2. Valid AQMD Facility ID (Available On Permit Or Invoice Issued By AQMD): 124838

3. Owner's Business Name (If different from Business Name of Operator):

Section B - Equipment Location Address

4. Equipment Location Is: (●) Fixed Location ( ) Various Location
(For equipment operated at various locations, provide address of initial site.)

2700 S. Indiana Street
Street Address
Vernon, CA 90058
City Zip
Ed Mopas — Contact Name
Environmental Manager — Title
(323) 262-1101 Phone # 259 Ext. (323) 262-0642 Fax #
E-Mail: ed.mopas@exide.com

Section C - Permit Mailing Address

5. Permit and Correspondence Information:
[X] Check here if same as equipment location address

2700 S. Indiana Street
Address
Vernon, CA 90058
City State Zip
Ed Mopas — Contact Name
Environmental Manager — Title
(323) 262-1101 Phone # 259 Ext. (323) 262-0642 Fax #
E-Mail: ed.mopas@exide.com

Section D - Application Type

6. The Facility Is: ( ) Not In RECLAIM or Title V ( ) In RECLAIM ( ) In Title V (●) In RECLAIM & Title V Programs

7. Reason for Submitting Application (Select only ONE):

7a. New Equipment or Process Application:

- ( ) New Construction (Permit to Construct)
- ( ) Equipment On-Site But Not Constructed or Operational
- ( ) Equipment Operating Without A Permit *
- ( ) Compliance Plan
- ( ) Registration/Certification
- ( ) Streamlined Standard Permit

7b. Facility Permits:

- ( ) Title V Application or Amendment (Refer to Title V Matrix)
- ( ) RECLAIM Facility Permit Amendment

7c. Equipment or Process with an Existing/Previous Application or Permit:

- ( ) Administrative Change
- (●) Alteration/Modification (F50)
- ( ) Alteration/Modification without Prior Approval *
- ( ) Change of Condition
- ( ) Change of Condition without Prior Approval *
- ( ) Change of Location
- ( ) Change of Location without Prior Approval *
- ( ) Equipment Operating with an Expired/Inactive Permit *

Existing or Previous Permit/Application
If you checked any of the items in 7c., you MUST provide an existing Permit or Application Number: 374231

* A Higher Permit Processing Fee and additional Annual Operating Fees (up to 3 full years) may apply (Rule 301(c)(1)(D)(i)).

8a. Estimated Start Date of Construction (mm/dd/yyyy): 09/01/2014
8b. Estimated End Date of Construction (mm/dd/yyyy): 10/15/2014
8c. Estimated Start Date of Operation (mm/dd/yyyy): 10/15/2014

9. Description of Equipment or Reason for Compliance Plan (list applicable rule):
Blast Baghouse 2 (C41) will be repurposed and removed from the Reverb Furnace control train

10. For Identical equipment, how many additional applications are being submitted with this application? (Form 400-A required for each equipment / process): 0

11. Are you a Small Business as per AQMD's Rule 102 definition? (10 employees or less and total gross receipts are $500,000 or less OR a not-for-profit training center) (●) No ( ) Yes

12. Has a Notice of Violation (NOV) or a Notice to Comply (NC) been issued for this equipment? (●) No ( ) Yes
If Yes, provide NOV/NC#:

Section E - Facility Business Information

13. What type of business is being conducted at this equipment location?
Secondary lead smelter

14. What is your business primary NAICS Code? (North American Industrial Classification System): 331492

15. Are there other facilities in the SCAQMD jurisdiction operated by the same operator? ( ) No (●) Yes

16. Are there any schools (K-12) within 1000 feet of the facility property line? (●) No ( ) Yes

Section F - Authorization/Signature

I hereby certify that all information contained herein and information submitted with this application are true and correct.

17. Signature of Responsible Official: H Hogarth

18. Title of Responsible Official: Plant Manager

19. I wish to review the permit prior to issuance. (This may cause a delay in the application process.) ( ) No ( ) Yes

20. Print Name: John Hogarth

21. Date: 4/10/14.

22. Do you claim confidentiality of data? (If Yes, see instructions.) ( ) No ( ) Yes

23. Check List: [X] Authorized Signature/Date [X] Form 400-CEQA [X] Supplemental Form(s) (ie., Form 400-E-xx) [X] Fees Enclosed

AQMD USE ONLY	APPLICATION TRACKING #	CHECK #	AMOUNT RECEIVED	PAYMENT TRACKING #	VALIDATION
	4/4/14 5025036057075		$ 50056.73	CT14910	4/10/14

DATE	APP REJ	DATE	APP REJ	CLASS I III	BASIC CONTROL	EQUIPMENT CATEGORY CODE	TEAM	ENGINEER	REASON/ACTION TAKEN
							A		

© South Coast Air Quality Management District, Form 400-A (2012.07)

6/18

South Coast Air Quality Management District

Form 400-A

Application Form for Permit or Plan Approval

List only one piece of equipment or process per form.

Mail To:
SCAQMD
P.O. Box 4944
Diamond Bar, CA 91765-0944
Tel: (909) 396-3385
www.aqmd.gov

Section A - Operator Information

1. Facility Name (Business Name of Operator to Appear on the Permit): Exide Technologies

2. Valid AQMD Facility ID (Available On Permit Or Invoice Issued By AQMD): 124838

3. Owner's Business Name (If different from Business Name of Operator):

Section B - Equipment Location Address

4. Equipment Location Is: (●) Fixed Location ( ) Various Location
(For equipment operated at various locations, provide address of initial site.)

2700 S. Indiana Street
Street Address
Vernon, CA 90058
City Zip
Ed Mopas — Contact Name
Environmental Manager — Title
(323) 262-1101 Phone # 259 Ext. (323) 262-0642 Fax #
E-Mail: ed.mopas@exide.com

Section C - Permit Mailing Address

5. Permit and Correspondence Information:
[X] Check here if same as equipment location address

2700 S. Indiana Street
Address
Vernon, CA 90058
City State Zip
Ed Mopas — Contact Name
Environmental Manager — Title
(323) 262-1101 Phone # 259 Ext. (323) 262-0642 Fax #
E-Mail: ed.mopas@exide.com

Section D - Application Type

6. The Facility Is: ( ) Not In RECLAIM or Title V ( ) In RECLAIM ( ) In Title V (●) In RECLAIM & Title V Programs

7. Reason for Submitting Application (Select only ONE):

7a. New Equipment or Process Application:

- ( ) New Construction (Permit to Construct)
- ( ) Equipment On-Site But Not Constructed or Operational
- ( ) Equipment Operating Without A Permit *
- ( ) Compliance Plan
- ( ) Registration/Certification
- ( ) Streamlined Standard Permit

7b. Facility Permits:

- ( ) Title V Application or Amendment (Refer to Title V Matrix)
- ( ) RECLAIM Facility Permit Amendment

7c. Equipment or Process with an Existing/Previous Application or Permit:

- ( ) Administrative Change
- ( ) Alteration/Modification
- ( ) Alteration/Modification without Prior Approval *
- (●) Change of Condition (60)
- ( ) Change of Condition without Prior Approval *
- ( ) Change of Location
- ( ) Change of Location without Prior Approval *
- ( ) Equipment Operating with an Expired/Inactive Permit *

Existing or Previous Permit/Application
If you checked any of the items in 7c., you MUST provide an existing Permit or Application Number: 533207

* A Higher Permit Processing Fee and additional Annual Operating Fees (up to 3 full years) may apply (Rule 301(c)(1)(D)(i)).

8a. Estimated Start Date of Construction (mm/dd/yyyy): 09/01/2014
8b. Estimated End Date of Construction (mm/dd/yyyy): 10/15/2014
8c. Estimated Start Date of Operation (mm/dd/yyyy): 10/15/2014

9. Description of Equipment or Reason for Compliance Plan (list applicable rule):
Pot Furnace #3 (D11) change of condition to restrict arsenic addition

10. For Identical equipment, how many additional applications are being submitted with this application? (Form 400-A required for each equipment / process): 11

11. Are you a Small Business as per AQMD's Rule 102 definition? (10 employees or less and total gross receipts are $500,000 or less OR a not-for-profit training center) (●) No ( ) Yes

12. Has a Notice of Violation (NOV) or a Notice to Comply (NC) been issued for this equipment? (●) No ( ) Yes
If Yes, provide NOV/NC#:

Section E - Facility Business Information

13. What type of business is being conducted at this equipment location? Secondary lead smelter

14. What is your business primary NAICS Code? (North American Industrial Classification System) 331492

15. Are there other facilities in the SCAQMD jurisdiction operated by the same operator? ( ) No (●) Yes

16. Are there any schools (K-12) within 1000 feet of the facility property line? (●) No ( ) Yes

Section F - Authorization/Signature

I hereby certify that all information contained herein and information submitted with this application are true and correct.

17. Signature of Responsible Official: H Hogarth

18. Title of Responsible Official: Plant Manager

19. I wish to review the permit prior to issuance. (This may cause a delay in the application process.) ( ) No ( ) Yes

20. Print Name: John Hogarth

21. Date: 4/10/14

22. Do you claim confidentiality of data? (If Yes, see instructions.) ( ) No ( ) Yes

23. Check List: [X] Authorized Signature/Date [X] Form 400-CEQA [X] Supplemental Form(s) (ie., Form 400-E-xx) [X] Fees Enclosed

AQMD USE ONLY	APPLICATION TRACKING #	CHECK #	AMOUNT RECEIVED	PAYMENT TRACKING #	VALIDATION
	562504	6057075	$ 50056.73	CT114910	4/10/14

DATE	APP REJ	DATE	APP REJ	CLASS I III	BASIC CONTROL	EQUIPMENT CATEGORY CODE	TEAM	ENGINEER	REASON/ACTION TAKEN
							A		

© South Coast Air Quality Management District, Form 400-A (2012.07)

8/18

South Coast Air Quality Management District

Form 400-A

Application Form for Permit or Plan Approval

List only one piece of equipment or process per form.

Mail To:
SCAQMD
P.O. Box 4944
Diamond Bar, CA 91765-0944
Tel: (909) 396-3385
www.aqmd.gov

Section A - Operator Information

1. Facility Name (Business Name of Operator to Appear on the Permit): Exide Technologies

2. Valid AQMD Facility ID (Available On Permit Or Invoice Issued By AQMD): 124838

3. Owner's Business Name (If different from Business Name of Operator):

Section B - Equipment Location Address

4. Equipment Location Is: (●) Fixed Location ( ) Various Location
(For equipment operated at various locations, provide address of initial site.)

Street Address: 2700 S. Indiana Street
City: Vernon, CA Zip: 90058
Contact Name: Ed Mopas Title: Environmental Manager
Phone #: (323) 262-1101 Ext. 259 Fax #: (323) 262-0642
E-Mail: ed.mopas@exide.com

Section C - Permit Mailing Address

5. Permit and Correspondence Information:
[X] Check here if same as equipment location address

Address: 2700 S. Indiana Street
City: Vernon, State: CA Zip: 90058
Contact Name: Ed Mopas Title: Environmental Manager
Phone #: (323) 262-1101 Ext. 259 Fax #: (323) 262-0642
E-Mail: ed.mopas@exide.com

Section D - Application Type

6. The Facility Is: ( ) Not In RECLAIM or Title V ( ) In RECLAIM ( ) In Title V (●) In RECLAIM & Title V Programs

7. Reason for Submitting Application (Select only ONE):

7a. New Equipment or Process Application:
- ( ) New Construction (Permit to Construct)
- ( ) Equipment On-Site But Not Constructed or Operational
- ( ) Equipment Operating Without A Permit *
- ( ) Compliance Plan
- ( ) Registration/Certification
- ( ) Streamlined Standard Permit

7b. Facility Permits:
- ( ) Title V Application or Amendment (Refer to Title V Matrix)
- ( ) RECLAIM Facility Permit Amendment

7c. Equipment or Process with an Existing/Previous Application or Permit:
- ( ) Administrative Change
- ( ) Alteration/Modification
- ( ) Alteration/Modification without Prior Approval *
- (●) Change of Condition (10)
- ( ) Change of Condition without Prior Approval *
- ( ) Change of Location
- ( ) Change of Location without Prior Approval *
- ( ) Equipment Operating with an Expired/Inactive Permit *

Existing or Previous Permit/Application
If you checked any of the items in 7c., you MUST provide an existing Permit or Application Number: 533209

* A Higher Permit Processing Fee and additional Annual Operating Fees (up to 3 full years) may apply (Rule 301(c)(1)(D)(i)).

8a. Estimated Start Date of Construction (mm/dd/yyyy): 09/01/2014
8b. Estimated End Date of Construction (mm/dd/yyyy): 10/15/2014
8c. Estimated Start Date of Operation (mm/dd/yyyy): 10/15/2014

9. Description of Equipment or Reason for Compliance Plan (list applicable rule):
Pot Furnace #5 (D15) change of condition to restrict arsenic addition

10. For Identical equipment, how many additional applications are being submitted with this application? (Form 400-A required for each equipment / process): 11

11. Are you a Small Business as per AQMD's Rule 102 definition? (10 employees or less and total gross receipts are $500,000 or less OR a not-for-profit training center) (●) No ( ) Yes

12. Has a Notice of Violation (NOV) or a Notice to Comply (NC) been issued for this equipment? (●) No ( ) Yes
If Yes, provide NOV/NC#:

Section E - Facility Business Information

13. What type of business is being conducted at this equipment location? Secondary lead smelter

14. What is your business primary NAICS Code? (North American Industrial Classification System): 331492

15. Are there other facilities in the SCAQMD jurisdiction operated by the same operator? ( ) No (●) Yes

16. Are there any schools (K-12) within 1000 feet of the facility property line? (●) No ( ) Yes

Section F - Authorization/Signature

I hereby certify that all information contained herein and information submitted with this application are true and correct.

17. Signature of Responsible Official: H Hogarth

18. Title of Responsible Official: Plant Manager

19. I wish to review the permit prior to issuance. (This may cause a delay in the application process.) ( ) No ( ) Yes

20. Print Name: John Hogarth

21. Date: 4/10/14.

22. Do you claim confidentiality of data? (If Yes, see instructions.) ( ) No ( ) Yes

23. Check List: [X] Authorized Signature/Date [X] Form 400-CEQA [X] Supplemental Form(s) (ie., Form 400-E-xx) [X] Fees Enclosed

AQMD USE ONLY	APPLICATION TRACKING #	CHECK #	AMOUNT RECEIVED	PAYMENT TRACKING #	VALIDATION
	4/11/14 562505	6057075	$ 50056.73	CT 14910	4/10/14

DATE	APP REJ	DATE	APP REJ	CLASS I III	BASIC CONTROL	EQUIPMENT CATEGORY CODE	TEAM	ENGINEER	REASON/ACTION TAKEN
							A		

© South Coast Air Quality Management District, Form 400-A (2012.07)

9/18

South Coast Air Quality Management District

Form 400-A

Application Form for Permit or Plan Approval

List only one piece of equipment or process per form.

Mail To:
SCAQMD
P.O. Box 4944
Diamond Bar, CA 91765-0944

Tel: (909) 396-3385
www.aqmd.gov

Section A - Operator Information

1. Facility Name (Business Name of Operator to Appear on the Permit): Exide Technologies

2. Valid AQMD Facility ID (Available On Permit Or Invoice Issued By AQMD): 124838

3. Owner's Business Name (If different from Business Name of Operator):

Section B - Equipment Location Address

4. Equipment Location Is: (●) Fixed Location ( ) Various Location
(For equipment operated at various locations, provide address of initial site.)

Street Address: 2700 S. Indiana Street
City: Vernon, CA Zip: 90058
Contact Name: Ed Mopas Title: Environmental Manager
Phone #: (323) 262-1101 Ext. 259 Fax #: (323) 262-0642
E-Mail: ed.mopas@exide.com

Section C - Permit Mailing Address

5. Permit and Correspondence Information:
[X] Check here if same as equipment location address

Address: 2700 S. Indiana Street
City: Vernon, State: CA Zip: 90058
Contact Name: Ed Mopas Title: Environmental Manager
Phone #: (323) 262-1101 Ext. 259 Fax #: (323) 262-0642
E-Mail: ed.mopas@exide.com

Section D - Application Type

6. The Facility Is: ( ) Not In RECLAIM or Title V ( ) In RECLAIM ( ) In Title V (●) In RECLAIM & Title V Programs

7. Reason for Submitting Application (Select only ONE):

7a. New Equipment or Process Application:

- ( ) New Construction (Permit to Construct)
- ( ) Equipment On-Site But Not Constructed or Operational
- ( ) Equipment Operating Without A Permit *
- ( ) Compliance Plan
- ( ) Registration/Certification
- ( ) Streamlined Standard Permit

7b. Facility Permits:

- ( ) Title V Application or Amendment (Refer to Title V Matrix)
- ( ) RECLAIM Facility Permit Amendment

7c. Equipment or Process with an Existing/Previous Application or Permit:

- ( ) Administrative Change
- ( ) Alteration/Modification
- ( ) Alteration/Modification without Prior Approval *
- (●) Change of Condition (COC)
- ( ) Change of Condition without Prior Approval *
- ( ) Change of Location
- ( ) Change of Location without Prior Approval *
- ( ) Equipment Operating with an Expired/Inactive Permit *

Existing or Previous Permit/Application
If you checked any of the items in 7c., you MUST provide an existing Permit or Application Number: 496426

* A Higher Permit Processing Fee and additional Annual Operating Fees (up to 3 full years) may apply (Rule 301(c)(1)(D)(i)).

8a. Estimated Start Date of Construction (mm/dd/yyyy): 09/01/2014
8b. Estimated End Date of Construction (mm/dd/yyyy): 10/15/2014
8c. Estimated Start Date of Operation (mm/dd/yyyy): 10/15/2014

9. Description of Equipment or Reason for Compliance Plan (list applicable rule):
Pot Furnace #6 (D24) change of condition to restrict arsenic addition

10. For Identical equipment, how many additional applications are being submitted with this application? (Form 400-A required for each equipment / process): 11

11. Are you a Small Business as per AQMD's Rule 102 definition? (10 employees or less and total gross receipts are $500,000 or less OR a not-for-profit training center) (●) No ( ) Yes

12. Has a Notice of Violation (NOV) or a Notice to Comply (NC) been issued for this equipment? (●) No ( ) Yes
If Yes, provide NOV/NC#:

Section E - Facility Business Information

13. What type of business is being conducted at this equipment location? Secondary lead smelter

14. What is your business primary NAICS Code? (North American Industrial Classification System) 331492

15. Are there other facilities in the SCAQMD jurisdiction operated by the same operator? ( ) No (●) Yes

16. Are there any schools (K-12) within 1000 feet of the facility property line? (●) No ( ) Yes

Section F - Authorization/Signature

I hereby certify that all information contained herein and information submitted with this application are true and correct.

17. Signature of Responsible Official: J. Hogarth

18. Title of Responsible Official: Plant Manager

19. I wish to review the permit prior to issuance. (This may cause a delay in the application process.) ( ) No ( ) Yes

20. Print Name: John Hogarth

21. Date: 4/10/14.

22. Do you claim confidentiality of data? (If Yes, see instructions.) ( ) No ( ) Yes

23. Check List: [X] Authorized Signature/Date [X] Form 400-CEQA [X] Supplemental Form(s) (ie., Form 400-E-xx) [X] Fees Enclosed

AQMD USE ONLY	APPLICATION TRACKING #	CHECK #	AMOUNT RECEIVED	PAYMENT TRACKING #	VALIDATION
	5602506	6057075	$ 50056.73	CI 14910	4/10/14

DATE	APP REJ	DATE	APP REJ	CLASS I III	BASIC CONTROL	EQUIPMENT CATEGORY CODE	TEAM	ENGINEER	REASON/ACTION TAKEN
							A		

© South Coast Air Quality Management District, Form 400-A (2012.07)

10/18

South Coast Air Quality Management District

Form 400-A

Application Form for Permit or Plan Approval

List only one piece of equipment or process per form.

Mail To:
SCAQMD
P.O. Box 4944
Diamond Bar, CA 91765-0944

Tel: (909) 396-3385
www.aqmd.gov

Section A - Operator Information

1. Facility Name (Business Name of Operator to Appear on the Permit): Exide Technologies

2. Valid AQMD Facility ID (Available On Permit Or Invoice Issued By AQMD): 124838

3. Owner's Business Name (If different from Business Name of Operator):

Section B - Equipment Location Address

4. Equipment Location Is: (●) Fixed Location ( ) Various Location
(For equipment operated at various locations, provide address of initial site.)

Street Address: 2700 S. Indiana Street
City: Vernon, CA Zip: 90058
Contact Name: Ed Mopas Title: Environmental Manager
Phone #: (323) 262-1101 Ext. 259 Fax #: (323) 262-0642
E-Mail: ed.mopas@exide.com

Section C - Permit Mailing Address

5. Permit and Correspondence Information:
[X] Check here if same as equipment location address

Address: 2700 S. Indiana Street
City: Vernon, State: CA Zip: 90058
Contact Name: Ed Mopas Title: Environmental Manager
Phone #: (323) 262-1101 Ext. 259 Fax #: (323) 262-0642
E-Mail: ed.mopas@exide.com

Section D - Application Type

6. The Facility Is: ( ) Not In RECLAIM or Title V ( ) In RECLAIM ( ) In Title V (●) In RECLAIM & Title V Programs

7. Reason for Submitting Application (Select only ONE):

7a. New Equipment or Process Application:
- ( ) New Construction (Permit to Construct)
- ( ) Equipment On-Site But Not Constructed or Operational
- ( ) Equipment Operating Without A Permit *
- ( ) Compliance Plan
- ( ) Registration/Certification
- ( ) Streamlined Standard Permit

7b. Facility Permits:
- ( ) Title V Application or Amendment (Refer to Title V Matrix)
- ( ) RECLAIM Facility Permit Amendment

7c. Equipment or Process with an Existing/Previous Application or Permit:
- ( ) Administrative Change
- ( ) Alteration/Modification
- ( ) Alteration/Modification without Prior Approval *
- (●) Change of Condition (10)
- ( ) Change of Condition without Prior Approval *
- ( ) Change of Location
- ( ) Change of Location without Prior Approval *
- ( ) Equipment Operating with an Expired/Inactive Permit *

Existing or Previous Permit/Application
If you checked any of the items in 7c., you MUST provide an existing Permit or Application Number: 496428

* A Higher Permit Processing Fee and additional Annual Operating Fees (up to 3 full years) may apply (Rule 301(c)(1)(D)(i)).

8a. Estimated Start Date of Construction (mm/dd/yyyy): 09/01/2014
8b. Estimated End Date of Construction (mm/dd/yyyy): 10/15/2014
8c. Estimated Start Date of Operation (mm/dd/yyyy): 10/15/2014

9. Description of Equipment or Reason for Compliance Plan (list applicable rule):
Pot Furnace #7 (D26) change of condition to restrict arsenic addition

10. For Identical equipment, how many additional applications are being submitted with this application? (Form 400-A required for each equipment / process): 11

11. Are you a Small Business as per AQMD's Rule 102 definition? (10 employees or less and total gross receipts are $500,000 or less OR a not-for-profit training center) (●) No ( ) Yes

12. Has a Notice of Violation (NOV) or a Notice to Comply (NC) been issued for this equipment? (●) No ( ) Yes
If Yes, provide NOV/NC#:

Section E - Facility Business Information

13. What type of business is being conducted at this equipment location? Secondary lead smelter

14. What is your business primary NAICS Code? (North American Industrial Classification System) 331492

15. Are there other facilities in the SCAQMD jurisdiction operated by the same operator? ( ) No (●) Yes

16. Are there any schools (K-12) within 1000 feet of the facility property line? (●) No ( ) Yes

Section F - Authorization/Signature

I hereby certify that all information contained herein and information submitted with this application are true and correct.

17. Signature of Responsible Official: Hogarth

18. Title of Responsible Official: Plant Manager

19. I wish to review the permit prior to issuance. (This may cause a delay in the application process.) ( ) No ( ) Yes

20. Print Name: John Hogarth

21. Date: 4/10/14.

22. Do you claim confidentiality of data? (If Yes, see instructions.) ( ) No ( ) Yes

23. Check List: [X] Authorized Signature/Date [X] Form 400-CEQA [X] Supplemental Form(s) (ie., Form 400-E-xx) [X] Fees Enclosed

AQMD USE ONLY	APPLICATION TRACKING #	CHECK #	AMOUNT RECEIVED	PAYMENT TRACKING #	VALIDATION
	562507	057075	$ 50056.73	CT 114910	4/10/14 mc

DATE	APP REJ	DATE	APP REJ	CLASS I III	BASIC CONTROL	EQUIPMENT CATEGORY CODE	TEAM	ENGINEER	REASON/ACTION TAKEN
							A		

© South Coast Air Quality Management District, Form 400-A (2012.07)

1/18

South Coast Air Quality Management District

Form 400-A

Application Form for Permit or Plan Approval

List only one piece of equipment or process per form.

Mail To:
SCAQMD
P.O. Box 4944
Diamond Bar, CA 91765-0944

Tel: (909) 396-3385
www.aqmd.gov

Section A - Operator Information

1. Facility Name (Business Name of Operator to Appear on the Permit): Exide Technologies

2. Valid AQMD Facility ID (Available On Permit Or Invoice Issued By AQMD): 124838

3. Owner's Business Name (If different from Business Name of Operator):

Section B - Equipment Location Address

4. Equipment Location Is: (●) Fixed Location ( ) Various Location
(For equipment operated at various locations, provide address of initial site.)

Street Address: 2700 S. Indiana Street
City: Vernon, CA Zip: 90058
Contact Name: Ed Mopas Title: Environmental Manager
Phone #: (323) 262-1101 Ext. 259 Fax #: (323) 262-0642
E-Mail: ed.mopas@exide.com

Section C - Permit Mailing Address

5. Permit and Correspondence Information:
[X] Check here if same as equipment location address

Address: 2700 S. Indiana Street
City: Vernon State: CA Zip: 90058
Contact Name: Ed Mopas Title: Environmental Manager
Phone #: (323) 262-1101 Ext. 259 Fax #: (323) 262-0642
E-Mail: ed.mopas@exide.com

Section D - Application Type

6. The Facility Is: ( ) Not In RECLAIM or Title V ( ) In RECLAIM ( ) In Title V (●) In RECLAIM & Title V Programs

7. Reason for Submitting Application (Select only ONE):

7a. New Equipment or Process Application:

- ( ) New Construction (Permit to Construct)
- ( ) Equipment On-Site But Not Constructed or Operational
- ( ) Equipment Operating Without A Permit *
- ( ) Compliance Plan
- ( ) Registration/Certification
- ( ) Streamlined Standard Permit

7b. Facility Permits:

- ( ) Title V Application or Amendment (Refer to Title V Matrix)
- ( ) RECLAIM Facility Permit Amendment

7c. Equipment or Process with an Existing/Previous Application or Permit:

- ( ) Administrative Change
- ( ) Alteration/Modification
- ( ) Alteration/Modification without Prior Approval *
- (●) Change of Condition (60)
- ( ) Change of Condition without Prior Approval *
- ( ) Change of Location
- ( ) Change of Location without Prior Approval *
- ( ) Equipment Operating with an Expired/Inactive Permit *

Existing or Previous Permit/Application
If you checked any of the items in 7c., you MUST provide an existing Permit or Application Number: 496429

* A Higher Permit Processing Fee and additional Annual Operating Fees (up to 3 full years) may apply (Rule 301(c)(1)(D)(i)).

8a. Estimated Start Date of Construction (mm/dd/yyyy): 09/01/2014
8b. Estimated End Date of Construction (mm/dd/yyyy): 10/15/2014
8c. Estimated Start Date of Operation (mm/dd/yyyy): 10/15/2014

9. Description of Equipment or Reason for Compliance Plan (list applicable rule):
Pot Furnace #8 (D28) change of condition to restrict arsenic addition

10. For identical equipment, how many additional applications are being submitted with this application? (Form 400-A required for each equipment / process): 11

11. Are you a Small Business as per AQMD's Rule 102 definition? (10 employees or less and total gross receipts are $500,000 or less OR a not-for-profit training center) (●) No ( ) Yes

12. Has a Notice of Violation (NOV) or a Notice to Comply (NC) been issued for this equipment? (●) No ( ) Yes
If Yes, provide NOV/NC#:

Section E - Facility Business Information

13. What type of business is being conducted at this equipment location?
Secondary lead smelter

14. What is your business primary NAICS Code? (North American Industrial Classification System): 331492

15. Are there other facilities in the SCAQMD jurisdiction operated by the same operator? ( ) No (●) Yes

16. Are there any schools (K-12) within 1000 feet of the facility property line? (●) No ( ) Yes

Section F - Authorization/Signature

I hereby certify that all information contained herein and information submitted with this application are true and correct.

17. Signature of Responsible Official: jhogarth

18. Title of Responsible Official: Plant Manager

19. I wish to review the permit prior to issuance. (This may cause a delay in the application process.) ( ) No ( ) Yes

20. Print Name: John Hogarth

21. Date: 4/10/14.

22. Do you claim confidentiality of data? (If Yes, see instructions.) ( ) No ( ) Yes

23. Check List: [X] Authorized Signature/Date [X] Form 400-CEQA [X] Supplemental Form(s) (ie., Form 400-E-xx) [X] Fees Enclosed

AQMD USE ONLY	APPLICATION TRACKING#	CHECK #	AMOUNT RECEIVED	PAYMENT TRACKING #	VALIDATION
	562508	6057075	$ 50056.73	GT 114910	4/10/14 MR

DATE	APP REJ	DATE	APP REJ	CLASS I III	BASIC CONTROL	EQUIPMENT CATEGORY CODE	TEAM	ENGINEER	REASON/ACTION TAKEN
							A		

© South Coast Air Quality Management District, Form 400-A (2012.07)

12/15

South Coast Air Quality Management District

Form 400-A

Application Form for Permit or Plan Approval

List only one piece of equipment or process per form.

Mail To:
SCAQMD
P.O. Box 4944
Diamond Bar, CA 91765-0944

Tel: (909) 396-3385
www.aqmd.gov

Section A - Operator Information

1. Facility Name (Business Name of Operator to Appear on the Permit): Exide Technologies

2. Valid AQMD Facility ID (Available On Permit Or Invoice Issued By AQMD): 124838

3. Owner's Business Name (If different from Business Name of Operator):

Section B - Equipment Location Address

4. Equipment Location Is: (●) Fixed Location ( ) Various Location
(For equipment operated at various locations, provide address of initial site.)

Street Address: 2700 S. Indiana Street
City: Vernon, CA Zip: 90058
Contact Name: Ed Mopas Title: Environmental Manager
Phone #: (323) 262-1101 Ext. 259 Fax #: (323) 262-0642
E-Mail: ed.mopas@exide.com

Section C - Permit Mailing Address

5. Permit and Correspondence Information:
[X] Check here if same as equipment location address

Address: 2700 S. Indiana Street
City: Vernon, State: CA Zip: 90058
Contact Name: Ed Mopas Title: Environmental Manager
Phone #: (323) 262-1101 Ext. 259 Fax #: (323) 262-0642
E-Mail: ed.mopas@exide.com

Section D - Application Type

6. The Facility Is: ( ) Not In RECLAIM or Title V ( ) In RECLAIM ( ) In Title V (●) In RECLAIM & Title V Programs

7. Reason for Submitting Application (Select only ONE):

7a. New Equipment or Process Application:

- ( ) New Construction (Permit to Construct)
- ( ) Equipment On-Site But Not Constructed or Operational
- ( ) Equipment Operating Without A Permit *
- ( ) Compliance Plan
- ( ) Registration/Certification
- ( ) Streamlined Standard Permit

7b. Facility Permits:

- ( ) Title V Application or Amendment (Refer to Title V Matrix)
- ( ) RECLAIM Facility Permit Amendment

7c. Equipment or Process with an Existing/Previous Application or Permit:

- ( ) Administrative Change
- ( ) Alteration/Modification
- ( ) Alteration/Modification without Prior Approval *
- (●) Change of Condition (CO)
- ( ) Change of Condition without Prior Approval *
- ( ) Change of Location
- ( ) Change of Location without Prior Approval *
- ( ) Equipment Operating with an Expired/Inactive Permit *

Existing or Previous Permit/Application
If you checked any of the items in 7c., you MUST provide an existing Permit or Application Number: 496432

* A Higher Permit Processing Fee and additional Annual Operating Fees (up to 3 full years) may apply (Rule 301(c)(1)(D)(i)).

8a. Estimated Start Date of Construction (mm/dd/yyyy): 09/01/2014
8b. Estimated End Date of Construction (mm/dd/yyyy): 10/15/2014
8c. Estimated Start Date of Operation (mm/dd/yyyy): 10/15/2014

9. Description of Equipment or Reason for Compliance Plan (list applicable rule):
Pot Furnace #9 (D30) change of condition to restrict arsenic addition

10. For Identical equipment, how many additional applications are being submitted with this application? (Form 400-A required for each equipment / process): 11

11. Are you a Small Business as per AQMD's Rule 102 definition? (10 employees or less and total gross receipts are $500,000 or less OR a not-for-profit training center) (●) No ( ) Yes

12. Has a Notice of Violation (NOV) or a Notice to Comply (NC) been issued for this equipment? (●) No ( ) Yes
If Yes, provide NOV/NC#:

Section E - Facility Business Information

13. What type of business is being conducted at this equipment location? Secondary lead smelter

14. What is your business primary NAICS Code? (North American Industrial Classification System): 331492

15. Are there other facilities in the SCAQMD jurisdiction operated by the same operator? ( ) No (●) Yes

16. Are there any schools (K-12) within 1000 feet of the facility property line? (●) No ( ) Yes

Section F - Authorization/Signature

I hereby certify that all information contained herein and information submitted with this application are true and correct.

17. Signature of Responsible Official: J Hogarth

18. Title of Responsible Official: Plant Manager

19. I wish to review the permit prior to issuance. (This may cause a delay in the application process.) ( ) No ( ) Yes

20. Print Name: John Hogarth

21. Date: 4/10/14.

22. Do you claim confidentiality of data? (If Yes, see instructions.) ( ) No ( ) Yes

23. Check List: [X] Authorized Signature/Date [X] Form 400-CEQA [X] Supplemental Form(s) (ie., Form 400-E-xx) [X] Fees Enclosed

AQMD USE ONLY	APPLICATION TRACKING #	CHECK #	AMOUNT RECEIVED	PAYMENT TRACKING #	VALIDATION
	562509 4/11/14	6057075	$ 50056.73	114910	4/10/14 mc

DATE	APP REJ	DATE	APP REJ	CLASS I III	BASIC CONTROL	EQUIPMENT CATEGORY CODE	TEAM	ENGINEER	REASON/ACTION TAKEN
							A		

© South Coast Air Quality Management District, Form 400-A (2012.07)

13/18

South Coast Air Quality Management District

Form 400-A

Application Form for Permit or Plan Approval

List only one piece of equipment or process per form.

Mail To:
SCAQMD
P.O. Box 4944
Diamond Bar, CA 91765-0944

Tel: (909) 396-3385
www.aqmd.gov

Section A - Operator Information

1. Facility Name (Business Name of Operator to Appear on the Permit): Exide Technologies

2. Valid AQMD Facility ID (Available On Permit Or Invoice Issued By AQMD): 124838

3. Owner's Business Name (If different from Business Name of Operator):

Section B - Equipment Location Address

4. Equipment Location Is: (●) Fixed Location ( ) Various Location
(For equipment operated at various locations, provide address of initial site.)

Street Address: 2700 S. Indiana Street
City: Vernon, CA Zip: 90058
Contact Name: Ed Mopas Title: Environmental Manager
Phone #: (323) 262-1101 Ext. 259 Fax #: (323) 262-0642
E-Mail: ed.mopas@exide.com

Section C - Permit Mailing Address

5. Permit and Correspondence Information:
[X] Check here if same as equipment location address

Address: 2700 S. Indiana Street
City: Vernon State: CA Zip: 90058
Contact Name: Ed Mopas Title: Environmental Manager
Phone #: (323) 262-1101 Ext. 259 Fax #: (323) 262-0642
E-Mail: ed.mopas@exide.com

Section D - Application Type

6. The Facility Is: ( ) Not In RECLAIM or Title V ( ) In RECLAIM ( ) In Title V (●) In RECLAIM & Title V Programs

7. Reason for Submitting Application (Select only ONE):

7a. New Equipment or Process Application:

- ( ) New Construction (Permit to Construct)
- ( ) Equipment On-Site But Not Constructed or Operational
- ( ) Equipment Operating Without A Permit *
- ( ) Compliance Plan
- ( ) Registration/Certification
- ( ) Streamlined Standard Permit

7b. Facility Permits:

- ( ) Title V Application or Amendment (Refer to Title V Matrix)
- ( ) RECLAIM Facility Permit Amendment

7c. Equipment or Process with an Existing/Previous Application or Permit:

- ( ) Administrative Change
- ( ) Alteration/Modification
- ( ) Alteration/Modification without Prior Approval *
- (●) Change of Condition (LD)
- ( ) Change of Condition without Prior Approval *
- ( ) Change of Location
- ( ) Change of Location without Prior Approval *
- ( ) Equipment Operating with an Expired/Inactive Permit *

Existing or Previous Permit/Application
If you checked any of the items in 7c., you MUST provide an existing Permit or Application Number: 533210

* A Higher Permit Processing Fee and additional Annual Operating Fees (up to 3 full years) may apply (Rule 301(c)(1)(D)(i)).

8a. Estimated Start Date of Construction (mm/dd/yyyy): 09/01/2014
8b. Estimated End Date of Construction (mm/dd/yyyy): 10/15/2014
8c. Estimated Start Date of Operation (mm/dd/yyyy): 10/15/2014

9. Description of Equipment or Reason for Compliance Plan (list applicable rule): Pot Furnace A (D17) change of condition to restrict arsenic addition

10. For Identical equipment, how many additional applications are being submitted with this application? (Form 400-A required for each equipment / process): 11

11. Are you a Small Business as per AQMD's Rule 102 definition? (10 employees or less and total gross receipts are $500,000 or less OR a not-for-profit training center) (●) No ( ) Yes

12. Has a Notice of Violation (NOV) or a Notice to Comply (NC) been issued for this equipment? (●) No ( ) Yes
If Yes, provide NOV/NC#:

Section E - Facility Business Information

13. What type of business is being conducted at this equipment location? Secondary lead smelter

14. What is your business primary NAICS Code? (North American Industrial Classification System): 331492

15. Are there other facilities in the SCAQMD jurisdiction operated by the same operator? ( ) No (●) Yes

16. Are there any schools (K-12) within 1000 feet of the facility property line? (●) No ( ) Yes

Section F - Authorization/Signature

I hereby certify that all information contained herein and information submitted with this application are true and correct.

17. Signature of Responsible Official: J. Hogarth

18. Title of Responsible Official: Plant Manager

19. I wish to review the permit prior to issuance. (This may cause a delay in the application process.) ( ) No ( ) Yes

20. Print Name: John Hogarth

21. Date: 4/10/14.

22. Do you claim confidentiality of data? (If Yes, see instructions.) ( ) No ( ) Yes

23. Check List: [X] Authorized Signature/Date [X] Form 400-CEQA [X] Supplemental Form(s) (ie., Form 400-E-xx) [X] Fees Enclosed

AQMD USE ONLY	APPLICATION TRACKING #	CHECK #	AMOUNT RECEIVED	PAYMENT TRACKING #	VALIDATION
	562510 605707		$ 50056.73	CT114910	4/10/14 mz

DATE	APP REJ	DATE	APP REJ	CLASS I III	BASIC CONTROL	EQUIPMENT CATEGORY CODE	TEAM	ENGINEER	REASON/ACTION TAKEN
							A		

© South Coast Air Quality Management District, Form 400-A (2012.07)

14/18

South Coast Air Quality Management District

Form 400-A
Application Form for Permit or Plan Approval

List only one piece of equipment or process per form.

Mail To:
SCAQMD
P.O. Box 4944
Diamond Bar, CA 91765-0944
Tel: (909) 396-3385
www.aqmd.gov

Section A - Operator Information

1. Facility Name (Business Name of Operator to Appear on the Permit): Exide Technologies

2. Valid AQMD Facility ID (Available On Permit Or Invoice Issued By AQMD): 124838

3. Owner's Business Name (If different from Business Name of Operator):

Section B - Equipment Location Address

4. Equipment Location Is: (●) Fixed Location ( ) Various Location
(For equipment operated at various locations, provide address of initial site.)

Street Address: 2700 S. Indiana Street
City: Vernon, CA Zip: 90058
Contact Name: Ed Mopas Title: Environmental Manager
Phone #: (323) 262-1101 Ext. 259 Fax #: (323) 262-0642
E-Mail: ed.mopas@exide.com

Section C - Permit Mailing Address

5. Permit and Correspondence Information:
[X] Check here if same as equipment location address

Address: 2700 S. Indiana Street
City: Vernon, State: CA Zip: 90058
Contact Name: Ed Mopas Title: Environmental Manager
Phone #: (323) 262-1101 Ext. 259 Fax #: (323) 262-0642
E-Mail: ed.mopas@exide.com

Section D - Application Type

6. The Facility Is: ( ) Not In RECLAIM or Title V ( ) In RECLAIM ( ) In Title V (●) In RECLAIM & Title V Programs

7. Reason for Submitting Application (Select only ONE):

7a. New Equipment or Process Application:
- ( ) New Construction (Permit to Construct)
- ( ) Equipment On-Site But Not Constructed or Operational
- ( ) Equipment Operating Without A Permit *
- ( ) Compliance Plan
- ( ) Registration/Certification
- ( ) Streamlined Standard Permit

7b. Facility Permits:
- ( ) Title V Application or Amendment (Refer to Title V Matrix)
- ( ) RECLAIM Facility Permit Amendment

7c. Equipment or Process with an Existing/Previous Application or Permit:
- ( ) Administrative Change
- ( ) Alteration/Modification
- ( ) Alteration/Modification without Prior Approval *
- (●) Change of Condition (COC)
- ( ) Change of Condition without Prior Approval *
- ( ) Change of Location
- ( ) Change of Location without Prior Approval *
- ( ) Equipment Operating with an Expired/Inactive Permit *

Existing or Previous Permit/Application
If you checked any of the items in 7c., you MUST provide an existing Permit or Application Number: 533211

* A Higher Permit Processing Fee and additional Annual Operating Fees (up to 3 full years) may apply (Rule 301(c)(1)(D)(i)).

8a. Estimated Start Date of Construction (mm/dd/yyyy): 09/01/2014
8b. Estimated End Date of Construction (mm/dd/yyyy): 10/15/2014
8c. Estimated Start Date of Operation (mm/dd/yyyy): 10/15/2014

9. Description of Equipment or Reason for Compliance Plan (list applicable rule):
Pot Furnace B (D19) change of condition to restrict arsenic addition

10. For Identical equipment, how many additional applications are being submitted with this application? (Form 400-A required for each equipment / process): 11

11. Are you a Small Business as per AQMD's Rule 102 definition? (10 employees or less and total gross receipts are $500,000 or less OR a not-for-profit training center) (●) No ( ) Yes

12. Has a Notice of Violation (NOV) or a Notice to Comply (NC) been issued for this equipment? (●) No ( ) Yes
If Yes, provide NOV/NC#:

Section E - Facility Business Information

13. What type of business is being conducted at this equipment location? Secondary lead smelter

14. What is your business primary NAICS Code? (North American Industrial Classification System) 331492

15. Are there other facilities in the SCAQMD jurisdiction operated by the same operator? ( ) No (●) Yes

16. Are there any schools (K-12) within 1000 feet of the facility property line? (●) No ( ) Yes

Section F - Authorization/Signature

I hereby certify that all information contained herein and information submitted with this application are true and correct.

17. Signature of Responsible Official: Hogarth

18. Title of Responsible Official: Plant Manager

19. I wish to review the permit prior to issuance. (This may cause a delay in the application process.) ( ) No ( ) Yes

20. Print Name: John Hogarth

21. Date: 4/10/14

22. Do you claim confidentiality of data? (If Yes, see instructions.) ( ) No ( ) Yes

23. Check List: [X] Authorized Signature/Date [X] Form 400-CEQA [X] Supplemental Form(s) (ie., Form 400-E-xx) [X] Fees Enclosed

AQMD USE ONLY	APPLICATION TRACKING #	CHECK #	AMOUNT RECEIVED	PAYMENT TRACKING #	VALIDATION
	562511	6057075	$ 5005673	CT 114910	4/10/14 me

DATE	APP REJ	DATE	APP REJ	CLASS I III	BASIC CONTROL	EQUIPMENT CATEGORY CODE	TEAM	ENGINEER	REASON/ACTION TAKEN
							A		

© South Coast Air Quality Management District, Form 400-A (2012.07)

15/18

South Coast Air Quality Management District

Form 400-A

Application Form for Permit or Plan Approval

List only one piece of equipment or process per form.

Mail To:
SCAQMD
P.O. Box 4944
Diamond Bar, CA 91765-0944

Tel: (909) 396-3385
www.aqmd.gov

Section A - Operator Information

1. Facility Name (Business Name of Operator to Appear on the Permit): Exide Technologies

2. Valid AQMD Facility ID (Available On Permit Or Invoice Issued By AQMD): 124838

3. Owner's Business Name (If different from Business Name of Operator):

Section B - Equipment Location Address

4. Equipment Location Is: (●) Fixed Location ( ) Various Location
(For equipment operated at various locations, provide address of initial site.)

Street Address: 2700 S. Indiana Street
City: Vernon, CA Zip: 90058
Contact Name: Ed Mopas Title: Environmental Manager
Phone #: (323) 262-1101 Ext. 259 Fax #: (323) 262-0642
E-Mail: ed.mopas@exide.com

Section C - Permit Mailing Address

5. Permit and Correspondence Information:
[X] Check here if same as equipment location address

Address: 2700 S. Indiana Street
City: Vernon State: CA Zip: 90058
Contact Name: Ed Mopas Title: Environmental Manager
Phone #: (323) 262-1101 Ext. 259 Fax #: (323) 262-0642
E-Mail: ed.mopas@exide.com

Section D - Application Type

6. The Facility Is: ( ) Not In RECLAIM or Title V ( ) In RECLAIM ( ) In Title V (●) In RECLAIM & Title V Programs

7. Reason for Submitting Application (Select only ONE):

7a. New Equipment or Process Application:

- ( ) New Construction (Permit to Construct)
- ( ) Equipment On-Site But Not Constructed or Operational
- ( ) Equipment Operating Without A Permit *
- ( ) Compliance Plan
- ( ) Registration/Certification
- ( ) Streamlined Standard Permit

7b. Facility Permits:

- ( ) Title V Application or Amendment (Refer to Title V Matrix)
- ( ) RECLAIM Facility Permit Amendment

7c. Equipment or Process with an Existing/Previous Application or Permit:

- ( ) Administrative Change
- ( ) Alteration/Modification
- ( ) Alteration/Modification without Prior Approval *
- (●) Change of Condition (100)
- ( ) Change of Condition without Prior Approval *
- ( ) Change of Location
- ( ) Change of Location without Prior Approval *
- ( ) Equipment Operating with an Expired/Inactive Permit *

Existing or Previous Permit/Application
If you checked any of the items in 7c., you MUST provide an existing Permit or Application Number: 533213

* A Higher Permit Processing Fee and additional Annual Operating Fees (up to 3 full years) may apply (Rule 301(c)(1)(D)(i)).

8a. Estimated Start Date of Construction (mm/dd/yyyy): 09/01/2014
8b. Estimated End Date of Construction (mm/dd/yyyy): 10/15/2014
8c. Estimated Start Date of Operation (mm/dd/yyyy): 10/15/2014

9. Description of Equipment or Reason for Compliance Plan (list applicable rule):
Pot Furnace E (D34) change of condition to restrict arsenic addition

10. For Identical equipment, how many additional applications are being submitted with this application? (Form 400-A required for each equipment / process): 11

11. Are you a Small Business as per AQMD's Rule 102 definition? (10 employees or less and total gross receipts are $500,000 or less OR a not-for-profit training center) (●) No ( ) Yes

12. Has a Notice of Violation (NOV) or a Notice to Comply (NC) been issued for this equipment? (●) No ( ) Yes
If Yes, provide NOV/NC#:

Section E - Facility Business Information

13. What type of business is being conducted at this equipment location?
Secondary lead smelter

14. What is your business primary NAICS Code? (North American Industrial Classification System): 331492

15. Are there other facilities in the SCAQMD jurisdiction operated by the same operator? ( ) No (●) Yes

16. Are there any schools (K-12) within 1000 feet of the facility property line? (●) No ( ) Yes

Section F - Authorization/Signature

I hereby certify that all information contained herein and information submitted with this application are true and correct.

17. Signature of Responsible Official: H Hogarth

18. Title of Responsible Official: Plant Manager

19. I wish to review the permit prior to issuance. (This may cause a delay in the application process.) ( ) No ( ) Yes

20. Print Name: John Hogarth

21. Date: 4/10/14

22. Do you claim confidentiality of data? (If Yes, see instructions.) ( ) No ( ) Yes

23. Check List: [X] Authorized Signature/Date [X] Form 400-CEQA [X] Supplemental Form(s) (ie., Form 400-E-xx) [X] Fees Enclosed

AQMD USE ONLY	APPLICATION TRACKING #	CHECK #	AMOUNT RECEIVED	PAYMENT TRACKING #	VALIDATION
	562512 4/11/14	6057075	$ 5005673	CT 114910	4/10/14

DATE	APP REJ	DATE	APP REJ	CLASS I III	BASIC CONTROL	EQUIPMENT CATEGORY CODE	TEAM	ENGINEER	REASON/ACTION TAKEN
							A		

© South Coast Air Quality Management District, Form 400-A (2012.07)

16/18

South Coast Air Quality Management District

Form 400-A

Application Form for Permit or Plan Approval

List only one piece of equipment or process per form.

Mail To:
SCAQMD
P.O. Box 4944
Diamond Bar, CA 91765-0944
Tel: (909) 396-3385
www.aqmd.gov

Section A - Operator Information

1. Facility Name (Business Name of Operator to Appear on the Permit): Exide Technologies

2. Valid AQMD Facility ID (Available On Permit Or Invoice Issued By AQMD): 124838

3. Owner's Business Name (If different from Business Name of Operator):

Section B - Equipment Location Address

4. Equipment Location Is: (●) Fixed Location ( ) Various Location
(For equipment operated at various locations, provide address of initial site.)

Street Address: 2700 S. Indiana Street
City: Vernon, CA Zip: 90058
Contact Name: Ed Mopas Title: Environmental Manager
Phone #: (323) 262-1101 Ext. 259 Fax #: (323) 262-0642
E-Mail: ed.mopas@exide.com

Section C - Permit Mailing Address

5. Permit and Correspondence Information:
[X] Check here if same as equipment location address

Address: 2700 S. Indiana Street
City: Vernon State: CA Zip: 90058
Contact Name: Ed Mopas Title: Environmental Manager
Phone #: (323) 262-1101 Ext. 259 Fax #: (323) 262-0642
E-Mail: ed.mopas@exide.com

Section D - Application Type

6. The Facility Is: ( ) Not In RECLAIM or Title V ( ) In RECLAIM ( ) In Title V (●) In RECLAIM & Title V Programs

7. Reason for Submitting Application (Select only ONE):

7a. New Equipment or Process Application:
- ( ) New Construction (Permit to Construct)
- ( ) Equipment On-Site But Not Constructed or Operational
- ( ) Equipment Operating Without A Permit *
- ( ) Compliance Plan
- ( ) Registration/Certification
- ( ) Streamlined Standard Permit

7b. Facility Permits:
- ( ) Title V Application or Amendment (Refer to Title V Matrix)
- ( ) RECLAIM Facility Permit Amendment

7c. Equipment or Process with an Existing/Previous Application or Permit:
- ( ) Administrative Change
- ( ) Alteration/Modification
- ( ) Alteration/Modification without Prior Approval *
- (●) Change of Condition (60)
- ( ) Change of Condition without Prior Approval *
- ( ) Change of Location
- ( ) Change of Location without Prior Approval *
- ( ) Equipment Operating with an Expired/Inactive Permit *

Existing or Previous Permit/Application
If you checked any of the items in 7c., you MUST provide an existing Permit or Application Number: 533214

* A Higher Permit Processing Fee and additional Annual Operating Fees (up to 3 full years) may apply (Rule 301(c)(1)(D)(ii)).

8a. Estimated Start Date of Construction (mm/dd/yyyy): 09/01/2014
8b. Estimated End Date of Construction (mm/dd/yyyy): 10/15/2014
8c. Estimated Start Date of Operation (mm/dd/yyyy): 10/15/2014

9. Description of Equipment or Reason for Compliance Plan (list applicable rule):
Pot Furnace F (D36) change of condition to restrict arsenic addition

10. For Identical equipment, how many additional applications are being submitted with this application? (Form 400-A required for each equipment / process): 11

11. Are you a Small Business as per AQMD's Rule 102 definition? (10 employees or less and total gross receipts are $500,000 or less OR a not-for-profit training center) (●) No ( ) Yes

12. Has a Notice of Violation (NOV) or a Notice to Comply (NC) been issued for this equipment? (●) No ( ) Yes
If Yes, provide NOV/NC#:

Section E - Facility Business Information

13. What type of business is being conducted at this equipment location? Secondary lead smelter

14. What is your business primary NAICS Code? (North American Industrial Classification System) 331492

15. Are there other facilities in the SCAQMD jurisdiction operated by the same operator? ( ) No (●) Yes

16. Are there any schools (K-12) within 1000 feet of the facility property line? (●) No ( ) Yes

Section F - Authorization/Signature

I hereby certify that all information contained herein and information submitted with this application are true and correct.

17. Signature of Responsible Official: H Hogarth

18. Title of Responsible Official: Plant Manager

19. I wish to review the permit prior to issuance. (This may cause a delay in the application process.) ( ) No ( ) Yes

20. Print Name: John Hogarth

21. Date: 4/10/14

22. Do you claim confidentiality of data? (If Yes, see instructions.) ( ) No ( ) Yes

23. Check List: [X] Authorized Signature/Date [X] Form 400-CEQA [X] Supplemental Form(s) (ie., Form 400-E-xx) [X] Fees Enclosed

AQMD USE ONLY	APPLICATION TRACKING #	CHECK #	AMOUNT RECEIVED	PAYMENT TRACKING #	VALIDATION
	562513 4/4/14	6057075	$ 5005.73	CT 14910	4/10/14

DATE	APP REJ	DATE	APP REJ	CLASS I III	BASIC CONTROL	EQUIPMENT CATEGORY CODE	TEAM	ENGINEER	REASON/ACTION TAKEN
							A		

© South Coast Air Quality Management District, Form 400-A (2012.07)

17/18

South Coast Air Quality Management District

Form 400-A

Application Form for Permit or Plan Approval

List only one piece of equipment or process per form.

Mail To:
SCAQMD
P.O. Box 4944
Diamond Bar, CA 91765-0944

Tel: (909) 396-3385
www.aqmd.gov

Section A - Operator Information

1. Facility Name (Business Name of Operator to Appear on the Permit): Exide Technologies

2. Valid AQMD Facility ID (Available On Permit Or Invoice Issued By AQMD): 124838

3. Owner's Business Name (If different from Business Name of Operator):

Section B - Equipment Location Address

4. Equipment Location Is: (●) Fixed Location ( ) Various Location
(For equipment operated at various locations, provide address of initial site.)

Street Address: 2700 S. Indiana Street
City: Vernon, CA Zip: 90058
Contact Name: Ed Mopas Title: Environmental Manager
Phone #: (323) 262-1101 Ext. 259 Fax #: (323) 262-0642
E-Mail: ed.mopas@exide.com

Section C - Permit Mailing Address

5. Permit and Correspondence Information:
[X] Check here if same as equipment location address

Address: 2700 S. Indiana Street
City: Vernon State: CA Zip: 90058
Contact Name: Ed Mopas Title: Environmental Manager
Phone #: (323) 262-1101 Ext. 259 Fax #: (323) 262-0642
E-Mail: ed.mopas@exide.com

Section D - Application Type

6. The Facility Is: ( ) Not In RECLAIM or Title V ( ) In RECLAIM ( ) In Title V (●) In RECLAIM & Title V Programs

7. Reason for Submitting Application (Select only ONE):

7a. New Equipment or Process Application:

- ( ) New Construction (Permit to Construct)
- ( ) Equipment On-Site But Not Constructed or Operational
- ( ) Equipment Operating Without A Permit *
- ( ) Compliance Plan
- ( ) Registration/Certification
- ( ) Streamlined Standard Permit

7b. Facility Permits:

- ( ) Title V Application or Amendment (Refer to Title V Matrix)
- ( ) RECLAIM Facility Permit Amendment

7c. Equipment or Process with an Existing/Previous Application or Permit:

- ( ) Administrative Change
- ( ) Alteration/Modification
- ( ) Alteration/Modification without Prior Approval *
- (●) Change of Condition (120)
- ( ) Change of Condition without Prior Approval *
- ( ) Change of Location
- ( ) Change of Location without Prior Approval *
- ( ) Equipment Operating with an Expired/Inactive Permit *

Existing or Previous Permit/Application
If you checked any of the items in 7c., you MUST provide an existing Permit or Application Number: 533215

* A Higher Permit Processing Fee and additional Annual Operating Fees (up to 3 full years) may apply (Rule 301(c)(1)(D)(i)).

8a. Estimated Start Date of Construction (mm/dd/yyyy): 09/01/2014
8b. Estimated End Date of Construction (mm/dd/yyyy): 10/15/2014
8c. Estimated Start Date of Operation (mm/dd/yyyy): 10/15/2014

9. Description of Equipment or Reason for Compliance Plan (list applicable rule): Pot Furnace G (D32) change of condition to restrict arsenic addition

10. For Identical equipment, how many additional applications are being submitted with this application? (Form 400-A required for each equipment / process): 11

11. Are you a Small Business as per AQMD's Rule 102 definition? (10 employees or less and total gross receipts are $500,000 or less OR a not-for-profit training center) (●) No ( ) Yes

12. Has a Notice of Violation (NOV) or a Notice to Comply (NC) been issued for this equipment? (●) No ( ) Yes
If Yes, provide NOV/NC#:

Section E - Facility Business Information

13. What type of business is being conducted at this equipment location? Secondary lead smelter

14. What is your business primary NAICS Code? (North American Industrial Classification System): 331492

15. Are there other facilities in the SCAQMD jurisdiction operated by the same operator? ( ) No (●) Yes

16. Are there any schools (K-12) within 1000 feet of the facility property line? (●) No ( ) Yes

Section F - Authorization/Signature

I hereby certify that all information contained herein and information submitted with this application are true and correct.

17. Signature of Responsible Official: [signature]

18. Title of Responsible Official: Plant Manager

19. I wish to review the permit prior to issuance. (This may cause a delay in the application process.) ( ) No ( ) Yes

20. Print Name: John Hogarth

21. Date: 4/10/14.

22. Do you claim confidentiality of data? (If Yes, see instructions.) ( ) No ( ) Yes

23. Check List: [X] Authorized Signature/Date [X] Form 400-CEQA [X] Supplemental Form(s) (ie., Form 400-E-xx) [X] Fees Enclosed

AQMD USE ONLY	APPLICATION TRACKING #	CHECK #	AMOUNT RECEIVED	PAYMENT TRACKING #	VALIDATION
	5602514	6057075	$ 5005673	CT114910	4/10/14

DATE	APP REJ	DATE	APP REJ	CLASS I III	BASIC CONTROL	EQUIPMENT CATEGORY CODE	TEAM	ENGINEER	REASON/ACTION TAKEN
							A		

© South Coast Air Quality Management District, Form 400-A (2012.07)

18/18

South Coast Air Quality Management District

Form 400-A

Application Form for Permit or Plan Approval

List only one piece of equipment or process per form.

Mail To:
SCAQMD
P.O. Box 4944
Diamond Bar, CA 91765-0944

Tel: (909) 396-3385
www.aqmd.gov

Section A - Operator Information

1. Facility Name (Business Name of Operator to Appear on the Permit): Exide Technologies

2. Valid AQMD Facility ID (Available On Permit Or Invoice Issued By AQMD): 124838

3. Owner's Business Name (If different from Business Name of Operator):

Section B - Equipment Location Address

4. Equipment Location Is: (●) Fixed Location ( ) Various Location
(For equipment operated at various locations, provide address of initial site.)

Street Address: 2700 S. Indiana Street
City: Vernon, CA Zip: 90058
Contact Name: Ed Mopas Title: Environmental Manager
Phone #: (323) 262-1101 Ext. 259 Fax #: (323) 262-0642
E-Mail: ed.mopas@exide.com

Section C - Permit Mailing Address

5. Permit and Correspondence Information:
[X] Check here if same as equipment location address

Address: 2700 S. Indiana Street
City: Vernon, State: CA Zip: 90058
Contact Name: Ed Mopas Title: Environmental Manager
Phone #: (323) 262-1101 Ext. 259 Fax #: (323) 262-0642
E-Mail: ed.mopas@exide.com

Section D - Application Type

6. The Facility Is: ( ) Not In RECLAIM or Title V ( ) In RECLAIM ( ) In Title V (●) In RECLAIM & Title V Programs

7. Reason for Submitting Application (Select only ONE):

7a. New Equipment or Process Application:
- ( ) New Construction (Permit to Construct)
- ( ) Equipment On-Site But Not Constructed or Operational
- ( ) Equipment Operating Without A Permit *
- ( ) Compliance Plan
- ( ) Registration/Certification
- ( ) Streamlined Standard Permit

7b. Facility Permits:
- ( ) Title V Application or Amendment (Refer to Title V Matrix)
- ( ) RECLAIM Facility Permit Amendment

7c. Equipment or Process with an Existing/Previous Application or Permit:
- ( ) Administrative Change
- (●) Alteration/Modification (530)
- ( ) Alteration/Modification without Prior Approval *
- ( ) Change of Condition
- ( ) Change of Condition without Prior Approval *
- ( ) Change of Location
- ( ) Change of Location without Prior Approval *
- ( ) Equipment Operating with an Expired/Inactive Permit *

Existing or Previous Permit/Application
If you checked any of the items in 7c., you MUST provide an existing Permit or Application Number: 533205

* A Higher Permit Processing Fee and additional Annual Operating Fees (up to 3 full years) may apply (Rule 301(c)(1)(D)(i)).

8a. Estimated Start Date of Construction (mm/dd/yyyy): 09/01/2014
8b. Estimated End Date of Construction (mm/dd/yyyy): 10/15/2014
8c. Estimated Start Date of Operation (mm/dd/yyyy): 10/15/2014

9. Description of Equipment or Reason for Compliance Plan (list applicable rule):
Pot Furnace #1 (D7) modification to redirect ventilation from baghouse C46 to C41 and C45 and to allow for arsenic addition

10. For identical equipment, how many additional applications are being submitted with this application? (Form 400-A required for each equipment / process): 1

11. Are you a Small Business as per AQMD's Rule 102 definition? (10 employees or less and total gross receipts are $500,000 or less OR a not-for-profit training center) (●) No ( ) Yes

12. Has a Notice of Violation (NOV) or a Notice to Comply (NC) been issued for this equipment? (●) No ( ) Yes
If Yes, provide NOV/NC#:

Section E - Facility Business Information

13. What type of business is being conducted at this equipment location? Secondary lead smelter

14. What is your business primary NAICS Code? (North American Industrial Classification System): 331492

15. Are there other facilities in the SCAQMD jurisdiction operated by the same operator? ( ) No (●) Yes

16. Are there any schools (K-12) within 1000 feet of the facility property line? (●) No ( ) Yes

Section F - Authorization/Signature

I hereby certify that all information contained herein and information submitted with this application are true and correct.

17. Signature of Responsible Official: Hogarth

18. Title of Responsible Official: Plant Manager

19. I wish to review the permit prior to issuance. (This may cause a delay in the application process.) ( ) No ( ) Yes

20. Print Name: John Hogarth

21. Date: 4/10/14.

22. Do you claim confidentiality of data? (If Yes, see instructions.) ( ) No ( ) Yes

23. Check List: [X] Authorized Signature/Date [X] Form 400-CEQA [X] Supplemental Form(s) (ie., Form 400-E-xx) [X] Fees Enclosed

AQMD USE ONLY	APPLICATION TRACKING #	CHECK #	AMOUNT RECEIVED	PAYMENT TRACKING #	VALIDATION
	562515	6057075	$ 5056.73	CT 114910	4/10/14 mr

DATE	APP REJ	DATE	APP REJ	CLASS I III	BASIC CONTROL	EQUIPMENT CATEGORY CODE	TEAM	ENGINEER	REASON/ACTION TAKEN
							6		

© South Coast Air Quality Management District, Form 400-A (2012.07)

7/18

South Coast Air Quality Management District

Form 400-A

Application Form for Permit or Plan Approval

List only one piece of equipment or process per form.

Mail To:
SCAQMD
P.O. Box 4944
Diamond Bar, CA 91765-0944
Tel: (909) 396-3385
www.aqmd.gov

Section A - Operator Information

1. Facility Name (Business Name of Operator to Appear on the Permit): Exide Technologies

2. Valid AQMD Facility ID (Available On Permit Or Invoice Issued By AQMD): 124838

3. Owner's Business Name (If different from Business Name of Operator):

Section B - Equipment Location Address

4. Equipment Location Is: (●) Fixed Location ( ) Various Location
(For equipment operated at various locations, provide address of initial site.)

Street Address: 2700 S. Indiana Street
City: Vernon, CA Zip: 90058
Contact Name: Ed Mopas Title: Environmental Manager
Phone #: (323) 262-1101 Ext. 259 Fax #: (323) 262-0642
E-Mail: ed.mopas@exide.com

Section C - Permit Mailing Address

5. Permit and Correspondence Information:
[X] Check here if same as equipment location address

Address: 2700 S. Indiana Street
City: Vernon, CA State Zip: 90058
Contact Name: Ed Mopas Title: Environmental Manager
Phone #: (323) 262-1101 Ext. 259 Fax #: (323) 262-0642
E-Mail: ed.mopas@exide.com

Section D - Application Type

6. The Facility Is: ( ) Not In RECLAIM or Title V ( ) In RECLAIM ( ) In Title V (●) In RECLAIM & Title V Programs

7. Reason for Submitting Application (Select only ONE):

7a. New Equipment or Process Application:
- ( ) New Construction (Permit to Construct)
- ( ) Equipment On-Site But Not Constructed or Operational
- ( ) Equipment Operating Without A Permit *
- ( ) Compliance Plan
- ( ) Registration/Certification
- ( ) Streamlined Standard Permit

7b. Facility Permits:
- ( ) Title V Application or Amendment (Refer to Title V Matrix)
- ( ) RECLAIM Facility Permit Amendment

7c. Equipment or Process with an Existing/Previous Application or Permit:
- ( ) Administrative Change
- (●) Alteration/Modification
- ( ) Alteration/Modification without Prior Approval *
- ( ) Change of Condition
- ( ) Change of Condition without Prior Approval *
- ( ) Change of Location
- ( ) Change of Location without Prior Approval *
- ( ) Equipment Operating with an Expired/Inactive Permit *

Existing or Previous Permit/Application
If you checked any of the items in 7c., you MUST provide an existing Permit or Application Number: 559500

* A Higher Permit Processing Fee and additional Annual Operating Fees (up to 3 full years) may apply (Rule 301(c)(1)(D)(i)).

8a. Estimated Start Date of Construction (mm/dd/yyyy): 09/01/2014
8b. Estimated End Date of Construction (mm/dd/yyyy): 10/15/2014
8c. Estimated Start Date of Operation (mm/dd/yyyy): 10/15/2014

9. Description of Equipment or Reason for Compliance Plan (list applicable rule): Modify Reverb Furnace by venting furnace to modified APCS 1

10. For identical equipment, how many additional applications are being submitted with this application? (Form 400-A required for each equipment / process): 0

11. Are you a Small Business as per AQMD's Rule 102 definition? (10 employees or less and total gross receipts are $500,000 or less OR a not-for-profit training center) (●) No ( ) Yes

12. Has a Notice of Violation (NOV) or a Notice to Comply (NC) been issued for this equipment? (●) No ( ) Yes
If Yes, provide NOV/NC#:

Section E - Facility Business Information

13. What type of business is being conducted at this equipment location? Secondary lead smelter

14. What is your business primary NAICS Code? (North American Industrial Classification System): 331492

15. Are there other facilities in the SCAQMD jurisdiction operated by the same operator? ( ) No (●) Yes

16. Are there any schools (K-12) within 1000 feet of the facility property line? (●) No ( ) Yes

Section F - Authorization/Signature

I hereby certify that all information contained herein and information submitted with this application are true and correct.

17. Signature of Responsible Official: [signature]

18. Title of Responsible Official: Plant Manager

19. I wish to review the permit prior to issuance. (This may cause a delay in the application process.) ( ) No (●) Yes

20. Print Name: John Hogarth

21. Date: 05/23/2014

22. Do you claim confidentiality of data? (If Yes, see instructions.) ( ) No (●) Yes

23. Check List: [X] Authorized Signature/Date [X] Form 400-CEQA [X] Supplemental Form(s) (ie., Form 400-E-xx) [X] Fees Enclosed

AQMD USE ONLY	APPLICATION TRACKING #	CHECK #	AMOUNT RECEIVED	PAYMENT TRACKING #	VALIDATION
	509346	6066579	14,528.52	CT115913	5/27/14

DATE	APP REJ	DATE	APP REJ	CLASS	BASIC CONTROL	EQUIPMENT CATEGORY CODE	TEAM	ENGINEER	REASON/ACTION TAKEN
5-28-14				I / III		001540			

© South Coast Air Quality Management District, Form 400-A (2012.07)

RECEIVED
2014 JUN 02 PM 3:15

1/2

South Coast Air Quality Management District

Form 400-A

Application Form for Permit or Plan Approval

List only one piece of equipment or process per form.

Mail To:
SCAQMD
P.O. Box 4944
Diamond Bar, CA 91765-0944
Tel: (909) 396-3385
www.aqmd.gov

Section A - Operator Information

1. Facility Name (Business Name of Operator to Appear on the Permit): Exide Technologies

2. Valid AQMD Facility ID (Available On Permit Or Invoice Issued By AQMD): 124838

3. Owner's Business Name (If different from Business Name of Operator):

Section B - Equipment Location Address

4. Equipment Location Is: (●) Fixed Location ( ) Various Location
(For equipment operated at various locations, provide address of initial site.)

2700 S. Indiana Street
Street Address
Vernon, CA 90058
City Zip
Ed Mopas — Environmental Manager
Contact Name — Title
(323) 262-1101 259 (323) 262-0642
Phone # Ext. Fax #
E-Mail: ed.mopas@exide.com

Section C - Permit Mailing Address

5. Permit and Correspondence Information:
[X] Check here if same as equipment location address

2700 S. Indiana Street
Address
Vernon, CA 90058
City State Zip
Ed Mopas — Environmental Manager
Contact Name — Title
(323) 262-1101 259 (323) 262-0642
Phone # Ext. Fax #
E-Mail: ed.mopas@exide.com

Section D - Application Type

6. The Facility Is: ( ) Not In RECLAIM or Title V ( ) In RECLAIM ( ) In Title V (●) In RECLAIM & Title V Programs

7. Reason for Submitting Application (Select only ONE):

7a. New Equipment or Process Application:

- ( ) New Construction (Permit to Construct)
- ( ) Equipment On-Site But Not Constructed or Operational
- ( ) Equipment Operating Without A Permit *
- ( ) Compliance Plan
- ( ) Registration/Certification
- ( ) Streamlined Standard Permit

7b. Facility Permits:

- ( ) Title V Application or Amendment (Refer to Title V Matrix)
- ( ) RECLAIM Facility Permit Amendment

7c. Equipment or Process with an Existing/Previous Application or Permit:

- ( ) Administrative Change
- (●) Alteration/Modification
- ( ) Alteration/Modification without Prior Approval *
- ( ) Change of Condition
- ( ) Change of Condition without Prior Approval *
- ( ) Change of Location
- ( ) Change of Location without Prior Approval *
- ( ) Equipment Operating with an Expired/Inactive Permit *

Existing or Previous Permit/Application
If you checked any of the items in 7c., you MUST provide an existing Permit or Application Number: 558213

* A Higher Permit Processing Fee and additional Annual Operating Fees (up to 3 full years) may apply (Rule 301(c)(1)(D)(i)).

8a. Estimated Start Date of Construction (mm/dd/yyyy): 09/01/2014
8b. Estimated End Date of Construction (mm/dd/yyyy): 10/15/2014
8c. Estimated Start Date of Operation (mm/dd/yyyy): 10/15/2014

9. Description of Equipment or Reason for Compliance Plan (list applicable rule):
Modification of Hard Lead Baghouse (C46) by removing Blast Furnace Thimble hoods which will be routed to new APCS2

10. For identical equipment, how many additional applications are being submitted with this application? (Form 400-A required for each equipment / process): 0

11. Are you a Small Business as per AQMD's Rule 102 definition? (10 employees or less and total gross receipts are $500,000 or less OR a not-for-profit training center) (●) No ( ) Yes

12. Has a Notice of Violation (NOV) or a Notice to Comply (NC) been issued for this equipment? (●) No ( ) Yes
If Yes, provide NOV/NC#:

Section E - Facility Business Information

13. What type of business is being conducted at this equipment location? Secondary lead smelter

14. What is your business primary NAICS Code? (North American Industrial Classification System) 331492

15. Are there other facilities in the SCAQMD jurisdiction operated by the same operator? ( ) No (●) Yes

16. Are there any schools (K-12) within 1000 feet of the facility property line? (●) No ( ) Yes

Section F - Authorization/Signature

I hereby certify that all information contained herein and information submitted with this application are true and correct.

17. Signature of Responsible Official: [signature]

18. Title of Responsible Official: Plant Manager

19. I wish to review the permit prior to issuance. (This may cause a delay in the application process.) ( ) No (●) Yes

20. Print Name: John Hogarth

21. Date: 05/23/2014

22. Do you claim confidentiality of data? (If Yes, see instructions.) ( ) No (●) Yes

23. Check List: [X] Authorized Signature/Date [X] Form 400-CEQA [X] Supplemental Form(s) (ie., Form 400-E-xx) [X] Fees Enclosed

AQMD USE ONLY	APPLICATION TRACKING #	CHECK #	AMOUNT RECEIVED	PAYMENT TRACKING #	VALIDATION
	564348	6066594	14,528.46	CT115913	5/27/14

DATE	APP REJ	DATE	APP REJ	CLASS	BASIC CONTROL	EQUIPMENT CATEGORY CODE	TEAM	ENGINEER	REASON/ACTION TAKEN
5-28-14				(V) III		31	A		

© South Coast Air Quality Management District, Form 400-A (2012.07)

South Coast Air Quality Management District

Form 400 - XPP

Express Permit Processing Request

Form 400-A, Form 400-CEQA and one or more 400-E-xx form(s) must accompany all submittals.

Mail To:
SCAQMD
P.O Box 4944
Diamond Bar, CA 91765-0944
Tel: (909) 396-3385
www.aqmd.gov

Section A - Operator Information

1. Facility Name (Business Name of Operator To Appear On The Permit): Exide Technologies

2. Valid AQMD Facility ID (Available On Permit Or Invoice Issued By AQMD): 124838

Section B - Equipment Location Address

3. (●) Fixed Location ( ) Various Location
(For equipment operated at various locations, provide address of initial site.)

Street Address: 2700 S. Indiana St.
City: Vernon, State: CA, Zip: 90058
Contact Name: Ed Mopas, Title: Env. Manager
Phone #: (323) 262-1101, Ext. 259, Fax #: (323) 269-1906
E-Mail: ed.mopas@exide.com

Section C - Permit Mailing Address

4. Permit and Correspondence Information:
☑ Check here if same as equipment location address

Address: 2700 S. Indiana St.
City: Vernon, State: CA, Zip: 90058
Contact Name: Ed Mopas, Title: Env. Manager
Phone #: (323) 262-1101, Ext. 259, Fax #: (323) 269-1906
E-Mail: ed.mopas@exide.com

Section D - Authorization/Signature

I understand that the Expedited Permit Processing fees must be submitted at the time of application submittal, and that the application may be subject to additional fees per Rule 301. I understand that requests for Express Permit Processing neither guarantees action by any specific date nor does it guarantee permit approval; that Express Permit Processing is subject to availability of qualified staff; and that once Express Permit Processing has commenced, the expedited fees will not be refunded. I hereby certify that all information contained herein and information submitted with the application are true and correct.

5. Signature of Responsible Official: Hogarth

6. Title of Responsible Official: Plant Manager

7. Print Name of Responsible Official: John Hogarth

8. Date: 5/22/2014

9. Phone #: (323) 262-1101

10. Fax #: (323) 269-1906

AQMD USE ONLY	APPLICATION TRACKING #	TYPE B C	EQUIPMENT CATEGORY CODE:	FEE SCHEDULE: $		VALIDATION
ENG. A R DATE	ENG. A R DATE	CLASS I III	ASSIGNMENT Unit Engineer	CHECK/MONEY ORDER #	AMOUNT $	TRACKING #

© South Coast Air Quality Management District, Form 400-XPP (2009.04)

South Coast Air Quality Management District

Form 400-A

Application Form for Permit or Plan Approval

List only one piece of equipment or process per form.

Mail To:
SCAQMD
P.O. Box 4944
Diamond Bar, CA 91765-0944

Tel: (909) 396-3385
www.aqmd.gov

Section A - Operator Information

1. Facility Name (Business Name of Operator to Appear on the Permit): Exide Technologies

2. Valid AQMD Facility ID (Available On Permit Or Invoice Issued By AQMD): 124838

3. Owner's Business Name (If different from Business Name of Operator):

Section B - Equipment Location Address

4. Equipment Location Is: (●) Fixed Location ( ) Various Location
(For equipment operated at various locations, provide address of initial site.)

Street Address: 2700 S. Indiana Street
City: Vernon, CA Zip: 90058
Contact Name: Ed Mopas Title: Environmental Manager
Phone #: (323) 262-1101 Ext. 259 Fax #: (323) 262-0642
E-Mail: ed.mopas@exide.com

Section C - Permit Mailing Address

5. Permit and Correspondence Information:
[X] Check here if same as equipment location address

Address: 2700 S. Indiana Street
City: Vernon, State: CA Zip: 90058
Contact Name: Ed Mopas Title: Environmental Manager
Phone #: (323) 262-1101 Ext. 259 Fax #: (323) 262-0642
E-Mail: ed.mopas@exide.com

Section D - Application Type

6. The Facility Is: ( ) Not In RECLAIM or Title V ( ) In RECLAIM ( ) In Title V (●) In RECLAIM & Title V Programs

7. Reason for Submitting Application (Select only ONE):

7a. New Equipment or Process Application:

- ( ) New Construction (Permit to Construct)
- ( ) Equipment On-Site But Not Constructed or Operational
- ( ) Equipment Operating Without A Permit *
- ( ) Compliance Plan
- ( ) Registration/Certification
- ( ) Streamlined Standard Permit

7b. Facility Permits:

- ( ) Title V Application or Amendment (Refer to Title V Matrix)
- ( ) RECLAIM Facility Permit Amendment

7c. Equipment or Process with an Existing/Previous Application or Permit:

- ( ) Administrative Change
- (●) Alteration/Modification (90)
- ( ) Alteration/Modification without Prior Approval *
- ( ) Change of Condition
- ( ) Change of Condition without Prior Approval *
- ( ) Change of Location
- ( ) Change of Location without Prior Approval *
- ( ) Equipment Operating with an Expired/Inactive Permit *

Existing or Previous Permit/Application
If you checked any of the items in 7c., you MUST provide an existing Permit or Application Number: 554906

* A Higher Permit Processing Fee and additional Annual Operating Fees (up to 3 full years) may apply (Rule 301(c)(1)(D)(i)).

8a. Estimated Start Date of Construction (mm/dd/yyyy): 09/01/2014
8b. Estimated End Date of Construction (mm/dd/yyyy): 10/15/2014
8c. Estimated Start Date of Operation (mm/dd/yyyy): 10/15/2014

9. Description of Equipment or Reason for Compliance Plan (list applicable rule):
Modifications to Blast Furnace (D128) and associated slag tap (D132) and thimble (D133)

10. For Identical equipment, how many additional applications are being submitted with this application? (Form 400-A required for each equipment / process): 0

11. Are you a Small Business as per AQMD's Rule 102 definition? (10 employees or less and total gross receipts are $500,000 or less OR a not-for-profit training center) (●) No ( ) Yes

12. Has a Notice of Violation (NOV) or a Notice to Comply (NC) been issued for this equipment? (●) No ( ) Yes
If Yes, provide NOV/NC#:

Section E - Facility Business Information

13. What type of business is being conducted at this equipment location? Secondary lead smelter

14. What is your business primary NAICS Code? (North American Industrial Classification System) 331492

15. Are there other facilities in the SCAQMD jurisdiction operated by the same operator? ( ) No (●) Yes

16. Are there any schools (K-12) within 1000 feet of the facility property line? (●) No ( ) Yes

Section F - Authorization/Signature

I hereby certify that all information contained herein and information submitted with this application are true and correct.

17. Signature of Responsible Official: [signature]

18. Title of Responsible Official: Plant Manager

19. I wish to review the permit prior to issuance. (This may cause a delay in the application process.) ( ) No ( ) Yes

20. Print Name: John Hogarth

21. Date: 4/10/14

22. Do you claim confidentiality of data? (If Yes, see instructions.) ( ) No ( ) Yes

23. Check List: [X] Authorized Signature/Date [X] Form 400-CEQA [X] Supplemental Form(s) (ie., Form 400-E-xx) [X] Fees Enclosed

AQMD USE ONLY	APPLICATION TRACKING #	CHECK #	AMOUNT RECEIVED	PAYMENT TRACKING #	VALIDATION
	562501	6057075	$ 50056.73	CT 14910	4/10/14 mc

DATE	APP REJ	DATE	APP REJ	CLASS I III	BASIC CONTROL	EQUIPMENT CATEGORY CODE	TEAM	ENGINEER	REASON/ACTION TAKEN
							A		

© South Coast Air Quality Management District, Form 400-A (2012.07)

4/18

South Coast Air Quality Management District

Public Notice – Routing Checklist

21865 Copley Drive, Diamond Bar, CA 91765-4182
Phone: (909)396-2000

Company Name: Exide Technologies

Facility ID: 124838

Application No: 562500

RECLAIM Facility? ⊙ YES ○ NO

County: ⊙ Los Angeles ○ Orange ○ San Bernardino ○ Riverside

Reasons for Public Notice

(Please check all appropriate boxes)

☑ Title V Notice:
(Check applicable box)

- ☐ Initial Title V Permit
- ☑ Significant Revision
- ☐ Renewal

And / Or

☐ Subject to Rule 212 or Rule 1310 due to:
(Check all applicable boxes)

- ☐ Permit unit located within 1,000 feet of the outer boundary of a school
- ☐ Risk from permit unit is greater than 1 in a million and from the facility is greater than 10 in a million
- ☐ Emissions greater than the thresholds identified in Rule 212(g)
- ☐ Issuance of ERC above the emission threshold levels in Rule 1310(c)
- ☐ Issuance of Short Term Credits (STCs')

OTHER

☐ Proposed Rule 1118 Flare Minimization Plan ☐ Rule 1714 Comments.

Newspaper Public Notice Dates: (MM/DD/YYYY)

Publication Date: 10/17/2014

Public Hearing Request Due Date: 11/03/2014

Written Comments Due Date: 11/17/2014

Reset Print