UNITED STATES ENVIRONMENTAL PROTECTION AGENCY
Office of Enforcement and Compliance Assurance
Office of Criminal Enforcement, Forensics and Training

ENFORCEMENT CONFIDENTIAL

NEICVP0614E01

MULTIMEDIA COMPLIANCE INVESTIGATION

Formosa Plastics Corporation - Texas
Point Comfort, Texas
Project No. VP0614

April 2005

Volume 1 of 2

Project Leader:
Martha Hamre

Other Contributors:
Armando Bustamante
Ken Garing
Daren Vanlerberghe
Jacquelyn Vega
Joe Wilwerding
Robert Bohn, Principal Analytical Chemist

Prepared for:

EPA Region 6
1445 Ross Avenue
Dallas, Texas

Authorized for Release by:

Diana A. Love, Director

NATIONAL ENFORCEMENT INVESTIGATIONS CENTER
Denver, Colorado

EPA/FOIA2018-00001

CONTENTS

Volume 1

EXECUTIVE SUMMARY

INTRODUCTION 4

OBJECTIVES 4
INVESTIGATION METHODS 5
BACKGROUND 6

Wastewater Discharges 6
Emergency Planning and Community Right-to-Know Act (EPCRA) 8
Hazardous Waste Management 8
Air Emissions 9

SUMMARY OF FINDINGS 10

CLEAN WATER ACT 10

Areas of Noncompliance 10
Areas of Concern 11

EMERGENCY PLANNING AND COMMUNITY RIGHT-TO-KNOW ACT 11

Areas of Noncompliance 11
Areas of Concern 15

RESOURCE CONSERVATION AND RECOVERY ACT 16

Areas of Noncompliance 16
Areas of Concern 17

CLEAN AIR ACT 18

Areas of Noncompliance 18
Areas of Concern 21

PHOTOGRAPH

1 Formosa Plastics Corporation – Point Comfort, Texas 7

TECHNICAL REPORT

CLEAN WATER ACT ..... Tab 1
EMERGENCY PLANNING AND COMMUNITY RIGHT-TO-KNOW ACT ..... Tab 2

EPA/FOIA2018-00002

CONTENTS (continued)

Volume 2 – Contains Confidential Business Information

PROCESS DESCRIPTION/WASTE GENERATION ..... Tab 1
RESOURCE CONSERVATION AND RECOVERY ACT ..... Tab 2
CLEAN AIR ACT ..... Tab 3

The Contents shows all information contained in this report and a clear indication of the end of the report

INTRODUCTION

At the request of U.S. EPA Region 6, the National Enforcement Investigations Center (NEIC) conducted a process-based multimedia compliance investigation of the Formosa Plastics Corporation, Texas plant located in Point Comfort, Texas (Formosa). Formosa is located in Calhoun County on a 1,800-acre industrial complex. There are approximately 1,600 full time employees at Formosa. Formosa (SIC Codes 2821 and 2869/NAICS Codes 325211 and 325199) consists of production facilities for the manufacture of the base and intermediate materials for plastics (olefin compounds, vinyl chloride monomer, and chlorine gas), thermoplastics (PVC, HDPE, LLDPE/LHDPE, and PP), organic chemicals (ethylene glycol), inorganic chemicals (caustics/acids), purified water, steam, and power. There are also service areas for the receipt of raw materials and the transport of product from the facility. Pollution control, waste generation, and management operations for the facility are regulated by environmental permits and regulations administered by the U.S. EPA and the Texas Commission on Environmental Quality (TCEQ).

The NEIC on-site leak detection and repair (LDAR) inspection was conducted from November 17 through 20, 2003. The NEIC on-site multimedia inspection was conducted from February 2 through 12, 2004. Findings from the LDAR inspection and multimedia inspection will be addressed in this report. Inspectors from U.S. EPA Region 6 and TCEQ participated during both on-site inspections

OBJECTIVES

Formosa operations and associated waste streams are subject to the major environmental statutes, including the Clean Water Act (CWA), Emergency Planning and Community Right-to-Know Act (EPCRA), Resource Conservation and Recovery Act (RCRA), and Clean Air Act (CAA). Through discussions with U.S. EPA Region 6 personnel, the principal investigation objectives were to determine compliance with:

- Water pollution control regulations under the Clean Water Act, focusing on National Pollutant Discharge Elimination System (NPDES) permit compliance, wastewater treatment operations, and sampling and flow measurement procedures

- Emergency Planning and Community Right-to-Know Act (EPCRA) §§ 302, 303, 304, 311, 312, and 313 requirements, and Comprehensive Environmental Response, Compensation, and Liability Act (CERCLA) § 103 requirements

- Hazardous waste management regulations under the Resource Conservation and Recovery Act (RCRA), focusing on identifying regulated process-generated wastes, compliance with the generator requirements (including 40 CFR Part 265 Subparts

EPA/FOIA2018-00004

AA, BB, and CC), and recordkeeping requirements (i.e., manifests, waste determinations, inspection records, and training), as appropriate

- Clean Air Act (CAA) requirements, including benzene waste operations, leak detection and repair (LDAR) program (previous inspection), PVC MACT/vinyl chloride NESHAP, NSPS for Polymer Manufacturing, hazardous organic NESHAP (HON) for pyrolysis gasoline units, ethylene glycol manufacturing, vinyl chloride manufacturing, and ethylene dichloride manufacturing, flaring events, and a preliminary evaluation of units potentially subject to New Source Review (NSR), New Source Performance Standard (NSPS), and Prevention of Significant Deterioration (PSD) requirements. [A list of authorization for expenditures (AFE)s will be provided.]

NEIC personnel also identified facility activities/conditions that, although not specifically regulated, could potentially impact the environment.

INVESTIGATION METHODS

To meet the investigation objectives, NEIC performed the following:

- A review of federal and state regulatory files and databases
- An on-site LDAR monitoring inspection of selected volatile organic compound (VOC)/organic hazardous air pollutant (OHAP) service components conducted November 17 through 20, 2003
- An on-site inspection of the facility conducted February 2 through 12, 2004 that involved:
  - Discussions with facility personnel including detailed process reviews
  - Observation and evaluation of facility operations
  - Facility records/document review
  - Sampling of process wastes to determine compliance with regulatory limits, including waste streams to assist in compliance determination with 40 CFR Part 61 Subpart FF and RCRA waste characterization sampling
- An exit conference between regulatory and facility personnel to discuss preliminary inspection findings.

NEIC personnel stressed that final determinations will be made in conjunction with regional and state personnel.

EPA/FOIA2018-00005

BACKGROUND

Formosa manufactures caustic soda, pyrolysis gas, natural fuel oil, ethylene glycol, ethylene dichloride (EDC), vinyl chloride monomer (VCM), polyvinyl chloride (PVC) suspension resin, ethylene, propylene, high density polyethylene (HDPE), linear low density polyethylene (LLDPE), and polypropylene (PP). Formosa began operations in 1981 with the start-up of the EDC, VCM, and PVC units. Formosa completed a major expansion in 1994 including the construction of the following units: olefins, LLDPE, HDPE, chlor-alkali, EDC, PP, and cogeneration. Formosa initiated a second expansion in 1998 that was completed in 2001/2002 including construction of a second olefins plant, HDPE plant, and PP plant, which doubled the production capacity of olefins, HDPE, and PP. Formosa has approximately 1,800 employees and is located in Calhoun County, Point Comfort, Texas on approximately 1,600 acres [Photograph 1].

Wastewater Discharges

Formosa is currently authorized under NPDES permit number TX00855701 to discharge remediated groundwater, treated process wastewater, storm water, utility wastewater, ion exchange membrane wastewater, hydrostatic test water, fire water, noncontact steam condensate, and noncontact wash waters through 14 total outfalls, including 2 internal outfalls to Lavaca Bay/Chocolate Bay, Cox Creek, Cox Creek Lake, Huisache Cove, and Cox Bay. The permit was issued on May 31, 2001 and expires on January 1, 2005.

Wastewater treatment at Formosa consists of two separate systems designated as the biological treatment facility and the physical treatment facility. The two systems are collectively designated as the CWTP. The biological treatment facility consists of degasification, equalization, precipitation, dissolved air floatation, aeration (bioreaction), clarification, fluid bed reaction, filtration, and sludge handling. Sludge handling consists of thickening, aerobic digestion, and dewatering prior to off-site landfill disposal. Excluding sludge handling, the biological treatment facility is divided into four areas designated as receiving, pretreatment, biological treatment, and tertiary treatment. The physical treatment facility consists of equalization, precipitation, clarification, and sludge handling. Sludge handling consists of thickening and dewatering prior to off-site landfill disposal. The physical treatment area has two trains, one for treatment of cooling tower blowdown, and the other for treatment of IEM unit and demineralization wastewater. Sanitary wastewater from the process area is treated onsite in a sanitary treatment package plant. The package plant consists of comminution, equalization, aeration, clarification, filtration, and chlorine disinfection. Storm water that does not come in contact with process equipment, designated as outside battery limits, is collected in ditches in the respective process units. Internal gates are located on the ditches at the perimeter of the process units. The internal gates are normally kept closed, and

EPA/FOIA2018-00006

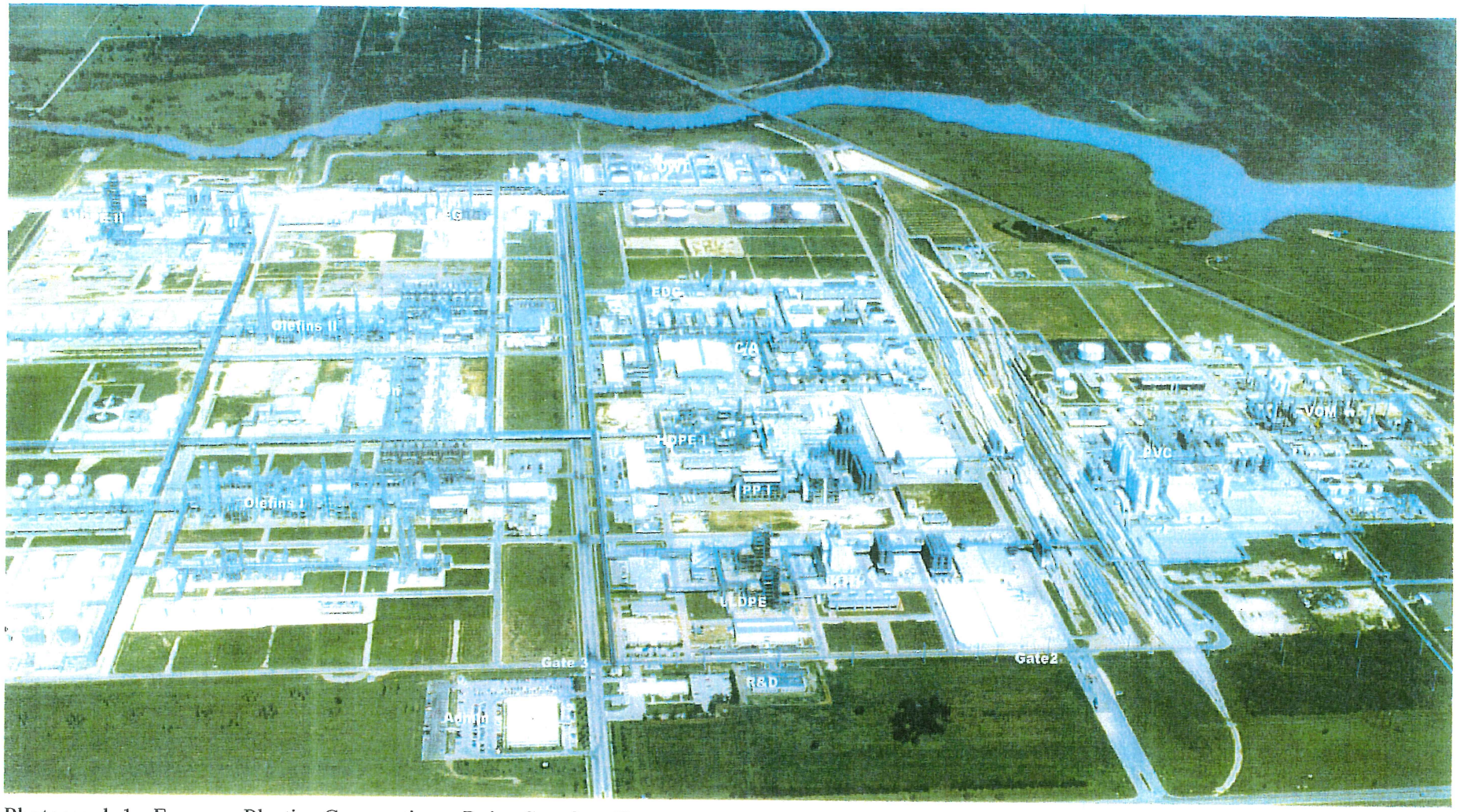

Photograph 1 - Formosa Plastics Corporation – Point Comfort, Texas

EPA/FOIA2018-00007

the general procedure is to only open the gates following confirmation that the storm water is not contaminated, based on sampling and analysis of the storm water. When the internal gates are opened, the storm water flows to the various permitted storm water outfalls located throughout the facility.

Emergency Planning and Community Right-to-Know Act (EPCRA)

Formosa has submitted Toxic Chemical Inventory Reporting Forms (Form R's and A's) for chemicals present in amounts above the threshold quantities. Formosa reported approximately 766,391 pounds (total) of 43 chemicals released from its operations during 2002. The following is a listing of the reported released/transferred chemicals from Formosa in 2000, 2001, and 2002.

- 1,1,1,2-tetrachloroethane
- 1,1,2,2-tetrachloroethane
- 1,1,2-trichloroethane
- 1,2,4-trimethylbenzene
- 1,2-dichloroethane
- 1,2-dichloroethylene
- 1,3-butadiene
- 4,4'-isopropylidenediphenol
- acetaldehyde
- ammonia
- benzene
- carbon tetrachloride
- chlorine
- chlorobenzene
- chloroethane
- chloroform
- chloromethane
- chloroprene
- chromium
- copper
- cumene
- cyclohexane
- dichlorodifluoromethane
- dichloromethane
- dicyclopentadiene
- dioxin and compounds
- ethyl benzene
- ethylene
- ethylene glycol
- ethylene oxide
- ethylidene dichloride
- hexachlorobenzene
- hydrochloric acid
- methanol
- n-hexane
- naphthalene
- propylene
- propylene oxide
- styrene
- tetrachloroethylene
- titanium tetrachloride
- toluene
- vinyl chloride
- xylene

Hazardous Waste Management

Formosa has the following three RCRA EPA ID numbers: Main plant TXT490011293 (Large Quantity Generator (LQG) – Treatment Storage and Disposal Facility (TSDF)), Shore Tank Farm TX0000888164 (Conditionally Exempt Small Quantity Generator (CESQG)), and Marine Terminal Facility TXD988088845 (Small quantity generator). Only the main plant (TXT490011293) was evaluated during the NEIC inspection.

EPA/FOIA2018-00008

The two most recent TCEQ compliance investigations of Formosa's main plant (EPA ID No. TXT490011293), an LQG, were conducted on November 6 and 8, 2001 and on February 2, 27, and March 6, 2003. The waste management units include two, less-than-90-day container storage areas (CSAs) for drums and seven, less-than-90-day CSAs for roll-off boxes. Due to a reclassification of their distillation bottoms, Formosa deactivated five hazardous waste tanks used to manage distillation bottoms (K019, K020) in April 2001. Two tanks have been disassembled, two tanks are pending closure, and one tank has been closed according to TRRP rules. Documentation has been submitted and is pending TCEQ approval. A used oil collection center has been obtained for authorization to temporarily store used oil that has been generated at the plant and for used oil generated by Formosa's employees at their private residences. The registration is for used oil only, no filters are collected at the site. No concerns were noted during the February/March 2003 used oil collection center inspection. Violations cited during the inspections included failure to notify the executive director for the generation and disposition of wastewater streams at the facility, container labeling issues, and failure to list their hazardous and/or non-hazardous wastewater on the Notice of Registration (NOR). There are six unauthorized surface impoundments on-site, addressed under the 3008(a) and 3008(h) orders issued by EPA in February 1991. The status of the impoundments is 'pending closure' in accordance with EPA's Corrective Action Strategy Pilot Project.

Air Emissions

Formosa is subject to several requirements under the Clean Air Act. Because Formosa is considered a major source of several air pollutants, the federal and state requirements have been compiled into several Title V permits pending or issued by TCEQ. Emission sources at the plant include, but are not limited to, reactors, dryers, heaters, boilers, and incinerators. NEIC focused on examining Formosa's compliance with the following regulations:

- 40 CFR Part 60 (Standards of Performance for New Stationary Sources or NSPS) Subpart A – General Provisions (specifically pertaining to excess emissions and good pollution control practices)
- 40 CFR Part 60 Subpart VV – Standards of Performance for Equipment Leaks of VOC in the Synthetic Organic Chemicals Manufacturing Industry
- 40 CFR Part 61 (National Emission Standards for Hazardous Air Pollutants or NESHAP) Subpart F – National Emission Standard for Vinyl Chloride
- 40 CFR Part 61 Subpart V – National Emission Standard for Equipment Leaks
- 40 CFR Part 61 Subpart FF – National Emission Standard for Benzene Waste Operations
- 40 CFR Part 63 Subpart F – National Emission Standards for Organic Hazardous Air Pollutants From the Synthetic Organic Chemical Manufacturing Industry (or HON, specifically pertaining to startup, shutdowns, and malfunctions)
- 40 CFR Part 63 Subpart H, National Emission Standards for Organic Hazardous Air Pollutants for Equipment Leaks

EPA/FOIA2018-00009

SUMMARY OF FINDINGS

The following section summarizes areas of noncompliance and concern identified during the inspection. Areas of concern are inspection observations of potential problems that could result in environmental harm, noncompliance with permit or regulatory requirements, or are associated with pollution prevention issues.

CLEAN WATER ACT

Areas of Noncompliance

1. **40 CFR § 136.3, Table II, as referenced by NPDES Permit TX0085570, Monitoring and Reporting Requirements, 2. Test Procedures [30 TAC § 319.11(b)]** - *Sample containers, holding times, and preservation methods shall meet requirements specified in 40 CFR Part 136.* 7(B)

   At the time of the NEIC inspection, Formosa was not preserving NPDES permit compliance samples at 4 °C at Formosa's environmental laboratory, prior to sample analysis. Most sample parameters to be analyzed under Formosa's NPDES permit are required to be preserved by cooling at 4 °C. 7(B)

2. **NPDES Permit TX0085570, Effluent Limitations and Monitoring Requirements** – *The permittee is authorized to discharge wastewater subject to the effluent limitations and monitoring requirements specified in the NPDES Permit.* 7(B)

   Formosa exceeded permitted effluent limitations on 14 occasions from January 2001 through December 2003, as documented on Discharge Monitoring Reports (DMRs) reviewed for that time period. 7(B)

3. **NPDES Permit TX0085570, Effluent Limitations and Monitoring Requirements** – *The permittee is authorized to discharge wastewater subject to the effluent limitations and monitoring requirements specified in the NPDES Permit.* 7(B)

   Formosa failed to collect the required four sample aliquots for the composite sample for volatile parameters at outfall 001 on April 12, 2001. Formosa failed to sample and analyze for 1,2-dichloroethane and total purgeable hydrocarbons at outfall 003 during a storm water discharge on November 17, 2001. 7(B)

4. 40 CFR § 122.21(g)(2) – *Existing dischargers applying for an NPDES permit shall provide a line drawing of the water flow through the facility with a water balance, showing operations contributing wastewater to the effluent and treatment units.* 7(B)

   40 CFR § 122.21(g)(3) - *Existing dischargers applying for an NPDES permit shall provide a narrative identification of each type of process, operation, or production area which contributes wastewater to the effluent for each outfall.* 7(B)

EPA/FOIA2018-00010

[NPDES Permit TX0085570, Permit Conditions, 1. General a. – *When the permittee becomes aware that it failed to submit any relevant facts in a permit application, or submitted incorrect information in an application or in any report to the Executive Director, it shall promptly submit such facts or information.*] 7(B)

[Certain line drawings and narratives provided by Formosa in the EPA and TNRCC permit applications submitted on March 12, 1998 and January 14, 1998, respectively, were inaccurate. Examples of line drawing and narrative deficiencies include inaccurate representation of the destination and treatment of certain wastewater stream flows.] 7(B)

Areas of Concern

A. [Formosa's procedure for measuring the depth of Lavaca Bay may not be representative of the actual bay depth at the vicinity of Formosa's discharge and, therefore, may not be meeting NPDES permit requirements. Formosa discharges wastewater via outfall 001 into Lavaca Bay through a diffuser located 8,400 feet from the shore. Formosa is required to cease wastewater discharge at times when the depth of Lavaca Bay at Channel Marker 22 (near the diffuser) is less than 1 foot in depth. Formosa is required to install a staff gauge or alternative equipment "in the vicinity of Channel Marker 22" and read it daily to comply with the requirement. Formosa was reading the bay depth near the shoreline at a dock and accounting for the supposedly known differential between the depth at the dock and the depth at Channel Marker 22.] 7(B)

B. [Permit application information regarding discharges of chloroform may have resulted in the omission of chloroform monitoring requirements for outfall 001 and/or outfall 201. Chloroform effluent limitations and monitoring requirements are currently included in Formosa's NPDES permit for internal outfall 101. Internal outfall 101 regulates discharges of treated wastewater from organic chemical production processes which are covered under the Organic Chemicals, Plastics, and Synthetic Fibers (OCPSF) effluent guidelines. Formosa's permit also includes internal outfall 201 for discharges of wastewater from inorganic chemical production processes and cooling tower blowdown. The combined effluent from outfall 101 and 201 is monitored at outfall 001, which is the total plant effluent discharge. There are no effluent limitations or monitoring requirements for chloroform at outfall 201 or 001. Formosa provided information to the EPA in their 1998 permit application stating that the wastewater contributing to outfall 201 is a source of chloroform. This information was not provided to TNRCC in a separate permit application submitted in 1998. TNRCC issued the sole permit that is currently in effect. By including monitoring requirements for chloroform only at outfall 101, potential discharges of chloroform through outfall 201, and eventually 001, will not be detected.] 7(B)

EMERGENCY PLANNING AND COMMUNITY RIGHT-TO-KNOW ACT

Areas of Noncompliance

1. [CERCLA § 103 [40 CFR § 302.6(a)] - *Any person in charge of a vessel or an offshore or an onshore facility shall, as soon as he has knowledge of any release... ...in a quantity equal*] 7(B)

[*to or exceeding the reportable quantity determined by this part in any 24-hour period, immediately notify the National Response Center.*] 7(B)

[Formosa's notification to the NRC for 72 reportable releases was not made immediately following the release.] 7(B)

[Formosa did not report 250 reportable releases of vinyl chloride to the NRC.] 7(B)

2. [**EPCRA § 304(b) [40 CFR § 355.40(b)(1)]** - *The owner or operator of a facility subject to this section shall immediately notify the LEPC and SERC of the release of a reportable quantity of any extremely hazardous substance or CERCLA hazardous substance.*] 7(B)

[Formosa did not immediately notify the LEPC and SERC of 70 reportable releases.] 7(B)

[Formosa did not report 250 reportable releases of vinyl chloride to the LEPC and SERC.]

3. [**EPCRA § 304(c) [40 CFR § 355.40(b)(3)]** – *As soon as practicable after a release which requires notice under (b)(1) of this section, such owner or operator shall provide a written follow-up emergency notice setting forth and updating the information required under paragraph (b)(2) of this section....*] 7(B)

[Formosa did not provide written follow-up notification for two reportable releases.] 7(B)

4. [**EPCRA § 311 [40 CFR § 370.21(c)(2)]** – *After October 17, 1987, the owner or operator of a facility subject to this section shall submit an MSDS for a hazardous chemical . . . or a list of hazardous chemicals . . .within three months after the owner or operator is first required to prepare or have available the MSDS or after a hazardous chemical requiring an MSDS becomes present in an amount exceeding the threshold established in § 370.20(b).*] 7(B)

[MSDSs or an alternative reporting list for hazardous chemicals brought onsite that exceed the threshold in 40 CFR Section 370.20(b), are not submitted to the local fire department, SERC, and LEPC.] 7(B)

5. [**EPCRA § 313 [40 CFR § 372.30(a)]** - *For each toxic chemical known by the owner or operator to be manufactured (including imported), processed, or otherwise used in excess of an applicable threshold quantity... ...for a calendar year... ...the owner or operator must submit to EPA and to the State a completed EPA Form R in accordance with this part.*] 7(B)

[Anthracene was not reported in 2000 although the threshold was exceeded. Additionally, NEIC could not locate threshold calculations for anthracene for 2001 and 2002.] 7(B)

[The following table outlines the data quality errors found in Formosa's toxic release reporting. Positive changes indicate that a release amount was underreported. Negative changes indicate that a release amount was overreported. Dashes within the table indicate that no areas of noncompliance were found.] 7(B)

DATA QUALITY ERRORS FOUND IN FORMOSA'S TOXIC RELEASE REPORTING

Chemical/Release Medium	2000 Amount Reported (lbs)	2000 NEIC Amount (lbs)	2000 Amount in Error (lbs)	2000 Percent Difference	2001 Amount Reported (lbs)	2001 NEIC Amount (lbs)	2001 Amount in Error (lbs)	2001 Percent Difference	2002 Amount Reported (lbs)	2002 NEIC Amount (lbs)	2002 Amount in Error (lbs)	2002 Percent Difference
1,1,2,2-Tetrachloroethane/Stack air	0	13	13	∞	-	-	-	-	-	-	-	-
1,1,2-Trichloroethane/Stack air	0	155	155	∞	-	-	-	-	NA	46	46	∞
1,3 Butadiene/Stack air	2,301	5,293	2,992	130	-	-	-	-	-	-	-	-
1,3-Butadiene/Fug. Air	-	-	-	-	575	2,075	1,500	261	2,154	1,445	-709	-33
1,2,4-Trimethylbenzene/Stack Air	-	-	-	-	-	-	-	-	3,314	3,551	237	7
1,2,4-Trimethylbenzene/Fug. Air	1,167	2,613	1,446	124	-	-	-	-	52	185	133	254
1,2-Dichloroethane (EDC)/Stack Air					1,710	2,473	763	45	4,157	14,737	10,580	254
1,2-Dichloroethane (EDC)/Fug. Air	8,314	9,405	1,091	13	3,404	4,102	698	21	14,635	17,019	2,384	16
Acetaldehyde/Fug. Air	-	-	-	-	-	-	-	-	2,099	4,220	2,121	101
Benzene/Stack Air	-	-	-	-	-	-	-	-	13,127	10,789	-2,338	-18
Benzene/Fug. Air	847	1,696	849	100	2,092	2,355	263	13	3,349	5,098	1,749	52
Chlorine/Fug. Air	653	658	5	0.77	-	-	-	-	-	-	-	-
Chlorobenzene/Stack air	-	-	-	-	-	-	-	-	NA	42	42	∞
Cyclohexane/Fug. Air	72	75	3	4	-	-	-	-	164	122	-42	-26
Dichlorodifluoromethane/Stack air	-	-	-	-	-	-	-	-	0	72	72	∞
Dichlorodifluoromethane/Fug. air	-	-	-	-	-	-	-	-	13,727	13,000	-727	-5
Dichloromethane (Methylene Chloride)/ Fug. air	-	-	-	-	-	-	-	-	221	5,049	4,828	2,185
Dicyclopentadiene/Stack Air	-	-	-	-	-	-	-	-	0.32	5	5	1,444
Dicyclopentadiene/Fug. Air	4	0	-4	-100	-	-	-	-	-	-	-	-
Ethylbenzene/Stack Air	-	-	-	-	-	-	-	-	2,481	2,059	-422	-17
Ethylbenzene/Fug. Air	1,569	4,760	3,191	203	-	-	-	-	-	-	-	-
Ethylene/ Fug. Air	10,973	55,439	44,466	405	13,853	114,645	100,792	728	23,644	23,924	280	1
Ethylene glycol/Stack Air	-	-	-	-	-	-	-	-	1,686	1,086	-600	-36
Ethylene glycol/Fug. Air	4,706	5,236	530	11	-	-	-	-	1,998	1,628	-370	-19
Ethylene oxide/Fug. Air	67	89	22	33	99	114	15	15	-	-	-	-
n-hexane/Stack Air	-	-	-	-	-	-	-	-	28,410	33,054	4,644	16
n-hexane/Fug. Air	3,179	22,284	19,105	601	4,256	5,070	814	19	5,222	8,403	3,181	61
Hydrochloric acid/Fug. Air	703	1,671	968	138	-	-	-	-	1,134	1,143	9	1
Naphthalene/Stack air	-	-	-	-	-	-	-	-	5,268	4,818	-450	-9
Naphthalene/Fug. air	-	-	-	-	-	-	-	-	320	1,160	840	263
Propylene/Stack Air	-	-	-	-	-	-	-	-	52,398	46,807	-5,591	-11
Propylene/Fug. Air	10,732	21,562	10,830	101	12,412	41,162	28,750	232	20,772	22,783	2,011	10
Propylene Oxide/Fug. Air	-	-	-	-	-	-	-	-	NA	280	280	∞
Styrene/Fug. Air	71	103	32	45	-	-	-	-	517	937	420	81

EPA/FOIA2018-00013

7(B)

Chemical/Release Medium	2000 Amount Reported (lbs)	2000 NEIC Amount (lbs)	2000 Amount in Error (lbs)	2000 Percent Difference	2001 Amount Reported (lbs)	2001 NEIC Amount (lbs)	2001 Amount in Error (lbs)	2001 Percent Difference	2002 Amount Reported (lbs)	2002 NEIC Amount (lbs)	2002 Amount in Error (lbs)	2002 Percent Difference
Tetrachloroethylene/Stack Air	-	-	-	-	-	-	-	-	NA	42	42	∞
Tetrachloroethylene/Fug. Air	38	134	96	253	-	-	-	-	-	-	-	-
Titanium Tetrachloride/Fug. air	2	0	-2	-100	-	-	-	-	-	-	-	-
Toluene/Stack Air	-	-	-	-	-	-	-	-	5,629	2,573	-3,055	-54
Toluene/Fug. Air	1,291	3,976	2,685	208	-	-	-	-	2,072	2,687	615	30
Vinyl Chloride/Stack Air	-	-	-	-	-	-	-	-	5,921	6,512	591	10
Vinyl Chloride/Fug. Air	3,304	11,742	8,438	255	4,206	7,250	3,044	72	2,858	3,051	193	7
Xylene/Stack air	-	-	-	-	3,902	3,937	35	1	8,140	6,934	-1,206	-15
Xylene/Fug. Air	4,167	11,801	7,634	183	-	-	-	-	1,399	1,466	67	5

EPA/FOIA2018-00014

Areas of Concern

A. [Formosa may have failed to report VCM releases above the reportable quantity for 2001 and 2002. NEIC believes the ambient data collected in 2003 to be representative of the 2000 through 2002 timeframe, despite events such as Hurricane Claudette in July 2003, because (1) no VCM release reports were submitted by the company for the hurricane period; (2) the number of leaks (greater than 1 ppm) recorded per month increased after the hurricane, but then decreased and increased to a new maximum (showing the hurricane was not the source of the increasing leak trend); and (3) general statements from VCM plant personnel about emergency capacity present in the VCM process to avert releases.] 7(B)

B. [Formosa's 2000 and 2001 background documentation does not contain threshold calculations for chloromethane. Based on production in the VCM plant in 2000 and 2001, it appears the amount of chloromethane manufactured in the VCM plant would have exceeded the 25,000 pound threshold and, therefore, Form Rs should have been submitted.] 7(B)

C. [Threshold determinations for persistent bioaccumulative toxic (PBT) chemicals such as mercury, lead, and polycyclic aromatic compounds (PACs) should be reviewed by Formosa. Based on the background information provided by Formosa, the PBT chemicals were not thoroughly evaluated at the reduced thresholds beginning in 2000. Glycol ethers and sulfuric acid thresholds should also be evaluated to confirm that these chemicals should not be reported since both of these chemicals are used at Formosa. Facilities similar to Formosa have reported for these chemicals.] 7(B)

D. [Formosa appears to have underreported fugitive emissions of vinyl chloride monomer from the VCM plant by roughly 9,000 lbs. annually from 2000 through 2002. Formosa most likely underreported fugitive emissions of vinyl chloride monomer from the PVC plant also because they have ambient air monitors present and are not including the information in their EPCRA vinyl chloride fugitive emissions calculations.] 7(B)

E. [Formosa reported more one-time chemical releases in Section 8.8 of the 2000 and 2001 Form Rs than NEIC typically sees reported on Form Rs. Formosa reported 19 chemicals in Section 8.8 for reporting year 2000 and 8 chemicals for reporting year 2001. Section 8.8 should only include the quantity of toxic chemical released to the environment as a result of remedial actions, catastrophic events, or one-time events not associated with production processes. The toxic chemical releases reported in Section 8.8 for 2000, 2001, and 2002 should not have been included in Section 8.8 because the releases do not meet the definition of a one-time release and are typically production related releases. If the releases reported in Section 8.8 do meet the "one-time" release definition, these releases must also be included in Section 5 of the Form R, as required. Formosa should submit corrected Form Rs for reporting years 2000, 2001, and 2002. The toxic chemicals should be removed from Section 8.8 reporting (unless they meet the definition above) and accurately reported in Section 5 under the appropriate release category.] 7(B)

Areas of Noncompliance

1. **30 TAC § 335.62 [40 CFR § 261.3(c)(2)] and the April 5, 1996 TNRCC letter regarding reclassification of wastewater treatment system sludge**– ... *any solid waste generated from the treatment, storage, or disposal of a hazardous waste, including any sludge, spill residue, ash, emission control dust, or leachate, is a hazardous waste.* 7(B)

   Formosa is not meeting the conditions required for their biological treatment sludge delisting. The wastewater treatment system receives contaminated groundwater meeting the listing of hazardous waste numbers U077, K019, and K020. On April 5, 1996, the TNRCC granted a delisting for the biological treatment sludge, with the condition that the groundwater must be pretreated prior to entering the wastewater treatment system to risk based levels in TNRCC Risk Reduction Rules and also the universal treatment standards in 40 CFR Part 268. Data provided by Formosa showed that out of 7 days, there were four exceedances of the universal treatment standard for EDC in U077, K019, and K020 wastewaters. Furthermore, additional hazardous constituents have treatment standards that must be met for K019 and K020 wastewaters. Formosa did not provide any analysis results for these constituents in their treated groundwater. 7(B)

2. **30 TAC § 335.62 [40 CFR § 262.11]** – *A person who generates a solid waste, as defined in 40 CFR 261.2, must determine if that waste is a hazardous waste ...* 7(B)

   Formosa failed to make hazardous waste determinations for the following solid wastes:

   (a) Aerosol cans – Aerosol cans used in the maintenance shop are punctured in the open and discarded in the general trash without any determination that the can is empty or whether it contained materials classified as hazardous waste. Discarded aerosol cans typically contain materials classified as ignitable or reactive. 7(B)
   (b) Bead blasting residue – In the maintenance shop, bead blasting units containing glass beads and steel shot were observed. Facility personnel indicated that the spent glass beads were discarded in the general trash and the steel shot was put with the scrap metal. No analytical data was provided for the residue.

3. **30 TAC § 335.69(d)(1) [40 CFR § 265.173(a), as referenced by 262.34(c)(1)(i)]** – *A container holding hazardous waste must always be closed during storage, except when it is necessary to add or remove waste.* 7(B)

   Four containers of hazardous waste at satellite areas in the main laboratory were not closed during accumulation. 7(B)

4. **30 TAC § 335.69(d)(2) [40 CFR § 262.34(c)(1)(ii)]** – *A generator may accumulate as much as 55 gallons of hazardous waste ... provided he marks his containers either with the words "Hazardous Waste" or with other words that identify the contents of the containers.* 7(B)

   One container of hazardous waste at a satellite area in the main laboratory was not marked with the words "Hazardous Waste" or other words identifying the contents. 7(B)

EPA/FOIA2018-00016

5. [**30 TAC § 335.69(e) [40 CFR § 262.34(c)(2)]** – *A generator who accumulates hazardous waste in excess of 55 gallons at or near any point of generation ... must mark the container holding the excess accumulation of hazardous waste with the date the excess amount began accumulating.*] 7(B)

[Three drums were being stored at the same satellite area in the EDC plant, containing a total of over 55 gallons of hazardous waste. None of the drums were marked with an accumulation start date.] 7(B)

6. [**30 TAC § 335.69(a)(2) [40 CFR § 262.34(a)(2)]** – *A generator may accumulate hazardous waste on-site for 90 days or less ... provided that the date upon which each period of accumulation begins is clearly marked and visible for inspection on each container.*] 7(B)

[The accumulation start date was not marked on three, 55-gallon drums of hazardous waste generated from the main laboratory. The drums were accumulated in an outside shed, which Formosa had designated as a satellite accumulation point. These Wastestreams had initially accumulated in small containers located in the hoods in the separate labs inside the building. This practice would cause the drums in the outside shed to be classified as a less-than-90-day accumulation point, requiring the drums to be dated.] 7(B)

Areas of Concern

A. [Wastewater from the C06B pit was observed overflowing onto the ground, potentially causing vinyl chloride to be discharged to the environment. A grassy area was present along the north side of the above-ground pit. During the NEIC inspection, the C06B pit was full of wastewater without any visible freeboard, and some wastewater was flowing onto the grassy area. Work plans under the 3008(h) order should be reviewed to ensure this area is being addressed as a potential solid waste management unit.] 7(B)

B. [Formosa occasionally uses wastewater from the CPI separator in the Olefins I unit to feed their cooling towers, which may result in mismanagement of a hazardous waste. Formosa has determined that petroleum contaminated debris that is removed from the CPI separator in the Olefins I unit meets the definition of a K170 listed hazardous waste, which is clarified slurry oil tank sediment and/or in-line filter/separation solids from petroleum refining operations. According to the process description provided by Formosa, the only contributing waste stream to the CPI separator is storm water from the unit. The wastewater from the CPI is sometimes used in the cooling towers. If the K170 hazardous waste listing determination for the CPI sludge is correct, then any sludge removed from the cooling tower would also meet the K170 listing. Cooling tower packing sludge is currently classified as a non-hazardous waste by Formosa.] 7(B)

C. [Formosa should be evaluated for inadvertently generated PCBs under the Toxic Substances Control Act (TSCA). During the NEIC inspection, samples of the facility's distillation bottoms were collected and analyzed for PCBs for RCRA waste classification purposes. PCBs were not detected at levels high enough to be a RCRA concern, but monochlorinated biphenyls were present in the EDC distillation bottoms that may trigger TSCA regulation. Formosa previously analyzed the material for PCBs, but used a detection limit higher than the regulatory limit in 40 CFR § 761.185.] 7(B)

D. [Formosa is currently undergoing corrective action activities under a RCRA 3008(h) consent order. All the solid waste management units (SWMUs) included in the RCRA Facility Investigation are located in the southern part of the facility (the VCM and PVC plants and the old wastewater treatment plant). The corrective action order requires Formosa to determine the nature and extent of releases of hazardous waste or constituents at regulated units and SWMUs at the facility. According to 40 CFR § 260.10, for the purpose of implementing corrective action under 3008(h), "facility" means all contiguous property under the control of the owner or operator. The RFI should include the entire site. Some additional potential SWMUs observed during the inspection include: EDC release from the explosion of tank DT-401 on December 4, 1998; spray gun painting and sandblasting areas at the contractor paint yard; used oil tank area outside the central maintenance shop where an oil sheen was observed; and welding operations and other activities out at contractor's row. Formosa has completed some investigation and corrective action activities for the 1998 EDC release, but it has not been under the provisions of the 3008(h) order.] 7(B)

CLEAN AIR ACT

Areas of Noncompliance

1. [**40 CFR § 60.11(d), 40 CFR § 61.12(c), 40 CFR § 63.102(a)(4)** - *Maintain plant processes and pollution control equipment in a "manner consistent with good air pollution control practice for minimizing emissions..."; "...minimize emissions to the extent practical..."*] 7(B)

   [Considering each quarter as an instance in which the cause of emission was determined and, therefore, "known" by the facility, Formosa reported recurring causes of emissions over 200 times (for over 2,600 hours of excess emission events) in the 11 quarters evaluated by NEIC. Because the causes of these excess emissions were not "infrequent" and could likely have been "reasonably prevent[ed]," Formosa likely failed to maintain plant processes and pollution control equipment in a "manner consistent with good air pollution control practice for minimizing emissions," or failed to "...minimize emissions to the extent practical," as required.] 7(B)

2. [**40 CFR § 60.482-7(c)(1), 40 CFR § 61.242-7(c)(1)** – *[As opposed to monthly monitoring,] any valve for which a leak is not detected for 2 successive months may be monitored the first month of every quarter, beginning with the next quarter, until a leak is detected...*] 7(B)

   [Based on facility monitoring records from January 2000 through November 2003, Formosa failed to monitor approximately 5,670 valves in two process units when required. Formosa monitored valves in the PPU unit 1 month late in August/ September 2001, and monitored valves 1 month late in the HDPE II unit during October/November 2002.] 7(B)

3. [**40 § 60.482-7(c)(2)** – *If a leak is detected, the valve shall be monitored monthly until a leak is not detected for two successive months...*] 7(B)

   [Based on monitoring records maintained by the facility, Formosa failed to monitor light-liquid or gaseous service valves in NSPS Subpart VV units, on a monthly basis for two successive months after detecting a leak, on 60 occasions from 1999 through August 2003.] 7(B)

EPA/FOIA2018-00018

4. [40 CFR § 60.482-7(d)(2), 40 CFR § 61.242-7(d)(2), 40 CFR § 63.168(f)(2) – *A first attempt at repair shall be made no later than five calendar days after each leak is detected...*] 7(B)

[Based on information in the facility LDAR recordkeeping database, Formosa failed to perform first repair attempts to 52 valves within the 5-day required timeframe, between 1999 and November 2003.] 7(B)

5. [40 CFR § 60.482-7(d)(1), 40 CFR § 61.242-7(d)(1), 40 CFR § 63.168(f)(1) - *When a leak is detected, it shall be repaired as soon as practicable, but no later than 15 calendar days after the leak is detected, unless emissions would be greater by fixing the component or a shutdown is required to fix the component...*] 7(B)

[Formosa failed to perform final repairs to 68 valves, or to place the components on the delay of repair list, within 15 days of identification of the leak between 1999 and October 2003.] 7(B)

6. [40 CFR § 63.168(e)(2) - *For use in determining monitoring frequency...the percent leaking valves shall be calculated as a rolling average of two consecutive monitoring periods for monthly, quarterly, or semiannual monitoring programs...*] 7(B)

[Based on reports reviewed from January 2001 through July 2003, Formosa reported only the valve leak percentage for the current monitoring period, thereby failing to report the percentage as a two-period rolling average, as required.] 7(B)

7. [40 CFR § 60.482-6 – *Each open-ended valve or line shall be equipped with a cap, blind flange, plug, or a second valve...*] 7(B)

[Formosa failed to close one open-ended line in the HDPE unit with a valve, plug, cap, or other device, as required.] 7(B)

8. [40 CFR § 60.482-7(a) - *Each valve shall be monitored monthly to detect leaks...*
TCEQ 28MID - *Accessible valves shall be monitored by leak-checking for fugitive emissions at least quarterly...*] 7(B)

[NEIC identified 66 valves total in the LLDPE and HDPE units which likely had not been monitored since third quarter 2000 when the units appear to have started operations. According to facility estimates, provided verbally to NEIC during the multimedia inspection and subsequent site visits, Formosa failed to include over 500 valves in the program.] 7(B)

9. [40 CFR § 60.482-7(a), 40 CFR § 61.242-7, 40 CFR § 63.168(b)(1) – *Monitor all valves according to EPA Reference Method 21 (located at 40 CFR Part 60 Appendix A)...*] 7(B)

[Agency personnel found higher leak rates than Formosa in each of the seven process units where monitoring was conducted. Valve leak rates in excess of 2 percent were identified in four out of the seven units monitored, and the leak rate in one unit, LLDPE, was found to exceed 4 percent. In the MT area, Agency personnel identified four leaking valves, whereas Formosa had identified zero valves leaking when monitored in June 2003. As a ratio of leak percentages, Agency personnel found over 12 times the Formosa rate in the MT unit (assuming Formosa had found at least one leak, in order to prevent an infinite result in the ratio). In the VCM unit, Agency personnel identified the same number of leaks as Formosa,] 7(B)

EPA/FOIA2018-00019

yet monitored only 11 percent of the valve population in the unit (yielding an Agency personnel-to-Formosa leak percentage ratio of 9.5 to 1). Overall, for the seven units in which comparative monitoring was performed, Agency personnel determined a leak rate of 2.18 percent, compared to 0.47 percent for Formosa—a difference (ratio) of 4.6 times. The large discrepancy in valve leak percentages between Agency personnel and Formosa indicates Formosa failed to find the maximum leak during monitoring, as required by 40 CFR Part 60 Appendix A, Reference Method 21. 7(B)

During the multimedia inspection (February 2 through 12, 2004), NEIC re-visited leaks detected in three process units (Olefins 1, HDPE 1, and LLDPE) during the November 2003 LDAR audit. Out of 49 valves re-visited, NEIC and Formosa representatives identified 15 leaking above the 500-ppm threshold. Formosa personnel indicated many of the valves had been re-tested by the monitoring contractor (EAI) only days before. NEIC inquired about recent monthly/quarterly monitoring results collected for the valves, and learned although EAI tested the components two to three times between the NEIC inspections (approximately once per month), no leaks had been determined. The inability of facility monitoring contractors to detect leaks unless EPA inspectors are present further corroborates NEIC's finding that Formosa failed to follow the monitoring method required. NEIC understands several EAI employees responsible for LDAR work at Formosa are no longer working for the company. 7(B)

10. **40 CFR § 61.357(d)(1)** – *Within 90 days after January 7, 1993, ... or by the date of initial startup for a new source with an initial startup after the effective date, a certification that the equipment necessary to comply with these standards has been installed and that the required initial inspections or tests have been carried out in accordance with this subpart.* 7(B)

Copies of these certifications for the installation of necessary control equipment and initial monitoring inspections could be located. Startup of Olefins II in the second quarter of 2002 caused the TAB value to exceed 10 Mg/yr. necessitating the installation and operation of various control equipment. Olefins II operated briefly in the summer of 2001 during a failed startup attempt. The required certifications around either of these startup time frames could not be located. 7(B)

11. **40 CFR § 61.355(b) and 40 CFR § 61.342(a)(4)** – **61.355(b)** *For purposes of the calculation required in paragraph (a) of this section, an owner or operator shall determine the annual waste quantity at the point of waste generation, unless otherwise provided ... .* **61.342(a)(4)** *The total annual benzene quantity is determined upon the quantity of benzene in the waste before any waste treatment occurs to remove the benzene except as specified in ... .* 7(B)

The annual waste benzene quantity associated with the spent caustic stream was not made at the point of waste generation. Formosa samples the spent caustic waste stream at a location other than the point of waste generation (column 2301). Formosa samples a location after the caustic skim separator and spent caustic degassing drum. Both the caustic skim separator and spent caustic degassing drum have the potential to remove benzene prior to Formosa sampling. 7(B)

12. **40 CFR § 61.356(e)(2)** *An owner or operator using a treatment process or wastewater treatment system unit in accordance with Section 61.348 of this subpart shall maintain the* 7(B)

following records. The documentation shall be retained for the life of the unit. (2) If engineering calculations are used to determine treatment process or wastewater treatment system unit performance, then the owner or operator shall maintain the complete design analysis for the unit. The design analysis shall include for example the following information: Design specifications, drawings schematics,... and other documentation necessary to demonstrate the unit performance. 7(B)

Formosa could not provide design information to show that the OL I and OL II Zimpro oxidation units and that the OL I and OL II steam strippers could operate throughout the expected range of flow and benzene concentrations. 7(B)

13. **40 CFR § 61.356(e)(1)** - *An owner or operator using ... shall maintain the following records. The documentation shall be retained for the life of the unit. (1) A statement signed and dated by the owner or operator certifying that the unit is designed to operate at the documented performance level when the waste stream entering the unit is at the highest waste stream flow rate and benzene content expected to occur.* 7(B)

Formosa could not provide a copy of a signed and dated statement certifying that the OL I or OL II Zimpro oxidation units or the OL I and OL II steam strippers were designed to operate at highest flow or benzene concentration expected to occur. 7(B)

14. **40 CFR § 61.356(h)** - *An owner or operator shall maintain a record for each test of no detectable emissions required by.... . The record shall include the following information: date the test is performed, background level measured during the test, the maximum concentration indicated by the instrument reading for each potential emission point.* 7(B)

The Formosa annual fugitive monitoring logs do not list the required information (date the test is performed, background level measured during the test, the maximum concentration indicated by the instrument reading) for each potential emission point. The required information is grouped together in a single category of equipment such as "Misc. Drains/Drain Hubs, etc.- Zimpro process" rather than providing information for each piece of equipment. This missing information makes it impossible to determine if all equipment was properly monitored. 7(B)

Areas of Concern

A. Formosa's Leak Detection and Elimination Program appears largely ineffective in reducing vinyl chloride emissions. NEIC reviewed logsheets from field walk-throughs conducted during the evaluation period and identified only 3,558 instances (out of ~100,000 leaks) in which operators were able to determine a possible leak source. Based on Formosa's information, operators were unsuccessful at locating leaks 96.5 percent of the time, even when using portable analyzers. NEIC identified over 275 instances in which operators failed to locate leaks when ambient concentrations greater than 20 ppm VCM were detected. 7(B)

B. If the facility's VCM Leak Detection and Elimination Program was approved, Formosa may be in noncompliance with the vinyl chloride NESHAP by failing to follow its program. The program defines a leak as any reading of 1 ppm VCM or greater. During the on-site inspection, NEIC observed software settings which denoted a leak (alarmed) only when two consecutive readings (separated by 20 to 30 minutes), equal to or greater than 1 ppm VCM 7(B)

from a sample location, were recorded. Although the vinyl chloride NESHAP does not explicitly state a failure to follow the program is a non-compliance event, it does state under 40 CFR § 61.65(b)(8)(i)(B and C) that approval of the program will be granted if (1) it contains a definition of leak which is acceptable when compared with the background concentrations of vinyl chloride in the areas of the plant to be monitored by the vinyl chloride monitoring system, and (2) it contains an acceptable plan of action to be taken when a leak is detected. NEIC could not confirm if Formosa's program was approved by TCEQ or US EPA by the time this report was completed. 7(B)

C. Although the facility VCM Leak Detection and Elimination Program may have been approved, Formosa's use of a 10 ppm calibration gas may not meet Vinyl Chloride NESHAP requirements. Under 40 CFR § 61.65(b)(8)(i)(D), Formosa's VCM Leak Detection and Elimination Program was only to be approved if it provided for "...an acceptable calibration and maintenance schedule for the vinyl chloride monitoring system..." For the VCM monitoring system, "...a daily span check is to be conducted with a concentration of vinyl chloride equal to the concentration defined as a leak..." Formosa uses a 10 ppm VCM gas to perform daily calibrations, instead of a gas equal to the 1 ppm VCM leak definition described in the program. Information presented in the program description sent to TCEQ indicates the 10 ppm gas would be used. 7(B)

D. NEIC believes that if evaluated, Formosa's ambient monitoring data for the PVC unit may reveal similar underreporting of fugitive VCM emissions, as determined for the VCM process unit. Similar to the VCM unit, Formosa also performs ambient VCM monitoring in the PVC unit. Although monitoring data for the unit was not analyzed by NEIC, it is believed Formosa uses the data primarily for employee safety/leak identification purposes—similar to the VCM unit—and not for quantification of VCM emissions to the atmosphere. Based on a brief review of PVC unit logsheets, operators are much more successful at locating leak sources in the PVC plant than in the VCM plant. It appears, however, that a large number of VCM readings greater than 1 ppm have also been detected in the PVC plant. 7(B)

E. The large number of excess emission hours reported may indicate Formosa has not adequately maintained equipment, resulting in frequent process shutdowns/startups. In order to assess the frequency of emissions directly related to startup or shutdown activity at Formosa, NEIC evaluated Formosa excess emission reports. In total, Formosa reported over 1,500 hours of excess emissions during startup/shutdown periods between January 2001 and September 2003. Formosa also reported over 480 hours of excess emissions between January 2001 and September 2003 for which no cause could be determined. 7(B)

F. Evaluation of excess emission reports for Formosa shows at least 90,000 pounds of carbon monoxide, and at least 10,000 pounds of nitrogen oxides, were emitted by the facility, in excess of emission limits, from January 2001 through September 2003. To the extent these emissions were not caused by startup, shutdown, or malfunction events, Formosa would be in noncompliance with prescribed limits. 7(B)

G. Formosa's use of a soap-bubble solution to reduce leaks likely does not qualify as "an approved gas analyzer" under TCEQ 28MID, and may not guarantee the greatest leak reduction possible. Under the TCEQ 28MID program, Formosa is required to perform directed maintenance—monitoring while repairs are made—in order to obtain the greatest leak reduction possible. (Formosa is allowed to use favorable emissions factors for reporting 7(B)

annual emissions from equipment leaks under the TCEQ 28MID program.) Specific conditions in Formosa unit operating permits state "A directed maintenance program shall consist of the repair and maintenance of components assisted simultaneously by the use of an approved gas analyzer such that a minimum concentration of leaking VOC is obtained for each component being maintained." EAI monitoring technicians usually are present with gas analyzers during component repairs, but maintenance personnel reportedly also use a soap-bubble solution if EAI personnel are unavailable. NEIC could not establish the number of instances in which the soap-bubble solution was used as "directed maintenance." 1(B)

H. Although not required to be reported, NEIC found Formosa's calculation for reporting valve leak rates not to conform to standards provided in NSPS and NESHAP regulations. On most all semiannual submittals for HON Subpart H, NSPS Subpart VV, and NESHAP V, Formosa has reported leak percentages for each month monitoring was conducted. Because Formosa has chosen to monitor all process units on a quarterly basis, calculation and reporting of leak percentages is not required on NSPS Subpart VV and NESHAP V submittals. Since Formosa has reported leak percentage calculations, NEIC reviewed the methodology employed in the calculation and found it not to conform to standards provided in the NSPS and NESHAP regulations on normal leak percentage calculations. Specifically, valves on the delay-of-repair list, and repaired valves found leaking again in the monitoring quarter, are required to be included in the leak percentage calculation. Formosa provided notations in the reports, however, which state the other leaking valves were excluded from the calculation. 1(B)

I. NEIC identified 115 components in the HDPE, LLDPE, MT, OLEFINS, PP2, PVC, and VCM processing units with missing or unreadable tags. Formosa monitoring personnel typically use the LDAR identification tags to locate equipment for monitoring; if identification tags are missing or unreadable, or if there are multiple identification tags present, tracking the appropriate information, to ensure monitoring is conducted, can become difficult. In many instances, component tags were present but had been painted over several times, making accurate identification nearly impossible. In other instances, Formosa maintained several tags on the same LDAR component, again making accurate identification of the component difficult. In one instance, even when specific tag numbers for specific components were provided to Formosa officials, the associated LDAR records for the equipment could not be located in the company recordkeeping database. 1(B)

J. Formosa technicians likely did not monitor according to Reference Method 21, thereby, failing to identify equipment leaks. NEIC reviewed monitoring data collected by various LDAR technicians, and determined an unreasonable number of components were monitored on numerous occasions since 1999. Based on Formosa records, LDAR technicians monitored over 2,000 components in 9 instances, over 1,500 components in 27 separate instances, and over 1,000 components per day, per technician in 210 other instances between 1999 and November 2003. In NEIC experience, 1,000 components represents an upper maximum on the number of components which can be reasonably monitored, per Reference Method 21, in a normal workday. 1(B)

K. The document "Benzene Waste Operations NESHAP – Environmental Compliance Procedure 165" relied upon to establish compliance and prepare compliance reports has at least several inconsistencies. These inconsistencies raise questions as to the accuracy of previously submitted reports. 1(B)

L. [The range of benzene concentrations reported on the annual TAB submittals is highly variable. For several waste streams the benzene concentrations vary by three orders of magnitude. Ranges of this magnitude are not typically seen on TABs. Such variations in the benzene concentration raise questions as to the potential of using different sample locations, laboratory results, or data entry difficulties. There is minor impact on the overall reported TAB value due to the large variability in these particular waste streams.] 7(B)

M. [Formosa was unaware of which available option was being used to demonstrate compliance with the Subpart FF requirements. The selection and identification of the available compliance option forms the basis for numerous recordkeeping and reporting requirements. Depending on which option the company is operating under, there may be additional areas of noncompliance associated with the reporting requirements.] 7(B)

N. [The flow rate provided by Formosa for the skimmed hydrocarbon removed from the spent caustic tanks may be inaccurate. While in the field, operators provided information suggesting that the flow is significantly less than 0.5 gpm. However, subsequent to the on-site inspection the company provided information that indicated that hydrocarbon was continually removed from the Olefins II plant at a 50-gallon per minute rate. Combining this flow rate and a benzene concentration of 396,000 mg/L yields a TAB value well in excess of 25,000 Mg/yr. The lower flowrate provided by the operators is likely a more realistic value.] 7(B)

O. [Spent caustic is by far the largest source of waste benzene identified on the TAB. NEIC sampling results, combined with flowrate date provided during the inspection, show that the benzene quantity may be underreported. NEIC calculated the spent caustic benzene content by adding the benzene content from the hydrocarbon phase removed from the spent caustic tank with benzene content of the spent caustic as it enters the Zimpro process. Using flow rates provided by Formosa field operators and the NEIC sample results show that each individual OL I and OL II spent caustic waste stream is underreported by at least 30 Mg/yr.] 7(B)

P. [NEIC sample benzene analytical results are significantly different from those previously reported by Formosa. The NEIC benzene concentration from OL II spent caustic samples are more than double the highest value reported by Formosa. NEIC obtained a maximum value of 2,990 mg/L versus the Formosa typical range of 300 – 700 ppm with a maximum value of 1,303 ppm. Additionally, NEIC obtained sample results from the combined dilution steam stream which were two orders of magnitude lower than that expected. NEIC obtained analytical results from the combined stream of about 0.015 mg/L versus the expected value of about 8 ppm (using 2002 and 2003 data).] 7(B)

Q. [Naphthalene was detected in the skimmed oil phase recovered from the Olefins I CPI. Two sample results show naphthalene concentrations in excess of 20,000 and 50,000 mg/L. Reportedly very little hydrocarbon is ever recovered from this CPI. However, the Olefins I operator logbook shows that a transfer occurred on September 13, 2003. Because naphthalene has been detected in the oil phase it may also be present in the water phase. The water phase is routed to a nearby cooling tower and is used as makeup and, therefore, potentially released to the atmosphere.] 7(B)

R. [Sample results collected from the storm water sumps within the processing areas generally showed individual hydrocarbon concentrations significantly below 1 ppmv. However,] 7(B)

[naphthalene was detected in Olefins II sump AA at a concentration of 1 79 ppm. The source of this material is unknown.] 1(B)

APPENDIX D

Wastewater Treatment Figures

(2 pages)

FORMOSA UTILITY VENTURE LTD.

PERMIT RENEWAL DOCUMENTATION
BIOLOGICAL TREATMENT FACILITY PROCESS FLOW DIAGRAM

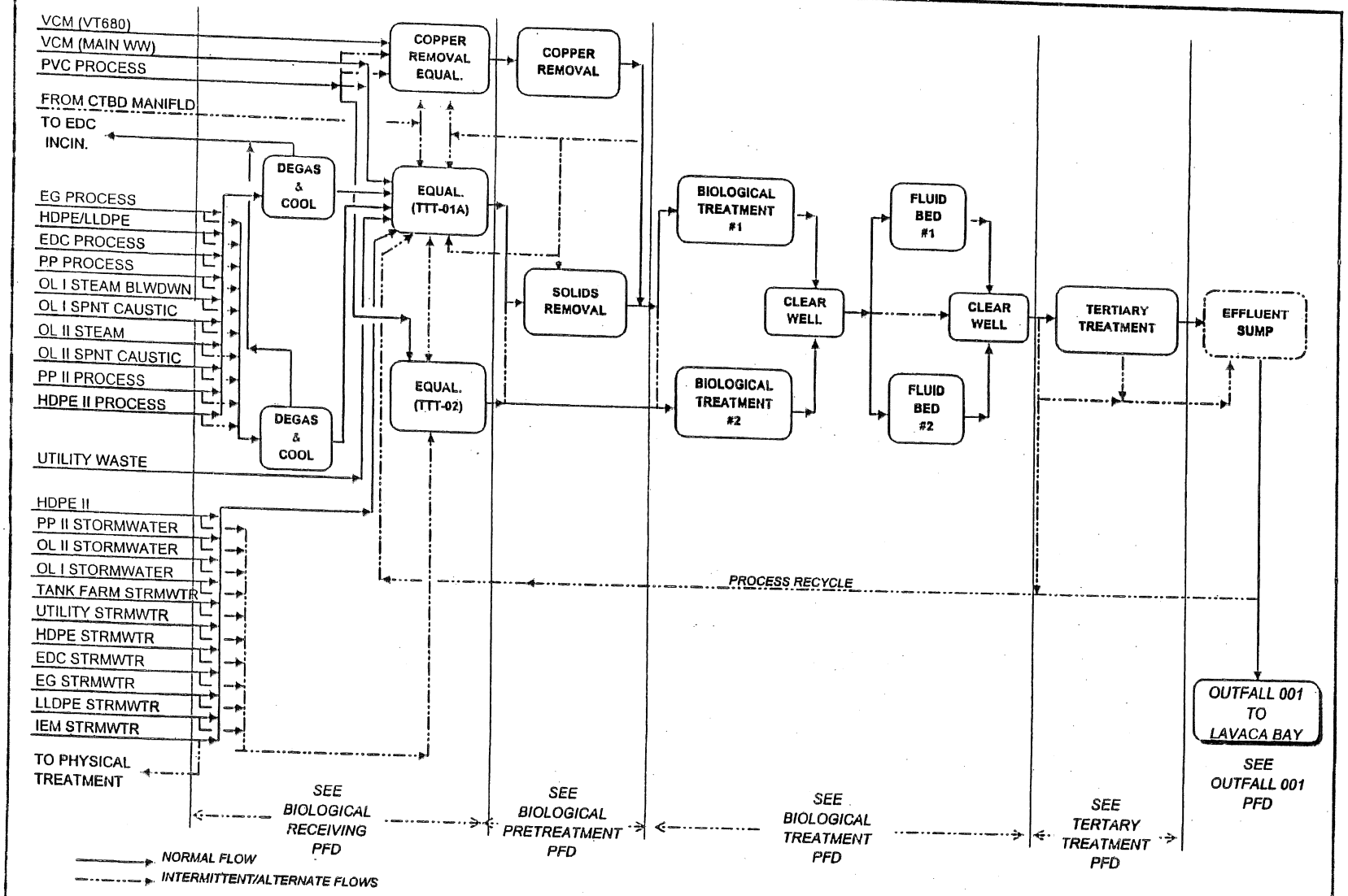

Department Name: UTILTIES

File Name: Ttech123 I BIO.FACILITY 1/21/98

FORMOSA UTILITY VENTURE LTD.

PERMIT RENEWAL DOCUMENTATION
PHYSICAL TREATMENT FACILITY PROCESS FLOW DIAGRAM

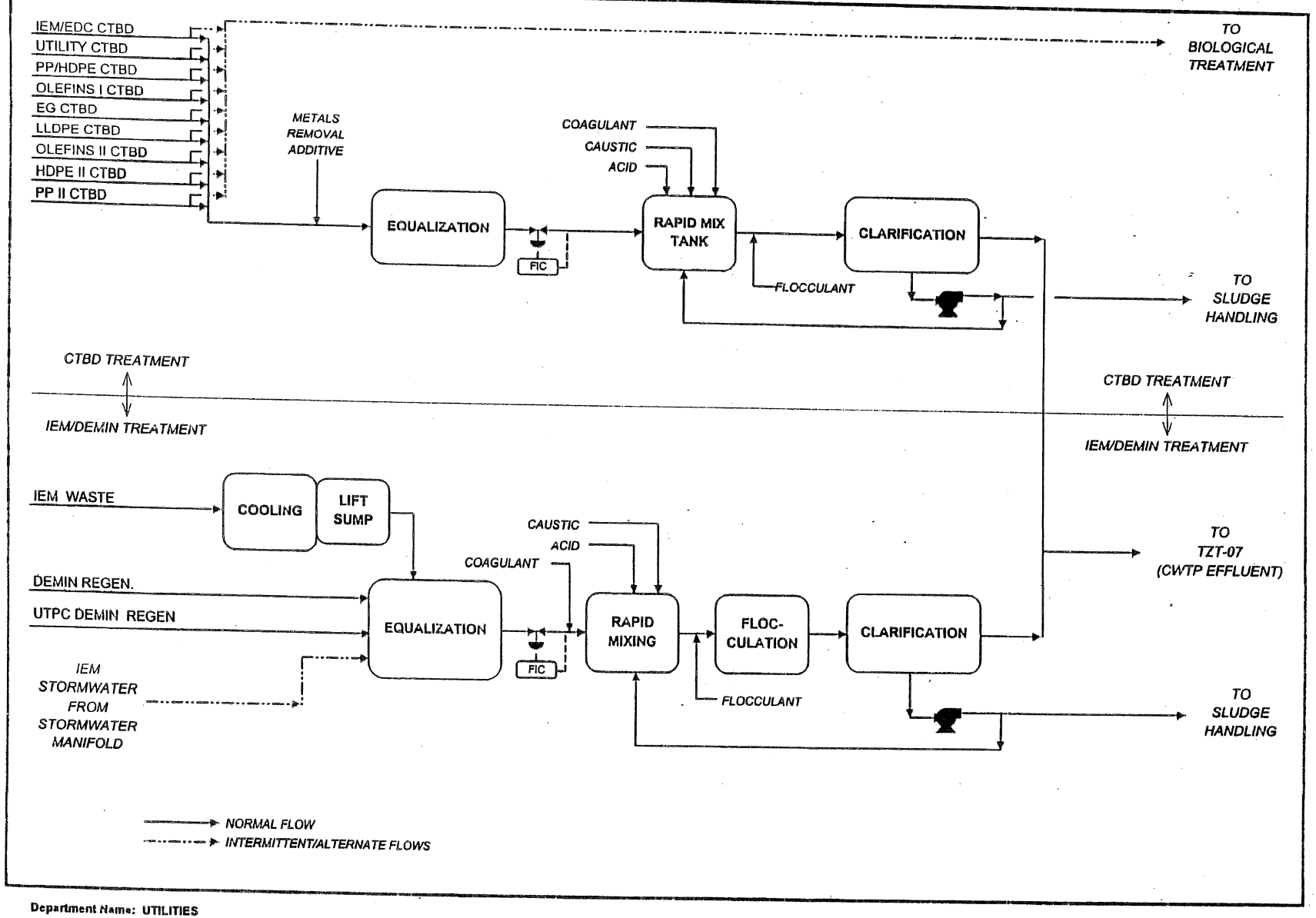

Department Name: UTILITIES

File Name: Ttech123 I PHYS. FACILITY 1/21/98

APPENDIX G

Discharge Monitoring Reports and Associated Cover Letters

(90 pages)

7PCW-18
Rec'd 2/10/01

ISO-9002 CERTIFIED
ISO-14001 CERTIFIED

P. O. BOX 700
201 FORMOSA DRIVE
POINT COMFORT, TEXAS 77978

PHONE: 361/987-7000
FAX: 361/987-2363

February 20, 2001

Certified Mail
7000-0520-0017-6336-1719

Ms. Debra Berry
U.S. Environmental Protection Agency
Compliance Assurance & Enforcement Division
Water Enforcement Branch (6 EN-WC)
1445 Ross Avenue
Dallas, TX 75202-2733

RE: NPDES Permit No. TX0085570
Addendum to January 2001
Discharge Monitoring Reports

Dear Ms. Berry:

Enclosed are the Discharge Monitoring Reports for the month of January 2001. For the Month of January 2001, Formosa had two storm water discharge exceedances. In a letter dated January 5, 2001, Formosa reported that the limit for Total Organic Carbon (TOC) was exceeded at Outfall 008. The TOC value that was reported for the January 1, 2001 incident was 124 ppm. The permit limit for TOC at Outfall 008 is 55 ppm. In a separate event, the pH maximum was exceeded at Outfall 008. This was reported in a letter dated January 16, 2001. The pH that was reported at Outfall 008 on January 10, 2001, was 9.2 standard units. The permitted maximum value for pH at Outfall 008 is 9.0 standard units.

Should you require additional information or assistance, please contact [Christopher T. Henke, at (361) 987-7463.] b(7)(c)

Sincerely,

R. P. Smith
Vice President/General Manager
Formosa Plastics Corporation, Texas

Attachment

NAME FORMOSA PLASTICS CORP., TEXAS
ADDRESS P.O. BOX 700
POINT COMFORT , TX 77978
FACILITY
LOCATION
ATTN: R. P. Smith, Vice-President/General Mgr.

(2-16) TX 0085570 PERMIT NUMBER

(17-19) 008 A DISCHARGE NUMBER

F-FINAL
STORM DRAINAGE/HUISACHE CREEK

*** NO DISCHARGE [ ] ***

NOTE: Read instructions before completing this form

MONITORING PERIOD

	YEAR	MO	DAY		YEAR	MO	DAY
FROM	01	01	01	TO	01	01	31
	(20-21)	(22-23)	(24-25)		(26-27)	(28-29)	(30-31)

PARAMETER (32-37)		(3 Card Only) QUANTITY OR LOADING (46-53) AVERAGE	(54-61) MAXIMUM	UNITS	(4 Card Only) QUALITY OR CONCENTRATION (38-45) MINIMUM	(46-53) AVERAGE	(54-61) MAXIMUM	UNITS	NO. EX. (62-63)	FREQUENCY OF ANALYSIS (64-68)	SAMPLE TYPE (69-70)
PH	SAMPLE MEASUREMENT	******	******		7.8	******	9.2	(12)	1	1/DAY	GRAB
00400 1 0 0 EFFLUENT GROSS VALUE	PERMIT REQUIREMENT	******	******	**** ****	6.0 MINIMUM	******	9.0 MAXIMUM	SU		1/DAY	GRAB
OIL AND GREASE FREON EXTR-GRAV METH	SAMPLE MEASUREMENT	******	******		******	******	2.8	(19)	0	1/DAY	GRAB
00556 1 0 0 EFFLUENT GROSS VALUE	PERMIT REQUIREMENT	******	******	**** ****	******	******	15 DLY MAX	MG/L		1/DAY	GRAB
CARBON, TOT ORGANIC (TOC)	SAMPLE MEASUREMENT	******	******		******	******	124	(19)	1	1/DAY	GRAB
00680 1 0 0 EFFLUENT GROSS VALUE	PERMIT REQUIREMENT	******	******	**** ****	******	******	55 DLY MAX	MG/L		1/DAY	GRAB
FLOW, IN CONDUIT OR THRU TREATMENT PLANT	SAMPLE MEASUREMENT	6.124	24.715	(03)	******	******	******		0	1/DAY	ESTIMA
50050 1 0 0 EFFLUENT GROSS VALUE	PERMIT REQUIREMENT	REPORT DLY AVG	REPORT DLY MAX	MGD	******	******	******	**** ****		1/DAY	ESTIMA
	SAMPLE MEASUREMENT										
	PERMIT REQUIREMENT										
	SAMPLE MEASUREMENT										
	PERMIT REQUIREMENT										
	SAMPLE MEASUREMENT										
	PERMIT REQUIREMENT										

NAME/TITLE PRINCIPLE EXECUTIVE OFFICER
R. P. Smith
Vice-President/General Mgr.
TYPED OR PRINTED

I certify under penalty of law that this document and all attachments were prepared under my direction or supervision in accordance with a system designed to assure that qualified personnel properly gather and evaluate the information submitted. Based on my inquiry of the person or persons who manage the system, or those persons directly responsible for gathering the information. The information submitted is, to the best of my knowledge and belief, true, accurate, and complete. I am aware that there are significant penalties for submitting false information, including the possibility of fine and imprisonment for knowing violations.

SIGNATURE OF PRINCIPLE EXECUTIVE OFFICER OR AUTHORIZED AGENT

TELEPHONE		DATE		
361	987-7000	01	02	15
AREA CODE	NUMBER	YEAR	MO	DAY

COMMENT AND EXPLANATION OF ANY VIOLATIONS (Reference all attachment here)
WHEN FLOWING.

Facility Name/Location if different)

NAME FORMOSA PLASTICS CORP., TEXAS

ADDRESS P.O. BOX 700

POINT COMFORT , TX 77978

FACILITY

LOCATION

ATTN: R. P. Smith, Vice-President/General Mgr.

DISCHARGE MONITORING REPORT (DMR)

(2-16) TX 0085570 PERMIT NUMBER

(17-19) 001 0 DISCHARGE NUMBER

MONITORING PERIOD	YEAR	MO	DAY		YEAR	MO	DAY
FROM	01	01	01	TO	01	03	31
	(20-21)	(22-23)	(24-25)		(26-27)	(28-29)	(30-31)

F-FINAL

QUARTERLY REPORTING

*** NO DISCHARGE |__| ***

NOTE: Read instructions before completing this form

PARAMETER (32-37)		(3 Card Only) (45-53) QUANTITY OR LOADING (54-61) AVERAGE	MAXIMUM	UNITS	(4 Card Only) (38-45) QUALITY OR CONCENTRATION (46-53) MINIMUM	(54-61) AVERAGE	MAXIMUM	UNITS	NO. EX. (62-63)	FREQUENCY OF ANALYSIS (64-68)	SAMPLE TYPE (69-70)
ACENAPHTHYLENE	SAMPLE MEASUREMENT	0.000	0.000	(26)	******	******	******		0	QTRLY	COMP24
34200 1 0 0 EFFLUENT GROSS VALUE	PERMIT REQUIREMENT	0.62 DLY AVG	1.67 DLY MAX	LBS/DY	******	******	******	**** ****		QTRLY	COMP24
ACENAPHTHENE	SAMPLE MEASUREMENT	0.000	0.000	(26)	******	******	******		0	QTRLY	COMP24
34205 1 0 0 EFFLUENT GROSS VALUE	PERMIT REQUIREMENT	0.62 DLY AVG	1.67 DLY MAX	LBS/DY	******	******	******	**** ****		QTRLY	COMP24
ACRYLONITRILE	SAMPLE MEASUREMENT	0.000	0.000	(26)	******	******	******		0	QTRLY	COMP24
34215 1 0 0 EFFLUENT GROSS VALUE	PERMIT REQUIREMENT	2.71 DLY AVG	6.84 DLY MAX	LBS/DY	******	******	******	**** ****		QTRLY	COMP24
ANTHRACENE	SAMPLE MEASUREMENT	0.000	0.000	(26)	******	******	******		0	QTRLY	COMP24
34220 1 0 0 EFFLUENT GROSS VALUE	PERMIT REQUIREMENT	0.62 DLY AVG	1.67 DLY MAX	LBS/DY	******	******	******	**** ****		QTRLY	COMP24
BENZO (B) FLUOROANTHENE (3,4-BENZO)	SAMPLE MEASUREMENT	0.000	0.000	(26)	******	******	******		0	QTRLY	COMP24
34230 1 0 0 EFFLUENT GROSS VALUE	PERMIT REQUIREMENT	0.65 DLY AVG	1.72 DLY MAX	LBS/DY	******	******	******	**** ****		QTRLY	COMP24
BENZO (K) FLUORANTHENE	SAMPLE MEASUREMENT	0.000	0.000	(26)	******	******	******		0	QTRLY	COMP24
34242 1 0 0 EFFLUENT GROSS VALUE	PERMIT REQUIREMENT	0.62 DLY AVG	1.67 DLY MAX	LBS/DY	******	******	******	**** ****		QTRLY	COMP24
BENZO (A) PYRENE	SAMPLE MEASUREMENT	0.000	0.000	(26)	******	******	******		0	QTRLY	COMP24
34247 1 0 0 EFFLUENT GROSS VALUE	PERMIT REQUIREMENT	0.65 DLY AVG	1.72 DLY MAX	LBS/DY	******	******	******	**** ****		QTRLY	COMP24

NAME/TITLE PRINCIPLE EXECUTIVE OFFICER

R. P. Smith
Vice-President/General Mgr.

TYPED OR PRINTED

I certify under penalty of law that this document and all attachments were prepared under my direction or supervision in accordance with a system designed to assure that qualified personnel properly gather and evaluate the information submitted. Based on my inquiry of the person or persons who manage the system, or those persons directly responsible for gathering the information. The information submitted is, to the best of my knowledge and belief, true, accurate, and complete. I am aware that there are significant penalties for submitting false information, including the possibility of fine and imprisonment for knowing violations.

SIGNATURE OF PRINCIPLE EXECUTIVE OFFICER OR AUTHORIZED AGENT

TELEPHONE		DATE		
361	987-7000	01	04	12
AREA CODE	NUMBER	YEAR	MO	DAY

COMMENT AND EXPLANATION OF ANY VIOLATIONS (Reference all attachment here)

CWA-Appendix G
EPA/FOIA2018-00165
VP0614

FORMOSA PLASTICS CORPORATION, TEXAS

ISO-9002 CERTIFIED
ISO-14001 CERTIFIED

P. O. BOX 700
201 FORMOSA DRIVE
POINT COMFORT, TEXAS 77978

PHONE: 361/987-7000
FAX: 361/987-2363

April 20, 2001

Certified Mail
7000-0520-0017-6336-4611

Ms. Debra Berry
U.S. Environmental Protection Agency
Compliance Assurance & Enforcement Division
Water Enforcement Branch (6 EN-WC)
1445 Ross Avenue
Dallas, TX 75202-2733

RE: NPDES Permit No. TX0085570
Addendum to March 2001
Discharge Monitoring Reports

Dear Ms. Berry:

Enclosed are the Discharge Monitoring Reports (DMR) for the month of March 2001. For the Month of March 2001, there are two discharge exceedances reported on the DMR.

One of the exceedances being reported is in regards to the Quarterly 24-hour acute biomonitoring toxicity testing for *Mysidopsis bahia*. This toxicity failure was originally reported to the EPA in a letter dated February 16, 2001. According to protocol, this failure is being reported in the March DMR because it is a quarterly permit requirement. All quarterly results that are required by the permit are reported in the last month of the quarter. Since this event occurred in the first quarter of 2001, it is being reported on the March DMR.

The second exceedance was for a chloroform exceedance that was originally reported to the EPA in a letter dated March 13, 2001. In this letter it was reported that on March 6, 2001 the daily maximum value for chloroform was 1.33 lbs/day. This amount exceeded the permitted value that is defined as 1.30 lbs/day. A manual correction was made on page 3 of 5 for Outfall 001. The correction is in regards to the daily maximum parameter for chloroform.

During a conversation between Mr. Bob Goodfellow of the EPA and Mr. Christopher Henke of Formosa on April 11, 2001, concerning significant digit reporting requirements for DMRs, it was relayed to Mr. Henke that when calculating values on the DMR the precision of the instrument must be utilized to determine the significant digits associated with that calculation. Additionally, upon completing the calculation, Standard Rounding Practices should be employed when determining the value required to be reported in the DMR. The two criteria discussed above were utilized in calculating the chloroform daily maximum value. It was determined that the value required to be reported by the permit was 1.33 lbs/day.

Should you require additional information or assistance, please contact [Christopher T. Henke, at (361) 987-7463.] b(7)(c)

Sincerely,

R. P. Smith
Vice President/General Manager
Formosa Plastics Corporation, Texas

Attachment

NAME FORMOSA PLASTICS CORP., TEXAS
ADDRESS P.O. BOX 700
POINT COMFORT , TX 77978
FACILITY
LOCATION
ATTN: R. P. Smith, Vice-President/General Mgr.

(2-16) TX 0085570 PERMIT NUMBER

(17-19) 001 A DISCHARGE NUMBER

F-FINAL
TRTD PROCESS/UTIL WASTEWATER

*** NO DISCHARGE |__| ***

MONITORING PERIOD

	YEAR	MO	DAY		YEAR	MO	DAY
FROM	01	03	01	TO	01	03	31
	(20-21)	(22-23)	(24-25)		(26-27)	(28-29)	(30-31)

NOTE: Read instructions before completing this form

PARAMETER (32-37)		(3 Card Only) QUANTITY OR LOADING (46-53) AVERAGE	(54-61) MAXIMUM	UNITS	(4 Card Only) QUALITY OR CONCENTRATION (38-45) MINIMUM	(46-53) AVERAGE	(54-61) MAXIMUM	UNITS	NO. EX. (62-63)	FREQUENCY OF ANALYSIS (64-68)	SAMPLE TYPE (69-70)
CHLOROFORM	SAMPLE MEASUREMENT	0.464	1.33 ~~1.331~~	(26)	******	******	******		1	2/WEEK	COMP24
32106 1 0 0 EFFLUENT GROSS VALUE	PERMIT REQUIREMENT	0.59 DLY AVG	1.30 DLY MAX	LBS/DY	******	******	******	**** ****		2/WEEK	COMP24
TOLUENE	SAMPLE MEASUREMENT	0.000	0.000	(26)	******	******	******		0	2/WEEK	COMP24
34010 1 0 0 EFFLUENT GROSS VALUE	PERMIT REQUIREMENT	0.74 DLY AVG	2.26 DLY MAX	LBS/DY	******	******	******	**** ****		2/WEEK	COMP24
BENZENE	SAMPLE MEASUREMENT	0.000	0.000	(26)	******	******	******		0	2/WEEK	COMP24
34030 1 0 0 EFFLUENT GROSS VALUE	PERMIT REQUIREMENT	1.05 DLY AVG	3.85 DLY MAX	LBS/DY	******	******	******	**** ****		2/WEEK	COMP24
CHLOROBENZENE	SAMPLE MEASUREMENT	0.000	0.000	(26)	******	******	******		0	2/WEEK	COMP24
34301 1 0 0 EFFLUENT GROSS VALUE	PERMIT REQUIREMENT	0.42 DLY AVG	0.79 DLY MAX	LBS/DY	******	******	******	**** ****		2/WEEK	COMP24
METHYL CHLORIDE	SAMPLE MEASUREMENT	0.000	0.000	(26)	******	******	******		0	2/WEEK	COMP24
34418 1 0 0 EFFLUENT GROSS VALUE	PERMIT REQUIREMENT	2.43 DLY MAX	5.37 DLY MAX	LBS/DY	******	******	******	**** ****		2/WEEK	COMP24
METHYLENE CHLORIDE, SUSPENDED	SAMPLE MEASUREMENT	0.000	0.000	(26)	******	******	******		0	2/WEEK	COMP24
34425 1 0 0 EFFLUENT GROSS VALUE	PERMIT REQUIREMENT	1.13 DLY AVG	2.52 DLY MAX	LBS/DY	******	******	******	**** ****		2/WEEK	COMP24
TETRACHLOROETHYLENE	SAMPLE MEASUREMENT	0.000	0.000	(26)	******	******	******		0	2/WEEK	COMP24
34475 1 0 0 EFFLUENT GROSS VALUE	PERMIT REQUIREMENT	0.62 DLY AVG	1.58 DLY MAX	LBS/DY	******	******	******	**** ****		2/WEEK	COMP24

NAME/TITLE PRINCIPLE EXECUTIVE OFFICER
R. P. Smith
Vice-President/General Mgr.
TYPED OR PRINTED

I certify under penalty of law that this document and all attachments were prepared under my direction or supervision in accordance with a system designed to assure that qualified personnel properly gather and evaluate the information submitted. Based on my inquiry of the person or persons who manage the system, or those persons directly responsible for gathering the information. The information submitted is, to the best of my knowledge and belief, true, accurate, and complete. I am aware that there are significant penalties for submitting false information, including the possibility of fine and imprisonment for knowing violations.

SIGNATURE OF PRINCIPLE EXECUTIVE OFFICER OR AUTHORIZED AGENT

TELEPHONE		DATE		
361	987-7000	01	04	12
AREA CODE	NUMBER	YEAR	MO	DAY

COMMENT AND EXPLANATION OF ANY VIOLATIONS (Reference all attachment here)

LTR DATED 09/16/93 PERMITTED PHASE C. THE PERMITTEE SHALL CONTINOUSLY MONITOR THE BACK PRESSURE OF THE OUTFALL 001 DISCHARGE TO LAVACA BAY AND MAINTAIN THE MINIMUM RECOMMENDED BACK PRESSURE FOR THE MEASURED FLOW AT ALL TIMES

CWA-Appendix G
EPA/FOIA2018-00168
VP0614

PERMITEE NAME/ADDRESS (Include Facility Name/Location if different)

NAME: FORMOSA PLASTICS CORP., TEXAS

ADDRESS: P.O. BOX 700
POINT COMFORT , TX 77978

FACILITY

LOCATION

ATTN: R. P. Smith, Vice-President/General Mgr.

NATIONAL POLLUTANT DISCHARGE ELIMINATION SYSTEM (NPDES)

DISCHARGE MONITORING REPORT (DMR)

(2-16) TX 0085570 PERMIT NUMBER

(17-19) TX1 A DISCHARGE NUMBER

MONITORING PERIOD

	YEAR	MO	DAY		YEAR	MO	DAY
FROM	01	03	01	TO	01	03	31
	(20-21)	(22-23)	(24-25)		(26-27)	(28-29)	(30-31)

MAJOR

F-FINAL

WHOLE EFFLUENT TOXICITY

*** NO DISCHARGE |__| ***

NOTE: Read Instructions before completing this form

PARAMETER (32-37)		QUANTITY OR LOADING (3 Card Only) (46-53) AVERAGE	(54-61) MAXIMUM	UNITS	QUALITY OR CONCENTRATION (4 Card Only) (38-45) MINIMUM	(46-53) AVERAGE	(54-61) MAXIMUM	UNITS	NO. EX. (62-63)	FREQUENCY OF ANALYSIS (64-68)	SAMPLE TYPE (69-70)
LF P/F LETH STATRE 7 DAY CHR MYSID. BAHIA TLP3E 1 0 0 EFFLUENT GROSS VALUE	SAMPLE MEASUREMENT	******	******		******	0	******	(9A)	0	1/MON.	COMP24
	PERMIT REQUIREMENT	******	******	**** ****	******	REPORT DLYAVMIN	******	PASS=0 FAIL=1		1/MON.	COMP24
LF P/F LETH STATRE 7 DAY CHR MENIDIA TLP6B 1 0 0 EFFLUENT GROSS VALUE	SAMPLE MEASUREMENT	******	******		******	0	******	(9A)	0	1/MON.	COMP24
	PERMIT REQUIREMENT	******	******	**** ****	******	REPORT DLYAVMIN	******	PASS=0 FAIL=1		1/MON.	COMP24
NOEL LETHAL STATRE 7 DAY CHR MYSID. BAHIA TOP3E 1 0 0 EFFLUENT GROSS VALUE	SAMPLE MEASUREMENT	******	******		******	40	******	(23)	0	1/MON.	COMP24
	PERMIT REQUIREMENT	******	******	**** ****	******	REPORT DLYAVMIN	******	PER-CENT		1/MON.	COMP24
NOEL LETHAL STATRE 7 DAY CHR MENIDIA TOP6B 1 0 0 EFFLUENT GROSS VALUE	SAMPLE MEASUREMENT	******	******		******	40	******	(23)	0	1/MON.	COMP24
	PERMIT REQUIREMENT	******	******	**** ****	******	REPORT DLYAVMIN	******	PER-CENT		1/MON.	COMP24
NOEL SUB-LETH STATRE 7 DAY CHR MYSID. BAHIA TPP3E 1 0 0 EFFLUENT GROSS VALUE	SAMPLE MEASUREMENT	******	******		******	40	******	(23)	0	1/MON.	COMP24
	PERMIT REQUIREMENT	******	******	**** ****	******	REPORT DLYAVMIN	******	PER-CENT		1/MON.	COMP24
NOEL SUB-LETH STATRE 7 DAY CHR MENIDIA TPP6B 1 0 0 EFFLUENT GROSS VALUE	SAMPLE MEASUREMENT	******	******		******	40	******	(23)	0	1/MON.	COMP24
	PERMIT REQUIREMENT	******	******	**** ****	******	REPORT DLYAVMIN	******	PER-CENT		1/MON.	COMP24
COEF OF VAR STATRE 7 DAY CHR MYSID. BAHIA TQP3E 1 0 0 EFFLUENT GROSS VALUE	SAMPLE MEASUREMENT	******	******		******	11.90	******	(23)	0	1/MON.	COMP24
	PERMIT REQUIREMENT	******	******	**** ****	******	REPORT DLYAVMIN	******	PER-CENT		1/MON.	COMP24

NAME/TITLE PRINCIPLE EXECUTIVE OFFICER

R. P. Smith
Vice-President/General Mgr.

TYPED OR PRINTED

I certify under penalty of law that this document and all attachments were prepared under my direction or supervision in accordance with a system designed to assure that qualified personnel properly gather and evaluate the information submitted. Based on my inquiry of the person or persons who manage the system, or those persons directly responsible for gathering the information. The information submitted is, to the best of my knowledge and belief, true, accurate, and complete. I am aware that there are significant penalties for submitting false information, including the possibility of fine and imprisonment for knowing violations.

SIGNATURE OF PRINCIPLE EXECUTIVE OFFICER OR AUTHORIZED AGENT

TELEPHONE		DATE		
361	987-7000	01	04	12
AREA CODE	NUMBER	YEAR	MO	DAY

COMMENT AND EXPLANATION OF ANY VIOLATIONS (Reference all attachment here)

(PASS=0 FAIL=1) RPT PASS AS '0' RPT FAIL AS '1' IN CONC AVG ABOVE. THE 1ST TOXICITY TEST FOR EACH SPECIES SHALL BE COMPLETED WITHIN 60 DAYS OF THE EFF DATE OF THE PERMIT & SUBMITTED WITH THE NEXT MONTHLY DMR. ALL ADDITIONAL TESTS WILL BE CONDUCTED AT THE FREQ ESTABLISHEDC IN THE PERMIT BEGINING WITH THE EFF DATE.

Facility (Location if different)

NAME: FORMOSA PLASTICS CORP., TEXAS

ADDRESS: P.O. BOX 700

POINT COMFORT , TX 77978

FACILITY

LOCATION

ATTN: R. P. Smith, Vice-President/General Mgr.

DISCHARGE MONITORING REPORT (DMR)

(2-16) TX 0085570 PERMIT NUMBER

(17-19) TX1 A DISCHARGE NUMBER

MONITORING PERIOD

	YEAR	MO	DAY		YEAR	MO	DAY
FROM	01	03	01	TO	01	03	31
	(20-21)	(22-23)	(24-25)		(26-27)	(28-29)	(30-31)

MAJOR

F-FINAL

WHOLE EFFLUENT TOXICITY

*** NO DISCHARGE [ ] ***

NOTE: Read instructions before completing this form

PARAMETER (32-37)		(3 Card Only) QUANTITY OR LOADING (46-53) AVERAGE	(54-61) MAXIMUM	UNITS	(4 Card Only) QUALITY OR CONCENTRATION (38-45) MINIMUM	(46-53) AVERAGE	(54-61) MAXIMUM	UNITS	NO. EX. (62-63)	FREQUENCY OF ANALYSIS (64-68)	SAMPLE TYPE (69-70)
COEF OF VAR STATRE 7 DAY CHR MENIDIA TQP6B 1 0 0 EFFLUENT GROSS VALUE	SAMPLE MEASUREMENT	******	******		******	16.06	******	(23)	0	1/MON.	COMP24
	PERMIT REQUIREMENT	******	******	**** ****	******	REPORT DLYAVMIN	******	PER-CENT		1/MON.	COMP24
WHOLE EFFLUENT TOXICITY 22414 S 0 0 EFFLUENT GROSS VALUE	SAMPLE MEASUREMENT	******	******		40	******	******	(23)	0	1/MON.	COMP24
	PERMIT REQUIREMENT	******	******	**** ****	5.0 DLYAVMIN	******	******	PER-CENT		1/MON.	COMP24
WHOLE EFFLUENT TOXICITY 22414 1 0 0 EFFLUENT GROSS VALUE	SAMPLE MEASUREMENT	******	******		40	******	******	(23)	0	1/MON.	COMP24
	PERMIT REQUIREMENT	******	******	**** ****	5.0 7 DAYMIN	******	******	PER-CENT		1/MON.	COMP24
	SAMPLE MEASUREMENT										
	PERMIT REQUIREMENT										
	SAMPLE MEASUREMENT										
	PERMIT REQUIREMENT										
	SAMPLE MEASUREMENT										
	PERMIT REQUIREMENT										
	SAMPLE MEASUREMENT										
	PERMIT REQUIREMENT										

NAME/TITLE PRINCIPLE EXECUTIVE OFFICER

R. P. Smith
Vice-President/General Mgr.

TYPED OR PRINTED

I certify under penalty of law that this document and all attachments were prepared under my direction or supervision in accordance with a system designed to assure that qualified personnel properly gather and evaluate the information submitted. Based on my inquiry of the person or persons who manage the system, or those persons directly responsible for gathering the information. The information submitted is, to the best of my knowledge and belief, true, accurate, and complete. I am aware that there are significant penalties for submitting false information, including the possibility of fine and imprisonment for knowing violations.

SIGNATURE OF PRINCIPLE EXECUTIVE OFFICER OR AUTHORIZED AGENT

TELEPHONE		DATE		
361	987-7000	01	04	12
AREA CODE	NUMBER	YEAR	MO	DAY

COMMENT AND EXPLANATION OF ANY VIOLATIONS (Reference all attachment here)

(PASS=0 FAIL=1) RPT PASS AS '0' RPT FAIL AS '1' IN CONC AVG ABOVE. THE 1ST TOXICITY TEST FOR EACH SPECIES SHALL BE COMPLETED WITHIN 60 DAYS OF THE EFF DATE OF THE PERMIT & SUBMITTED WITH THE NEXT MONTHLY DMR. ALL ADDITIONAL TESTS WILL BE CONDUCTED AT THE FREQ ESTABLISHEDC IN THE PERMIT BEGINING WITH THE EFF DATE.

CWA-Appendix G

EPA/FOIA2018-00170

VP0614

Chris H.

ISO-9002 CERTIFIED
ISO-14001 CERTIFIED

P. O. BOX 700
201 FORMOSA DRIVE
POINT COMFORT, TEXAS 77978

PHONE: 361/987-7000
FAX: 361/987-2363

May 18, 2001

Certified Mail
7000-1670-0009-4185-6086

Ms. Debra Berry
U.S. Environmental Protection Agency
Compliance Assurance & Enforcement Division
Water Enforcement Branch (6 EN-WC)
1445 Ross Avenue
Dallas, TX 75202-2733

RE: NPDES Permit No. TX0085570
Addendum to April 2001
Discharge Monitoring Reports

Dear Ms. Berry:

Enclosed are the Discharge Monitoring Reports (DMR) for the month of April 2001. For the Month of April 2001, there are no discharge exceedances reported on the DMR.

During the month of April 2001, there was one permit noncompliance reported to the EPA. On April 12, 2001, during the routine composite sample collection, a wastewater operator failed to collect the fourth sample for semivolatile and volatile analysis. Pursuant to Part II, Section G of the current discharge permit, the permittee is required to collect four (4) aliquots during a 24-hour period at regular intervals for semi-volatile and volatile composite analysis. On the day listed above, only three (3) aliquots were collected. This noncompliance was initially reported to the EPA on April 16, 2001.

Formosa performed the analysis on the aliquots that were collected, and included this in the calculated values presented in the DMR. Due to the missed sample, the volatile and semivolatile calculated loadings may or may not have been affected.

Additionally, Formosa would also like to indicate that during the month of April 2001, the flow and permit parameters indicated on the DMR for Outfall 010 are the result of hydrostatic test water being discharged. Per direction given by both the EPA and the TNRCC, Formosa is monitoring and reporting this water as a discharge to insure that the water adheres to the permit parameters listed in the discharge permits.

Should you require additional information or assistance, please contact Christopher T. Henke, at (361) 987-7463. b(7)(c)

Sincerely,

R. P. Smith
Vice President/General Manager
Formosa Plastics Corporation, Texas

Attachment

ISO-9002 CERTIFIED
ISO-14001 CERTIFIED

P. O. BOX 700
201 FORMOSA DRIVE
POINT COMFORT, TEXAS 77978

PHONE: 361/987-7000
FAX: 361/987-2363

October 31, 2001

DHL No.
7474499211

Ms. Debra Berry
U.S. Environmental Protection Agency
Compliance Assurance & Enforcement Division
Water Enforcement Branch (6 EN-WC)
1445 Ross Avenue
Dallas, TX 75202-2733

RE: TPDES Permit No. 02436
EPA ID No. TX0085570
Addendum to June, July and August 2001
Discharge Monitoring Reports

Dear Ms. Berry:

Enclosed are the Discharge Monitoring Reports (DMR) for the months of June, July and August 2001. As was initially indicated in the original DMR there was one permit exceedance reported for the month of June, no permit exceedances during the month of July and one permit exceedance for the month of August.

As the result of the issuance of the facility's TPDES Discharge Permit, no preprinted DMR Forms were available during June, July and August. In lieu of the preprinted forms the EPA, Ms. Debra Berry, instructed FPC-TX to modify the previously utilized self-generated forms to the best of FPC-TX ability and submit them per the TPDES permit requirements. This was also presented in a letter sent to FPC-TX by the EPA dated July 20, 2001. Pursuant to the instruction given by the EPA, FPC-TX submitted the modified reports for June, July and August 2001.

Since the original submission of the reports for the months indicated above, the EPA has determined that there were several changes and/or omissions that needed to be corrected by FPC-TX. As instructed by the EPA, Ms. Debra Berry, the corrections were made on the forms originally submitted for June, July and August 2001. These corrections have been indicated on the attached reports by yellow highlighting.

In addition, a typographical error was found on the June DMR report regarding the maximum temperature recorded at Outfall 001 for the month. Originally the temperature was reported as 93°F and this has been corrected to reflect the maximum temperature recorded was in fact 94°F.

Should you require additional information or assistance, please contact Christopher T. Henke, at (361) 987-7463.

b7(c)

Sincerely,

R. P. Smith
Vice President/General Manager
Formosa Plastics Corporation, Texas

Attachment

PERMITTEE NAME/ADDRESS: (Include Facility Name/Location if different)

NAME: FORMOSA PLASTICS CORP., TEXAS

ADDRESS: P.O. BOX 700
POINT COMFORT, TX 77978

FACILITY:

LOCATION:

ATTN: R. P. Smith, Vice-President/General Mgr.

NATIONAL POLLUTANT DISCHARGE ELIMINATION SYSTEM (NPDES)

DISCHARGE MONITORING REPORT (DMR)

TX 0085570 — PERMIT NUMBER (2-16)

008 A — DISCHARGE NUMBER (17-19)

MONITORING PERIOD

FROM YEAR 01 MO 06 DAY 01 (20-21) (22-23) (24-25) TO YEAR 01 MO 06 DAY 30 (26-27) (28-29) (30-31)

MAJOR

F-FINAL

3,000 FT N ST HWY 35

*** NO DISCHARGE ☐ ***

FORM APPROVED
OMB No 2040-0004

NOTE: Read Instructions before completing this form.

PARAMETER (32-37)		(3 Card Only) (46-53) QUANTITY OR LOADING (54-61) AVERAGE	MAXIMUM	UNITS	(4 Card Only) (38-45) QUALITY OR CONCENTRATION (46-53) (54-61) MINIMUM	AVERAGE	MAXIMUM	UNITS	NO. EX (62-63)	FREQUENCY OF ANALYSIS (64-68)	SAMPLE TYPE (69-70)
PH 00400 1 0 0 EFFLUENT GROSS VALUE	SAMPLE MEASUREMENT	*******	******		7.0	*******	9.2	(12)	1	1/DAY	GRAB
	PERMIT REQUIREMENT	*******	******	**** ****	6.0 MINIMUM	*******	9.0 MAXIMUM	SU		1/DAY	GRAB
OIL & GREASE 00556 1 0 0 EFFLUENT GROSS VALUE	SAMPLE MEASUREMENT	*******	******		******	*******	9	(19)	0	1/DAY	GRAB
	PERMIT REQUIREMENT	*******	******	**** ****	******	*******	15 DAILY MX	MG/L		1/DAY	GRAB
CARBON, TOT ORGANIC (TOC) 00680 1 0 0 EFFLUENT GROSS VALUE	SAMPLE MEASUREMENT	*******	******		******	*******	18	(19)	0	1/DAY	GRAB
	PERMIT REQUIREMENT	*******	******	**** ****	******		55 DAILY MX	MG/L		1/DAY	GRAB
	SAMPLE MEASUREMENT										
	PERMIT REQUIREMENT										
	SAMPLE MEASUREMENT										
	PERMIT REQUIREMENT										
	SAMPLE MEASUREMENT										
	PERMIT REQUIREMENT										
	SAMPLE MEASUREMENT										
	PERMIT REQUIREMENT										

NAME / TITLE PRINCIPAL EXECUTIVE OFFICER

R.P. Smith

Vice-President/General Mgr.

TYPED OR PRINTED

I CERTIFY UNDER PENALTY OF LAW THAT I HAVE PERSONALLY EXAMINED AND AM FAMILIAR WITH THE INFORMATION SUBMITTED HEREIN; AND BASED ON MY INQUIRY OF THOSE INDIVIDUALS IMMEDIATELY RESPONSIBLE FOR OBTAINING THE INFORMATION, I BELIEVE THE SUBMITTED INFORMATION IS TRUE, ACCURATE AND COMPLETE. I AM AWARE THAT THERE ARE SIGNIFICANT PENALTIES FOR SUBMITTING FALSE INFORMATION, INCLUDING THE POSSIBILITY OF FINE AND IMPRISONMENT. SEE 18 U.S.C. § 1001 AND 33 U.S.C. § 1319. (Penalties under these statutes may include fines up to $10,000 and/or maximum imprisonment of between 6 months and 5 years.)

SIGNATURE OF PRINCIPAL EXECUTIVE OFFICER OR AUTHORIZED AGENT

TELEPHONE: 361 | 987-7000 (area code NUMBER)

DATE: 01 | 10 | 22 (YEAR | MO | DAY)

Forms by ChemSW(707)864-0845;p/n11090dmr;v5.20;1/1/91

COMMENT AND EXPLANATION OF ANY VIOLATIONS (Reference all attachments here)

WHEN DISCHARGING, INITIAL SAMPLE COLLECTED WITHIN 15 MINUTES AFTER A DISCHARGE BEGINS.

TPDES 02436

EPA Form 3320-1 (Rev. 8-95) *Previous edition to be used until supply is exhausted.* (REPLACES EPA FORM T-40 WHICH MAY NOT BE USED.)

PERMIT: ...E/ADDRESS: (Include Facility Name/...

NAME: FORMOSA PLASTICS CORP., TEXAS

ADDRESS: P.O. BOX 700
POINT COMFORT, TX 77978

FACILITY:

LOCATION:

ATTN: R. P. Smith, Vice-President/General Mgr.

NATIONAL POLLUTANT DISCHARGE ELIMINATION SYSTEM (NPDES)

DISCHARGE MONITORING REPORT (DMR)

TX 0085570 — PERMIT NUMBER (2-16)

003 A — DISCHARGE NUMBER (17-19)

MONITORING PERIOD

FROM YEAR 01 MO 08 DAY 01 (20-21) (22-23) (24-25) TO YEAR 01 MO 08 DAY 31 (26-27) (28-29) (30-31)

MAJOR

F-FINAL

NEAR UTILITIES BLOCK

*** NO DISCHARGE ☐ ***

FORM APPROVED
OMB No.2040-0004

NOTE: Read instructions before completing this form.

PARAMETER (32-37)		QUANTITY OR LOADING (3 Card Only) (46-53) AVERAGE	MXIMUM (54-61)	UNITS	QUALITY OR CONCENTRATION (4 Card Only) (38-45) MINIMUM	AVERAGE (46-53)	MXIMUM (54-61)	UNITS	NO. EX (62-63)	FREQUENCY OF ANALYSIS (64-68)	SAMPLE TYPE (69-70)
PH 00400 1 0 0 EFFLUENT GROSS VALUE	SAMPLE MEASUREMENT	*******	******		7.5	*******	9.2	(12)	1	1/DAY	GRAB
	PERMIT REQUIREMENT	*******	******	**** ****	6.0 MINIMUM	*******	9.0 MAXIMUM	SU		1/DAY	GRAB
OIL & GREASE 00556 1 0 0 EFFLUENT GROSS VALUE	SAMPLE MEASUREMENT	*******	******		******	*******	4	(19)	0	1/DAY	G[illegible]
	PERMIT REQUIREMENT	*******	******	**** ****	******	*******	15 DLY MX	MG/L		1/DAY	GRAB
CARBON, TOT ORGANIC (TOC) 00680 1 0 0 EFFLUENT GROSS VALUE	SAMPLE MEASUREMENT	*******	******		******	*******	14	(19)	0	1/DAY	GRAB
	PERMIT REQUIREMENT	*******	******	**** ****	******	*******	55 DLY MX	MG/L		1/DAY	GRAB
1,2 DICHLOROETHANE, TOTAL WEIGHT 34531 1 0 0 EFFLUENT GROSS VALUE	SAMPLE MEASUREMENT	*******	******		******	******	0.0	(19)	0	1/DAY	GRAB
	PERMIT REQUIREMENT	*******	******	**** ****	******	******	0.4 DLY AVG	MG/L		1/DAY	GRAB
PURGEABLE HYDRO-CARBONS, METH. 601 03768 1 0 0 EFFLUENT GROSS VALUE	SAMPLE MEASUREMENT	*******	******		******	0.0	0.0	(19)	0	1/DAY	GRAB
	PERMIT REQUIREMENT	*******	******	**** ****	******	REPORT DLY AVG	REPORT DLY MX	MG/L		1/DAY	GRAB
	SAMPLE MEASUREMENT										
	PERMIT REQUIREMENT										
	SAMPLE MEASUREMENT										
	PERMIT REQUIREMENT										

NAME / TITLE PRINCIPAL EXECUTIVE OFFICER

R.P. Smith

Vice-President/General Mgr.

TYPED OR PRINTED

I CERTIFY UNDER PENALTY OF LAW THAT I HAVE PERSONALLY EXAMINED AND AM FAMILIAR WITH THE INFORMATION SUBMITTED HEREIN; AND BASED ON MY INQUIRY OF THOSE INDIVIDUALS IMMEDIATELY RESPONSIBLE FOR OBTAINING THE INFORMATION, I BELIEVE THE SUBMITTED INFORMATION IS TRUE, ACCURATE AND COMPLETE. I AM AWARE THAT THERE ARE SIGNIFICANT PENALTIES FOR SUBMITTING FALSE INFORMATION, INCLUDING THE POSSIBILITY OF FINE AND IMPRISONMENT. SEE 18 U.S.C. § 1001 AND 33 U.S.C. § 1319 (Penalties under these statutes may include fines up to $10,000 and/or maximum imprisonment of between 6 months and 5 years.)

SIGNATURE OF PRINCIPAL EXECUTIVE OFFICER OR AUTHORIZED AGENT

TELEPHONE: 361 | 987-7000 (area code NUMBER)

DATE: 01 | 10 | 23 (YEAR | MO | DAY)

COMMENT AND EXPLANATION OF ANY VIOLATIONS (Reference all attachments here)

WHEN DISCHARGING, INITIAL SAMPLE COLLECTED WITHIN 15 MINUTES AFTER A DISCHARGE BEGINS.

TPDES 02436

Forms by ChemSW(707)864-0845;p/n11090dmr,v3.20;1/1/94

EPA Form 3320-1 (Rev. 8-95) *Previous edition to be used until supply is exhausted.* (REPLACES EPA FORM T-40 WHICH MAY NOT BE USED.)

PERMITTEE NAME/ADDRESS: (Include Facility Name/Location if different)
NAME: FORMOSA PLASTICS CORP USA
ADDRESS: P.O. BOX 400
POINT COMFORT TX 77978

FACILITY: FORMOSA PLASTIC CORP USA

LOCATION: POINT COMFORT TX 77978
ATTN: R. P. Smith, Vice-President/General Mgr.

NATIONAL POLLUTANT DISCHARGE ELIMINATION SYSTEM (NPDES)
DISCHARGE MONITORING REPORT (DMR)

TX0085570	011 A
PERMIT NUMBER (2-16)	DISCHARGE NUMBER (17-19)

MONITORING PERIOD

	YEAR	MO.	DAY		YEAR	MO	DAY
FROM	01	10	01	TO	01	10	31
	(20-21)	(22-23)	(24-25)		(26-27)	(28-29)	(30-31)

MAJOR

F-FINAL
SE DOCK TANK FARM

*** NO DISCHARGE [XXX] ***

NOTE: Read instructions before completing this form.

PARAMETER (32-37)		(3 Card Only) (46-53) QUANTITY OR LOADING (54-61) AVERAGE	MAXIMUM	UNITS	(4 Card Only) (38-45) QUALITY OR CONCENTRATION (46-53) MINIMUM	AVERAGE	MAXIMUM	UNITS	NO. EX (62-63)	FREQUENCY OF ANALYSIS (64-68)	SAMPLE TYPE (69-70)
PH	SAMPLE MEASUREMENT	*******	******		NO DISCHG	*******	NO DISCHG	(12)		DAILY	GRAB
00400 1 0 0 EFFLUENT GROSS VALUE	PERMIT REQUIREMENT	*******	******	**** ****	6.0 MINIMUM	*******	9.0 MAXIMUM	SU		DAILY	GRAB
OIL & GREASE	SAMPLE MEASUREMENT	*******	******		******	*******	NO DISCHG	(19)		DAILY	G 3
00556 1 0 0 EFFLUENT GROSS VALUE	PERMIT REQUIREMENT	*******	******	**** ****	******	*******	15 DAILY MX	MG/L		DAILY	GRAB
CARBON, TOT ORGANIC (TOC)	SAMPLE MEASUREMENT	*******	******		******	*******	NO DISCHG	(19)		DAILY	GRAB
00680 1 0 0 EFFLUENT GROSS VALUE	PERMIT REQUIREMENT	*******	******	**** ****	******	*******	55 DAILY MX	MG/ L		DAILY	GRAB
	SAMPLE MEASUREMENT										
	PERMIT REQUIREMENT										
	SAMPLE MEASUREMENT										
	PERMIT REQUIREMENT										
	SAMPLE MEASUREMENT										
	PERMIT REQUIREMENT										
	SAMPLE MEASUREMENT										
	PERMIT REQUIREMENT										

NAME / TITLE PRINCIPAL EXECUTIVE OFFICER			TELEPHONE	DATE
R.P. Smith Vice-President/General Mgr.	I certify under penalty of law that this document and all attachments were prepared under my direction or supervision in accordance with a system designed to assure that qualified personnel properly gather and evaluate the information submitted. Based on my inquiry of the person or persons who manage the system, or those persons directly responsible for gathering the information, the information submitted is, to the best of my knowledge and belief, true, accurate, and complete. I am aware that there are significant penalties for submitting false information, including the possibility of fine and imprisonment for knowing violations.	SIGNATURE OF PRINCIPAL EXECUTIVE OFFICER OR AUTHORIZED AGENT	361 987-7000	01 | 11 | 15
TYPED OR PRINTED			area code NUMBER	YEAR | MO | DAY

COMMENT AND EXPLANATION OF ANY VIOLATIONS (Reference all attachments here)
WHEN DISCHARGING, INITIAL SAMPLE COLLECTED WITHIN 15 MINUTES AFTER A DISCHARGE BEGINS.
TPDES 02436

Forms by ChemSW(707)864-0848;p/n11090dmr;v5.20;1/1/94

CWA-Appendix G
EPA/FOIA2018-00177
VP0614

PERMIT NAME/ADDRESS: (Include Facility Name/Location if different)
NAME: FORMOSA PLASTICS CORP USA
ADDRESS: P.O. BOX 400
POINT COMFORT TX 77978

FACILITY: FORMOSA PLASTIC CORP USA

LOCATION: POINT COMFORT TX 77978
ATTN: R. P. Smith, Vice-President/General Mgr.

NATIONAL POLLUTANT DISCHARGE ELIMINATION SYSTEM (NPDES)
DISCHARGE MONITORING REPORT (DMR)

TX0085570 — PERMIT NUMBER (2-16)
012 A — DISCHARGE NUMBER (17-19)

MAJOR
F-FINAL
N E PLANT PROP/HIUSACHE CREEK
*** NO DISCHARGE [XXX] ***

MONITORING PERIOD
FROM YEAR 01 MO 10 DAY 01 (20-21) (22-23) (24-25)
TO YEAR 01 MO 10 DAY 31 (26-27) (28-29) (30-31)

NOTE: Read instructions before completing this form.

PARAMETER (32-37)		(3 Card Only) (46-53) QUANTITY OR LOADING (54-61) AVERAGE	MAXIMUM	UNITS	(4 Card Only) (38-45) QUALITY OR CONCENTRATION (46-53) MINIMUM	AVERAGE	MAXIMUM	UNITS	NO. EX (42-43)	FREQUENCY OF ANALYSIS (54-58)	SAMPLE TYPE (59-70)
PH 00400 1 0 0 EFFLUENT GROSS VALUE	SAMPLE MEASUREMENT	*******	******		NO DISCHG	*******	NO DISCHG	(12)		DAILY	GRAB
	PERMIT REQUIREMENT	*******	******	**** ****	6.0 MINIMUM	*******	9.0 MAXIMUM	SU		DAILY	GRAB
OIL & GREASE 00556 1 0 0 EFFLUENT GROSS VALUE	SAMPLE MEASUREMENT	*******	******		******	*******	NO DISCHG	(19)		DAILY	G. J
	PERMIT REQUIREMENT	*******	******	**** ****	******	*******	15 DAILY MX	MG/L		DAILY	GRAB
CARBON, TOT ORGANIC (TOC) 00680 1 0 0 EFFLUENT GROSS VALUE	SAMPLE MEASUREMENT	*******	******		******	*******	NO DISCHG	(19)		DAILY	GRAB
	PERMIT REQUIREMENT	*******	******	**** ****	******	*******	55 DAILY MX	MG/L		DAILY	GRAB
	SAMPLE MEASUREMENT										
	PERMIT REQUIREMENT										
	SAMPLE MEASUREMENT										
	PERMIT REQUIREMENT										
	SAMPLE MEASUREMENT										
	PERMIT REQUIREMENT										
	SAMPLE MEASUREMENT										
	PERMIT REQUIREMENT										

NAME / TITLE PRINCIPAL EXECUTIVE OFFICER
R.P. Smith
Vice-President/General Mgr.
TYPED OR PRINTED

I certify under penalty of law that this document and all attachments were prepared under my direction or supervision in accordance with a system designed to assure that qualified personnel properly gather and evaluate the information submitted. Based on my inquiry of the person or persons who manage the system, or those persons directly responsible for gathering the information, the information submitted is, to the best of my knowledge and belief, true, accurate, and complete. I am aware that there are significant penalties for submitting false information, including the possibility of fine and imprisonment for knowing violations.

SIGNATURE OF PRINCIPAL EXECUTIVE OFFICER OR AUTHORIZED AGENT

TELEPHONE: area code 361 NUMBER 987-7000
DATE: YEAR 01 MO 11 DAY 15

COMMENT AND EXPLANATION OF ANY VIOLATIONS (Reference all attachments here)
WHEN DISCHARGING, INITIAL SAMPLE COLLECTED WITHIN 15 MINUTES AFTER A DISCHARGE BEGINS.
TPDES 02436

Forms by ChemSW(707)864-0845;pm11090dmr;v5.20;1/1/94

FORMOSA PLASTICS CORPORATION, TEXAS

ISO-9002 CERTIFIED
ISO-14001 CERTIFIED

P. O. BOX 700
201 FORMOSA DRIVE
POINT COMFORT, TEXAS 77978

PHONE: 361/987-7000
FAX: 361/987-2363

FILE

December 20, 2001

Certified Mail
7001-0320-0001-4550-5926

Ms. Debra Berry
U.S. Environmental Protection Agency
Compliance Assurance & Enforcement Division
Water Enforcement Branch (6 EN-WC)
1445 Ross Avenue
Dallas, TX 75202-2733

RE: TPDES Permit No. 02436
EPA ID No. TX0085570
Addendum to November 2001
Discharge Monitoring Reports

Dear Ms. Berry:

Enclosed are the Discharge Monitoring Reports for the month of November 2001. For the Month of November 2001, there was one discharge exceedance reported on the DMR for pH at Storm Water Outfall 006.

In a letter dated November 13, 2001, Formosa reported that the limit for pH was exceeded at Outfall 006. The pH value that was reported for the November 6, 2001 incident was 9.4 s.u. The permit limit for pH at Outfall 006 is between 6 and 9 s.u. Initial notifications were made to Ms. Debra Berry, EPA, on November 7, 2001.

FPC-TX was preparing to perform routine maintenance on the control structure for Outfall 006 on November 6, 2001. In order for this activity to occur, residual storm water needed to be discharged. The operations department followed internal procedures for testing of the residual water prior to discharge. All pre-opening testing indicated that the residual storm water was within permit parameters. Upon receipt of the analysis, the gate was opened, and a permit required sample was taken after flow had been allowed to stabilize. The test results indicated that the pH value was 9.4 s.u. The operator immediately went to the Outfall and closed the gate to cease discharge. A vacuum truck was called to remove the remaining water.

In addition FPC-TX is also reporting that on November 17, 2001 the storm water discharge from Outfall 003 was not sampled for EDC and TPH. The other required parameters, TOC, Oil and Grease and pH, were sampled per the current permit requirements. All of these parameters were within the specified permit parameters.

Should you require additional information or assistance, please contact Christopher T. Henke, at (361) 987-7463. b(7)(c)

Sincerely,

R. P. Smith
Vice President/General Manager
Formosa Plastics Corporation, Texas

Attachment

PERMITTEE NAME/ADDRESS: (Include Facility Name/Location if different)

NAME: FORMOSA PLASTICS CORP USA
ADDRESS: P.O. BOX 400
POINT COMFORT TX 77978

FACILITY: FORMOSA PLASTIC CORP USA

LOCATION: POINT COMFORT TX 77978
ATTN: R. P. Smith, Vice-President/General Mgr.

NATIONAL POLLUTANT DISCHARGE ELIMINATION SYSTEM (NPDES)
DISCHARGE MONITORING REPORT (DMR)

TX0085570 — PERMIT NUMBER (2-16)
003 A — DISCHARGE NUMBER (17-19)

MONITORING PERIOD

	YEAR	MO	DAY		YEAR	MO	DAY
FROM	01	11	01	TO	01	11	30
	(20-21)	(22-23)	(24-25)		(26-27)	(28-29)	(30-31)

MAJOR
F-FINAL
NEAR UTILITIES BLOCK
*** NO DISCHARGE ☐ ***

NOTE: Read instructions before completing this form.

PARAMETER (32-37)		(3 Card Only) (46-53) QUANTITY OR LOADING (54-61) AVERAGE	MAXIMUM	UNITS	(4 Card Only) (38-45) QUALITY OR CONCENTRATION (46-53) (54-61) MINIMUM	AVERAGE	MAXIMUM	UNITS	NO. EX (62-63)	FREQUENCY OF ANALYSIS (64-68)	SAMPLE TYPE (69-70)
PH 00400 1 0 0 EFFLUENT GROSS VALUE	SAMPLE MEASUREMENT	*******	******		7.6	*******	8.1	(12)	0	DAILY	GRAB
	PERMIT REQUIREMENT	*******	******	**** ****	6.0 MINIMUM	*******	9.0 MAXIMUM	SU		DAILY	GRAB
OIL & GREASE 00556 1 0 0 EFFLUENT GROSS VALUE	SAMPLE MEASUREMENT	*******	******		******	*******	3	(19)	0	DAILY	GI
	PERMIT REQUIREMENT	*******	******	**** ****	******	*******	15 DAILY MX	MG/L		DAILY	GRAB
CARBON, TOT ORGANIC (TOC) 00680 1 0 0 EFFLUENT GROSS VALUE	SAMPLE MEASUREMENT	*******	******		******	*******	9	(19)	0	DAILY	GRAB
	PERMIT REQUIREMENT	*******	******	**** ****	******	*******	55 DAILY MX	MG/L		DAILY	GRAB
PURGEABLE HYDRO-CARBONS, METH. 601 03768 1 0 0 EFFLUENT GROSS VALUE	SAMPLE MEASUREMENT	*******	******		******	0.0	0.0	(19)	0	DAILY	GRAB
	PERMIT REQUIREMENT	*******	******	**** ****	******	REPORT DAILY AV	REPORT DAILY MX	MG/L		DAILY	GRAB
1,2 DICHLOROETHANE, TOTAL WEIGHT 34531 1 0 0 EFFLUENT GROSS VALUE	SAMPLE MEASUREMENT	*******	******		******	******	0.0	(19)	0	DAILY	GRAB
	PERMIT REQUIREMENT	*******	******	**** ****	******	******	0.4 DAILY AV	MG/L		DAILY	GRAB
	SAMPLE MEASUREMENT										
	PERMIT REQUIREMENT										
	SAMPLE MEASUREMENT										
	PERMIT REQUIREMENT										

NAME / TITLE PRINCIPAL EXECUTIVE OFFICER
R.P. Smith
Vice-President/General Mgr.
TYPED OR PRINTED

I certify under penalty of law that this document and all attachments were prepared under my direction or supervision in accordance with a system designed to assure that qualified personnel properly gather and evaluate the information submitted. Based on my inquiry of the person or persons who manage the system, or those persons directly responsible for gathering the information, the information submitted is, to the best of my knowledge and belief, true, accurate, and complete. I am aware that there are significant penalties for submitting false information, including the possibility of fine and imprisonment for knowing violations.

SIGNATURE OF PRINCIPAL EXECUTIVE OFFICER OR AUTHORIZED AGENT

TELEPHONE	DATE
361 | 987-7000	01 | 12 | 17
area code NUMBER	YEAR | MO | DAY

COMMENT AND EXPLANATION OF ANY VIOLATIONS (Reference all attachments here)
WHEN DISCHARGING, INITIAL SAMPLE COLLECTED WITHIN 15 MINUTES AFTER A DISCHARGE BEGINS.
TPDES 02436

Forms by:ChemSW(707)864-0845;p/n11090dmr;v5.20;1/1/91

This is a 4-part form.

PERMITTEE NAME/ADDRESS: (Include Facility Name/Location if different)
NAME: FORMOSA PLASTICS CORP USA
ADDRESS: P.O. BOX 400
POINT COMFORT TX 77978

FACILITY: FORMOSA PLASTIC CORP USA

LOCATION: POINT COMFORT TX 77978
ATTN: R. P. Smith, Vice-President/General Mgr.

NATIONAL POLLUTANT DISCHARGE ELIMINATION SYSTEM (NPDES)
DISCHARGE MONITORING REPORT (DMR)

TX0085570 — PERMIT NUMBER (2-16)
006 A — DISCHARGE NUMBER (17-19)

MAJOR
F-FINAL
200 FT. N ST HWY 35 AT CREEK
*** NO DISCHARGE ☐ ***

MONITORING PERIOD

	YEAR	MO	DAY		YEAR	MO	DAY
FROM	01	11	01	TO	01	11	30
	(20-21)	(22-23)	(24-25)		(26-27)	(28-29)	(30-31)

NOTE: Read instructions before completing this form.

PARAMETER (32-37)		(3 Card Only) (46-53) QUANTITY OR LOADING (54-61) AVERAGE	MAXIMUM	UNITS	(4 Card Only) (38-45) QUALITY OR CONCENTRATION (46-53) MINIMUM	(54-61) AVERAGE	MAXIMUM	UNITS	NO. EX (62-63)	FREQUENCY OF ANALYSIS (64-68)	SAMPLE TYPE (69-70)
PH 00400 1 0 0 EFFLUENT GROSS VALUE	SAMPLE MEASUREMENT	*******	******		7.6	*******	9.4	(12)	1	DAILY	GRAB
	PERMIT REQUIREMENT	*******	******	**** ****	6.0 MINIMUM	*******	9.0 MAXIMUM	SU		DAILY	GRAB
OIL & GREASE 00556 1 0 0 EFFLUENT GROSS VALUE	SAMPLE MEASUREMENT	*******	******		******	*******	4	(19)	0	DAILY	G[illegible]
	PERMIT REQUIREMENT	*******	******	**** ****	******	*******	15 DAILY MX	MG/L		DAILY	GRAB
CARBON, TOT ORGANIC (TOC) 00680 1 0 0 EFFLUENT GROSS VALUE	SAMPLE MEASUREMENT	*******	******		******	*******	10	(19)	0	DAILY	GRAB
	PERMIT REQUIREMENT	*******	******	**** ****	******	*******	55 DAILY MX	MG/L		DAILY	GRAB
	SAMPLE MEASUREMENT										
	PERMIT REQUIREMENT										
	SAMPLE MEASUREMENT										
	PERMIT REQUIREMENT										
	SAMPLE MEASUREMENT										
	PERMIT REQUIREMENT										
	SAMPLE MEASUREMENT										
	PERMIT REQUIREMENT										

NAME / TITLE PRINCIPAL EXECUTIVE OFFICER
R.P. Smith
Vice-President/General Mgr.
TYPED OR PRINTED

I certify under penalty of law that this document and all attachments were prepared under my direction or supervision in accordance with a system designed to assure that qualified personnel properly gather and evaluate the information submitted. Based on my inquiry of the person or persons who manage the system, or those persons directly responsible for gathering the information, the information submitted is, to the best of my knowledge and belief, true, accurate, and complete. I am aware that there are significant penalties for submitting false information, including the possibility of fine and imprisonment for knowing violations.

SIGNATURE OF PRINCIPAL EXECUTIVE OFFICER OR AUTHORIZED AGENT

TELEPHONE: 361 | 987-7000 (area code NUMBER)
DATE: 01 | 12 | 17 (YEAR | MO | DAY)

Forms by ChemSW(707)864-0845;p/n110900dmr;v3.20;1/1/98

COMMENT AND EXPLANATION OF ANY VIOLATIONS (Reference all attachments here)
WHEN DISCHARGING, INITIAL SAMPLE COLLECTED WITHIN 15 MINUTES AFTER A DISCHARGE BEGINS.
TPDES 02436

This is a 4-part form.

PERMITTEE NAME/ADDRESS: (Include Facility Name/Location if different)
NAME: FORMOSA PLASTICS CORP USA
ADDRESS: P.O. BOX 400
POINT COMFORT TX 77978

FACILITY: FORMOSA PLASTIC CORP USA

LOCATION: POINT COMFORT TX 77978
ATTN: R. P. Smith, Vice-President/General Mgr.

NATIONAL POLLUTANT DISCHARGE ELIMINATION SYSTEM (NPDES)
DISCHARGE MONITORING REPORT (DMR)

TX0085570 — PERMIT NUMBER (2-16)
TXA S — DISCHARGE NUMBER (17-19)

MAJOR
F-FINAL
1/6 MONTHS 24HR ACUTE TOXICITY

MONITORING PERIOD
FROM YEAR 01 | MO 11 | DAY 01 (20-21) (22-23) (24-25)
TO YEAR 01 | MO 11 | DAY 30 (26-27) (28-29) (30-31)

*** NO DISCHARGE ☐ ***

NOTE: Read instructions before completing this form.

PARAMETER (32-37)		QUANTITY OR LOADING AVERAGE	QUANTITY OR LOADING MAXIMUM	QUANTITY OR LOADING UNITS	QUANTITY OR CONCENTRATION MINIMUM	QUANTITY OR CONCENTRATION AVERAGE	QUANTITY OR CONCENTRATION MAXIMUM	QUANTITY OR CONCENTRATION UNITS	NO. EX	FREQUENCY OF ANALYSIS	SAMPLE TYPE
LC50/PF STAT 24 HR AC U MENIDIA TIE6B 1 0 0 EFFLUENT GROSS VALUE	SAMPLE MEASUREMENT	*******	******		******	0	*******	(9A)	0	ONCE/ 6MONTH	COMP24
	PERMIT REQUIREMENT	*******	******	**** ****	******	REPORT SINGSAMP	*******	PASS=0 FAIL=1		ONCE/ 6MONTH	COMP24
	SAMPLE MEASUREMENT										
	PERMIT REQUIREMENT										
	SAMPLE MEASUREMENT										
	PERMIT REQUIREMENT										
	SAMPLE MEASUREMENT										
	PERMIT REQUIREMENT										
	SAMPLE MEASUREMENT										
	PERMIT REQUIREMENT										
	SAMPLE MEASUREMENT										
	PERMIT REQUIREMENT										
	SAMPLE MEASUREMENT										
	PERMIT REQUIREMENT										

NAME / TITLE PRINCIPAL EXECUTIVE OFFICER
R.P. Smith
Vice-President/General Mgr.
TYPED OR PRINTED

I certify under penalty of law that this document and all attachments were prepared under my direction or supervision in accordance with a system designed to assure that qualified personnel properly gather and evaluate the information submitted. Based on my inquiry of the person or persons who manage the system, or those persons directly responsible for gathering the information, the information submitted is, to the best of my knowledge and belief, true, accurate, and complete. I am aware that there are significant penalties for submitting false information, including the possibility of fine and imprisonment for knowing violations.

SIGNATURE OF PRINCIPAL EXECUTIVE OFFICER OR AUTHORIZED AGENT

TELEPHONE: 361 | 987-7000 (area code NUMBER)

DATE: 01 | 12 | 17 (YEAR | MO | DAY)

COMMENT AND EXPLANATION OF ANY VIOLATIONS (Reference all attachments here)
(PASS=0 FAIL=1) REPORT PASS AS '0' REPORT FAIL AS '1' IN CONCENTRATION AVG. ABOVE.

Forms by ChemSW(707)864-0845;phn11090dmr;r5.20;1/1/94

NAME: FORMOSA PLASTICS CORP USA
ADDRESS: P.O. BOX 400
POINT COMFORT TX 77978

FACILITY: FORMOSA PLASTIC CORP USA

LOCATION: POINT COMFORT TX 77978
ATTN: R. P. Smith, Vice-President/General Mgr.

NATIONAL POLLUTANT DISCHARGE ELIMINATION SYSTEM (NPDES)
DISCHARGE MONITORING REPORT (DMR)

TX0085570
PERMIT NUMBER (2-16)

TX1 S
DISCHARGE NUMBER (17-19)

MAJOR
F-FINAL
1/6 MONTHS CHRONIC TOXICITY

MONITORING PERIOD
FROM YEAR 01 MO 12 DAY 02 (20-21) (22-23) (24-25)
TO YEAR 01 MO 12 DAY 31 (26-27) (28-29) (30-31)

*** NO DISCHARGE ☐ ***

NOTE: Read instructions before completing this form.

PARAMETER (32-37)		QUANTITY OR LOADING AVERAGE	QUANTITY OR LOADING MAXIMUM	UNITS	QUANTITY OR CONCENTRATION MINIMUM	QUANTITY OR CONCENTRATION AVERAGE	QUANTITY OR CONCENTRATION MAXIMUM	UNITS	NO. EX (42-43)	FREQUENCY OF ANALYSIS (44-48)	SAMPLE TYPE (49-70)
LF P/F LETH STATRE 7 DAY CHR MYSID. BAHIA TLP3E 1 0 0 EFFLUENT GROSS VALUE	SAMPLE MEASUREMENT	******	******	****	0	0	*******	(9A) PASS=0 FAIL=1	0	ONCE/ 6MONTH	COMPOS
	PERMIT REQUIREMENT	******	******	****	REPORT 7 DA MIN	REPORT MO AV MN	*******			ONCE/ 6MONTH	COMPOS
LF P/F LETH STATRE 7 DAY CHR MENIDIA TLP6B 1 0 0 EFFLUENT GROSS VALUE	SAMPLE MEASUREMENT	******	******	****	0	0	*******	(9A) PASS=0 FAIL=1	0	ONCE/ 6MONTH	COMPOS
	PERMIT REQUIREMENT	******	******	****	REPORT 7 DA MIN	REPORT MO AV MN	*******			ONCE/ 6MONTH	COMPOS
NOEL LETHAL STATRE 7 DAY CHR MYSID. BAHIA TOP3E 1 0 0 EFFLUENT GROSS VALUE	SAMPLE MEASUREMENT	******	******	****	13	0	*******	(23) PER-CENT	0	ONCE/ 6MONTH	COMPOS
	PERMIT REQUIREMENT	******	******	****	REPORT 7 DA MIN	REPORT MO AV MN	*******			ONCE/ 6MONTH	COMPOS
NOEL LETHAL STATRE 7 DAY CHR MENIDIA TOP6B 1 0 0 EFFLUENT GROSS VALUE	SAMPLE MEASUREMENT	******	******	****	13	0	*******	(23) PER-CENT	0	ONCE/ 6MONTH	COMPOS
	PERMIT REQUIREMENT	******	******	****	REPORT 7 DA MIN	REPORT MO AV MN	*******			ONCE/ 6MONTH	COMPOS
NOEL SUB-LETH STATRE 7 DAY CHR MYSID. BAHIA TPP3E 1 0 0 EFFLUENT GROSS VALUE	SAMPLE MEASUREMENT	******	******	****	13	0	*******	(23) PER-CENT	0	ONCE/ 6MONTH	COMPOS
	PERMIT REQUIREMENT	******	******	****	REPORT 7 DA MIN	REPORT MO AV MN	*******			ONCE/ 6MONTH	COMPOS
NOEL SUB-LETH STATRE 7 DAY CHR MENIDIA TPP6B 1 0 0 EFFLUENT GROSS VALUE	SAMPLE MEASUREMENT	******	******	****	13	0	*******	(23) PER-CENT	0	ONCE/ 6MONTH	COMPOS
	PERMIT REQUIREMENT	******	******	****	REPORT 7 DA MIN	REPORT MO AV MN	*******			ONCE/ 6MONTH	COMPOS
WHOLE EFFLUENT TOXICITY 22414 1 0 0 EFFLUENT GROSS VALUE	SAMPLE MEASUREMENT	******	******	****	84	84	*******	(23) PER-CENT	0	ONCE/ 6MONTH	COMPOS
	PERMIT REQUIREMENT	******	******	****	REPORT 7 DA MIN	REPORT MO AV MN	*******			ONCE/ 6MONTH	COMPOS

NAME / TITLE PRINCIPAL EXECUTIVE OFFICER
R.P. Smith
Vice-President/General Mgr.
TYPED OR PRINTED

I certify under penalty of law that this document and all attachments were prepared under my direction or supervision in accordance with a system designed to assure that qualified personnel properly gather and evaluate the information submitted. Based on my inquiry of the person or persons who manage the system, or those persons directly responsible for gathering the information, the information submitted is, to the best of my knowledge and belief, true, accurate, and complete. I am aware that there are significant penalties for submitting false information, including the possibility of fine and imprisonment for knowing violations.

SIGNATURE OF PRINCIPAL EXECUTIVE OFFICER OR AUTHORIZED AGENT

TELEPHONE: area code 361 NUMBER 987-7000
DATE: YEAR 02 MO 01 DAY 16

COMMENT AND EXPLANATION OF ANY VIOLATIONS
(PASS=0 FAIL=1) REPORT PASS AS '0' REPORT FAIL AS '1' IN CONCENTRATION AVG. ABOVE.
(Reference all attachments here)

Forms by ChemSW (707) 894-9643; phi 1180 Sonoma; v4.26; V1/98

NAME: FORMOSA PLASTICS CORP USA
ADDRESS: P.O. BOX 400
POINT COMFORT TX 77978

FACILITY: FORMOSA PLASTIC CORP USA

LOCATION: POINT COMFORT TX 77978
ATTN: R. P. Smith, Vice-President/General Mgr.

NATIONAL POLLUTANT DISCHARGE ELIMINATION SYSTEM (NPDES)
DISCHARGE MONITORING REPORT (DMR)

TX0085570
PERMIT NUMBER (2-16)

TXA S
DISCHARGE NUMBER (17-19)

MAJOR
F-FINAL
1/6 MONTHS 24HR ACUTE TOXICITY

MONITORING PERIOD
FROM YEAR 01 MO 12 DAY 02 (20-21) (22-23) (24-25)
TO YEAR 01 MO 12 DAY 31 (26-27) (28-29) (30-31)

*** NO DISCHARGE ☐ ***

NOTE: Read instructions before completing this form.

PARAMETER (32-37)		QUANTITY OR LOADING AVERAGE	QUANTITY OR LOADING MAXIMUM	UNITS	QUANTITY OR CONCENTRATION MINIMUM	QUANTITY OR CONCENTRATION AVERAGE	QUANTITY OR CONCENTRATION MAXIMUM	UNITS	NO. EX	FREQUENCY OF ANALYSIS	SAMPLE TYPE
LC50/PF STAT 24 HR AC U MENIDIA TIE6B 1 0 0 EFFLUENT GROSS VALUE	SAMPLE MEASUREMENT	*******	******		******	0	*******	(9A)	0	ONCE/ 6MONTH	COMP24
	PERMIT REQUIREMENT	*******	******	**** ****	******	REPORT SINGSAMP	*******	PASS=0 FAIL=1		ONCE/ 6MONTH	COMP24
	SAMPLE MEASUREMENT										
	PERMIT REQUIREMENT										
	SAMPLE MEASUREMENT										
	PERMIT REQUIREMENT										
	SAMPLE MEASUREMENT										
	PERMIT REQUIREMENT										
	SAMPLE MEASUREMENT										
	PERMIT REQUIREMENT										
	SAMPLE MEASUREMENT										
	PERMIT REQUIREMENT										
	SAMPLE MEASUREMENT										
	PERMIT REQUIREMENT										

NAME / TITLE PRINCIPAL EXECUTIVE OFFICER
R.P. Smith
Vice-President/General Mgr.
TYPED OR PRINTED

I certify under penalty of law that this document and all attachments were prepared under my direction or supervision in accordance with a system designed to assure that qualified personnel properly gather and evaluate the information submitted. Based on my inquiry of the person or persons who manage the system, or those persons directly responsible for gathering the information, the information submitted is, to the best of my knowledge and belief, true, accurate, and complete. I am aware that there are significant penalties for submitting false information, including the possibility of fine and imprisonment for knowing violations.

SIGNATURE OF PRINCIPAL EXECUTIVE OFFICER OR AUTHORIZED AGENT

TELEPHONE: 361| 987-7000 (area code NUMBER)

DATE: 02 | 01 | 16 (YEAR | MO | DAY)

COMMENT AND EXPLANATION OF ANY VIOLATIONS (Reference all attachments here)
(PASS=0 FAIL=1) REPORT PASS AS '0' REPORT FAIL AS '1' IN CONCENTRATION AVG. ABOVE.

NAME/ADDRESS: (Include Facility Name/Location if different)

NAME: FORMOSA PLASTICS CORP., TEXAS

ADDRESS: P.O. BOX 700
POINT COMFORT, TX 77978

FACILITY: FORMOSA PLASTIC CORP USA

LOCATION: POINT COMFORT TX 77978

ATTN: R. P. Smith, Vice-President/General Mgr.

NATIONAL POLLUTANT DISCHARGE ELIMINATION SYSTEM (NPDES)
DISCHARGE MONITORING REPORT (DMR)

PERMIT NUMBER: TX 0085570 (2-16)

DISCHARGE NUMBER: TX1 Q (17-19)

MAJOR

F-FINAL

QUARTERLY REPORTING - 001

MONITORING PERIOD

FROM YEAR 01 MO 09 DAY 01 (20-21) (22-23) (24-25) TO YEAR 01 MO 12 DAY 31 (26-27) (28-29) (30-31)

*** NO DISCHARGE [ ] ***

NOTE: Read instructions before completing this form.

PARAMETER (32-37)		QUANTITY OR LOADING (3 Card Only) (46-53) AVERAGE	MAXIMUM	UNITS (54-61)	QUALITY OR CONCENTRATION (4 Card Only) (38-45) MINIMUM	AVERAGE (46-53)	MAXIMUM (54-61)	UNITS	NO. EX (62-63)	FREQUENCY OF ANALYSIS (64-68)	SAMPLE TYPE (69-70)
WHOLE EFFLUENT TOXICITY 22414 1 0 1 EFFLUENT GROSS VALUE	SAMPLE MEASUREMENT	******	******	****	> 100	> 100	******	(23) PER-CENT	0	QTRLY	COMP24
	PERMIT REQUIREMENT	******	******	****	REPORT 24-HR	REPORT MO AV MN	******			QTRLY	COMP24
WHOLE EFFLUENT TOXICITY 22414 1 0 1 EFFLUENT GROSS VALUE	SAMPLE MEASUREMENT	******	******	****	> 100	> 100	******	(23) PER-CENT	0	QTRLY	COMP24
	PERMIT REQUIREMENT	******	******	****	REPORT 24-HR	REPORT MO AV MN	******			QTRLY	COMP24
WHOLE EFFLUENT TOXICITY 22414 1 0 1 EFFLUENT GROSS VALUE	SAMPLE MEASUREMENT	******	******	****	> 100	> 100	******	(23) PER-CENT	0	QTRLY	COMP24
	PERMIT REQUIREMENT	******	******	****	REPORT 24-HR	REPORT MO AV MN	******			QTRLY	COMP24
	SAMPLE MEASUREMENT										
	PERMIT REQUIREMENT										
	SAMPLE MEASUREMENT										
	PERMIT REQUIREMENT										
	SAMPLE MEASUREMENT										
	PERMIT REQUIREMENT										
	SAMPLE MEASUREMENT										
	PERMIT REQUIREMENT										

NAME / TITLE PRINCIPAL EXECUTIVE OFFICER

R.P. Smith

Vice-President/General Mgr.

TYPED OR PRINTED

I certify under penalty of law that this document and all attachments were prepared under my direction or supervision in accordance with a system designed to assure that qualified personnel properly gather and evaluate the information submitted. Based on my inquiry of the person or persons who manage the system, or those persons directly responsible for gathering the information, the information submitted is, to the best of my knowledge and belief, true, accurate, and complete. I am aware that there are significant penalties for submitting false information, including the possibility of fine and imprisonment for knowing violations.

SIGNATURE OF PRINCIPAL EXECUTIVE OFFICER OR AUTHORIZED AGENT

TELEPHONE: area code 361 NUMBER 987-7000

DATE: YEAR 02 MO 01 DAY 15

COMMENT AND EXPLANATION OF ANY VIOLATIONS

(Reference all attachments here)

TPDES PERMIT 02436

This is a 4-part form.

PERMITTEE NAME/ADDRESS: (Include Facility Name/Location if different)

NAME: FORMOSA PLASTICS CORP., TEXAS

ADDRESS: P.O. BOX 700
POINT COMFORT, TX 77978

FACILITY: FORMOSA PLASTIC CORP USA

LOCATION: POINT COMFORT TX 77978

ATTN: R. P. Smith, Vice-President/General Mgr.

NATIONAL POLLUTANT DISCHARGE ELIMINATION SYSTEM (NPDES)

DISCHARGE MONITORING REPORT (DMR)

TX 0085570	TXA Q
PERMIT NUMBER (2-18)	DISCHARGE NUMBER (17-19)

MONITORING PERIOD

	YEAR	MO	DAY		YEAR	MO	DAY
FROM	01	09	01	TO	01	12	31
	(20-21)	(22-23)	(24-25)		(26-27)	(28-29)	(30-31)

MAJOR

F-FINAL

QUARTERLY 24-HR ACUTE TOXICITY

*** NO DISCHARGE ☐ ***

NOTE: Read Instructions before completing this form.

PARAMETER (32-37)		(3 Card Only) (46-53) QUANTITY OR LOADING (54-61) AVERAGE	MAXIMUM	UNITS	(4 Card Only) (38-45) QUALITY OR CONCENTRATION (46-53) MINIMUM	AVERAGE	(54-61) MAXIMUM	UNITS	NO. EX (42-43)	FREQUENCY OF ANALYSIS (64-68)	SAMPLE TYPE (69-70)
LC50/PF STAT 24HR AC U MYSID. BAHIA TIE3E 1 0 0 EFFLUENT GROSS VALUE	SAMPLE MEASUREMENT	******	******		******	0	******	(9A)	0	QTRLY	COMP24
	PERMIT REQUIREMENT	******	******	**** ****	******	REPORT SINGSAMP	******	PASS=0 FAIL=1		QTRLY	COMP24
	SAMPLE MEASUREMENT										
	PERMIT REQUIREMENT										
	SAMPLE MEASUREMENT										
	PERMIT REQUIREMENT										
	SAMPLE MEASUREMENT										
	PERMIT REQUIREMENT										
	SAMPLE MEASUREMENT										
	PERMIT REQUIREMENT										
	SAMPLE MEASUREMENT										
	PERMIT REQUIREMENT										
	SAMPLE MEASUREMENT										
	PERMIT REQUIREMENT										

NAME / TITLE PRINCIPAL EXECUTIVE OFFICER			TELEPHONE	DATE
R.P. Smith Vice-President/General Mgr. TYPED OR PRINTED	I certify under penalty of law that this document and all attachments were prepared under my direction or supervision in accordance with a system designed to assure that qualified personnel properly gather and evaluate the information submitted. Based [illegible] persons who manage the system, or those persons directly responsible for gathering the information, the information submitted is, to the best of my knowledge and belief, true, accurate, and complete. I am aware that there are significant penalties for submitting false information, including the possibility of fine and imprisonment for knowing violations.	SIGNATURE OF PRINCIPAL EXECUTIVE OFFICER OR AUTHORIZED AGENT	361| 987-7000 area code NUMBER	02 | 01 | 15 YEAR | MO | DAY

COMMENT AND EXPLANATION OF ANY VIOLATIONS (Reference all attachments here)

(PASS=0 FAIL=1) REPORT PASS AS '0' OR REPORT FAIL AS '1' IN CONCENTRATION AVG. ABOVE.

TPDES PERMIT 02436

Forms by ChemSW(707)864-0845;prh11060dmr;v3.20;1/1/96

This is a 4-part form.

CWA-Appendix G

EPA/FOIA2018-00187

VP0614

Dauer.

ISO-9002 CERTIFIED
ISO-14001 CERTIFIED

P. O. BOX 700
201 FORMOSA DRIVE
POINT COMFORT, TEXAS 77978

PHONE: 361/987-7000
FAX: 361/987-2363

EPCW-25
rec'd 2/12/04

FILE

January 17, 2003

Certified Mail
7001-2510-0008-0641-3306

Ms. Debra Berry
U.S. Environmental Protection Agency
Compliance Assurance & Enforcement Division
Water Enforcement Branch (6 EN-WC)
1445 Ross Avenue
Dallas, TX 75202-2733

RE: TPDES Permit No. 02436
EPA ID No. TX0085570
Addendum to December 2002
Discharge Monitoring Reports

Dear Ms. Berry:

Enclosed are the Discharge Monitoring Reports for the month of December 2002. For the month of December 2002, there was no discharge exceedance reported on the DMR.

Should you require additional information or assistance, please contact Monique Wells, at (361) 987-7463. b&7(c)

Sincerely,

R. P. Smith
Vice President/General Manager
Formosa Plastics Corporation, Texas

Enclosure

PERMITTEE NAME/ADDRESS: (Include Facility Name/Location if different)

NAME: FORMOSA PLASTICS CORP USA

ADDRESS: P.O. BOX 400

POINT COMFORT TX 77978

FACILITY: FORMOSA PLASTIC CORP USA

LOCATION: POINT COMFORT TX 77978

ATTN: R. P. Smith, Vice-President/General Mgr.

NATIONAL POLLUTANT DISCHARGE ELIMINATION SYSTEM (NPDES)

DISCHARGE MONITORING REPORT (DMR)

TX0085570	001 A
PERMIT NUMBER (2-16)	DISCHARGE NUMBER (17-19)

MAJOR

F-FINAL

REMEDIATED GROUNDWATER AND

COMBINED INTERNAL W/W STREAMS

*** NO DISCHARGE [ ] ***

MONITORING PERIOD

	YEAR	MO	DAY		YEAR	MO	DAY
FROM	02	12	01	TO	02	12	31
	(20-21)	(22-23)	(24-25)		(26-27)	(28-29)	(30-31)

NOTE: Read instructions before completing this form.

PARAMETER (32-37)		(3 Card Only) (46-53) QUANTITY OR LOADING (54-61) AVERAGE	MAXIMUM	UNITS	(4 Card Only) (38-45) QUALITY OR CONCENTRATION (46-53) MINIMUM	AVERAGE	(54-61) MAXIMUM	UNITS	NO. EX (42-43)	FREQUENCY OF ANALYSIS (64-68)	SAMPLE TYPE (69-70)
TEMPERATURE, WATER DEG. FAHRENHEIT 00011 1 0 0 EFFLUENT GROSS VALUE	SAMPLE MEASUREMENT	*******	******	****	******	******	87	(15)	0	CONTINUOUS	RCORDR
	PERMIT REQUIREMENT	*******	******	****	******	******	95 DAILY MX	DEG.F		CONTINUOUS	RCORDR
OXYGEN, DISSOLVED (DO) 00300 1 0 0 EFFLUENT GROSS VALUE	SAMPLE MEASUREMENT	*******	******	****	7.3	*******	8.2	(19)	0	TWICE/WEEK	GRAB
	PERMIT REQUIREMENT	*******	******	****	2.0 MO MIN	******	REPORT DAILY MX	MG/L		TWICE/WEEK	GRAB
OXYGEN DEMAND, CHEM. (HIGH LEVEL) (COD) 00340 1 0 0 EFFLUENT GROSS VALUE	SAMPLE MEASUREMENT	2652	3904	(26)	******	46	61	(19)	0	THREE/WEEK	COMPOS
	PERMIT REQUIREMENT	9000 DAILY AV	16000 DAILY MX	LBS/DY	******	200 DAILY AV	300 DAILY MX	MG/L		THREE/WEEK	COMPOS
PH 00400 1 0 0 EFFLUENT GROSS VALUE	SAMPLE MEASUREMENT	*******	*******	****	6.6	******	7.5	(12)	0	CONTINUOUS	RCORDR
	PERMIT REQUIREMENT	*******	******	****	5.0 MINIMUM	******	11.0 MAXIMUM	SU		CONTINUOUS	RCORDR
SOLIDS, TOTAL SUSPENDED (TSS) 00530 1 0 0 EFFLUENT GROSS VALUE	SAMPLE MEASUREMENT	677	1158	(26)	******	12	18	(19)	0	THREE/WEEK	COMPOS
	PERMIT REQUIREMENT	3110 DAILY AV	6476 DAILY MX	LBS/DY	******	40 DAILY AV	80 DAILY MX	MG/L		THREE/WEEK	COMPOS
OIL & GREASE 00556 1 0 0 EFFLUENT GROSS VALUE	SAMPLE MEASUREMENT	150	209	(26)	******	******	4	(19)	0	TWICE/WEEK	GRAB
	PERMIT REQUIREMENT	424 DAILY AV	460 DAILY MX	LBS/DY	******	******	15 DAILY MX	MG/L		TWICE/WEEK	GRAB
NITROGEN, AMMONIA TOTAL (AS N) 00610 1 0 0 EFFLUENT GROSS VALUE	SAMPLE MEASUREMENT	10	39	(26)	******	0	1	(19)	0	THREE/WEEK	COMPOS
	PERMIT REQUIREMENT	243 DAILY AV	405 DAILY MX	LBS/DY	******	3 DAILY AV	5 DAILY MX	MG/L		THREE/WEEK	COMPOS

NAME / TITLE PRINCIPAL EXECUTIVE OFFICER			TELEPHONE	DATE
R.P. Smith Vice-President/General Mgr. TYPED OR PRINTED	I certify under penalty of law that this document and all attachments were prepared under my direction or supervision in accordance with a system designed to assure that qualified personnel properly gather and evaluate the information submitted. Based on my inquiry of the person or persons who manage the system, or those persons directly responsible for gathering the information, the information submitted is, to the best of my knowledge and belief, true, accurate, and complete. I am aware that there are significant penalties for submitting false information, including the possibility of fine and imprisonment for knowing violations.	SIGNATURE OF PRINCIPAL EXECUTIVE OFFICER OR AUTHORIZED AGENT	361 | 987-7000 area code NUMBER	03 | 01 | 14 YEAR | MO | DAY

COMMENT AND EXPLANATION OF ANY VIOLATIONS (Reference all attachments here)

TPDES 02436

Forms by ChemGW(707)864-0845;phs110900dmr.v5.20;1/1/94

PERMITTEE NAME/ADDRESS: (Include Facility Name/Location if different)
NAME: FORMOSA PLASTICS CORP USA
ADDRESS: P.O. BOX 400
POINT COMFORT TX 77978

FACILITY: FORMOSA PLASTIC CORP USA

LOCATION: POINT COMFORT TX 77978
ATTN: R. P. Smith, Vice-President/General Mgr.

NATIONAL POLLUTANT DISCHARGE ELIMINATION SYSTEM (NPDES)
DISCHARGE MONITORING REPORT (DMR)

TX0085570 — PERMIT NUMBER (2-16)
001 A — DISCHARGE NUMBER (17-19)

MAJOR
F-FINAL
REMEDIATED GROUNDWATER AND
COMBINED INTERNAL W/W STREAMS
*** NO DISCHARGE [ ] ***

MONITORING PERIOD

	YEAR	MO	DAY		YEAR	MO	DAY
FROM	02	12	01	TO	02	12	31
	(20-21)	(22-23)	(24-25)		(26-27)	(28-29)	(30-31)

NOTE: Read instructions before completing this form.

PARAMETER (32-37)		(3 Card Only) (46-53) QUANTITY OR LOADING (54-61) AVERAGE	MAXIMUM	UNITS	(4 Card Only) (38-45) QUALITY OR CONCENTRATION (46-53) MINIMUM	AVERAGE	MAXIMUM	UNITS	NO. EX (62-63)	FREQUENCY OF ANALYSIS (64-68)	SAMPLE TYPE (69-70)
CARBON, TOT ORGANIC (TOC) 00680 1 0 0 EFFLUENT GROSS VALUE	SAMPLE MEASUREMENT	902	987	(26)	******	*******	******		0	TWICE/ WEEK	COMPOS
	PERMIT REQUIREMENT	5939 DAILY AV	8484 DAILY MX	LBS/DY	******	*******	******	****		TWICE/ WEEK	COMPOS
CHROMIUM, HEXAVALENT (AS CR) 01032 1 0 0 EFFLUENT GROSS VALUE	SAMPLE MEASUREMENT	0.0	0.0	(26)	******	0.00	0.00	(19)	0	THREE/ WEEK	COMPOS
	PERMIT REQUIREMENT	3.7 DAILY AV	7.3 DAILY MX	LBS/DY	******	REPORT DAILY AV	REPORT DAILY MX	MG/L		THREE/ WEEK	COMPOS
CHROMIUM, TOTAL (AS CR) 01034 1 0 0 EFFLUENT GROSS VALUE	SAMPLE MEASUREMENT	0.0	0.0	(26)	******	0.00	0.00	(19)	0	THREE/ WEEK	COMPOS
	PERMIT REQUIREMENT	3.7 DAILY AV	7.3 DAILY MX	LBS/DY	******	REPORT DAILY AV	REPORT DAILY MX	MG/L		THREE/ WEEK	COMPOS
COPPER, TOTAL (AS CU) 01042 1 0 0 EFFLUENT GROSS VALUE	SAMPLE MEASUREMENT	0.81	1.90	(26)	******	0.01	0.04	(19)	0	THREE/ WEEK	COMPOS
	PERMIT REQUIREMENT	1.75 DAILY AV	3.70 DAILY MX	LBS/DY	******	REPORT DAILY AV	REPORT DAILY MX	MG/L		THREE/ WEEK	COMPOS
LEAD, TOTAL (AS PB) 01051 1 0 0 EFFLUENT GROSS VALUE	SAMPLE MEASUREMENT	0.1	0.4	(26)	******	0.00	0.01	(19)	0	THREE/ WEEK	COMPOS
	PERMIT REQUIREMENT	6.5 DAILY AV	16.0 DAILY MX	LBS/DY	******	REPORT DAILY AV	REPORT DAILY MX	MG/L		THREE/ WEEK	COMPOS
ZINC, TOTAL (AS ZN) 01092 1 0 0 EFFLUENT GROSS VALUE	SAMPLE MEASUREMENT	1.0	2.6	(26)	******	0.02	0.04	(19)	0	TWICE/ WEEK	COMPOS
	PERMIT REQUIREMENT	2.8 DAILY AV	5.5 DAILY MX	LBS/DY	******	REPORT DAILY AV	REPORT DAILY MX	MG/L		2/WEEK	COMPOS
TOLUENE 34010 1 0 0 EFFLUENT GROSS VALUE	SAMPLE MEASUREMENT	0.00	0.00	(26)	******	0.00	0.00	(19)	0	TWICE/ WEEK	COMPOS
	PERMIT REQUIREMENT	0.74 DAILY AV	2.26 DAILY MX	LBS/DY	******	REPORT DAILY AV	REPORT DAILY MX	MG/L		TWICE/ WEEK	COMPOS

NAME / TITLE PRINCIPAL EXECUTIVE OFFICER
R.P. Smith
Vice-President/General Mgr.
TYPED OR PRINTED

I certify under penalty of law that this document and all attachments were prepared under my direction or supervision in accordance with a system designed to assure that qualified personnel properly gather and evaluate the information submitted. Based on my inquiry of the person or persons who manage the system, or those persons directly responsible for gathering the information, the information submitted is, to the best of my knowledge and belief, true, accurate, and complete. I am aware that there are significant penalties for submitting false information, including the possibility of fine and imprisonment for knowing violations.

SIGNATURE OF PRINCIPAL EXECUTIVE OFFICER OR AUTHORIZED AGENT

TELEPHONE: 361 | 987-7000 (area code NUMBER)
DATE: 03 | 01 | 14 (YEAR | MO | DAY)

COMMENT AND EXPLANATION OF ANY VIOLATIONS
(Reference all attachments here)

TPDES 02436

Forms by ChemSW(707)664-0846:pm11090dmr;v3.20;1/1/98

CWA-Appendix G

PERMITTEE NAME/ADDRESS: (Include Facility Name/Location if different)

NAME: FORMOSA PLASTICS CORP USA

ADDRESS: P.O. BOX 400

POINT COMFORT TX 77978

FACILITY: FORMOSA PLASTIC CORP USA

LOCATION: POINT COMFORT TX 77978

ATTN: R. P. Smith, Vice-President/General Mgr.

NATIONAL POLLUTANT DISCHARGE ELIMINATION SYSTEM (NPDES)

DISCHARGE MONITORING REPORT (DMR)

TX0085570	001 A
PERMIT NUMBER (2-16)	DISCHARGE NUMBER (17-19)

MONITORING PERIOD

	YEAR	MO	DAY		YEAR	MO	DAY
FROM	02	12	01	TO	02	12	31
	(20-21)	(22-23)	(24-25)		(26-27)	(28-29)	(30-31)

MAJOR

F-FINAL

REMEDIATED GROUNDWATER AND

COMBINED INTERNAL W/W STREAMS

*** NO DISCHARGE [ ] ***

NOTE: Read instructions before completing this form.

PARAMETER (32-37)		(3 Card Only) (46-53) QUANTITY OR LOADING (54-61) AVERAGE	MAXIMUM	UNITS	(4 Card Only) (38-45) QUALITY OR CONCENTRATION (46-53) MINIMUM	AVERAGE	MAXIMUM	UNITS	NO. EX (62-63)	FREQUENCY OF ANALYSIS (64-68)	SAMPLE TYPE (69-70)
BENZENE	SAMPLE MEASUREMENT	0.00	0.00	(26)	******	0.00	0.00	(19)	0	TWICE/ WEEK	COMPOS
34030 1 0 0 EFFLUENT GROSS VALUE	PERMIT REQUIREMENT	1.05 DAILY AV	3.85 DAILY MX	LBS/DY	******	REPORT DAILY AV	REPORT DAILY MX	MG/L		TWICE/ WEEK	COMPOS
1,2-DICHLOROETHANE TOTAL WEIGHT	SAMPLE MEASUREMENT	0.10	0.58	(26)	******	0.00	0.01	(19)	0	TWICE/ WEEK	CO JS
34531 1 0 0 EFFLUENT GROSS VALUE	PERMIT REQUIREMENT	1.92 DAILY AV	5.97 DAILY MX	LBS/DY	******	REPORT DAILY AV	REPORT DAILY MX	MG/L		TWICE/ WEEK	COMPOS
PHENOL, SINGLE COMPOUND	SAMPLE MEASUREMENT	0.00	0.00	(26)	******	0.00	0.00	(19)	0	TWICE/ WEEK	COMPOS
34694 1 0 0 EFFLUENT GROSS VALUE	PERMIT REQUIREMENT	0.42 DAILY AV	0.74 DAILY MX	LBS/DY	******	REPORT DAILY AV	REPORT DAILY MX	MG/L		TWICE/ WEEK	COMPOS
VINYL CHLORIDE	SAMPLE MEASUREMENT	0.00	0.00	(26)	******	0.00	0.00	(19)	0	TWICE/ WEEK	COMPOS
39175 1 0 0 EFFLUENT GROSS VALUE	PERMIT REQUIREMENT	2.94 DAILY AV	7.58 DAILY MX	LBS/DY	******	REPORT DAILY AV	REPORT DAILY MX	MG/L		TWICE/ WEEK	COMPOS
TRICHLOROETHYLENE	SAMPLE MEASUREMENT	0.00	0.00	(26)	******	0.00	0.00	(19)	0	TWICE/ WEEK	COMPOS
39180 1 0 0 EFFLUENT GROSS VALUE	PERMIT REQUIREMENT	0.59 DAILY AV	1.53 DAILY MX	LBS/DY	******	REPORT DAILY AV	REPORT DAILY MX	MG/L		TWICE/ WEEK	COMPOS
FLOW, IN CONDUIT OR THRU TREATMENT PLANT	SAMPLE MEASUREMENT	6.6	7.9	(03)	******	******	******	****	0	CONTIN UOUS	RC OR
50050 1 0 0 EFFLUENT GROSS VALUE	PERMIT REQUIREMENT	9.7 DAILY AV	15.1 DAILY MX	MGD	******	******	******	****		CONTIN UOUS	RCORDR
MERCURY, TOTAL (AS HG)	SAMPLE MEASUREMENT	0.00	0.00	(26)	******	0.00	0.00	(19)	0	THREE/ WEEK	COMPOS
71900 1 0 0 EFFLUENT GROSS VALUE	PERMIT REQUIREMENT	0.03 DAILY AV	0.06 DAILY MX	LBS/DY	******	REPORT DAILY AV	REPORT DAILY MX	MG/L		THREE/ WEEK	COMPOS

NAME / TITLE PRINCIPAL EXECUTIVE OFFICER			TELEPHONE	DATE
R.P. Smith Vice-President/General Mgr.	I certify under penalty of law that this document and all attachments were prepared under my direction or supervision in accordance with a system designed to assure that qualified personnel properly gather and evaluate the information submitted. Based on my inquiry of the person or persons who manage the system, or those persons directly responsible for gathering the information, the information submitted is, to the best of my knowledge and belief, true, accurate, and complete. I am aware that there are significant penalties for submitting false information, including the possibility of fine and imprisonment for knowing violations.	SIGNATURE OF PRINCIPAL EXECUTIVE OFFICER OR AUTHORIZED AGENT	area code NUMBER 361 987-7000	YEAR | MO | DAY 03 | 01 | 14
TYPED OR PRINTED				

Forms by ChemSW (707) 984-0643; pm11090dmr; v5.20; 1/1/94

COMMENT AND EXPLANATION OF ANY VIOLATIONS (Reference all attachments here)

TPDES 02436

This is a 4-part form.

CWA-Appendix G

EPA/FOIA2018-00191

VP0614

PERMITTEE NAME/ADDRESS: (Include Facility Name/Location if different)
NAME: FORMOSA PLASTICS CORP USA
ADDRESS: P.O. BOX 400
POINT COMFORT TX 77978
FACILITY: FORMOSA PLASTIC CORP USA
LOCATION: POINT COMFORT TX 77978
ATTN: R. P. Smith, Vice-President/General Mgr.

NATIONAL POLLUTANT DISCHARGE ELIMINATION SYSTEM (NPDES)
DISCHARGE MONITORING REPORT (DMR)

PERMIT NUMBER (2-16)	DISCHARGE NUMBER (17-19)
TX0085570	001 A

MONITORING PERIOD

	YEAR	MO	DAY		YEAR	MO	DAY
FROM	02	12	01	TO	02	12	31
	(20-21)	(22-23)	(24-25)		(26-27)	(28-29)	(30-31)

MAJOR
F-FINAL
REMEDIATED GROUNDWATER AND
COMBINED INTERNAL W/W STREAMS
*** NO DISCHARGE ☐ ***

NOTE: Read instructions before completing this form.

PARAMETER (32-37)		(3 Card Only) (46-53) QUANTITY OR LOADING (54-61) AVERAGE	MAXIMUM	UNITS	(4 Card Only) (38-45) QUALITY OR CONCENTRATION (46-53) MINIMUM	AVERAGE	MAXIMUM	UNITS	NO. EX (62-65)	FREQUENCY OF ANALYSIS (54-68)	SAMPLE TYPE (69-70)
COLIFORM, FECAL GENERAL 74055 1 0 0 EFFLUENT GROSS VALUE	SAMPLE MEASUREMENT	******	*******	****	******	11	******	(13)	0	WEEKLY	GRAB
	PERMIT REQUIREMENT	******	*******	****	******	140 30DA GM	******	/100ML		WEEKLY	GRAB
BOD, CARBONACEOUS 05 DAY, 20C 80082 1 0 0 EFFLUENT GROSS VALUE	SAMPLE MEASUREMENT	181	668	(26)	******	3	10	(19)	0	THREE/ WEEK	CO. JS
	PERMIT REQUIREMENT	1102 DAILY AV	2727 DAILY MX	LBS/DY	******	14 DAILY AV	34 DAILY MX	MG/L		THREE/ WEEK	COMPOS
PH RANGE EXCURSIONS, > 60 MINUTES 82581 1 0 0 EFFLUENT GROSS VALUE	SAMPLE MEASUREMENT	******	0	(93)	******	******	******		0		
	PERMIT REQUIREMENT	******	0 MO TOTAL	OCCUR/ MONTH	******	******	******	**** ****		CONTIN UOUS	RCORDR
PH RANGE EXCURSIONS, MONTHLY TOTAL ACCUM 82582 1 0 0 EFFLUENT GROSS VALUE	SAMPLE MEASUREMENT	******	0	(14)	******	******	******		0		
	PERMIT REQUIREMENT	******	446 MO TOTAL	MIN-UTES	******	******	******	**** ****		CONTIN UOUS	RCORDR
	SAMPLE MEASUREMENT										
	PERMIT REQUIREMENT										
	SAMPLE MEASUREMENT										
	PERMIT REQUIREMENT										
	SAMPLE MEASUREMENT										
	PERMIT REQUIREMENT										

NAME / TITLE PRINCIPAL EXECUTIVE OFFICER
R.P. Smith
Vice-President/General Mgr.
TYPED OR PRINTED

I certify under penalty of law that this document and all attachments were prepared under my direction or supervision in accordance with a system designed to assure that qualified personnel properly gather and evaluate the information submitted. Based on my inquiry of the person or persons who manage the system, or those persons directly responsible for gathering the information, the information submitted is, to the best of my knowledge and belief, true, accurate, and complete. I am aware that there are significant penalties for submitting false information, including the possibility of fine and imprisonment for knowing violations.

SIGNATURE OF PRINCIPAL EXECUTIVE OFFICER OR AUTHORIZED AGENT

TELEPHONE: 361 | 987-7000 (area code NUMBER)
DATE: 03 | 01 | 14 (YEAR | MO | DAY)

COMMENT AND EXPLANATION OF ANY VIOLATIONS
(Reference all attachments here)

TPDES 02436

Forms by ChemSW(707)864-0845;pm11080dmr;v6.20;1/U98

This is a 4-part form.

CWA-Appendix G
EPA/FOIA2018-00192
VP0614

PERMITTEE NAME/ADDRESS: (Include Facility Name/Location if different)

NAME: FORMOSA PLASTICS CORP USA

ADDRESS: P.O. BOX 400

POINT COMFORT TX 77978

FACILITY: FORMOSA PLASTIC CORP USA

LOCATION: POINT COMFORT TX 77978

ATTN: R. P. Smith, Vice-President/General Mgr.

NATIONAL POLLUTANT DISCHARGE ELIMINATION SYSTEM (NPDES)

DISCHARGE MONITORING REPORT (DMR)

TX0085570	101 A
PERMIT NUMBER (2-16)	DISCHARGE NUMBER (17-19)

MONITORING PERIOD

	YEAR	MO	DAY		YEAR	MO	DAY
FROM	02	12	01	TO	02	12	31
	(20-21)	(22-23)	(24-25)		(26-27)	(28-29)	(30-31)

MAJOR

F-FINAL

TREATED PROCESS WASTEWATER

*** NO DISCHARGE [ ] ***

NOTE: Read instructions before completing this form.

PARAMETER (32-37)		(3 Card Only) (46-53) QUANTITY OR LOADING (54-61) AVERAGE	MAXIMUM	UNITS	(4 Card Only) (38-45) QUALITY OR CONCENTRATION (46-53) MINIMUM	AVERAGE	MAXIMUM	UNITS	NO. EX (62-63)	FREQUENCY OF ANALYSIS (64-68)	SAMPLE TYPE (69-70)
BOD, (5-DAY) (20 DEG. C) 00310 J 0 0 INTMD TRT, PRCS CMPLT	SAMPLE MEASUREMENT	8	72	(26)	******	0	2	(19)	0	TWICE/ WEEK	COMPOS
	PERMIT REQUIREMENT	731 DAILY AV	1959 DAILY MX	LBS/DY	******	REPORT DAILY AV	REPORT DAILY MX	MG/L		TWICE/ WEEK	COMPOS
OXYGEN DEMAND, CHEM. (HIGH LEVEL) (COD) 00340 J 0 0 INTMD TRT, PRCS CMPLT	SAMPLE MEASUREMENT	1573	2334	(26)	******	52	80	(19)	0	TWICE/ WEEK	CO. OS
	PERMIT REQUIREMENT	6676 DAILY AV	10014 DAILY MX	LBS/DY	******	REPORT DAILY AV	REPORT DAILY MX	MG/L		TWICE/ WEEK	COMPOS
PH 00400 J 0 0 INTMD TRT, PRCS CMPLT	SAMPLE MEASUREMENT	******	******	---- ****	6.5	******	7.9	(19)	0	CONTIN UOUS	RCORDR
	PERMIT REQUIREMENT	******	******		5.0 MINIMUM	******	11.0 MAXIMUM	MG/L		CONTIN UOUS	RCORDR
SOLIDS, TOTAL SUSPENDED (TSS) 00530 J 0 0 INTMD TRT, PRCS CMPLT	SAMPLE MEASUREMENT	178	281	(26)	******	6	9	(19)	0	TWICE/ WEEK	COMPOS
	PERMIT REQUIREMENT	1149 DAILY AV	3735 DAILY MX	LBS/DY	******	REPORT DAILY AV	REPORT DAILY MX	MG/L		TWICE/ WEEK	COMPOS
CARBON TETRACHLORIDE 32102 J 0 0 INTMD TRT, PRCS CMPLT	SAMPLE MEASUREMENT	0.00	0.00	(26)	******	******	******	---- ****	0	TWICE/ WEEK	COMPOS
	PERMIT REQUIREMENT	0.47 DAILY AV	0.99 DAILY MX	LBS/DY	******	******	******			TWICE/ WEEK	COMPOS
CHLOROFORM 32106 J 0 0 INTMD TRT, PRCS CMPLT	SAMPLE MEASUREMENT	0.26	0.82	(26)	******	******	******	---- ****	0	TWICE/ WEEK	CC OS
	PERMIT REQUIREMENT	0.55 DAILY AV	1.20 DAILY MX	LBS/DY	******	******	******			TWICE/ WEEK	COMPOS
BENZENE 34030 J 0 0 INTMD TRT, PRCS CMPLT	SAMPLE MEASUREMENT	0.00	0.00	(26)	******	0.00	0.00	(19)	0	TWICE/ WEEK	COMPOS
	PERMIT REQUIREMENT	0.97 DAILY AVG	3.55 DAILY MX	LBS/DY	******	REPORT DAILY AV	REPORT DAILY MX	MG/L		TWICE/ WEEK	COMPOS

NAME / TITLE PRINCIPAL EXECUTIVE OFFICER

R.P. Smith

Vice-President/General Mgr.

TYPED OR PRINTED

I certify under penalty of law that this document and all attachments were prepared under my direction or supervision in accordance with a system designed to assure that qualified personnel properly gather and evaluate the information submitted. Based on my inquiry of the person or persons who manage the system, or those persons directly responsible for gathering the information, the information submitted is, to the best of my knowledge and belief, true, accurate, and complete. I am aware that there are significant penalties for submitting false information, including the possibility of fine and imprisonment for knowing violations.

SIGNATURE OF PRINCIPAL EXECUTIVE OFFICER OR AUTHORIZED AGENT

TELEPHONE: 361 | 987-7000 (area code NUMBER)

DATE: 03 | 01 | 14 (YEAR | MO | DAY)

Forms by ChemSW (707) 864-0845 p/n11090dmr,v3.20 1/1/96

COMMENT AND EXPLANATION OF ANY VIOLATIONS (Reference all attachments here)

TPDES 02436

This is a 4 card form

PAGE 1 OF 2

CWA-Appendix G

EPA/FOIA2018-00193

VP0614

PERMITTEE NAME/ADDRESS: (Include Facility Name/Location if different)
NAME: FORMOSA PLASTICS CORP USA
ADDRESS: P.O. BOX 400
POINT COMFORT TX 77978

FACILITY: FORMOSA PLASTIC CORP USA

LOCATION: POINT COMFORT TX 77978
ATTN: R. P. Smith, Vice-President/General Mgr.

NATIONAL POLLUTANT DISCHARGE ELIMINATION SYSTEM (NPDES)
DISCHARGE MONITORING REPORT (DMR)

TX0085570	101 A
PERMIT NUMBER (2-16)	DISCHARGE NUMBER (17-19)

MAJOR
F-FINAL
TREATED PROCESS WASTEWATER

MONITORING PERIOD
FROM YEAR 02 (20-21) MO 12 (22-23) DAY 01 (24-25) TO YEAR 02 (26-27) MO 12 (28-29) DAY 31 (30-31)

*** NO DISCHARGE [ ] ***

NOTE: Read instructions before completing this form.

PARAMETER (32-37)		(3 Card Only) (46-53) QUANTITY OR LOADING (54-61) AVERAGE	MAXIMUM	UNITS	(4 Card Only) (38-45) QUALITY OR CONCENTRATION (46-53) MINIMUM	AVERAGE	MAXIMUM	UNITS	NO. EX (62-63)	FREQUENCY OF ANALYSIS (64-68)	SAMPLE TYPE (69-70)
CHLOROBENZENE	SAMPLE MEASUREMENT	0.00	0.00	(26)	******	******	******		0	TWICE/ WEEK	COMPOS
34301 J 0 0 INTMD TRT, PRCS CMPLT	PERMIT REQUIREMENT	0.39 DAILY AV	0.73 DAILY MX	LBS/DY	******	******	******	****		TWICE/ WEEK	COMPOS
METHYL CHLORIDE	SAMPLE MEASUREMENT	0.00	0.00	(26)	******	******	******		0	TWICE/ WEEK	COMPOS
34418 J 0 0 INTMD TRT, PRCS CMPLT	PERMIT REQUIREMENT	2.25 DAILY AV	4.96 DAILY MX	LBS/DY	******	******	******	****		TWICE/ WEEK	COMPOS
METHYLENE CHLORIDE, SUSPENDED	SAMPLE MEASUREMENT	0.00	0.00	(26)	******	******	******		0	TWICE/ WEEK	COMPOS
34425 J 0 0 INTMD TRT, PRCS CMPLT	PERMIT REQUIREMENT	1.04 DAILY AV	2.32 DAILY MX	LBS/DY	******	******	******	****		TWICE/ WEEK	COMPOS
TETRACHLOROETHYLENE	SAMPLE MEASUREMENT	0.00	0.00	(26)	******	******	******		0	TWICE/ WEEK	COMPOS
34475 J 0 0 INTMD TRT, PRCS CMPLT	PERMIT REQUIREMENT	0.57 DAILY AV	1.46 DAILY MX	LBS/DY	******	******	******	****		TWICE/ WEEK	COMPOS
1,1-DICHLOROETHANE	SAMPLE MEASUREMENT	0.00	0.00	(26)	******	******	******		0	TWICE/ WEEK	COMPOS
34496 J 0 0 INTMD TRT, PRCS CMPLT	PERMIT REQUIREMENT	0.57 DAILY AV	1.54 DAILY MX	LBS/DY	******	******	******	****		TWICE/ WEEK	COMPOS
1,1,1-TRICHLORO-ETHANE	SAMPLE MEASUREMENT	0.00	0.00	(26)	******	******	******		0	TWICE/ WEEK	COMPOS
34506 J 0 0 INTMD TRT, PRCS CMPLT	PERMIT REQUIREMENT	0.55 DAILY AV	1.41 DAILY MX	LBS/DY	******	******	******	****		TWICE/ WEEK	COMPOS
1,2-DICHLOROETHANE TOTAL WEIGHT	SAMPLE MEASUREMENT	0.06	0.52	(26)	******	0.00	0.02	(19)	0	TWICE/ WEEK	COMPOS
34531 J 0 0 INTMD TRT, PRCS CMPLT	PERMIT REQUIREMENT	1.78 DAILY AV	5.51 DAILY MX	LBS/DY	******	REPORT DAILY AV	REPORT DAILY MX	MG/L		TWICE/ WEEK	COMPOS

NAME / TITLE PRINCIPAL EXECUTIVE OFFICER
R.P. Smith
Vice-President/General Mgr.
TYPED OR PRINTED

I certify under penalty of law that this document and all attachments were prepared under my direction or supervision in accordance with a system designed to assure that qualified personnel properly gather and evaluate the information submitted. Based on my inquiry of the person or persons who manage the system, or those persons directly responsible for gathering the information, the information submitted is, to the best of my knowledge and belief, true, accurate, and complete. I am aware that there are significant penalties for submitting false information, including the possibility of fine and imprisonment for knowing violations.

SIGNATURE OF PRINCIPAL EXECUTIVE OFFICER OR AUTHORIZED AGENT

TELEPHONE: area code NUMBER 361 | 987-7000
DATE: YEAR | MO | DAY 03 | 01 | 14

COMMENT AND EXPLANATION OF ANY VIOLATIONS
(Reference all attachments here)

TPDES 02436

Forms by ChemSW(707)864-0845;pm11080dmr;v5.20;1/1/98

This is a 4-part form.

CWA-Appendix G
EPA/FOIA2018-00194
VP0614

PERMITTEE NAME/ADDRESS: *(Include Facility Name/Location if different)*

NAME: FORMOSA PLASTICS CORP USA
ADDRESS: P.O. BOX 400
POINT COMFORT TX 77978

FACILITY: FORMOSA PLASTIC CORP USA

LOCATION: POINT COMFORT TX 77978
ATTN: R. P. Smith, Vice-President/General Mgr.

NATIONAL POLLUTANT DISCHARGE ELIMINATION SYSTEM *(NPDES)*

DISCHARGE MONITORING REPORT *(DMR)*

TX0085570	101 A
PERMIT NUMBER (2-16)	DISCHARGE NUMBER (17-19)

MONITORING PERIOD

	YEAR	MO	DAY		YEAR	MO	DAY
FROM	02	12	01	TO	02	12	31
	(20-21)	(22-23)	(24-25)		(26-27)	(28-29)	(30-31)

MAJOR

F-FINAL
TREATED PROCESS WASTEWATER

*** NO DISCHARGE ☐ ***

NOTE: Read instructions before completing this form.

PARAMETER (32-37)		QUANTITY OR LOADING (3 Card Only) (46-53) AVERAGE	MAXIMUM (54-61)	UNITS	QUALITY OR CONCENTRATION (4 Card Only) (38-45) MINIMUM	AVERAGE (46-53)	MAXIMUM (54-61)	UNITS	NO. EX (62-63)	FREQUENCY OF ANALYSIS (64-68)	SAMPLE TYPE (69-70)
PHENOL,SINGLE COMPOUND 34694 J 0 0 INTMD TRT, PRCS CMPLT	SAMPLE MEASUREMENT	0.00	0.00	(26)	******	0.00	0.00	(19)	0	TWICE/ WEEK	COMPOS
	PERMIT REQUIREMENT	0.39 DAILY AV	0.68 DAILY MX	LBS/DY	******	REPORT DAILY AV	REPORT DAILY MX	MG/L		TWICE/ WEEK	COMPOS
FLOW, IN CONDUIT OR THRU TREATMENT PLANT 50050 J 0 0 INTMD TRT, PRCS CMPLT	SAMPLE MEASUREMENT	3.6	4.2	(03)	******	******	******		0	CONTIN UOUS	RC[illegible]DR
	PERMIT REQUIREMENT	4.0 DAILY AV	6.0 DAILY MX	MGD	******	******	******	**** ****		CONTIN UOUS	RCORDR
PH RANGE EXCURSIONS, > 60 MINUTES 82581 J 0 0 INTMD TRT, PRCS CMPLT	SAMPLE MEASUREMENT	******	0	(93)	******	******	******		0		
	PERMIT REQUIREMENT	******	0 MO TOTAL	OCCUR/ MONTH	******	******	******	**** ****		CONTIN UOUS	RCORDR
PH RANGE EXCURSIONS, MONTHLY TOTAL ACCUM 82582 J 0 0 INTMD TRT, PRCS CMPLT	SAMPLE MEASUREMENT	******	0	(14)	******	******	******		0		
	PERMIT REQUIREMENT	******	446 MO TOTAL	MIN-UTES	******	******	******	**** ****		CONTIN UOUS	RCORDR
	SAMPLE MEASUREMENT										
	PERMIT REQUIREMENT										
	SAMPLE MEASUREMENT										
	PERMIT REQUIREMENT										
	SAMPLE MEASUREMENT										
	PERMIT REQUIREMENT										

NAME / TITLE PRINCIPAL EXECUTIVE OFFICER
R.P. Smith
Vice-President/General Mgr.
TYPED OR PRINTED

I certify under penalty of law that this document and all attachments were prepared under my direction or supervision in accordance with a system designed to assure that qualified personnel properly gather and evaluate the information submitted. Based on my inquiry of the person or persons who manage the system, or those persons directly responsible for gathering the information, the information submitted is, to the best of my knowledge and belief, true, accurate, and complete. I am aware that there are significant penalties for submitting false information, including the possibility of fine and imprisonment for knowing violations.

SIGNATURE OF PRINCIPAL EXECUTIVE OFFICER OR AUTHORIZED AGENT

TELEPHONE	DATE
361 | 987-7000	03 | 01 | 14
area code NUMBER	YEAR | MO | DAY

COMMENT AND EXPLANATION OF ANY VIOLATIONS *(Reference all attachments here)*

Forms by ChemSW(707)884-0845;p/n11090dmr;v5.20;1/1/98

TPDES 02436

This is a 4-part form.

PERMITTEE NAME/ADDRESS: (Include Facility Name/Location if different)
NAME: FORMOSA PLASTICS CORP USA
ADDRESS: P.O. BOX 400
POINT COMFORT TX 77978

FACILITY: FORMOSA PLASTIC CORP USA

LOCATION: POINT COMFORT TX 77978
ATTN: R. P. Smith, Vice-President/General Mgr.

NATIONAL POLLUTANT DISCHARGE ELIMINATION SYSTEM (NPDES)
DISCHARGE MONITORING REPORT (DMR)

TX0085570	201 A
PERMIT NUMBER (2-16)	DISCHARGE NUMBER (17-19)

MAJOR
F-FINAL
TREATED AND COMBINED UTILITY

MONITORING PERIOD

	YEAR	MO	DAY		YEAR	MO	DAY
FROM	02	12	01	TO	02	12	31
	(20-21)	(22-23)	(24-25)		(26-27)	(28-29)	(30-31)

*** NO DISCHARGE [ ] ***

NOTE: Read instructions before completing this form.

PARAMETER (32-37)		(3 Card Only) (46-53) QUANTITY OR LOADING (54-61) AVERAGE	MAXIMUM	UNITS	(4 Card Only) (38-45) QUALITY OR CONCENTRATION (46-53) MINIMUM	AVERAGE	MAXIMUM	UNITS	NO. EX (62-63)	FREQUENCY OF ANALYSIS (64-68)	SAMPLE TYPE (69-70)
BOD, 5-DAY (20 DEG. C) 00310 J 0 0 INTMD TRT, PRCS CMPLT	SAMPLE MEASUREMENT	157	277	(26)	******	6	11	(19)	0	TWICE/ WEEK	COMPOS
	PERMIT REQUIREMENT	304 DAILY AV	608 DAILY MX	LBS/DY	******	REPORT DAILY AV	REPORT DAILY MX	MG/L		TWICE/ WEEK	COMPOS
OXYGEN DEMAND, CHEM. (HIGH LEVEL) (COD) 00340 J 0 0 INTMD TRT, PRCS CMPLT	SAMPLE MEASUREMENT	1509	2126	(26)	******	55	86	(19)	0	TWICE/ WEEK	CO.)S
	PERMIT REQUIREMENT	REPORT DAILY AV	REPORT DAILY MX	LBS/DY	******	REPORT DAILY AV	REPORT DAILY MX	MG/L		TWICE/ WEEK	COMPOS
PH 00400 J 0 0 INTMD TRT, PRCS CMPLT	SAMPLE MEASUREMENT	******	******	----	6.9	******	7.5	(19)	0	TWICE/ WEEK	GRAB
	PERMIT REQUIREMENT	******	******	****	6.0 MINIMUM	******	9.0 MAXIMUM	MG/L		TWICE/ WEEK	GRAB
SOLIDS, TOTAL SUSPENDED (TSS) 00530 J 0 0 INTMD TRT, PRCS CMPLT	SAMPLE MEASUREMENT	390	500	(26)	******	14	17	(19)	0	TWICE/ WEEK	COMPOS
	PERMIT REQUIREMENT	1729 DAILY AV	3006 DAILY MX	LBS/DY	******	REPORT DAILY AV	REPORT DAILY MX	MG/L		TWICE/ WEEK	COMPOS
COPPER, TOTAL (AS CU) 01042 J 0 0 INTMD TRT, PRCS CMPLT	SAMPLE MEASUREMENT	0.55	1.54	(26)	******	0.02	0.06	(19)	0	TWICE/ WEEK	COMPOS
	PERMIT REQUIREMENT	REPORT DAILY AV	REPORT DAILY MX	LBS/DY	******	REPORT DAILY AV	REPORT DAILY MX	MG/L		TWICE/ WEEK	COMPOS
LEAD, TOTAL (AS PB) 01051 J 0 0 INTMD TRT, PRCS CMPLT	SAMPLE MEASUREMENT	0.0	0.0	(26)	******	0.0	0.0	(19)	0	TWICE/ WEEK	CO)S
	PERMIT REQUIREMENT	6.61 DAILY AV	16.28 DAILY MX	LBS/DY	******	REPORT DAILY AV	REPORT DAILY MX	MG/L		TWICE/ WEEK	COMPOS
NICKEL, TOTAL (AS NI) 01067 J 0 0 INTMD TRT, PRCS CMPLT	SAMPLE MEASUREMENT	0.76	1.23	(26)	******	0.03	0.04	(19)	0	TWICE/ WEEK	COMPOS
	PERMIT REQUIREMENT	12.95 DAILY AV	33.59 DAILY MX	LBS/DY	******	REPORT DAILY AV	REPORT DAILY MX	MG/L		TWICE/ WEEK	COMPOS

NAME / TITLE PRINCIPAL EXECUTIVE OFFICER
R.P. Smith
Vice-President/General Mgr.
TYPED OR PRINTED

I certify under penalty of law that this document and all attachments were prepared under my direction or supervision in accordance with a system designed to assure that qualified personnel properly gather and evaluate the information submitted. Based on my inquiry of the person or persons who manage the system, or those persons directly responsible for gathering the information, the information submitted is, to the best of my knowledge and belief, true, accurate, and complete. I am aware that there are significant penalties for submitting false information, including the possibility of fine and imprisonment for knowing violations.

SIGNATURE OF PRINCIPAL EXECUTIVE OFFICER OR AUTHORIZED AGENT

TELEPHONE: 361| 987-7000 (area code NUMBER)

DATE: 03 | 01 | 14 (YEAR | MO | DAY)

COMMENT AND EXPLANATION OF ANY VIOLATIONS

(Reference all attachments here)

TPDES 02436

Forms by ChemSW(707)864-0845;p/n110900dmr;v5.20;1/1/96

This is a 4-part form.

CWA-Appendix G
EPA/FOIA2018-00196
VP0614

PERMITTEE NAME/ADDRESS: (Include Facility Name/Location if different)

NAME: FORMOSA PLASTICS CORP USA

ADDRESS: P.O. BOX 400

POINT COMFORT TX 77978

FACILITY: FORMOSA PLASTIC CORP USA

LOCATION: POINT COMFORT TX 77978

ATTN: R. P. Smith, Vice-President/General Mgr.

NATIONAL POLLUTANT DISCHARGE ELIMINATION SYSTEM (NPDES)

DISCHARGE MONITORING REPORT (DMR)

TX0085570	201 A
PERMIT NUMBER (2-16)	DISCHARGE NUMBER (17-19)

MAJOR

F-FINAL

TREATED AND COMBINED UTILITY

MONITORING PERIOD

	YEAR	MO	DAY		YEAR	MO	DAY
FROM	02	12	01	TO	02	12	31
	(20-21)	(22-23)	(24-25)		(26-27)	(28-29)	(30-31)

*** NO DISCHARGE [ ] ***

NOTE: Read Instructions before completing this form.

PARAMETER (32-37)		(3 Card Only) QUANTITY OR LOADING (46-53) AVERAGE	(54-61) MAXIMUM	UNITS	(4 Card Only) QUALITY OR CONCENTRATION (38-45) MINIMUM	(46-53) AVERAGE	(54-61) MAXIMUM	UNITS	NO. EX (62-63)	FREQUENCY OF ANALYSIS (64-68)	SAMPLE TYPE (69-70)
TITANIUM, TOTAL (AS TI) 01152 J 0 0 INTMD TRT, PRCS CMPLT	SAMPLE MEASUREMENT	0.00	0.00	(26)	******	0.00	0.00	(19)	0	TWICE/ WEEK	COMPOS
	PERMIT REQUIREMENT	REPORT DAILY AV	REPORT DAILY MX	LBS/DY	******	REPORT DAILY AV	REPORT DAILY MX	MG/L		TWICE/ WEEK	COMPOS
FLOW, IN CONDUIT OR THRU TREATMENT PLANT 50050 J 0 0 INTMD TRT, PRCS CMPLT	SAMPLE MEASUREMENT	3.3	4.2	(03)	******	******	******	****	0	CONTIN UOUS	RC OR
	PERMIT REQUIREMENT	REPORT DAILY AV	REPORT DAILY MX	MGD	******	******	******	****		CONTIN UOUS	RCORDR
CHLORINE, TOTAL RESIDUAL 50060 J 0 0 INTMD TRT, PRCS CMPLT	SAMPLE MEASUREMENT	0.4	0.5	(26)	******	0.0	0.0	(19)	0	TWICE/ WEEK	COMPOS
	PERMIT REQUIREMENT	26.8 DAILY AV	44.33 DAILY MX	LBS/DY	******	REPORT DAILY AV	REPORT DAILY MX	MG/L		TWICE/ WEEK	COMPOS
	SAMPLE MEASUREMENT										
	PERMIT REQUIREMENT										
	SAMPLE MEASUREMENT										
	PERMIT REQUIREMENT										
	SAMPLE MEASUREMENT										
	PERMIT REQUIREMENT										
	SAMPLE MEASUREMENT										
	PERMIT REQUIREMENT										

NAME / TITLE PRINCIPAL EXECUTIVE OFFICER

R.P. Smith

Vice-President/General Mgr.

TYPED OR PRINTED

I certify under penalty of law that this document and all attachments were prepared under my direction or supervision in accordance with a system designed to assure that qualified personnel properly gather and evaluate the information submitted. Based on my inquiry of the person or persons who manage the system, or those persons directly responsible for gathering the information, the information submitted is, to the best of my knowledge and belief, true, accurate, and complete. I am aware that there are significant penalties for submitting false information, including the possibility of fine and imprisonment for knowing violations.

SIGNATURE OF PRINCIPAL EXECUTIVE OFFICER OR AUTHORIZED AGENT

TELEPHONE	DATE
361 987-7000	03 | 01 | 14
area code NUMBER	YEAR | MO | DAY

COMMENT AND EXPLANATION OF ANY VIOLATIONS

(Reference all attachments here)

TPDES 02436

Forms by ChemSW(707)884-0843;pm11090dmr;v5.20;01/04

This is a 4-part form

PERMITTEE NAME/ADDRESS: (Include Facility Name/Location if different)

NAME: FORMOSA PLASTICS CORP USA
ADDRESS: P.O. BOX 400
POINT COMFORT TX 77978

FACILITY: FORMOSA PLASTIC CORP USA

LOCATION: POINT COMFORT TX 77978
ATTN: R. P. Smith, Vice-President/General Mgr.

NATIONAL POLLUTANT DISCHARGE ELIMINATION SYSTEM (NPDES)
DISCHARGE MONITORING REPORT (DMR)

TX0085570	002 A
PERMIT NUMBER (2-16)	DISCHARGE NUMBER (17-19)

MONITORING PERIOD

	YEAR	MO	DAY		YEAR	MO	DAY
FROM	02	12	01	TO	02	12	31
	(20-21)	(22-23)	(24-25)		(26-27)	(28-29)	(30-31)

MAJOR
F-FINAL
NEAR ST. HWY. 35 & VCM SPHERE
*** NO DISCHARGE ☐ ***
NOTE: Read Instructions before completing this form.

PARAMETER (32-37)		(3 Card Only) (46-53) QUANTITY OR LOADING (54-61) AVERAGE	MAXIMUM	UNITS	(4 Card Only) (38-45) QUALITY OR CONCENTRATION (46-53) MINIMUM	AVERAGE	MAXIMUM	UNITS	NO. EX (62-63)	FREQUENCY OF ANALYSIS (64-68)	SAMPLE TYPE (69-70)
PH 00400 1 0 0 EFFLUENT GROSS VALUE	SAMPLE MEASUREMENT	*******	******	****	7.4	*******	7.4	(12)	0	DAILY	GRAB
	PERMIT REQUIREMENT	*******	******	****	6.0 MINIMUM	*******	9.0 MAXIMUM	SU		DAILY	GRAB
OIL & GREASE 00556 1 0 0 EFFLUENT GROSS VALUE	SAMPLE MEASUREMENT	*******	******	****	******	*******	4	(19)	0	DAILY	GR[illegible]
	PERMIT REQUIREMENT	*******	******	****	******	*******	15 DAILY MX	MG/L		DAILY	GRAB
CARBON, TOT ORGANIC (TOC) 00680 1 0 0 EFFLUENT GROSS VALUE	SAMPLE MEASUREMENT	*******	******	****	******	*******	8	(19)	0	DAILY	GRAB
	PERMIT REQUIREMENT	*******	******	****	******	*******	55 DAILY MX	MG/ L		DAILY	GRAB
PURGEABLE HYDRO-CARBONS, METH. 601 03768 1 0 0 EFFLUENT GROSS VALUE	SAMPLE MEASUREMENT	*******	******	****	******	0.0	0.0	(19)	0	DAILY	GRAB
	PERMIT REQUIREMENT	*******	******	****	******	REPORT DAILY AV	REPORT DAILY MX	MG/L		DAILY	GRAB
1,2 DICHLOROETHANE, TOTAL WEIGHT 34531 1 0 0 EFFLUENT GROSS VALUE	SAMPLE MEASUREMENT	*******	******	****	******	******	0.0	(19)	0	DAILY	GRAB
	PERMIT REQUIREMENT	*******	******	****	******	******	0.4 DAILY MX	MG/L		DAILY	GRAB
	SAMPLE MEASUREMENT										
	PERMIT REQUIREMENT										
	SAMPLE MEASUREMENT										
	PERMIT REQUIREMENT										

NAME / TITLE PRINCIPAL EXECUTIVE OFFICER
R.P. Smith
Vice-President/General Mgr.
TYPED OR PRINTED

I certify under penalty of law that this document and all attachments were prepared under my direction or supervision in accordance with a system designed to assure that qualified personnel properly gather and evaluate the information submitted. Based on my inquiry of the person or persons who manage the system, or those persons directly responsible for gathering the information, the information submitted is, to the best of my knowledge and belief, true, accurate, and complete. I am aware that there are significant penalties for submitting false information, including the possibility of fine and imprisonment for knowing violations.

SIGNATURE OF PRINCIPAL EXECUTIVE OFFICER OR AUTHORIZED AGENT

TELEPHONE	DATE
361 | 987-7000	03 | 01 | 14
area code NUMBER	YEAR | MO | DAY

COMMENT AND EXPLANATION OF ANY VIOLATIONS (Reference all attachments here)
WHEN DISCHARGING, INITIAL SAMPLE COLLECTED WITHIN 15 MINUTES AFTER A DISCHARGE BEGINS.
TPDES 02436

Forms by ChemSW(707)884-0845;p/n11090dmr;v5.20;1/1/94

This is a 4-part form.

PERMITTEE NAME/ADDRESS: (Include Facility Name/Location if different)
NAME: FORMOSA PLASTICS CORP USA
ADDRESS: P.O. BOX 400
POINT COMFORT TX 77978

FACILITY: FORMOSA PLASTIC CORP USA

LOCATION: POINT COMFORT TX 77978
ATTN: R. P. Smith, Vice-President/General Mgr.

NATIONAL POLLUTANT DISCHARGE ELIMINATION SYSTEM (NPDES)
DISCHARGE MONITORING REPORT (DMR)

TX0085570	003 A
PERMIT NUMBER (2-16)	DISCHARGE NUMBER (17-19)

MONITORING PERIOD

	YEAR	MO	DAY		YEAR	MO	DAY
FROM	02	12	01	TO	02	12	31
	(20-21)	(22-23)	(24-25)		(26-27)	(28-29)	(30-31)

MAJOR
F-FINAL
NEAR UTILITIES BLOCK
*** NO DISCHARGE [ ] ***

NOTE: Read instructions before completing this form.

PARAMETER (32-37)		(3 Card Only) (46-53) QUANTITY OR LOADING (54-61) AVERAGE	MAXIMUM	UNITS	(4 Card Only) (38-45) QUALITY OR CONCENTRATION (46-53) MINIMUM	AVERAGE	MAXIMUM	UNITS	NO. EX (62-63)	FREQUENCY OF ANALYSIS (64-68)	SAMPLE TYPE (69-70)
PH	SAMPLE MEASUREMENT	*******	******		7.7	*******	8.4	(12)	0	DAILY	GRAB
00400 1 0 0 EFFLUENT GROSS VALUE	PERMIT REQUIREMENT	*******	******	**** ****	6.0 MINIMUM	******	9.0 MAXIMUM	SU		DAILY	GRAB
OIL & GREASE	SAMPLE MEASUREMENT	*******	******		******	*******	5	(19)	0	DAILY	GRAB
00556 1 0 0 EFFLUENT GROSS VALUE	PERMIT REQUIREMENT	*******	******	**** ****	******	******	15 DAILY MX	MG/L		DAILY	GRAB
CARBON, TOT ORGANIC (TOC)	SAMPLE MEASUREMENT	*******	******		******	*******	17	(19)	0	DAILY	GRAB
00680 1 0 0 EFFLUENT GROSS VALUE	PERMIT REQUIREMENT	*******	******	**** ****	******	******	55 DAILY MX	MG/ L		DAILY	GRAB
PURGEABLE HYDRO-CARBONS, METH. 601	SAMPLE MEASUREMENT	*******	******		******	0.0	0.0	(19)	0	DAILY	GRAB
03768 1 0 0 EFFLUENT GROSS VALUE	PERMIT REQUIREMENT	*******	******	**** ****	******	REPORT DAILY AV	REPORT DAILY MX	MG/L		DAILY	GRAB
1,2 DICHLOROETHANE, TOTAL WEIGHT	SAMPLE MEASUREMENT	*******	******		******	******	0.0	(19)	0	DAILY	GRAB
34531 1 0 0 EFFLUENT GROSS VALUE	PERMIT REQUIREMENT	*******	******	**** ****	******	******	014 DAILY MX	MG/L		DAILY	GRAB
	SAMPLE MEASUREMENT										
	PERMIT REQUIREMENT										
	SAMPLE MEASUREMENT										
	PERMIT REQUIREMENT										

NAME / TITLE PRINCIPAL EXECUTIVE OFFICER			TELEPHONE	DATE
R.P. Smith Vice-President/General Mgr. TYPED OR PRINTED	I certify under penalty of law that this document and all attachments were prepared under my direction or supervision in accordance with a system designed to assure that qualified personnel properly gather and evaluate the information submitted. Based on my inquiry of the person or persons who manage the system, or those persons directly responsible for gathering the information, the information submitted is, to the best of my knowledge and belief, true, accurate, and complete. I am aware that there are significant penalties for submitting false information, including the possibility of fine and imprisonment for knowing violations.	SIGNATURE OF PRINCIPAL EXECUTIVE OFFICER OR AUTHORIZED AGENT	361| 987-7000 area code NUMBER	03 | 01 | 14 YEAR | MO | DAY

Forms by ChemSW(707)864-0845;p/n110900dmr;v5.20;1/1/00

COMMENT AND EXPLANATION OF ANY VIOLATIONS (Reference all attachments here)
WHEN DISCHARGING, INITIAL SAMPLE COLLECTED WITHIN 15 MINUTES AFTER A DISCHARGE BEGINS.
TPDES 02436

This is a 4-part form.

CWA-Appendix G
EPA/FOIA2018-00199
VP0614

PERMITTEE NAME/ADDRESS: (Include Facility Name/Location if different)
NAME: FORMOSA PLASTICS CORP USA
ADDRESS: P.O. BOX 400
POINT COMFORT TX 77978

FACILITY: FORMOSA PLASTIC CORP USA

LOCATION: POINT COMFORT TX 77978
ATTN: R. P. Smith, Vice-President/General Mgr.

NATIONAL POLLUTANT DISCHARGE ELIMINATION SYSTEM (NPDES)
DISCHARGE MONITORING REPORT (DMR)

TX0085570	004 A
PERMIT NUMBER (2-16)	DISCHARGE NUMBER (17-19)

MONITORING PERIOD

	YEAR	MO	DAY		YEAR	MO	DAY
FROM	02	12	01	TO	02	12	31
	(20-21)	(22-23)	(24-25)		(26-27)	(28-29)	(30-31)

MAJOR

F-FINAL
NEAR ST. HWY 35 & WWTP

*** NO DISCHARGE [ ] ***

NOTE: Read instructions before completing this form.

PARAMETER (32-37)		(3 Card Only) (46-53) QUANTITY OR LOADING (54-61) AVERAGE	MXIMUM	UNITS	(4 Card Only) (38-45) QUALITY OR CONCENTRATION (46-53) MINIMUM	AVERAGE	(54-61) MAXIMUM	UNITS	NO. EX (62-63)	FREQUENCY OF ANALYSIS (64-68)	SAMPLE TYPE (69-70)
PH 00400 1 0 0 EFFLUENT GROSS VALUE	SAMPLE MEASUREMENT	*******	******	****	7.4	*******	7.6	(12)	0	DAILY	GRAB
	PERMIT REQUIREMENT	*******	******	****	6.0 MINIMUM	******	9.0 MAXIMUM	SU		DAILY	GRAB
OIL & GREASE 00556 1 0 0 EFFLUENT GROSS VALUE	SAMPLE MEASUREMENT	*******	******	****	******	*******	5	(19)	0	DAILY	GRAB
	PERMIT REQUIREMENT	*******	******	****	******	******	15 DAILY MX	MG/L		DAILY	GRAB
CARBON, TOT ORGANIC (TOC) 00680 1 0 0 EFFLUENT GROSS VALUE	SAMPLE MEASUREMENT	*******	******	****	******	*******	12	(19)	0	DAILY	GRAB
	PERMIT REQUIREMENT	*******	******	****	******	******	55 DAILY MX	MG/ L		DAILY	GRAB
PURGEABLE HYDRO-CARBONS, METH. 601 03768 1 0 0 EFFLUENT GROSS VALUE	SAMPLE MEASUREMENT	*******	******	****	******	0.0	0.0	(19)	0	DAILY	GRAB
	PERMIT REQUIREMENT	*******	******	****	******	REPORT DAILY AV	REPORT DAILY MX	MG/L		DAILY	GRAB
1,2 DICHLOROETHANE, TOTAL WEIGHT 34531 1 0 0 EFFLUENT GROSS VALUE	SAMPLE MEASUREMENT	*******	******	****	******	******	0.0	(19)	0	DAILY	GRAB
	PERMIT REQUIREMENT	*******	******	****	******	******	0.4 DAILY MX	MG/L		DAILY	GRAB
	SAMPLE MEASUREMENT										
	PERMIT REQUIREMENT										
	SAMPLE MEASUREMENT										
	PERMIT REQUIREMENT										

NAME / TITLE PRINCIPAL EXECUTIVE OFFICER
R.P. Smith
Vice-President/General Mgr.
TYPED OR PRINTED

I certify under penalty of law that this document and all attachments were prepared under my direction or supervision in accordance with a system designed to assure that qualified personnel properly gather and evaluate the information submitted. Based on my inquiry of the person or persons who manage the system, or those persons directly responsible for gathering the information, the information submitted is, to the best of my knowledge and belief, true, accurate, and complete. I am aware that there are significant penalties for submitting false information, including the possibility of fine and imprisonment for knowing violations.

SIGNATURE OF PRINCIPAL EXECUTIVE OFFICER OR AUTHORIZED AGENT

TELEPHONE	DATE
361 987-7000	03 01 14
area code NUMBER	YEAR MO DAY

COMMENT AND EXPLANATION OF ANY VIOLATIONS (Reference all attachments here)
WHEN DISCHARGING, INITIAL SAMPLE COLLECTED WITHIN 15 MINUTES AFTER A DISCHARGE BEGINS.
TPDES 02436

Forms by ChemSW(707)864-0845;pln11090dmr;v3.20;1/1/94

This is a 4-part form.

PERMITTEE NAME/ADDRESS: (Include Facility Name/Location if different)

NAME: FORMOSA PLASTICS CORP USA
ADDRESS: P.O. BOX 400
POINT COMFORT TX 77978

FACILITY: FORMOSA PLASTIC CORP USA

LOCATION: POINT COMFORT TX 77978
ATTN: R. P. Smith, Vice-President/General Mgr.

NATIONAL POLLUTANT DISCHARGE ELIMINATION SYSTEM (NPDES)

DISCHARGE MONITORING REPORT (DMR)

TX0085570	005 A
PERMIT NUMBER (2-16)	DISCHARGE NUMBER (17-19)

MAJOR

F-FINAL
NEAR ST. HWY. 35 & DRYING BEDS

MONITORING PERIOD

	YEAR	MO	DAY		YEAR	MO	DAY
FROM	02	12	01	TO	02	12	31
	(20-21)	(22-23)	(24-25)		(26-27)	(28-29)	(30-31)

*** NO DISCHARGE ☐ ***

NOTE: Read instructions before completing this form.

PARAMETER (32-37)		(3 Card Only) (46-53) QUANTITY OR LOADING (54-61) AVERAGE	MAXIMUM	UNITS	(4 Card Only) (38-45) QUALITY OR CONCENTRATION (46-53) (54-61) MINIMUM	AVERAGE	MAXIMUM	UNITS	NO. EX (62-63)	FREQUENCY OF ANALYSIS (64-68)	SAMPLE TYPE (69-70)
PH	SAMPLE MEASUREMENT	*******	******		7.5	*******	7.6	(12)	0	DAILY	GRAB
00400 1 0 0 EFFLUENT GROSS VALUE	PERMIT REQUIREMENT	*******	******	****	6.0 MINIMUM	*******	9.0 MAXIMUM	SU		DAILY	GRAB
OIL & GREASE	SAMPLE MEASUREMENT	*******	******		******	*******	4	(19)	0	DAILY	G 3
00556 1 0 0 EFFLUENT GROSS VALUE	PERMIT REQUIREMENT	*******	******	****	******	*******	15 DAILY MX	MG/L		DAILY	GRAB
CARBON, TOT ORGANIC (TOC)	SAMPLE MEASUREMENT	*******	******		******	*******	11	(19)	0	DAILY	GRAB
00680 1 0 0 EFFLUENT GROSS VALUE	PERMIT REQUIREMENT	*******	******	****	******	*******	55 DAILY MX	MG/ L		DAILY	GRAB
PURGEABLE HYDRO-CARBONS. METH. 601	SAMPLE MEASUREMENT	*******	******		******	0.0	0.0	(19)	0	DAILY	GRAB
03768 1 0 0 EFFLUENT GROSS VALUE	PERMIT REQUIREMENT	*******	******	****	******	REPORT DAILY AV	REPORT DAILY MX	MG/L		DAILY	GRAB
1,2 DICHLOROETHANE, TOTAL WEIGHT	SAMPLE MEASUREMENT	*******	******		******	******	0.0	(19)	0	DAILY	GRAB
34531 1 0 0 EFFLUENT GROSS VALUE	PERMIT REQUIREMENT	*******	******	****	******	******	0.4 DAILY MX	MG/L		DAILY	GRAB
	SAMPLE MEASUREMENT										
	PERMIT REQUIREMENT										
	SAMPLE MEASUREMENT										
	PERMIT REQUIREMENT										

NAME / TITLE PRINCIPAL EXECUTIVE OFFICER
R.P. Smith
Vice-President/General Mgr.
TYPED OR PRINTED

I certify under penalty of law that this document and all attachments were prepared under my direction or supervision in accordance with a system designed to assure that qualified personnel properly gather and evaluate the information submitted. Based on my inquiry of the person or persons who manage the system, or those persons directly responsible for gathering the information, the information submitted is, to the best of my knowledge and belief, true, accurate, and complete. I am aware that there are significant penalties for submitting false information, including the possibility of fine and imprisonment for knowing violations.

SIGNATURE OF PRINCIPAL EXECUTIVE OFFICER OR AUTHORIZED AGENT

TELEPHONE	DATE
361 | 987-7000	03 | 01 | 14
area code NUMBER	YEAR | MO | DAY

COMMENT AND EXPLANATION OF ANY VIOLATIONS (Reference all attachments here)
WHEN DISCHARGING, INITIAL SAMPLE COLLECTED WITHIN 15 MINUTES AFTER A DISCHARGE BEGINS.
TPDES 02436

Forms by ChemSW(707)864-0645;p/n11090dmr;v5.20;1/1/98

This is a 4-part form

PERMITTEE NAME/ADDRESS: (Include Facility Name/Location if different)

NAME: FORMOSA PLASTICS CORP USA
ADDRESS: P.O. BOX 400
POINT COMFORT TX 77978

FACILITY: FORMOSA PLASTIC CORP USA

LOCATION: POINT COMFORT TX 77978
ATTN: R. P. Smith, Vice-President/General Mgr.

NATIONAL POLLUTANT DISCHARGE ELIMINATION SYSTEM (NPDES)
DISCHARGE MONITORING REPORT (DMR)

TX0085570	006 A
PERMIT NUMBER (2-16)	DISCHARGE NUMBER (17-19)

MAJOR
F-FINAL
200 FT. N ST HWY 35 AT CREEK

MONITORING PERIOD

	YEAR	MO	DAY		YEAR	MO	DAY
FROM	02	12	01	TO	02	12	31
	(20-21)	(22-23)	(24-25)		(26-27)	(28-29)	(30-31)

*** NO DISCHARGE [ ] ***

NOTE: Read instructions before completing this form.

PARAMETER (32-37)		(3 Card Only) QUANTITY OR LOADING (46-53) AVERAGE	(54-61) MAXIMUM	UNITS	(4 Card Only) QUALITY OR CONCENTRATION (38-45) MINIMUM	(46-53) AVERAGE	(54-61) MAXIMUM	UNITS	NO. EX (62-63)	FREQUENCY OF ANALYSIS (64-68)	SAMPLE TYPE (69-70)
PH 00400 1 0 0 EFFLUENT GROSS VALUE	SAMPLE MEASUREMENT	*******	******	****	7.2	*******	7.8	(12)	0	DAILY	GRAB
	PERMIT REQUIREMENT	*******	******	****	6.0 MINIMUM	*******	9.0 MAXIMUM	SU		DAILY	GRAB
OIL & GREASE 00556 1 0 0 EFFLUENT GROSS VALUE	SAMPLE MEASUREMENT	*******	******	****	******	*******	6	(19)	0	DAILY	GR.
	PERMIT REQUIREMENT	*******	******	****	******	*******	15 DAILY MX	MG/L		DAILY	GRAB
CARBON, TOT ORGANIC (TOC) 00680 1 0 0 EFFLUENT GROSS VALUE	SAMPLE MEASUREMENT	*******	******	****	******	*******	11	(19)	0	DAILY	GRAB
	PERMIT REQUIREMENT	*******	******	****	******	*******	55 DAILY MX	MG/ L		DAILY	GRAB
	SAMPLE MEASUREMENT										
	PERMIT REQUIREMENT										
	SAMPLE MEASUREMENT										
	PERMIT REQUIREMENT										
	SAMPLE MEASUREMENT										
	PERMIT REQUIREMENT										
	SAMPLE MEASUREMENT										
	PERMIT REQUIREMENT										

NAME / TITLE PRINCIPAL EXECUTIVE OFFICER
R.P. Smith
Vice-President/General Mgr.
TYPED OR PRINTED

I certify under penalty of law that this document and all attachments were prepared under my direction or supervision in accordance with a system designed to assure that qualified personnel properly gather and evaluate the information submitted. Based on my inquiry of the person or persons who manage the system, or those persons directly responsible for gathering the information, the information submitted is, to the best of my knowledge and belief, true, accurate, and complete. I am aware that there are significant penalties for submitting false information, including the possibility of fine and imprisonment for knowing violations.

SIGNATURE OF PRINCIPAL EXECUTIVE OFFICER OR AUTHORIZED AGENT

TELEPHONE	DATE
361 | 987-7000	03 | 01 | 14
area code NUMBER	YEAR | MO | DAY

Forms by ChemSW(707)864-0845;phf11090dmr;v5.20;1/1/04

COMMENT AND EXPLANATION OF ANY VIOLATIONS (Reference all attachments here)
WHEN DISCHARGING, INITIAL SAMPLE COLLECTED WITHIN 15 MINUTES AFTER A DISCHARGE BEGINS.
TPDES 02436

This is a 4-part form.

CWA-Appendix G
EPA/FOIA2018-00202
VP0614

PERMITTEE NAME/ADDRESS: (Include Facility Name/Location if different)

NAME: FORMOSA PLASTICS CORP USA
ADDRESS: P.O. BOX 400
POINT COMFORT TX 77978

FACILITY: FORMOSA PLASTIC CORP USA

LOCATION: POINT COMFORT TX 77978
ATTN: R. P. Smith, Vice-President/General Mgr.

NATIONAL POLLUTANT DISCHARGE ELIMINATION SYSTEM (NPDES)
DISCHARGE MONITORING REPORT (DMR)

TX0085570 — PERMIT NUMBER (2-16)
007 A — DISCHARGE NUMBER (17-19)

MONITORING PERIOD

FROM YEAR 02 MO 12 DAY 01 (20-21) (22-23) (24-25) TO YEAR 02 MO 12 DAY 31 (26-27) (28-29) (30-31)

MAJOR
F-FINAL
1,500 FT N ST HWY 35
*** NO DISCHARGE ☐ ***

NOTE: Read instructions before completing this form.

PARAMETER (32-37)		(3 Card Only) QUANTITY OR LOADING (46-53) AVERAGE	MAXIMUM (54-61)	UNITS	(4 Card Only) QUALITY OR CONCENTRATION (38-45) MINIMUM	(46-53) AVERAGE	(54-61) MAXIMUM	UNITS	NO. EX (62-63)	FREQUENCY OF ANALYSIS (64-68)	SAMPLE TYPE (69-70)
PH 00400 1 0 0 EFFLUENT GROSS VALUE	SAMPLE MEASUREMENT	*******	******		7.4	*******	8.5	(12)	0	DAILY	GRAB
	PERMIT REQUIREMENT	*******	******	****	6.0 MINIMUM	*******	9.0 MAXIMUM	SU		DAILY	GRAB
OIL & GREASE 00556 1 0 0 EFFLUENT GROSS VALUE	SAMPLE MEASUREMENT	*******	******		******	*******	5	(19)	0	DAILY	G[illegible]B
	PERMIT REQUIREMENT	*******	******	****	******	*******	15 DAILY MX	MG/L		DAILY	GRAB
CARBON, TOT ORGANIC (TOC) 00680 1 0 0 EFFLUENT GROSS VALUE	SAMPLE MEASUREMENT	*******	******		******	*******	11	(19)	0	DAILY	GRAB
	PERMIT REQUIREMENT	*******	******	****	******	*******	55 DAILY MX	MG/L		DAILY	GRAB
	SAMPLE MEASUREMENT										
	PERMIT REQUIREMENT										
	SAMPLE MEASUREMENT										
	PERMIT REQUIREMENT										
	SAMPLE MEASUREMENT										
	PERMIT REQUIREMENT										
	SAMPLE MEASUREMENT										
	PERMIT REQUIREMENT										

NAME / TITLE PRINCIPAL EXECUTIVE OFFICER
R.P. Smith
Vice-President/General Mgr.
TYPED OR PRINTED

I certify under penalty of law that this document and all attachments were prepared under my direction or supervision in accordance with a system designed to assure that qualified personnel properly gather and evaluate the information submitted. Based on my inquiry of the person or persons who manage the system, or those persons directly responsible for gathering the information, the information submitted is, to the best of my knowledge and belief, true, accurate, and complete. I am aware that there are significant penalties for submitting false information, including the possibility of fine and imprisonment for knowing violations.

SIGNATURE OF PRINCIPAL EXECUTIVE OFFICER OR AUTHORIZED AGENT

TELEPHONE: 361 | 987-7000 (area code NUMBER)
DATE: 03 | 01 | 14 (YEAR | MO | DAY)

COMMENT AND EXPLANATION OF ANY VIOLATIONS (Reference all attachments here)
WHEN DISCHARGING, INITIAL SAMPLE COLLECTED WITHIN 15 MINUTES AFTER A DISCHARGE BEGINS.
TPDES 02436

Forms by ChemSW(707)884-0845;p/n11090dmr;v5.20;1/1/96

This is a 4-part form

PERMITTEE NAME/ADDRESS: (Include Facility Name/Location if different)
NAME: FORMOSA PLASTICS CORP USA
ADDRESS: P.O. BOX 400
POINT COMFORT TX 77978

FACILITY: FORMOSA PLASTIC CORP USA

LOCATION: POINT COMFORT TX 77978
ATTN: R. P. Smith, Vice-President/General Mgr.

NATIONAL POLLUTANT DISCHARGE ELIMINATION SYSTEM (NPDES)
DISCHARGE MONITORING REPORT (DMR)

TX0085570	008 A
PERMIT NUMBER (2-16)	DISCHARGE NUMBER (17-19)

MONITORING PERIOD

	YEAR	MO	DAY		YEAR	MO	DAY
FROM	02	12	01	TO	02	12	31
	(20-21)	(22-23)	(24-25)		(26-27)	(28-29)	(30-31)

MAJOR

F-FINAL
3,000 FT N ST HWY 35

*** NO DISCHARGE [ ] ***

NOTE: Read instructions before completing this form.

PARAMETER (32-37)		(3 Card Only) (46-53) QUANTITY OR LOADING (54-61) AVERAGE	MAXIMUM	UNITS	(4 Card Only) (38-45) QUALITY OR CONCENTRATION (46-53) MINIMUM	AVERAGE	(54-61) MAXIMUM	UNITS	NO. EX (62-63)	FREQUENCY OF ANALYSIS (64-68)	SAMPLE TYPE (69-70)
PH	SAMPLE MEASUREMENT	*******	******		7.5	*******	8.4	(12)	0	DAILY	GRAB
00400 1 0 0 EFFLUENT GROSS VALUE	PERMIT REQUIREMENT	*******	******	****	6.0 MINIMUM	*******	9.0 MAXIMUM	SU		DAILY	GRAB
OIL & GREASE	SAMPLE MEASUREMENT	*******	******		******	*******	5	(19)	0	DAILY	G. .B
00556 1 0 0 EFFLUENT GROSS VALUE	PERMIT REQUIREMENT	*******	******	****	******	*******	15 DAILY MX	MG/L		DAILY	GRAB
CARBON, TOT ORGANIC (TOC)	SAMPLE MEASUREMENT	*******	******		******	*******	6	(19)	0	DAILY	GRAB
00680 1 0 0 EFFLUENT GROSS VALUE	PERMIT REQUIREMENT	*******	******	****	******	*******	55 DAILY MX	MG/ L		DAILY	GRAB
	SAMPLE MEASUREMENT										
	PERMIT REQUIREMENT										
	SAMPLE MEASUREMENT										
	PERMIT REQUIREMENT										
	SAMPLE MEASUREMENT										
	PERMIT REQUIREMENT										
	SAMPLE MEASUREMENT										
	PERMIT REQUIREMENT										

NAME / TITLE PRINCIPAL EXECUTIVE OFFICER			TELEPHONE	DATE
R.P. Smith Vice-President/General Mgr. TYPED OR PRINTED	I certify under penalty of law that this document and all attachments were prepared under my direction or supervision in accordance with a system designed to assure that qualified personnel properly gather and evaluate the information submitted. Based on my inquiry of the person or persons who manage the system, or those persons directly responsible for gathering the information, the information submitted is, to the best of my knowledge and belief, true, accurate, and complete. I am aware that there are significant penalties for submitting false information, including the possibility of fine and imprisonment for knowing violations.	SIGNATURE OF PRINCIPAL EXECUTIVE OFFICER OR AUTHORIZED AGENT	361| 987-7000 area code NUMBER	03 | 01 | 14 YEAR | MO | DAY

COMMENT AND EXPLANATION OF ANY VIOLATIONS (Reference all attachments here)
WHEN DISCHARGING, INITIAL SAMPLE COLLECTED WITHIN 15 MINUTES AFTER A DISCHARGE BEGINS.
TPDES 02436

Forms by ChemSW(707)864-0845;p/n11090dmr;v5.20;1/1/94

This is a 4-part form.

CWA-Appendix G
EPA/FOIA2018-00204
VP0614

PERMITTEE NAME/ADDRESS: (Include Facility Name/Location if different)
NAME: FORMOSA PLASTICS CORP USA
ADDRESS: P.O. BOX 400
POINT COMFORT TX 77978

FACILITY: FORMOSA PLASTIC CORP USA

LOCATION: POINT COMFORT TX 77978
ATTN: R. P. Smith, Vice-President/General Mgr.

NATIONAL POLLUTANT DISCHARGE ELIMINATION SYSTEM (NPDES)
DISCHARGE MONITORING REPORT (DMR)

TX0085570 — PERMIT NUMBER (2-16)
009 A — DISCHARGE NUMBER (17-19)

MAJOR
F-FINAL
1.2 MILES N ST HWY 35

MONITORING PERIOD
FROM YEAR 02 MO 12 DAY 01 (20-21) (22-23) (24-25) TO YEAR 02 MO 12 DAY 31 (26-27) (28-29) (30-31)

*** NO DISCHARGE [ ] ***

NOTE: Read instructions before completing this form.

PARAMETER (32-37)		(3 Card Only) (46-53) QUANTITY OR LOADING (54-61) AVERAGE	MXIMUM	UNITS	(4 Card Only) (38-45) QUALITY OR CONCENTRATION (46-53) MINIMUM	AVERAGE	MAXIMUM	UNITS	NO. EX (62-63)	FREQUENCY OF ANALYSIS (64-68)	SAMPLE TYPE (69-70)
PH 00400 1 0 0 EFFLUENT GROSS VALUE	SAMPLE MEASUREMENT	*******	******	****	7.7	*******	8.2	(12)	0	DAILY	GRAB
	PERMIT REQUIREMENT	*******	******	****	6.0 MINIMUM	*******	9.0 MAXIMUM	SU		DAILY	GRAB
OIL & GREASE 00556 1 0 0 EFFLUENT GROSS VALUE	SAMPLE MEASUREMENT	*******	******	****	******	*******	5	(19)	0	DAILY	GR
	PERMIT REQUIREMENT	*******	******	****	******	*******	15 DAILY MX	MG/L		DAILY	GRAB
CARBON, TOT ORGANIC (TOC) 00680 1 0 0 EFFLUENT GROSS VALUE	SAMPLE MEASUREMENT	*******	******	****	******	*******	10	(19)	0	DAILY	GRAB
	PERMIT REQUIREMENT	*******	******	****	******	*******	55 DAILY MX	MG/ L		DAILY	GRAB
	SAMPLE MEASUREMENT										
	PERMIT REQUIREMENT										
	SAMPLE MEASUREMENT										
	PERMIT REQUIREMENT										
	SAMPLE MEASUREMENT										
	PERMIT REQUIREMENT										
	SAMPLE MEASUREMENT										
	PERMIT REQUIREMENT										

NAME / TITLE PRINCIPAL EXECUTIVE OFFICER
R.P. Smith
Vice-President/General Mgr.
TYPED OR PRINTED

I certify under penalty of law that this document and all attachments were prepared under my direction or supervision in accordance with a system designed to assure that qualified personnel properly gather and evaluate the information submitted. Based on my inquiry of the person or persons who manage the system, or those persons directly responsible for gathering the information, the information submitted is, to the best of my knowledge and belief, true, accurate, and complete. I am aware that there are significant penalties for submitting false information, including the possibility of fine and imprisonment for knowing violations.

SIGNATURE OF PRINCIPAL EXECUTIVE OFFICER OR AUTHORIZED AGENT

TELEPHONE: 361| 987-7000 (area code NUMBER)
DATE: 03 | 01 | 14 (YEAR | MO | DAY)

COMMENT AND EXPLANATION OF ANY VIOLATIONS (Reference all attachments here)
WHEN DISCHARGING, INITIAL SAMPLE COLLECTED WITHIN 15 MINUTES AFTER A DISCHARGE BEGINS.
TPDES 02436

Forms by ChemSW(707)864-0845;phl110900;mr;4.20;1/1/98

This is a 4-part form.

PERMITTEE NAME/ADDRESS: *(Include Facility Name/Location if different)*

NAME: FORMOSA PLASTICS CORP USA

ADDRESS: P.O. BOX 400

POINT COMFORT TX 77978

FACILITY: FORMOSA PLASTIC CORP USA

LOCATION: POINT COMFORT TX 77978

ATTN: R. P. Smith, Vice-President/General Mgr.

NATIONAL POLLUTANT DISCHARGE ELIMINATION SYSTEM *(NPDES)*

DISCHARGE MONITORING REPORT *(DMR)*

PERMIT NUMBER (2-16)	DISCHARGE NUMBER (17-19)
TX0085570	010 A

MONITORING PERIOD

	YEAR	MO	DAY		YEAR	MO	DAY
FROM	02	12	01	TO	02	12	31
	(20-21)	(22-23)	(24-25)		(26-27)	(28-29)	(30-31)

MAJOR

F-FINAL

S BOUNDARY MARINE TANK FARM

*** NO DISCHARGE ☐ ***

NOTE: Read instructions before completing this form.

PARAMETER (32-37)		(3 Card Only) (46-53) QUANTITY OR LOADING (54-61) AVERAGE	MAXIMUM	UNITS	(4 Card Only) (38-45) QUALITY OR CONCENTRATION (46-53) (54-61) MINIMUM	AVERAGE	MAXIMUM	UNITS	NO. EX (62-63)	FREQUENCY OF ANALYSIS (64-68)	SAMPLE TYPE (69-70)
PH 00400 1 0 0 EFFLUENT GROSS VALUE	SAMPLE MEASUREMENT	*******	******	****	7.2	*******	8.3	(12)	0	DAILY	GRAB
	PERMIT REQUIREMENT	*******	******	****	6.0 MINIMUM	*******	9.0 MAXIMUM	SU		DAILY	GRAB
OIL & GREASE 00556 1 0 0 EFFLUENT GROSS VALUE	SAMPLE MEASUREMENT	*******	******	****	******	*******	4	(19)	0	DAILY	GRAB
	PERMIT REQUIREMENT	*******	******	****	******	*******	15 DAILY MX	MG/L		DAILY	GRAB
CARBON, TOT ORGANIC (TOC) 00680 1 0 0 EFFLUENT GROSS VALUE	SAMPLE MEASUREMENT	*******	******	****	******	*******	9	(19)	0	DAILY	GRAB
	PERMIT REQUIREMENT	*******	******	****	******	*******	55 DAILY MX	MG/ L		DAILY	GRAB
	SAMPLE MEASUREMENT										
	PERMIT REQUIREMENT										
	SAMPLE MEASUREMENT										
	PERMIT REQUIREMENT										
	SAMPLE MEASUREMENT										
	PERMIT REQUIREMENT										
	SAMPLE MEASUREMENT										
	PERMIT REQUIREMENT										

NAME / TITLE PRINCIPAL EXECUTIVE OFFICER

R.P. Smith

Vice-President/General Mgr.

TYPED OR PRINTED

I certify under penalty of law that this document and all attachments were prepared under my direction or supervision in accordance with a system designed to assure that qualified personnel properly gather and evaluate the information submitted. Based on my inquiry of the person or persons who manage the system, or those persons directly responsible for gathering the information, the information submitted is, to the best of my knowledge and belief, true, accurate, and complete. I am aware that there are significant penalties for submitting false information, including the possibility of fine and imprisonment for knowing violations.

SIGNATURE OF PRINCIPAL EXECUTIVE OFFICER OR AUTHORIZED AGENT

TELEPHONE	DATE
361 | 987-7000	03 | 01 | 03
area code NUMBER	YEAR | MO | DAY

COMMENT AND EXPLANATION OF ANY VIOLATIONS *(Reference all attachments here)*

WHEN DISCHARGING, INITIAL SAMPLE COLLECTED WITHIN 15 MINUTES AFTER A DISCHARGE BEGINS.

TPDES 02436

Forms by ChemSW(707)864-0845;p/n11090dmr;v6.20;1/1/96

This is a 4-part form.

PERMITTEE NAME/ADDRESS: *(Include Facility Name/Location if different)*

NAME: FORMOSA PLASTICS CORP USA
ADDRESS: P.O. BOX 400
POINT COMFORT TX 77978

FACILITY: FORMOSA PLASTIC CORP USA

LOCATION: POINT COMFORT TX 77978
ATTN: R. P. Smith, Vice-President/General Mgr.

NATIONAL POLLUTANT DISCHARGE ELIMINATION SYSTEM *(NPDES)*

DISCHARGE MONITORING REPORT *(DMR)*

TX0085570	011 A
PERMIT NUMBER (2-16)	DISCHARGE NUMBER (17-19)

MONITORING PERIOD

	YEAR	MO	DAY		YEAR	MO	DAY
FROM	02	12	01	TO	02	12	31
	(20-21)	(22-23)	(24-25)		(26-27)	(28-29)	(30-31)

MAJOR
F-FINAL
SE DOCK TANK FARM
*** NO DISCHARGE ☐ ***

NOTE: Read instructions before completing this form.

PARAMETER (32-37)		(3 Card Only) (46-53) QUANTITY OR LOADING (54-61) AVERAGE	MAXIMUM	UNITS	(4 Card Only) (38-45) QUALITY OR CONCENTRATION (46-53) (54-61) MINIMUM	AVERAGE	MAXIMUM	UNITS	NO. EX (62-63)	FREQUENCY OF ANALYSIS (64-68)	SAMPLE TYPE (69-70)
PH 00400 1 0 0 EFFLUENT GROSS VALUE	SAMPLE MEASUREMENT	*******	******	****	6.9	*******	8.8	(12)	0	DAILY	GRAB
	PERMIT REQUIREMENT	*******	******	****	6.0 MINIMUM	*******	9.0 MAXIMUM	SU		DAILY	GRAB
OIL & GREASE 00556 1 0 0 EFFLUENT GROSS VALUE	SAMPLE MEASUREMENT	*******	******	****	******	*******	5	(19)	0	DAILY	GR[illegible]
	PERMIT REQUIREMENT	*******	******	****	******	*******	15 DAILY MX	MG/L		DAILY	GRAB
CARBON, TOT ORGANIC (TOC) 00680 1 0 0 EFFLUENT GROSS VALUE	SAMPLE MEASUREMENT	*******	******	****	******	*******	4	(19)	0	DAILY	GRAB
	PERMIT REQUIREMENT	*******	******	****	******	*******	55 DAILY MX	MG/L		DAILY	GRAB
	SAMPLE MEASUREMENT										
	PERMIT REQUIREMENT										
	SAMPLE MEASUREMENT										
	PERMIT REQUIREMENT										
	SAMPLE MEASUREMENT										
	PERMIT REQUIREMENT										
	SAMPLE MEASUREMENT										
	PERMIT REQUIREMENT										

NAME / TITLE PRINCIPAL EXECUTIVE OFFICER
R.P. Smith
Vice-President/General Mgr.
TYPED OR PRINTED

I certify under penalty of law that this document and all attachments were prepared under my direction or supervision in accordance with a system designed to assure that qualified personnel properly gather and evaluate the information submitted. Based on my inquiry of the person or persons who manage the system, or those persons directly responsible for gathering the information, the information submitted is, to the best of my knowledge and belief, true, accurate, and complete. I am aware that there are significant penalties for submitting false information, including the possibility of fine and imprisonment for knowing violations.

SIGNATURE OF PRINCIPAL EXECUTIVE OFFICER OR AUTHORIZED AGENT

TELEPHONE	DATE
361 | 987-7000	03 | 01 | 14
area code NUMBER	YEAR | MO | DAY

COMMENT AND EXPLANATION OF ANY VIOLATIONS *(Reference all attachments here)*
WHEN DISCHARGING, INITIAL SAMPLE COLLECTED WITHIN 15 MINUTES AFTER A DISCHARGE BEGINS.
TPDES 02436

Forms by ChemSW(707)664-0645;p/n11090dmr;v6.20;1/1/96

This is a 4-part form.

PERMITTEE NAME/ADDRESS: *(Include Facility Name/Location if different)*

NAME: FORMOSA PLASTICS CORP USA

ADDRESS: P.O. BOX 400
POINT COMFORT TX 77978

FACILITY: FORMOSA PLASTIC CORP USA

LOCATION: POINT COMFORT TX 77978

ATTN: R. P. Smith, Vice-President/General Mgr.

NATIONAL POLLUTANT DISCHARGE ELIMINATION SYSTEM *(NPDES)*

DISCHARGE MONITORING REPORT *(DMR)*

TX0085570	012 A
PERMIT NUMBER (2-16)	DISCHARGE NUMBER (17-19)

MONITORING PERIOD

	YEAR	MO	DAY		YEAR	MO	DAY
FROM	02	12	01	TO	02	12	31
	(20-21)	(22-23)	(24-25)		(26-27)	(28-29)	(30-31)

MAJOR

F-FINAL

N E PLANT PROP/HIUSACHE CREEK

*** NO DISCHARGE XXX ***

NOTE: Read instructions before completing this form.

PARAMETER (32-37)		(3 Card Only) (46-53) QUANTITY OR LOADING (54-61) AVERAGE	MAXIMUM	UNITS	(4 Card Only) (38-45) QUALITY OR CONCENTRATION (46-53) (54-61) MINIMUM	AVERAGE	MAXIMUM	UNITS	NO. EX (62-63)	FREQUENCY OF ANALYSIS (64-68)	SAMPLE TYPE (69-70)
PH	SAMPLE MEASUREMENT	*******	******			*******		(12)		DAILY	GRAB
00400 1 0 0 EFFLUENT GROSS VALUE	PERMIT REQUIREMENT	*******	******	**** ****	6.0 MINIMUM	*******	9.0 MAXIMUM	SU		DAILY	GRAB
OIL & GREASE	SAMPLE MEASUREMENT	*******	******		******	*******		(19)		DAILY	GR[illegible]
00556 1 0 0 EFFLUENT GROSS VALUE	PERMIT REQUIREMENT	*******	******	**** ****	******	*******	15 DAILY MX	MG/L		DAILY	GRAB
CARBON, TOT ORGANIC (TOC)	SAMPLE MEASUREMENT	*******	******		******	*******		(19)		DAILY	GRAB
00680 1 0 0 EFFLUENT GROSS VALUE	PERMIT REQUIREMENT	*******	******	**** ****	******	*******	55 DAILY MX	MG/ L		DAILY	GRAB
	SAMPLE MEASUREMENT										
	PERMIT REQUIREMENT										
	SAMPLE MEASUREMENT										
	PERMIT REQUIREMENT										
	SAMPLE MEASUREMENT										
	PERMIT REQUIREMENT										
	SAMPLE MEASUREMENT										
	PERMIT REQUIREMENT										

NAME / TITLE PRINCIPAL EXECUTIVE OFFICER			TELEPHONE	DATE
R.P. Smith Vice-President/General Mgr.	I certify under penalty of law that this document and all attachments were prepared under my direction or supervision in accordance with a system designed to assure that qualified personnel properly gather and evaluate the information submitted. Based on my inquiry of the person or persons who manage the system, or those persons directly responsible for gathering the information, the information submitted is, to the best of my knowledge and belief, true, accurate, and complete. I am aware that there are significant penalties for submitting false information, including the possibility of fine and imprisonment for knowing violations.	SIGNATURE OF PRINCIPAL EXECUTIVE OFFICER OR AUTHORIZED AGENT	361 | 987-7000 area code NUMBER	03 | 01 | 14 YEAR | MO | DAY
TYPED OR PRINTED				

COMMENT AND EXPLANATION OF ANY VIOLATIONS *(Reference all attachments here)*

WHEN DISCHARGING, INITIAL SAMPLE COLLECTED WITHIN 15 MINUTES AFTER A DISCHARGE BEGINS.

TPDES 02436

Forms by ChemSW(707)864-0845;p/n11090dmr;v6.20;1/1/98

This is a 4-part form.

PERMITTEE NAME/ADDRESS: (Include Facility Name/Location if different)
NAME: FORMOSA PLASTICS CORP., TEXAS
ADDRESS: P.O. BOX 700
POINT COMFORT, TX 77978

FACILITY: FORMOSA PLASTIC CORP USA

LOCATION: POINT COMFORT TX 77978
ATTN: R. P. Smith, Vice-President/General Mgr.

NATIONAL POLLUTANT DISCHARGE ELIMINATION SYSTEM (NPDES)
DISCHARGE MONITORING REPORT (DMR)

TX 0085570 — PERMIT NUMBER (2-18)
TX1 Q — DISCHARGE NUMBER (17-19)

MONITORING PERIOD
FROM YEAR 02 | MO 10 | DAY 01 (20-21) (22-23) (24-25)
TO YEAR 02 | MO 12 | DAY 31 (26-27) (28-29) (30-31)

MAJOR
F-FINAL
QUARTERLY REPORTING - 001
*** NO DISCHARGE ☐ ***

NOTE: Read instructions before completing this form.

PARAMETER (52-37)		(3 Card Only) (46-53) QUANTITY OR LOADING (54-61) AVERAGE	MAXIMUM	UNITS	(4 Card Only) (38-45) QUALITY OR CONCENTRATION (46-53) MINIMUM	AVERAGE	(54-61) MAXIMUM	UNITS	NO. EX (62-63)	FREQUENCY OF ANALYSIS (64-68)	SAMPLE TYPE (69-70)
WHOLE EFFLUENT TOXICITY 22414 1 0 1 EFFLUENT GROSS VALUE	SAMPLE MEASUREMENT	******	******	----	100	100	******	(23) PER-CENT	0	QTRLY	COMP
	PERMIT REQUIREMENT	******	******	****	REPORT 7 DA MIN	REPORT MO AV MN	******			QTRLY	COMP
	SAMPLE MEASUREMENT										
	PERMIT REQUIREMENT										
	SAMPLE MEASUREMENT										
	PERMIT REQUIREMENT										
	SAMPLE MEASUREMENT										
	PERMIT REQUIREMENT										
	SAMPLE MEASUREMENT										
	PERMIT REQUIREMENT										
	SAMPLE MEASUREMENT										
	PERMIT REQUIREMENT										
	SAMPLE MEASUREMENT										
	PERMIT REQUIREMENT										

NAME / TITLE PRINCIPAL EXECUTIVE OFFICER
R.P. Smith
Vice-President/General Mgr.
TYPED OR PRINTED

I certify under penalty of law that this document and all attachments were prepared under my direction or supervision in accordance with a system designed to assure that qualified personnel properly gather and evaluate the information submitted. Based on my inquiry of the person or persons who manage the system, or those persons directly responsible for gathering the information, the information submitted is, to the best of my knowledge and belief, true, accurate, and complete. I am aware that there are significant penalties for submitting false information, including the possibility of fine and imprisonment for knowing violations.

SIGNATURE OF PRINCIPAL EXECUTIVE OFFICER OR AUTHORIZED AGENT

TELEPHONE: 361 | 987-7000 (area code NUMBER)
DATE: 03 | 01 | 15 (YEAR | MO | DAY)

Forms by ChlwnSW(707)884-0845;p/n1 1090dmr;v5.20;1

COMMENT AND EXPLANATION OF ANY VIOLATIONS (Reference all attachments here)

TPDES PERMIT 02436

This is a 4-part form.

VP0614
EPA/FOIA2018-00209
CWA-Appendix G

FORMOSA PLASTICS CORPORATION, TEXAS
DMR FILE

ISO-9002 CERTIFIED
ISO-14001 CERTIFIED

P. O. BOX 700
201 FORMOSA DRIVE
POINT COMFORT, TEXAS 77978

PHONE: 361/987-7000
FAX: 361/987-2363

FILE

December 20, 2002

Certified Mail
7001-2510-0008-0640-3436

Ms. Debra Berry
U.S. Environmental Protection Agency
Compliance Assurance & Enforcement Division
Water Enforcement Branch (6 EN-WC)
1445 Ross Avenue
Dallas, TX 75202-2733

RE: TPDES Permit No. 02436
EPA ID No. TX0085570
Addendum to November 2002
Discharge Monitoring Reports

Dear Ms. Berry:

Enclosed are the Discharge Monitoring Reports for the month of November 2002. For the month of November 2002, there was one exceedance reported on the DMR for Biochemical Oxygen Demand (BOD) Daily Maximum Limit for internal Outfall 201.

In a letter dated November 13, 2002, Formosa reported that the limit for BOD (5-Day) Daily Maximum Limit was exceeded at internal Outfall 201. The BOD Daily Maximum Limit value that was reported for the November 7, 2002 incident was 613 lbs./days. The permit Daily Maximum Limit for BOD on Outfall 201 is 608 lbs./day. Initial notifications were made to Ms. Debra Berry, EPA, on November 14, 2002.

As required by the current discharge permit, the FPC Combined Wastewater Treatment facility sampled Outfall 201 on November 7, 2002 by taking a routine 24 Hr. Composite sample for monitoring purposes. After Technical Department completed the composite sample analysis, it was found that the sample was 613 lbs./day compared to the Daily Maximum Limit of 608 lbs./day. Per standard operating procedures, appropriate actions were taken to correct the situation, as stated in the letter dated November 7, 2002.

The composite sample at Outfall 001 for November 7, 2002 was within permit limits. The result was 448 lbs./day, which is within the permit required Daily Maximum Limit of 2727 lbs./day. Based on this information, there was no offsite impact as a result of this incident.

Should you require additional information or assistance, please contact Monique Wells, at (361) 987-7463. b(7)(c)

Sincerely,

R. P. Smith
Vice President/General Manager
Formosa Plastics Corporation, Texas

Enclosure

NAME: FORMOSA PLASTICS CORP USA
ADDRESS: P.O. BOX 400
POINT COMFORT TX 77978

FACILITY: FORMOSA PLASTIC CORP USA

LOCATION: POINT COMFORT TX 77978
ATTN: R. P. Smith, Vice-President/General Mgr.

NATIONAL POLLUTANT DISCHARGE ELIMINATION SYSTEM (NPDES)
DISCHARGE MONITORING REPORT (DMR)

TX0085570 — PERMIT NUMBER (2-16)

201 A — DISCHARGE NUMBER (17-19)

MAJOR
F-FINAL
TREATED AND COMBINED UTILITY

MONITORING PERIOD

FROM YEAR (20-21)	MO (22-23)	DAY (24-25)	TO YEAR (26-27)	MO (28-29)	DAY (30-31)
02	11	01	02	11	30

*** NO DISCHARGE [ ] ***

NOTE: Read Instructions before completing this form.

PARAMETER (32-37)		(3 Card Only) QUANTITY OR LOADING (46-53) AVERAGE	(54-61) MAXIMUM	UNITS	(4 Card Only) QUALITY OR CONCENTRATION (38-45) MINIMUM	(46-53) AVERAGE	(54-61) MAXIMUM	UNITS	NO. EX (62-63)	FREQUENCY OF ANALYSIS (64-68)	SAMPLE TYPE (69-70)
BOD, 5-DAY (20 DEG. C) 00310 J 0 0 INTMD TRT, PRCS CMPLT	SAMPLE MEASUREMENT	223	613	(26)	******	8	17	(19)	1	TWICE/ WEEK	COMPOS
	PERMIT REQUIREMENT	304 DAILY AV	608 DAILY MX	LBS/DY	******	REPORT DAILY AV	REPORT DAILY MX	MG/L		TWICE/ WEEK	COMPOS
OXYGEN DEMAND, CHEM. (HIGH LEVEL) (COD) 00340 J 0 0 INTMD TRT, PRCS CMPLT	SAMPLE MEASUREMENT	1994	3011	(26)	******	71	84	(19)	0	TWICE/ WEEK	COMPOS
	PERMIT REQUIREMENT	REPORT DAILY AV	REPORT DAILY MX	LBS/DY	******	REPORT DAILY AV	REPORT DAILY MX	MG/L		TWICE/ WEEK	COMPOS
PH 00400 J 0 0 INTMD TRT, PRCS CMPLT	SAMPLE MEASUREMENT	******	******	----	6.9	******	7.6	(19)	0	TWICE/ WEEK	GRAB
	PERMIT REQUIREMENT	******	******	****	6.0 MINIMUM	******	9.0 MAXIMUM	MG/L		TWICE/ WEEK	GRAB
SOLIDS, TOTAL SUSPENDED (TSS) 00530 J 0 0 INTMD TRT, PRCS CMPLT	SAMPLE MEASUREMENT	464	739	(26)	******	16	26	(19)	0	TWICE/ WEEK	COMPOS
	PERMIT REQUIREMENT	1729 DAILY AV	3008 DAILY MX	LBS/DY	******	REPORT DAILY AV	REPORT DAILY MX	MG/L		TWICE/ WEEK	COMPOS
COPPER, TOTAL (AS CU) 01042 J 0 0 INTMD TRT, PRCS CMPLT	SAMPLE MEASUREMENT	0.57	1.68		******	0.02	0.05	(19)	0	TWICE/ WEEK	COMPOS
	PERMIT REQUIREMENT	REPORT DAILY AV	REPORT DAILY MX		******	REPORT DAILY AV	REPORT DAILY MX	MG/L		TWICE/ WEEK	COMPOS
LEAD, TOTAL (AS PB) 01051 J 0 0 INTMD TRT, PRCS CMPLT	SAMPLE MEASUREMENT	0.0	0.0	(26)	******	0.0	0.0	(19)	0	TWICE/ WEEK	COMPOS
	PERMIT REQUIREMENT	0.61 DAILY AV	16.28 DAILY MX	LBS/DY	******	REPORT DAILY AV	REPORT DAILY MX	MG/L		TWICE/ WEEK	COMPOS
NICKEL, TOTAL (AS NI) 01067 J 0 0 INTMD TRT, PRCS CMPLT	SAMPLE MEASUREMENT	1.19	3.02		******	0.04	0.11	(19)	0	TWICE/ WEEK	COMPOS
	PERMIT REQUIREMENT	12.95 DAILY AV	33.59 DAILY MX		******	REPORT DAILY AV	REPORT DAILY MX	MG/L		TWICE/ WEEK	COMPOS

NAME / TITLE PRINCIPAL EXECUTIVE OFFICER
R.P. Smith
Vice-President/General Mgr.
TYPED OR PRINTED

I certify under penalty of law that this document and all attachments were prepared under my direction or supervision in accordance with a system designed to assure that qualified personnel properly gather and evaluate the information submitted. Based on my inquiry of the person or persons who manage the system, or those persons directly responsible for gathering the information, the information submitted is, to the best of my knowledge and belief, true, accurate, and complete. I am aware that there are significant penalties for submitting false information, including the possibility of fine and imprisonment for knowing violations.

SIGNATURE OF PRINCIPAL EXECUTIVE OFFICER OR AUTHORIZED AGENT

TELEPHONE: area code NUMBER 361| 987-7000
DATE: YEAR | MO | DAY 02 | 12 | 16

COMMENT AND EXPLANATION OF ANY VIOLATIONS (Reference all attachments here)
The BOD daily maximum was exceeded on November 07, 2002. The BOD on Outfall 001 was within permit limits; and therefore, there was no offsite impact.
TPDES 02436

Forms by ChemSW(707)884-0845;pm110800dmr;v5.20;1/1/96

This is a 4-part form.

CWA-Appendix G
EPA/FOIA2018-00212
VP0614

NAME: FORMOSA PLASTICS CORP USA
ADDRESS: P.O. BOX 400
POINT COMFORT TX 77978

FACILITY: FORMOSA PLASTIC CORP USA

LOCATION: POINT COMFORT TX 77978
ATTN: R. P. Smith, Vice-President/General Mgr.

DISCHARGE MONITORING REPORT (DMR)

TX0085570	007 A
PERMIT NUMBER (2-16)	DISCHARGE NUMBER (17-19)

MONITORING PERIOD

	YEAR	MO	DAY		YEAR	MO	DAY
FROM	02	10	01	TO	02	10	31
	(20-21)	(22-23)	(24-25)		(26-27)	(28-29)	(30-31)

MAJOR

F-FINAL
1,500 FT N ST HWY 35

*** NO DISCHARGE ☐ ***

NOTE: Read instructions before completing this form.

PARAMETER (32-37)		(3 Card Only) QUANTITY OR LOADING (46-53) AVERAGE	MAXIMUM	UNITS	(4 Card Only) QUALITY OR CONCENTRATION (38-45) MINIMUM	(46-53) AVERAGE	(54-61) MAXIMUM	UNITS	NO. EX (62-63)	FREQUENCY OF ANALYSIS (64-68)	SAMPLE TYPE (69-70)
PH 00400 1 0 0 EFFLUENT GROSS VALUE	SAMPLE MEASUREMENT	*******	******	****	7.4	*******	8.5	(12)	0	DAILY	GRAB
	PERMIT REQUIREMENT	*******	******	****	6.0 MINIMUM	-------	9.0 MAXIMUM	SU		DAILY	GRAB
OIL & GREASE 00556 1 0 0 EFFLUENT GROSS VALUE	SAMPLE MEASUREMENT	*******	******	****	******	*******	4	(19)	0	DAILY	GRAB
	PERMIT REQUIREMENT	*******	******	****	******	-------	15 DAILY MX	MG/L		DAILY	GRAB
CARBON, TOT ORGANIC (TOC) 00680 1 0 0 EFFLUENT GROSS VALUE	SAMPLE MEASUREMENT	*******	******	****	******	*******	13	(19)	0	DAILY	GRAB
	PERMIT REQUIREMENT	*******	******	****	******	-------	55 DAILY MX	MG/L		DAILY	GRAB
	SAMPLE MEASUREMENT										
	PERMIT REQUIREMENT										
	SAMPLE MEASUREMENT										
	PERMIT REQUIREMENT										
	SAMPLE MEASUREMENT										
	PERMIT REQUIREMENT										
	SAMPLE MEASUREMENT										
	PERMIT REQUIREMENT										

NAME / TITLE PRINCIPAL EXECUTIVE OFFICER
R.P. Smith
Vice-President/General Mgr.
TYPED OR PRINTED

I certify under penalty of law that this document and all attachments were prepared under my direction or supervision in accordance with a system designed to assure that qualified personnel properly gather and evaluate the information submitted. Based on my inquiry of the person or persons who manage the system, or those persons directly responsible for gathering the information, the information submitted is, to the best of my knowledge and belief, true, accurate, and complete, I am aware that there are significant penalties for submitting false information, including the possibility of fine and imprisonment for knowing violations.

SIGNATURE OF PRINCIPAL EXECUTIVE OFFICER OR AUTHORIZED AGENT

TELEPHONE	DATE
361 | 987-7000	02 | 11 | 19
area code NUMBER	YEAR | MO | DAY

COMMENT AND EXPLANATION OF ANY VIOLATIONS (Reference all attachments here)
WHEN DISCHARGING, INITIAL SAMPLE COLLECTED WITHIN 15 MINUTES AFTER A DISCHARGE BEGINS.

Forms by ChemSW(707)864-0845;pm11090dmr v5.20;1/1/96

This is a 4-part form.

VP0614

EPA/FOIA2018-00214

CWA-Appendix G

PERMITTEE NAME/ADDRESS: *(Include Facility Name/Location if different)*

NAME: FORMOSA PLASTICS CORP USA
ADDRESS: P.O. BOX 400
POINT COMFORT TX 77978

FACILITY: FORMOSA PLASTIC CORP USA

LOCATION: POINT COMFORT TX 77978
ATTN: R. P. Smith, Vice-President/General Mgr.

NATIONAL POLLUTANT DISCHARGE ELIMINATION SYSTEM *(NPDES)*
DISCHARGE MONITORING REPORT *(DMR)*

TX0085570 — PERMIT NUMBER (2-15)
008 A — DISCHARGE NUMBER (17-19)

MONITORING PERIOD

	YEAR	MO	DAY		YEAR	MO	DAY
FROM	02	10	01	TO	02	10	31
	(20-21)	(22-23)	(24-25)		(26-27)	(28-29)	(30-31)

MAJOR
F-FINAL
3,000 FT N ST HWY 35

*** NO DISCHARGE ☐ ***

NOTE: Read instructions before completing this form.

PARAMETER (32-37)		(3 Card Only) (46-53) QUANTITY OR LOADING (54-61) AVERAGE	MAXIMUM	UNITS	(4 Card Only) (38-45) QUALITY OR CONCENTRATION (46-53) (54-61) MINIMUM	AVERAGE	MAXIMUM	UNITS	NO. EX (42-43)	FREQUENCY OF ANALYSIS (64-68)	SAMPLE TYPE (69-70)
PH 00400 1 0 0 EFFLUENT GROSS VALUE	SAMPLE MEASUREMENT	*******	******	****	7.1	*******	8.7	(12)	0	DAILY	GRAB
	PERMIT REQUIREMENT	******	******	****	6.0 MINIMUM	------	9.0 MAXIMUM	SU		DAILY	GRAB
OIL & GREASE 00556 1 0 0 EFFLUENT GROSS VALUE	SAMPLE MEASUREMENT	*******	******	****	******	*******	4	(19)	0	DAILY	GRAB
	PERMIT REQUIREMENT	******	******	****	******	------	15 DAILY MX	MG/L		DAILY	GRAB
CARBON, TOT ORGANIC (TOC) 00680 1 0 0 EFFLUENT GROSS VALUE	SAMPLE MEASUREMENT	*******	******	****	******	*******	15	(19)	0	DAILY	GRAB
	PERMIT REQUIREMENT	******	******	****	******	------	55 DAILY MX	MG/L		DAILY	GRAB
	SAMPLE MEASUREMENT										
	PERMIT REQUIREMENT										
	SAMPLE MEASUREMENT										
	PERMIT REQUIREMENT										
	SAMPLE MEASUREMENT										
	PERMIT REQUIREMENT										
	SAMPLE MEASUREMENT										
	PERMIT REQUIREMENT										

NAME / TITLE PRINCIPAL EXECUTIVE OFFICER
R.P. Smith
Vice-President/General Mgr.
TYPED OR PRINTED

I certify under penalty of law that this document and all attachments were prepared under my direction or supervision in accordance with a system designed to assure that qualified personnel properly gather and evaluate the information submitted. Based on my inquiry of the person or persons who manage the system, or those persons directly responsible for gathering the information, the information submitted is, to the best of my knowledge and belief, true, accurate, and complete. I am aware that there are significant penalties for submitting false information, including the possibility of fine and imprisonment for knowing violations.

SIGNATURE OF PRINCIPAL EXECUTIVE OFFICER OR AUTHORIZED AGENT

TELEPHONE: 361 | 987-7000 (area code NUMBER)
DATE: 02 | 11 | 19 (YEAR | MO | DAY)

Forms by ChemSW(707)664-0645;p/n11090dmr;v5.20;1/1/98

COMMENT AND EXPLANATION OF ANY VIOLATIONS *(Reference all attachments here)*
WHEN DISCHARGING, INITIAL SAMPLE COLLECTED WITHIN 15 MINUTES AFTER A DISCHARGE BEGINS.

NPDES 02436

This is a 4-part form.

PERMITTEE NAME/ADDRESS: (Include Facility Name/Location if different)
NAME: FORMOSA PLASTICS CORP., TEXAS
ADDRESS: P.O. BOX 700
POINT COMFORT, TX 77978

FACILITY: FORMOSA PLASTIC CORP USA

LOCATION: POINT COMFORT TX 77978
ATTN: R. P. Smith, Vice-President/General Mgr.

NATIONAL POLLUTANT DISCHARGE ELIMINATION SYSTEM (NPDES)
DISCHARGE MONITORING REPORT (DMR)

TX 0085570 — PERMIT NUMBER (2-16)
TX1 Q — DISCHARGE NUMBER (17-19)

MONITORING PERIOD

	YEAR	MO	DAY		YEAR	MO	DAY
FROM	02	07	01	TO	02	09	30
	(20-21)	(22-23)	(24-25)		(26-27)	(28-29)	(30-31)

MAJOR
F-FINAL
QUARTERLY REPORTING - 001
*** NO DISCHARGE ☐ ***

NOTE: Read instructions before completing this form.

PARAMETER (32-37)		(3 Card Only) (46-53) QUANTITY OR LOADING (54-61) AVERAGE	MAXIMUM	UNITS	(4 Card Only) (38-45) QUALITY OR CONCENTRATION (46-53) MINIMUM	AVERAGE	MAXIMUM	UNITS	NO. EX (62-63)	FREQUENCY OF ANALYSIS (64-68)	SAMPLE TYPE (69-70)
WHOLE EFFLUENT TOXICITY 22414 1 0 1 EFFLUENT GROSS VALUE	SAMPLE MEASUREMENT	******	******	----	100.00	100.00	******	(23) PER-CENT	0	QTRLY	COMP24
	PERMIT REQUIREMENT	******	******	****	REPORT 7 DA MN	REPORT MO AV MN	******			QTRLY	COMP24
	SAMPLE MEASUREMENT										
	PERMIT REQUIREMENT										
	SAMPLE MEASUREMENT										
	PERMIT REQUIREMENT										
	SAMPLE MEASUREMENT										
	PERMIT REQUIREMENT										
	SAMPLE MEASUREMENT										
	PERMIT REQUIREMENT										
	SAMPLE MEASUREMENT										
	PERMIT REQUIREMENT										
	SAMPLE MEASUREMENT										
	PERMIT REQUIREMENT										

NAME / TITLE PRINCIPAL EXECUTIVE OFFICER
R.P. Smith
Vice-President/General Mgr.
TYPED OR PRINTED

I certify under penalty of law that this document and all attachments were prepared under my direction or supervision in accordance with a system designed to assure that qualified personnel properly gather and evaluate the information submitted. Based on my inquiry of the person or persons who manage the system, or those persons directly responsible for gathering the information, the information submitted is, to the best of my knowledge and belief, true, accurate, and complete. I am aware that there are significant penalties for submitting false information, including the possibility of fine and imprisonment for knowing violations.

SIGNATURE OF PRINCIPAL EXECUTIVE OFFICER OR AUTHORIZED AGENT

TELEPHONE: 361 987-7000 (area code NUMBER)
DATE: 02 | 10 | 14 (YEAR | MO | DAY)

Forms by ChemSW (707) 864-0845; p/n 11090cmr; v5.20; 1/1/04

COMMENT AND EXPLANATION OF ANY VIOLATIONS (Reference all attachments here)

TPDES PERMIT 02436

This is a 4-part form.

VP0614
EPA/FOIA2018-00215
CWA-Appendix G

PERMITTEE NAME/ADDRESS: (Include Facility Name/Location if different)
NAME: FORMOSA PLASTICS CORP., TEXAS
ADDRESS: P.O. BOX 700
POINT COMFORT, TX 77978

FACILITY: FORMOSA PLASTIC CORP USA

LOCATION: POINT COMFORT TX 77978

ATTN: R. P. Smith, Vice-President/General Mgr.

NATIONAL POLLUTANT DISCHARGE ELIMINATION SYSTEM (NPDES)
DISCHARGE MONITORING REPORT (DMR)

TX 0085570 — PERMIT NUMBER (2-16)

TXA Q — DISCHARGE NUMBER (17-19)

MONITORING PERIOD

	YEAR	MO	DAY		YEAR	MO	DAY
FROM	02	07	01	TO	02	09	30
	(20-21)	(22-23)	(24-25)		(26-27)	(28-29)	(30-31)

MAJOR

F-FINAL

QUARTERLY 24-HR ACUTE TOXICITY

*** NO DISCHARGE ☐ ***

NOTE: Read Instructions before completing this form.

PARAMETER (32-37)		QUANTITY OR LOADING (3 Card Only) (46-53) AVERAGE	(54-61) MAXIMUM	UNITS	QUALITY OR CONCENTRATION (4 Card Only) (38-45) MINIMUM	(46-53) AVERAGE	(54-61) MAXIMUM	UNITS	NO. EX (62-63)	FREQUENCY OF ANALYSIS (64-68)	SAMPLE TYPE (69-70)
LC50/PF STAT 24HR AC U MYSID. BAHIA TIE3E 1 0 0 EFFLUENT GROSS VALUE	SAMPLE MEASUREMENT	******	******	----	******	0	******	(9A)	0	QTRLY	COMP24
	PERMIT REQUIREMENT	******	******	****	******	REPORT SINGSAMP	******	PASS=0 FAIL=1		QTRLY	COMP24
	SAMPLE MEASUREMENT										
	PERMIT REQUIREMENT										
	SAMPLE MEASUREMENT										
	PERMIT REQUIREMENT										
	SAMPLE MEASUREMENT										
	PERMIT REQUIREMENT										
	SAMPLE MEASUREMENT										
	PERMIT REQUIREMENT										
	SAMPLE MEASUREMENT										
	PERMIT REQUIREMENT										
	SAMPLE MEASUREMENT										
	PERMIT REQUIREMENT										

NAME / TITLE PRINCIPAL EXECUTIVE OFFICER
R.P. Smith
Vice-President/General Mgr.
TYPED OR PRINTED

I certify under penalty of law that this document and all attachments were prepared under my direction or supervision in accordance with a system designed to assure that qualified personnel properly gather and evaluate the information submitted. Based on my inquiry of the person or persons who manage the system, or those persons directly responsible for gathering the information, the information submitted is, to the best of my knowledge and belief, true, accurate, and complete. I am aware that there are significant penalties for submitting false information, including the possibility of fine and imprisonment for knowing violations.

SIGNATURE OF PRINCIPAL EXECUTIVE OFFICER OR AUTHORIZED AGENT

TELEPHONE: area code NUMBER — 361 | 987-7000

DATE: YEAR | MO | DAY — 02 | 10 | 14

Forms by ChemSW(707)864-0645;pm11000dmr;v5.20;1/1/96

COMMENT AND EXPLANATION OF ANY VIOLATIONS (Reference all attachments here)
(PASS=0 FAIL=1) REPORT PASS AS '0' OR REPORT FAIL AS '1' IN CONCENTRATION AVG. ABOVE.
TPDES PERMIT 02436

This is a 4-part form.

VP0614
EPA/FOIA2018-00216
CWA-Appendix G

FORMOSA PLASTICS CORPORATION, TEXAS

ISO-9002 CERTIFIED
ISO-14001 CERTIFIED

P. O. BOX 700
201 FORMOSA DRIVE
POINT COMFORT, TX 77978

PHONE: 361-987-7000
FAX: 361-987-2363

FILE

September 20, 2002

Certified Mail
7001-2510-0008-0641-7006

Ms. Debra Berry
U.S. Environmental Protection Agency
Compliance Assurance & Enforcement Division
Water Enforcement Branch (6 EN-WC)
1445 Ross Avenue
Dallas, TX 75202-2733

RE: TPDES Permit No. 02436
EPA ID No. TX0085570
Addendum to August 2002
Discharge Monitoring Reports

Dear Ms. Berry:

Enclosed are the Discharge Monitoring Reports for the month of August 2002. For the month of August 2002, there was one exceedance reported on the DMR for 1,2-Dichloroethane Daily Maximum Limit for Outfall 101.

In a letter dated August 14, 2002, Formosa reported that the limit for 1,2-Dichloroethane Daily Maximum Limit was exceeded at internal Outfall 101. The 1,2-Dichloroethane Daily Maximum Limit value that was reported for the August 8, 2002 incident was 6.67 lbs./days. The permit Daily Maximum Limit for 1,2-Dichloroethane is 5.51 lbs./day. Initial notifications were made to Ms. Debra Berry, EPA, on August 12, 2002.

As required by the current discharge permit, the FPC Combined Wastewater Treatment facility sampled Outfall 101 on August 8, 2002 by taking a routine 24 Hr. Composite sample for monitoring purposes. After Technical Department completed composite sample analysis, it was found that the sample was 6.67 lbs./day compared to the Daily Maximum Limit of 5.51 lbs./day. Per standard operating procedures, appropriate actions were taken to correct the situation, as stated in the letter dated August 14, 2002.

While addressing the 1,2-Dichloroethane issue at internal Outfall 101, FPC personnel monitored the level of 1,2-Dichloroethane at Outfall 001. During this time period, Outfall 001's 1,2-Dichloroethane level stayed within the permit required Daily Maximum Limit of 5.97 lbs./day. Based on this information, there was no offsite impact as a result of this incident.

Should you require additional information or assistance, please contact Monique Wells, at (361) 987-7463. b(7)(c)

Sincerely,

R. P. Smith
Vice President/General Manager
Formosa Plastics Corporation, Texas

Enclosure

NAME: FORMOSA PLASTICS CORP USA
ADDRESS: P.O. BOX 400
POINT COMFORT TX 77978

FACILITY: FORMOSA PLASTIC CORP USA

LOCATION: POINT COMFORT TX 77978
ATTN: R. P. Smith, Vice-President/General Mgr.

DISCHARGE MONITORING REPORT (DMR)

TX0085570	101 A
PERMIT NUMBER (2-16)	DISCHARGE NUMBER (17-19)

MONITORING PERIOD

	YEAR	MO	DAY		YEAR	MO	DAY
FROM	02	08	01	TO	02	08	31
	(20-21)	(22-23)	(24-25)		(26-27)	(28-29)	(30-31)

MAJOR

F-FINAL

TREATED PROCESS WASTEWATER

*** NO DISCHARGE ☐ ***

NOTE: Read instructions before completing this form.

PARAMETER (32-37)		(3 Card Only) (46-53) AVERAGE	QUANTITY OR LOADING (54-61) MAXIMUM	UNITS	(4 Card Only) (38-45) MINIMUM	QUALITY OR CONCENTRATION (46-53) AVERAGE	(54-61) MAXIMUM	UNITS	NO. EX (42-45)	FREQUENCY OF ANALYSIS (64-68)	SAMPLE TYPE (69-70)
CHLOROBENZENE	SAMPLE MEASUREMENT	0.00	0.00	(26)	******	******	******		0	TWICE/ WEEK	COMPOS
34301 J 0 0 INTMD TRT, PRCS CMPLT	PERMIT REQUIREMENT	0.39 DAILY AV	0.73 DAILY MX	LBS/DY	******	******	******	---- ****		TWICE/ WEEK	COMPOS
METHYL CHLORIDE	SAMPLE MEASUREMENT	0.00	0.00	(26)	******	******	******		0	TWICE/ WEEK	COMPOS
34418 J 0 0 INTMD TRT, PRCS CMPLT	PERMIT REQUIREMENT	2.25 DAILY AV	4.98 DAILY MX	LBS/DY	******	******	******	---- ****		TWICE/ WEEK	COMPOS
METHYLENE CHLORIDE, SUSPENDED	SAMPLE MEASUREMENT	0.00	0.00	(26)	******	******	******		0	TWICE/ WEEK	COMPOS
34425 J 0 0 INTMD TRT, PRCS CMPLT	PERMIT REQUIREMENT	1.04 DAILY AV	2.32 DAILY MX	LBS/DY	******	******	******	---- ****		TWICE/ WEEK	COMPOS
TETRACHLOROETHYLENE	SAMPLE MEASUREMENT	0.00	0.00	(26)	******	******	******		0	TWICE/ WEEK	COMPOS
34475 J 0 0 INTMD TRT, PRCS CMPLT	PERMIT REQUIREMENT	0.57 DAILY AV	1.46 DAILY MX	LBS/DY	******	******	******	---- ****		TWICE/ WEEK	COMPOS
1,1-DICHLOROETHANE	SAMPLE MEASUREMENT	0.00	0.00	(26)	******	******	******		0	TWICE/ WEEK	COMPOS
34496 J 0 0 INTMD TRT, PRCS CMPLT	PERMIT REQUIREMENT	0.57 DAILY AV	1.54 DAILY MX	LBS/DY	******	******	******	---- ****		TWICE/ WEEK	COMPOS
1,1,1-TRICHLORO-E[illegible]NE	SAMPLE MEASUREMENT	0.00	0.00	(26)	******	******	******		0	TWICE/ WEEK	COMPOS
34506 J 0 0 INTMD TRT, PRCS CMPLT	PERMIT REQUIREMENT	0.55 DAILY AV	1.41 DAILY MX	LBS/DY	******	******	******	---- ****		TWICE/ WEEK	COMPOS
1,2-DICHLOROETHANE TOTAL WEIGHT	SAMPLE MEASUREMENT	0.99	6.67	(26)	******	0.09	0.70	(19)	1	TWICE/ WEEK	COMPOS
34531 J 0 0 INTMD TRT, PRCS CMPLT	PERMIT REQUIREMENT	1.78 DAILY AV	5.51 DAILY MX	LBS/DY	******	REPORT DAILY AV	REPORT DAILY MX	MG/L		TWICE/ WEEK	COMPOS

NAME / TITLE PRINCIPAL EXECUTIVE OFFICER

R.P. Smith

Vice-President/General Mgr.

TYPED OR PRINTED

I certify under penalty of law that this document and all attachments were prepared under my direction or supervision in accordance with a system designed to assure that qualified personnel properly gather and evaluate the information submitted. Based on my inquiry of the person or persons who manage the system, or those persons directly responsible for gathering the information, the information submitted is, to the best of my knowledge and belief, true, accurate, and complete. I am aware that there are significant penalties for submitting false information, including the possibility of fine and imprisonment for knowing violations.

SIGNATURE OF PRINCIPAL EXECUTIVE OFFICER OR AUTHORIZED AGENT

TELEPHONE	DATE
361| 987-7000	02	09	09
area code NUMBER	YEAR	MO	DAY

COMMENT AND EXPLANATION OF ANY VIOLATIONS (Reference all attachments here)

1,2-DICHLOROETHANE DAILY MAXIMUM EXCEEDANCE (08 AUG 02) REPORTED BY TELEPHONE WITH FOLLOW-UP LETTER.

TPDES 02436

Forms by ChemSW(707)864-0645;p/n110900/rev5.20;11/98

This is a 4-part form.

VP0614
EPA/FOIA2018-00219
CWA-Appendix G

PERMITTEE NAME/ADDRESS: (Include Facility Name/Location if different)
NAME: FORMOSA PLASTICS CORP., TEXAS
ADDRESS: P.O. BOX 700
POINT COMFORT, TX 77978

FACILITY: FORMOSA PLASTIC CORP USA

LOCATION: POINT COMFORT TX 77978

ATTN: R. P. Smith, Vice-President/General Mgr.

NATIONAL POLLUTANT DISCHARGE ELIMINATION SYSTEM (NPDES)
DISCHARGE MONITORING REPORT (DMR)

TX 0085570	TX1 Q
PERMIT NUMBER (2-16)	DISCHARGE NUMBER (17-19)

MONITORING PERIOD

	YEAR	MO	DAY		YEAR	MO	DAY
FROM	02	04	01	TO	02	06	30
	(20-21)	(22-23)	(24-25)		(26-27)	(28-29)	(30-31)

MAJOR

F-FINAL

QUARTERLY REPORTING - 001

*** NO DISCHARGE ☐ ***

NOTE: Read instructions before completing this form.

PARAMETER (32-37)		(3 Card Only) (46-53) QUANTITY OR LOADING (54-61) AVERAGE	MAXIMUM	UNITS	(4 Card Only) (38-45) QUALITY OR CONCENTRATION (46-53) MINIMUM	AVERAGE	(54-61) MAXIMUM	UNITS	NO. EX (62-63)	FREQUENCY OF ANALYSIS (64-68)	SAMPLE TYPE (69-70)
WHOLE EFFLUENT TOXICITY 22414 1 0 1 EFFLUENT GROSS VALUE	SAMPLE MEASUREMENT	******	******	----	100.00	100.00	******	(23) PER-CENT	0	QTRLY	COMP24
	PERMIT REQUIREMENT	******	******	****	REPORT 7 DA MIN	REPORT MO AV MN	******			QTRLY	COMP24
	SAMPLE MEASUREMENT										
	PERMIT REQUIREMENT										
	SAMPLE MEASUREMENT										
	PERMIT REQUIREMENT										
	SAMPLE MEASUREMENT										
	PERMIT REQUIREMENT										
	SAMPLE MEASUREMENT										
	PERMIT REQUIREMENT										
	SAMPLE MEASUREMENT										
	PERMIT REQUIREMENT										
	SAMPLE MEASUREMENT										
	PERMIT REQUIREMENT										

NAME / TITLE PRINCIPAL EXECUTIVE OFFICER			TELEPHONE	DATE
R.P. Smith Vice-President/General Mgr. TYPED OR PRINTED	I certify under penalty of law that this document and all attachments were prepared under my direction or supervision in accordance with a system designed to assure that qualified personnel properly gather and evaluate the information submitted. Based on my inquiry of the person or persons who manage the system, or those persons directly responsible for gathering the information, the information submitted is, to the best of my knowledge and belief, true, accurate, and complete. I am aware that there are significant penalties for submitting false information, including the possibility of fine and imprisonment for knowing violations.	SIGNATURE OF PRINCIPAL EXECUTIVE OFFICER OR AUTHORIZED AGENT	361 | 987-7000 area code NUMBER	02 | 07 | 31 YEAR | MO | DAY

Forms by ChemSW(707)884-0845:p/n11090dmr;v5.20;1/1/96

COMMENT AND EXPLANATION OF ANY VIOLATIONS (Reference all attachments here)

TPDES PERMIT 02436

This is a 4-part form.

VP0614
EPA/FOIA2018-00220
CWA-Appendix G

PERMITTEE NAME/ADDRESS: (Include Facility Name/Location if different)
NAME: FORMOSA PLASTICS CORP., TEXAS
ADDRESS: P.O. BOX 700
POINT COMFORT, TX 77978

FACILITY: FORMOSA PLASTIC CORP USA

LOCATION: POINT COMFORT TX 77978
ATTN: R. P. Smith, Vice-President/General Mgr.

NATIONAL POLLUTANT DISCHARGE ELIMINATION SYSTEM (NPDES)
DISCHARGE MONITORING REPORT (DMR)

TX 0085570	TXA Q
PERMIT NUMBER (2-16)	DISCHARGE NUMBER (17-19)

MONITORING PERIOD

	YEAR	MO	DAY		YEAR	MO	DAY
FROM	02	04	01	TO	02	06	30
	(20-21)	(22-23)	(24-25)		(26-27)	(28-29)	(30-31)

MAJOR

F-FINAL

QUARTERLY 24-HR ACUTE TOXICITY

*** NO DISCHARGE ☐ ***

NOTE: Read instructions before completing this form.

PARAMETER (32-37)		(3 Card Only) (48-53) QUANTITY OR LOADING (54-61) AVERAGE	MAXIMUM	UNITS	(4 Card Only) (38-45) QUALITY OR CONCENTRATION (46-53) MINIMUM	AVERAGE	MAXIMUM	UNITS	NO. EX (62-63)	FREQUENCY OF ANALYSIS (64-68)	SAMPLE TYPE (69-70)
LC50/PF STAT 24HR AC U MYSID. BAHIA TIE3E 1 0 0 EFFLUENT GROSS VALUE	SAMPLE MEASUREMENT	******	******		******	0	******	(9A)	0	QTRLY	COMP24
	PERMIT REQUIREMENT	******	******	**** ****	******	REPORT SINGSAMP	******	PASS=0 FAIL=1		QTRLY	COMP24
	SAMPLE MEASUREMENT										
	PERMIT REQUIREMENT										
	SAMPLE MEASUREMENT										
	PERMIT REQUIREMENT										
	SAMPLE MEASUREMENT										
	PERMIT REQUIREMENT										
	SAMPLE MEASUREMENT										
	PERMIT REQUIREMENT										
	SAMPLE MEASUREMENT										
	PERMIT REQUIREMENT										
	SAMPLE MEASUREMENT										
	PERMIT REQUIREMENT										

NAME / TITLE PRINCIPAL EXECUTIVE OFFICER
R.P. Smith
Vice-President/General Mgr.
TYPED OR PRINTED

I certify under penalty of law that this document and all attachments were prepared under my direction or supervision in accordance with a system designed to assure that qualified personnel properly gather and evaluate the information submitted. Based on my inquiry of the person or persons who manage the system, or those persons directly responsible for gathering the information, the information submitted is, to the best of my knowledge and belief, true, accurate, and complete. I am aware that there are significant penalties for submitting false information, including the possibility of fine and imprisonment for knowing violations.

SIGNATURE OF PRINCIPAL EXECUTIVE OFFICER OR AUTHORIZED AGENT

TELEPHONE: 361 | 987-7000 (area code NUMBER)

DATE: 02 | 07 | 31 (YEAR | MO | DAY)

COMMENT AND EXPLANATION OF ANY VIOLATIONS (Reference all attachments here)
(PASS=0 FAIL=1) REPORT PASS AS '0' OR REPORT FAIL AS '1' IN CONCENTRATION AVG. ABOVE.
TPDES PERMIT 02436

Forms by ChemSW(707)864-0645;p/n110900dmr;v5.20;1/1/98

This is a 4-part form

VP0614

EPA/FOIA2018-00221

CWA-Appendix G

PERMITTEE NAME/ADDRESS: *(Include Facility Name/Location if different)*

NAME: FORMOSA PLASTICS CORP USA

ADDRESS: P.O. BOX 400

POINT COMFORT TX 77978

FACILITY: FORMOSA PLASTIC CORP USA

LOCATION: POINT COMFORT TX 77978

ATTN: R. P. Smith, Vice-President/General Mgr.

NATIONAL POLLUTANT DISCHARGE ELIMINATION SYSTEM *(NPDES)*

DISCHARGE MONITORING REPORT *(DMR)*

TX0085570	TX1 S
PERMIT NUMBER (2-16)	DISCHARGE NUMBER (17-19)

MONITORING PERIOD

	YEAR	MO	DAY		YEAR	MO	DAY
FROM	02	01	01	TO	02	06	30
	(20-21)	(22-23)	(24-25)		(26-27)	(28-29)	(30-31)

MAJOR

F-FINAL

1/6 MONTHS CHRONIC TOXICITY

*** NO DISCHARGE ☐ ***

NOTE: Read Instructions before completing this form.

PARAMETER (32-37)		QUANTITY OR LOADING AVERAGE	QUANTITY OR LOADING MAXIMUM	QUANTITY OR LOADING UNITS	QUANTITY OR CONCENTRATION MINIMUM	QUANTITY OR CONCENTRATION AVERAGE	QUANTITY OR CONCENTRATION MAXIMUM	QUANTITY OR CONCENTRATION UNITS	NO. EX (62-63)	FREQUENCY OF ANALYSIS (64-68)	SAMPLE TYPE (69-70)
LF P/F LETH STATRE 7 DAY CHR MYSID. BAHIA TLP3E 1 0 0 EFFLUENT GROSS VALUE	SAMPLE MEASUREMENT	*******	******		0	0	*******	(9A)	0	ONCE/ 6MONTH	COMPOS
	PERMIT REQUIREMENT	*******	******	****	REPORT 7 DA MIN	REPORT MO AV MN	*******	PASS=0 FAIL=1		ONCE/ 6MONTH	COMPOS
LF P/F LETH STATRE 7 DAY CHR MENIDIA TLP6B 1 0 0 EFFLUENT GROSS VALUE	SAMPLE MEASUREMENT	*******	******		0	0	*******	(9A)	0	ONCE/ 6MONTH	COMPOS
	PERMIT REQUIREMENT	*******	******	****	REPORT 7 DA MIN	REPORT MO AV MN	*******	PASS=0 FAIL=1		ONCE/ 6MONTH	COMPOS
NOEL LETHAL STATRE 7 DAY CHR MYSID. BAHIA TOP3E 1 0 0 EFFLUENT GROSS VALUE	SAMPLE MEASUREMENT	*******	******		11	11	*******	(23)	0	ONCE/ 6MONTH	COMPOS
	PERMIT REQUIREMENT	*******	******	****	REPORT 7 DA MIN	REPORT MO AV MN	*******	PER-CENT		ONCE/ 6MONTH	COMPOS
NOEL LETHAL STATRE 7 DAY CHR MENIDIA TOP6B 1 0 0 EFFLUENT GROSS VALUE	SAMPLE MEASUREMENT	*******	******		13	13	*******	(23)	0	ONCE/ 6MONTH	COMPOS
	PERMIT REQUIREMENT	*******	******	****	REPORT 7 DA MIN	REPORT MO AV MN	*******	PER-CENT		ONCE/ 6MONTH	COMPOS
NOEL SUB-LETH STATRE 7 DAY CHR MYSID. BAHIA TPP3E 1 0 0 EFFLUENT GROSS VALUE	SAMPLE MEASUREMENT	*******	******		11	11	*******	(23)	0	ONCE/ 6MONTH	COMPOS
	PERMIT REQUIREMENT	*******	******	****	REPORT 7 DA MIN	REPORT MO AV MN	*******	PER-CENT		ONCE/ 6MONTH	COMPOS
NOEL SUB-LETH STATRE 7 DAY CHR MENIDIA TPP6B 1 0 0 EFFLUENT GROSS VALUE	SAMPLE MEASUREMENT	*******	******		13	13	*******	(23)	0	ONCE/ 6MONTH	COMPOS
	PERMIT REQUIREMENT	*******	******	**** ****	REPORT 7 DA MIN	REPORT MO AV MN	*******	PER-CENT		ONCE/ 6MONTH	COMPOS
WHOLE EFFLUENT TOXICITY 22414 1 0 0 EFFLUENT GROSS VALUE	SAMPLE MEASUREMENT	*******	******		78	78	*******	(23)	0	ONCE/ 6MONTH	COMPOS
	PERMIT REQUIREMENT	*******	******	**** ****	10 7 DA MIN	10 MO AV MN	*******	PER-CENT		ONCE/ 6MONTH	COMPOS

NAME / TITLE PRINCIPAL EXECUTIVE OFFICER

R.P. Smith

Vice-President/General Mgr.

TYPED OR PRINTED

I certify under penalty of law that this document and all attachments were prepared under my direction or supervision in accordance with a system designed to assure that qualified personnel properly gather and evaluate the information submitted. Based on my inquiry of the person or persons who manage the system, or those persons directly responsible for gathering the information, the information submitted is, to the best of my knowledge and belief, true, accurate, and complete. I am aware that there are significant penalties for submitting false information, including the possibility of fine and imprisonment for knowing violations.

SIGNATURE OF PRINCIPAL EXECUTIVE OFFICER OR AUTHORIZED AGENT

TELEPHONE: area code NUMBER 361| 987-7000

DATE: YEAR | MO | DAY 02 | 07 | 05

COMMENT AND EXPLANATION OF ANY VIOLATIONS *(Reference all attachments here)*

(PASS=0 , FAIL=1) REPORT PASS AS '0' REPORT FAIL AS '1' IN CONCENTRATION AVG. ABOVE.

Forms by ChemSW(707)684-0845:p/n11090dmr;v5.20;1/1/06

VP0614

EPA/FOIA2018-00222

CWA-Appendix G

PERMITTEE NAME/ADDRESS: (Include Facility Name/Location if different)

NAME: FORMOSA PLASTICS CORP USA

ADDRESS: P.O. BOX 400

POINT COMFORT TX 77978

FACILITY: FORMOSA PLASTIC CORP USA

LOCATION: POINT COMFORT TX 77978

ATTN: R. P. Smith, Vice-President/General Mgr.

NATIONAL POLLUTANT DISCHARGE ELIMINATION SYSTEM (NPDES)

DISCHARGE MONITORING REPORT (DMR)

TX0085570	TXA S
PERMIT NUMBER (2-16)	DISCHARGE NUMBER (17-19)

MONITORING PERIOD

	YEAR	MO	DAY		YEAR	MO	DAY
FROM	02	01	01	TO	02	06	30
	(20-21)	(22-23)	(24-25)		(26-27)	(28-29)	(30-31)

MAJOR

F-FINAL

1/6 MONTHS 24HR ACUTE TOXICITY

*** NO DISCHARGE ☐ ***

NOTE: Read Instructions before completing this form.

PARAMETER (32-37)		QUANTITY OR LOADING AVERAGE	QUANTITY OR LOADING MAXIMUM	UNITS	QUANTITY OR CONCENTRATION MINIMUM	QUANTITY OR CONCENTRATION AVERAGE	QUANTITY OR CONCENTRATION MAXIMUM	UNITS	NO. EX	FREQUENCY OF ANALYSIS	SAMPLE TYPE
LC50/PF STAT 24 HR AC U MENIDIA TIE6B 1 0 0 EFFLUENT GROSS VALUE	SAMPLE MEASUREMENT	*******	******		******	100	*******	(9A)	0	ONCE/ 6MONTH	COMP24
	PERMIT REQUIREMENT	******	******	---- ****	******	REPORT SINGSAMP	*******	PASS=0 FAIL=1		ONCE/ 6MONTH	COMP24
	SAMPLE MEASUREMENT										
	PERMIT REQUIREMENT										
	SAMPLE MEASUREMENT										
	PERMIT REQUIREMENT										
	SAMPLE MEASUREMENT										
	PERMIT REQUIREMENT										
	SAMPLE MEASUREMENT										
	PERMIT REQUIREMENT										
	SAMPLE MEASUREMENT										
	PERMIT REQUIREMENT										
	SAMPLE MEASUREMENT										
	PERMIT REQUIREMENT										

NAME / TITLE PRINCIPAL EXECUTIVE OFFICER

R.P. Smith

Vice-President/General Mgr.

TYPED OR PRINTED

I certify under penalty of law that this document and all attachments were prepared under my direction or supervision in accordance with a system designed to assure that qualified personnel properly gather and evaluate the information submitted. Based on my inquiry of the person or persons who manage the system, or those persons directly responsible for gathering the information, the information submitted is, to the best of my knowledge and belief, true, accurate, and complete. I am aware that there are significant penalties for submitting false information, including the possibility of fine and imprisonment for knowing violations.

SIGNATURE OF PRINCIPAL EXECUTIVE OFFICER OR AUTHORIZED AGENT

TELEPHONE: 361| 987-7000 (area code NUMBER)

DATE: 02 | 07 | 05 (YEAR | MO | DAY)

COMMENT AND EXPLANATION OF ANY VIOLATIONS (Reference all attachments here)

(PASS=0 FAIL=1) REPORT PASS AS '0' REPORT FAIL AS '1' IN CONCENTRATION AVG. ABOVE.

Forms by ChemSW(707)884-0845;p/n11090dmr;v5.20;1/1/98

VP0614

EPA/FOIA2018-00223

CWA-Appendix G

PERMITTEE NAME/ADDRESS: (Include Facility Name/Location if different)

NAME: FORMOSA PLASTICS CORP., TEXAS

ADDRESS: P.O. BOX 700

POINT COMFORT, TX 77978

FACILITY: FORMOSA PLASTIC CORP USA

LOCATION: POINT COMFORT TX 77978

ATTN: R. P. Smith, Vice-President/General Mgr.

NATIONAL POLLUTANT DISCHARGE ELIMINATION SYSTEM (NPDES)

DISCHARGE MONITORING REPORT (DMR)

TX 0085570	TX1 Q
PERMIT NUMBER (2-16)	DISCHARGE NUMBER (17-19)

MONITORING PERIOD

	YEAR	MO	DAY		YEAR	MO	DAY
FROM	02	04	01	TO	02	06	26
	(20-21)	(22-23)	(24-25)		(26-27)	(28-29)	(30-31)

MAJOR

F-FINAL

QUARTERLY REPORTING - 001

*** NO DISCHARGE ☐ ***

NOTE: Read instructions before completing this form.

PARAMETER (32-37)		(3 Card Only) (46-53) QUANTITY OR LOADING (54-61) AVERAGE	MAXIMUM	UNITS	(4 Card Only) (38-45) QUALITY OR CONCENTRATION (46-53) MINIMUM	AVERAGE	MAXIMUM	UNITS	NO. EX (62-63)	FREQUENCY OF ANALYSIS (64-68)	SAMPLE TYPE (69-70)
WHOLE EFFLUENT TOXICITY 22414 1 0 1 EFFLUENT GROSS VALUE	SAMPLE MEASUREMENT	******	******	****	100.00	100.00	******	(23) PER-CENT	0	QTRLY	COMP24
	PERMIT REQUIREMENT	******	******	****	REPORT 7 DA MIN	REPORT MO AV MN	******			QTRLY	COMP24
	SAMPLE MEASUREMENT										
	PERMIT REQUIREMENT										
	SAMPLE MEASUREMENT										
	PERMIT REQUIREMENT										
	SAMPLE MEASUREMENT										
	PERMIT REQUIREMENT										
	SAMPLE MEASUREMENT										
	PERMIT REQUIREMENT										
	SAMPLE MEASUREMENT										
	PERMIT REQUIREMENT										
	SAMPLE MEASUREMENT										
	PERMIT REQUIREMENT										

NAME / TITLE PRINCIPAL EXECUTIVE OFFICER

R.P. Smith

Vice-President/General Mgr.

TYPED OR PRINTED

I certify under penalty of law that this document and all attachments were prepared under my direction or supervision in accordance with a system designed to assure that qualified personnel properly gather and evaluate the information submitted. Based on my inquiry of the person or persons who manage the system, or those persons directly responsible for gathering the information, the information submitted is, to the best of my knowledge and belief, true, accurate, and complete. I am aware that there are significant penalties for submitting false information, including the possibility of fine and imprisonment for knowing violations.

SIGNATURE OF PRINCIPAL EXECUTIVE OFFICER OR AUTHORIZED AGENT

TELEPHONE: 361 | 987-7000 (area code NUMBER)

DATE: 02 | 07 | 05 (YEAR | MO | DAY)

COMMENT AND EXPLANATION OF ANY VIOLATIONS

(Reference all attachments here)

TPDES PERMIT 02436

Forms by ChemSW(707)864-0845;p/n11000dmr;v5.20;1/1/06

This is a 4-part form.

VP0614

EPA/FOIA2018-00224

CWA-Appendix G

PERMITTEE NAME/ADDRESS: (Include Facility Name/Location if different)
NAME: FORMOSA PLASTICS CORP., TEXAS
ADDRESS: P.O. BOX 700
POINT COMFORT, TX 77978

FACILITY: FORMOSA PLASTIC CORP USA

LOCATION: POINT COMFORT TX 77978
ATTN: R. P. Smith, Vice-President/General Mgr.

NATIONAL POLLUTANT DISCHARGE ELIMINATION SYSTEM (NPDES)
DISCHARGE MONITORING REPORT (DMR)

TX 0085570 (2-16) PERMIT NUMBER
TXA Q (17-19) DISCHARGE NUMBER

MONITORING PERIOD
FROM YEAR 02 (20-21) MO 04 (22-23) DAY 01 (24-25) TO YEAR 02 (26-27) MO 06 (28-29) DAY 26 (30-31)

MAJOR
F-FINAL
QUARTERLY 24-HR ACUTE TOXICITY
*** NO DISCHARGE ☐ ***

NOTE: Read instructions before completing this form.

PARAMETER (32-37)		(3 Card Only) (46-53) QUANTITY OR LOADING (54-61) AVERAGE	MAXIMUM	UNITS	(4 Card Only) (38-45) QUALITY OR CONCENTRATION (46-53) MINIMUM	(54-61) AVERAGE	MAXIMUM	UNITS	NO. EX (42-43)	FREQUENCY OF ANALYSIS (64-68)	SAMPLE TYPE (69-70)
LC50/PF STAT 24HR AC U MYSID. BAHIA TIE3E 1 0 0 EFFLUENT GROSS VALUE	SAMPLE MEASUREMENT	******	******	----	******	0	******	(9A)	0	QTRLY	COMP24
	PERMIT REQUIREMENT	******	******	****	******	REPORT SINGSAMP	******	PASS=0 FAIL=1		QTRLY	COMP24
	SAMPLE MEASUREMENT										
	PERMIT REQUIREMENT										
	SAMPLE MEASUREMENT										
	PERMIT REQUIREMENT										
	SAMPLE MEASUREMENT										
	PERMIT REQUIREMENT										
	SAMPLE MEASUREMENT										
	PERMIT REQUIREMENT										
	SAMPLE MEASUREMENT										
	PERMIT REQUIREMENT										
	SAMPLE MEASUREMENT										
	PERMIT REQUIREMENT										

NAME / TITLE PRINCIPAL EXECUTIVE OFFICER
R.P. Smith
Vice-President/General Mgr.
TYPED OR PRINTED

I certify under penalty of law that this document and all attachments were prepared under my direction or supervision in accordance with a system designed to assure that qualified personnel properly gather and evaluate the information submitted. Based on my inquiry of the person or persons who manage the system, or those persons directly responsible for gathering the information, the information submitted is, to the best of my knowledge and belief, true, accurate, and complete. I am aware that there are significant penalties for submitting false information, including the possibility of fine and imprisonment for knowing violations.

SIGNATURE OF PRINCIPAL EXECUTIVE OFFICER OR AUTHORIZED AGENT

TELEPHONE: area code 361 NUMBER 987-7000
DATE: YEAR 02 MO 07 DAY 05

COMMENT AND EXPLANATION OF ANY VIOLATIONS (Reference all attachments here)
(PASS=0 FAIL=1) REPORT PASS AS '0' OR REPORT FAIL AS '1' IN CONCENTRATION AVG. ABOVE.
TPDES PERMIT 02436

Forms by ChemSW(707)664-0845;p/n11090dmr;v5.20;1/1/96

This is a 4-part form.

VP0614
EPA/FOIA2018-00225
CWA-Appendix G

PERMITTEE NAME/ADDRESS: (Include Facility Name/Location if different)
NAME: FORMOSA PLASTICS CORP USA
ADDRESS: P.O. BOX 400
POINT COMFORT TX 77978

FACILITY: FORMOSA PLASTIC CORP USA

LOCATION: POINT COMFORT TX 77978
ATTN: R. P. Smith, Vice-President/General Mgr.

NATIONAL POLLUTANT DISCHARGE ELIMINATION SYSTEM (NPDES)
DISCHARGE MONITORING REPORT (DMR)

TX0085570	TX1 S
PERMIT NUMBER (2-16)	DISCHARGE NUMBER (17-19)

MONITORING PERIOD

	YEAR	MO	DAY		YEAR	MO	DAY
FROM	02	06	01	TO	02	06	30
	(20-21)	(22-23)	(24-25)		(26-27)	(28-29)	(30-31)

MAJOR

F-FINAL

1/6 MONTHS CHRONIC TOXICITY

*** NO DISCHARGE ☐ ***

NOTE: Read instructions before completing this form.

PARAMETER (32-37)		QUANTITY OR LOADING AVERAGE	QUANTITY OR LOADING MAXIMUM	UNITS	QUANTITY OR CONCENTRATION MINIMUM	QUANTITY OR CONCENTRATION AVERAGE	QUANTITY OR CONCENTRATION MAXIMUM	UNITS	NO. EX (62-63)	FREQUENCY OF ANALYSIS (64-68)	SAMPLE TYPE (69-70)
LF P/F LETH STATRE 7 DAY CHR MYSID. BAHIA TLP3E 1 0 0 EFFLUENT GROSS VALUE	SAMPLE MEASUREMENT	*******	******		0	0	*******	(9A)	0	ONCE/ 6MONTH	COMPOS
	PERMIT REQUIREMENT	*******	******	****	REPORT 7 DA MIN	REPORT MO AV MN	*******	PASS=0 FAIL=1		ONCE/ 6MONTH	COMPOS
LF P/F LETH STATRE 7 DAY CHR MENIDIA TLP6B 1 0 0 EFFLUENT GROSS VALUE	SAMPLE MEASUREMENT	*******	******		0	0	*******	(9A)	0	ONCE/ 6MONTH	CO S
	PERMIT REQUIREMENT	*******	******	****	REPORT 7 DA MIN	REPORT MO AV MN	*******	PASS=0 FAIL=1		ONCE/ 6MONTH	COMPOS
NOEL LETHAL STATRE 7 DAY CHR MYSID. BAHIA TOP3E 1 0 0 EFFLUENT GROSS VALUE	SAMPLE MEASUREMENT	*******	******		11	0	*******	(23)	0	ONCE/ 6MONTH	COMPOS
	PERMIT REQUIREMENT	*******	******	****	REPORT 7 DA MIN	REPORT MO AV MN	*******	PER-CENT		ONCE/ 6MONTH	COMPOS
NOEL LETHAL STATRE 7 DAY CHR MENIDIA TOP6B 1 0 0 EFFLUENT GROSS VALUE	SAMPLE MEASUREMENT	*******	******		13	0	*******	(23)	0	ONCE/ 6MONTH	COMPOS
	PERMIT REQUIREMENT	*******	******	****	REPORT 7 DA MIN	REPORT MO AV MN	*******	PER-CENT		ONCE/ 6MONTH	COMPOS
NOEL SUB-LETH STATRE 7 DAY CHR MYSID. BAHIA TPP3E 1 0 0 EFFLUENT GROSS VALUE	SAMPLE MEASUREMENT	*******	******		11	0	*******	(23)	0	ONCE/ 6MONTH	COMPOS
	PERMIT REQUIREMENT	*******	******	****	REPORT 7 DA MIN	REPORT MO AV MN	*******	PER-CENT		ONCE/ 6MONTH	COMPOS
NOEL SUB-LETH STATRE 7 DAY CHR MENIDIA TPP6B 1 0 0 EFFLUENT GROSS VALUE	SAMPLE MEASUREMENT	*******	******		13	0	*******	(23)	0	ONCE/ 6MONTH	CO S
	PERMIT REQUIREMENT	*******	******	**** ****	REPORT 7 DA MIN	REPORT MO AV MN	*******	PER-CENT		ONCE/ 6MONTH	COMPOS
WHOLE EFFLUENT TOXICITY 22414 1 0 0 EFFLUENT GROSS VALUE	SAMPLE MEASUREMENT	*******	******		78	78	*******	(23)	0	ONCE/ 6MONTH	COMPOS
	PERMIT REQUIREMENT	*******	******	**** ****	10 7 DA MIN	10 MO AV MN	*******	PER-CENT		ONCE/ 6MONTH	COMPOS

NAME / TITLE PRINCIPAL EXECUTIVE OFFICER
R.P. Smith
Vice-President/General Mgr.
TYPED OR PRINTED

I certify under penalty of law that this document and all attachments were prepared under my direction or supervision in accordance with a system designed to assure that qualified personnel properly gather and evaluate the information submitted. Based on my inquiry of the person or persons who manage the system, or those persons directly responsible for gathering the information, the information submitted is, to the best of my knowledge and belief, true, accurate, and complete. I am aware that there are significant penalties for submitting false information, including the possibility of fine and imprisonment for knowing violations.

SIGNATURE OF PRINCIPAL EXECUTIVE OFFICER OR AUTHORIZED AGENT

TELEPHONE: 361| 987-7000 (area code NUMBER)

DATE: 02 | 07 | 05 (YEAR | MO | DAY)

COMMENT AND EXPLANATION OF ANY VIOLATIONS (Reference all attachments here)
(PASS=0. FAIL=1) REPORT PASS AS '0' REPORT FAIL AS '1' IN CONCENTRATION AVG. ABOVE.

Forms by ChemSW(707)664-0845;p/n11090dmr;v5.20;1/1/98

VP0614

EPA/FOIA2018-00226

CWA-Appendix G

PERMITTEE NAME/ADDRESS: (Include Facility Name/Location if different)

NAME: FORMOSA PLASTICS CORP USA

ADDRESS: P.O. BOX 400

POINT COMFORT TX 77978

FACILITY: FORMOSA PLASTIC CORP USA

LOCATION: POINT COMFORT TX 77978

ATTN: R. P. Smith, Vice-President/General Mgr.

NATIONAL POLLUTANT DISCHARGE ELIMINATION SYSTEM (NPDES)

DISCHARGE MONITORING REPORT (DMR)

TX0085570	TXA S
PERMIT NUMBER (2-16)	DISCHARGE NUMBER (17-19)

MONITORING PERIOD

	YEAR	MO	DAY		YEAR	MO	DAY
FROM	02	06	01	TO	02	06	30
	(20-21)	(22-23)	(24-25)		(26-27)	(28-29)	(30-31)

MAJOR

F-FINAL

1/6 MONTHS 24HR ACUTE TOXICITY

*** NO DISCHARGE ☐ ***

NOTE: Read Instructions before completing this form.

PARAMETER (32-37)		QUANTITY OR LOADING AVERAGE	QUANTITY OR LOADING MAXIMUM	QUANTITY OR LOADING UNITS	QUANTITY OR CONCENTRATION MINIMUM	QUANTITY OR CONCENTRATION AVERAGE	QUANTITY OR CONCENTRATION MAXIMUM	QUANTITY OR CONCENTRATION UNITS	NO. EX	FREQUENCY OF ANALYSIS	SAMPLE TYPE
LC50/PF STAT 24 HR AC U MENIDIA TIE6B 1 0 0 EFFLUENT GROSS VALUE	SAMPLE MEASUREMENT	*******	******	****	******[1]	100	*******	(9A)	0	ONCE/ 6MONTH	COMP24
	PERMIT REQUIREMENT	*******	******	****	******	REPORT SINGSAMP	*******	PASS=0 FAIL=1		ONCE/ 6MONTH	COMP24
	SAMPLE MEASUREMENT										
	PERMIT REQUIREMENT										
	SAMPLE MEASUREMENT										
	PERMIT REQUIREMENT										
	SAMPLE MEASUREMENT										
	PERMIT REQUIREMENT										
	SAMPLE MEASUREMENT										
	PERMIT REQUIREMENT										
	SAMPLE MEASUREMENT										
	PERMIT REQUIREMENT										
	SAMPLE MEASUREMENT										
	PERMIT REQUIREMENT										

NAME / TITLE PRINCIPAL EXECUTIVE OFFICER

R.P. Smith

Vice-President/General Mgr.

TYPED OR PRINTED

I certify under penalty of law that this document and all attachments were prepared under my direction or supervision in accordance with a system designed to assure that qualified personnel properly gather and evaluate the information submitted. Based on my inquiry of the person or persons who manage the system, or those persons directly responsible for gathering the information, the information submitted is, to the best of my knowledge and belief, true, accurate, and complete. I am aware that there are significant penalties for submitting false information, including the possibility of fine and imprisonment for knowing violations.

SIGNATURE OF PRINCIPAL EXECUTIVE OFFICER OR AUTHORIZED AGENT

TELEPHONE: area code NUMBER 361 | 987-7000

DATE: YEAR | MO | DAY 02 | 07 | 05

COMMENT AND EXPLANATION OF ANY VIOLATIONS (Reference all attachments here)

(PASS=0 FAIL=1) REPORT PASS AS '0' REPORT FAIL AS '1' IN CONCENTRATION AVG. ABOVE.

Form1 by ChemSW(707)864-0845;pln11090dmr;v5.20;11/96

VP0614

EPA/FOIA2018-00227

CWA-Appendix G

PERMITTEE NAME/ADDRESS: (Include Facility Name/Location if different)

NAME: FORMOSA PLASTICS CORP., TEXAS
ADDRESS: P.O. BOX 700
POINT COMFORT, TX 77978

FACILITY: FORMOSA PLASTIC CORP USA

LOCATION: POINT COMFORT TX 77978
ATTN: R. P. Smith, Vice-President/General Mgr.

NATIONAL POLLUTANT DISCHARGE ELIMINATION SYSTEM (NPDES)
DISCHARGE MONITORING REPORT (DMR)

TX 0085570	TXA Q
PERMIT NUMBER (2-16)	DISCHARGE NUMBER (17-19)

MONITORING PERIOD

	YEAR	MO	DAY		YEAR	MO	DAY
FROM	02	01	01	TO	02	03	31
	(20-21)	(22-23)	(24-25)		(26-27)	(28-29)	(30-31)

MAJOR

F-FINAL
QUARTERLY 24-HR ACUTE TOXICITY

*** NO DISCHARGE ☐ ***

NOTE: Read instructions before completing this form.

PARAMETER (32-37)		(3 Card Only) (46-53) QUANTITY OR LOADING (54-61) AVERAGE	MAXIMUM	UNITS	(4 Card Only) (38-45) QUALITY OR CONCENTRATION (46-53) MINIMUM	AVERAGE	MAXIMUM	UNITS	NO. EX (62-63)	FREQUENCY OF ANALYSIS (64-68)	SAMPLE TYPE (69-70)
LC50/PF STAT 24HR AC U MYSID. BAHIA TIE3E 1 0 0 EFFLUENT GROSS VALUE	SAMPLE MEASUREMENT	******	******		******	0	******	(9A)	0	QTRLY	COMP24
	PERMIT REQUIREMENT	******	******	---- ****	******	REPORT SINGSAMP	******	PASS=0 FAIL=1		QTRLY	COMP24
	SAMPLE MEASUREMENT										
	PERMIT REQUIREMENT										
	SAMPLE MEASUREMENT										
	PERMIT REQ										
	SAMPLE MEASUREMENT										
	PERMIT REQUIREMENT										
	SAMPLE MEASUREMENT										
	PERMIT REQUIREMENT										
	SAMPLE MEASUREMENT										
	PERMIT REQUIREMENT										
	SAMPLE MEASUREMENT										
	PERMIT REQUIREMENT										

NAME / TITLE PRINCIPAL EXECUTIVE OFFICER
R.P. Smith
Vice-President/General Mgr.
TYPED OR PRINTED

I certify under penalty of law that this document and all attachments were prepared under my direction or supervision in accordance with a system designed to assure that qualified personnel properly gather and evaluate the information submitted. Based on my inquiry of the person or persons who manage the system, or those persons directly responsible for gathering the information, the information submitted is, to the best of my knowledge and belief, true, accurate, and complete. I am aware that there are significant penalties for submitting false information, including the possibility of fine and imprisonment for knowing violations.

SIGNATURE OF PRINCIPAL EXECUTIVE OFFICER OR AUTHORIZED AGENT

TELEPHONE: area code NUMBER 361 987-7000

DATE: YEAR MO DAY 02 04 09

COMMENT AND EXPLANATION OF ANY VIOLATIONS (Reference all attachments here)
(PASS=0 FAIL=1) REPORT PASS AS '0' OR REPORT FAIL AS '1' IN CON
TPDES PERMIT 02436

Forms by ChemSW(707)864-0845;pm11090dmr;v5.20;1/1/98

This is a 4-part form.

VP0614
EPA/FOIA2018-00228
CWA-Appendix G

PERMITTEE NAME/ADDRESS: (Include Facility Name/Location if different)
NAME: FORMOSA PLASTICS CORP., TEXAS
ADDRESS: P.O. BOX 700
POINT COMFORT, TX 77978

FACILITY: FORMOSA PLASTIC CORP USA

LOCATION: POINT COMFORT TX 77978
ATTN: R. P. Smith, Vice-President/General Mgr.

NATIONAL POLLUTANT DISCHARGE ELIMINATION SYSTEM (NPDES)
DISCHARGE MONITORING REPORT (DMR)

TX 0085570	TXA Q
PERMIT NUMBER (2-16)	DISCHARGE NUMBER (17-19)

MONITORING PERIOD

	YEAR	MO	DAY		YEAR	MO	DAY
FROM	02	01	01	TO	02	03	31
	(20-21)	(22-23)	(24-25)		(26-27)	(28-29)	(30-31)

MAJOR

F-FINAL

QUARTERLY 24-HR ACUTE TOXICITY

*** NO DISCHARGE ☐ ***

NOTE: Read Instructions before completing this form.

PARAMETER (32-37)		(3 Card Only) (46-53) QUANTITY OR LOADING (54-61) AVERAGE	MAXIMUM	UNITS	(4 Card Only) (38-45) QUALITY OR CONCENTRATION (46-53) (54-61) MINIMUM	AVERAGE	MAXIMUM	UNITS	NO. EX (62-63)	FREQUENCY OF ANALYSIS (64-68)	SAMPLE TYPE (69-70)
LC50/PF STAT 24HR AC U MYSID. BAHIA TIE3E 1 0 0 EFFLUENT GROSS VALUE	SAMPLE MEASUREMENT	******	******		******	0	******	(9A)	0	QTRLY	COMP24
	PERMIT REQUIREMENT	******	******	**** ****	******	REPORT SINGSAMP	******	PASS=0 FAIL=1		QTRLY	COMP24
	SAMPLE MEASUREMENT										
	PERMIT REQUIREMENT										
	SAMPLE MEASUREMENT										
	PERMIT REQUIREMENT										
	SAMPLE MEASUREMENT										
	PERMIT REQUIREMENT										
	SAMPLE MEASUREMENT										
	PERMIT REQUIREMENT										
	SAMPLE MEASUREMENT										
	PERMIT REQUIREMENT										
	SAMPLE MEASUREMENT										
	PERMIT REQUIREMENT										

NAME / TITLE PRINCIPAL EXECUTIVE OFFICER
R.P. Smith
Vice-President/General Mgr.
TYPED OR PRINTED

I certify under penalty of law that this document and all attachments were prepared under my direction or supervision in accordance with a system designed to assure that qualified personnel properly gather and evaluate the information submitted. Based on my inquiry of the person or persons who manage the system, or those persons directly responsible for gathering the information, the information submitted is, to the best of my knowledge and belief, true, accurate, and complete. I am aware that there are significant penalties for submitting false information, including the possibility of fine and imprisonment for knowing violations.

SIGNATURE OF PRINCIPAL EXECUTIVE OFFICER OR AUTHORIZED AGENT

TELEPHONE: area code 361 NUMBER 987-7000

DATE: 02 | 04 | 09 (YEAR | MO | DAY)

COMMENT AND EXPLANATION OF ANY VIOLATIONS (Reference all attachments here)
(PASS=0 FAIL=1) REPORT PASS AS '0' OR REPORT FAIL AS '1' IN CON
TPDES PERMIT 02436

Forms by ChemSW(707)864-0845:p/n11090dmr;v5.20;1/1/96

This is a 4-part form.

VP0614
EPA/FOIA2018-00229
CWA-Appendix G

FORMOSA PLASTICS CORPORATION, TEXAS

ISO-9002 CERTIFIED
ISO-14001 CERTIFIED

P. O. BOX 700
201 FORMOSA DRIVE
POINT COMFORT, TX 77978

PHONE: 361-987-7000
FAX: 361-987-2363

FILE

March 20, 2002

Certified Mail
7000-0600-0025-0380-7226

Ms. Debra Berry
U.S. Environmental Protection Agency
Compliance Assurance & Enforcement Division
Water Enforcement Branch (6 EN-WC)
1445 Ross Avenue
Dallas, TX 75202-2733

RE: TPDES Permit No. 02436
EPA ID No. TX0085570
Addendum to February 2002
Discharge Monitoring Reports

Dear Ms. Berry:

Enclosed are the Discharge Monitoring Reports for the month of February 2002. For the Month of February 2002, there was one discharge exceedance reported on the DMR for pH at internal Outfall 201.

In a letter dated February 27, 2002, Formosa reported that the limit for pH was exceeded at Outfall 201. The pH value that was reported for the February 21, 2002 incident was 3.79 s.u. The permit limit for pH at Outfall 201 is between 6.0 and 9.0 s.u. Initial notifications were made to Ms. Debra Berry, EPA, on February 21, 2002.

As required by the current discharge permit, the waste water treatment facility sampled Outfall 201 on February 21, 2002 by taking a grab sample of the effluent and analyzed it for pH. The results indicated that the pH was 3.79 s.u. Per standard operating procedures, the waste water facility took appropriate actions to correct the situation. The initial sample was taken at 14:07 hours and the pH was brought back into limits by 14:50 hours.

While addressing the pH issue at internal Outfall 201, FPC personnel monitored the pH at Outfall 001. During this time period, Outfall 001's pH stayed within the permit required

6.0 to 9.0 s.u. Based on this information, there was no offsite impact as a result of this incident.

Should you require additional information or assistance, please contact Monique Wells, at (361) 987-7463. b(7)(c)

Sincerely,

R. P. Smith
Vice President/General Manager
Formosa Plastics Corporation, Texas

PERMITTEE NAME/ADDRESS: (Include Facility Name/Location if different)
NAME: FORMOSA PLASTICS CORP USA
ADDRESS: P.O. BOX 400
POINT COMFORT TX 77978

FACILITY: FORMOSA PLASTIC CORP USA

LOCATION: POINT COMFORT TX 77978
ATTN: R. P. Smith, Vice-President/General Mgr.

NATIONAL POLLUTANT DISCHARGE ELIMINATION SYSTEM (NPDES)
DISCHARGE MONITORING REPORT (DMR)

TX0085570 (2-16) PERMIT NUMBER

201 A (17-19) DISCHARGE NUMBER

MAJOR

F-FINAL

TREATED AND COMBINED UTILITY

*** NO DISCHARGE ☐ ***

MONITORING PERIOD

	YEAR	MO	DAY		YEAR	MO	DAY
FROM	02	02	01	TO	02	02	27
	(20-21)	(22-23)	(24-25)		(26-27)	(28-29)	(30-31)

NOTE: Read Instructions before completing this form.

PARAMETER (32-37)		(3 Card Only) (46-53) QUANTITY OR LOADING (54-61) AVERAGE	MAXIMUM	UNITS	(4 Card Only) (38-45) QUALITY OR CONCENTRATION (46-53) MINIMUM	AVERAGE	MAXIMUM	UNITS	NO. EX (62-63)	FREQUENCY OF ANALYSIS (64-68)	SAMPL TYPE (69-70
BOD, 5-DAY (20 DEG. C) 00310 J 0 0 INTMD TRT, PRCS CMPLT	SAMPLE MEASUREMENT	143	289	(26)	******	5	9	(19)	0	TWICE/ WEEK	COMP
	PERMIT REQUIREMENT	304 DAILY AV	608 DAILY MX	LBS/DY	******	REPORT DAILY AV	REPORT DAILY MX	MG/L		TWICE/ WEEK	COMP
OXYGEN DEMAND, CHEM. (HIGH LEVEL) (COD) 00340 J 0 0 INTMD TRT, PRCS CMPLT	SAMPLE MEASUREMENT	1240	1734	(26)	******	45	62	(19)	0	TWICE/ WEEK	CC
	PERMIT REQUIREMENT	REPORT DAILY AV	REPORT DAILY MX	LBS/DY	******	REPORT DAILY AV	REPORT DAILY MX	MG/L		TWICE/ WEEK	COMP
PH 00400 J 0 0 INTMD TRT, PRCS CMPLT	SAMPLE MEASUREMENT	******	******	****	3.8	******	7.4	(19)	1	TWICE/ WEEK	GRAE
	PERMIT REQUIREMENT	******	******	****	6.0 MINIMUM	******	9.0 MAXIMUM	MG/L		TWICE/ WEEK	GRAE
SOLIDS, TOTAL SUSPENDED (TSS) 00530 J 0 0 INTMD TRT, PRCS CMPLT	SAMPLE MEASUREMENT	321	396	(26)	******	12	14	(19)	0	TWICE/ WEEK	COMPC
	PERMIT REQUIREMENT	1729 DAILY AV	3008 DAILY MX	LBS/DY	******	REPORT DAILY AV	REPORT DAILY MX	MG/L		TWICE/ WEEK	COMPC
COPPER, TOTAL (AS CU) 01042 J 0 0 INTMD TRT, PRCS CMPLT	SAMPLE MEASUREMENT	0.84	1.25		******	0.03	0.04	(19)	0	TWICE/ WEEK	COMPC
	PERMIT REQUIREMENT	REPORT DAILY AV	REPORT DAILY MX		******	REPORT DAILY AV	REPORT DAILY MX	MG/L		TWICE/ WEEK	COMPC
LEAD, TOTAL (AS PB) 01051 J 0 0 INTMD TRT, PRCS CMPLT	SAMPLE MEASUREMENT	0.0	0.0	(26)	******	0.0	0.0	(19)	0	TWICE/ WEEK	CC
	PERMIT REQUIREMENT	6.61 DAILY AV	16.28 DAILY MX	LBS/DY	******	REPORT DAILY AV	REPORT DAILY MX	MG/L		TWICE/ WEEK	COMPC
NICKEL, TOTAL (AS NI) 01067 J 0 0 INTMD TRT, PRCS CMPLT	SAMPLE MEASUREMENT	1.32	3.39		******	0.05	0.14	(19)	0	TWICE/ WEEK	COMPO
	PERMIT REQUIREMENT	12.95 DAILY AV	33.59 DAILY MX		******	REPORT DAILY AV	REPORT DAILY MX	MG/L		TWICE/ WEEK	COMPO

NAME / TITLE PRINCIPAL EXECUTIVE OFFICER
R.P. Smith
Vice-President/General Mgr.
TYPED OR PRINTED

I certify under penalty of law that this document and all attachments were prepared under my direction or supervision in accordance with a [illegible] system designed to assure that qualified personnel properly gather and evaluate the information submitted. Based on my inquiry of the person or persons who manage the system, or those persons directly responsible for gathering the information, the information submitted is, to the best of my knowledge and belief, true, accurate, and complete. I am aware that there are significant penalties for submitting false information, including the possibility of fine and imprisonment for knowing violations.

SIGNATURE OF PRINCIPAL EXECUTIVE OFFICER OR AUTHORIZED AGENT

TELEPHONE: 361| 987-7000 (area code NUMBER)

DATE: 02 | 03 | 11 (YEAR | MO | DAY)

COMMENT AND EXPLANATION OF ANY VIOLATIONS (Reference all attachments here)

PH non-compliance on 21 FEB 02, caused by inoperative process instruments and failure of process grab sampling to identify low pH.
TPDES 02436

Forms by ChemSW(707)864-0845;ph11090dmr;v5.20;1/1

This is a 4-part form.

CWA-Appendix G
EPA/FOIA2018-00232
VP0614

FORMOSA PLASTICS CORPORATION, TEXAS

ISO-9002 CERTIFIED
ISO-14001 CERTIFIED

P. O. BOX 700
201 FORMOSA DRIVE
POINT COMFORT, TX 77978

PHONE: 361-987-7000
FAX: 361-987-2363

FILE

February 20, 2002

Certified Mail
7000-0600-0025-0380-7677

Ms. Debra Berry
U.S. Environmental Protection Agency
Compliance Assurance & Enforcement Division
Water Enforcement Branch (6 EN-WC)
1445 Ross Avenue
Dallas, TX 75202-2733

RE: TPDES Permit No. 02436
EPA ID No. TX0085570
Addendum to January 2002
Discharge Monitoring Reports

Dear Ms. Berry:

Enclosed are the Discharge Monitoring Reports for the month of January 2002. For the Month of January 2002, there was one discharge exceedance reported on the DMR for pH at internal Outfall 201.

In a letter dated January 7, 2002, Formosa reported that the limit for pH was exceeded at Outfall 201. The pH value that was reported for the January 2, 2002 incident was 3.46 s.u. The permit limit for pH at Outfall 201 is between 6.0 and 9.0 s.u. Initial notifications were made to Ms. Debra Berry, EPA, on January 2, 2002.

As required by the current discharge permit, the waste water treatment facility sampled Outfall 201 on January 2, 2002 by taking a grab sample of the effluent and analyzed it for pH. The results indicated that the pH was 3.46 s.u. Per standard operating procedures, the waste water facility took appropriate actions to correct the situation. The initial sample was taken at 08:00 hours and the pH was brought back into limits by 09:30 hours.

While addressing the pH issue at internal Outfall 201, FPC personnel monitored the pH at Outfall 001. During this time period, Outfall 001's pH stayed within the permit required

6.0 to 9.0 s.u. Based on this information, there was no offsite impact as a result of this incident.

Should you require additional information or assistance, please contact Monique Wells, at (361) 987-7463. b6 7(c)

Sincerely,

R. P. Smith
Vice President/General Manager
Formosa Plastics Corporation, Texas

PERMITTEE NAME/ADDRESS: (Include Facility Name/Location if different)

NAME: FORMOSA PLASTICS CORP USA

ADDRESS: P.O. BOX 400

POINT COMFORT TX 77978

FACILITY: FORMOSA PLASTIC CORP USA

LOCATION: POINT COMFORT TX 77978

ATTN: R. P. Smith, Vice-President/General Mgr.

NATIONAL POLLUTANT DISCHARGE ELIMINATION SYSTEM (NPDES)

DISCHARGE MONITORING REPORT (DMR)

TX0085570 (2-16) PERMIT NUMBER

201 A (17-19) DISCHARGE NUMBER

MAJOR

F-FINAL

TREATED AND COMBINED UTILITY

MONITORING PERIOD

FROM YEAR 02 (20-21) | MO 01 (22-23) | DAY 01 (24-25) TO YEAR 02 (26-27) | MO 01 (28-29) | DAY 31 (30-31)

*** NO DISCHARGE ☐ ***

NOTE: Read instructions before completing this form.

PARAMETER (32-37)		(3 Card Only) (46-53) QUANTITY OR LOADING (54-61) AVERAGE	MAXIMUM	UNITS	(4 Card Only) (38-45) QUALITY OR CONCENTRATION (46-53) MINIMUM	AVERAGE	MAXIMUM	UNITS	NO. EX (62-63)	FREQUENCY OF ANALYSIS (64-68)	SAMPLE TYPE (69-70)
BOD, 5-DAY (20 DEG. C) 00310 J 0 0 INTMD TRT, PRCS CMPLT	SAMPLE MEASUREMENT	152	412	(26)	******	5	13	(19)	0	TWICE/ WEEK	COMPO
	PERMIT REQUIREMENT	304 DAILY AV	608 DAILY MX	LBS/DY	******	REPORT DAILY AV	REPORT DAILY MX	MG/L		TWICE/ WEEK	COMPO
OXYGEN DEMAND, CHEM. (HIGH LEVEL) (COD) 00340 J 0 0 INTMD TRT, PRCS CMPLT	SAMPLE MEASUREMENT	1563	3059	(26)	******	53	86	(19)	0	TWICE/ WEEK	CO
	PERMIT REQUIREMENT	REPORT DAILY AV	REPORT DAILY MX	LBS/DY	******	REPORT DAILY AV	REPORT DAILY MX	MG/L		TWICE/ WEEK	COMPO
PH 00400 J 0 0 INTMD TRT, PRCS CMPLT	SAMPLE MEASUREMENT	******	******	****	3.5	******	7.6	(19)	1	TWICE/ WEEK	GRAB
	PERMIT REQUIREMENT	******	******	****	6.0 MINIMUM	******	9.0 MAXIMUM	MG/L		TWICE/ WEEK	GRAB
SOLIDS, TOTAL SUSPENDED (TSS) 00530 J 0 0 INTMD TRT, PRCS CMPLT	SAMPLE MEASUREMENT	361	524	(26)	******	12	17	(19)	0	TWICE/ WEEK	COMPO
	PERMIT REQUIREMENT	1729 DAILY AV	3006 DAILY MX	LBS/DY	******	REPORT DAILY AV	REPORT DAILY MX	MG/L		TWICE/ WEEK	COMPO
COPPER, TOTAL (AS CU) 01042 J 0 0 INTMD TRT, PRCS CMPLT	SAMPLE MEASUREMENT	1.21	2.06	(26)	******	0.04	0.06	(19)	0	TWICE/ WEEK	COMPO
	PERMIT REQUIREMENT	REPORT DAILY AV	REPORT DAILY MX	LBS/DY	******	REPORT DAILY AV	REPORT DAILY MX	MG/L		TWICE/ WEEK	COMPO
LEAD, TOTAL (AS PB) 01051 J 0 0 INTMD TRT, PRCS CMPLT	SAMPLE MEASUREMENT	0.0	0.0	(26)	******	0.0	0.0	(19)	0	TWICE/ WEEK	COMPO
	PERMIT REQUIREMENT	6.61 DAILY AV	16.28 DAILY MX	LBS/DY	******	REPORT DAILY AV	REPORT DAILY MX	MG/L		TWICE/ WEEK	COMPO
NICKEL, TOTAL (AS NI) 01067 J 0 0 INTMD TRT, PRCS CMPLT	SAMPLE MEASUREMENT	1.37	3.35		******	0.05	0.10	(19)	0	TWICE/ WEEK	COMPO
	PERMIT REQUIREMENT	12.95 DAILY AV	33.59 DAILY MX		******	REPORT DAILY AV	REPORT DAILY MX	MG/L		TWICE/ WEEK	COMPO

NAME / TITLE PRINCIPAL EXECUTIVE OFFICER

R.P. Smith

Vice-President/General Mgr.

TYPED OR PRINTED

I certify under penalty of law that this document and all attachments were prepared under my direction or supervision in accordance with a system designed to assure that qualified personnel properly gather and evaluate the information submitted. Based on my inquiry of the person or persons who manage the system, or those persons directly responsible for gathering the information, the information submitted is, to the best of my knowledge and belief, true, accurate, and complete. I am aware that there are significant penalties for submitting false information, including the possibility of fine and imprisonment for knowing violations.

SIGNATURE OF PRINCIPAL EXECUTIVE OFFICER OR AUTHORIZED AGENT

TELEPHONE: area code 361 NUMBER 987-7000

DATE: YEAR 02 | MO 02 | DAY 13

COMMENT AND EXPLANATION OF ANY VIOLATIONS

TPDES 02436

(Reference all attachments here)

Forms by Chem8W(707)864-0845;pm110990dmr;v9.20;1/1/

This is a 4-part form.

FPCW-29
rec'd 2/12/04

FORMOSA PLASTICS CORPORATION, TEXAS

ISO-9002 CERTIFIED
ISO-14001 CERTIFIED

P. O. BOX 700
201 FORMOSA DRIVE
POINT COMFORT, TEXAS 77978

PHONE: 361/987-7000
FAX: 361/987-2363

FILE

February 20, 2003

Certified Mail
7001-2510-0008-0641-0411

Ms. Debra Berry
U.S. Environmental Protection Agency
Compliance Assurance & Enforcement Division
Water Enforcement Branch (6 EN-WC)
1445 Ross Avenue
Dallas, TX 75202-2733

RE: TPDES Permit No. 02436
EPA ID No. TX0085570
Addendum to January 2003
Discharge Monitoring Reports

Dear Ms. Berry:

Enclosed are the Discharge Monitoring Reports for the month of January 2003. For the month of January 2003, there are two exceedances reported on the DMR for Zinc Daily Maximum Limit for Outfall 001and Chloroform Daily Maximum Limit for Outfall 101.

In a letter dated February 4, 2003, Formosa reported that the limit for Zinc Daily Maximum Limit was exceeded at internal Outfall 001. The Zinc Daily Maximum Limit value that was reported for the January 16, 2003 incident was 5.92 lbs./days. The permit Daily Maximum Limit for Zinc is 5.5 lbs./day. Initial notifications were made to Ms. Debra Berry, EPA, on January 20, 2003.

As required by the current discharge permit, the FPC Combined Wastewater Treatment facility sampled Outfall 001 on January 16, 2003 by taking a routine 24 Hr. Composite sample for monitoring purposes. After Technical Department completed composite sample analysis, it was found that the zinc sample results was 5.92 lbs./day compared to the Daily Maximum Limit of 5.5 lbs./day. Per standard operating procedures, appropriate actions were taken to correct the situation, as stated in the letter dated February 4, 2003.

In a letter dated February 10, 2003, Formosa reported that the limit for Chloroform Daily Maximum Limit was exceeded at internal Outfall 101. The Chloroform Daily Maximum Limit value that was reported for the January 28, 2003 incident was 1.28 lbs./days. The permit Daily Maximum Limit for Chloroform is 1.20 lbs./day. Initial notifications were made to Ms. Debra Berry, EPA, on January 31, 2003.

As required by the current discharge permit, the FPC Combined Wastewater Treatment facility sampled Outfall 101 on January 28, 2003 by taking a routine 24 Hr. Composite sample for monitoring purposes. After Technical Department completed composite sample analysis, it was found that the chloroform sample results was 1.28 lbs./day compared to the Daily Maximum Limit of 1.20 lbs./day. Per standard operating procedures, appropriate actions were taken to correct the situation, as stated in the letter dated February 10, 2003.

Should you require additional information or assistance, please contact Monique Wells, at (361) 987-7463. b&7(c)

Sincerely,

R. P. Smith
Vice President/General Manager
Formosa Plastics Corporation, Texas

Enclosure

PERMITTEE NAME/ADDRESS: (Include Facility Name/Location if different)
NAME: FORMOSA PLASTICS CORP USA
ADDRESS: P.O. BOX 400
POINT COMFORT TX 77978

FACILITY: FORMOSA PLASTIC CORP USA

LOCATION: POINT COMFORT TX 77978
ATTN: R. P. Smith, Vice-President/General Mgr.

NATIONAL POLLUTANT DISCHARGE ELIMINATION SYSTEM (NPDES)
DISCHARGE MONITORING REPORT (DMR)

TX0085570 — PERMIT NUMBER (2-16)
001 A — DISCHARGE NUMBER (17-19)

MONITORING PERIOD

	YEAR	MO	DAY		YEAR	MO	DAY
FROM	03	01	01	TO	03	01	31
	(20-21)	(22-23)	(24-25)		(26-27)	(28-29)	(30-31)

MAJOR

F-FINAL
REMEDIATED GROUNDWATER AND
COMBINED INTERNAL W/W STREAMS
*** NO DISCHARGE ☐ ***

NOTE: Read instructions before completing this form.

PARAMETER (32-37)		(3 Card Only) (46-53) QUANTITY OR LOADING (54-61) AVERAGE	MAXIMUM	UNITS	(4 Card Only) (38-45) QUALITY OR CONCENTRATION (46-53) MINIMUM	AVERAGE	MAXIMUM	UNITS	NO. EX (62-63)	FREQUENCY OF ANALYSIS (64-68)	SAMPLE TYPE (69-70)
CARBON, TOT ORGANIC (TOC) 00680 1 0 0 EFFLUENT GROSS VALUE	SAMPLE MEASUREMENT	900	1087	(26)	******	*******	******	****	0	TWICE/ WEEK	COMPOS
	PERMIT REQUIREMENT	5939 DAILY AV	8484 DAILY MX	LBS/DY	******	*******	******	****		TWICE/ WEEK	COMPOS
CHROMIUM, HEXAVALENT (AS CR) 01032 1 0 0 EFFLUENT GROSS VALUE	SAMPLE MEASUREMENT	0.0	0.0	(26)	******	0.00	0.00	(19)	0	THREE/ WEEK	COMPOS
	PERMIT REQUIREMENT	3.7 DAILY AV	7.3 DAILY MX	LBS/DY	******	REPORT DAILY AV	REPORT DAILY MX	MG/L		THREE/ WEEK	COMPOS
CHROMIUM, TOTAL (AS CR) 01034 1 0 0 EFFLUENT GROSS VALUE	SAMPLE MEASUREMENT	0.1	1.6	(26)	******	0.00	0.03	(19)	0	THREE/ WEEK	COMPOS
	PERMIT REQUIREMENT	3.7 DAILY AV	7.3 DAILY MX	LBS/DY	******	REPORT DAILY AV	REPORT DAILY MX	MG/L		THREE/ WEEK	COMPOS
COPPER, TOTAL (AS CU) 01042 1 0 0 EFFLUENT GROSS VALUE	SAMPLE MEASUREMENT	0.92	1.49	(26)	******	0.02	0.03	(19)	0	THREE/ WEEK	COMPOS
	PERMIT REQUIREMENT	1.75 DAILY AV	3.70 DAILY MX	LBS/DY	******	REPORT DAILY AV	REPORT DAILY MX	MG/L		THREE/ WEEK	COMPOS
LEAD, TOTAL (AS PB) 01051 1 0 0 EFFLUENT GROSS VALUE	SAMPLE MEASUREMENT	0.0	0.0	(26)	******	0.00	0.00	(19)	0	THREE/ WEEK	COMPOS
	PERMIT REQUIREMENT	6.5 DAILY AV	16.0 DAILY MX	LBS/DY	******	REPORT DAILY AV	REPORT DAILY MX	MG/L		THREE/ WEEK	COMPOS
ZINC, TOTAL (AS ZN) 01092 1 0 0 EFFLUENT GROSS VALUE	SAMPLE MEASUREMENT	1.3	5.9	(26)	******	0.02	0.11	(19)	1	TWICE/ WEEK	COMPOS
	PERMIT REQUIREMENT	2.8 DAILY AV	5.5 DAILY MX	LBS/DY	******	REPORT DAILY AV	REPORT DAILY MX	MG/L		2/WEEK	COMPOS
TOLUENE 34010 1 0 0 EFFLUENT GROSS VALUE	SAMPLE MEASUREMENT	0.00	0.00	(26)	******	0.00	0.00	(19)	0	TWICE/ WEEK	COMPOS
	PERMIT REQUIREMENT	0.74 DAILY AV	2.26 DAILY MX	LBS/DY	******	REPORT DAILY AV	REPORT DAILY MX	MG/L		TWICE/ WEEK	COMPOS

NAME / TITLE PRINCIPAL EXECUTIVE OFFICER
R.P. Smith
Vice-President/General Mgr.
TYPED OR PRINTED

I certify under penalty of law that this document and all attachments were prepared under my direction or supervision in accordance with a system designed to assure that qualified personnel properly gather and evaluate the information submitted. Based on my inquiry of the person or persons who manage the system, or those persons directly responsible for gathering the information, the information submitted is, to the best of my knowledge and belief, true, accurate, and complete. I am aware that there are significant penalties for submitting false information, including the possibility of fine and imprisonment for knowing violations.

SIGNATURE OF PRINCIPAL EXECUTIVE OFFICER OR AUTHORIZED AGENT

TELEPHONE: area code NUMBER 361| 987-7000
DATE: YEAR | MO | DAY 03 | 02 | 13

Forms by ChemSW(707)864-0843;prd11000dmr;v5.20;1/1/96

COMMENT AND EXPLANATION OF ANY VIOLATIONS (Reference all attachments here)

The daily maximum for Zinc was exceeded on 01/16/03. The limit was exceeded by ~ 7%.

TPDES 02436

This is a 4-part form.

CWA-Appendix G
EPA/FOIA2018-00238
VP0614

PERMIT NAME/ADDRESS: (Include Facility Name/Location if different)
NAME: FORMOSA PLASTICS CORP USA
ADDRESS: P.O. BOX 400
POINT COMFORT TX 77978

FACILITY: FORMOSA PLASTIC CORP USA

LOCATION: POINT COMFORT TX 77978
ATTN: R. P. Smith, Vice-President/General Mgr.

NATIONAL POLLUTANT DISCHARGE ELIMINATION SYSTEM (NPDES)
DISCHARGE MONITORING REPORT (DMR)

PERMIT NUMBER (2-16)	DISCHARGE NUMBER (17-19)
TX0085570	101 A

MONITORING PERIOD

FROM YEAR (20-21)	MO (22-23)	DAY (24-25)	TO YEAR (26-27)	MO (28-29)	DAY (30-31)
03	01	01	03	01	31

MAJOR

F-FINAL

TREATED PROCESS WASTEWATER

*** NO DISCHARGE ☐ ***

NOTE: Read instructions before completing this form.

PARAMETER (32-37)		(3 Card Only) (46-53) QUANTITY OR LOADING (54-61) AVERAGE	MAXIMUM	UNITS	(4 Card Only) (38-45) QUALITY OR CONCENTRATION (46-53) MINIMUM	(54-61) AVERAGE	MAXIMUM	UNITS	NO. EX (62-63)	FREQUENCY OF ANALYSIS (64-68)	SAMPLE TYPE (69-70)
BOD, (5-DAY) (20 DEG. C) 00310 J 0 0 INTMD TRT, PRCS CMPLT	SAMPLE MEASUREMENT	0	0	(26)	******	0	0	(19)	0	TWICE/ WEEK	COMPOS
	PERMIT REQUIREMENT	731 DAILY AV	1959 DAILY MX	LBS/DY	******	REPORT DAILY AV	REPORT DAILY MX	MG/L		TWICE/ WEEK	COMPOS
OXYGEN DEMAND, CHEM. (HIGH LEVEL) (COD) 00340 J 0 0 INTMD TRT, PRCS CMPLT	SAMPLE MEASUREMENT	1215	1681	(26)	******	46	54	(19)	0	TWICE/ WEEK	COMPOS
	PERMIT REQUIREMENT	6676 DAILY AV	10014 DAILY MX	LBS/DY	******	REPORT DAILY AV	REPORT DAILY MX	MG/L		TWICE/ WEEK	COMPOS
PH 00400 J 0 0 INTMD TRT, PRCS CMPLT	SAMPLE MEASUREMENT	******	******	----	6.5	******	8.0	(19)	0	CONTIN UOUS	RCORDF
	PERMIT REQUIREMENT	******	******	****	5.0 MINIMUM	******	11.0 MAXIMUM	MG/L		CONTIN UOUS	RCORDF
SOLIDS, TOTAL SUSPENDED (TSS) 00530 J 0 0 INTMD TRT, PRCS CMPLT	SAMPLE MEASUREMENT	137	203	(26)	******	5	9	(19)	0	TWICE/ WEEK	COMPOS
	PERMIT REQUIREMENT	1149 DAILY AV	3735 DAILY MX	LBS/DY	******	REPORT DAILY AV	REPORT DAILY MX	MG/L		TWICE/ WEEK	COMPOS
CARBON TETRACHLORIDE 32102 J 0 0 INTMD TRT, PRCS CMPLT	SAMPLE MEASUREMENT	0.00	0.00	(26)	******	******	******	----	0	TWICE/ WEEK	COMPOS
	PERMIT REQUIREMENT	0.47 DAILY AV	0.99 DAILY MX	LBS/DY	******	******	******	****		TWICE/ WEEK	COMPOS
CHLOROFORM 32106 J 0 0 INTMD TRT, PRCS CMPLT	SAMPLE MEASUREMENT	0.29	1.28	(26)	******	******	******	----	1	TWICE/ WEEK	COMPOS
	PERMIT REQUIREMENT	0.55 DAILY AV	1.20 DAILY MX	LBS/DY	******	******	******	****		TWICE/ WEEK	COMPOS
BENZENE 34030 J 0 0 INTMD TRT, PRCS CMPLT	SAMPLE MEASUREMENT	0.00	0.00	(26)	******	0.00	0.00	(19)	0	TWICE/ WEEK	COMPOS
	PERMIT REQUIREMENT	0.97 DAILY AVG	3.55 DAILY MX	LBS/DY	******	REPORT DAILY AV	REPORT DAILY MX	MG/L		TWICE/ WEEK	COMPOS

NAME / TITLE PRINCIPAL EXECUTIVE OFFICER
R.P. Smith
Vice-President/General Mgr.
TYPED OR PRINTED

I certify under penalty of law that this document and all attachments were prepared under my direction or supervision in accordance with a system designed to assure that qualified personnel properly gather and evaluate the information submitted. Based on my inquiry of the person or persons who manage the system, or those persons directly responsible for gathering the information, the information submitted is, to the best of my knowledge and belief, true, accurate, and complete. I am aware that there are significant penalties for submitting false information, including the possibility of fine and imprisonment for knowing violations.

SIGNATURE OF PRINCIPAL EXECUTIVE OFFICER OR AUTHORIZED AGENT

TELEPHONE: area code NUMBER 361| 987-7000

DATE: YEAR | MO | DAY 03 | 02 | 13

COMMENT AND EXPLANATION OF ANY VIOLATIONS (Reference all attachments here)
The daily maximum for Chloroform was exceeded on 01/28/03. The limit was exceeded by - 7%.
TPDES 02436

Forms by ChemSW(707)864-0845;p/n11090dmr;v5.20;1/1/

This is a 4-part form.

PERMITTEE NAME/ADDRESS: (Include Facility Name/Location if different)
NAME: FORMOSA PLASTICS CORP., TEXAS
ADDRESS: P.O. BOX 700
POINT COMFORT, TX 77978

FACILITY: FORMOSA PLASTIC CORP USA

LOCATION: POINT COMFORT TX 77978
ATTN: R. P. Smith, Vice-President/General Mgr.

NATIONAL POLLUTANT DISCHARGE ELIMINATION SYSTEM (NPDES)
DISCHARGE MONITORING REPORT (DMR)

TX 0085570	TX1 Q
PERMIT NUMBER (2-16)	DISCHARGE NUMBER (17-19)

MONITORING PERIOD

	YEAR	MO	DAY		YEAR	MO	DAY
FROM	03	01	01	TO	03	03	31
	(20-21)	(22-23)	(24-25)		(26-27)	(28-29)	(30-31)

MAJOR

F-FINAL
QUARTERLY REPORTING - 001

*** NO DISCHARGE [ ] ***

NOTE: Read instructions before completing this form.

PARAMETER (32-37)		(3 Card Only) (46-53) QUANTITY OR LOADING (54-61) AVERAGE	MAXIMUM	UNITS	(4 Card Only) (38-45) QUALITY OR CONCENTRATION (46-53) MINIMUM	AVERAGE	(54-61) MAXIMUM	UNITS	NO. EX (62-63)	FREQUENCY OF ANALYSIS (64-68)	SAMPLE TYPE (69-70)
WHOLE EFFLUENT TOXICITY 22414 1 0 1 EFFLUENT GROSS VALUE	SAMPLE MEASUREMENT	******	******	****	100	100	******	(23)		QTRLY	COMP24
	PERMIT REQUIREMENT	******	******	****	REPORT 7 DA MIN	REPORT MO AV MN	******	PER-CENT		QTRLY	COMP24
	SAMPLE MEASUREMENT										
	PERMIT REQUIREMENT										
	SAMPLE MEASUREMENT										
	PERMIT REQUIREMENT										
	SAMPLE MEASUREMENT										
	PERMIT REQUIREMENT										
	SAMPLE MEASUREMENT										
	PERMIT REQUIREMENT										
	SAMPLE MEASUREMENT										
	PERMIT REQUIREMENT										
	SAMPLE MEASUREMENT										
	PERMIT REQUIREMENT										

NAME / TITLE PRINCIPAL EXECUTIVE OFFICER			TELEPHONE	DATE
R.P. Smith Vice-President/General Mgr.	I certify under penalty of law that this document and all attachments were prepared under my direction or supervision in accordance with a system designed to assure that qualified personnel properly gather and evaluate the information submitted. Based on my inquiry of the person or persons who manage the system, or those persons directly responsible for gathering the information, the information submitted is, to the best of my knowledge and belief, true, accurate, and complete. I am aware that there are significant penalties for submitting false information, including the possibility of fine and imprisonment for knowing violations.	SIGNATURE OF PRINCIPAL EXECUTIVE OFFICER OR AUTHORIZED AGENT	361 987-7000 area code NUMBER	03 | 04 | 14 YEAR | MO | DAY
TYPED OR PRINTED				

Forms by ChemSW(707)864-0845;phl11000dmr;v5.20;1/1/96

COMMENT AND EXPLANATION OF ANY VIOLATIONS (Reference all attachments here)

TPDES PERMIT 02436

This is a 4-part form.

CWA-Appendix G
EPA/FOIA2018-00240
VP0614

PERMITTEE NAME/ADDRESS: (Include Facility Name/Location if different)
NAME: FORMOSA PLASTICS CORP., TEXAS
ADDRESS: P.O. BOX 700
POINT COMFORT, TX 77978

FACILITY: FORMOSA PLASTIC CORP USA

LOCATION: POINT COMFORT TX 77978
ATTN: R. P. Smith, Vice-President/General Mgr.

NATIONAL POLLUTANT DISCHARGE ELIMINATION SYSTEM (NPDES)
DISCHARGE MONITORING REPORT (DMR)

PERMIT NUMBER (2-16)	DISCHARGE NUMBER (17-19)
TX 0085570	TXA Q

MONITORING PERIOD

	YEAR	MO	DAY		YEAR	MO	DAY
FROM	03	01	01	TO	03	03	31
	(20-21)	(22-23)	(24-25)		(26-27)	(28-29)	(30-31)

MAJOR

F-FINAL
QUARTERLY 24-HR ACUTE TOXICITY

*** NO DISCHARGE ☐ ***

NOTE: Read instructions before completing this form.

PARAMETER (32-37)		(3 Card Only) (46-53) QUANTITY OR LOADING (54-61) AVERAGE	MAXIMUM	UNITS	(4 Card Only) (38-45) QUALITY OR CONCENTRATION (46-53) MINIMUM	AVERAGE	MAXIMUM	UNITS	NO. EX (62-63)	FREQUENCY OF ANALYSIS (64-68)	SAMPLE TYPE (69-70)
LC50/PF STAT 24HR AC U MYSID. BAHIA TIE3E 1 0 0 EFFLUENT GROSS VALUE	SAMPLE MEASUREMENT	******	******	----	******	0	******	(9A)		QTRLY	COMP24
	PERMIT REQUIREMENT	******	******	****	******	REPORT SINGSAMP	******	PASS=0 FAIL=1		QTRLY	COMP24
	SAMPLE MEASUREMENT										
	PERMIT REQUIREMENT										
	SAMPLE MEASUREMENT										
	PERMIT REQUIREMENT										
	SAMPLE MEASUREMENT										
	PERMIT REQUIREMENT										
	SAMPLE MEASUREMENT										
	PERMIT REQUIREMENT										
	SAMPLE MEASUREMENT										
	PERMIT REQUIREMENT										
	SAMPLE MEASUREMENT										
	PERMIT REQUIREMENT										

NAME / TITLE PRINCIPAL EXECUTIVE OFFICER
R.P. Smith
Vice-President/General Mgr.
TYPED OR PRINTED

I certify under penalty of law that this document and all attachments were prepared under my direction or supervision in accordance with a system designed to assure that qualified personnel properly gather and evaluate the information submitted. Based on my inquiry of the person or persons who manage the system, or those persons directly responsible for gathering the information, the information submitted is, to the best of my knowledge and belief, true, accurate, and complete. I am aware that there are significant penalties for submitting false information, including the possibility of fine and imprisonment for knowing violations.

SIGNATURE OF PRINCIPAL EXECUTIVE OFFICER OR AUTHORIZED AGENT

TELEPHONE: 361| 987-7000 (area code NUMBER)

DATE: 03 | 04 | 14 (YEAR | MO | DAY)

Forms by ChemSW (707) 664-0845 p/n11060dmr v5.20 1/09

COMMENT AND EXPLANATION OF ANY VIOLATIONS (Reference all attachments here)
(PASS=0 FAIL=1) REPORT PASS AS '0' OR REPORT FAIL AS '1' IN CONCENTRATION AVG. ABOVE.
TPDES PERMIT 02436

This is a 4-part form.

CWA-Appendix G EPA/FOIA2018-00241 VP0614

FORMOSA PLASTICS CORPORATION, TEXAS

ISO-9002 CERTIFIED
ISO-14001 CERTIFIED

P. O. BOX 700
201 FORMOSA DRIVE
POINT COMFORT, TX 77978

PHONE: 361-987-7000
FAX: 361-987-2363

FILE

June 20, 2003

Certified Mail
7002-2410-0002-1129-9969

Ms. Cindy Stanislawski
Texas Commission on Environmental Quality
Enforcement Division
Water Quality Compliance Monitoring Team (MC 224)
P.O. Box 13087
Austin, TX 78711-3087

RE: TPDES Permit No. 02436
EPA ID No. TX0085570
Addendum to May 2003
Discharge Monitoring Reports

Dear Ms. Stanislawski:

Enclosed are the Discharge Monitoring Reports for the month of May 2003. There were no discharge exceedances reported on the DMR during this reporting period. Please note that although the temperature maximum for Outfall 001 is listed as 95°F, the actual maximum temperature was 94.86°F for the month of May, so there was no non-conformance.

Pursuant to the 05/23/03 letter from Mr. Samuel Coleman of EPA Region 6, the TCEQ now has lead responsibility for all compliance and enforcement issues for the FPC-TX Wastewater Permit. Additionally, the letter requires all reports and notifications go directly to the TCEQ. Therefore, this DMR and all future reports and notifications will be sent to your attention.

On May 28, 2003, the TCEQ Region 14 Office conducted the Annual Wastewater Audit, sampling permitted Outfalls 001 and 101. Pursuant to FPC-TX practice, split samples were taken and analyzed. A supplemental table of all split samples, including results and applicable permit limits, is included. Please note, there were no permit exceedances on any of the split samples.

Should you require additional information or assistance, please contact Kelly Long, at (361) 987-7463. b7(c)

Sincerely,

R. P. Smith
Vice President/General Manager
Formosa Plastics Corporation, Texas

Attachments

FORMOSA PLASTICS CORPORATION, TEXAS

ISO-9002 CERTIFIED
ISO-14001 CERTIFIED

P. O. BOX 700
201 FORMOSA DRIVE
POINT COMFORT, TX 77978

PHONE: 361-987-7000
FAX: 361-987-2363

FILE

July 30, 2003

Certified Mail
7002-2410-0002-1130-0023

Ms. Cindy Stanislawski
Texas Commission on Environmental Quality
Enforcement Division
Water Quality Compliance Monitoring Team (MC 224)
P.O. Box 13087
Austin, TX 78711-3087

RE: TPDES Permit No. 02436
EPA ID No. TX0085570
Addendum to June 2003
Discharge Monitoring Reports

Dear Ms. Stanislawski:

Enclosed are the Discharge Monitoring Reports for the month of June 2003, the Quarterly Reports for April 2003 through June 2003, and the Semi-Annual Reports for January 2003 through June 2003. There was one pH excursion at permitted storm water Outfall 006 on June 27, 2003. An oral report was called in to Ms. Suzanne Parr, TCEQ Region 14, on the same day and a follow-up letter to the event was sent to the attention of Mr. Carlton Stanley, Director, TCEQ Region 14, on July 3, 2003. No other excursions occurred during this reporting period.

Please note these DMR reports have been delayed in final preparation, review and submittal due to the advent of Hurricane Claudette in the Point Comfort area on Tuesday July 15, 2003, the subsequent power outage that occurred at the plant site, and the demand on plant personnel to bring all process units back on line.

Should you require additional information or assistance, please contact Kelly Long, at (361) 987-7463. b(7)(c)

Sincerely,

R. P. Smith
Vice President/General Manager
Formosa Plastics Corporation, Texas

Attachments

PERMITTEE NAME/ADDRESS: (Include Facility Name/Location if different)
NAME: FORMOSA PLASTICS CORP USA
ADDRESS: P.O. BOX 400
POINT COMFORT TX 77978

FACILITY: FORMOSA PLASTIC CORP USA

LOCATION: POINT COMFORT TX 77978
ATTN: R. P. Smith, Vice-President/General Mgr.

NATIONAL POLLUTANT DISCHARGE ELIMINATION SYSTEM (NPDES)
DISCHARGE MONITORING REPORT (DMR)

TX0085570	TX1 S
PERMIT NUMBER (2-16)	DISCHARGE NUMBER (17-19)

MONITORING PERIOD

	YEAR	MO	DAY		YEAR	MO	DAY
FROM	03	01	01	TO	03	06	30
	(20-21)	(22-23)	(24-25)		(26-27)	(28-29)	(30-31)

MAJOR

F-FINAL
1/6 MONTHS CHRONIC TOXICITY

*** NO DISCHARGE ☐ ***

NOTE: Read instructions before completing this form.

PARAMETER (32-37)		QUANTITY OR LOADING AVERAGE	QUANTITY OR LOADING MAXIMUM	QUANTITY OR LOADING UNITS	QUANTITY OR CONCENTRATION MINIMUM	QUANTITY OR CONCENTRATION AVERAGE	QUANTITY OR CONCENTRATION MAXIMUM	QUANTITY OR CONCENTRATION UNITS	NO. EX (42-43)	FREQUENCY OF ANALYSIS (54-58)	SAMPLE TYPE (69-70)
LF P/F LETH STATRE 7 DAY CHR MYSID. BAHIA TLP3E 1 0 0 EFFLUENT GROSS VALUE	SAMPLE MEASUREMENT	*******	******	****	0	0	*******	(9A)	0	ONCE/ 6MONTH	COMPOS
	PERMIT REQUIREMENT	*******	******	****	REPORT 7 DA MIN	REPORT MO AV MN	*******	PASS=0 FAIL=1		ONCE/ 6MONTH	COMPOS
LF P/F LETH STATRE 7 DAY CHR MENIDIA TLP6B 1 0 0 EFFLUENT GROSS VALUE	SAMPLE MEASUREMENT	*******	******	****	0	0	*******	(9A)	0	ONCE/ 6MONTH	COMPOS
	PERMIT REQUIREMENT	*******	******	****	REPORT 7 DA MIN	REPORT MO AV MN	*******	PASS=0 FAIL=1		ONCE/ 6MONTH	COMPOS
NOEL LETHAL STATRE 7 DAY CHR MYSID. BAHIA TOP3E 1 0 0 EFFLUENT GROSS VALUE	SAMPLE MEASUREMENT	*******	******	****	13	13	*******	(23)	0	ONCE/ 6MONTH	COMPOS
	PERMIT REQUIREMENT	*******	******	****	REPORT 7 DA MIN	REPORT MO AV MN	*******	PER-CENT		ONCE/ 6MONTH	COMPOS
NOEL LETHAL STATRE 7 DAY CHR MENIDIA TOP6B 1 0 0 EFFLUENT GROSS VALUE	SAMPLE MEASUREMENT	*******	******	****	13	13	*******	(23)	0	ONCE/ 6MONTH	COMPOS
	PERMIT REQUIREMENT	*******	******	****	REPORT 7 DA MIN	REPORT MO AV MN	*******	PER-CENT		ONCE/ 6MONTH	COMPOS
NOEL SUB-LETH STATRE 7 DAY CHR MYSID. BAHIA TPP3E 1 0 0 EFFLUENT GROSS VALUE	SAMPLE MEASUREMENT	*******	******	****	13	13	*******	(23)	0	ONCE/ 6MONTH	COMPOS
	PERMIT REQUIREMENT	*******	******	****	REPORT 7 DA MIN	REPORT MO AV MN	*******	PER-CENT		ONCE/ 6MONTH	COMPOS
NOEL SUB-LETH STATRE 7 DAY CHR MENIDIA TPP6B 1 0 0 EFFLUENT GROSS VALUE	SAMPLE MEASUREMENT	*******	******	****	13	13	*******	(23)	0	ONCE/ 6MONTH	COMPOS
	PERMIT REQUIREMENT	*******	******	****	REPORT 7 DA MIN	REPORT MO AV MN	*******	PER-CENT		ONCE/ 6MONTH	COMPOS
WHOLE EFFLUENT TOXICITY 22414 1 0 0 EFFLUENT GROSS VALUE	SAMPLE MEASUREMENT	*******	******	****	98	98	*******	(23)	0	ONCE/ 6MONTH	COMPOS
	PERMIT REQUIREMENT	*******	******	****	10 7 DA MIN	10 MO AV MN	*******	PER-CENT		ONCE/ 6MONTH	COMPOS

NAME / TITLE PRINCIPAL EXECUTIVE OFFICER			TELEPHONE	DATE
R.P. Smith Vice-President/General Mgr.	I certify under penalty of law that this document and all attachments were prepared under my direction or supervision in accordance with a system designed to assure that qualified personnel properly gather and evaluate the information submitted. Based on my inquiry of the person or persons who manage the system, or those persons directly responsible for gathering the information, the information submitted is, to the best of my knowledge and belief, true, accurate, and complete. I am aware that there are significant penalties for submitting false information, including the possibility of fine and imprisonment for knowing violations.	SIGNATURE OF PRINCIPAL EXECUTIVE OFFICER OR AUTHORIZED AGENT	361| 987-7000	03 | 07 | 24
TYPED OR PRINTED			area code NUMBER	YEAR | MO | DAY

COMMENT AND EXPLANATION OF ANY VIOLATIONS (Reference all attachments here)
(PASS=0 FAIL=1) REPORT PASS AS '0' REPORT FAIL AS '1' IN CONCENTRATION AVG. ABOVE.

Form by ChemSW(707)864-0845;pm110900dmr;v5.20;1/1/96

TPDES 02436

PERMITTEE NAME/ADDRESS: (Include Facility Name/Location if different)

NAME: FORMOSA PLASTICS CORP USA

ADDRESS: P.O. BOX 400

POINT COMFORT TX 77978

FACILITY: FORMOSA PLASTIC CORP USA

LOCATION: POINT COMFORT TX 77978

ATTN: R. P. Smith, Vice-President/General Mgr.

NATIONAL POLLUTANT DISCHARGE ELIMINATION SYSTEM (NPDES)

DISCHARGE MONITORING REPORT (DMR)

TX0085570	TXA S
PERMIT NUMBER (2-18)	DISCHARGE NUMBER (17-19)

MONITORING PERIOD

	YEAR	MO	DAY		YEAR	MO	DAY
FROM	03	01	01	TO	03	06	30
	(20-21)	(22-23)	(24-25)		(26-27)	(28-29)	(30-31)

MAJOR

F-FINAL

1/6 MONTHS 24HR ACUTE TOXICITY

*** NO DISCHARGE [ ] ***

NOTE: Read instructions before completing this form.

PARAMETER (32-37)		QUANTITY OR LOADING AVERAGE	QUANTITY OR LOADING MAXIMUM	UNITS	QUANTITY OR CONCENTRATION MINIMUM	QUANTITY OR CONCENTRATION AVERAGE	QUANTITY OR CONCENTRATION MAXIMUM	UNITS	NO. EX	FREQUENCY OF ANALYSIS	SAMPLE TYPE
LC50/PF STAT 24 HR AC U MENIDIA TIE6B 1 0 0 EFFLUENT GROSS VALUE	SAMPLE MEASUREMENT	*******	******	****	******	100	*******	(9A)	0	ONCE/ 6MONTH	COMP24
	PERMIT REQUIREMENT	*******	******	****	******	REPORT SINGSAMP	******	PASS=0 FAIL=1		ONCE/ 6MONTH	COMP24
	SAMPLE MEASUREMENT										
	PERMIT REQUIREMENT										
	SAMPLE MEASUREMENT										
	PERMIT REQUIREMENT										
	SAMPLE MEASUREMENT										
	PERMIT REQUIREMENT										
	SAMPLE MEASUREMENT										
	PERMIT REQUIREMENT										
	SAMPLE MEASUREMENT										
	PERMIT REQUIREMENT										
	SAMPLE MEASUREMENT										
	PERMIT REQUIREMENT										

NAME / TITLE PRINCIPAL EXECUTIVE OFFICER

R.P. Smith

Vice-President/General Mgr.

TYPED OR PRINTED

I certify under penalty of law that this document and all attachments were prepared under my direction or supervision in accordance with a system designed to assure that qualified personnel properly gather and evaluate the information submitted. Based on my inquiry of the person or persons who manage the system, or those persons directly responsible for gathering the information, the information submitted is, to the best of my knowledge and belief, true, accurate, and complete. I am aware that there are significant penalties for submitting false information, including the possibility of fine and imprisonment for knowing violations.

SIGNATURE OF PRINCIPAL EXECUTIVE OFFICER OR AUTHORIZED AGENT

TELEPHONE: area code NUMBER 361 | 987-7000

DATE: YEAR | MO | DAY 03 | 07 | 24

COMMENT AND EXPLANATION OF ANY VIOLATIONS (Reference all attachments here)

(PASS=0 FAIL=1) REPORT PASS AS '0' REPORT FAIL AS '1' IN CONCENTRATION AVG. ABOVE.

TPDES 02436

Forms by ChemSW(707)864-0845;phs110900mr;v3.20;1/1/96

PERMITTEE NAME/ADDRESS: (Include Facility Name/Location if different)
NAME: FORMOSA PLASTICS CORP., TEXAS
ADDRESS: P.O. BOX 700
POINT COMFORT, TX 77978

FACILITY: FORMOSA PLASTIC CORP USA

LOCATION: POINT COMFORT TX 77978
ATTN: R. P. Smith, Vice-President/General Mgr.

NATIONAL POLLUTANT DISCHARGE ELIMINATION SYSTEM (NPDES)
DISCHARGE MONITORING REPORT (DMR)

TX 0085570	TX1 Q
PERMIT NUMBER (2-16)	DISCHARGE NUMBER (17-19)

MONITORING PERIOD

	YEAR	MO	DAY		YEAR	MO	DAY
FROM	03	04	01	TO	03	06	30
	(20-21)	(22-23)	(24-25)		(26-27)	(28-29)	(30-31)

MAJOR

F-FINAL
QUARTERLY REPORTING - 001

*** NO DISCHARGE [ ] ***

NOTE: Read instructions before completing this form.

PARAMETER (32-37)		(3 Card Only) (46-53) QUANTITY OR LOADING (54-61) AVERAGE	MAXIMUM	UNITS	(4 Card Only) (38-45) QUALITY OR CONCENTRATION (46-53) MINIMUM	AVERAGE	MAXIMUM	UNITS	NO. EX (62-63)	FREQUENCY OF ANALYSIS (64-68)	SAMPLE TYPE (69-70)
WHOLE EFFLUENT TOXICITY 22414 1 0 1 EFFLUENT GROSS VALUE	SAMPLE MEASUREMENT	******	******	****	100	100	******	(23)	0	QTRLY	COMP24
	PERMIT REQUIREMENT	******		****	REPORT 7 DA MIN	REPORT MO AV MN	******	PER-CENT		QTRLY	COMP24
	SAMPLE MEASUREMENT										
	PERMIT REQUIREMENT										
	SAMPLE MEASUREMENT										
	PERMIT REQUIREMENT										
	SAMPLE MEASUREMENT										
	PERMIT REQUIREMENT										
	SAMPLE MEASUREMENT										
	PERMIT REQUIREMENT										
	SAMPLE MEASUREMENT										
	PERMIT REQUIREMENT										
	SAMPLE MEASUREMENT										
	PERMIT REQUIREMENT										

NAME / TITLE PRINCIPAL EXECUTIVE OFFICER			TELEPHONE	DATE
R.P. Smith Vice-President/General Mgr. TYPED OR PRINTED	I certify under penalty of law that this document and all attachments were prepared under my direction or supervision in accordance with a system designed to assure that qualified personnel properly gather and evaluate the information submitted. Based on my inquiry of the person or persons who manage the system, or those persons directly responsible for gathering the information, the information submitted is, to the best of my knowledge and belief, true, accurate, and complete. I am aware that there are significant penalties for submitting false information, including the possibility of fine and imprisonment for knowing violations.	SIGNATURE OF PRINCIPAL EXECUTIVE OFFICER OR AUTHORIZED AGENT	361 | 987-7000 area code NUMBER	03 | 07 | 25 YEAR | MO | DAY

COMMENT AND EXPLANATION OF ANY VIOLATIONS (Reference all attachments here)

Forms by ChemSW(707)864-0845;phl1000dmr;v5.20;1/1/96

TPDES PERMIT 02436

This is a 4-part form.

CWA-Appendix G
EPA/FOIA2018-00248
VP0614

PERMITTEE NAME/ADDRESS: (Include Facility Name/Location if different)

NAME: FORMOSA PLASTICS CORP., TEXAS

ADDRESS: P.O. BOX 700

POINT COMFORT, TX 77978

FACILITY: FORMOSA PLASTIC CORP USA

LOCATION: POINT COMFORT TX 77978

ATTN: R. P. Smith, Vice-President/General Mgr.

NATIONAL POLLUTANT DISCHARGE ELIMINATION SYSTEM (NPDES)

DISCHARGE MONITORING REPORT (DMR)

TX 0085570 (2-16) PERMIT NUMBER

TXA Q (17-19) DISCHARGE NUMBER

MONITORING PERIOD

FROM YEAR 03 (20-21) MO 04 (22-23) DAY 01 (24-25) TO YEAR 03 (26-27) MO 06 (28-29) DAY 30 (30-31)

MAJOR

F-FINAL

QUARTERLY 24-HR ACUTE TOXICITY

*** NO DISCHARGE ☐ ***

NOTE: Read instructions before completing this form.

PARAMETER (32-37)		(3 Card Only) (46-53) QUANTITY OR LOADING (54-61) AVERAGE	MAXIMUM	UNITS	(4 Card Only) (38-45) QUALITY OR CONCENTRATION (46-53) MINIMUM	AVERAGE	MAXIMUM	UNITS	NO. EX (42-43)	FREQUENCY OF ANALYSIS (64-68)	SAMPLE TYPE (69-70)
LC50/PF STAT 24HR AC U MYSID. BAHIA TIE3E 1 0 0 EFFLUENT GROSS VALUE	SAMPLE MEASUREMENT	******	******	****	******	0	******	(9A)	0	QTRLY	COMP24
	PERMIT REQUIREMENT	******	******	****	******	REPORT SINGSAMP	******	PASS=0 FAIL=1		QTRLY	COMP24
	SAMPLE MEASUREMENT										
	PERMIT REQUIREMENT										
	SAMPLE MEASUREMENT										
	PERMIT REQUIREMENT										
	SAMPLE MEASUREMENT										
	PERMIT REQUIREMENT										
	SAMPLE MEASUREMENT										
	PERMIT REQUIREMENT										
	SAMPLE MEASUREMENT										
	PERMIT REQUIREMENT										

NAME / TITLE PRINCIPAL EXECUTIVE OFFICER

R.P. Smith

Vice-President/General Mgr.

TYPED OR PRINTED

I certify under penalty of law that this document and all attachments were prepared under my direction or supervision in accordance with a system designed to assure that qualified personnel properly gather and evaluate the information submitted. Based on my inquiry of the person or persons who manage the system, or those persons directly responsible for gathering the information, the information submitted is, to the best of my knowledge and belief, true, accurate, and complete. I am aware that there are significant penalties for submitting false information, including the possibility of fine and imprisonment for knowing violations.

SIGNATURE OF PRINCIPAL EXECUTIVE OFFICER OR AUTHORIZED AGENT

TELEPHONE: area code 361 NUMBER 987-7000

DATE: YEAR 03 MO 07 DAY 25

Forms by ChemSW(707)884-0843,pm110/90dmr,v5.20,1/1/98

COMMENT AND EXPLANATION OF ANY VIOLATIONS (Reference all attachments here)

(PASS=0 FAIL=1) REPORT PASS AS '0' OR REPORT FAIL AS '1' IN CONCENTRATION AVG. ABOVE.

TPDES PERMIT 02436

This is a 4-part form.

CWA-Appendix G

EPA/FOIA2018-00249

VP0614

PERMITTEE NAME/ADDRESS: (Include Facility Name/Location if different)

NAME: FORMOSA PLASTICS CORP USA
ADDRESS: P.O. BOX 400
POINT COMFORT TX 77978

FACILITY: FORMOSA PLASTIC CORP USA

LOCATION: POINT COMFORT TX 77978
ATTN: R. P. Smith, Vice-President/General Mgr.

NATIONAL POLLUTANT DISCHARGE ELIMINATION SYSTEM (NPDES)
DISCHARGE MONITORING REPORT (DMR)

TX0085570	006 A
PERMIT NUMBER (2-16)	DISCHARGE NUMBER (17-19)

MONITORING PERIOD

	YEAR	MO	DAY		YEAR	MO	DAY
FROM	03	06	01	TO	03	06	30
	(20-21)	(22-23)	(24-25)		(26-27)	(28-29)	(30-31)

MAJOR

F-FINAL
200 FT. N ST HWY 35 AT CREEK

*** NO DISCHARGE ☐ ***

NOTE: Read instructions before completing this form.

PARAMETER (32-37)		QUANTITY OR LOADING (3 Card Only) (46-53) AVERAGE	MAXIMUM (54-61)	UNITS	QUALITY OR CONCENTRATION (4 Card Only) (38-45) MINIMUM	AVERAGE (46-53)	MAXIMUM (54-61)	UNITS	NO. EX (62-63)	FREQUENCY OF ANALYSIS (64-68)	SAMPLE TYPE (69-70)
PH 00400 1 0 0 EFFLUENT GROSS VALUE	SAMPLE MEASUREMENT	*******	******	****	3.1	*******	8.7	(12)	1	DAILY	GRAB
	PERMIT REQUIREMENT	*******	******	****	6.0 MINIMUM	*******	9.0 MAXIMUM	SU		DAILY	GRAB
OIL & GREASE 00556 1 0 0 EFFLUENT GROSS VALUE	SAMPLE MEASUREMENT	*******	******	****	******	*******	4	(19)	0	DAILY	GRAB
	PERMIT REQUIREMENT	*******	******	****	******	*******	15 DAILY MX	MG/L		DAILY	GRAB
CARBON, TOT ORGANIC (TOC) 00680 1 0 0 EFFLUENT GROSS VALUE	SAMPLE MEASUREMENT	*******	******	****	******	*******	9	(19)	0	DAILY	GRAB
	PERMIT REQUIREMENT	*******	******	****	******	*******	55 DAILY MX	MG/ L		DAILY	GRAB
	SAMPLE MEASUREMENT										
	PERMIT REQUIREMENT										
	SAMPLE MEASUREMENT										
	PERMIT REQUIREMENT										
	SAMPLE MEASUREMENT										
	PERMIT REQUIREMENT										
	SAMPLE MEASUREMENT										
	PERMIT REQUIREMENT										

NAME / TITLE PRINCIPAL EXECUTIVE OFFICER
R.P. Smith
Vice-President/General Mgr.
TYPED OR PRINTED

I certify under penalty of law that this document and all attachments were prepared under my direction or supervision in accordance with a system designed to assure that qualified personnel properly gather and evaluate the information submitted. Based on my inquiry of the person or persons who manage the system, or those persons directly responsible for gathering the information, the information submitted is, to the best of my knowledge and belief, true, accurate, and complete. I am aware that there are significant penalties for submitting false information, including the possibility of fine and imprisonment for knowing violations.

SIGNATURE OF PRINCIPAL EXECUTIVE OFFICER OR AUTHORIZED AGENT

TELEPHONE	DATE
361 | 987-7000	03 | 07 | 24
area code NUMBER	YEAR | MO | DAY

Forms by ChemSW(707)664-0845;p/n11090dmr;v8.20;1/1/98

COMMENT AND EXPLANATION OF ANY VIOLATIONS (Reference all attachments here)
WHEN DISCHARGING, INITIAL SAMPLE COLLECTED WITHIN 15 MINUTES AFTER A DISCHARGE BEGINS.
TPDES 02436
Low pH water entered Outfall 006 ~ seven hours after it was already open. Subsequently, a permit exceedance occurred.

This is a 4-part form.

FORMOSA PLASTICS CORPORATION, TEXAS

ISO-9002 CERTIFIED
ISO-14001 CERTIFIED

P. O. BOX 700
201 FORMOSA DRIVE
POINT COMFORT, TX 77978

PHONE: 361-987-7000
FAX: 361-987-2363

FILE

August 20, 2003

Certified Mail
7002-2410-0002-1130-0054

Ms. Cindy Stanislawski
Texas Commission on Environmental Quality
Enforcement Division
Water Quality Compliance Monitoring Team (MC 224)
P.O. Box 13087
Austin, TX 78711-3087

RE: TPDES Permit No. 02436
EPA ID No. TX0085570
Addendum to July 2003
Discharge Monitoring Reports

Dear Ms. Stanislawski:

Enclosed is the Discharge Monitoring Reports (DMR) for the month of July 2003. Please note on July 29, 2003, FPC-TX measured 2.09 lbs/day of chloroform, which is 0.89 lb above the permitted daily maximum of 1.20 lbs/day. This was reported orally to Ms. Suzanne Parr, TCEQ Region 14, at 0920 on July 31, 2003, within 24 hours of receiving the test results from the 24-hour composite sample taken on July 29, 2003. Also please note on July 15, 2003, due to Hurricane Claudette, Storm Water Outfalls 002 through 010 were overflowing and 011 was open and flowing, but samples could not be taken due to unsafe conditions from the storm, or samples analyzed due to the resulting loss of plant electrical power. There was no indication from samples taken and analyzed before or after the hurricane to indicate that anything other than storm water overflowed the outfalls during this time.

Should you require additional information or assistance, please contact Kelly Long, at (361) 987-7463. 6&7(c)

Sincerely,

R. P. Smith
Vice President/General Manager
Formosa Plastics Corporation, Texas

Attachments

PERMITTEE NAME/ADDRESS: (Include Facility Name/Location if different)
NAME: FORMOSA PLASTICS CORP USA
ADDRESS: P.O. BOX 400
POINT COMFORT TX 77978

FACILITY: FORMOSA PLASTIC CORP USA

LOCATION: POINT COMFORT TX 77978
ATTN: R. P. Smith, Vice-President/General Mgr.

NATIONAL POLLUTANT DISCHARGE ELIMINATION SYSTEM (NPDES)
DISCHARGE MONITORING REPORT (DMR)

TX0085570	101 A
PERMIT NUMBER (2-16)	DISCHARGE NUMBER (17-19)

MONITORING PERIOD

	YEAR	MO	DAY		YEAR	MO	DAY
FROM	03	07	01	TO	03	07	31
	(20-21)	(22-23)	(24-25)		(26-27)	(28-29)	(30-31)

MAJOR
F-FINAL
TREATED PROCESS WASTEWATER
*** NO DISCHARGE [ ] ***

NOTE: Read instructions before completing this form.

PARAMETER (32-37)		(3 Card Only) (46-53) QUANTITY OR LOADING (54-61) AVERAGE	MAXIMUM	UNITS	(4 Card Only) (38-45) QUALITY OR CONCENTRATION (46-53) MINIMUM	AVERAGE	(54-61) MAXIMUM	UNITS	NO. EX (62-63)	FREQUENCY OF ANALYSIS (64-68)	SAMPLE TYPE (69-70)
BOD, (5-DAY) (20 DEG. C) 00310 J 0 0 INTMD TRT, PRCS CMPLT	SAMPLE MEASUREMENT	66	369	(26)	******	2	9	(19)	0	TWICE/ WEEK	COMPOS
	PERMIT REQUIREMENT	731 DAILY AV	1959 DAILY MX	LBS/DY	******	REPORT DAILY AV	REPORT DAILY MX	MG/L		TWICE/ WEEK	COMPOS
OXYGEN DEMAND, CHEM. (HIGH LEVEL) (COD) 00340 J 0 0 INTMD TRT, PRCS CMPLT	SAMPLE MEASUREMENT	1270	1549	(26)	******	36	42	(19)	0	TWICE/ WEEK	COMPOS
	PERMIT REQUIREMENT	6676 DAILY AV	10014 DAILY MX	LBS/DY	******	REPORT DAILY AV	REPORT DAILY MX	MG/L		TWICE/ WEEK	COMPOS
PH 00400 J 0 0 INTMD TRT, PRCS CMPLT	SAMPLE MEASUREMENT	******	******	****	6.5	******	8.3	(19)	0	CONTIN UOUS	RCORDR
	PERMIT REQUIREMENT	******	******	****	5.0 MINIMUM	******	11.0 MAXIMUM	MG/L		CONTIN UOUS	RCORDR
SOLIDS, TOTAL SUSPENDED (TSS) 00530 J 0 0 INTMD TRT, PRCS CMPLT	SAMPLE MEASUREMENT	266	532	(26)	******	8	14	(19)	0	TWICE/ WEEK	COMPOS
	PERMIT REQUIREMENT	1148 DAILY AV	3735 DAILY MX	LBS/DY	******	REPORT DAILY AV	REPORT DAILY MX	MG/L		TWICE/ WEEK	COMPOS
CARBON TETRACHLORIDE 32102 J 0 0 INTMD TRT, PRCS CMPLT	SAMPLE MEASUREMENT	0.00	0.00	(26)	******	******	******	****	0	TWICE/ WEEK	COMPOS
	PERMIT REQUIREMENT	0.47 DAILY AV	0.99 DAILY MX	LBS/DY	******	******	******	****		TWICE/ WEEK	COMPOS
CHLOROFORM 32106 J 0 0 INTMD TRT, PRCS CMPLT	SAMPLE MEASUREMENT	0.33	2.10	(26)	******	******	******	****	1	TWICE/ WEEK	COMPOS
	PERMIT REQUIREMENT	0.55 DAILY AV	1.20 DAILY MX	LBS/DY	******	******	******	****		TWICE/ WEEK	COMPOS
BENZENE 34030 J 0 0 INTMD TRT, PRCS CMPLT	SAMPLE MEASUREMENT	0.00	0.00	(26)	******	0.00	0.00	(19)	0	TWICE/ WEEK	COMPOS
	PERMIT REQUIREMENT	0.97 DAILY AVG	3.55 DAILY MX	LBS/DY	******	REPORT DAILY AV	REPORT DAILY MX	MG/L		TWICE/ WEEK	COMPOS

NAME / TITLE PRINCIPAL EXECUTIVE OFFICER			TELEPHONE	DATE
R.P. Smith Vice-President/General Mgr. TYPED OR PRINTED	I certify under penalty of law that this document and all attachments were prepared under my direction or supervision in accordance with a system designed to assure that qualified personnel properly gather and evaluate the information submitted. Based on my inquiry of the person or persons who manage the system, or those persons directly responsible for gathering the information, the information submitted is, to the best of my knowledge and belief, true, accurate, and complete. I am aware that there are significant penalties for submitting false information, including the possibility of fine and imprisonment for knowing violations.	SIGNATURE OF PRINCIPAL EXECUTIVE OFFICER OR AUTHORIZED AGENT	361 | 987-7000 area code NUMBER	03 | 08 | 14 YEAR | MO | DAY

COMMENT AND EXPLANATION OF ANY VIOLATIONS (Reference all attachments here)
On July 29, 2003, the measured chloroform was 2.09 Lbs/Day. This represents a 74% increase above the daily maximum.
TPDES 02436

Forms by ChemSW (707)864-0845;phi110803mr;v5.20;1/1/96

This is a 4-part form.

CWA-Appendix G
EPA/FOIA2018-00252
VP0614

SPILL NOTIFICATION (CERCLA § 103) AND EMERGENCY PLANNING AND COMMUNITY RIGHT-TO-KNOW ACT (EPCRA §§ 304, 311, 312, AND 313)

MULTIMEDIA COMPLIANCE INVESTIGATION

FORMOSA PLASTICS CORPORATION – TEXAS (FPC-TX)
Point Comfort, Texas

Facility Address:

Formosa Plastics Corporation - Texas
201 Formosa Drive
P.O. Box 700
Point Comfort, Texas 77978
361-987-7000

Investigation Dates:

February 2 through 12, 2004

Lead Investigators:

Armando Bustamante, Environmental Engineer
Martha Hamre, Environmental Engineer
NEIC

CONTENTS

MEDIA REPORT 3

REGULATORY SUMMARY 3
ON-SITE INSPECTION SUMMARY 3

Compliance Evaluation 4

Emergency Notification Reporting 4
Community Right-to-Know Requirements 14
Chemical Release Inventory Reporting 15

SUMMARY OF FINDINGS 29

AREAS OF NONCOMPLIANCE 29
AREAS OF CONCERN 30

TABLES

1 Reportable Releases 6
2 2000, 2001, 2002 Threshold Quantities 16
3 Summary of Form R Submittals for 2000, 2001, and 2002 18
4 Form R Fugitive and Stack Air Emissions Comparison of Section 5 to Section 8.8 22
5 Fugitive Emissions from Utilities CWTP for Reporting Year 2002 23
6 Comparison of Fugitive Emissions from Maintenance Contractor Paints/Solvents for Reporting Year 2000 23
7 Reported/Recorded Pounds of VCM Plant Vinyl Chloride Emitted 24
8 Emissions Estimate Comparison and Underreported Vinyl Chloride Emissions 25
9 Data Quality Errors Found in Formosa's Toxic Release Reporting 27

APPENDICES

A Formosa Spill/Release Reporting Procedure 05 - Notification to Agencies (39 pages)
B VCM Emissions Modeling Discussion (5 pages)
C TRI Report Background Calculations (12 pages)
D Submitted CERCLA Reports for Vinyl Chloride (63 pages)
E Formosa Maintenance Contractor Paint/Solvent Background Calculations Summary Sheet (1 page)
F CERCLA-Reported Emissions/Ambient-Detected Emissions Evaluation (1 page)
G May 7, 2004 Correspondence from Formosa Regarding Form R Section 8.8 Reporting (2 pages)

EPA/FOIA2018-00266

MEDIA REPORT

At the request of U.S. EPA Region 6, the National Enforcement Investigations Center (NEIC) conducted a process-based multimedia compliance investigation of the Formosa Plastics Corporation – Texas (Formosa) plant located in Point Comfort, Texas. This report, one of a series that addresses investigation findings, discusses issues and compliance with EPCRA and CERCLA.

REGULATORY SUMMARY

CERCLA was enacted in 1980. Provisions in CERCLA require facilities to report releases of hazardous substances in excess of reportable quantities to the National Response Center (NRC). Formosa is subject to the Designation, Reportable Quantities, and Notification requirements of 40 CFR Part 302 (CERCLA § 103).

EPCRA was enacted as Title III of the Superfund Amendments and Reauthorization Act (SARA) of 1986. EPCRA (also known as SARA Title III) requires regulated facilities to provide information to EPA, state, and community groups concerning chemicals handled by the facility and chemical releases. Formosa is subject to the: Emergency Planning and Notification requirements of 40 CFR Part 355, Hazardous Chemical Reporting: Community Right-to-Know requirements of 40 CFR Part 370, and Toxic Chemical Release Reporting requirements of 40 CFR Part 372.

ON-SITE INSPECTION SUMMARY

NEIC conducted the on-site inspection February 2 through 12, 2004. NEIC presented credentials to [Tamara Christian,] Environmental Manager, Formosa, and [Mike Rivet,] Director, Environmental, Health, and Safety, Formosa. A general process overview of facility operations was presented, followed by a site tour and detailed discussion of the facility processes. Following the detailed process description, the EPCRA related records/documents were reviewed. An exit conference between regulatory and facility personnel was conducted to discuss preliminary inspection findings. NEIC investigators stressed that final determinations will be made in conjunction with regional and state personnel. b§7(c)

Emergency Notification Reporting [CERCLA § 103 and EPCRA § 304(a) and (b)]

Reporting procedures for environmental incidents and releases of hazardous materials at Formosa are documented in a procedure titled: Procedure 05 Notification to Agencies [Appendix A]. The procedure outlines steps for reporting releases from the facility.

According to the spill reporting procedure, spills and releases that are discovered in the facility are immediately reported to the operations department supervisor on duty. The supervisor shall immediately (within 15 minutes), upon knowledge of the release, notify the Shift Safety Coordinator. The Shift Safety Coordinator shall immediately notify all applicable regulatory agencies and appropriate facility personnel. The Formosa procedure states that the initial notification shall be made within a 30-minute period.

The operations department is responsible for determining if the release is a reportable quantity (RQ) release. If the quantity of the chemical released cannot be calculated within 30-minutes, the release is reported as an RQ release, with the quantity reported as unknown. The operations department will then calculate the quantity of the chemicals released and report to the Shift Safety Coordinator within 12 hours after the beginning of the release. The Shift Safety Coordinator will then update the initial notification quantity released. If the chemical being released exceeds an RQ, the Shift Safety Coordinator will notify the environmental staff on-call.

The Shift Safety Coordinator is responsible for completing a field report for the plant incident file. Information on the report includes:

- Date and estimated time of release
- Estimated volume of release and type of material
- Location and extent of release
- Affected media
- Cause of release
- Corrective actions being taken
- Name of person completing notification form

The appropriate media environmental staff will complete and submit any required follow-up reports. The Formosa reporting procedure details the required agency notifications.

NEIC reviewed release reports for the period January 2001 to December 2003. Formosa has reported releases to the National Response Center (NRC), the Texas Commission on Environmental Quality, which is the state emergency response commission (SERC), and the

Calhoun County Local Emergency Planning Committee (LEPC). Formosa has reported 117 releases exceeding a reportable quantity of hazardous or extremely hazardous chemicals for the time period January 2001 to December 2003. Table 1 contains a summary of the releases reported that exceeded a reportable quantity. Releases highlighted in black were either reported prior to the release, or within 15 minutes. Releases highlighted in blue were reported more than 15 minutes after the Shift Safety Coordinator was notified but in less than 1 hour. Releases highlighted in green were reported between 1 and 2 hours after the Shift Safety Coordinator was notified. Releases highlighted in red were reported 2 hours or more after the Shift Safety Coordinator was notified.

Provisions in CERCLA 103 require facilities to immediately notify the NRC of any hazardous substance releases to the environment in excess of the reportable quantities. (Federally permitted releases are excluded from this reporting requirement.) [Formosa failed to immediately notify the NRC of 72 reportable releases [**Area of Noncompliance** (AON) 1]. 7(B)

Provisions in EPCRA 304 require facilities to immediately notify the LEPC and SERC of any hazardous substance release to the environment in excess of the reportable quantity. [The LEPC and SERC were not immediately notified of 70 reportable releases [AON 2]. 7(B)

Provisions in EPCRA 304 require facilities to provide follow-up notification to the LEPC and SERC for any hazardous substance release to the environment in excess of the reportable quantity. [Formosa did not provide written follow-up notification for two reportable releases [AON 3]. 7(B)

[Formosa failed to report numerous instances where reportable quantities of VCM have been released.] Formosa performs ambient air monitoring for vinyl chloride in both the PVC and VCM processing units under the Clean Air Act Vinyl Chloride National Emission Standards for Hazardous Air Pollutants (NESHAP). In the VCM plant, samples are collected from approximately 60 stations and routed to mass spectrometer (MS) units for real-time analysis. NEIC collected available MS data from the VCM unit for 259 days between February 25 and November 20, 2003 (hereafter the evaluation period) along with operator logs on leak identification and repairs during this timeframe. NEIC analyzed the data to evaluate compliance with federal regulations and system effectiveness in reducing leaks. 7(B)

VCM mass emission rates can be estimated from Formosa's concentration data by applying basic emissions modeling principles which are presented in greater detail in the Clean Air Act report. Appendix B presents the model equations, and provides justification for specific factors and assumptions included in the model described in the Clean Air Act report.

Table 1

REPORTABLE RELEASES
Formosa Plastics Corporation
Point Comfort, Texas

Date	Time	Time Safety Notified	Compound	Amount (lbs)	Reportable Quantity (lbs)	Hazardous/ Extremely Hazardous	NRC	LEPC	SERC	Follow-up Notification
02/13/2001[1]	0945	1052	Vinyl chloride	22.74	1	H	1013	1044 (fax)	1025 (fax)	02/22/2001
02/21/2001[2]	0030	0040	Vinyl chloride	5.729	1	H	0115	0115 (fax)	0115 (fax)	02/26/2001
03/04/2001	1240	1245	Vinyl chloride	384.35	1	H	1311	1414 (fax)	1310 (no answer) 1414 (fax)	03/12/2001
04/27/2001[3]	2000	2108	Vinyl chloride	2.5	1	H	2230	2217 (fax)	2217 (fax)	05/11/2001
04/29/2001	1900	NA	Vinyl chloride	4.57	1	H	2045	2031 (fax)	2031 (fax)	05/11/2001
05/04/2001	0140	0150	Ethylene dichloride Vinyl chloride	174.66 1,515.59	100 1	H H	0215	0220 (fax)	0218 (fax)	05/14/2001
05/22/2001[4]	1730	1855	Nitrogen oxide	37.18	10	H	2030 (fax)	2022 (fax)	2022 (fax)	06/02/2001
05/23/2001[5]	1900	0230	Vinyl chloride	123.8	1	H	0302	0254 (fax)	0254 (fax)	09/10/2001
06/09/2001	1800	06/10/2001 1000	Vinyl chloride	62.24	1	H	1200	1200 (fax)	1200 (fax)	06/20/2001
06/15/2001[3]	1330	06/02/2001 1435	Nitrogen oxide	14.63	10	H	06/02/2001 1534	06/02/2001 1547 (fax)	06/02/2001 1451 (fax)	06/15/2001
06/19/2001[3]	1300	NA	Benzene 1,3-Butadiene Nitrogen oxide	43.50 44.86 878.327	10 10 10	H H H	1250	1635 (fax)	1635 (fax)	07/19/2001
06/22/2001	1700	1650	1,3-Butadiene Nitrogen oxide	28.706 959	10 10	H H	1715	1758 (fax)	1758 (fax)	07/06/2001
06/23/2001	1000	1402	Vinyl chloride	17.8	1	H	1550	1530 (fax)	1600 (fax)	07/03/2001
07/05/2001[3]	1453	07/04/2001 1036	1,3-Butadiene Nitrogen oxide	220.397 1,510	10 10	H H	07/04/2001 1111	07/04/2001 1110 (fax)	07/04/2001 1125 (fax)	07/19/2001
07/19/2001[4]	0930	07/25/2001 1630	Vinyl chloride	51.81	1	H	07/25/2001 2000	07/25/2001 1930 (fax)	07/25/2001 1950 (fax)	07/30/2001
08/01/2001	1000	1400	Vinyl chloride	67.93	1	H	1510	1528 (fax)	1519 (fax)	08/11/2001
09/23/2001	2021	2035	Vinyl chloride	696.27	1	H	2105	2100 (fax)	2100 (fax)	10/02/2001
10/05/2001	1145	2030	Nitrogen oxide	169.775	10	H	2100	2100 (fax)	2100 (fax)	10/15/2001
10/12/2001	0820	0830	Ethylene dichloride Vinyl chloride	29.74 18.0	100 1	H H	0910	0938 (fax)	0938 (fax)	10/19/2001

1 *Black highlighted releases were reported prior to the release or within 15 minutes after shift safety notified.*
2 *Blue highlighted releases were reported between 15 minutes and 1 hour after shift safety notified.*
3 *Green highlighted releases were reported between 1 hour and 2 hours after shift safety notified.*
4 *Event was planned maintenance. Notified local agencies prior to the event.*
5 *Notifications completed after receipt of analytical results on samples taken at time of incident.*

EPA/FOIA2018-00270

Date	Time	Time Safety Notified	Compound	Amount (lbs)	Reportable Quantity (lbs)	Hazardous/ Extremely Hazardous	NRC	LEPC	SERC	Follow-up Notification
10/18/2001	0940	0940	Vinyl chloride	4.73	1	H	1020	1017 (fax)	1017 (fax)	10/30/2001
11/08/2001	1600	1610	Vinyl chloride	6.80	1	H	1630	1635 (fax)	1635 (fax)	11/16/2001
12/03/2001[1]	1200	1300	Nitrogen oxide	702.83	10	H	1330	1330 (fax)	1330 (fax)	12/21/2001
12/08/2001	2215	12/09/2001 2020	Vinyl chloride	70.98	1	H	12/09/2001 2100	12/09/2001 2100 (fax)	12/09/2001 2100 (fax)	12/17/2001
12/17/2001[1]	1201	NA	Nitrogen oxide	240.39	10	H	1513	12/14/2001 1105 (fax)	12/14/2001 1105 (fax)	01/04/2002
01/14/2002[1]	0601	01/15/2002 0115	Nitrogen oxide	1,094.17	10	H	01/15/2002 0135	01/15/2002 0145	01/15/2002 0145	04/15/2002
02/04/2002	0933	0933	Ethylene dichloride Vinyl chloride	1,193.10 1,043.57	100 1	H H	0957	0937 (fax)	0937 (fax)	02/13/2002
02/19/2002[1]	0600	NA	Benzene 1,3-Butadiene Hexane Isoprene Nitrogen oxide Toluene	106.29 2,532.365 26.4 44.454 5,396 9.322	10 10 5,000 100 10 1,000	H H H H H H		02/13/2002 1622 (fax)	02/13/2002 1622 (fax)	03/21/2002
02/23/2002[1]	1900	NA	Ethylene dichloride	1,511.72	100	H	02/24/2002 1725	02/24/2002 1740 (fax)	02/24/2002 1740 (fax)	03/08/2002
03/02/2002	0625	1725	Nitrogen oxide	19.1	10	H	1725	1740 (fax)	1740 (fax)	03/22/2002
03/11/2002[4]	1900	03/12/2002 1836	Ethylene dichloride Vinyl chloride	6.24 2.0	100 1	H H	03/12/2002 1950	03/12/2002 2053 (fax)	03/12/2002 2053 (fax)	03/25/2002
03/16/2002	0219	0210	Nitrogen oxide	970.48	10	H	0312	0308 (fax)	0308 (fax)	03/29/2002
03/19/2002	0100	NA	Nitrogen oxide	91.02	10	H	1415	1411 (fax)	1411 (fax)	04/02/2002
03/19/2002[1]	1700	03/20/2002 0000	Benzene 1,3-Butadiene Hexane Isoprene Nitrogen oxide Toluene	106.288 2,532.365 26.4 44.454 5,396 9.322	10 10 5,000 100 10 1,000	H H H H H H	03/20/2002 0130	03/20/2002 0130 (fax)	03/20/2002 0130 (fax)	04/11/2002
03/27/2002	1254	2000	Nitrogen oxide	26.5	10	H	2020	2020 (fax)	2020 (fax)	04/10/2002
03/29/2002[1]	0010	03/27/2002 1600	Nitrogen oxide	147.12	10	H	0335	03/27/2002 1600 (fax)	03/27/2002 1600 (fax)	04/26/2002
04/08/2002	1700	1758	Nitrogen oxide	1,550.25	10	H	1828	1825 (fax)	1825 (fax)	04/22/2002
04/14/2002	0030	1300	Nitrogen oxide	19.62	10	H	1400	1400 (fax)	1400 (fax)	04/26/2002
04/15/2002	1800	NA	Nitrogen oxide	116.04	10	H	2032	2030 (fax)	2030 (fax)	04/29/2002
04/26/2002	1330	NA	Nitrogen oxide	15.43	10	H	1630	1655 (fax)	1655 (fax)	05/10/2002

1 *Event was planned maintenance. Notified local agencies prior to the event.*
2 *Notification to NRC not indicated in facility documentation.*
3 *Red highlighted releases were reported 2 hours or more after shift safety notified.*
4 *Notifications completed after receipt of analytical results on samples taken at time of incident.*

EPA/FOIA2018-00271

Date	Time	Time Safety Notified	Compound	Amount (lbs)	Reportable Quantity (lbs)	Hazardous/ Extremely Hazardous	NRC	LEPC	SERC	Follow-up Notification
04/30/2002[2]	2220	05/01/2002 1136	Ethylene dichloride Vinyl chloride	330.20 155.78	100 1	H H	05/01/2002 1650	05/01/2002 1627 (fax)	05/01/2002 1627 (fax)	05/14/2002
05/01/2002	1835	1835	Nitrogen oxide	4,547.99	10	H	1939	2005 (fax)	2005 (fax)	05/15/2002
05/06/2002	1030	1700	Nitrogen oxide	316.57	10	H	2100	2100 (fax)	2100 (fax)	05/24/2002
05/10/2002	1430	1430	1,3-Butadiene	14.35	10	H	1452	1507 (fax)	1507 (fax)	05/24/2002
05/12/2002	2130	05/13/2002 0900	Methylene chloride	4,828	1,000	H	05/13/2002 1055	05/13/2002 1115 (fax)	05/13/2002 1115 (fax)	05/24/2002
05/29/2002	1426	1400	Nitrogen oxide	106.26	10	H	1456	1456 (fax)	1456 (fax)	06/12/2002
06/03/2002	2342	06/04/2002	Nitrogen oxide	29.60	10	H	2315	2348 (fax)	2348 (fax)	06/17/2002
06/30/2002	0200	0200	Benzene 1,3-Butadiene Hexane Nitrogen oxide Styrene Toluene Xylene	483.56 3,919.32 48.64 4,510 163.83 559.60 366.70	10 10 5,000 10 1,000 1,000 100	H H H H H H H	0300	0300 (fax)	0300 (fax)	07/12/2002
07/02/2002[1]	1255	NA	Benzene 1,3-Butadiene Hexane Isoprene Nitrogen oxide Toluene	1,153.97 86.02 11.66 40.30 3,305.20 14.52	10 10 5,000 100 10 1,000	H H H H H H	1445	1240 (fax)	1240 (fax)	07/19/2002
07/02/2002	0951	0951	Benzene 1,3-Butadiene Hexane Nitrogen oxide Styrene Toluene Xylene	216.18 1,074.97 22.57 1,426 70.39 241.11 157.56	10 10 5,000 10 1,000 1,000 100	H H H H H H H	1032	1030 (fax)	1030 (fax)	07/16/2002
07/08/2002	0052	0050	Benzene 1,3-Butadiene Hexane Nitrogen oxide Styrene Toluene Xylene	80.32 1,077.44 10.89 1,588.55 0.05 13.56 0.15	10 10 5,000 10 1,000 1,000 100	H H H H H H H	0115	0120 (fax)	0120 (fax)	07/22/2002
07/26/2002	1200	07/30/2002 1545	Benzene	1,480.12	10	H	1610	1606 (fax)	1606 (fax)	08/13/2002
07/31/2002[1]	1054	07/30/2002 1545	Benzene 1,3-Butadiene	80.322 1,077.446	10 10	H H	07/30/2002 1444	07/30/2002 1645 (fax)	07/30/2002 1645 (fax)	08/20/2002

1 *Event was planned maintenance. Notified local agencies prior to the event.*

EPA/FOIA2018-00272

Date	Time	Time Safety Notified	Compound	Amount (lbs)	Reportable Quantity (lbs)	Hazardous/ Extremely Hazardous	NRC	LEPC	SERC	Follow-up Notification
			Hexane	10.894	5,000	H				
			Isoprene	37.638	100	H				
			Nitrogen oxide	1,588.556	10	H				
			Styrene	0.058	1,000	H				
			Toluene	13.565	1,000	H				
			Xylene	0.157	100	H				
08/23/2002	0300	NA	Nitrogen oxide	18.33	10	H	1130	1126 (fax)	1126 (fax)	09/06/2002
09/02/2002[1]	1030	NA	Nitrogen dioxide	7.5	10	H/EH	09/02/2002 1330	09/02/2002 1349 (fax)	09/02/2002 1349 (fax)	10/30/2002
			Nitrogen oxide	142.65	10	H				
09/03/2002[1]	0700	NA	Nitrogen dioxide	233	10	H/EH	08/23/2002 1700	08/23/2002 1610 (fax)	08/23/2002 1610 (fax)	11/05/2002
			Nitrogen oxide	4,419	10	H				
09/16/2002	2240	2350	Benzene	45.9	10	H	0214	0252 (fax)	0252 (fax)	09/30/2002
			Ethyl benzene	6.8	100	H				
			Hexane	13.2	5,000	H				
			Toluene	17.7	100	H				
			m-Xylene	2.1	1,000	H				
			o-Xylene	0.8	1,000	H				
			p-Xylene	0.9	100	H				
09/23/2002[1]	1500	08/30/2002 1700	Heavy ends	10.86	1		09/26/2002 1802	08/30/2002 1800 (fax)	08/30/2002 1800 (fax)	10/10/2002
10/08/2002	1403	1408	Benzene	2,342.726	10	H	1440	1442 (fax)	1442 (fax)	10/24/2002
			1,3-Butadiene	1,227.778	10	H				
			Hexane	334.9929	5,000	H				
			Isoprene	676.1634	100	H				
			Naphthalene	23.15673	100	H				
			Nitrogen dioxide	144.1159	10	H/EH				
			Nitrogen oxide	2,738.202	10	H				
			Styrene	4.810208	1,000	H				
			Toluene	503.9794	1,000	H				
			Xylene	10.38402	100	H				
10/11/2002	0744	0750	Benzene	3,357.091	10	H	0820	0820	0834 (fax)	10/25/2002
			1,3-Butadiene	1,073.096	10	H				
			Hexane	437.7216	5,000	H				
			Isoprene	858.5189	100	H				
			Naphthalene	18.2368	100	H				
			Nitrogen dioxide	224.483	10	H/EH				
			Nitrogen oxide	4,265.176	10	H				
			Styrene	5.4192	1,000	H				
			Toluene	757.018	1,000	H				
			Xylene	11.912	100	H				

[1] *Event was planned maintenance. Notified local agencies prior to the event.*

EPA/FOIA2018-00273

Date	Time	Time Safety Notified	Compound	Amount (lbs)	Reportable Quantity (lbs)	Hazardous/ Extremely Hazardous	NRC	LEPC	SERC	Follow-up Notification
10/20/2002	0045	0047	Hydrochloric acid	8.4	5,000	H/EH	0130	0130 (fax)	0130 (fax)	11/01/2002
			Ethylene dichloride	1.92	100	H				
			Vinyl chloride	18.85	1	H				
11/04/2002	1404	1630	Nitrogen dioxide	213.56	10	H/EH	1800	1800 (fax)	1800 (fax)	11/18/2002
			Nitrogen oxide	11.24	10	H				
11/06/2002	1110	1128	Nitrogen dioxide	133.47	10	H/EH	1150	1200 (fax)	1200 (fax)	11/20/2002
11/08/2002	1340	1430	Nitrogen dioxide	266.96	10	H/EH	1545	1540 (fax)	1540 (fax)	11/22/2002
			Nitrogen oxide	14.49	10	H				
11/10/2002	0008	0030	Nitrogen dioxide	142.38	10	H/EH	0330	0330 (fax)	0330 (fax)	11/22/2002
11/13/2002[1]	0800	11/12/2002	Nitrogen oxide	17.791	10	H	11/12/2002 0845	11/12/2002 1431 (fax)	11/12/2002 1431 (fax)	12/03/2002
11/20/2002	0821	0935	Nitrogen dioxide	84.44	10	H/EH	1013	0950 (fax)	0950 (fax)	12/04/2002
11/30/2002	2340	NA	Benzene	187	10	H	12/01/2002 0001	12/01/2002 0220 (fax)	12/01/2002 0220 (fax)	12/13/2002
			1,3-Butadiene	2,857	10	H				
			Nitrogen dioxide	69	10	H/EH				
			Nitrogen oxide	1,303	10	H				
			Xylene	148	100	H				
11/23/2002[1]	1430	1530	Nitrogen oxide	37.99	10	H	1545	1545 (fax)	1545 (fax)	12/11/2002
12/13/2002	2335	2340	Nitrogen dioxide	2.34	10	H/EH	12/14/2002 0130	12/14/2002 0130 (fax)	12/14/2002 0130 (fax)	12/27/2002
			Nitrogen oxide	44.46	10	H				
12/25/2002[1]	2200	1845	Nitrogen oxide	23.02	10	H	2100	2100 (fax)	2100 (fax)	01/17/2003
12/29/2002	1435	NA	Nitrogen oxide	16.91	10	H	12/30/2002 1400	12/30/2002 1400 (fax)	12/30/2002 1400 (fax)	01/10/2003
12/30/2002	1934	1935	Benzene	23.79	10	H	2010	2105 (fax)	2105 (fax)	01/13/2003
			1,3-Butadiene	21.12	10	H				
			Hexane	3	5,000	H				
			Isoprene	4.91	100	H				
			Nitrogen dioxide	44.21	10	H/EH				
			Nitrogen oxide	840.04	10	H				
			Styrene	4.17	1,000	H				
			Toluene	28.78	1,000	H				
			Xylene	18.92	100	H				
01/06/2003	2015	1025	Nitrogen oxide	11.21	10	H	1100	1055 (fax)	1055 (fax)	01/21/2003
01/12/2003	0743	0800	Benzene	167.47	10	H	0825	0900 (fax)	0900 (fax)	01/24/2003
			1,3-Butadiene	217.48	10	H				
			Hexane	17.74	5,000	H				
			Isoprene	44.20	100	H				
			Nitrogen dioxide	93.13	10	H/EH				
			Nitrogen oxide	1,769.43	10	H				
			Styrene	53.10	1,000	H				

[1] *Event was planned maintenance. Notified local agencies prior to the event.*

EPA/FOIA2018-00274

Date	Time	Time Safety Notified	Compound	Amount (lbs)	Reportable Quantity (lbs)	Hazardous/ Extremely Hazardous	NRC	LEPC	SERC	Follow-up Notification
			Toluene Xylene	182.24 118.86	1,000 100	H H				
01/30/2003	2347	2350	Nitrogen oxide	81.57	10	H	0026	0016 (fax)	0016 (fax)	02/13/2003
02/04/2003	1015	1024	Vinyl chloride	24.07	1	H	1049	1043 (fax)	1043 (fax)	02/18/2003
02/22/2003[1]	0745	02/21/2003 1440	Nitrogen oxide	338.14	10	H	0745	02/21/2003 1442 (fax)	02/21/2003 1442 (fax)	03/10/2003
03/30/2003	1150	1150	Ethylene dichloride Vinyl chloride	66.86 49.29	100 1	H H	1225	1225	1225	None provided
04/04/2003[1]	0000	04/02/2003 1700	Nitrogen dioxide Nitrogen oxide	10.81 205.43	10 10	H/EH H	04/02/2003 2350	04/02/2003 1655 (fax)	04/02/2003 1655 (fax)	04/18/2003
04/06/2003	2135	2139	Ethylene dichloride Hydrochloric acid Vinyl chloride	22.8 2.33 10.16	100 5,000 1	H H/EH H	2240	2240 fax)	2240 (fax)	05/21/2003
04/07/2003	0500	0500	Vinyl chloride	12.35	1	H	0600	0600 (fax)	0600 (fax)	04/21/2003
04/20/2003[1]	0815	04/19/2003 1532	Nitrogen dioxide	256	10	H/EH	0940	1535 (fax)	1535 (fax)	05/09/2003
05/28/2003	1503	1800	Benzene 1,3-Butadiene Naphthalene Xylene	48.48 35.76 106.24 151.27	10 10 100 10	H H H H	1910	1900 (fax)	1900 (fax)	06/06/2003
06/04/2003	1620	1635	Vinyl chloride	11.47	1	H	1650	1655 (fax)	1655 (fax)	06/20/2003
06/06/2003	0743	0745	Vinyl chloride	26.6	1	H	0810	0815 (fax)	0815 (fax)	06/20/2003
06/13/2003[1]	0045	06/09/2003 1550	Nitrogen dioxide	158.7	10	H/EH	06/09/2003 1600	06/09/2003 1608 (fax)	06/09/2003 1608 (fax)	06/25/2003
06/09/2003[1]	1215	1215	Nitrogen dioxide	3,708.64	10	H/EH	1543	1549 (fax)	1549 (fax)	07/09/2003
06/13/2003[1]	0000	0020	Nitrogen dioxide	136.86	10	H/EH	0730	0741 (fax)	0741 (fax)	07/07/2003
06/14/2003	0444	0530	Nitrogen dioxide	252.3	10	H/EH	0540	0557 (fax)	0557 (fax)	06/27/2003
06/14/2003	0449	0530	Nitrogen dioxide	169.88	10	H/EH	0540	0604 (fax)	0604 (fax)	06/27/2003
06/18/2003[1]	0400	1550	Nitrogen dioxide Nitrogen oxide	7.03 133.54	10 10	H/EH H	-	1603 (fax)	1603 (fax)	06/27/2003
06/22/2003[1]	1150	NA	Nitrogen dioxide Nitrogen oxide	1.34 25.51	10 10	H/EH H	1303	(fax)	(fax)	07/09/2003
06/22/2003[1]	1100	NA	Hexane Nitrogen dioxide Nitrogen oxide	101.52 3.74 71.3	5,000 10 10	H H/EH H	2020	(fax)	(fax)	07/10/2003
06/27/2003	0505	0543	Benzene 1,3-Butadiene Nitrogen dioxide Nitrogen oxide	266 233 99.66 1894	10 10 10 10	H H H/EH H	0655	0613 (fax)	0605 (fax)	07/09/2003

1 *Event was planned maintenance. Notified local agencies prior to the event.*
2 *Notification to NRC not indicated in facility documentation.*

EPA/FOIA2018-00275

Date	Time	Time Safety Notified	Compound	Amount (lbs)	Reportable Quantity (lbs)	Hazardous/ Extremely Hazardous	NRC	LEPC	SERC	Follow-up Notification
06/30/2003[1]	2130	1800	Nitrogen dioxide Nitrogen oxide	63.07 1,198.36	10 10	H/EH H	2145	1800 (fax)	1800 (fax)	07/29/2003
07/09/2003[1]	0345		Nitrogen dioxide Nitrogen oxide	55.18 1,048.34	10 10	H/EH H	0400	0401 (fax)	0401 (fax)	07/29/2003
07/12/2003[1]	1320	1630	Hexane Nitrogen dioxide Nitrogen oxide	5.85 3.39 64.38	5,000 10 10	H H/EH H	1655	1648 (fax)	1648 (fax)	07/25/2003
07/15/2003	1030	NA	Benzene 1,3-Butadiene Hexane Nitrogen dioxide Nitrogen oxide Toluene Xylene	98 209 1,414 31 595 37 10	10 10 5,000 10 10 1,000 10	H H H H/EH H H H	1115	1139 (fax)	1139 (fax)	08/01/2003
07/21/2003	1330	1330	Benzene Xylene	14.67 247.1	10 10	H H	1654	1654 (fax)	1654 (fax)	08/04/2003
07/24/2003	1000	1945	Ethylene dichloride	134	100	H	2015	2039 (fax)	2039 (fax)	08/06/2003
07/25/2003	0900	1549	Nitrogen dioxide Nitrogen oxide	14.3 271.68	10 10	H/EH H	1549	1638 (fax)	1638 (fax)	08/06/2003
07/28/2003[1]	1831	2200	Nitrogen oxide	167.67	10	H	2209	2200 (fax)	2200 (fax)	08/06/2003
08/01/2003[1]	0140	0140	1,3-Butadiene Benzene Isoprene Nitrogen oxide	1,422.76 209.08 445.29 3,760.16	10 10 100 10	H H H H	0150	0152 (fax)	0152 (fax)	08/15/2003
08/02/2003[1]	0040	0049	Hexane Nitrogen dioxide Nitrogen oxide	12.85 1 19.67	5,000 10 10	H H/EH H	0147	08/01/2003 1607 (fax)	08/01/2003 1607 (fax)	08/15/2003
08/15/2003[1]	2305	1500	Nitrogen dioxide Nitrogen oxide	1.55 29.52	10 10	H/EH H	08/16/2003 0604	1521 (fax)	1521 (fax)	08/28/2003
08/17/2003	2208	08/18/2003 0126	Nitrogen dioxide	122.90	10	H/EH	08/18/2003 0151	0150 (fax)	0150 (fax)	08/28/2003
08/20/2003	0720	0721	Vinyl chloride	7.773	1	H	0750	0744	0826 (fax)	09/02/2003
08/31/2003[2]	1900	09/01/2003 0905	Vinyl chloride	212.5	1	H	1005	1037 (fax)	1037 (fax)	09/15/2003
09/02/2003	2007		Ethylene dichloride Vinyl chloride	52.27 23.3	100 1	H H	2100	2045 (fax)	2045 (fax)	09/15/2003
09/10/2003	2258	0000	Vinyl chloride	86.3	1	H	0036	0038 (fax)	0038 (fax)	09/24/2003
09/11/2003	1830	2210	Vinyl chloride	7	1	H	2245	2249 (fax)	2249 (fax)	09/11/2003
09/18/2003	2215	2250	1,3-Butadiene	1,552.07	10	H	2315	2330 (fax)	2330 (fax)	09/30/2003

1 *Event was planned maintenance. Notified local agencies prior to the event.*
2 *Notifications completed after receipt of analytical results on samples taken at time of incident.*

EPA/FOIA2018-00276

Date	Time	Time Safety Notified	Compound	Amount (lbs)	Reportable Quantity (lbs)	Hazardous/ Extremely Hazardous	NRC	LEPC	SERC	Follow-up Notification
			Nitrogen dioxide	30.69	10	H/EH				
			Nitrogen oxide	583.1	10	H				
09/30/2003[1]	1900	10/01/2003 1140	Vinyl chloride	262.44	1	H	1245	1249 (fax)	1249 (fax)	10/14/2003
			Ethylene dichloride	118.25	100	H				
10/01/2003	1930	2153	Nitrogen oxide	97.56	10	H	2130	2144 (fax)	2144 (fax)	10/15/2003
10/08/2003	1730	1950	Vinyl chloride	1.77	1	H	2015	2020 (fax)	2020 (fax)	10/22/2003
10/16/2003	0830	10/20/2003 1545	Benzene	23.29	10	H	1651	1652 (fax)	1652 (fax)	10/30/2003
			Ethyl benzene	14.74	1,000	H				
			Hexane	137.42	5,000	H				
			m-Xylene	21.09	1,000	H				
			o-Xylene	15.62	1,000	H				
			p-Xylene	12.77	100	H				
12/07/2003	0315	0330	Vinyl chloride	35.55	1	H	0405	0608 (fax)	0608 (fax)	None provided

1 *Notifications completed after receipt of analytical results on samples taken at time of incident.*

EPA/FOIA2018-00277

Using the modeling methodology [Appendix B] explained in the Clean Air Act report, NEIC calculated the mass of VCM released each day. On 4 days in October and November 2003, Formosa released over 100 pounds each day (over 150 pounds on 2 days). NEIC reviewed facility release notification records for these 4 days and found that no reports had been submitted, although over 2,500 alarm events had occurred when VCM concentrations greater than or equal to 1 ppm were detected in the process unit. Based on the NEIC calculations, Formosa exceeded the 1-pound reportable quantity for vinyl chloride on a total of 258 days in the evaluation period, with only 1 day in which less than 1 lb. was released [Appendix C]. Over 50 lbs. were released on 41 days during the evaluation period. Appendix D shows 8 days when CERCLA/EPCRA reports identifying VCM plant releases of vinyl chloride were submitted during the evaluation period. Thus, based on the mass VCM emission rates calculated by NEIC, Formosa failed to submit CERCLA/EPCRA reports for VCM releases above the reportable quantity, on 250 days during 2003 [AON 1 and 2]. 7(B)

Formosa may have failed to report VCM releases above the reportable quantity for 2001 and 2002 [Area of Concern (AOC) A]. NEIC believes the ambient data collected in 2003 to be representative of the 2001 through 2002 timeframe, despite events such as Hurricane Claudette in July 2003, because (1) no VCM release reports were submitted by the company for the hurricane period; (2) the number of leaks (greater than 1 ppm) recorded per month increased after the hurricane, but then decreased and increased to a new maximum (showing the hurricane was not the source of the increasing leak trend); and (3) general statements from VCM plant personnel about emergency capacity present in the VCM process to avert releases. 7(B)

Community Right-to-Know Requirements (EPCRA §§ 311 and 312)

Based on review of transmittal letters for reporting years 2000, 2001, and 2002, Formosa has submitted the Tier II inventory to the Port Lavaca Fire Department, LEPC (Calhoun County Emergency Protection Committee), and SERC (Texas Department of Health). Hazardous chemical MSDSs or a list of hazardous chemicals brought onsite and exceeding the extremely hazardous threshold or hazardous chemical threshold are not submitted to the local fire department, LEPC and SERC within 3 months, as required. Formosa did not provide notification to the local fire department, LEPC, or SERC for new chemicals brought onsite from 2000 through 2003 [AON 4]. Based on the information provided by Formosa, NEIC could not determine how many chemicals were affected by this requirement. 7(B)

EPA/FOIA2018-00278

Toxic Chemical Release Inventory Reporting (EPCRA § 313)

Formosa has submitted Toxic Chemical Inventory Reporting Forms (Form R's and A's) for chemicals present in amounts above the threshold quantities. Formosa reported approximately 766,391 pounds (total) of 43 chemicals released from its operations during 2002. The following is a listing of the reported released/transferred chemicals from Formosa in 2000, 2001, and 2002.

- 1,1,1,2-tetrachloroethane
- 1,1,2,2-tetrachloroethane
- 1,1,2-trichloroethane
- 1,2,4-trimethylbenzene
- 1,2-dichloroethane
- 1,2-dichloroethylene
- 1,3-butadiene
- 4,4'-isopropylidenediphenol
- acetaldehyde
- ammonia
- benzene
- carbon tetrachloride
- chlorine
- chlorobenzene
- chloroethane
- chloroform
- chloromethane
- chloroprene
- chromium
- copper
- cumene
- cyclohexane
- dichlorodifluoromethane
- dichloromethane
- dicyclopentadiene
- dioxin and compounds
- ethyl benzene
- ethylene
- ethylene glycol
- ethylene oxide
- ethylidene dichloride
- hexachlorobenzene
- hydrochloric acid
- methanol
- n-hexane
- naphthalene
- propylene
- propylene oxide
- styrene
- tetrachloroethylene
- titanium tetrachloride
- toluene
- vinyl chloride
- xylene

Threshold quantities for the manufacturing, processing, and otherwise use thresholds were provided by Formosa in their background documents. Table 2 contains the thresholds provided by the facility.

[Anthracene exceeded the 25,000-pound threshold for processing in 2000; however, no Form R was submitted. Additionally, there is no threshold calculation for anthracene in 2001 and 2002 [AON 5].] 7(B)

Formosa submitted a Form R for chloromethane in 2002 because 46,661 pounds of chloromethane were manufactured as a byproduct in the VCM plant. [However, Formosa's 2000 and 2001 background documentation does not contain threshold calculations for chloromethane. Based on production in the VCM plant in 2000 and 2001, it appears the amount of chloromethane manufactured in the VCM plant would have exceeded the 25,000-pound threshold and, therefore, Form Rs should have been submitted [AOC B].] 7(B)

Threshold determinations for persistent bioaccumulative toxic (PBT) chemicals such as mercury, lead, and polycyclic aromatic compounds (PACs) should be reviewed by Formosa. Based on the background information provided by Formosa, the PBT chemicals were not thoroughly evaluated at the reduced thresholds beginning in 2000. [Glycol ethers and sulfuric acid thresholds should also be evaluated to confirm that these chemicals should not be reported since both of these chemicals are used at Formosa. Facilities similar to Formosa have reported for these chemicals [AOC C]. 7(B)

Table 2

2000, 2001, 2002 THRESHOLD QUANTITIES (in pounds)
Formosa Plastics Corporation - Texas
Point Comfort, Texas

TRI Chemical	2000	2001	2002
1,1,1,2-Tetrachloroethane	89,040 (M[1])	76,670 (M)	93,194 (M)
1,1,2,2-Tetrachloroethane	89,040 (M)	76,670 (M)	93,152 (M)
1,1,2-Trichloroethane	3,919,871 (M)	3,360,570 (M)	3,777,341 (M)
1,2,4-Trimethylbenzene	20,180,648 (M) 26,591,844 (P[2])	55,678,306 (M) 26,941,821 (P)	73,821,687 (M) 44,295,359 (P)
1,2-Dichloroethane (Ethylene dichloride)	2,554,574,168 (M) 2,335,894,000 (P) 15,627 (O[3])	2,310,390,156 (M) 2,075,246,000 (P) 16,708 (O)	2,636,732,532 (M) 1,703,371,314 (P) 18,478 (O)
1,1-Dichloroethane (Ethylidene dichloride)	638,119 (M)	549,466 (M)	667,712 (M)
1,2-Dichloroethylene	222,600 (M)	191,674 (M)	232,881 (M)
1,3-Butadiene	121,097,909 (M) 119,035,880 (P)	122,860,691 (M) 110,065,100 (P)	220,374,832 (M) 2,244,995 (P)
4,4'-isopropylidenediphenol	355,827 (O)	0 (O)	0 (O)
Acetaldehyde	125,015 (M)	133,345 (M)	147,480 (M)
Ammonia	31,258 (O)	34,992 (O)	32,326 (O)
Anthracene	3,910,127 (P)	NI[4]	NI
Benzene	276,822,125 (M) 312,251,279 (P)	320,543,267 (M) 326,670,910 (P)	471,533,087 (M) 439,932,686 (P)
Carbon tetrachloride	237,439 (M)	204,453 (M)	248,406 (M)
Chlorine	1,571,306,447 (M) 1,539,761,195 (P) 411,814 (O)	1,404,524,494 (M) 1,384,521,067 (P) 582,925 (O)	1,592,392,045 (M) 1,569,401,054 (P) 928,000 (O)
Chlorine dioxide	17,697 (M) 17.697 (P)	29,072 (M) 29,072 (P)	0 (M) 0 (P)
Chlorobenzene	44,520 (M)	38,335 (M)	46,618 (M)
Chloroethane (Ethyl chloride)	1,374,592 (M)	50,211 (M)	59,908 (M)
Chloroform	1,142,678 (M)	983,928 (M) 209 (P)	1,195,456 (M) 368 (O)
Chloromethane (Methyl chloride)	NI	NI	46,661 (M)
Chloroprene	1,009,118 (M)	868,924 (M)	1,055,728 (M)
Chromium	3,443 (O)	NI	NI
Chromium compounds	4,017 (O)	NI	NI
Cobalt	52 (O)	NI	NI
Copper	14,366 (O)	9,885 (O)	11,095 (O)
Cumene	728,514 (M) 789,118 (P)	733,853 (M) 739,189 (P)	1,248,906 (M) 1,011,705 (P)
Cyclohexane	1,367,987 (M) 24,668,955 (P)	1,378,012 (M) 23,524,371 (P)	2,345,168 (M) 49,146,061 (P)
Chlorodifluoromethane (HCFC-22)	1,490 (O)	730 (O)	1,000 (O)
Dichlorodifluoromethane (CFC-12)	8,197 (O)	23,500 (O)	13,805 (O)

EPA/FOIA2018-00280

TRI Chemical	2000	2001	2002
Dichloromethane (Methylene chloride)	6,000 (O)	0 (O)	10,800 (O)
Di-(2-ethylhexyl) phthalate (DOP)	8,100 (O)	0 (O)	0 (O)
Dicyclopentadiene	22,328,954 (M) 23,928,448 (P)	22,492,588 (M) 22,340,987 (P)	38,278,965 (M) 30,739,093 (P)
n,n-Dimethylformamide	278 (P)	152 (P)	118 (O)
Dioxin and dioxin-like compounds (PBT)	155 grams (O)	155 grams (M)	NI
Ethyl benzene	21,292,736 (M) 63,689,802 (P)	24,526,685 (M) 63,246,492 (P)	35,158,145 (M) 80,124,526 (P)
Ethylene	1,631,638,000 (M) 2,146,267,259 (P)	1,569,610,000 (M) 2,104,242,901 (P)	2,568,982,860 (M) 2,976,967,477 (P)
Ethylene glycol	655,614,000 (M) 634,591,500 (P) 16,185 (O)	667,930,000 (M) 707,408,000 (P) 7,536 (O)	756,954,000 (M) 934,302,037 (P) 300 (O)
Ethylene oxide	472,418,000 (M)	481,202,000 (M)	582,245,136 (M)
Formaldehyde	9,560 (M)	10,197 (M)	11,278 (M)
Formic Acid	5,699 (M)	6,079 (M)	7,235 (M)
n-Hexane	12,137,074 (M) 127,986,668 (P)	12,239,573 (M) 128,401,619 (P)	19,396,710 (M) 273,751,975 (P) 3,903,487 (O)
Hexachlorobenzene	18,103 (O)	18,103 (M)	NI
Hydrochloric acid	32,738,244 (M) 29,994,339 (P) 588 (O)	37,051,929 (M) 28,748,134 (P) 838,000 (O)	31,496,986 (M) 25,197,583 (P) 960,000 (O)
Hydroquinone	3,012 (O)	2,664 (O)	3,375 (O)
Manganese	7,015 (O)	NI	NI
Methanol	294,308 (O)	47,720 (O)	74,486 (O)
Naphthalene	39,198,464 (M) 49,243,678 (P)	44,872,200 (M) 64,988,983 (P)	67,839,237 (M) 1,008,858,198 (P)
Nickel	3,196 (O)	NI	NI
Propylene (Propene)	364,174,000 (M) 626,520,000 (P) 708,748,128 (O)	377,902,000 (M) 1,175,900,770 (P)	690,784,720 (M) 1,514,996,230 (P)
Propylene oxide	922,264 (O)	917,780 (O)	230,980 (O)
Sodium nitrite	3,200 (O)	0 (O)	0 (O)
Styrene	17,868,830 (M) 19,156,462 (P)	17,999,778 (M) 18,041,012 (P)	30,632,886 (M) 24,497,687 (P)
Sulfuric acid (acid aerosol)	0 (O)	0 (O)	0 (O)
Tetrachloroethylene (Perchloroethylene)	1,068,478 (M)	920,037 (M)	1,117,829 (M)
Titanium tetrachloride	2,155 (P) 29,180 (O)	28,933 (P)	2,727 (P) 36,722 (O)
Toluene	148,286,068 (M) 194,751,567 (P)	149,571,991 (M) 115,934,019 (P)	233,483,115 (M) 285,936,326 (P)
Vinyl chloride	789,360,000 (M) 1,052,602,561 (P)	751,664,000 (M) 992,694,790 (P)	843,774,787 (M) 1,165,789,606 (P)
Xylene	40,474,668 (M) 130,723,211 (P)	38,909,029 (M) 79,963,950 (P)	61,207,427 (M) 179,820,582 (P)

1 *M = Manufacturing*
2 *P = Processing*
3 *O = Otherwise use*
4 *NI = No threshold information was provided by Formosa in the background documentation*

Formosa uses a combination of emission factors and correlation equations (fugitive air), source test results and mass balance calculations (stack air), monitoring data (water) and engineering estimates (fugitive air and off-site transfers) to calculate releases and off-site transfers. A summary of the 2000 through 2002 form submittals is presented in Table 3.

EPA/FOIA2018-00281

Fugitive Air Releases

Formosa uses the annual air emissions inventory and associated calculations completed for the Texas Commission on Environmental Quality (TCEQ) as background documentation for calculating fugitive air and stack air releases of toxic chemicals. Formosa's fugitive emissions calculations primarily include equipment component monitoring data (as part of their CAA leak detection and repair program), but also include maintenance activities (i.e., equipment opening and reactor opening losses) and cooling tower emissions for some reported chemicals in some process units.

Table 3

SUMMARY OF FORM SUBMITTALS 2000, 2001, AND 2002
(in pounds unless otherwise noted)
Formosa Plastics Corporation
Point Comfort, Texas

Chemical	Reporting Year		
	2000	2001	2002
1,1,1,2-Tetrachloroethane			
Releases			
Fugitive air	3	1	2.57
1,1,2,2-Tetrachloroethane			
Releases			
Fugitive air	3	1	NA[1]
Off-site transfers	114,630	30,171	
1,1,2-Trichloroethane			
Releases			
Fugitive air	68	32	23
Off-site transfers	2,673,055	684,102	36,618
1,2,4-Trimethylbenzene			
Releases			
Fugitive air	1,167	102	52.46
Stack air	3,231	3,008	3,313.94
1,2-Dichloroethane			
Releases			
Fugitive air	8,314	3,404	14,634.66
Stack air	1,712	1,710	4157.29
Water	10	32	37.64
Off-site transfers	4,687,814	1,457,257	11,555
1,2-Dichloroethylene			
Releases			
Fugitive air	5	5	32
Stack air	22	19	NA
Off-site transfers	317,280	363,056	NA
1,3-Butadiene			
Releases			
Fugitive air	390	575	2,154
Stack air	2,301	179	14,460.09
4,4'-Isopropylidenediphenol			
Releases			
Fugitive air	31		
Acetaldehyde			
Releases			
Fugitive air	1,671	1,697	2,098.94
Ammonia			
Releases			
Fugitive air	1	1	6

EPA/FOIA2018-00282

Chemical		Reporting Year 2000	2001	2002
	Stack air	0	0	16.57
	Water	256	377	368.4
Benzene				
Releases				
	Fugitive air	847	2,092	3,349
	Stack air	4,263	5,532	13,126.94
Off-site transfers		288,093	59,489	290
Carbon Tetrachloride				
Releases				
	Fugitive air	3	2	6
	Stack air	24	20	7
Off-site transfers		2,044,101	272,126	1,591
Chlorine				
Releases				
	Fugitive air	653	568	586.57
	Stack air	4,406	11,064	4,044.83
	Water	798	290	130.9
Chlorobenzene				
Releases				
	Fugitive air	5	2	1
Off-site transfers		61,614	29,220	NA
Chloroethane				
Releases				
	Fugitive air	136	7	58
	Stack air	5	136	133.2
Chloroform				
Releases				
	Fugitive air	12	8	26
	Stack air	114	2,065	3,391.76
	Water	98	60	32.45
Off-site transfers		1,294,613	252,887	NA
Chloromethane				
Releases				
	Fugitive air			NA
	Stack air			1.5
Chloroprene				
Releases				
	Fugitive air	11	7	23
	Stack air	102	87	5
Off-site transfers		356,036	94,862	NA
Chromium				
Releases				
	Fugitive air			13.38
	Stack air			6
	Water			3.1
Off-site transfers				502
Copper				
Releases				
	Water	245		249.67
Off-site transfers		8082		2174
Cumene				
Releases				
	Fugitive air	0	0	0
	Stack air	NA	NA	0.71
Cyclohexane				
Releases				
	Fugitive air	72	105	164.46
	Stack air	1623	1618	1609.55
Dichlorodifluoromethane				
Releases				
	Fugitive air		19,936	13,727
	Stack air		2,762	0

EPA/FOIA2018-00283

Chemical	Reporting Year 2000	2001	2002
Dichloromethane (Methylene Chloride)			
Releases			
Fugitive air			221
Off-site transfers			2,827
Dicyclopentadiene			
Releases			
Fugitive air	4	0	0
Stack air	NA	2	0.32
Dioxin & Dioxin-like compounds		(Units in grams)	
Releases			
Fugitive air	0.0001	0.0001	0.0001
Stack air	1.61	1.47	1.66
Water	0.61	NA	NA
Off-site transfers	153.007	190.792	146.893
Ethylbenzene			
Releases			
Fugitive air	1569	379	589.95
Stack air	1637	1876	2481.04
Off-site transfers	2	2	4
Ethylene			
Releases			
Fugitive air	10,973	13,853	23,644
Stack air	120,347	90,115	505,621.94
Ethylene glycol			
Releases			
Fugitive air	4,706	482	1,998.23
Stack air	850	592	1,685.86
Off-site transfers	3	NA	NA
Ethylene oxide			
Releases			
Fugitive air	67	99	253
Stack air	609	644	683.4
Ethylidene dichloride			
Releases			
Fugitive air	7	5	14
Hexachlorobenzene			
Releases			
Fugitive air	3	2	2
Stack air	2	1	1
Off-site transfers	1,865	NA	NA
Hydrochloric acid			
Releases			
Fugitive air	703	632	1,134.2
Stack air	5,031	2,448	1,826.11
Off-site transfers	87	4	NA
Methanol			
Releases			
Fugitive air	336	424	670.7
Stack air	34,340	1,760	1,920
Off-site transfers	817	0	0
n-Hexane			
Releases			
Fugitive air	3,179	4,256	5,221.73
Stack air	16,853	19,894	28,409.50
Off-site transfers	115,735	2,564	2,265
Naphthalene			
Releases			
Fugitive air	69	193	320
Stack air	130	107	5,268.23

Chemical	Reporting Year 2000	2001	2002
Propylene			
Releases			
Fugitive air	10,732	12,412	20,771.5
Stack air	30,562	25,578	52,398.39
Off-site transfers	NA	1	1
Propylene oxide			
Releases			
Fugitive air	0	0	NA
Stack air	1,587	760	421.5
Styrene			
Releases			
Fugitive air	71	140	517.1
Stack air	59	72	1,606.93
Off-site transfers	8	7	13
Tetrachloroethylene			
Releases			
Fugitive air	38	17	5
Off-site transfers	856,041	209,322	NA
Titanium tetrachloride			
Releases			
Fugitive air	2	0	NA
Stack air	2	2	NA
Off-site transfers	319	383	248
Toluene			
Releases			
Fugitive air	1,291	1,177	2,071.61
Stack air	509	2,053	5,628.95
Water	NA	NA	1.5
Off-site transfers	40	36	67
Vinyl chloride			
Releases			
Fugitive air	3,304	4,206	2,858
Stack air	4,300	4,220	5,921.3
Off-site transfers	65,230	12,269	NA
Xylene			
Releases			
Fugitive air	4,167	582	1,399.37
Stack air	3,713	3,902	8,139.53
Off-site transfers	1,494	324	4

1 Non-applicable box checked on Form R

[Formosa underreported air emissions in Section 5 for reporting years 2000 and 2001 for the toxic chemicals and quantities listed in Table 4 [AON 4].] Formosa reported 16 chemicals in Section 8.8 of the Form Rs in reporting year 2000 for a total of 86,778 pounds and 8 chemicals in Section 8.8 of the Form Rs in reporting year 2001 for a total of 135,326 pounds. Formosa failed to include the chemical releases reported in Section 8.8 in Section 5 as either fugitive or stack air emissions for the 2000 and 2001 reporting years. Formosa needs to correct reporting year 2000 and 2001 Form Rs to include releases reported in Section 8.8 but not in Section 5 [Table 4]. 7(B)

[Fugitive air volatile organic compound (VOC) emissions from the combined wastewater treatment plant (CWTP) were speciated into listed toxic chemicals for reporting year 2002 but were not included in the utilities fugitive emissions calculations [AON 4].] Fugitive emissions 7(B

from the CWTP totaling 11,540 pounds for 1,2-dichloroethane, acetaldehyde, benzene, ethylene, n-hexane, naphthalene, propylene, propylene oxide, styrene, toluene, and xylene were not included [Table 5]. This fugitive emission source was also not included in 2000 and 2001; however, the VOC emissions were not speciated out for those years.

Table 4

FORM R FUGITIVE AND STACK AIR EMISSIONS COMPARISON OF SECTION 5 TO SECTION 8.8
Formosa Plastics Corporation
Point Comfort, Texas

Chemical/Release Medium	Year	Section 5 - Amount Reported (lbs)	Section 8.8 Amount Reported (lbs)	NEIC Amount (lbs)	Amount in Error (lbs)
1,1,2,2-Tetrachloroethane/Stack air	2000	0	13	13	13
1,1,2-Trichloroethane/Stack air	2000	0	155	155	155
1,3 - Butadiene/Stack air	2000	2,301	2,992	5,293	2,992
1,3-Butadiene/Fug. Air	2001	575	1,500	2,075	1,500
1,2-Dichloroethane (EDC)/Fug. Air	2000	8,314	808	9,405	1,091[a]
1,2-Dichloroethane (EDC)/Fug. Air	2001	3,404	698	4,102	698
Benzene/Fug. Air	2000	847	849	1,696	849
Benzene/Fug. Air	2001	2,092	263	2,355	263
Chlorine/Fug. Air	2000	653	5	658	5
Cyclohexane/Fug. Air	2000	72	3	75	3
Ethylbenzene/Fug. Air	2000	1,569	8	4,760	3,191[a]
Ethylene/ Fug. Air	2000	10,973	44,749	55,439	44,466[a]
Ethylene/ Fug. Air	2001	13,853	100,792	114,645	100,792
Ethylene glycol/Fug. Air	2000	4,706	530	5,236	530
Ethylene oxide/Fug. Air	2000	67	22	89	22
Ethylene oxide/Fug. Air	2001	99	15	114	15
n-Hexane/Fug. Air	2000	3,179	19,105	22,284	19,105
n-Hexane/Fug. Air	2001	4,256	814[b]	5,070	814
Hydrochloric acid/Fug. Air	2000	703	968	1,671	968
Propylene/Fug. Air	2000	10,732	10,830	21,562	10,830
Propylene/Fug. Air	2001	12,412	28,200	41,162	28,750[a]
Styrene/Fug. Air	2000	71	32	103	32
Tetrachloroethylene/Fug. Air	2000	38	96	134	96
Toluene/Fug. Air	2000	1,291	327	3,976	2,685[a]
Vinyl Chloride/Fug. Air	2000	3,304	8,438	11,742	8,438
Vinyl Chloride/Fug. Air	2001	4,206	3,044	7,250	3,044
Xylene/Fug. Air	2000	4,167	8	11,801	7,634[a]
TOTAL		93,884	225,264	332,865	238,981[a]

a Additional reporting errors other than releases from Section 8.8
b Includes 750 pounds reported in Section 8.8 plus an air release of 64 pounds from LLDPE

EPA/FOIA2018-00286

Table 5

FUGITIVE EMISSIONS FROM UTILITIES CWTP FOR REPORTING YEAR 2002
Formosa Plastics Corporation
Point Comfort, Texas

Chemical	Formosa Reported (lbs)	NEIC Calculated (lbs)
1,2-Dichloroethane	0	140
Acetaldehyde	0	2,120
Benzene	0	2,260
Ethylene	0	280
n-Hexane	0	3,380
Naphthalene	0	840
Propylene	0	980
Propylene Oxide	0	280
Styrene	0	420
Toluene	0	700
Xylene	0	140
TOTAL	0	11,540

Fugitive emissions for the paints and solvents used by the Formosa maintenance department contractors for reporting year 2000 were incorrectly calculated [Appendix E]. NEIC used material safety data sheets and volumes provided by Formosa for NEIC's calculations and did not calculate the same fugitive quantities as Formosa. [Ethyl benzene, toluene, xylene, and 1,2,4-trimethylbenzene were underreported because the incorrect densities were used by Formosa for the emissions calculations [AON 4].] Table 6 is a comparison of the Formosa reported and NEIC calculated pounds for fugitive releases from maintenance contractor paints and solvents. 7(B)

Table 6

COMPARISON OF FUGITIVE EMISSIONS FROM MAINTENANCE CONTRACTOR PAINTS/SOLVENTS FOR REPORTING YEAR 2000
Formosa Plastics Corporation
Point Comfort, Texas

Chemical	Formosa Reported (lbs)	NEIC Calculated (lbs)
Ethyl benzene	1,441	4,624
Toluene	839	3,197
Xylene	3,903	11,520
1,2,4-trimethylbenzene	1,133	2,579

VCM Plant Fugitives

Formosa performs ambient air monitoring for vinyl chloride in both the PVC and VCM processing units as part of the Clean Air Act (CAA) requirements under the Vinyl Chloride NESHAP. NEIC collected available mass spectrometer data from the VCM unit for 259 days between February and November 2003 (hereafter the evaluation period), operator logs on leak identification, and repairs during this timeframe. NEIC reviewed the mass vinyl chloride emission rate, projected based on the evaluation period for an entire calendar year, in order to validate reported emissions calculations and release events.

EPA/FOIA2018-00287

As discussed previously in the emergency notification reporting section of this report, VCM mass emission rates can be estimated from Formosa's concentration data by applying basic emissions modeling principles [Appendix B]. NEIC evaluated the facility VCM plant ambient monitoring data, and determined Formosa may be underreporting vinyl chloride emissions from fugitive sources.

Table 7 shows VCM unit annual emission data from Formosa's Form Rs and background calculations for 2000 through 2002 [Appendix C], as well as CERCLA/EPCRA reports submitted during the evaluation period in 2003 [Appendix E]. Total annual vinyl chloride emissions from the VCM plant ranged from approximately 1,600 to 3,200 lbs/yr between 2000 and 2002.

Table 7

REPORTED/RECORDED POUNDS OF VCM PLANT VINYL CHLORIDE EMITTED
Formosa Plastics Corporation
Point Comfort, Texas

Time Period	Data Source	Point Source	Fugitive Emissions	Releases	Total
2000	TRI Background	0	914.57	673.12	1,588
2001	TRI Background	0	1,493	1,689	3,182
2002	TRI Background	54.3	356	2,727	3,137.3
2003 Evaluation Period	CERCLA Reports	Not available	Not available	541.9	

Each emission type was then evaluated to determine the baseline emission rate against which to compare the NEIC-calculated rates. Due to dispersion, VCM from point (stack) sources was not believed to impact ambient monitors (mostly ground level) in the VCM plant. Fugitive emissions, expected to generally occur continuously from plant process equipment, were believed to be the category most accurately accounted for by the ambient monitoring system because the monitoring locations are dispersed throughout VCM plant equipment. NEIC conservatively selected the highest value (1,493 lbs.) reported for fugitive emissions between 2000 and 2002 to include in the facility VCM emissions baseline. VCM from release events was believed to be somewhat accounted for by the ambient system, depending on the source of the release: releases high in the air might not be recorded at all, while ground-level releases might be fully characterized depending on wind direction and other factors during the release. Appendix F supports this conclusion: of the 541.9 lbs. reported released by Formosa during the 2003 evaluation period, only 136.4 lbs. were detected by the ambient monitoring system. [Therefore, VCM during the release events was only partially quantified by the ambient monitoring system, and the undetected amount (405.5 lbs.) needs to be added to the NEIC estimate when comparing fugitive VCM emissions in the plant.] 7(B)

Table 8 shows the baseline emissions estimate for non-point sources, based on Formosa's report (or report background) information. Also shown in the table are emissions estimates based on ambient monitoring. [Formosa appears to have underreported fugitive emissions of] 7(B)

[vinyl chloride monomer from the VCM plant by roughly 9,000 lbs. annually from 2000 through 2002. Formosa most likely also underreported fugitive emissions of vinyl chloride monomer from the PVC plant because they have ambient air monitors present and are not including the information in their EPCRA vinyl chloride fugitive emissions calculations [AOC D]. Actual emissions appear to be over five times higher than reported during this timeframe.] NEIC believes the ambient data collected in 2003 to be representative of the 2000 through 2002 timeframe. For a complete discussion of the VCM plant ambient air monitoring review, refer to the CAA section of this report. 7(B)

Table 8

EMISSIONS ESTIMATE COMPARISON AND UNDERREPORTED VINYL CHLORIDE EMISSIONS
Formosa Plastics Corporation
Point Comfort, Texas

Emissions Baseline from Reported Information	Emissions Estimate from Ambient Monitoring	Ratio Ambient/ Report (lbs/yr)	Under-Reported Amount (lbs/yr)
Highest of reported fugitive emissions from 2000-2002, or 1493 lbs/yr	Based on ambient VCM modeling and standard model factors, or 11,034 lbs/yr		
Individual release events,[1] or 541.9 lbs/yr	Non-detected portion of individual release events, or 405.5 lbs/yr		
Total = 2035 lbs/yr	Total = 11443 lbs/yr	5.62	9408

1 *Although only release events recorded/reported during the evaluation period were considered, emissions recorded outside this period would be equally added to both emissions estimates.*

Stack Air Releases

NEIC reviewed Formosa's stack air release calculations for reporting years 2000 through 2002. Formosa used a combination of mass balances, emission factors, engineering estimates, continuous emissions monitoring systems (CEMS), and stack tests to calculate stack air emissions (As noted in the fugitive air section, Formosa uses the annual air emissions inventory as background documentation). [Formosa did not include three chemicals (1,1,2,2-tetrachloroethane, 1,1,2-trichloroethane, and 1,3-butadiene) in Section 5 stack air emissions for reporting year 2000 that were reported in Section 8.8. The underreported stack air emissions total 3,160 pounds [Table 4] [AON 4].] Other discrepancies found in Formosa's reported stack air emissions, primarily failure to include all emissions sources listed in the background documentation on the release summary sheets, are included in the data quality errors table [Table 9]. 7(B)

Water Releases

Formosa calculates water releases using discharge monitoring reports required as part of the NPDES permit. The discharge monitoring reports are generated using actual sampling data

EPA/FOIA2018-00289

and flow measurements. No discrepancies were found during the NEIC review of the water releases for reporting years 2000 through 2002.

Off-site Transfers

NEIC reviewed off-site transfers reported by Formosa for reporting years 2000 through 2002. Overall, off-site transfers decreased significantly from 2000 to 2002 due to a reclassification of distillation ends from a waste to a product. (See RCRA report for more detailed information.) In April 2001, Formosa began shipping distillation ends from the EDC and VCM processes as a product. Therefore, Formosa does not include this source in the off-site transfer calculations after April 2001 for 12 chemicals including: 1,1,2,2-tetrachloroethane, 1,1,2-trichloroethane, 1,2-dichloroethane, 1,2-dichloroethylene, benzene, carbon tetrachloride, chlorobenzene, chloroform, chloroprene, hexachlorobenzene, tetrachloroethylene, and vinyl chloride. No discrepancies were found during the NEIC review of the off-site transfers for reporting years 2000 through 2002.

Section 8

Formosa reported more one-time chemical releases in Section 8.8 of the 2000 and 2001 Form Rs than NEIC typically sees reported on Form Rs. Formosa reported 19 chemicals in Section 8.8 for reporting year 2000 and 8 chemicals for reporting year 2001. Section 8.8 should only include the quantity of toxic chemical released to the environment as a result of remedial actions, catastrophic events, or one-time events not associated with production processes. In reporting year 2002, Formosa included a 2,727 pound stack air release of vinyl chloride in both Section 5 and Section 8.8. However, after the NEIC on-site inspection, Formosa determined that the 2,727 pounds of vinyl chloride reported in Section 8.8 as a one-time event, was actually a compilation of releases for the entire year [Appendix G].

The toxic chemical releases reported in Section 8.8 for 2000, 2001, and 2002 should not have been included in section 8.8 because the releases do not meet the definition of a one-time release and are typically production related releases. If the releases reported in section 8.8 do meet the definition above, these releases must be included in Section 5 of the Form R, as required and previously discussed in the fugitive air release section. [Formosa should submit corrected Form Rs for reporting years 2000, 2001, and 2002. The toxic chemicals should be removed from Section 8.8 reporting (unless they meet the definition above) and accurately reported in Section 5 under the appropriate release category [AOC E].] 7(B)

EPA/FOIA2018-00290

Table 9

DATA QUALITY ERRORS FOUND IN FORMOSA'S TOXIC RELEASE REPORTING
Formosa Plastics Corporation
Point Comfort, Texas

	2000	2000	2000	2000	2001	2001	2001	2001	2002	2002	2002	2002
Chemical/Release Medium	Amount Reported (lbs)	NEIC Amount (lbs)	Amount in Error (lbs)	Percent Difference	Amount Reported (lbs)	NEIC Amount (lbs)	Amount in Error (lbs)	Percent Difference	Amount in Error (lbs)	NEIC Amount (lbs)	Amount in Error (lbs)	Percent Difference
1,1,2,2-Tetrachloroethane/Stack air	0	13	13	∞	-	-	-	-	-	-	-	-
1,1,2-Trichloroethane/Stack air	0	155	155	∞	-	-	-	-	NA	46	46	∞
1,3 Butadiene/Stack air	2,301	5,293	2,992	130	-	-	-	-	-	-	-	-
1,3-Butadiene/Fug. Air	-	-	-	-	575	2,075	1,500	261	2,154	1,445	-709	-33
1,2,4-Trimethylbenzene/Stack Air	-	-	-	-	-	-	-	-	3,314	3,551	237	7
1,2,4-Trimethylbenzene/Fug. Air	1,167	2,613	1,446	124	-	-	-	-	52	185	133	254
1,2-Dichloroethane (EDC)/Stack Air	-	-	-	-	1,710	2,473	763	45	4,157	14,737	10,580	254
1,2-Dichloroethane (EDC)/Fug. Air	8,314	9,405	1,091	13	3,404	4,102	698	21	14,635	17,019	2,384	16
Acetaldehyde/Fug. Air	-	-	-	-	-	-	-	-	2,099	4,220	2,121	101
Benzene/Stack Air	-	-	-	-	-	-	-	-	13,127	10,789	-2,338	-18
Benzene/Fug. Air	847	1,696	849	100	2,092	2,355	263	13	3,349	5,098	1,749	52
Chlorine/Fug. Air	653	658	5	0.77	-	-	-	-	-	-	-	-
Chlorobenzene/Stack air	-	-	-	-	-	-	-	-	NA	42	42	∞
Cyclohexane/Fug. Air	72	75	3	4	-	-	-	-	164	122	-42	-26
Dichlorodifluoromethane/Stack air	-	-	-	-	-	-	-	-	0	72	72	∞
Dichlorodifluoromethane/Fug. air	-	-	-	-	-	-	-	-	13,727	13,000	-727	-5
Dichloromethane (Methylene Chloride)/ Fug. air	-	-	-	-	-	-	-	-	221	5,049	4,828	2,185
Dicyclopentadiene/Stack Air	-	-	-	-	-	-	-	-	0.32	5	5	1,444
Dicyclopentadiene/Fug. Air	4	0	-4	-100	-	-	-	-	-	-	-	-
Ethylbenzene/Stack Air	-	-	-	-	-	-	-	-	2,481	2,059	-422	-17
Ethylbenzene/Fug. Air	1,569	4,760	3,191	203	-	-	-	-	-	-	-	-
Ethylene/ Fug. Air	10,973	55,439	44,466	405	13,853	114,645	100,792	728	23,644	23,924	280	1
Ethylene glycol/Stack Air	-	-	-	-	-	-	-	-	1,686	1,086	-600	-36
Ethylene glycol/Fug. Air	4,706	5,236	530	11	-	-	-	-	1,998	1,628	-370	-19
Ethylene oxide/Fug. Air	67	89	22	33	99	114	15	15	-	-	-	-
n-hexane/Stack Air	-	-	-	-	-	-	-	-	28,410	33,054	4,644	16
n-hexane/Fug. Air	3,179	22,284	19,105	601	4,256	5,070	814	19	5,222	8,403	3,181	61
Hydrochloric acid/Fug. Air	703	1,671	968	138	-	-	-	-	1,134	1,143	9	1
Naphthalene/Stack air	-	-	-	-	-	-	-	-	5,268	4,818	-450	-9
Naphthalene/Fug. air	-	-	-	-	-	-	-	-	320	1,160	840	263

EPA/FOIA2018-00291

Chemical/Release Medium	2000 Amount Reported (lbs)	2000 NEIC Amount (lbs)	2000 Amount in Error (lbs)	2000 Percent Difference	2001 Amount Reported (lbs)	2001 NEIC Amount (lbs)	2001 Amount in Error (lbs)	2001 Percent Difference	2002 Amount in Error (lbs)	2002 NEIC Amount (lbs)	2002 Amount in Error (lbs)	2002 Percent Difference
Propylene/Stack Air	-	-	-	-	-	-	-	-	52,398	46,807	-5,591	-11
Propylene/Fug. Air	10,732	21,562	10,830	101	12,412	41,162	28,750	232	20,772	22,783	2,011	10
Propylene Oxide/Fug. Air	-	-	-	-	-	-	-	-	NA	280	280	∞
Styrene/Fug. Air	71	103	32	45	-	-	-	-	517	937	420	81
Tetrachloroethylene/Stack Air	-	-	-	-	-	-	-	-	NA	42	42	∞
Tetrachloroethylene/Fug. Air	38	134	96	253	-	-	-	-	-	-	-	-
Titanium Tetrachloride/Fug. air	2	0	-2	-100	-	-	-	-	-	-	-	-
Toluene/Stack Air	-	-	-	-	-	-	-	-	5,629	2,573	-3,055	-54
Toluene/Fug. Air	1,291	3,976	2,685	208	-	-	-	-	2,072	2,687	615	30
Vinyl Chloride/Stack Air	-	-	-	-	-	-	-	-	5,921	6,512	591	10
Vinyl Chloride/Fug. Air	3,304	11,742	8,438	255	4,206	7,250	3,044	72	2,858	3,051	193	7
Xylene/Stack air	-	-	-	-	3,902	3,937	35	1	8,140	6,934	-1,206	-15
Xylene/Fug. Air	4,167	11,801	7,634	183	-	-	-	-	1,399	1,466	67	5

EPA/FOIA2018-00292

SUMMARY OF FINDINGS

Based on inspection observations, discussions with Formosa personnel, and review of documentation, the following areas of noncompliance and areas of concern[1] associated with the CERCLA and EPCRA requirements, were identified.

AREAS OF NONCOMPLIANCE

1. [CERCLA § 103 [40 CFR § 302.6(a)] - *Any person in charge of a vessel or an offshore or an onshore facility shall, as soon as he has knowledge of any release... ...in a quantity equal to or exceeding the reportable quantity determined by this part in any 24-hour period, immediately notify the National Response Center.*] 7(B)

   [Formosa's notification to the NRC for 72 reportable releases was not made immediately following the release.] 7(B)

   [Formosa did not report 250 reportable releases of vinyl chloride to the NRC.]

2. [EPCRA § 304(b) [40 CFR § 355.40(b)(1)] - *The owner or operator of a facility subject to this section shall immediately notify the LEPC and SERC of the release of a reportable quantity of any extremely hazardous substance or CERCLA hazardous substance.*] 7(B)

   [Formosa did not immediately notify the LEPC and SERC of 70 reportable releases.] 7(B)

   [Formosa did not report 250 reportable releases of vinyl chloride to the LEPC and SERC.]

3. [EPCRA § 304(c) [40 CFR § 355.40(b)(3)] – *As soon as practicable after a release which requires notice under (b)(1) of this section, such owner or operator shall provide a written follow-up emergency notice setting forth and updating the information required under paragraph (b)(2) of this section....*] 7(B)

   [Formosa did not provide written follow-up notification for two reportable releases.] 7(B)

4. [EPCRA § 311 [40 CFR § 370.21(c)(2)] – *After October 17, 1987, the owner or operator of a facility subject to this section shall submit an MSDS for a hazardous chemical . . . or a list of hazardous chemicals . . .within three months after the owner or operator is first required to prepare or have available the MSDS or after a hazardous chemical requiring an MSDS becomes present in an amount exceeding the threshold established in § 370.20(b).*] 7(B)

   [MSDSs or an alternative reporting list for hazardous chemicals brought onsite that exceed the threshold in 40 CFR Section 370.20(b), are not submitted to the local fire department, SERC, and LEPC.] 7(B)

[1] *Areas of concern are inspection observations of potential problems/activities that could impact the environment, result in future noncompliance with permit or regulatory requirements, and/or are areas associated with pollution prevention issues.*

EPA/FOIA2018-00293

5. [EPCRA § 313 [40 CFR § 372.30(a)] - *For each toxic chemical known by the owner or operator to be manufactured (including imported), processed, or otherwise used in excess of an applicable threshold quantity... ...for a calendar year... ...the owner or operator must submit to EPA and to the State a completed EPA Form R in accordance with this part.*] 7(B)

[Anthracene was not reported in 2000 although the threshold was exceeded. Additionally, NEIC could not locate threshold calculations for anthracene for 2001 and 2002.] 7(B

[The following table outlines the data quality errors found in Formosa's toxic release reporting. Positive changes indicate that a release amount was underreported. Negative changes indicate that a release amount was overreported. Dashes within the table indicate that no areas of noncompliance were found.] 7(B)

AREAS OF CONCERN

A. [Formosa may have failed to report VCM releases above the reportable quantity for 2001 and 2002. NEIC believes the ambient data collected in 2003 to be representative of the 2000 through 2002 timeframe, despite events such as Hurricane Claudette in July 2003, because (1) no VCM release reports were submitted by the company for the hurricane period; (2) the number of leaks (greater than 1 ppm) recorded per month increased after the hurricane, but then decreased and increased to a new maximum (showing the hurricane was not the source of the increasing leak trend); and (3) general statements from VCM plant personnel about emergency capacity present in the VCM process to avert releases.] 7(B)

B. [Formosa's 2000 and 2001 background documentation does not contain threshold calculations for chloromethane. Based on production in the VCM plant in 2000 and 2001, it appears the amount of chloromethane manufactured in the VCM plant would have exceeded the 25,000 pound threshold and, therefore, Form Rs should have been submitted.] 7(B)

C. [Threshold determinations for persistent bioaccumulative toxic (PBT) chemicals such as mercury, lead, and polycyclic aromatic compounds (PACs) should be reviewed by Formosa. Based on the background information provided by Formosa, the PBT chemicals were not thoroughly evaluated at the reduced thresholds beginning in 2000. Glycol ethers and sulfuric acid thresholds should also be evaluated to confirm that these chemicals should not be reported since both of these chemicals are used at Formosa. Facilities similar to Formosa have reported for these chemicals.] 7(B)

D. [Formosa appears to have underreported fugitive emissions of vinyl chloride monomer from the VCM plant by roughly 9,000 lbs. annually from 2000 through 2002. Formosa most likely underreported fugitive emissions of vinyl chloride monomer from the PVC plant also because they have ambient air monitors present and are not including the information in their EPCRA vinyl chloride fugitive emissions calculations.] 7(B)

E. [Formosa reported more one-time chemical releases in Section 8.8 of the 2000 and 2001 Form Rs than NEIC typically sees reported on Form Rs. Formosa reported 19 chemicals in Section 8.8 for reporting year 2000 and 8 chemicals for reporting year 2001. Section 8.8 should only include the quantity of toxic chemical released to the environment as a] 7(B)

result of remedial actions, catastrophic events, or one-time events not associated with production processes. The toxic chemical releases reported in Section 8.8 for 2000, 2001, and 2002 should not have been included in Section 8.8 because the releases do not meet the definition of a one-time release and are typically production related releases. If the releases reported in Section 8.8 do meet the "one-time" release definition, these releases must also be included in Section 5 of the Form R, as required. Formosa should submit corrected Form Rs for reporting years 2000, 2001, and 2002. The toxic chemicals should be removed from Section 8.8 reporting (unless they meet the definition above) and accurately reported in Section 5 under the appropriate release category. 7(B)

EPA/FOIA2018-00295

DATA QUALITY ERRORS FOUND IN FORMOSA'S TOXIC RELEASE REPORTING

Chemical/Release Medium	2000 Amount Reported (lbs)	2000 NEIC Amount (lbs)	2000 Amount in Error (lbs)	2000 Percent Difference	2001 Amount Reported (lbs)	2001 NEIC Amount (lbs)	2001 Amount in Error (lbs)	2001 Percent Difference	2002 Amount Reported (lbs)	2002 NEIC Amount (lbs)	2002 Amount in Error (lbs)	2002 Percent Difference
1,1,2,2-Tetrachloroethane/Stack air	0	13	13	∞	-	-	-	-	-	-	-	-
1,1,2-Trichloroethane/Stack air	0	155	155	∞	-	-	-	-	NA	46	46	∞
1,3 Butadiene/Stack air	2,301	5,293	2,992	130	-	-	-	-	-	-	-	-
1,3-Butadiene/Fug. Air	-	-	-	-	575	2,075	1,500	261	2,154	1,445	-709	-33
1,2,4-Trimethylbenzene/Stack Air	-	-	-	-	-	-	-	-	3,314	3,551	237	7
1,2,4-Trimethylbenzene/Fug. Air	1,167	2,613	1,446	124	-	-	-	-	52	185	133	254
1,2-Dichloroethane (EDC)/Stack Air					1,710	2,473	763	45	4,157	14,737	10,580	254
1,2-Dichloroethane (EDC)/Fug. Air	8,314	9,405	1,091	13	3,404	4,102	698	21	14,635	17,019	2,384	16
Acetaldehyde/Fug. Air	-	-	-	-	-	-	-	-	2,099	4,220	2,121	101
Benzene/Stack Air	-	-	-	-	-	-	-	-	13,127	10,789	-2,338	-18
Benzene/Fug. Air	847	1,696	849	100	2,092	2,355	263	13	3,349	5,098	1,749	52
Chlorine/Fug. Air	653	658	5	0.77	-	-	-	-	-	-	-	-
Chlorobenzene/Stack air	-	-	-	-	-	-	-	-	NA	42	42	∞
Cyclohexane/Fug. Air	72	75	3	4	-	-	-	-	164	122	-42	-26
Dichlorodifluoromethane/Stack air	-	-	-	-	-	-	-	-	0	72	72	∞
Dichlorodifluoromethane/Fug. air	-	-	-	-	-	-	-	-	13,727	13,000	-727	-5
Dichloromethane (Methylene Chloride)/ Fug. air	-	-	-	-	-	-	-	-	221	5,049	4,828	2,185
Dicyclopentadiene/Stack Air	-	-	-	-	-	-	-	-	0.32	5	5	1,444
Dicyclopentadiene/Fug. Air	4	0	-4	-100	-	-	-	-	-	-	-	-
Ethylbenzene/Stack Air	-	-	-	-	-	-	-	-	2,481	2,059	-422	-17
Ethylbenzene/Fug. Air	1,569	4,760	3,191	203	-	-	-	-	-	-	-	-
Ethylene/ Fug. Air	10,973	55,439	44,466	405	13,853	114,645	100,792	728	23,644	23,924	280	1
Ethylene glycol/Stack Air	-	-	-	-	-	-	-	-	1,686	1,086	-600	-36
Ethylene glycol/Fug. Air	4,706	5,236	530	11	-	-	-	-	1,998	1,628	-370	-19
Ethylene oxide/Fug. Air	67	89	22	33	99	114	15	15	-	-	-	-
n-hexane/Stack Air	-	-	-	-	-	-	-	-	28,410	33,054	4,644	16
n-hexane/Fug. Air	3,179	22,284	19,105	601	4,256	5,070	814	19	5,222	8,403	3,181	61
Hydrochloric acid/Fug. Air	703	1,671	968	138	-	-	-	-	1,134	1,143	9	1
Naphthalene/Stack air	-	-	-	-	-	-	-	-	5,268	4,818	-450	-9
Naphthalene/Fug. air	-	-	-	-	-	-	-	-	320	1,160	840	263
Propylene/Stack Air	-	-	-	-	-	-	-	-	52,398	46,807	-5,591	-11
Propylene/Fug. Air	10,732	21,562	10,830	101	12,412	41,162	28,750	232	20,772	22,783	2,011	10
Propylene Oxide/Fug. Air	-	-	-	-	-	-	-	-	NA	280	280	∞
Styrene/Fug. Air	71	103	32	45	-	-	-	-	517	937	420	81

EPA/FOIA2018-00296

Chemical/Release Medium	2000 Amount Reported (lbs)	2000 NEIC Amount (lbs)	2000 Amount in Error (lbs)	2000 Percent Difference	2001 Amount Reported (lbs)	2001 NEIC Amount (lbs)	2001 Amount in Error (lbs)	2001 Percent Difference	2002 Amount Reported (lbs)	2002 NEIC Amount (lbs)	2002 Amount in Error (lbs)	2002 Percent Difference
Tetrachloroethylene/Stack Air	-	-	-	-	-	-	-	-	NA	42	42	∞
Tetrachloroethylene/Fug. Air	38	134	96	253	-	-	-	-	-	-	-	-
Titanium Tetrachloride/Fug. air	2	0	-2	-100	-	-	-	-	-	-	-	-
Toluene/Stack Air	-	-	-	-	-	-	-	-	5,629	2,573	-3,055	-54
Toluene/Fug. Air	1,291	3,976	2,685	208	-	-	-	-	2,072	2,687	615	30
Vinyl Chloride/Stack Air	-	-	-	-	-	-	-	-	5,921	6,512	591	10
Vinyl Chloride/Fug. Air	3,304	11,742	8,438	255	4,206	7,250	3,044	72	2,858	3,051	193	7
Xylene/Stack air	-	-	-	-	3,902	3,937	35	1	8,140	6,934	-1,206	-15
Xylene/Fug. Air	4,167	11,801	7,634	183	-	-	-	-	1,399	1,466	67	5

EPA/FOIA2018-00297

APPENDIX C

TRI Report Background Calculations

Total Pages = 12

2002 TRI Air Emissions

VCM Plant

Total TRI Emissions

Chemical	Point Source	Fugitive Emissions	Releases	Total (lbs.)
Chlorine	1,688.00			1,688.00
Benzene	7.00	4.00		11.00
Ethylene	61.00	86.00		147.00
VCM	54.30	356.00 ✓	2,727.00	3,137.30
Chlorprene	5.00	23.00		28.00
Chloroform	41.00	26.00		67.00
Chlorethane	1.80	0.00		1.80
Carbon Tetrachloride	7.00	6.00		13.00
EDC	2,310.00	3,501.00		5,811.00
HCl	1,322.70	102.00		1,424.70
1,1,2 Trichlorethane		23.00		23.00
Tetrachloroethylene		5.00		5.00
Chlorobenzene		1.00		1.00
1,1,2,2 Tetrachloroethane				0.00
1,1,1,2 Tetrachloroethane				0.00
Methyl Chloride	1.50			1.50
1,1 Dichloroethane		14.00		14.00
Trans 1,2 DCE		5.00		5.00
1,3 Butadiene	0.30			0.30
Ethylene Glycol		8.00		8.00
Methanol		131.00		131.00
Dichlorodifluromethane (CFC-12)		13,727.00		13,727.00
Hexachlorobenzene	1.00	2.00		3.00
Total (lbs.)	5,500.60	18,020.00	2,727.00	26,247.60

CERCLA&EPCRA-Appendix C EPA/FOIA2018-00346 VP0614

2002 TRI Air Emissions

VCM Plant

Fugitive Emissions

Chemical	Emission Point (EPN)	Quanitity Emitted (lbs)	Total (lbs.)
Benzene	Process Fugitive	4.00	4.00
Ethylene	Maint.		
	Fugitives	86.00	86.00
EDC	Maintenance	1560.00	
	Fugitives	1941.00	3501.00
VCM	Maint.		
	Fugitives	356.00	
	Cooling Tower		356.00
Chloroprene	Fugitives	23:00	23.00
Chloroform	Fugitives	26.00	26.00
Chloroethane	Fugitives	0.00	0.00
1,1 Dichloroethane	Fugitives	14.00	14.00
Carbon Tetrachloride	Fugitives	6.00	6.00
Difluorodichloromethane	Maint.		
	Fugitives	13727.00	13727.00
HCl			
HCl - anhydrous	Fugitives	102.00	102.00
1,1,2 Trichloroethane	Fugitives	23.00	23.00
Tetrachloroethylene	Fugitives	5.00	5.00
Chlorobenzene	Fugitives	1.00	1.00
Trans 1,2 DCE			
1,1,2,2 Tetrachloroethane			
1,1,1,2 Tetrachloroethane			
1,2 Dichloroethylene	Fugitives	5.00	5.00
1,3 Butadiene			
Ammonia			
Ethylene Glycol	Fugitives	8.00	8.00
Methanol	Fugitives	131.00	131.00
Chlorine			
Hexachlorobenzene		2.00	2.00

Total (lbs.)	18,020.00

2001 TRI Air Emissions

VCM Plant

Total TRI Emissions

Chemical	Point Source	Fugitive Emissions	Releases	Total (lbs.)
Chlorine	8,778.00			8,778
Benzene	17.00	1.00		18
Ethylene	233.00	76.00	11.00	320
VCM	0.00	1,493.00	1,689.00	3,182
Chlorprene	87.00	7.00		94
Chloroform	98.00	8.00		106
Chlorethane	5.00			5
Carbon Tetrachloride	20.00	2.00		22
EDC	876.00	2,674.00	689.00	4,239
HCl	1,980.00	81.00		2,061
1,1,2 Trichlorethane		32.00		32
Tetrachloroethylene		17.00		17
Chlorobenzene		2.00		2
1,1,2,2 Tetrachloroethane		1.00		1
1,1,1,2 Tetrachloroethane		1.00		1
1,2 Dichloroethylene	19.00			19
1,1 Dichloroethane		5.00		5
Trans 1,2 DCE		2.00		2
1,3 Butadiene	1.00			1
Dichlorodifluromethane (CFC-12)		19,936.00	2,762.00	22,698
Total (lbs.)	12,114.00	24,338.00	5,151.00	41,603

EHS - Air Section

Revised: 6/10/02

File Name: vcm 01 xlw

2001 TRI Air Emissions

VCM Plant

Fugitive Emissions

Chemical	Emission Point (EPN)	Quanitity Emitted (lbs)	Total (lbs.)
Benzene		1.00	1.00
Ethylene	Maint.		
	Fug.	76.00	76.00
VCM	Maint.	21.00	
	Fug.	807.00	
	Cooling Tower	665.00	1493.00
Chloroprene		7.00	7.00
Chloroform		8.00	8.00
Chloroethane			
1,1 Dichloroethane		5.00	5.00
Carbon Tetrachloride		2.00	2.00
Difluorodichloromethane	Maint.	19936.00	
	Fug.		19936.00
EDC	Maint.	492.00	
	Fug.	2109.00	
	Cooling Tower	73.00	2674.00
HCl		1.00	1.00
HCl - anydrous		80.00	80.00
1,1,2 Trichloroethane		32.00	32.00
Tetrachloroethylene		17.00	17.00
Chlorobenzene		2.00	2.00
Trans 1,2 DCE		2.00	2.00
1,1,2,2 Tetrachloroethane		1.00	1.00
1,1,1,2 Tetrachloroethane		1.00	1.00
1,2 Dichloroethylene			
1,3 Butadiene			
Ammonia			
Chlorine			

Total (lbs.)	24,338.00

2000 TRI Air Emissions

VCM Plant

Total TRI Emissions

Chemical	Point Source	Fugitive Emissions	Releases	Total (lbs.)
Chlorine	2,532.00			2,532
Benzene	19.20	2.04		21
Ethylene	222.00	431.06	127.93	781
VCM	0.00	914.57	673.12	1,588
Chlorprene	102.00	10.74		113
Chloroform	114.00	12.17		126
Chlorethane	4.50	0.41		5
Carbon Tetrachloride	24.00	2.66		27
EDC	876.00	1,988.73	765.65	3,630
HCl	4,958.00	176.54	961.84	6,096
1,1,2 Trichlorethane		67.56	154.73	222
Tetrachloroethylene		38.04	95.60	134
Chlorobenzene		4.92		5
1,1,2,2 Tetrachloroethane		3.49	13.45	17
1,1,1,2 Tetrachloroethane		3.49		3
1,2 Dichloroethylene	22.20			22
1,1 Dichloroethane		6.75		7
Trans 1,2 DCE		2.35		2
1,3 Butadiene	0.78			1
Total (lbs.)	8,874.68	3,665.52	2,792.32	15,333

EHS - Air Section

Revised: 06/20/01

File Name: vcm 00 xlw

2000 TRI Air Emissions

VCM Plant

Fugitive Emissions

Chemical	Emission Point (EPN)	Quanitity Emitted (lbs)	Total (lbs.)
Benzene		2.04	2.00
Ethylene	Maint.	283.00	
	Fug.	148.06	431.06
VCM	Maint.	40.11	
	Fug.	874.46	914.57
Chloroprene		10.74	10.74
Chloroform		12.17	12.17
Chloroethane		0.41	0.41
1,1 Dichloroethane		6.75	6.75
Carbon Tetrachloride		2.66	2.66
EDC		1988.73	1988.73
HCl		176.54	176.54
1,1,2 Trichloroethane		67.56	67.56
Tetrachloroethylene		38.04	38.04
Chlorobenzene		4.92	4.92
Trans 1,2 DCE		2.35	2.35
1,1,2,2 Tetrachloroethane		3.49	3.49
1,1,1,2 Tetrachloroethane		3.49	3.49
1,2 Dichloroethylene			
1,3 Butadiene			
Ammonia			
Chlorine			

Total (lbs.)	3,665.48

2002 TRI Air Emissions

PVC Plant

Total TRI Emissions

Chemical	Point Source	Fugitive Emissions	Releases	Total (lbs.)
Methanol	1,920.00	0.00		1,920.00
VCM	3,140.00	2,502.00	0.00	5,642.00
Ammonia		0.00		0.00
Ethylene		17.00		17.00
Ethylene Glycol		0.00		0.00
Methylene Chloride		221.00		
HCL			0.00	0.00
bis-Phenol		0.00		0.00
Total (lbs.)	5,060.00	2,740.00	0.00	7,800.00

2002 TRI Air Emissions

PVC Plant

Fugitive Emissions

Chemical	Emission Point (EPN)	Quanitity Emitted (lbs)	Total (lbs.)
Methanol	Fugitive Emissions		0.00
VCM	Maintenance Emissions		
	ROL		
	Fugitive Emissions	1902.00 ✓	
	Equipment Openings	600.00	2502.00
Ammonia	Fugitive Emissions		0.00
Ethylene	Fugitive Emissions	17.00	17.00
Ethylene Glycol	Fugitive Emissions		0.00
Methylene Chloride	Fugitive Emissions	221.00	221.00
bis-Phenol	Fugitive Emissions		0.00

Total (lbs.)	2740.00

2001
~~2000~~ TRI Air Emissions

PVC Plant

Total TRI Emissions

Chemical	Point Source	Fugitive Emissions	Releases	Total (lbs.)
Methanol	1,760.00	130.00		1,890
VCM	4,220.00	2,713.00	1,355.00	8,288
Ammonia				0
Ethylene		17.00		17
Ethylene Glycol		3.00		3
HCL				0
bis-Phenol				0
Total (lbs.)	5,980.00	2,863.00	1,355.00	10,198

2001
~~2000~~ TRI Air Emissions

PVC Plant

Fugitive Emissions

Chemical	Emission Point (EPN)	Quanitity Emitted (lbs)	Total (lbs.)
Methanol	Fugitive Emissions	130.00	130.00
VCM	Maintenance Emissions	17.00	
	ROL	678.00	
	Fugitive Emissions	2017.00	
	Equipment Openings	1.00	2713.00
Ammonia	Fugitive Emissions		0.00
Ethylene		17.00	17.00
Ethylene Glycol	Fugitive Emissions	3.00	3.00
bis-Phenol	Fugitive Emissions		0.00

Total (lbs.)	2863.00

2000 TRI Air Emissions

PVC Plant

Total TRI Emissions

Chemical	Point Source	Fugitive Emissions	Releases	Total (lbs.)
Methanol	34,340.00	119.00		34,459
VCM	4,300.00	2,389.89	7,764.75	14,455
Ammonia		0.00		0
Ethylene		17.00		
Ethylene Glycol		1.00		1
HCL			1.14	1
bis-Phenol		31.00		31
Total (lbs.)	38,640.00	2,557.89	7,765.89	48,964

2000 TRI Air Emissions

PVC Plant

Fugitive Emissions

Chemical	Emission Point (EPN)	Quanitity Emitted (lbs)	Total (lbs.)
Methanol	Fugitive Emissions	119.00	119.00
VCM	Maintenance Emissions	0.39	
	ROL	472.00	
	Fugitive Emissions	1879.00	
	Equipment Openings	38.50	2389.89
Ammonia	Fugitive Emissions	0.00	0.00
Ethylene		17.00	17.00
Ethylene Glycol	Fugitive Emissions	1.00	1.00
bis-Phenol	Fugitive Emissions	31.00	31.00

Total (lbs.)	2557.89

EPA/FOIA2018-00357

APPENDIX B

LETTERS REGARDING DISTILLATION BOTTOM REGULATORY STATUS

Total Pages 11

FR-9

UNITED STATES ENVIRONMENTAL PROTECTION AGENCY
REGION 6
1445 ROSS AVENUE, SUITE 1200
DALLAS, TX 75202-2733

MAR 26 2001

Jay Sn.
TO: Steve Marawitz.

Mr. Robert E. "Robin" Morse, III
Attorneys for Formosa Plastics Corporation, Texas
Crain, Caton & James
33rd Floor, Two Houston Center
909 Fannin
Houston, TX 77010-1079

Good News
TC
Clay
3/28/01.

RE: PPG Industries' Use of Formosa Plastics (Point Comfort) Heavy Ends

Dear Mr. Morse:

The Environmental Protection Agency (EPA) has elected to defer to the Texas Natural Resource Conservation Commission and the Louisiana Department of Environmental Quality on the issue of whether the heavy ends material going from Formosa, Point Comfort, Texas to PPG, Lake Charles, Louisiana should be manifested. Accordingly, EPA will not object to Formosa Point Comfort's plan to discontinue RCRA manifesting its heavy ends material to PPG, Lake Charles.

Should you have any questions on this matter, please contact Ms. Terry Sykes of our Office of Regional Counsel at (214) 665-2158.

Sincerely yours,

Mark W. Potts
Chief, Hazardous Waste Enforcement Branch

cc: J. Dale Givens
Louisiana Department of Environmental Quality

Leigh Ing
Texas Natural Resource Conservation Commission

EPA/FOIA2018-00517

Recycled/Recyclable • Printed with Vegetable Oil Based Inks on 100% Recycled Paper (40% Postconsumer)

Robert J. Huston, *Chairman*
R. B. "Ralph" Marquez, *Commissioner*
John M. Baker, *Commissioner*
Jeffrey A. Saitas, *Executive Director*

RECEIVED
SEP 18 2000
GENERAL MANAGERS OFFICE

TEXAS NATURAL RESOURCE CONSERVATION COMMISSION

Protecting Texas by Reducing and Preventing Pollution

September 14, 2000

6&7(C)

R. P. Smith
Formosa Plastic Corporation, Texas
P.O. Box 700
Point Comfort, TX 77978

Re: Exemption for Certain Distillation Bottoms from the Definition of a Solid Waste

Dear Mr. Smith:

This is in response to your August 11, 2000 letter regarding the reuse of distillation bottoms generated during the production of vinyl chloride monomer and ethylene dichloride. In your letter, you notified Texas Natural Resource Conservation Commission (TNRCC) of Formosa Plastic Corporation's intentions to reuse the distillation bottoms as a "feedstock material". You now seek concurrence that the material is exempt from being a solid waste in accordance with 40 Code of Federal Regulations (CFR) 261.2(e)(i) and 30 Texas Administrative Code (TAC) §335.1(119(F)(i),(ii)). The distillation bottoms will continue to be sent to PPG Industries in Lake Charles, Louisiana to be used in the manufacture of perchloroethylene and trichloroethylene (PER/TRI).

I would like to remind your facility that exclusions from solid waste regulation are intended to be self-implementing. The solid waste determination (much like the hazardous waste determination) and the burden of demonstration that a material is not a solid waste or is conditionally exempt lies, by rule, with the generator.

From the information and descriptions presented in your letter, I concur that the described activity appears to meet this exclusion. However, pursuant to the definition of a solid waste found in 30 TAC §335.1(123), your company is responsible for ensuring that the following conditions are met:

- There is a known market or disposition for the material;
- The material is handled as a product and not a waste;
- The material is the primary ingredient in the manufacturing process;
- The material contains no other toxic or hazardous materials that serve no legitimate purpose in this production process;
- The material is not burned for energy recovery or land applied;
- The material is not incorporated into or become a component of a fuel;
- The material is not speculatively accumulated; and

EPA/FOIA2018-00518

b7(c)

Re: Exemption for Certain Distillation Bottoms from the Definition of a Solid Waste

- The material is managed in such a way that does not create a nuisance, endanger the public health, or threaten the environment of the State of Texas.

I appreciate your interest in pursuing recycling alternatives. If you have any questions regarding the Industrial and Hazardous Waste Program's recycling rules, please do not hesitate to contact a member of the Technical Analysis Team at (512) 239-6412. If you have any questions regarding permitting requirements, please contact the Permits Section of the Waste Permits Division at (512) 239-6595. If you have any questions regarding this matter, please contact Ms. Marites "Tess" S. Johnston of my staff at (512) 239-6412.

Sincerely,

M. Scott Green

Scott Green, Team Leader
Technical Analysis Team
I & H Waste Permits Section
Waste Permits Division
Texas Natural Resource Conservation Commission

SG/MSJ/fp

cc: Ms. Marites Johnson, Technical Analysis Team, I&HW Permits Section
Dr. James Brent, Louisiana Department of Environmental Quality, Office of Environmental Assessment

EPA/FOIA2018-00519

ISO-9002 CERTIFIED
ISO-14001 CERTIFIED

P. O. BOX 700
201 FORMOSA DRIVE
POINT COMFORT, TEXAS 77978

PHONE: 361/987-7000
FAX: 361/987-2363

August 11, 2000

Certified Mail:
7000 0600 0025 0379 9446

Mr. Wade Wheatley
Texas Natural Resource Conservation Commission
Industrial & Hazardous Waste Permits M/C 130
P.O. Box 13087
Austin, TX 78711-3087

RE: Formosa Plastics Corporation, Texas
EPA ID No. TXT490011293
TNRCC Solid Waste Reg. No. 31945
PPG Industries RCRA Exempt Determination

Dear Mr. Wheatley,

Formosa Plastics Corporation, Texas (FPC-TX) is submitting the following letter to request concurrence from the Texas Natural Resource Conservation Commission (TNRCC) concerning the classification of certain distillation bottoms as not being hazardous wastes when used by PPG Industries PER/TRI process located in Lake Charles, Louisiana. This letter is also intended to meet the notification requirements in 30 TAC Part 335.6.

PPG made an initial presentation to EPA Region 6 and Louisiana Department of Environmental Quality (LA-DEQ) on August 25, 1999. Terry Sykes, Arnold Bierschenk and Steve Gilrein represented EPA Region 6. In attendance from the LA-DEQ were Dale Givens, Michael Beck, Shan Schatzle, Jim Brent, Michael Vince, Scott Wilkinson and Malcolm Piper. PPG also met with EPA Washington representatives on March 1, 2000 to review this matter with them. In attendance at the EPA Headquarters meeting were Marilyn Goode, Kristina Meson and Charlotte Mooney. EPA has indicated that RCRA delegated States have jurisdiction over the determination.

Prior to the presentation held on July 7, 2000, the LA-DEQ provided verbal confirmation to Jim Rock, Mike Huger and Maureen Harbourt of PPG that the distillation bottoms are not regulated as hazardous wastes under RCRA when used/reused as ingredients in this PPG process. Both the TNRCC and LA-DEQ attended the July 7, 2000 presentation by PPG personnel concerning this issue (a copy of the agenda is attached). In attendance from the TNRCC were Parker Wilson, Dale Burnett, Leigh Ing and Wade Wheatley.

FPC-TX is requesting formal written concurrence from the TNRCC that the distillation bottoms, when used as a feedstock to the PPG process, are also exempt from RCRA. These distillation bottoms are also referred to as heavy ends/ light ends or distillation ends. However, in this letter they will be referred to as distillation bottoms. Currently FPC-TX provides distillation bottoms to PPG for use in their PER/TRI process. The majority of perchloroethylene and trichloroethylene (see attached MSDS) produced by PPG is sold to producers of the ozone friendly refrigerant CFC 134A, which is widely used in automotive and other air conditioning systems. The FPC-TX distillation bottoms (see attached MSDS) are generated during the production of vinyl chloride monomer (VCM) and ethylene dichloride (EDC). EDC is produced in both the Vinyl Chloride Monomer (VCM) and EDC Plants at FPC-TX. Once generated, the distillation bottoms are currently managed on site in five storage tanks. These tanks are currently managed as less than 90-day RCRA storage tanks. Two of these tanks (VT-763 C/D) are located in the VCM plant and the other three (DT-405, DT-407 A/B) are located in the EDC plant. The distillation bottoms are transferred from these tanks to a tank truck that then transports the distillation bottoms to PPG. The distillation bottoms are shipped to PPG on a Louisiana Uniform Hazardous Waste Manifest.

Once written concurrence is received from the TNRCC the distillation bottoms at FPC-TX will be treated as a raw material and handled in the manner described below. Additionally, a letter of concurrence from the LA-DEQ will also have to be received prior to any change in manifesting or the change in the handling of distillation bottoms routed to PPG for recycling. Tanks VT-763 C/D, DT-405 and DT-407 A/B will be closed according to 30 TAC Part 350 (Texas Risk Reduction Program) and no longer considered waste management units. Once generated, the distillation bottoms will continue to be stored in tanks VT-763 C/D, DT-405 and DT-407 A/B. These tanks will then be managed as raw material storage tanks. According to FPC-TX policy these tanks would then be visually inspected on a weekly basis. Further, these tanks will be subject to federal and state spill containment and control requirements.

Transfer procedures for the distillation bottoms will remain the same, however the shipping papers will be changed. Each tank truck of distillation bottoms will be shipped on a Bill of Lading with an accompanying MSDS of the distillation bottoms.

We understand that the classification of these distillation bottoms is dependent upon their use as ingredients in PPG's process and that if they are not used in this manner, they will be classified as hazardous wastes unless some other exemption applies. In the event that PPG would not be able to accept the distillation bottoms, due to turn-arounds or process problems, FPC-TX will have an alternate plan in place for their removal to an approved recycle facility, Catoxid process or shipped to a RCRA Permitted disposal facility.

EPA/FOIA2018-0052

We respectfully request your assistance in this matter as it does affect the largest waste stream generated at FPC-TX, representing approximately 9,000 tons of waste material per year.

Should you have any further questions please contact [Matt Brogger at (361) 987-7468.] b(7)(C)

Sincerely,

R. P. Smith
Vice President/General Manager
Formosa Plastics Corporation, TX

cc:	Mr. Carlton Stanley c/o Mr. Russell Lewis TNRCC Region 14 6300 Ocean Drive, Suite 1200 Corpus Christi, TX 78412	Certified Mail: 7000 0600 0025 0379 9439
cc:	Mr. Jeff Voorhis Pollution Prevention, M/C 112 TNRCC P.O. Box 13087 Austin, TX 78711-3087	Certified Mail: 7000 0600 0025 0379 9415
cc:	Mr. Scott Green Waste Analysis Team, M/C 129 TNRCC P.O. Box 13087 Austin, TX 78711-3087	Certified Mail: 7000 0600 0025 0379 9422
cc:	Mr. Bill Shafford TNRCC Industrial & Hazardous Waste Permits M/C 130 P.O. Box 13087 Austin, TX 78711-3087	Certified Mail: 7000 0600 0025 0379 9071

EPA/FOIA2018-00523

State of Louisiana

Department of Environmental Quality

M.J. "MIKE" FOSTER, JR.
GOVERNOR

J. DALE GIVENS
SECRETARY

E,H&S
Received
11/17/2000

CERTIFIED MAIL 7099 3400 0007 7056 2838 - RETURN RECEIPT REQUESTED

Charlotte R. Mooney, Chief (5304W)
U.S. Environmental Protection Agency, Headquarters
Ariel Rios Building
1200 Pennsylvania Avenue, NW
Washington, DC 20460

Re: PPG Industries, Inc. - Lake Charles, Louisiana
Agency Interest Number: 1255
EPA Identification Number: LAD008086506
Request for Classification of Byproduct Material

Dear Ms. Mooney:

On April 5, 2000, the Louisiana Department of Environmental Quality (LDEQ) received a formal request from PPG Industries, Inc. for a determination that certain byproduct material that it uses at its Lake Charles facility as a feedstock to make other products is excluded under the RCRA definition of solid waste. This request followed a series of prior meetings with both the LDEQ and the USEPA. Initially, PPG approached the Department about this matter in August 1999. At that time, it was decided that this matter should be addressed with USEPA, Region 6 because the byproduct material in question is generated in both Texas and Louisiana. We arranged a meeting with representatives of both USEPA Region 6 and my staff with PPG at their facility in Lake Charles on August 25, 1999. PPG made a presentation concerning its process and took the agency representatives on a tour to show them the equipment at issue. PPG also made a request for a determination to EPA at that time.

It is our understanding that Region 6 referred PPG to your office for review of this matter and that a meeting was held between your staff and PPG representatives on March 1, 2000. It is also our understanding that at the meeting you indicated that PPG should seek a determination from the LDEQ, as it has delegation of the RCRA program in Louisiana, but you offered your assistance as a consultant to the State and/or Region 6 should such assistance be needed. Pursuant to such advice, PPG filed the request with my staff on April 5, 2000, as indicated above. PPG indicated to us that they informed your office and Region 6 that PPG was making the request to our office.

Since that time, LDEQ staff have reviewed the submission and concurs with PPG's determination, because use of the material constitutes use/reuse of the byproduct as an ingredient in an industrial process to make a product, without distinct components of the material being reclaimed.

Prior to making a final determination, we requested a meeting with the Texas Natural Resources Conservation Commission (TNRCC) in order to review the request with them. This meeting was held on July 7, 2000 with Ms. Leigh Ing of TNRCC and her staff, as well as representatives of PPG. Our discussions with the TNRCC indicate that they concur with our determination that PPG's request should be granted. PPG's processing of this material constitutes resource conservation and recovery and is the type of activity that we would like to encourage.

A copy of the approval letter for PPG's request is attached. If you have any questions or comments concerning this matter, please contact Dr. James H. Brent at (225) 765-0232, or Mr. Shan Schatzle at (225) 756-2789.

Sincerely,

J. Dale Givens
Secretary

Attachment

State of Louisiana

Department of Environmental Quality

M.J. "MIKE" FOSTER, JR.
GOVERNOR

J. DALE GIVENS
SECRETARY

E,H&S
Received
11/17/2000

CERTIFIED MAIL 7099 3400 0007 7056 2845 - RETURN RECEIPT REQUESTED

Mr. Robert Eakin
Works Manager
PPG Industries, Inc.
Post Office Box 1000
Lake Charles, LA 70602-1000

Re: PPG Industries, Inc.
Agency Interest Number: 1255
EPA Identification Number: LAD008086506
Request for Classification of Byproduct Material

Dear Mr. Eakin:

The Louisiana Department of Environmental Quality (LDEQ) is in receipt of PPG Industries, Inc.'s request, dated April 5, 2000 (submitted by the law firm Kean, Miller, Hawthorne, D'Armond, McCowan & Jarman, L.L.P. on PPG's behalf), requesting a determination on whether certain byproducts used as a feedstock for PPG's Perchloroethylene/Trichloroethylene (Per/Tri) production process are exempt under the definition of solid waste.

The LDEQ has carefully reviewed your request, the regulations, applicable EPA guidance documents, and previous regulatory interpretations and concurs with your interpretation that the byproducts in question are not solid wastes when used in PPG's Per/Tri production process, as described in your submission. Thus, the requirements for management of solid wastes/hazardous wastes under LAC title 33, Part V, including manifesting and tank standards, are not required provided the Bottoms are used as described in PPG's submission. Nothing in this determination shall relieve PPG from compliance with applicable Spill Prevention Control and applicable air emission control requirements for tanks used to manage these Bottoms. Further, nothing in this determination shall affect the duty of off-site producers to comply with all applicable DOT shipping and labeling requirements; nor does it waive any additional regulatory requirements imposed upon off-site generators outside of Louisiana.

LDEQ supports PPG's use of these Bottoms as a feedstock to its Per/Tri process, as the type of resource conservation that the federal and state rules seek to encourage. If you have any questions or comments regarding this matter, please contact Mr. Shan Schatzle at (225) 765-2789.

Sincerely,

J. Dale Givens
Secretary

c: Leigh Ing, TNRCC, Office of Permitting, Remediation, & Registration
Charlotte Mooney, USEPA HQ, Office of Solid Waste and Emergency Response
Patricia Haynes, Georgia Gulf Corporation
[Kelly Serio,] Formosa Plastics Corporation

6§7(c)

TOTAL P.05

APPENDIX C

TNRCC BIO-SLUDGE DELISTING LETTER

Total Pages 2

Barry R. McBee, *Chairman*
R. B. 'Ralph' Marques, *Commissioner*
John M. Baker, *Commissioner*
Dan Pearson, *Executive Director*

TEXAS NATURAL RESOURCE CONSERVATION COMMISSION

Protecting Texas by Reducing and Preventing Pollution

April 5, 1996

b&7(c)

Mr. W. Ken Mounger
Vice President/General Manager
Formosa Plastics Corp.
P.O. Box 700
Point Comfort, Texas 77978

Re: Formosa Plastics Chemical Mfg. Plant - Point Comfort, TX.
TNRCC Solid Waste Registration No. 31945 / EPA ID No. TXT490011293
Reclassification of Waste Water Treatment System Sludge as Nonhazardous Waste
and Treatment and Disposal of Contaminated Groundwater

Dear Mr. Mounger:

b&7(c)

The Texas Natural Resource Conservation Commission (TNRCC) has reviewed your report entitled *Biological Waste Water Treatment Mass Balance Case Study* dated November 15, 1995. In the mass balance study Formosa addresses two issues: (1) Has Formosa adequately demonstrated that the sludge from its waste water treatment system (WWTS) is no longer listed hazardous waste and (2) Can Formosa pretreat contaminated groundwater (considered listed hazardous waste because of the "contained-in policy") so that it is no longer hazardous waste and then dispose of the treated groundwater to its WWTS?

Reclassification of WWTS Sludges From Hazardous to Nonhazardous

A spill of ethylene dichloride (EDC) on October 13, 1993 at the Formosa Plastics Point Comfort plant resulted in contaminated wastewater containing > 5μg/l EDC being processed through Formosa's waste water treatment system . Although apparently not documented, the TNRCC Region 14 Office and EPA Region 6 made a determination that Formosa had treated listed hazardous waste (U077) in its WWTS and that, therefore, the sludge generated in the WWTS had become listed hazardous waste. Formosa has been disposing of its WWTS sludge as hazardous waste since the spill. According to the calculations presented in the mass balance study, the wastewater and sludge generated since the October 13, 1993 EDC spill have been removed a minimum of eight (8) times. Formosa contends that all of the EDC contaminated wastewater and sludge generated by the spill have now been removed. Also, Formosa's analyses of the sludge shows that it could qualify for a TNRCC Class I and II nonhazardous waste classification. To the extent that the above-noted information is correct and no other factors apply, the TNRCC concurs with the opinion that the sludge no longer is a hazardous waste. However, we caution Formosa that treating contaminated groundwater which is a listed hazardous waste in its WWTS may (as discussed below) render the sludge a listed hazardous waste.

FPC-06-00418

P.O. Box 13087 • Austin, Texas 78711-3087 • 512/239-1000

EPA/FOIA2018-00529

6§7(c)

Pretreatment and Disposal of Contaminated Groundwater to the WWTS

It is our understanding that Formosa is currently sending recovered groundwater, which is contaminated with U077, K019 and K020 listed hazardous waste, to its WWTS. The TNRCC offers the following opinion as to how the "contained-in policy" applies:

The contained-in policy, as developed by the EPA, specifies that mixtures of environmental media (i.e., groundwater or soil) and listed hazardous waste must be managed as if they were hazardous waste until the media no longer contain the listed hazardous waste. To date, EPA has not issued definitive guidelines as to when or at what levels, environmental media contaminated with hazardous waste no longer contains hazardous waste. Until such guidelines are issued, EPA has stated that authorized States (Texas) may determine these levels on a case-by-case basis.

It is the opinion of the TNRCC that for the contaminated groundwater no longer to be considered a listed hazardous waste, Formosa must pretreat the contaminated groundwater (prior to entering its WWTS) so that the hazardous waste constituents meet the risk based levels in TNRCC Risk Reduction Rules (RRR) Standards 1 or 2 (30 TAC Chapter 335 Subchapters A and S) and also meet the Universal Treatment Standards (40 CFR Part 268). The hazardous waste constituents for listed wastes are in 40 CFR Part 261 Appendix VII. Laboratory analyses of the treated groundwater must be performed using EPA approved analytical methods such as SW-846 methods 8260 and 8270.

Please be aware that if the recovered groundwater which is being sent to the WWTS does not meet RRR Standards 1 or 2 and the Universal Treatment Standards, then the sludge generated in the WWTS will continue to be a listed hazardous waste. If you have any questions about this matter, please contact Mr. Richard Clarke of the Closure Team in Austin at 512/239-2368, Mail Code MC-127.

Sincerely,

Richard Clarke

Richard Clarke, Program Director
Closure Team, Corrective Action Section
Industrial and Hazardous Waste Division

LEC:lcc

cc: Vincent Malott (6H-CX), U.S. EPA Region 6, 1445 Ross Ave.,
First Interstate Bank, Dallas, TX 75202-2733
Russell Lewis, TNRCC Region 14, Corpus Christi
Ata ur Rahman, Groundwater Team, Permits Section
Bill Crolley, Facility Team III, Permits Section
Susan Johnson, I&HW Team I, Enforcement Division
Doug Crist, I&HW Team I, Enforcement Division

FPC-06-00419

APPENDIX F

APRIL 2004 STRIPPER EFFLUENT DATA

Total pages 3

DEPARTMENT	VCM	REVISION : 5 REVISION DATE: 03/18/04	LOG DATE:
LOG SHEET NAME	O.C. & 600 AREA LOG	EFFECTIVE : 10/26/99	4-4-04
PAGE 1 OF 1	APPROVED BY: VCM PROD MGR	FILE: TVC 2001	SHIFT: D (N)

Board Operator: L. Vickery
Field Operator: L. Collis
Extra Operators: J. Schultz

647(C)

	ITEM	SPEC	1	2	3
VC-201A	HCl	< 1.8	1.7	1.8	1.8
	Cu++	< 100 ppm	10	10	6
VC-201B	HCl	< 1.8	2.6	2.1	1.5
	Cu++	< 100 ppm	10	10	10
VC-201C	HCl	< 1.8	2.0	1.7	1.4
	Cu++	< 100 ppm	12	14	8
VC-201D	HCl	< 1	1.0	0.5	0.5
	Cu++	< 100 ppm	4	6	2
VC-202A	NaOH	< 1%	0.2	0	
	Na2C03	< 18%	15.2	14.5	
	NaHC03	< 0.5%	0	0.3	
VC-202B	NaOH	< 1%	2.7	2.4	
	Na2C03	< 18%	13.0	15.1	
	NaHC03	< 0.5%	0	0	
VC-202C	NaOH	< 1%	0	0	
	Na2C03	< 18%	12.6	11.7	
	NaHC03	< 0.5%	0.3	0.4	
VV-201A	pH	10	9.3		
	Cl	< 1	0	19:00 ONLY	
	Po4	30	2.5		
VV-201B	pH	10	9.4		
	Cl	< 1	0.1	19:00 ONLY	
	Po4	30	3.2		
VV-201C	pH	10	9.6		
	Cl	< 1	0.1	19:00 ONLY	
	Po4	30	7.6		
VV-201D	pH	10	9.8		
	Cl	< 1	0.2	19:00 ONLY	
	PO4	30	7.3		
VT-B01A/B	pH	9	8.7	19:00 ONLY	
VV-B02A/B	pH	9	9.0		
	Cl	< 1	0.1	19:00 ONLY	
VC-630A	EDC	< 0.5 ppm	0	15	E
VC-630B	EDC	< 0.4 ppm			E
	Cu++	10			
VT-680	EDC	< 0.4 ppm	0	0	0
	Cu++	< 4	0.1	0.1	0.2
	CHCl3	1	1.1	0.8	1.2
VC-630C	EDC	< 0.4 ppm	0	0	0
	Cu++	< 4	0.1	0.1	0.1
VT-762	NaOH	18 ~22%			
VV-205	Na	< 50			Th
	EDC	> 97			Th
VT-203 H2O	pH	8 - 10	8.4		
VT-203 EDC	CO2	< 200 ppm			NA
	pH	5 - 10			NA
VT-204 H2O	%NaOH	1 - 2%	0		
	Na2CO3	0	2.1		
VT-204 EDC	GC	98.90%	99.23		
	pH	5 - 10	7.2		
VC-201D @ VT-611C	pH				
	%NaOH				
	% HCl				
VR-201D	PSD				
	METALS	Fe/Cu#			
	CONE	< 0.5 ml/liter			
	CBD				

	Capacity Beg	Capacity End	Max. Temp. Temp	Max. Temp. Tray #	Ratio C2H4	Ratio O2	HCl Conv	C2H4 Comb	PDR 223
OC-A	79	76	497	8	1.017	.552	99.76	1.36	23
OC-B	88	76	474	1	1.018	.553	99.83	1.03	29
OC-C	91	67	457	1	1.032	.550	99.88	1.00	29
OC-D	97	83	463	T-4	.36	.23	99.8	96.98	

Catalyst Inv.	Bed Level	Bed Density	Bed Velocity
106246	32.3	23.1	1.490

DP Lower	DP Total
75.7	107.3

	SPEC. %	START LEVEL %	ENDING LEVEL %	
VT-680	10 ~ 85	15	35	E
VT-710	10 ~ 85	50	50	E
VT-760	0 ~ 85	73	67	E
VT-762A	10 ~ 85	68	55	E
VT-762B	10 ~ 85	63	50	E
VT-630C	10 ~ 100	93	95	E

VR-280A In / Out of service
VR-280D In / Out of service
VT-B01 DI water On / Off
VT-680 to (VT-760, TT-T01B)
VP-632 to (VC-630, VT-760)
VC-630 A BTM Temp. 199 Bottoms to (TT-T01A/B, Circ)
VC-630 C BTM Temp. 215 Bottoms to (VT-680, VT-760)

VT-202	A	B	E	F		
ON LINE	✓		✓			
OFF LINE						

VE-632	A	B	C	D	E	F
ON LINE	✓	✓			1-3	
OFF LINE						1-3

Time	Event
[illegible]	VC-201 B HCL High Inc 5 scfm O2 + Put PI225B
↓	Will Monitor Results
19:50	VC-201C HCL High Inc 5 scfm O2 @ VR-201C will
↓	Monitor Results
21:30	VC-202B NaOH high Cut FC-241B will Monitor
↓	VT-204 NaOH low Inc FC-203b
Note	Readjusting O2 Rates Per P-425 will Monitor
23:15	Cutting Rates per P-425 will Monitor
00:00	By-Passed VR-28[illegible] A/D due to VC-501 B S/D
↓	Notified OLEFINS [Chipper Dowell]
0100	VC-630 A EDC High Put on Circulation Notified WW
0230	S/u NaOH to VT-762 FQ-710 - 20692961
↓	" " FQ-711 - 11181100
0245	All Clear Weather phase (0122 phase I Alert)
0400	VC630 A EDC 13.6 ppm BTI All Wells Except
0415	RS-6 will Continue to Monitor Volume &
↓	get Resample
0420	Inc VR-201 A/B Per P-425
0450	Put C244 @ VR-201 A/B due to Vinyl will Monitor
0500	A-216 A3 High Put on MANUAL
Note	NaOH Transfer in Progress

647(C)

Shift Supervisor: _____

EPA/FOIA2018-00575

DEPARTMENT	VCM	REVISION : 5 REVISION DATE: 03/18/04	LOG DATE: 4-5-04
LOG SHEET NAME	O.C. & 600 AREA LOG	EFFECTIVE : 10/26/99	SHIFT: D / N
PAGE 1 OF 2	APPROVED BY: VCM PROD MGR	FILE: FTVC 2001	

Board Operator: D. Fikes
Field Operator: B. Jordan / B. Pilgrim
Extra Operator: T. Riffle

6 & 7 (C)

	ITEM	SPEC	1	2	3	
VC-201A	HCl	< 1.8	1.1	1	1	
	Cu++	< 100 ppm	5	6	8	
VC-201B	HCl	< 1.8	1	.9	1.1	
	Cu++	< 100 ppm	10	12	12	
VC-201C	HCl	< 1.8	1	.3	.2	
	Cu++	< 100 ppm	10	6	2	
VC-201D	HCl	< 1	.2	.5	.6	
	Cu++	< 100 ppm	5	2	2	
VC-202A	NaOH	< 1%	0	.5		
	Na2C03	< 16%	14.6	14		
	NaHC03	< 0.5%	.6	0		
VC-202B	NaOH	< 1%	1.7	1.7		
	Na2C03	< 16%	13.7	13.6		
	NaHC03	< 0.5%	0	0		
VC-202C	NaOH	< 1%	0	/		
	Na2C03	< 16%	11.7	/		
	NaHC03	< 0.5%	.1	/		
VV-201A	pH	10				
	Cl	< 1				
	Po4	30				
VV-201B	pH	10				
	Cl	< 1				
	Po4	30				
VV-201C	pH	10				
	Cl	< 1				
	Po4	30				
VV-201D	pH	10				
	Cl	< 1				
	PO4	30				
VT-B01A/B	pH	9				
VV-B02A/B	pH	9				
	Cl	< 1				
VC-630A	EDC	< 0.5 ppm	110	103		E
VC-630B	EDC	< 0.4 ppm				E
	Cu++	10				
VT-680	EDC	< 0.4 ppm	0	0	.8	
	Cu++	< 4	.3	.1	1.1	
	CHCl3	1	.5	0	.7	
VC-630C	EDC	< 0.4 ppm	0	0	0	E
	Cu++	< 4	.2	.1	.2	
VT-762	NaOH	18 -22%	20.5			
VV-205	Na	< 50			Th	
	EDC	> 97			Th	
VT-203 H2O	pH	8 - 10	8.6			
VT-203 EDC	CO2	< 200 ppm				
	pH	5 - 10	6			
VT-204 H2O	%NaOH	1 - 2%	0			
	Na2CO3	0	2.7			
VT-204 EDC	GC	98.90%	98.85			
	pH	5 - 10	7.1			
VC-201D @ VT-811C	pH					
	%NaOH					
	% HCl					
VR-201D	PSD					
	METALS	Fe/Cu#				
	CONE	< 0.5 ml/liter				
	CBD					

	Capacity		Max. Temp.		Ratio		HCl	C2H4	PDR
	Beg	End	Temp	Tray #	C2H4	O2	Conv	Comb	223
OC -A	76	85	488	~~488~~	1.01	.55	99.87	1.11	22
OC -B	76	85	486	1	.999	.551	99.87	.96	26
OC -C	67	S/D	—						
OC-D	83	98	465	T-4	.378	.237	99.78	97.01	
	Catalyst Inv.		Bed Level		Bed Density		Bed Velocity		
	165384		33		23		1.588		
	DP Lower		DP Total			SPEC. %	START LEVEL %	ENDING LEVEL %	
	73		106						
					VT-680	10 - 85	35	51	E
					VT-710	10 - 85	50	50	E
					VT-760	0 - 85	67	61	E
					VT-762A	10 - 85	55	52	E
					VT-762B	10 - 85	50	48	E
					VT-630C	10 - 100	95	100	E

VR-280A (In) / Out of service
VR-280D (In) / Out of service
VT-B01 DI water On / (Off)
VT-680 to (VT-760, (TT-T01B))
VP-632 to (VC-630, VT-760)
VC-630 A BTM Temp. 270 Bottoms to (TT-T01A/B (Circ))
VC-630 C BTM Temp. 214 Bottoms to (VT-680, VT-760)

VT-202	A	B	E	F		
ON LINE	✓		✓			
OFF LINE						
VE-632	A	B	C	D	E	F
ON LINE	✓	✓			1-3	
OFF LINE						1-3

Time	Event
0600	DECR. VR-201C FOR S/D.
0700	B/I NaOH TRANSFER A=79 B=71
	FQ-710=20737140 FQ-711=11220808
0715	INCR. VR-201D 1 SM. SET - VV-403 ↑.
0720	S/D VR-201C
	INCR. VR-201D 1 SM. SET - VV-403 ↑.
0725	INCR. VR-201D 1 Lg. SET - VV-403 ↑.
0730	INCR. VR-201A/B 1 SET - VV-403 ↑.
	S/D AIR → VC-202C & H_2O → VV-206C
0740	INCR. VR-201 A/B 1 SET - VV-403 ↑.
0825	DECR. 3 O2 → VR-201 A/B - HCl ↓.
0830	INCR. VR-201A 1 SET - VV-403 ↑.
0845	VR-280 D IN SERVICE
0855	INCR. VR-201 B 1 SET - VV-403 ↑
1015	INCR. VR-201 B 1 SET - VV-403 ↑.
1030	FV-209C BLIND INSTALLED.
1110	DECR. VR-201A 1 SET & VR-201B 2 SETS -
	VV-403 ↓
1315	INCR. VR-201A/B 1 SET - VV-403 ↑
1330	RV-206A L&T FOR RD REPLACEMENT
	INSTR. REPAIRED FV-608A - CONDUIT FULL
	OF H_2O.
	VR-201C ARA-216's @ 6% O2
1530	PICA-214C CLOSED
1555	V-205C KEEPS OPENING WHILE ON MAN.
	VR-201A BTM. DOME STILL LEAKING WITH AMMONIA.
	VR-201C SAMPLE @ 1510 NO GOOD TO OPEN. VCM=47 PPM
	EDC = 54,969 ppm.
1630	MAINT. REPLACED RD-206A - UNLOCKED & LINED
	VT-680 EDC ↑ - RESAMPLE = . VP8614

Shift Supervisor:

DEPARTMENT	VCM	REVISION : 5 REVISION DATE: 03/18/04	LOG DATE: 4/5/04
LOG SHEET NAME	O.C. & 600 AREA LOG	EFFECTIVE : 10/26/99	
PAGE 1 OF 1	APPROVED BY: VCM PROD MGR	FILE: FM/VC 2001	SHIFT: D / (N)

Board Operator: L. Pickney
Field Operator: L. Cullis
Extra Operators: N. Escobar J. Schultz

6&7(C)

	ITEM	SPEC	1	2	3
VC-201A	HCl	< 1.8	1.9	1.9	1.8
	Cu++	< 100 ppm	6	8	10
VC-201B	HCl	< 1.8	1.2	1.1	1.1
	Cu++	< 100 ppm	10	12	12
VC-201C	HCl	< 1.8	—	S/D	S/D
	Cu++	< 100 ppm	2		
VC-201D	HCl	< 1	0.6	0.6	0.7
	Cu++	< 100 ppm	2	4	6
VC-202A	NaOH	< 1%	1.0	0.9	
	Na2C03	< 18%	14.1	13.7	
	NaHC03	< 0.5%	0	0	
VC-202B	NaOH	< 1%	2.1	2.3	
	Na2C03	< 18%	13.1	12.7	
	NaHC03	< 0.5%	0	0	
VC-202C	NaOH	< 1%	0	—	
	Na2C03	< 18%	3.1	—	
	NaHC03	< 0.5%	4.9	—	
VV-201A	pH	10	9.0	19:00 ONLY	
	Cl	< 1	0		
	Po4	30	2.1		
VV-201B	pH	10	9.2	19:00 ONLY	
	Cl	< 1	0		
	Po4	30	3.2		
VV-201C	pH	10	9.0	19:00 ONLY	
	Cl	< 1	1.1		
	Po4	30	3.4		
VV-201D	pH	10	9.7	19:00 ONLY	
	Cl	< 1	0.6		
	PO4	30	5.5		
VT-B01A/B	pH	9	8.9	19:00 ONLY	
VV-B02A/B	pH	9	9.0	19:00 ONLY	
	Cl	< 1	0		
VC-630A	EDC	< 0.5 ppm	0.4	0.1	E
VC-630B	EDC	< 0.4 ppm	/	/	/ E
	Cu++	10			
VT-680	EDC	< 0.4 ppm	0	0	0
	Cu++	< 4	0.1	0.2	0.6
	CHCl3	1	2.2	3.0	1.8
VC-630C	EDC	< 0.4 ppm	0	0	0 E
	Cu++	< 4	0.1	0.2	0.2
VT-762	NaOH	18 -22%			
VV-205	Na	< 50			Th
	EDC	> 97			Th
VT-203 H2O	pH	8 - 10	8.3		
VT-203 EDC	CO2	< 200 ppm			N/A
	pH	5 - 10			M/TH
VT-204 H2O	%NaOH	1 - 2%	0.2		
	Na2CO3	0	2.7		
VT-204 EDC	GC	98.90%	99.16		
	pH	5 - 10	7.5		
VC-201D @ VT-611C	pH				
	%NaOH				
	% HCl				
VR-201D	PSD				
	METALS	Fe/Cu#			
	CONE	< 0.5 ml/liter			
	CBD				

	Capacity Beg	Capacity End	Max. Temp. Temp	Max. Temp. Tray #	Ratio C2H4	Ratio O2	HCl Conv	C2H4 Comb	PDR 223
OC -A	85	85	493	8	1.014	.550	99.77	1.09	22
OC -B	85	85	487	1	.999	.551	99.86	0.81	26
OC -C	S/D	S/D	—	—	—	—	—	—	—
OC-D	98	98	465	T-4	.137	.23	99.7	97.03	

OC-D	Catalyst Inv.	Bed Level	Bed Density	Bed Velocity
	105160	33.0	22.5	1.587

DP Lower	DP Total
73.4	107.1

	SPEC. %	START LEVEL %	ENDING LEVEL %	
VT-680	10 - 85	31	26	E
VT-710	10 - 85	50	50	E
VT-760	0 - 85	61	55	E
VT-762A	10 - 85	52	67	E
VT-762B	10 - 85	48	62	E
VT-630C	10 - 100	100	95	E

VR-280A (In) / Out of service
VR-280C (In) / Out of service
VT-B01 DI water On (Off)
VT-680 to (VT-760, VT-T01B)
VP-632 to (VC-630, VT-760)
VC-630 A BTM Temp. 238 Bottoms to (TT-T01A/B, Circ)
VC-630 C BTM Temp. 215 Bottoms to (VT-680, VT-760)

VT-202	A	B	E	F		
ON LINE	✓		✓			
OFF LINE						
VE-632	A	B	C	D	E	F
ON LINE	✓	✓			1-3	
OFF LINE						1-3

Time	Event
1900	1900 - Took VR-201C Bag Sample to Lab
	S/u NaOH to VT 762 FQ-710 - 20801538
↓	" " " FQ-711 - 11220808
20:45	A-216 A1 High Put on Manual will Monitor
	VR-201C EDC 23,748 PPM VCM 23 PPM
↓	No Good will Get Another Sample.
21:00	S/u Ground wells & Lined up VC-630A to W.W.
22:20	VR-201C EDC 11563 PPM VCM 12 PPM No Good
2354	VR-201C EDC 8417 PPM VCM 13 PPM No Good
00:16	B/T NaOH to VT 762 FQ-710 - 20841724
↓	" " " FQ-711 - 11257614
0116	VR-201C EDC 6736 PPM VCM 10 PPM Good
0120	Put VR-201C On Air Circulation & Started
↓	Pulling Catalyst will Monitor B/T Air &
↓	VC-202C & H2O to W-206C
0230	S/u FU-205C Purge to 61C Vent Line
↓	Deinventoried VC-202C & S/D VP-205
Note	S/D VP-206 W-206C empty
0400	Locked & Tagged VC-202C L/B # 129
Note	VT-680 CHCl3 high will Monitor
↓	VC-202B NaOH high Put FC-2418
Note	VT 204 NaOH % low INC FIC 2036
↓	VC-202C Unit S/D

Shift Supervisor: [illegible]

EPA/FOIA2018-00577

APPENDIX H

FORMOSA DISTILLATION BOTTOMS PCB ANALYTICAL DATA

Total pages 1

RECEIVED
OCT 16 1995
BY:

Form R for Heavy Ends from VCM 6&7(C) 7(B)

WASTE ANALYSIS REPORT - PEISER LABORATORIES

DATE LOGGED : 13-OCT-95
GENERATOR : FORMOSA PLASTIC
ADDRESS : 201 FORMOSA DR.
CITY/STATE : POINT COMFORT TX 77978
PHONE NO. : 512 987-7458
CONTACT : DAVID HILL
WASTE NAME : DISTILLATION ENDS

CERTIFICATION SAMPLE ID: 9510008
EPA ID NO. : TXD 490 011 293
MPDS : Y
MSDS : N
CCR : Y
RP SALESPERSON: R. JONES
QUANTITY (CWT): 400

ICAP METALS SCREEN

ANALYTE	RESULT	UNITS
ALUMINUM	22	mg/Kg
ANTIMONY	11	mg/Kg
ARSENIC	<5	mg/Kg
BARIUM	<5	mg/Kg
BERYLLIUM	<5	mg/Kg
BISMUTH	<5	mg/Kg
CADMIUM	<5	mg/Kg
CALCIUM	61	mg/Kg
CHROMIUM	67	mg/Kg
COBALT	<5	mg/Kg
COPPER	6	mg/Kg
IRON	690	mg/Kg
LEAD	<10	mg/Kg
MAGNESIUM	88	mg/Kg
MANGANESE	<5	mg/Kg
M BDENUM	<10	mg/Kg
N EL	16	mg/Kg
POTASSIUM	48	mg/Kg
SELENIUM	<20	mg/Kg
SILVER	<5	mg/Kg
SODIUM	220	mg/Kg
THALLIUM	<10	mg/Kg
TIN	70	mg/Kg
VANADIUM	<10	mg/Kg
ZINC	11	mg/Kg

AA METAL SCREEN

ANALYTE	RESULT	UNITS
MERCURY	<1	mg/Kg

ANION SCREEN

ANALYTE	RESULT	UNITS
FLUORIDE	<100	mg/Kg
CHLORIDE	45	WEIGHT %
PHOSPHATE	200	mg/Kg

PHYSICAL ANALYSES

ANALYTE	RESULT	UNITS
ASH WT%	0.12	WEIGHT %
ASH CHARACTER	FRIABLE	ASH
PH	4.0	pH
ACIDITY AS H2SO4	N/A	WEIGHT %
VISCOSITY	<10	CENTIPOISE
TEMPERATURE	78	FAHRENHEIT
SPINDLE SIZE	LV2	BROOKFIELD
SPEED	60	RPM
WATER	<.1	WEIGHT %
HEAT CONTENT	6000	BTU/#
SEDIMENT	<1	WEIGHT %
DENSITY	1.25	g/mL
HEAVY METALS	<500	mg/Kg
FLASH POINT	93	FAHRENHEIT

VISUAL INSPECTION

GAS EVOLUTION	NO
NUMBER OF PHASES	ONE
COLOR	BLACK
OPAQUE	YES
SUSPENDED SOLIDS	NO
SEPARATED PHASES	NO

COMBUSTION PARAMETERS

ANALYTE	RESULT	UNITS
CARBON	31.2	WEIGHT %
HYDROGEN	2.30	WEIGHT %
NITROGEN	0.16	WEIGHT %
SULFUR	0.32	WEIGHT %
NEA, BTU/# 1800	2500	BTU/#

ORGANIC SCREEN

ANALYTE	RESULT	UNITS
PCB	<5	mg/Kg
BENZENE	800	mg/Kg

TEST BURN : YES
WASTE CODE(S) : VARIOUS D, F, AND K WASTE CODES SEE MPD.

T information has been prepared by Peiser Laboratories solely for the u of Rhone-Poulenc Basic Chemicals Co. and Peiser Laboratories makes no representations or warranties with respect to the information contained herein.

FPC3-01-00244

2002 TRI Air Emissions

VCM Plant

Total TRI Emissions

Chemical	Point Source	Fugitive Emissions	Releases	Total (lbs.)
Chlorine	1,688.00			1,688.00
Benzene	7.00	4.00		11.00
Ethylene	61.00	86.00		147.00
VCM	54.30	356.00	2,727.00	3,137.30
Chlorprene	5.00	23.00		28.00
Chloroform	41.00	26.00		67.00
Chlorethane	1.80	0.00		1.80
Carbon Tetrachloride	7.00	6.00		13.00
EDC	2,310.00	3,501.00		5,811.00
HCl	1,322.70	102.00		1,424.70
1,1,2 Trichlorethane		23.00		23.00
Tetrachloroethylene		5.00		5.00
Chlorobenzene		1.00		1.00
1,1,2,2 Tetrachloroethane				0.00
1,1,1,2 Tetrachloroethane				0.00
Methyl Chloride	1.50			1.50
1,1 Dichloroethane		14.00		14.00
Trans 1,2 DCE		5.00		5.00
1,3 Butadiene	0.30			0.30
Ethylene Glycol		8.00		8.00
Methanol		131.00		131.00
Dichlorodifluromethane (CFC-12)		13,727.00		13,727.00
Hexachlorobenzene	1.00	2.00		3.00
Total (lbs.)	5,500.60	18,020.00	2,727.00	26,247.60

EHS - Air Section

Revised: 4/8/2004

File Name: Vcm.xls!Total

2002 TRI Air Emissions

VCM Plant

Fugitive Emissions

Chemical	Emission Point (EPN)	Quanitity Emitted (lbs)	Total (lbs.)
Benzene	Process Fugitive	4.00	4.00
Ethylene	Maint.		
	Fugitives	86.00	86.00
EDC	Maintenance	1560.00	
	Fugitives	1941.00	3501.00
VCM	Maint.		
	Fugitives	356.00	
	Cooling Tower		356.00
Chloroprene	Fugitives	23.00	23.00
Chloroform	Fugitives	26.00	26.00
Chloroethane	Fugitives	0.00	0.00
1,1 Dichloroethane	Fugitives	14.00	14.00
Carbon Tetrachloride	Fugitives	6.00	6.00
Difluorodichloromethane	Maint.		
	Fugitives	13727.00	13727.00
HCl			
HCl - anhydrous	Fugitives	102.00	102.00
1,1,2 Trichloroethane	Fugitives	23.00	23.00
Tetrachloroethylene	Fugitives	5.00	5.00
Chlorobenzene	Fugitives	1.00	1.00
Trans 1,2 DCE			
1,1,2,2 Tetrachloroethane			
1,1,1,2 Tetrachloroethane			
1,2 Dichloroethylene	Fugitives	5.00	5.00
1,3 Butadiene			
Ammonia			
Ethylene Glycol	Fugitives	8.00	8.00
Methanol	Fugitives	131.00	131.00
Chlorine			
Hexachlorobenzene		2.00	2.00

Total (lbs.)	18,020.00

EPA/FOIA2018-00664

2001 TRI Air Emissions

VCM Plant

Total TRI Emissions

Chemical	Point Source	Fugitive Emissions	Releases	Total (lbs.)
Chlorine	8,778.00			8,778
Benzene	17.00	1.00		18
Ethylene	233.00	76.00	11.00	320
VCM	0.00	1,493.00	1,689.00	3,182
Chlorprene	87.00	7.00		94
Chloroform	98.00	8.00		106
Chlorethane	5.00			5
Carbon Tetrachloride	20.00	2.00		22
EDC	876.00	2,674.00	689.00	4,239
HCl	1,980.00	81.00		2,061
1,1,2 Trichlorethane		32.00		32
Tetrachloroethylene		17.00		17
Chlorobenzene		2.00		2
1,1,2,2 Tetrachloroethane		1.00		1
1,1,1,2 Tetrachloroethane		1.00		1
1,2 Dichloroethylene	19.00			19
1,1 Dichloroethane		5.00		5
Trans 1,2 DCE		2.00		2
1,3 Butadiene	1.00			1
Dichlorodifluromethane (CFC-12)		19,936.00	2,762.00	22,698
Total (lbs.)	12,114.00	24,338.00	5,151.00	41,603

2001 TRI Air Emissions

VCM Plant

Fugitive Emissions

Chemical	Emission Point (EPN)	Quanitity Emitted (lbs)	Total (lbs.)
Benzene		1.00	1.00
Ethylene	Maint.		
	Fug.	76.00	76.00
VCM	Maint.	21.00	
	Fug.	807.00	
	Cooling Tower	665.00	1493.00
Chloroprene		7.00	7.00
Chloroform		8.00	8.00
Chloroethane			
1,1 Dichloroethane		5.00	5.00
Carbon Tetrachloride		2.00	2.00
Difluorodichloromethane	Maint.	19936.00	
	Fug.		19936.00
EDC	Maint.	492.00	
	Fug.	2109.00	
	Cooling Tower	73.00	2674.00
HCl		1.00	1.00
HCl - anydrous		80.00	80.00
1,1,2 Trichloroethane		32.00	32.00
Tetrachloroethylene		17.00	17.00
Chlorobenzene		2.00	2.00
Trans 1,2 DCE		2.00	2.00
1,1,2,2 Tetrachloroethane		1.00	1.00
1,1,1,2 Tetrachloroethane		1.00	1.00
1,2 Dichloroethylene			
1,3 Butadiene			
Ammonia			
Chlorine			

Total (lbs.)	24,338.00

EPA/FOIA2018-00666

2000 TRI Air Emissions

VCM Plant

Total TRI Emissions

Chemical	Point Source	Fugitive Emissions	Releases	Total (lbs.)
Chlorine	2,532.00			2,532
Benzene	19.20	2.04		21
Ethylene	222.00	431.06	127.93	781
VCM	0.00	914.57	673.12	1,588
Chlorprene	102.00	10.74		113
Chloroform	114.00	12.17		126
Chlorethane	4.50	0.41		5
Carbon Tetrachloride	24.00	2.66		27
EDC	876.00	1,988.73	765.65	3,630
HCl	4,958.00	176.54	961.84	6,096
1,1,2 Trichlorethane		67.56	154.73	222
Tetrachloroethylene		38.04	95.60	134
Chlorobenzene		4.92		5
1,1,2,2 Tetrachloroethane		3.49	13.45	17
1,1,1,2 Tetrachloroethane		3.49		3
1,2 Dichloroethylene	22.20			22
1,1 Dichloroethane		6.75		7
Trans 1,2 DCE		2.35		2
1,3 Butadiene	0.78			1
Total (lbs.)	8,874.68	3,665.52	2,792.32	15,333

2000 TRI Air Emissions

VCM Plant

Fugitive Emissions

Chemical	Emission Point (EPN)	Quanitity Emitted (lbs)	Total (lbs.)
Benzene		2.04	2.00
Ethylene	Maint.	283.00	
	Fug.	148.06	431.06
VCM	Maint.	40.11	
	Fug.	874.46	914.57
Chloroprene		10.74	10.74
Chloroform		12.17	12.17
Chloroethane		0.41	0.41
1,1 Dichloroethane		6.75	6.75
Carbon Tetrachloride		2.66	2.66
EDC		1988.73	1988.73
HCl		176.54	176.54
1,1,2 Trichloroethane		67.56	67.56
Tetrachloroethylene		38.04	38.04
Chlorobenzene		4.92	4.92
Trans 1,2 DCE		2.35	2.35
1,1,2,2 Tetrachloroethane		3.49	3.49
1,1,1,2 Tetrachloroethane		3.49	3.49
1,2 Dichloroethylene			
1,3 Butadiene			
Ammonia			
Chlorine			

Total (lbs.)	3,665.48

EPA/FOIA2018-00668

2002 TRI Air Emissions

PVC Plant

Total TRI Emissions

Chemical	Point Source	Fugitive Emissions	Releases	Total (lbs.)
Methanol	1,920.00	0.00		1,920.00
VCM	3,140.00	2,502.00	0.00	5,642.00
Ammonia		0.00		0.00
Ethylene		17.00		17.00
Ethylene Glycol		0.00		0.00
Methylene Chloride		221.00		
HCL			0.00	0.00
bis-Phenol		0.00		0.00
Total (lbs.)	5,060.00	2,740.00	0.00	7,800.00

2002 TRI Air Emissions

PVC Plant

Fugitive Emissions

Chemical	Emission Point (EPN)	Quanitity Emitted (lbs)	Total (lbs.)
Methanol	Fugitive Emissions		0.00
VCM	Maintenance Emissions		
	ROL		
	Fugitive Emissions	1902.00	
	Equipment Openings	600.00	2502.00
Ammonia	Fugitive Emissions		0.00
Ethylene	Fugitive Emissions	17.00	17.00
Ethylene Glycol	Fugitive Emissions		0.00
Methylene Chloride	Fugitive Emissions	221.00	221.00
bis-Phenol	Fugitive Emissions		0.00

Total (lbs.)	2740.00

EPA/FOIA2018-00670

2001
~~2000~~ TRI Air Emissions

PVC Plant

Total TRI Emissions

Chemical	Point Source	Fugitive Emissions	Releases	Total (lbs.)
Methanol	1,760.00	130.00		1,890
VCM	4,220.00	2,713.00	1,355.00	8,288
Ammonia				0
Ethylene		17.00		17
Ethylene Glycol		3.00		3
HCL				0
bis-Phenol				0
Total (lbs.)	5,980.00	2,863.00	1,355.00	10,198

2001

~~2000~~ TRI Air Emissions

PVC Plant

Fugitive Emissions

Chemical	Emission Point (EPN)	Quanitity Emitted (lbs)	Total (lbs.)
Methanol	Fugitive Emissions	130.00	130.00
VCM	Maintenance Emissions	17.00	
	ROL	678.00	
	Fugitive Emissions	2017.00	
	Equipment Openings	1.00	2713.00
Ammonia	Fugitive Emissions		0.00
Ethylene		17.00	17.00
Ethylene Glycol	Fugitive Emissions	3.00	3.00
bis-Phenol	Fugitive Emissions		0.00

Total (lbs.)	2863.00

EPA/FOIA2018-00672

2000 TRI Air Emissions

PVC Plant

Total TRI Emissions

Chemical	Point Source	Fugitive Emissions	Releases	Total (lbs.)
Methanol	34,340.00	119.00		34,459
VCM	4,300.00	2,389.89	7,764.75	14,455
Ammonia		0.00		0
Ethylene		17.00		
Ethylene Glycol		1.00		1
HCL			1.14	1
bis-Phenol		31.00		31
Total (lbs.)	38,640.00	2,557.89	7,765.89	48,964

EHS - Air Section

Revised: 06/20/01

File Name: pvc 00.xlw

2000 TRI Air Emissions

PVC Plant

Fugitive Emissions

Chemical	Emission Point (EPN)	Quanitity Emitted (lbs)	Total (lbs.)
Methanol	Fugitive Emissions	119.00	119.00
VCM	Maintenance Emissions	0.39	
	ROL	472.00	
	Fugitive Emissions	1879.00	
	Equipment Openings	38.50	2389.89
Ammonia	Fugitive Emissions	0.00	0.00
Ethylene		17.00	17.00
Ethylene Glycol	Fugitive Emissions	1.00	1.00
bis-Phenol	Fugitive Emissions	31.00	31.00

Total (lbs.)	2557.89

EPA/FOIA2018-00674

ISO-9002 CERTIFIED
ISO-14001 CERTIFIED

P. O. BOX 700
201 FORMOSA DRIVE
POINT COMFORT, TEXAS 77978

PHONE: 361/987-7000
FAX: 361/987-2363

October 30, 2001

Certified Mail No.: 7000-1670-0005-1660-1998

Mr. Jeffrey P. Grief
Supervisor, Engineering Services Team (MC-171)
Enforcement Division
Texas Natural Resource Conservation Commission (TNRCC)
P.O. Box 13087
Austin, Texas 78711-3087

RE: Formosa Plastics Corporation, Texas
TNRCC Air Quality Account No. CB-0038-Q
Vinyl Plant Permit No. 7699/PSD-TX-226M6
Updated VCM Leak Detection and Elimination Program

Dear Mr. Grief:

Pursuant to 40 CFR 61.65(b)(8)(i), Formosa Plastics Corporation, Texas (FPC TX) is submitting an updated *Process Area VCM Leak Detection and Elimination Program* as required by Subpart F of the Vinyl Chloride NESHAP and Special Condition No. 16 of the state air permit. Originally issued in 1982, the plan describes the location, number, and frequency of points monitored, leak definition, and describes actions to be taken in the event of a leak. In addition, the plan includes a calibration and maintenance section for the system in both the Vinyl Chloride Monomer (VCM) and Polyvinyl Chloride (PVC) Plants.

The updated plan is for the VCM Unit only and includes an increase in the number of points monitored, replaces the analytical system of gas chromatography (GC) with mass spectrometry (MS), and includes monitoring for 1,2 Dichloroethane (EDC) in addition to VCM. The revised plan will afford the VCM Plant broader coverage for detecting leaks while decreasing the time required to indicate, validate, and repair a leak.

FPC-TX is currently configuring the MS system and anticipates implementation within 60 days of the postmark of this letter. *FPC-TX respectfully requests approval of the revised plan within this timeline.* Thank you for your consideration to this matter.

EPA/FOIA2018-00746

Should you have any questions, please contact [Brian Meek, Environmental Health, and Safety Department, at (361) 987-7457 or by e-mail at BrianMeek@ftpc.fpcusa.com.] b&7(c)

Sincerely;

R. P. Smith
Vice President/General Manager
Formosa Plastics Corporation, Texas

Attachment

EPA/FOIA2018-00747

cc: Mr. John York Certified Mail: 7000-1670-0005-1660-1981
Compliance, Assurance, and Enforcement Division
Region 6
U. S. Environmental Protection Agency
1445 Ross Avenue, Suite 1200
Dallas, Texas 75202-2733

Mr. Jim Bowman Certified Mail: 7000-1670-0005-1660-1974
Air Program Manager - Region 14
Texas Natural Resource Conservation Commission
Natural Resource Building
6300 Ocean Drive, Suite 1200
Corpus Christi, Texas 78412-5503

FORMOSA PLASTICS CORPORATION
POINT COMFORT, TEXAS
VINYL PLANT
(VCM)

PROCESS AREA LEAK DETECTION AND ELIMINATION PROGRAM

EPA/FOIA2018-00749

PREFACE

This program is developed to minimize the Vinyl Chloride (VCM) emissions from facilities in VCM services as defined in 40 CFR 61.61. The plan is identified in 40 CFR 61.65(b)(8)(i). It became effective immediately after the start-up of this plant. The new monitor will also monitor 1,2 Dichloroethane (EDC).

This plan describes the location, number, and frequency of points monitored. The plan contains a leak definition and also describes actions to be taken once a leak occurs. The plan also includes a calibration and maintenance section for the system.

I. Fixed Point Vinyl Chloride / 1,2 Dichloroethane Monitoring System

For the VCM Plant, there are monitors and detectors located in specific areas for leak detection.

The main equipment in this system is a VG Gas Sentinel Mass Spectrometer. This analyzer is equipped with a microprocessor based data processor and control module capable of data acquisition, data processing, and timing functions and they operate in conjunction with a mass spectrometer analyzer. A total of sixty-one (61) detecting points are installed in the VCM plant. The locations of these detecting points and the air analyzers are indicated in Appendix A. Air is drawn continuously through these points and analyzed for VCM and EDC with the mass spectrometer. Alarms are audible and located in the VCM control room. Raw Data Averaging, Time Weighted Averaging are printed twice daily. The system has a repeatability of 5% of full scale. Each point will repeat about at least every thirty (30) minutes. Noting the number of points for the analyzer and multiplying by the individual sample time of each point calculates the actual cycle of each monitoring point. Each point takes

approximately thirty (30) seconds to run.

Example: 61 points/analyzer x 30 sec. = 30 minutes

II. Background VCM / EDC Concentration Measurement

All process areas are considered to have less than 1 ppm VCM and less than 1 ppm EDC background concentration. The current monitor, as configured, show zero (0) ppm unless an activity occurs, which accounts for higher readings.

Therefore, readings of the ambient air monitor points will be used as is, without background adjustment.

III. Definition of a Leak

Whenever an area monitor point shows 1 ppm VCM or greater, this will indicate a leak. For EDC a leak is defined as 25 ppm. The unit is set with an audible alarm at 1 ppm VCM and 25 ppm EDC. Additional alarm settings may be added based on unit performance.

IV. VCM / EDC Leak Detection Plan of Action

1. Whenever the area monitor goes into alarm, greater than 1 ppm VCM or 25 ppm EDC, Operations will immediately investigate the cause of the alarm.

   This will result in a field walk-though to determine the cause. The date, time, location, and concentration of each leak will be documented in the Ambient Air Monitor Log (sample attached, Appendix "B").

2. Once a VCM or EDC leak has been detected Operations will follow the normal procedure for handling small leaks.

   Procedure Name: General Procedure for Small Leak/Handling Small Leak
   Document Code: FTVC-0041 (VCM Unit)

This procedure outlines the safest, fastest possible approach to isolating and mitigating small leaks. It also includes notification for the leaks. The operation unit will utilize the "Notification to Agencies" Procedure in the event a leak is found.

V. Calibration and Maintenance

1. A span check on the analyzer will be done daily with a VCM standard containing approximately 10 ppm VCM.
2. A span check on the analyzer will be done daily with an EDC standard containing approximately 10 ppm EDC.
2. Calibration gas cylinder standards are used that are certified by the manufacturer. The shelf life is affixed to the cylinder from the manufacturer.
3. Preventive Maintenance is performed on the unit as required to maintain that unit. There will be a logbook identifying activities, if any, performed on the unit. There will be a pm performed on the unit on a periodic basis as recommended by the Maintenance Engineer and as suggested by manufacturer. Attached is a copy of a typical Instrument PM sheet. (Appendix "C"). These may change as required to maintain unit.

VI. Record Keeping

Records of the VCM leaks will be maintained for three (3) years as required by 40 CFR 61.71.

APPENDIX "A"

VCM AREA
VCM LEAK DETECTOR LOCATIONS

Stream Number	Location
1	NE of VV-769A/B
2	NE of VC-230D
3	S of VV-207D
4	NE of VV-201D
5	SW of VV-299D
6	NE of VE-501F
7	W of VV-402C
8	W of VV-210D
9	S of VC-401D
10	N of VC-401E
11	NW of VE-401D
12	W of VT-641D
13	W of VR-401C
14	N of VE-401C
15	SE of VP-402A/B/C
16	W of VE-406A
17	NW of VE-501C
18	S of VP-205B
19	NW of PV-510B
20	SE of VR-201C
21	N of VR-280
22	SE of VC-202A
23	NE of VE-401B
24	Top of VCM Control Room S

Stream Number	Location
25	Top of VCM Control Room N
26	NW of VR-102
27	S of VE-504A
28	S VV-505C
29	N of VE-503B
30	N of VE-311A
31	Between VE-303C/D
32	NW of VE-104A
33	S of VP-105B
34	W of VE-504D/E/F
35	NE of VE-504D/E/F
36	N of VC-503B
37	S of VC-502B
38	N of VV-505F
39	E of VV-505G
40	N of VV-512
41	SE of VV-511A
42	W of old VT-763A/B area
43	NW of VT-766
44	NW of VT-730
45	SW of VV-751B
46	N of VH-801C
47	N of VH-801B
48	N of VH-801A
49	S of VT-720
50	S of VT-721

Stream Number	Location
51	S of VP-731A
52	N of VT-731
53	W of VT-731
54	E of VT-731
55	S of VT-732
56	W of VT-722
57	NW of VT-760
58	S of VT-763C
59	S of VT-763D
60	W of VT-680
61	Analyzer House

~~Maint~~
Inst.

bcc: Clay Coleman 10/1/01
Donald Janis 10/21
Steve Marwitz
Bharat Nike 10/24/01
Joe Donaldson 10/30/01
John T. Hyak 10/24/01
Brian Meek 10/24/01
Central File A. I. 7. b. ____

1(B)

Appendix J

Frequency of Causes of Excess Emissions by Cause Type

AllCOPs	2001 1	2001 2	2001 3	2001 4	2002 1	2002 2	2002 3	2002 4	2003 1	2003 2	2003 3	Total
"B" refrigerator unit startup/shutdown									2			2
1001B startup/shutdown									1			1
1002B startup/shutdown									1			1
2D-301										1		1
3D-301										15		15
4160 switchgear problem								4				4
541									4		2	6
A10543 problems									1			1
Absorber manway problems									22			22
Absorber problems									22	8		30
ACU regeneration					4						2	6
Adjusting feed rates	47	17	57	6	7	1	3	20		1	2	161
Adjusting furnace feed rates				5		3	1	12			1	22
Adjusting reactor composition		1										1
AIC-351B problems					6							6
Air leak	2											2
AL-361B problems							1					1
Analyzer calibration	1			15								16
Analyzer maintenance	2											2
Analyzer problems			19		11	87	17	23	2	2	63	224
Assist gas	1											1
A-Train open vent							4					4
B-351 startup/shutdown						5				3		8
B-352 startup/shutdown						3						3
Blocked process vent	40											40
Blower problems			1			1				6	9	17
Blown fuse					1				4			5
Boiler feed water maintenance									1			1
Boiler problems					2							2
Bottom damper problems										1		1
B-Train startup/shutdown							3			1		4
BTU value problems		13	11	20		18						62
Burner modification			1									1
BV-357/BV-358B										1		1
C1-470									2			2
C1-470 startup/shutdown									32	10	6	48
C2/430 problems											1	1
C2-470 startup/shutdown			3						14	2	19	38
C4 regen										4	5	9
C-470/C-480											2	2
C980 1/A PSV problems									2			2
Changes in ambient weather conditions					3		3	26	4	25	7	68
Changing feed stock						2						2
Cogen turbine problems								5				5
Combustion air problems					1							1
Combustion problems		2		1		1		11				15

Control equipment problems						11	37	28	16	138		230
Control system maintenance					2							2
Cooling water problem				1								1
D1-200										2		2
D1-400											5	5
D2-200										4		4
D300										2		2
D301/2D301/3D301 venting										4		4
D-353										1	1	2
D-615									4	2		6
DC-351A problems											8	8
DC-351C problems										3		3
DCS upgrade						1						1
DR-351C problems			3	1							1	5
DR-351C startup/shutdown	10	13	2	1								26
Draft problems					3	3						6
Drain valve problems		1	5	8					1			15
D-Train 1 catalyst											1	1
DV-102									3			3
Electrical demand problems				1							3	4
Equipment failure			5									5
Equipment leak			1	4	1	1	5	12	3	15	1	43
Excess air control problems	15					6	6	2	42	18		89
Expansion joint problems	11											11
Expansion joint repair									1			1
F1									5			5
F-1330										2		2
F1470									2			2
F2-330		3										3
Feed flowrate problems									1			1
Feed header problems					2							2
Feed problems		1	3					1		8		13
Feeding furnace				4				3	1	2	18	28
Filter changeout											1	1
Filter problems							7					7
Fin fan problems	1											1
Firebox pressure swing						2						2
Fire-eye problems	1			5								6
Flame arrestor problem			3			2				1		6
Flame failure	3	27	76	31	3	18	8	13		4	12	195
Flare flowrate problems			1			2						3
Flare startup/shutdown	8	13	3		5	4	1	2		1	3	40
Flare steam problems					4		2					6
Flare tripped		20	62	31	3	24	6	1				147
Flowrate problems	2	17	14	3	7	1			4	1		49
Fogger-system nozzle installation		1										1
FR6 startup/shutdown										3		3
FT-300 problems										2		2
Fuel gas composition change					21	4						25
Fuel gas flowrate problems	7	3					1		4	1	1	17
Fuel gas pressure problems	2				3	5	1	3	8		10	32
Fuel gas system maintenance					14							14

7(B)

Fuel gas valve problems				4		4						8
Fuel gas valve servo problems								10		1		11
Fuel nozzle problem	6	5				5		7				23
Furnace feed problems									13			13
Furnace loaded							4	78				82
Furnace problems	1						2		1		2	6
Furnace startup/shutdown	14	13	27	15	12	4	92	14	21	13	14	239
G105C problem								1	1			2
Gas equalization problem									4			4
Gas flow fluctuation				3								3
Gas plant startup/shutdown				2								2
Gas turbine startup/shutdown	21	36	52	35	7	11	2	52	8	4		228
GB451 controller problems								1				1
GC-310		1										1
GC-320									1			1
Generator differential fault		8	6						1	2		17
Grade change	1								12			13
Guide vane open				2								2
GV-910							1			1		2
H-501									31	6	1	38
H-501/H-502									6	2		8
H-502									16	8	3	27
H-921 startup/shutdown	14		5	2								21
H-923 startup/shutdown		2										2
H923A problem			141	166								307
H-923A startup/shutdown			6	11	5	2		3				27
Heat exchanger problems				2								2
High level										1		1
HRSG problems	1		2	7				6				16
HRSG tube leak	10							1		1		12
Hydrocarbon flowrate										2		2
I.D. fan problems						1			1		1	3
IEM load problems			2									2
IEM startup/shutdown									3			3
Ignition failure								1				1
Ignition problems		11										11
Incinerator problems							1		2	4		7
Incinerator startup/shutdown	10	35	57	49	77	29	57	65	13	53	41	486
Incorrect tank line-up											27	27
Inlet stream shutdown											1	1
Inspection	2	7		8	1	1	1		1	2		23
Inspection/maintenance	1											1
Instrument air problems			1									1
Instrumentation air problems									2	1		3
Instrumentation maintenance			3		1			1				5
Instrumentation problems	1	1	6	3	5			1		15	2	34
Interlock 3-T								1				1
Knockout drum full											2	2
Level control problems							1			1	3	5
Liquid system problems							1				10	11
Load problem								1				1
Lost reaction											1	1
Low 1A pressure									2			2

7(B)

Low level							1					1
Low pressure						1	1	1				3
Maintenance	17	38	29	5	89	31	61	61	21	24	33	409
MTR system					4						1	5
N2 purge			2									2
N2 venting			12									12
NOx steam injection system problems		4	1	1				1	4	4	2	17
Off-line wash			3	3		4		8			1	19
Off-spec unit feed											1	1
Oxygen analyzer problems				20			2					22
PH probe problems							1					1
Pilot light problems		11	3		3	2	4					23
Plant shutdown/startup due to hurricane			10						1		39	50
Plant startup/shutdown	16				1	4	9	2	1		1	34
PLC equipment problems							1					1
PLC problems							5					5
Plugging	23						7		2			32
Power augmentation	3	13	24			1						41
Power demand problems										2		2
Power outage			1			6			2		6	15
Power problems			1									1
Pressure drop survey						1						1
Pressure problems									2	3	3	8
Problems relighting										2		2
Process upset	8			9	56	92	73	31	32	6	9	316
PSV problem											3	3
Pump problems							1					1
Purging											5	5
R1-300 vent										2		2
Reaction problems	7											7
Reactor pressure problems									4			4
Reactor startup/shutdown			5	3		18			2		4	32
Reactor venting										2	1	3
Reduced IEM demand			1									1
Reduced power demand			2									2
Refractory problem							1					1
Relief valve problem					6			1				7
S Vent									2	4	1	7
S-352											2	2
Scrubber flow problems									2			2
Secondary drum level control installation		1										1
Software problems		2										2
SRV									2			2
Stack replacement						1						1
Startup/shutdown		36	45	31	17	12	19	1	1	76	48	286
Steam injection problems			1			1		1	2	1		6
Steam system problems								4	4	3		11
Steam to Olefins flare problems											1	1
Swapping equipment	2		5	12	6	4			7	6		42
Swapping furnaces						1	2		5	1	1	10

7(B)

Swapping incinerators	1		1	9				10	2	23	1	47
T1-351B problems											4	4
Temperature control problems	4	2	4	16		1	3	6	82	83	28	229
Testing process operations		3			4	3	1	3	23			37
Torque converter problems										1		1
Train deactivation											4	4
Train-1			2						2	2	2	8
Train-1/Train-2										1		1
Tube problems	27	3	4	12	2		16	1	3	1		69
Unknown Causes	20	15	41	8	14	15	31	103	173	42	27	489
Venting									13	6	1	20
Vessel 470 startup/shutdown											2	2
Vessel 480 startup/shutdown											1	1
Vessel 502 problem										2		2
Vessel 615 problem									2		2	4
Vibration monitoring sensor installation	1											1
Water in analyzer					1							1
Water-in-feed problems									1			1
Zimpro firebox/flare routing								2				2
											Total	6098

7(B)

ISO-9002 CERTIFIED
ISO-14001 CERTIFIED

P. O. BOX 700
201 FORMOSA DRIVE
POINT COMFORT, TEXAS 77978

PHONE: 361/987-7000
FAX: 361/987-2363

FILE

January 17, 2001

Mr. Samuel Coleman, P. E.
Director, Compliance Assurance and Enforcement Division (MC-6EN)
U. S. Environmental Protection Agency - Region 6
1445 Ross Avenue, Suite 1200
Dallas, Texas 75202-2733

Certified Mail: 7000-0520-0017-6336-4208

RE: Formosa Plastics Corporation, Texas
TNRCC Air Quality Account No. CB-0038-Q
Traffic Facility - Permit No. 19871/PSD-TX-760M5
EDC Plant - Permit No. 19199/PSD-TX-760M5
EG Plant - Permit No. 19198/PSD-TX-760M5
VCM Plant - Permit No. 7699/PSD-TX-226M6
GHU Unit within Olefins Plant - Permit No. 19168/PSD-TX-760M5
HON Subpart H – Semiannual Report

Dear Mr. Coleman:

As required by 40 CFR 63.182 (d), Formosa Plastics Corporation, Texas (FPC-TX) is hereby submitting semiannual fugitive emissions leak reports required by Subpart H of the HON. This report addresses the number of valves, pumps, compressors, agitators, and connectors found to be leaking as well as the results of the monitoring conducted during the semiannual periods. The following are the units affected and the reporting period for each:

Vinyl Chloride Monomer Unit (VCM)	April 24, 2000 – October 24, 2000
Ethylene Dichloride Plant (EDC)	April 24, 2000 – October 24, 2000
Ethylene Glycol Plant (EG)	April 24, 2000 – October 24, 2000
Traffic Facility – Tanks DT-403 and FT-D02	April 24, 2000 – October 24, 2000
Gasoline Hydrotreater Unit (GHU)	June 10, 2000 – December 10, 2000

If you have any questions regarding this report, please contact [Brian Meek at (361) 987-7457.] b7(c)

Sincerely,

R. P. Smith
Vice President/General Manager
Formosa Plastics Corporation, Texas

1/17/01

Attachments

A. I. 8. b. 010

Formosa Plastics Corporation, Texas
201 Formosa Drive
Point Comfort, Texas 77978

HON SEMIANNUAL EQUIPMENT LEAK REPORT - 40 CFR 63.182 (d)
Process Unit Identification: Vinyl Chloride Monomer Facility
Permit No. 7699/PSD-TX-226M6
Reporting Period: April 24, 2000 - October 24, 2000

	Month						
	April	May	June	July	August	September	October
Valves							
Number Monitored (1), (2)	0	6930	230	7173	7	183	7144
Number Leaking	0	2	0	2	0	0	2
Number Not Repaired	0	0	0	0	0	0	0
Percent Leaking (3)	N/A	0.03%	0.00%	0.03%	0.00%	0.00%	0.03%
Flanges and Connectors							
Number Monitored	0	0	0	0	0	0	20051
Number Leaking	0	0	0	0	0	0	0
Number Not Repaired	0	0	0	0	0	0	0
Percent Leaking	N/A	N/A	N/A	N/A	N/A	N/A	0.00%
Pumps							
Number Monitored (4)	0	5	5	5	5	5	0
Number Leaking	0	0	0	0	0	0	0
Number Not Repaired	0	0	0	0	0	0	0
Percent Leaking	N/A	0.00%	0.00%	0.00%	0.00%	0.00%	N/A
Compressors							
Number Monitored (4)	0	3	3	3	3	3	0
Number Leaking	0	0	0	0	0	0	0
Number Not Repaired	N/A	0.00%	0.00%	0.00%	0.00%	0.00%	N/A
Agitators							
Number Monitored (4)	0	1	1	1	1	1	0
Number Leaking	0	0	0	0	0	0	0
Number Not Repaired	N/A	0.00%	0.00%	0.00%	0.00%	0.00%	N/A
Closed-Vent Systems	The annual inspection of the closed-vent systems within the VCM Facility was completed on September 19, 2000.						

Notes:

(1) The total valve count changed from previous to current due to equipment being temporarily or permanently out of service.

(2) Valves monitored in June and September include those designated as Quarterly Difficult to Monitor (QDTM).

(3) Percent of valves leaking does not include valves that are nonrepairable or those being remonitored after repair.

(4) Reflects only pumps, compressors, or agitators monitored during this reporting period.

Explanations for Delay of Repair: N/A for the reporting period.

Dates of Process Unit Shutdowns: See Attached Page

Formosa Plastics Corporation, Texas
201 Formosa Drive
Point Comfort, Texas 77978

HON SEMIANNUAL EQUIPMENT LEAK REPORT - 40 CFR 63.182 (d)
Process Unit Identification: Ethylene Dichloride Facility
Permit No. 19199/PSD-TX-760M5
Reporting Period: April 24, 2000 - October 24, 2000

	Month						
	April	May	June	July	August	September	October
Valves							
Number Monitored (1)	0	459	1347	0	1761	3	22
Number Leaking	0	0	1	0	0	0	0
Number Not Repaired	0	0	0	0	0	0	0
Percent Leaking (2)	N/A	0.00%	0.06%	N/A	0.00%	N/A	N/A
Flanges and Connectors							
Number Monitored	0	7	1	0	0	0	0
Number Leaking	0	0	0	0	0	0	0
Number Not Repaired	0	0	0	0	0	0	0
Percent Leaking (3)	N/A	0.00%	0.00%	N/A	N/A	N/A	N/A
Pumps	All pumps in the EDC Facility are exempt from HON monitoring requirements.						
Compressors	Currently, there are no compressors in VOC service within the EDC Facility.						
Agitators	Currently, there are no agitators within the EDC Facility.						
Closed-Vent Systems	The annual inspection of the closed-vent systems within the EDC Facility was completed on September 19, 2000.						

Notes:
(1) Component count changed due to an updated count.
(2) Percent of valves leaking does not include valves that are nonrepairable or those being remonitored after repair.
(3) Percent of leaking connectors includes those nonrepairable / total.
(4) Valves monitored in October include those designated as Quarterly Difficult to Monitor (QDTM).

Explanations for Delay of Repair: N/A

Dates of Process Unit Shutdowns: See Attached Page

Formosa Plastics Corporation, Texas
201 Formosa Drive
Point Comfort, Texas 77978

HON SEMIANNUAL EQUIPMENT LEAK REPORT - 40 CFR 63.182 (d)
Process Unit Identification: Ethylene Glycol Facility
Permit No. 19198/PSD-TX-760M5
Reporting Period: April 24, 2000 - October 24, 2000

	Month						
	April	May	June	July	August	September	October
Valves							
Number Monitored (1)	0	2	2270	38	2231	83	0
Number Leaking	0	0	0	0	5	0	0
Number Not Repaired	0	0	0	0	0	0	0
Percent Leaking (2)	N/A	0.00%	0.00%	0.00%	0.22%	0.00%	N/A
Flanges and Connectors							
Number Monitored	0	0	0	0	0	0	0
Number Leaking	0	0	0	0	0	0	0
Number Not Repaired	0	0	0	0	0	0	0
Percent Leaking	N/A	N/A	N/A	N/A	N/A	N/A	N/A
Pumps	All pumps in the EG Facility are exempt from HON monitoring requirements.						
Compressors	Currently, there are no compressors in VOC service within the EG Facility.						
Agitators	Currently, there are no agitators within the EG Facility.						
Closed-Vent Systems	The annual inspection of the closed-vent systems within the EG Facility was completed on July 27, 2000.						

Notes:

(1) Component count changed due to an updated count.

(2) Percent of valves leaking does not include valves that are nonrepairable or those being remonitored after repair.

(3) Valves monitored in July and September include those designated as Quarterly Difficult to Monitor (QDTM).

Explanations for Delay of Repair: N/A for the reporting period.

Dates of Process Unit Shutdowns: See Attached Page

Formosa Plastics Corporation, Texas
201 Formosa Drive
Point Comfort, Texas 77978

HON SEMIANNUAL EQUIPMENT LEAK REPORT - 40 CFR 63.182 (d)
Process Unit Identification: Traffic Department Tanks DT 403 and FT-D02
Permit No. 19871/PSD-TX-760M5
Reporting Period: April 24, 2000 - October 24, 2000

	Month						
	April	May	June	July	August	September	October
Valves							
Number Monitored (1)	0	150	2	0	152	0	0
Number Leaking	0	0	0	0	0	0	0
Number Not Repaired	0	0	0	0	0	0	0
Percent Leaking	N/A	0.00%	0.00%	N/A	0.00%	N/A	N/A
Flanges and Connectors							
Number Monitored (2)	0	37	0	0	37		0
Number Leaking	0	0	0	0	0	0	0
Number Not Repaired	0	0	0	0	0		0
Percent Leaking	N/A	0.00%	N/A	N/A	0.00%	N/A	N/A
Pumps	All pumps associated with this tank are exempt from HON monitoring requirements.						
Compressors	Currently, there are no compressors in VOC service within the Traffic Facility.						
Agitators	Currently, there are no agitators within the Traffic Facility.						
Closed-Vent Systems	The annual inspection of the closed-vent systems on the tanks was completed on September 19, 2000.						

Notes: None

Explanations for Delay of Repair: N/A for the reporting period.

Dates of Process Unit Shutdowns: See Attached Page

Formosa Plastics Corporation, Texas
201 Formosa Drive
Point Comfort, Texas 77978

HON SEMIANNUAL EQUIPMENT LEAK REPORT - 40 CFR 63.182 (d)
Process Unit Identification: Gasoline Hydrotreater Unit
Permit No. 19168/PSD-TX-760M5
Reporting Period: June 10, 2000 - December 10, 2000

	Month						
	June	July	August	September	October	November	December
Valves							
Number Monitored (1)	129	7	0	2447	5	2396	1
Number Leaking	1	0	0	5	0	6	0
Number Not Repaired	0	0	0	0	0	0	0
Percent Leaking (2)	0.32%	0.00%	N/A	0.20%	0.00%	0.25%	0.00%
Flanges							
Number Monitored	0	1	0	2411	0	2347	0
Number Leaking	0	0	0	0	0	0	0
Number Not Repaired	0	0	0	0	0	0	0
Percent Leaking (3)	N/A	N/A	N/A	0.00%	N/A	N/A	N/A
Connectors							
Number Monitored (4)	0	0	0	45	0	2993	0
Number Leaking	0	0	0	0	0	1	0
Number Not Repaired	0	0	0	0	0	0	0
Percent Leaking	N/A	N/A	N/A	N/A	N/A	0.03%	N/A
Pumps	All pumps in the GHU are exempt from HON monitoring requirements.						
Compressors	All compressors in the GHU are exempt from HON monitoring requirements.						
Agitators	All agitators in the GHU are exempt from HON monitoring requirements.						
Closed-Vent Systems	The annual inspection of the closed-vent systems within the GHU Facility was completed on September 26, 2000.						

Notes:
(1) Valve count changed due to an updated valve count.
(2) Percent of valves leaking does not include valves that are nonrepairable or those being remonitored after repair. The percent leaking includes those monitored in Q2, but before this reporting period.
(3) Percent of leaking flanges (connectors) includes those nonrepairable / total.
(4) LeakDas software generated these connectors as part of the valve monitoring run. These components were monitored and therefore are being reported in this semi-annual report.

Explanations for Delay of Repair: N/A for the reporting period.

Dates of Process Unit Shutdowns: See Attached Page

bcc:
Clay Coleman
Jeff Lin
Sherman Ko
S. C. Cheng
Jay Lo
Steve Marwitz 1/18/1
John T. Hyak 01/14/01
Brian Meek 1/15/01
Central File A. I. 8. b. ___

U.S. Postal Service
CERTIFIED MAIL RECEIPT
(Domestic Mail Only; No Insurance Coverage Provided)

7000 0520 0017 4336 4208

EHS

Postage	$ .76
Certified Fee	1.90
Return Receipt Fee (Endorsement Required)	1.50
Restricted Delivery Fee (Endorsement Required)	
Total Postage & Fees	$ 4.16

Postmark Here: POINT COMFORT TX 77978 JAN 22 2001

Recipient's Name (Please Print Clearly) (To be completed by mailer)
Mr. Samuel Coleman
Street, Apt. No.; or PO Box No.
1445 Ross Ave, Suite 1200
City, State, ZIP+4
Dallas Tx. 75202-2733

PS Form 3800, February 2000 See Reverse for Instructions

U.S. Postal Service
CERTIFIED MAIL RECEIPT
(Domestic Mail Only; No Insurance Coverage Provided)

7000 0520 0017 4336 4222

EHS

Postage	$ .76
Certified Fee	1.90
Return Receipt Fee (Endorsement Required)	1.50
Restricted Delivery Fee (Endorsement Required)	
Total Postage & Fees	$ 4.16

Postmark Here: POINT COMFORT TX 77978 JAN 22 2001

Recipient's Name (Please Print Clearly) (To be completed by mailer)
Jay Santos
Street, Apt. No.; or PO Box No.
PO Box 13087
City, State, ZIP+4
Austin Tx. 78711-3087

PS Form 3800, February 2000 See Reverse for Instructions

U.S. Postal Service
CERTIFIED MAIL RECEIPT
(Domestic Mail Only; No Insurance Coverage Provided)

7000 0520 0017 4336 4215

EHS

Postage	$ .76
Certified Fee	1.90
Return Receipt Fee (Endorsement Required)	1.50
Restricted Delivery Fee (Endorsement Required)	
Total Postage & Fees	$ 4.16

Postmark Here: POINT COMFORT TX 77978 JAN 22 2001

Recipient's Name (Please Print Clearly) (To be completed by mailer)
Jim Bowman
Street, Apt. No.; or PO Box No.
6300 Ocean Drive, Suite 1200
City, State, ZIP+4
Corpus Christi Tx. 78412

PS Form 3800, February 2000 See Reverse for Instructions

EPA/FOIA2018-00799

SENDER: COMPLETE THIS SECTION

- Complete items 1, 2, and 3. Also complete item 4 if Restricted Delivery is desired.
- Print your name and address on the reverse so that we can return the card to you.
- Attach this card to the back of the mailpiece, or on the front if space permits. RH | Bm

1. Article Addressed to:

Jeff Saitas
PO Box 13087
Austin, TX. 78711-3087

COMPLETE THIS SECTION ON DELIVERY

A. Received by (Please Print Clearly) | B. Date of Delivery

C. Signature
X ☐ Agent ☐ Addressee

D. Is delivery address different from item 1? ☐ Yes
If YES, enter delivery address below: ☐ No

POLLO SENNICHT
MAIL AND MESSENGER SERVICE
JAN 31 2001
STATE PURCHASING AND GENERAL SERVICES COMMISSION

3. Service Type
☐ Certified Mail ☐ Express Mail
☐ Registered ☐ Return Receipt for Merchandise
☐ Insured Mail ☐ C.O.D.

4. Restricted Delivery? (Extra Fee) ☐ Yes

2. Article Number (Copy from service label)
7000 0520 0017 6336 4222

PS Form 3811, July 1999 Domestic Return Receipt 102595-00-M-0952

SENDER: COMPLETE THIS SECTION

- Complete items 1, 2, and 3. Also complete item 4 if Restricted Delivery is desired.
- Print your name and address on the reverse so that we can return the card to you.
- Attach this card to the back of the mailpiece, or on the front if space permits. BM RH EHS

1. Article Addressed to:

Samuel Coleman, P.E.
U.S. EPA Region 6 (MC-6EH)
1445 Ross Ave. Ste 1200
Dallas, Tx 75202-2733

COMPLETE THIS SECTION ON DELIVERY

A. Received by (Please Print Clearly) | B. Date of Delivery

C. Signature
X ☐ Agent ☐ Addressee

MICHAEL J. BAUMANN PCO
JAN 29 2001

D. Is delivery address different from item 1? ☐ Yes
If YES, enter delivery address below: ☐ No

3. Service Type
☒ Certified Mail ☐ Express Mail
☐ Registered ☐ Return Receipt for Merchandise
☐ Insured Mail ☐ C.O.D.

4. Restricted Delivery? (Extra Fee) ☐ Yes

2. Article Number (Copy from service label)
7000-0520-0017-6336-4208 1.18.01

PS Form 3811, July 1999 Domestic Return Receipt 102595-00-M-0952

SENDER: COMPLETE THIS SECTION

- Complete items 1, 2, and 3. Also complete item 4 if Restricted Delivery is desired.
- Print your name and address on the reverse so that we can return the card to you.
- Attach this card to the back of the mailpiece, or on the front if space permits. RH | Bm

1. Article Addressed to:

Jim Bauman
300 Ocean Drive,
Suite 1200
Corpus Christi, Tx.
78412

COMPLETE THIS SECTION ON DELIVERY

A. Received by (Please Print Clearly) Judith Walts | B. Date of Delivery 1/23/01

C. Signature
X Judith Walts ☐ Agent ☐ Addressee

D. Is delivery address different from item 1? ☐ Yes
If YES, enter delivery address below: ☐ No

3. Service Type
☐ Certified Mail ☐ Express Mail
☐ Registered ☐ Return Receipt for Merchandise
☐ Insured Mail ☐ C.O.D.

4. Restricted Delivery? (Extra Fee) ☐ Yes

2. Article Number (Copy from service label)
7000 0520 0017 6336 4215

PS Form 3811, July 1999 Domestic Return Receipt 102595-00-M-0952

EPA/FOIA2018-00800

ISO-9002 CERTIFIED
ISO-14001 CERTIFIED

P. O. BOX 700
201 FORMOSA DRIVE
POINT COMFORT, TEXAS 77978

PHONE: 361/987-7000
FAX: 361/987-2363

July 19, 2001

Mr. Samuel Coleman, P. E.
Director, Compliance Assurance and Enforcement Division (MC-6EN)
U. S. Environmental Protection Agency - Region 6
1445 Ross Avenue, Suite 1200
Dallas, Texas 75202-2733

Certified Mail: 7000-1670-0009-4185-4549

RE: Formosa Plastics Corporation, Texas
TNRCC Air Quality Account No. CB-0038-Q
Traffic Facility - Permit No. 19871/PSD-TX-760M5
EDC Plant - Permit No. 19199/PSD-TX-760M5
EG Plant - Permit No. 19198/PSD-TX-760M5
VCM Plant - Permit No. 7699/PSD-TX-226M6
GHU Unit within Olefins Plant - Permit No. 19168/PSD-TX-760M5
HON Subpart H – Semiannual Report

Dear Mr. Coleman:

As required by 40 CFR 63.182 (d), Formosa Plastics Corporation, Texas (FPC-TX) is hereby submitting semiannual fugitive emissions leak reports required by Subpart H of the HON. This report addresses the number of valves, pumps, compressors, agitators, and connectors found to be leaking as well as the results of the monitoring conducted during the semiannual periods. The following are the units affected and the reporting period for each:

Vinyl Chloride Monomer Unit (VCM)	October 24, 2000 – April 24, 2001
Ethylene Dichloride Plant (EDC)	October 24, 2000 – April 24, 2001
Ethylene Glycol Plant (EG)	October 24, 2000 – April 24, 2001
Traffic Facility – Tanks DT-403/404 and FT-D02	October 24, 2000 – April 24, 2001
Gasoline Hydrotreater Unit (GHU)	December 11, 2000 – June 9, 2001

If you have any questions regarding this report, please contac[Brian Meek at (361) 987-7457.] b(7)(c)

Sincerely,

R. P. Smith
Vice President/General Manager
Formosa Plastics Corporation, Texas

Attachments

EPA/FOIA2018-00801

Formosa Plastics Corporation, Texas
201 Formosa Drive
Point Comfort, Texas 77978

HON SEMIANNUAL EQUIPMENT LEAK REPORT - 40 CFR 63.182 (d)
Process Unit Identification: Vinyl Chloride Monomer Facility
Permit No. 7699/PSD-TX-226M6
Reporting Period: October 24, 2000 - April 24, 2001

	Month						
	October	November	December	January	February	March	April
Valves							
Number Monitored (1) (2) (4)	660	11	0	7177	2	3	6324
Number Leaking	0	0	0	2	0	0	0
Number Not Repaired	0	0	0	0	0	0	0
Percent Leaking	N/A	0.00%	0.00%	0.03%	0.00%	0.00%	0.00%
Flanges and Connectors							
Number Monitored (2) (3)	1660	0	109	124	0	0	0
Number Leaking	0	0	0	0	0	0	0
Number Not Repaired	0	0	0	0	0	0	0
Percent Leaking	0.00%	0.00%	0.00%	0.00%	0.00%	0.00%	0.00%
Pumps							
Number Monitored	5	5	5	5	5	5	5
Number Leaking	0	0	0	0	0	0	0
Number Not Repaired	0	0	0	0	0	0	0
Percent Leaking	0.00%	0.00%	0.00%	0.00%	0.00%	0.00%	0.00%
Compressors							
Number Monitored	3	3	3	3	3	3	3
Number Leaking	0	0	0	0	0	0	0
Number Not Repaired	0	0	0	0	0	0	0
Agitators							
Number Monitored	1	1	1	1	1	1	1
Number Leaking	0	0	0	0	0	0	0
Number Not Repaired	0	0	0	0	0	0	0
Closed-Vent Systems	The annual inspection of the closed-vent systems within the VCM Facility was completed on September 19, 2000 (during the last reporting period).						

Notes:

(1) The total valve count changed from previous to current due to equipment being temporarily or permanently out of service and an updated component count.

(2) Some components were monitored in Q3, but prior to the October 24th reporting period.

(3) Includes connectors Quarterly Dificult to Monitor (QDTM).

(4) Includes valves Difficult to Monitor (DTM) or temporarily out of service (TOS) in November and March.

Explanations for Delay of Repair: N/A for the reporting period.

Dates of Process Unit Shutdowns: See Attached Page

EPA/FOIA2018-00802

Formosa Plastics Corporation, Texas
201 Formosa Drive
Point Comfort, Texas 77978

HON SEMIANNUAL EQUIPMENT LEAK REPORT - 40 CFR 63.182 (d)
Process Unit Identification: Ethylene Dichloride Facility
Permit No. 19199/PSD-TX-760M5
Reporting Period: October 24, 2000 - April 24, 2001

	Month						
	October	November	December	January	February	March	April
Valves							
Number Monitored (1) (4)	1758	13	0	2	1803	2	0
Number Leaking	2	0	0	0	0	0	0
Number Not Repaired	0	0	0	0	0	0	0
Percent Leaking (2)	0.11%	0.00%	0.00%	0.00%	0.00%	0.00%	0.00%
Flanges and Connectors							
Number Monitored (4)	4864	33	0	0	4	0	0
Number Leaking	0	0	0	0	0	0	0
Number Not Repaired	0	0	0	0	0	0	0
Percent Leaking (3)	0.00%	0.00%	0.00%	0.00%	0.00%	0.00%	0.00%
Pumps	All pumps in the EDC Facility are exempt from HON monitoring requirements.						
Compressors	Currently, there are no compressors in VOC service within the EDC Facility.						
Agitators	Currently, there are no agitators within the EDC Facility.						
Closed-Vent Systems	The annual inspection of the closed-vent systems within the EDC Facility was completed on September 19, 2000 (during the last reporting period).						

Notes:
(1) Component count changed due to an updated count.
(2) Percent of valves leaking does not include valves that are nonrepairable or those being remonitored after repair.
(3) Percent of leaking connectors includes those nonrepairable / total.
(4) Valves monitored in January and connectors in Feb include those Temporarily Out of Service.

Explanations for Delay of Repair: N/A

Dates of Process Unit Shutdowns: See Attached Page

EPA/FOIA2018-00803

Date	Equipment	Duration of Downtime
3/20/01	DR-351C Waste Gas Incinerator	10.33 Days
3/21/01	DC-252A Steam Stripper	2.25 Days
3/27/01	DC-252B Steam Stripper	1.33 Days

DATES OF UNIT SHUTDOWNS FOR EG

October 24, 2000 to April 24, 2001

Date	Equipment	Duration of Downtime
12/29/00	Ethylene Glycol Plant-Unplanned Maintenance	12 Days
1/19/01	Ethylene Glycol Plant-Unplanned Maintenance	1.63 Days
3/27/01	Ethylene Glycol Plant-Unplanned Maintenance	1.92 Days
4/16/01	Ethylene Glycol Plant-Unplanned Maintenance	1.5 Days

EPA/FOIA2018-00805

File Name: eg shutdown 7-01.doc

DATES OF UNIT SHUTDOWNS FOR DT-403 / 404 and FTD-02

October 24, 2000 to April 24, 2001

Date	Equipment	Duration of Downtime
N/A	There were no shutdowns during the reporting period.	

EPA/FOIA2018-00806

File Name: mt shutdown 7-01.doc

DATES OF UNIT SHUTDOWNS FOR GHU UNIT

December 11, 2000 to June 9, 2001

Date	Equipment	Duration of Downtime
12/11/01	G616JB – GHU 2nd Stage Recycle Compressor	66 Days

EPA/FOIA2018-00807

File Name: ghu shtdwn 7-01.doc

bcc: Clay Coleman
Jeff Lin 7/20
Sherman Ko
S. C. Cheng 7/20/01
Jay Lo 7/20
John T. Hyak for Steve Marwitz 7/19/01
Steve Marwitz
John T. Hyak 7/19/01
Brian Meek 7/19/01
Central File A. I. 8. b. ___

b5 7(c)

EPA/FOIA2018-00808

7000 1670 0009 4185 4549

CERTIFIED MAIL RECEIPT
(Domestic Mail Only; No Insurance Coverage Provided)

1445 Ross Avenue
Dallas, Texas 75202-2733

Postage	$ 1.03
Certified Fee	2.10
Return Receipt Fee (Endorsement Required)	1.50
Restricted Delivery Fee (Endorsement Required)	
Total Postage & Fees	$ 4.63

Postmark Here

POINT COMFORT TX 77978 JUL 22 2001 USPS

Sent To Mr. Samuel Coleman,P.E.
Street U.S. E.P.A. (MC-6EN)
City, 1445 Ross Avenue, Suite 1200
Dallas, TX. 75202-2733

PS Form 3800, May 2000 See Reverse for Instructions

7000 1670 0009 4185 4525

CERTIFIED MAIL RECEIPT
(Domestic Mail Only; No Insurance Coverage Provided)

P.O. Box 13087
Austin, Texas 78711-3087

Postage	$ 1.03
Certified Fee	2.10
Return Receipt Fee (Endorsement Required)	1.50
Restricted Delivery Fee (Endorsement Required)	
Total Postage & Fees	$ 4.63

Postmark Here

POINT COMFORT TX 77978 JUL 22 2001 USPS

Sent To Mr. Jeff Saitas (MC-169)
Street Executive Director, TNRCC
Attn: Jeanne Philquist, Mgr.
City, S P.O. Box 13087
Austin, TX. 78711-3087

PS Form 3800, May 2000 See Reverse for Instructions

7000 1670 0009 4185 4532

U.S. Postal Service
CERTIFIED MAIL RECEIPT
(Domestic Mail Only; No Insurance Coverage Provided)

6300 Ocean Dr., Suite 1200
Corpus Christi, Tx. 78412

Postage	$ 1.03
Certified Fee	2.10
Return Receipt Fee (Endorsement Required)	1.50
Restricted Delivery Fee (Endorsement Required)	
Total Postage & Fees	$ 4.63

Postmark Here

POINT COMFORT TX 77978 JUL 22 2001 USPS

Sent To Mr. Jim Bowman
Street Air Program Manager, Region 14
TNRCC
City, 6300 Ocean Drive, Suite 1200
Corpus Christi, TX. 78412

PS Form 3800, May 2000 See Reverse for Instructions

EPA/FOIA2018-00809

SENDER: COMPLETE THIS SECTION

- Complete items 1, 2, and 3. Also complete item 4 if Restricted Delivery is desired.
- Print your name and address on the reverse so that we can return the card to you.
- Attach this card to the back of the mailpiece, or on the front if space permits. EHS

1. Article Addressed to:

Mr. Jim Bowman
TNRCC
6300 Ocean Drive, Suite 1200
Corpus Christi, TX 78412

(RH/BM/7-20-01)

COMPLETE THIS SECTION ON DELIVERY

A. Received by (Please Print Clearly): Alexia Abrego
B. Date of Delivery: 7/25/01
C. Signature: X Alexia Abrego ☐ Agent ☐ Addressee
D. Is delivery address different from item 1? ☐ Yes
If YES, enter delivery address below: ☐ No

3. Service Type
☒ Certified Mail ☐ Express Mail
☐ Registered ☐ Return Receipt for Merchandise
☐ Insured Mail ☐ C.O.D.

4. Restricted Delivery? (Extra Fee) ☐ Yes

2. Article Number (Copy from service label)
7000-1670-0009-4185-4532

PS Form 3811, July 1999 Domestic Return Receipt 102595-00-M-0952

SENDER: COMPLETE THIS SECTION

- Complete items 1, 2, and 3. Also complete item 4 if Restricted Delivery is desired.
- Print your name and address on the reverse so that we can return the card to you.
- Attach this card to the back of the mailpiece, or on the front if space permits. EHS

1. Article Addressed to:

Mr. Samuel Coleman, P.E.
Director, Compliance Assurance &
Enforcement Division (MC-6EN)
U.S. EPA, Region 6
1445 Ross Avenue, Suite 1200
Dallas, TX 75202-2733
(RH/BM/7-20-01)

COMPLETE THIS SECTION ON DELIVERY

A. Received by (Please Print Clearly)
B. Date of Delivery
C. Signature: X MICHAEL J. BAUMANN PO[illegible] ☐ Agent ☐ Addressee
D. Is delivery address different from item 1? ☐ Yes
If YES, enter delivery address below: ☐ No
JUL 25 2001

3. Service Type
☒ Certified Mail ☐ Express Mail
☐ Registered ☐ Return Receipt for Merchandise
☐ Insured Mail ☐ C.O.D.

4. Restricted Delivery? (Extra Fee) ☐ Yes

2. Article Number (Copy from service label)
7000-1670-0009-4185-4549

PS Form 3811, July 1999 Domestic Return Receipt 102595-00-M-0952

SENDER: COMPLETE THIS SECTION

- Complete items 1, 2, and 3. Also complete item 4 if Restricted Delivery is desired.
- Print your name and address on the reverse so that we can return the card to you.
- Attach this card to the back of the mailpiece, or on the front if space permits. EHS

1. Article Addressed to:

Mr. Jeff Saitas, Executive Director, TNRCC
ATTN: Ms. Jeanne Philquist, Manager
Enforcement Division, Air Section
(MC-169)
P.O. Box 13087
Austin, TX 78711-3087

(RH/BM/7-20-01)

COMPLETE THIS SECTION ON DELIVERY

A. Received by (Please Print Clearly)
B. Date of Delivery
C. Signature: X DOUG BENNIGHT MAIL AND MESSENGER SERVICE ☐ Agent ☐ Addressee
D. Is delivery address different from item 1? ☐ Yes
If YES, enter delivery address below: ☐ No
JUL 25 2001
STATE PURCHASING AND GENERAL SERVICES COMMISSION

3. Service Type
☒ Certified Mail ☐ Express Mail
☐ Registered ☐ Return Receipt for Merchandise
☐ Insured Mail ☐ C.O.D.

4. Restricted Delivery? (Extra Fee) ☐ Yes

2. Article Number (Copy from service label)
7000-1670-0009-4185-4525

PS Form 3811, July 1999 Domestic Return Receipt 102595-00-M-0952

EPA/FOIA2018-00810

FORMOSA

ISO-9002 CERTIFIED
ISO-14001 CERTIFIED

P. O. BOX 700
201 FORMOSA DRIVE
POINT COMFORT, TEXAS 77978

PHONE: 361/987-7000
FAX: 361/987-2363

FILE

January 16, 2002

Certified Mail: 7001-0320-0001-4550-5124

Mr. Samuel Coleman, P. E.
Director, Compliance Assurance and Enforcement Division (MC-6EN)
U. S. Environmental Protection Agency - Region 6
1445 Ross Avenue, Suite 1200
Dallas, Texas 75202-2733

RE: Formosa Plastics Corporation, Texas
TNRCC Air Quality Account No. CB-0038-Q
Traffic Facility - Permit No. 19871/PSD-TX-760M5
EDC Plant - Permit No. 19199/PSD-TX-760M5
EG Plant - Permit No. 19198/PSD-TX-760M5
VCM Plant - Permit No. 7699/PSD-TX-226M6
GHU Unit within Olefins Plant - Permit No. 19168/PSD-TX-760M5
HON Subpart H – Semiannual Report

Dear Mr. Coleman:

As required by 40 CFR 63.182 (d), Formosa Plastics Corporation, Texas (FPC-TX) is hereby submitting semiannual fugitive emissions leak reports required by Subpart H of the HON. This report addresses the number of valves, pumps, compressors, agitators, and connectors found to be leaking as well as the results of the monitoring conducted during the semiannual periods. The following are the units affected and the reporting period for each:

Vinyl Chloride Monomer Unit (VCM)	April 24, 2001– October 24, 2001
Ethylene Dichloride Plant (EDC)	April 24, 2001– October 24, 2001
Ethylene Glycol Plant (EG)	April 24, 2001– October 24, 2001
Traffic Facility – Tanks DT-403/404 and FT-D02	April 24, 2001– October 24, 2001
Gasoline Hydrotreater Unit (GHU)	June 10, 2001 – December 10, 2001

If you have any questions regarding this report, please contac[Brian Meek at (361) 987-7457.] b7(c)

Sincerely,

R. P. Smith
Vice President/General Manager
Formosa Plastics Corporation, Texas

Attachments

EPA/FOIA2018-00811

A.P. 8-6. 013

Formosa Plastics Corporation, Texas
201 Formosa Drive
Point Comfort, Texas 77978

HON SEMIANNUAL EQUIPMENT LEAK REPORT - 40 CFR 63.182 (d)
Process Unit Identification: Traffic Department Tanks DT 403 and 404 and FT-D02
Permit No. 19871/PSD-TX-760M5
Reporting Period: April 24, 2001 - October 24, 2001

	Month						
	April	May	June	July	August	September	October
Valves							
Number Monitored	0	172	75	0	41	206	0
Number Leaking	0	0	0	0	0	0	0
Number Not Repaired	0	0	0	0	0	0	0
Percent Leaking	0.00%	0.00%	0.00%	0.00%	0.00%	0.00%	0.00%
Flanges and Connectors							
Number Monitored	0	0	144	0	0	144	0
Number Leaking	0	0	0	0	0	0	0
Number Not Repaired	0	0	0	0	0		0
Percent Leaking	0.00%	0.00%	0.00%	0.00%	0.00%	0.00%	0.00%
Pumps	All pumps associated with this tank are exempt from HON monitoring requirements.						
Compressors	Currently, there are no compressors in VOC service within the Traffic Facility.						
Agitators	Currently, there are no agitators within the Traffic Facility.						
Closed-Vent Systems	The annual inspection of the closed-vent systems on the tanks will be completed completed in Q4, 2001.						

Notes: N/A

Explanations for Delay of Repair: N/A for the reporting period.

Dates of Process Unit Shutdowns: See Attached Page

EPA/FOIA2018-00812

Formosa Plastics Corporation, Texas
201 Formosa Drive
Point Comfort, Texas 77978

HON SEMIANNUAL EQUIPMENT LEAK REPORT - 40 CFR 63.182 (d)
Process Unit Identification: Ethylene Dichloride Facility
Permit No. 19199/PSD-TX-760M5
Reporting Period: April 24, 2001 - October 24, 2001

	Month						
	April	May	June	July	August	September	October
Valves							
Number Monitored (1)	0	1795	13	0	413	1393	0
Number Leaking	0	0	0	0	0	1	0
Number Not Repaired	0	0	0	0	0	0	0
Percent Leaking (2)	0.00%	0.00%	0.00%	0.00%	0.00%	0.06%	0.00%
Flanges and Connectors							
Number Monitored (4)	0	0	0	0	4	0	0
Number Leaking	0	0	0	0	0	0	0
Number Not Repaired	0	0	0	0	0	0	0
Percent Leaking (3)	0.00%	0.00%	0.00%	0.00%	0.00%	0.00%	0.00%
Pumps	All pumps in the EDC Facility are exempt from HON monitoring requirements.						
Compressors	Currently, there are no compressors in VOC service within the EDC Facility.						
Agitators	Currently, there are no agitators within the EDC Facility.						
Closed-Vent Systems	The annual inspection of the closed-vent systems within the EDC Facility was completed on June 6, 2001.						

Notes:

(1) Component count changed due to an updated count. Includes several out of service in May.

(2) Percent of valves leaking does not include valves that are nonrepairable or those being remonitored after repair.

(3) Percent of leaking connectors includes those nonrepairable / total.

Explanations for Delay of Repair: N/A

Dates of Process Unit Shutdowns: See Attached Page

EPA/FOIA2018-00813

EHS - Air Section

File Name: edc sbpt h 1-02.xls

Dates of Unit Shutdowns for EDC

April 24, 2001 to October 24, 2001

Date	Equipment Number	Duration of Downtime	
08/23/01	DC-351B Absorber	1 day	12 hours
08/23/01	DR-351B Incinerator	2 days	
09/09/01	DC-105 HCl Stripping Column	1 day	
09/23/01	DC-102 Light Ends Column	1 day	22 hours
09/23/01	DC-103 Heavy Ends Column	2 days	23 hours
09/23/01	DC-105 HCl Stripping Column	2 days	23 hours
09/23/01	DR-101C EDC Reactor	14 days	14 hours
09/23/01	DT-101A Water Wash Decanter	5 days	2 hours
09/23/01	DT-102A Caustic Wash Decanter	5 days	2 hours
09/24/01	DB-302B Dry Waste Gas Booster	1 day	16 hours
09/24/01	DC-104 EDC Recovery Column	7 days	19 hours
09/24/01	DS-302 Dry Waste Gas Separator	1 day	16 hours
09/24/01	DV-101 Dry Crude EDC Buffer Tank	12 days	12 hours
09/24/01	DV-302 Dry Waste Gas Buffer Tank	1 day	16 hours
09/25/01	DR-351C Incinerator	10 days	20 hours
09/26/01	DC-351C Absorber	10 days	7 hours
09/26/01	DC-352C Scrubber	4 days	18 hours
09/29/01	DT-101B Water Wash Decanter	10 days	12 hours
09/29/01	DT-102B Caustic Wash Decanter	10 days	12 hours
09/30/01	DR-101A EDC Reactor	3 days	
09/30/01	DS-101A Reactor Vent Gas Demister	2 days	17 hours
10/01/01	DR-101B EDC Reactor	2 days	
10/01/01	DS-101B Reactor Vent Gas Demister	3 days	
10/01/01	DT-101A Water Wash Decanter	1 day	
10/01/01	DT-102A Caustic Wash Decanter	1 day	
10/09/01	DC-104 EDC Recovery Column	1 day	19 hours

EPA/FOIA2018-00814

File Name: edc shutdown 1-02.xls

DATES OF UNIT SHUTDOWNS FOR EG

April 24, 2001 to October 24, 2001

Date	Equipment	Duration of Downtime
7/18/01	Ethylene Glycol Plant	24 Days
8/24/01	GI-910A Waste Gas Incinerator	1.41 Days

EPA/FOIA2018-00815

File Name: eg shutdown 1-02.doc

DATES OF UNIT SHUTDOWNS FOR GHU UNIT

June 10, 2001 to December 10, 2001

Date	Equipment	Duration of Downtime
06/24/01	Hydrogen Compressor	48 hours
06/24/01	Second Stage Reaction System and associated equipment	5 days and 12 hours
06/24/01	Depentanizer and associated equipment	5 days and 12 hours
06/24/01	Deoctanizer and associated equipment	5 days and 12 hours
06/24/01	BTX Stripper and associated equipment	5 days and 12 hours
06/24/01	Rerun Tower and associated equipment	5 days and 12 hours
06/24/01	First Stage Reaction System and associated equipment	5 days and 12 hours
06/28/01	Hydrogen Compressor	1 day and 12 hours
07/02/01	Second Stage Reaction System and associated equipment	24 hours
07/30/01	Rerun Tower and associated equipment	4 days
09/15/01	Deoctanizer and associated equipment	20 days
09/15/01	Depentanizer and associated equipment	20 days
09/15/01	Second Stage Reaction System and associated equipment	30 days

EPA/FOIA2018-00816

File Name: ghu shtdwn 1-02.doc

Formcsa Plastics Corporation, Texas
201 Formosa Drive
Point Comfort, Texas 77978

HON SEMIANNUAL EQUIPMENT LEAK REPORT - 40 CFR 63.182 (d)
Process Unit Identification: Vinyl Chloride Monomer Facility
Permit No. 7699/PSD-TX-226M6
Reporting Period: April 24, 2001 - October 24, 2001

	Month						
	April	May	June	July	August	September	October
Valves							
Number Monitored (1) (2) (3)	1417	412	60	7168	1	0	7142
Number Leaking	0	0	0	0	0	0	1
Number Not Repaired	0	0	0	0	0	0	0
Percent Leaking	0.00%	0.00%	0.00%	0.00%	0.00%	0.00%	0.01%
Flanges and Connectors							
Number Monitored (3)	0	20	71	0	0	0	20036
Number Leaking	0	0	0	0	0	0	0
Number Not Repaired	0	0	0	0	0	0	0
Percent Leaking	0.00%	0.00%	0.00%	0.00%	0.00%	0.00%	0.00%
Pumps							
Number Monitored	5	5	5	5	5	5	5
Number Leaking	0	0	0	0	0	0	0
Number Not Repaired	0	0	0	0	0	0	0
Percent Leaking	0.00%	0.00%	0.00%	0.00%	0.00%	0.00%	0.00%
Compressors							
Number Monitored	3	3	3	3	3	3	3
Number Leaking	0	0	0	0	0	0	0
Number Not Repaired	0	0	0	0	0	0	0
Agitators							
Number Monitored	1	1	1	1	1	1	1
Number Leaking	0	0	0	0	0	0	0
Number Not Repaired	0	0	0	0	0	0	0
Closed-Vent Systems	The annual inspection of the closed-vent systems within the VCM Facility will be completed in Q4, 2001.						

Notes:

(1) The total valve count changed from previous to current due to equipment being temporarily or permanently out of service and an updated component count.

(2) Some components were monitored in Q2, but prior to the April 24th reporting period.

(3) Includes components Quarterly Difficult to Monitor (QDTM) and Annually Difficult to Monitor (DTM).

Explanations for Delay of Repair: N/A for the reporting period.

Dates of Process Unit Shutdowns: See Attached Page

EPA/FOIA2018-00817

bcc:
Clay Coleman
Jeff Lin
Sherman Ko 1/18/02
S. C. Cheng 1/18/02
Jay Lo
Steve Marwitz
John T. Hyak 01/17/02
Brian Meek 1/16/02
Central File A. I. 8. b. ___

b&7(c)

EPA/FOIA2018-00818

SENDER: COMPLETE THIS SECTION

- Complete items 1, 2, and 3. Also complete item 4 if Restricted Delivery is desired.
- Print your name and address on the reverse so that we can return the card to you. EHS
- Attach this card to the back of the mailpiece, or on the front if space permits. Twyla / Bm

1. Article Addressed to:

Mr. Samuel Coleman, P.E.
U.S. EPA (MC-6EN)
1445 Ross Avenue, Suite 1200
Dallas, Texas 75202-2733

COMPLETE THIS SECTION ON DELIVERY

A. Signature
X MIKE BAUMANN
☐ Agent
☐ Addressee

B. Received by (Printed Name) | C. Date of Delivery

D. Is delivery address different from item 1? ☐ Yes
If YES, enter delivery address below: ☐ No

JAN 24 2002

3. Service Type
☑ Certified Mail ☐ Express Mail
☐ Registered ☐ Return Receipt for Merchandise
☐ Insured Mail ☐ C.O.D.

4. Restricted Delivery? (Extra Fee) ☐ Yes

2. Article Number (Transfer from service label) 7001 0320 0001 4550 5124

PS Form 3811, August 2001 Domestic Return Receipt 102595-01-M-2509

SENDER: COMPLETE THIS SECTION

- Complete items 1, 2, and 3. Also complete item 4 if Restricted Delivery is desired.
- Print your name and address on the reverse so that we can return the card to you. EHS
- Attach this card to the back of the mailpiece, or on the front if space permits. Bm

1. Article Addressed to:

Mr. Jim Bowman
Air Program Manager, Region 14
TNRCC – Natural Resource Center
6300 Ocean Drive, Suite 1200
Corpus Christi, Texas 78412

COMPLETE THIS SECTION ON DELIVERY

A. Signature
X E. Donnell
☐ Agent
☐ Addressee

B. Received by (Printed Name) E. Donnell | C. Date of Delivery 01/28/02

D. Is delivery address different from item 1? ☐ Yes
If YES, enter delivery address below: ☐ No

3. Service Type
☑ Certified Mail ☐ Express Mail
☐ Registered ☐ Return Receipt for Merchandise
☐ Insured Mail ☐ C.O.D.

4. Restricted Delivery? (Extra Fee) ☐ Yes

2. Article Number (Transfer from service label) 7001 0320 0001 4550 5117

PS Form 3811, August 2001 Domestic Return Receipt 102595-01-M-2509

SENDER: COMPLETE THIS SECTION

- Complete items 1, 2, and 3. Also complete item 4 if Restricted Delivery is desired.
- Print your name and address on the reverse so that we can return the card to you. EHS
- Attach this card to the back of the mailpiece, or on the front if space permits. Bm

1. Article Addressed to:

Mr. Jeff Saitas, Executive Director
Texas Natural Resource Conservation Commission (TNRCC)
Attn: Ms. Jeanne Philquist, Manager (MC-169)
Enforcement Division, Air Section
P.O. Box 13087
Austin, Texas 78711-3087

COMPLETE THIS SECTION ON DELIVERY

A. Signature
X
☐ Agent
☐ Addressee

B. Received by (Printed Name) | C. Date of Delivery
DOUG BENNETT
MAIL & MESSENGER SERVICE
JAN 28 2002

D. Is delivery address different from item 1? ☐ Yes
If YES, enter delivery address below: ☐ No

TBPC

Service Type
☑ Certified Mail ☐ Express Mail
☐ Registered ☐ Return Receipt for Merchandise
☐ Insured Mail ☐ C.O.D.

4. Restricted Delivery? (Extra Fee) ☐ Yes

2. Article Number (Transfer from service label) 7001 0320 0001 4550 5100

PS Form 3811, August 2001 Domestic Return Receipt 102595-01-M-2509

EPA/FOIA2018-00819

7001 0320 0001 4550 5124

U.S. Postal Service
CERTIFIED MAIL RECEIPT
(Domestic Mail Only; No Insurance Coverage Provided)

OFFICIAL USE

Postage	$ 1.03
Certified Fee	2.10
Return Receipt Fee (Endorsement Required)	1.50
Restricted Delivery Fee (Endorsement Required)	
Total Postage & Fees	$ 4.63

POINT COMFORT TX 77978 Postmark JAN 22 2002 USPS

Sent To
Street, Apt. No.; or PO Box No. 1445 Ross Avenue
City, State, ZIP+4 Dallas, Texas 75202-2733

PS Form 3800 January 2001 See Reverse for Instructions

7001 0320 0001 4550 5117

U.S. Postal Service
CERTIFIED MAIL RECEIPT
(Domestic Mail Only; No Insurance Coverage Provided)

OFFICIAL USE

Postage	$ 1.03
Certified Fee	2.10
Return Receipt Fee (Endorsement Required)	1.50
Restricted Delivery Fee (Endorsement Required)	
Total Postage & Fees	$ 4.63

POINT COMFORT TX 77978 Postmark Here JAN 22 2002 USPS

Sent To
Street, Apt. No.; or PO Box No. 6300 Ocean Dr., Suite 1900
City, State, ZIP+4 Corpus Christi, Tx. 78412

PS Form 3800 January 2001 See Reverse for Instructions

7001 0320 0001 4550 5100

U.S. Postal Service
CERTIFIED MAIL RECEIPT
(Domestic Mail Only; No Insurance Coverage Provided)

OFFICIAL USE

Postage	$ 1.03
Certified Fee	2.10
Return Receipt Fee (Endorsement Required)	1.50
Restricted Delivery Fee (Endorsement Required)	
Total Postage & Fees	$ 4.63

POINT COMFORT JAN 22 2002 USPS

Sent To
Street, Apt. No.; or PO Box No. P.O. Box 13087
City, State, ZIP+4 Austin, Texas 78711-3087

PS Form 3800 January 2001 See Reverse for Instructions

EPA/FOIA2018-00820

FORMOSA PLASTICS CORPORATION, TEXAS

ISO-9002 CERTIFIED
ISO-14001 CERTIFIED

P. O. BOX 700
201 FORMOSA DRIVE
POINT COMFORT, TEXAS 77978

PHONE: 361/987-7000
FAX: 361/987-2363

FILE

July 19, 2002

Certified Mail: 7001-2510-0008-0641-7709

Mr. Samuel Coleman, P. E.
Director, Compliance Assurance and Enforcement Division (MC-6EN)
U. S. Environmental Protection Agency - Region 6
1445 Ross Avenue, Suite 1200
Dallas, Texas 75202-2733

RE: Formosa Plastics Corporation, Texas
TNRCC Air Quality Account No. CB-0038-Q
Traffic Facility - Permit No. 19871/PSD-TX-760M5
EDC Plant - Permit No. 19199/PSD-TX-760M5
EG Plant - Permit No. 19198/PSD-TX-760M5
VCM Plant - Permit No. 7699/PSD-TX-226M6
GHU Unit within Olefins Plant - Permit No. 19168/PSD-TX-760M5
HON Subpart H – Semiannual Report

Dear Mr. Coleman:

As required by 40 CFR 63.182 (d), Formosa Plastics Corporation, Texas (FPC-TX) is hereby submitting semiannual fugitive emissions leak reports required by Subpart H of the HON. This report addresses the number of valves, pumps, compressors, agitators, and connectors found to be leaking as well as the results of the monitoring conducted during the semiannual periods. The following are the units affected and the reporting period for each:

Vinyl Chloride Monomer Unit (VCM)	October 24, 2001– April 24, 2002
Ethylene Dichloride Plant (EDC)	October 24, 2001– April 24, 2002
Ethylene Glycol Plant (EG)	October 24, 2001– April 24, 2002
Traffic Facility – Tanks DT-403/404 and FT-D02	October 24, 2001– April 24, 2002
Gasoline Hydrotreater Unit (GHU)	December 11, 2001 – June 9, 2002

If you have any questions regarding this report, please contact [Brian Meek at (361) 987-7457.] b&7(c)

Sincerely,

R. P. Smith
Vice President/General Manager
Formosa Plastics Corporation, Texas

Attachments

014

EPA/FOIA2018-00821

A.I.8.b

Formosa Plastics Corporation, Texas
201 Formosa Drive
Point Comfort, Texas 77978

HON SEMIANNUAL EQUIPMENT LEAK REPORT - 40 CFR 63.182 (d)
Process Unit Identification: Vinyl Chloride Monomer Facility
Permit No. 7699/PSD-TX-226M6
Reporting Period: October 24, 2001 - April 24, 2002

	Month						
	October	November	December	January	February	March	April
Valves							
Number Monitored (1) (2) (3)	624	3	0	7132	0	0	7059
Number Leaking	0	0	0	0	0	0	2
Number Not Repaired	0	0	0	0	0	0	0
Percent Leaking	0.00%	0.00%	0.00%	0.00%	0.00%	0.00%	0.03%
Flanges and Connectors							
Number Monitored (2) (3)	1773	0	0	124	0	0	4
Number Leaking	0	0	0	0	0	0	0
Number Not Repaired	0	0	0	0	0	0	0
Percent Leaking	0.00%	0.00%	0.00%	0.00%	0.00%	0.00%	0.00%
Pumps							
Number Monitored	5	5	5	5	5	5	0
Number Leaking	0	0	0	0	0	0	0
Number Not Repaired	0	0	0	0	0	0	0
Percent Leaking	0.00%	0.00%	0.00%	0.00%	0.00%	0.00%	0.00%
Compressors							
Number Monitored (2)	0	3	3	3	3	3	0
Number Leaking	0	0	0	0	0	0	0
Number Not Repaired	0	0	0	0	0	0	0
Agitators							
Number Monitored	1	1	1	1	1	1	1
Number Leaking	0	0	0	0	0	0	0
Number Not Repaired	0	0	0	0	0	0	0
Closed-Vent Systems	The annual inspection of the closed-vent systems within the VCM Facility will be completed in Q3, 2002.						

Notes:

(1) The total valve count changed from previous to current due to equipment being temporarily or permanently out of service and an updated component count.

(2) Some components were monitored in Q4, but prior to the October 24th reporting period.

(3) Includes components Quarterly Difficult to Monitor (QDTM).

Explanations for Delay of Repair: N/A for the reporting period.

Dates of Process Unit Shutdowns: See Attached Page

EPA/FOIA2018-00822

EHS - Air Section

File Name: vcm sbpt h 7-02.xls

Formosa Plastics Corporation, Texas
201 Formosa Drive
Point Comfort, Texas 77978

HON SEMIANNUAL EQUIPMENT LEAK REPORT - 40 CFR 63.182 (d)
Process Unit Identification: Ethylene Dichloride Facility
Permit No. 19199/PSD-TX-760M5
Reporting Period: October 24, 2001 - April 24, 2002

	Month						
	October	November	December	January	February	March	April
Valves							
Number Monitored (1)	1	1848	3	0	1807	2	0
Number Leaking	0	2	0	0	2	0	0
Number Not Repaired	0	0	0	0	0	0	0
Percent Leaking (2)	0.00%	0.11%	0.00%	0.00%	0.11%	0.00%	0.00%
Flanges and Connectors							
Number Monitored	0	4993	0	0	0	0	0
Number Leaking	0	1	0	0	0	0	0
Number Not Repaired	0	0	0	0	0	0	0
Percent Leaking (3)	0.00%	0.02%	0.00%	0.00%	0.00%	0.00%	0.00%
Pumps	All pumps in the EDC Facility are exempt from HON monitoring requirements.						
Compressors	All compressors in the EDC Facility are exempt from HON monitoring requirements.						
Agitators	Currently, there are no agitators within the EDC Facility.						
Closed-Vent Systems	The annual inspection of the closed-vent systems within the EDC Facility will be completed in Q3, 2002.						

Notes:
(1) Component count changed due to an updated count. Includes several out of service in May.
(2) Percent of valves leaking does not include valves that are nonrepairable or those being remonitored after repair.
(3) Percent of leaking connectors includes those nonrepairable / total.

Explanations for Delay of Repair: N/A

Dates of Process Unit Shutdowns: See Attached Page

EPA/FOIA2018-00823

Formosa Plastics Corporation, Texas
201 Formosa Drive
Point Comfort, Texas 77978

HON SEMIANNUAL EQUIPMENT LEAK REPORT - 40 CFR 63.182 (d)
Process Unit Identification: Ethylene Glycol Facility
Permit No. 19198/PSD-TX-760M5
Reporting Period: October 24, 2001 - April 24, 2002

	Month						
	October	November	December	January	February	March	April
Valves							
Number Monitored (1)	0	2366	4	0	2317	2	0
Number Leaking	0	2	0	0	2	2	0
Number Not Repaired	0	0	0	0	0	0	0
Percent Leaking (2)	0.00%	0.08%	0.00%	0.00%	0.09%	0.00%	0.00%
Flanges and Connectors							
Number Monitored	0	5236	2	0	0	0	0
Number Leaking	0	0	0	0	0	0	0
Number Not Repaired	0	0	0	0	0	0	0
Percent Leaking	0.00%	0.00%	0.00%	0.00%	0.00%	0.00%	0.00%
Pumps	All pumps in the EG Facility are exempt from HON monitoring requirements.						
Compressors	All compressors in the EG Facility are exempt from HON monitoring requirements.						
Agitators	Currently, there are no agitators within the EG Facility.						
Closed-Vent Systems	The annual inspection of the closed-vent systems within the EG Facility will be performed during Q3, 2002.						

Notes:

(1) Component count changed due to an updated valve count.

(2) Percent of valves leaking does not include valves that are nonrepairable or those being remonitored after repair.

Explanations for Delay of Repair: N/A for the reporting period.

Dates of Process Unit Shutdowns: See Attached Page

EPA/FOIA2018-00824

EHS - Air Section

File Name: eg sbpt h 7-02.xls

Formosa Plastics Corporation, Texas
201 Formosa Drive
Point Comfort, Texas 77978

HON SEMIANNUAL EQUIPMENT LEAK REPORT - 40 CFR 63.182 (d)
Process Unit Identification: Traffic Department Tanks DT 403 and 404 and FT-D02
Permit No. 19871/PSD-TX-760M5
Reporting Period: October 24, 2001 - April 24, 2002

	Month						
	October	November	December	January	February	March	April
Valves							
Number Monitored	0	174	75	0	174	75	0
Number Leaking	0	0	0	0	0	0	0
Number Not Repaired	0	0	0	0	0	0	0
Percent Leaking	0.00%	0.00%	0.00%	0.00%	0.00%	0.00%	0.00%
Flanges and Connectors							
Number Monitored	0	350	144	0	0	144	0
Number Leaking	0	0	0	0	0	0	0
Number Not Repaired	0	0	0	0	0	0	0
Percent Leaking	0.00%	0.00%	0.00%	0.00%	0.00%	0.00%	0.00%
Pumps	All pumps associated with these tanks are exempt from HON monitoring requirements.						
Compressors	Currently, there are no compressors in VOC service within the Traffic Facility.						
Agitators	Currently, there are no agitators within the Traffic Facility.						
Closed-Vent Systems	The annual inspection of the closed-vent systems on the tanks will be performed in Q3, 2002.						

Notes: N/A

Explanations for Delay of Repair: N/A for the reporting period.

Dates of Process Unit Shutdowns: See Attached Page

EPA/FOIA2018-00825

EHS - Air Section

File Name: mi sbpt h 7-02.xls

Formosa Plastics Corporation, Texas
201 Formosa Drive
Point Comfort, Texas 77978

HON SEMIANNUAL EQUIPMENT LEAK REPORT - 40 CFR 63.182 (d)
Process Unit Identification: Gasoline Hydrotreater Unit
Permit No. 19168/PSD-TX-760M5
Reporting Period: December 11, 2001 - June 9, 2002

	Month						
	Dec	Jan	Feb	Mar	Apr	May	June
Valves							
Number Monitored (1)	8	9	0	2424	10	2	1
Number Leaking	0	0	0	10	2	1	0
Number Not Repaired	0	0	0	0	0	0	0
Percent Leaking (2)	0.00%	0.00%	0.00%	0.41%	0.00%	0.00%	0.00%
Flanges							
Number Monitored	2	0	0	2348	0	0	0
Number Leaking	0	0	0	0	0	0	0
Number Not Repaired-	0	0	0	0	0	0	0
Percent Leaking (3)	0.00%	0.00%	0.00%	0.00%	0.00%	0.00%	0.00%
Connectors							
Number Monitored	1	0	0	2	0	0	0
Number Leaking	0	0	0	0	0	0	0
Number Not Repaired	0	0	0	0	0	0	0
Percent Leaking	0.00%	0.00%	0.00%	0.00%	0.00%	0.00%	0.00%
Pumps	All pumps in the GHU are exempt from HON monitoring requirements.						
Compressors	All compressors in the GHU are exempt from HON monitoring requirements.						
Agitators	All agitators in the GHU are exempt from HON monitoring requirements.						
Closed-Vent Systems	The annual inspection of the closed-vent systems within the GHU Facility will be completed in Q3, 2002.						

Notes:
(1) Valve count changed from previous report due to an updated valve count.
(2) Percent of valves leaking does not include valves that are nonrepairable or those being remonitored after repair.
(3) Percent of leaking flanges (connectors) includes those nonrepairable / total.

Explanations for Delay of Repair: N/A for the reporting period.

Dates of Process Unit Shutdowns: See Attached Page

EPA/FOIA2018-00826

bcc:

Clay Coleman	VCM
Jeff Lin	Traffic
Sherman Ko	EG
S. C. Cheng	EDC
Jay Lo	Olefins I
Steve Marwitz	7/19
John T. Hyak	07/19/02
Brian Meek	7/18/02
Central File A. I. 8. b. ___	

b&7(c)

EPA/FOIA2018-00827

---

bcc:

Clay Coleman	VCM
Jeff Lin	Traffic
Sherman Ko	EG Amanda Lang for Sherman Ko
S. C. Cheng	EDC
Jay Lo	Olefins I
Steve Marwitz	
John T. Hyak	
Brian Meek	
Central File A. I. 8. b. ___	

b&7(c)

EPA/FOIA2018-00828

HON Subpart H Semiannual Report
July 19, 2002
Page 3

---

bcc:

Clay Coleman	VCM 7/18/02.
Jeff Lin	Traffic
Sherman Ko	EG
S. C. Cheng	EDC
Jay Lo	Olefins I
Steve Marwitz	
John T. Hyak	
Brian Meek	
Central File A. I. 8. b. ___	

b7(c)

EPA/FOIA2018-00829

7001 2510 0008 0641 7686

CERTIFIED MAIL RECEIPT
(Domestic Mail Only; No Insurance Coverage Provided)

OFFICIAL USE

Postage	$ .83
Certified Fee	2.30
Return Receipt Fee (Endorsement Required)	1.75
Restricted Delivery Fee (Endorsement Required)	
Total Postage & Fees	$ 4.88

POINT COMFORT TX 77978 USPS Postmark Here JUL 22 2002

Sent To
Street, Apt. No.; or PO Box No. *P.O. Box 13087*
City, State, ZIP+4 *Austin, Texas 78711-3087*

PS Form 3800, January 2001 See Reverse for Instructions

7001 2510 0008 0641 7693

U.S. Postal Service
CERTIFIED MAIL RECEIPT
(Domestic Mail Only; No Insurance Coverage Provided)

OFFICIAL USE

Postage	$ .83
Certified Fee	2.30
Return Receipt Fee (Endorsement Required)	1.75
Restricted Delivery Fee (Endorsement Required)	
Total Postage & Fees	$ 4.88

POINT COMFORT TX 77978 USPS Postmark Here JUL 22 2002

Sent To
Street, Apt. No.; or PO Box No. *6300 Ocean Drive - Suite 1200*
City, State, ZIP+4 *Corpus Christi, Texas 78412*

PS Form 3800, January 2001 See Reverse for Instructions

7001 2510 0008 0641 7709

U.S. Postal Service
CERTIFIED MAIL RECEIPT
(Domestic Mail Only; No Insurance Coverage Provided)

Postage	$ .83
Certified Fee	2.30
Return Receipt Fee (Endorsement Required)	1.75
Restricted Delivery Fee (Endorsement Required)	
Total Postage & Fees	$ 4.88

POINT COMFORT TX 77978 USPS Postmark Here JUL 22 2002

Sent To
Street, Apt. No.; or PO Box No. *1445 Ross Avenue*
City, State, ZIP+4 *Dallas, Texas 75202-2733*

PS Form 3800, January 2001 See Reverse for Instructions

EPA/FOIA2018-00830

ENDER: COMPLETE THIS SECTION

Complete items 1, 2, and 3. Also complete item 4 if Restricted Delivery is desired.
Print your name and address on the reverse so that we can return the card to you.
Attach this card to the back of the mailpiece, or on the front if space permits. EHS-BM

Article Addressed to:

. Jeff Saitas, Executive Director
xas Natural Resource Conservation Commission (TNRCC
n: Ms. Jeanne Philquist, Manager (MC-169)
forcement Division, Air Section
). Box 13087
stin, Texas 78711-3087

COMPLETE THIS SECTION ON DELIVERY

A. Signature
X DOUG BENNIGHT MAIL & MESSENGER SERVICE ☐ Agent ☐ Addressee

B. Received by (Printed Name) | C. Date of Delivery
JUL 24 2002

D. Is delivery address different from item 1? ☐ Yes
If YES, enter delivery address below: ☐ No
TBPC

. Service Type
☐ Certified Mail ☐ Express Mail
☐ Registered ☐ Return Receipt for Merchandise
☐ Insured Mail ☐ C.O.D.

4. Restricted Delivery? (Extra Fee) ☐ Yes

Article Number (Transfer from service label) 7001 2510 0008 0641 7686

S Form 3811, August 2001 Domestic Return Receipt 102595-01-M-0381

ENDER: COMPLETE THIS SECTION

Complete items 1, 2, and 3. Also complete item 4 if Restricted Delivery is desired.
Print your name and address on the reverse so that we can return the card to you.
Attach this card to the back of the mailpiece, or on the front if space permits. EHS-BM

Article Addressed to:

Mr. Jim Bowman
Air Program Manager, Region 14
TNRCC – Natural Resource Center
6300 Ocean Drive, Suite 1200
Corpus Christi, Texas 78412

COMPLETE THIS SECTION ON DELIVERY

A. Signature
X Dana Alvarado ☐ Agent ☐ Addressee

B. Received by (Printed Name) | C. Date of Delivery
7/25/02

D. Is delivery address different from item 1? ☐ Yes
If YES, enter delivery address below: ☐ No

3. Service Type
☐ Certified Mail ☐ Express Mail
☐ Registered ☐ Return Receipt for Merchandise
☐ Insured Mail ☐ C.O.D.

4. Restricted Delivery? (Extra Fee) ☐ Yes

Article Number (Transfer from service label) 7001 2510 0008 0641 7693

S Form 3811, August 2001 Domestic Return Receipt 102595-01-M-0381

ENDER: COMPLETE THIS SECTION

Complete items 1, 2, and 3. Also complete item 4 if Restricted Delivery is desired.
Print your name and address on the reverse so that we can return the card to you.
Attach this card to the back of the mailpiece, or on the front if space permits. EHS-BM

Article Addressed to:

Mr. Samuel Coleman, P.E.
U.S. EPA (MC-6EN)
1445 Ross Avenue, Suite 1200
Dallas, Texas 75202-2733

COMPLETE THIS SECTION ON DELIVERY

A. Signature
X ☐ Agent ☐ Addressee

B. Received by (Printed Name) | C. Date of Delivery

D. Is delivery address different from item 1? ☐ Yes
If YES, enter delivery address below: ☐ No

JUL 2 2002

3. Service Type
☐ Certified Mail ☐ Express Mail
☐ Registered ☐ Return Receipt for Merchandise
☐ Insured Mail ☐ C.O.D.

4. Restricted Delivery? (Extra Fee) ☐ Yes

Article Number (Transfer from service label) 7001 2510 0008 0641 7709

S Form 3811, August 2001 Domestic Return Receipt 102595-01-M-0381

EPA/FOIA2018-00831

FORMOSA PLASTICS CORPORATION, TEXAS

ISO-9002 CERTIFIED
ISO-14001 CERTIFIED

P. O. BOX 700
201 FORMOSA DRIVE
POINT COMFORT, TEXAS 77978

PHONE: 361/987-7000
FAX: 361/987-2363

FILE

January 21, 2003

Certified Mail: 7001-2510-0008-0641-1479

Mr. Samuel Coleman, P. E.
Director, Compliance Assurance and Enforcement Division (MC-6EN)
U. S. Environmental Protection Agency - Region 6
1445 Ross Avenue, Suite 1200
Dallas, Texas 75202-2733

RE: Formosa Plastics Corporation, Texas
TNRCC Air Quality Account No. CB-0038-Q
Traffic Facility - Permit No. 19871/PSD-TX-760M5
EDC Plant - Permit No. 19199/PSD-TX-760M5
EG Plant - Permit No. 19198/PSD-TX-760M5
VCM Plant - Permit No. 7699/PSD-TX-226M6
GHU Unit within Olefins Plant - Permit No. 19168/PSD-TX-760M5
HON Subpart H – Semiannual Report

Dear Mr. Coleman:

As required by 40 CFR 63.182 (d), Formosa Plastics Corporation, Texas (FPC-TX) is hereby submitting semiannual fugitive emissions leak reports required by Subpart H of the HON. This report addresses the number of valves, pumps, compressors, agitators, and connectors found to be leaking as well as the results of the monitoring conducted during the semiannual periods. The following are the units affected and the reporting period for each:

Vinyl Chloride Monomer Unit (VCM)	April 24, 2002– October 24, 2002
Ethylene Dichloride Plant (EDC)	April 24, 2002– October 24, 2002
Ethylene Glycol Plant (EG)	April 24, 2002– October 24, 2002
Traffic Facility – Tanks DT-403/404 and FT-D02	April 24, 2002– October 24, 2002
Gasoline Hydrotreater Unit (GHU)	June 10, 2002 – December 10, 2002

If you have any questions regarding this report, please contact [Brian Meek at (361) 987-7457.] b(7)(c)

Sincerely,

R. P. Smith
Vice President/General Manager
Formosa Plastics Corporation, Texas

Attachments

EPA/FOIA2018-00832

A.I.5.b. 015

Formosa Plastics Corporation, Texas
201 Formosa Drive
Point Comfort, Texas 77978

HON SEMIANNUAL EQUIPMENT LEAK REPORT - 40 CFR 63.182 (d)
Process Unit Identification: Vinyl Chloride Monomer Facility
Permit No. 7699/PSD-TX-226M6
Reporting Period: April 24, 2002 - October 24, 2002

	Month						
	April	May	June	July	August	September	October
Valves							
Number Monitored (1) (2) (3)	1992	2	0	6918	0	0	3195
Number Leaking	1	0	0	0	0	0	0
Number Not Repaired	0	0	0	0	0	0	0
Percent Leaking	0.05%	0.00%	0.00%	0.00%	0.00%	0.00%	0.00%
Flanges and Connectors							
Number Monitored (2) (3)	4	0	0	0	0	0	3711
Number Leaking	0	0	0	0	0	0	0
Number Not Repaired	0	0	0	0	0	0	0
Percent Leaking	0.00%	0.00%	0.00%	0.00%	0.00%	0.00%	0.00%
Pumps							
Number Monitored	5	5	5	5	5	5	0
Number Leaking	0	0	0	0	0	0	0
Number Not Repaired	0	0	0	0	0	0	0
Percent Leaking	0.00%	0.00%	0.00%	0.00%	0.00%	0.00%	0.00%
Compressors							
Number Monitored (2)	3	3	3	3	3	3	0
Number Leaking	0	0	0	0	0	0	0
Number Not Repaired	0	0	0	0	0	0	0
Agitators							
Number Monitored	1	1	1	1	1	1	0
Number Leaking	0	0	0	0	0	0	0
Number Not Repaired	0	0	0	0	0	0	0
Closed-Vent Systems	The annual inspection of the closed-vent systems within the VCM Facility was completed in Q4, 2002.						

Notes:

(1) The total valve count changed from previous to current due to equipment being temporarily or permanently out of service and an updated component count.

(2) Additional components were monitored in Q4, but after the October 24th reporting period. Similarly, valves in April.

(3) Includes components Quarterly Difficult to Monitor (QDTM).

Explanations for Delay of Repair: N/A for the reporting period.

Dates of Process Unit Shutdowns: See Attached Page

EPA/FOIA2018-00833

EHS - Air Section

File Name: vcm sbpt h 1-03.xls

Formosa Plastics Corporation, Texas
201 Formosa Drive
Point Comfort, Texas 77978

HON SEMIANNUAL EQUIPMENT LEAK REPORT - 40 CFR 63.182 (d)
Process Unit Identification: Ethylene Glycol Facility
Permit No. 19198/PSD-TX-760M5
Reporting Period: April 24, 2002 - October 24, 2002

	Month						
	April	May	June	July	August	September	October
Valves							
Number Monitored (1)	2	2214	116	1	2256	85	0
Number Leaking	0	3	1	0	0	0	0
Number Not Repaired	0	0	0	0	0	0	0
Percent Leaking (2)	0.00%	0.13%	0.04%	0.00%	0.00%	0.00%	0.00%
Flanges and Connectors							
Number Monitored	0	0	0	0	0	0	0
Number Leaking	0	0	0	0	0	0	0
Number Not Repaired	0	0	0	0	0	0	0
Percent Leaking	0.00%	0.00%	0.00%	0.00%	0.00%	0.00%	0.00%
Pumps	All pumps in the EG Facility are exempt from HON monitoring requirements.						
Compressors	All compressors in the EG Facility are exempt from HON monitoring requirements.						
Agitators	Currently, there are no agitators within the EG Facility.						
Closed-Vent Systems	The annual inspection of the closed-vent systems within the EG Facility was performed during Q4, 2002.						

Notes:

(1) Component count changed due to an updated valve count.

(2) Percent of valves leaking does not include valves that are nonrepairable or those being remonitored after repair.

Explanations for Delay of Repair: N/A for the reporting period.

Dates of Process Unit Shutdowns: See Attached Page

EPA/FOIA2018-00834

EHS - Air Section

File Name: eg sbpt h 1-03.xls

Formosa Plastics Corporation, Texas
201 Formosa Drive
Point Comfort, Texas 77978

HON SEMIANNUAL EQUIPMENT LEAK REPORT - 40 CFR 63.182 (d)
Process Unit Identification: Ethylene Dichloride Facility
Permit No. 19199/PSD-TX-760M5
Reporting Period: April 24, 2002 - October 24, 2002

	Month						
	April	May	June	July	August	September	October
Valves							
Number Monitored (1)	0	1711	96	26	1702	100	0
Number Leaking	0	1	0	0	0	0	0
Number Not Repaired	0	0	0	0	0	0	0
Percent Leaking (2)	0.00%	0.06%	0.00%	0.00%	0.00%	0.00%	0.00%
Flanges and Connectors							
Number Monitored	0	0	0	32	0	0	0
Number Leaking	0	0	0	0	0	0	0
Number Not Repaired	0	0	0	0	0	0	0
Percent Leaking (3)	0.00%	0.00%	0.00%	0.00%	0.00%	0.00%	0.00%
Pumps	All pumps in the EDC Facility are exempt from HON monitoring requirements.						
Compressors	All compressors in the EDC Facility are exempt from HON monitoring requirements.						
Agitators	Currently, there are no agitators within the EDC Facility.						
Closed-Vent Systems	The annual inspection of the closed-vent systems within the EDC Facility was completed in Q4, 2002.						

Notes:
(1) Component count changed due to an updated count.
(2) Percent of valves leaking does not include valves that are nonrepairable or those being remonitored after repair.
(3) Percent of leaking connectors includes those nonrepairable / total.

Explanations for Delay of Repair: N/A

Dates of Process Unit Shutdowns: See Attached Page

EPA/FOIA2018-00835

EHS - Air Section

File Name: edc sbpt h 1-03.xls

DATES OF UNIT SHUTDOWNS FOR EDC

April 24, 2002 to October 24, 2002

Date	Equipment	Duration of Downtime
8/11/02	DR-351B EDC Waste Gas Incinerator	5 days
8/11/02	DC-351B B Incinerator HCl Absorber	5 days
8/11/02	DC-352B B Incinerator Scrubber	5 days
8/11/02	DR-351C EDC Waste Gas Incinerator	3.27 days
8/11/02	DC-104 EDC Recovery Column	6.5 days
8/11/02	DB-301B EDC Wet Waste Gas Blower	3.5 days
8/11/02	DB-302B EDC Dry Gas Blower	3.5 days
8/11/02	DC-252A EDC Steam Stripper	4.5 days
8/11/02	DC-252B EDC Steam Stripper	4 days
8/11/02	DC-301 EDC Wet Waste Gas Scrubber	3.5 days
8/12/02	DC-351C C Incinerator HCl Absorber	2.42 days
8/12/02	DC-352C C Incinerator Scrubber	2.42 days
8/27/02	DC-104 EDC Recovery Column	1.88 days
8/29/02	DC-105 EDC HCl Stripper Column	1.20 days
9/17/02	DR-351B EDC Waste Gas Incinerator	7 days
10/17/02	DC-252A EDC Steam Stripper	1.36 Days
10/22/02	DB-301B EDC Wet Waste Gas Blower	1 day

EPA/FOIA2018-00836

File Name: edc shtdwn 1-03.doc

Formosa Plastics Corporation, Texas
201 Formosa Drive
Point Comfort, Texas 77978

HON SEMIANNUAL EQUIPMENT LEAK REPORT - 40 CFR 63.182 (d)
Process Unit Identification: Traffic Department Tanks DT 403 and 404 and FT-D02
Permit No. 19871/PSD-TX-760M5
Reporting Period: April 24, 2002 - October 24, 2002

	Month						
	April	May	June	July	August	September	October
Valves							
Number Monitored	0	174	75	0	174	74	0
Number Leaking	0	0	0	0	0	0	0
Number Not Repaired	0	0	0	0	0	0	0
Percent Leaking	0.00%	0.00%	0.00%	0.00%	0.00%	0.00%	0.00%
Flanges and Connectors							
Number Monitored	0	0	144	0	0	144	1
Number Leaking	0	0	0	0	0	0	0
Number Not Repaired	0	0	0	0	0	0	0
Percent Leaking	0.00%	0.00%	0.00%	0.00%	0.00%	0.00%	0.00%
Pumps	All pumps associated with these tanks are exempt from HON monitoring requirements.						
Compressors	Currently, there are no compressors in VOC service within the Traffic Facility.						
Agitators	Currently, there are no agitators within the Traffic Facility.						
Closed-Vent Systems	The annual inspection of the closed-vent systems on the tanks was performed in Q4, 2002.						

Notes: N/A

Explanations for Delay of Repair: N/A for the reporting period.

Dates of Process Unit Shutdowns: See Attached Page

EPA/FOIA2018-00837

Formosa Plastics Corporation, Texas
201 Formosa Drive
Point Comfort, Texas 77978

HON SEMIANNUAL EQUIPMENT LEAK REPORT - 40 CFR 63.182 (d)
Process Unit Identification: Gasoline Hydrotreater Unit
Permit No. 19168/PSD-TX-760M5
Reporting Period: June 10, 2002 - December 10, 2002

	Month						
	June	July	August	September	October	November	December
Valves							
Number Monitored (1) (4)	2412	9	0	2421	10	0	222
Number Leaking	7	0	0	10	0	0	0
Number Not Repaired	0	0	0	0	0	0	0
Percent Leaking (2)	0.29%	0.00%	0.00%	0.41%	0.00%	0.00%	0.00%
Flanges							
Number Monitored (4)	2348	1	0	2347	0	0	157
Number Leaking	1	0	0	0	0	0	0
Number Not Repaired	0	0	0	0	0	0	0
Percent Leaking (3)	0.04%	0.00%	0.00%	0.00%	0.00%	0.00%	0.00%
Connectors							
Number Monitored (4)	0	0	0	0	0	0	639
Number Leaking	0	0	0	0	0	0	0
Number Not Repaired	0	0	0	0	0	0	0
Percent Leaking	0.00%	0.00%	0.00%	0.00%	0.00%	0.00%	0.00%
Pumps	All pumps in the GHU are exempt from HON monitoring requirements.						
Compressors	All compressors in the GHU are exempt from HON monitoring requirements.						
Agitators	All agitators in the GHU are exempt from HON monitoring requirements.						
Closed-Vent Systems	The annual inspection of the closed-vent systems within the GHU Facility was completed in Q4, 2002.						

Notes:
(1) Valve count changed from previous report due to an updated valve count.
(2) Percent of valves leaking does not include valves that are nonrepairable or those being remonitored after repair.
(3) Percent of leaking flanges (connectors) includes those nonrepairable / total.
(4) Additional valves, flanges, and connectors were monitored in Q4, but after the December 10th reporting period.

Explanations for Delay of Repair: N/A for the reporting period.

Dates of Process Unit Shutdowns: See Attached Page

EPA/FOIA2018-00838

EHS - Air Section

File Name: ghu subt h 1-03.xls

---

bcc: [Clay Coleman
Jeff Lin
Sherman Ko
S. C. Cheng SJ 1/21/03
Jay Lo
Steve Marwitz
Brian Meek
Central File A. I. 8. b. ___]

b(7)(c)

HON Subp: H Semiannual Report
January 21. 003
Page 3

bcc: Clay oleman 1/14/03
Jeff a
She an Ko 1/14/03
S. C. heng
Jay
Stev Marwitz
Bria Meek 1/14/03
Cen l File A. 1. 8. b. ___

b7(c)

7001 2510 0008 0641 1486

CERTIFIED MAIL RECEIPT
(Domestic Mail Only; No Insurance Coverage Provided)

Postage	$ 1.06
Certified Fee	2.30
Return Receipt Fee (Endorsement Required)	1.75
Restricted Delivery Fee (Endorsement Required)	
Total Postage & Fees	$ 5.11

POINT COMFORT TX 77978 JAN 23 2003 Postmark USPS

Sent To
Street, Apt. No. or PO Box No. — 6300 Ocean Drive, Suite 1200
City, State, ZIP+4 — Corpus Christi, Texas 78412

PS Form 3800, January 2001 — See Reverse for Instructions

7001 2510 0008 0641 0519

CERTIFIED MAIL RECEIPT
(Domestic Mail Only; No Insurance Coverage Provided)

Postage	$ 1.06
Certified Fee	2.30
Return Receipt Fee (Endorsement Required)	1.75
Restricted Delivery Fee (Endorsement Required)	
Total Postage & Fees	$ 5.11

POINT COMFORT TX 77978 JAN 23 2003 Postmark USPS

Sent To
Street, Apt. No.; or PO Box No. — P.O. Box 13087
City, State, ZIP+4 — Austin, Texas 78711-3087

PS Form 3800, January 2001 — See Reverse for Instructions

7001 2510 0008 0641 1479

U.S. Postal Service
CERTIFIED MAIL RECEIPT
(Domestic Mail Only; No Insurance Coverage Provided)

Postage	$ 1.06
Certified Fee	2.30
Return Receipt Fee (Endorsement Required)	1.75
Restricted Delivery Fee (Endorsement Required)	
Total Postage & Fees	$ 5.11

POINT COMFORT TX 77978 JAN 23 2003 Postmark USPS

Sent To
Street, Apt. No.; or PO Box No. — 1445 Ross Avenue
City, State, ZIP+4 — Dallas, Texas 75202-2733

PS Form 3800, January 2001 — See Reverse for Instructions

EPA/FOIA2018-00841

SENDER: COMPLETE THIS SECTION

- Complete items 1, 2, and 3. Also complete item 4 if Restricted Delivery is desired.
- Print your name and address on the reverse so that we can return the card to you.
- Attach this card to the back of the mailpiece, or on the front if space permits. EHS-Bm

1. Article Addressed to:

Mr. Jim Bowman
Air Program Manager, Region 14
TCEQ – Natural Resource Center
6300 Ocean Drive, Suite 1200
Corpus Christi, Texas 78412

COMPLETE THIS SECTION ON DELIVERY

A. Signature
X ☐ Agent ☐ Addressee

B. Received by (Printed Name) C. Date of Delivery

D. Is delivery address different from item 1? ☐ Yes
If YES, enter delivery address below: ☐ No

JAN 24 2003
TCEQ
FIELD OPS/REGION 14

3. Service Type
☐ Certified Mail ☐ Express Mail
☐ Registered ☐ Return Receipt for Merchandise
☐ Insured Mail ☐ C.O.D.

4. Restricted Delivery? (Extra Fee) ☐ Yes

2. Article Number (Transfer from service label) 7001 2510 0008 0641 1486

PS Form 3811, August 2001 Domestic Return Receipt 102595-01-M-0381

SENDER: COMPLETE THIS SECTION

- Complete items 1, 2, and 3. Also complete item 4 if Restricted Delivery is desired.
- Print your name and address on the reverse so that we can return the card to you.
- Attach this card to the back of the mailpiece, or on the front if space permits. EHS-Bm

1. Article Addressed to:

Ms. Margaret Hoffman, Executive Director
TCEQ
Enforcement Div, Air Section (MC-169)
PO Box 13087
Austin, Texas 78711-3087

COMPLETE THIS SECTION ON DELIVERY

A. Signature
X DOUG BENNICH ☐ Agent ☐ Addressee
MAIL & MESSENGER SERVICE

B. Received by (Printed Name) C. Date of Delivery
JAN 27 2003

D. Is delivery address different from item 1? ☐ Yes
If YES, enter delivery address below: ☐ No
TBPC

3. Service Type
☐ Certified Mail ☐ Express Mail
☐ Registered ☐ Return Receipt for Merchandise
☐ Insured Mail ☐ C.O.D.

4. Restricted Delivery? (Extra Fee) ☐ Yes

2. Article Number (Transfer from service label) 7001 2510 0008 0641 0519

PS Form 3811, August 2001 Domestic Return Receipt 102595-01-M-0381

SENDER: COMPLETE THIS SECTION

- Complete items 1, 2, and 3. Also complete item 4 if Restricted Delivery is desired.
- Print your name and address on the reverse so that we can return the card to you.
- Attach this card to the back of the mailpiece, or on the front if space permits. EHS-Bm

1. Article Addressed to:

Mr. Samuel Coleman, P.E.
U.S. EPA (MC-6EN)
1445 Ross Avenue, Suite 1200
Dallas, Texas 75202-2733

COMPLETE THIS SECTION ON DELIVERY

A. Signature
X MICHAEL BAUMANN PCO ☐ Agent ☐ Addressee

B. Received by (Printed Name) C. Date of Delivery

D. Is delivery address different from item 1? ☐ Yes
If YES, enter delivery address below: ☐ No

3. Service Type
☐ Certified Mail ☐ Express Mail
☐ Registered ☐ Return Receipt for Merchandise
☐ Insured Mail ☐ C.O.D.

4. Restricted Delivery? (Extra Fee) ☐ Yes

2. Article Number (Transfer from service label) 7001 2510 0008 0641 1479

PS Form 3811, August 2001 Domestic Return Receipt 102595-01-M-0381

EPA/FOIA2018-00842

1#0000464417
(T417) 11/11/10

FORMOSA PLASTICS CORPORATION, TEXAS

ISO-9002 CERTIFIED
ISO-14001 CERTIFIED

P. O. BOX 700
201 FORMOSA DRIVE
POINT COMFORT, TX 77978

PHONE: 361-987-7000
FAX: 361-987-2363

July 24, 2003

Certified Mail: 7002-2410-0002-1130-0986

Mr. Samuel Coleman, P. E.
Director, Compliance Assurance and Enforcement Division (MC-6EN)
U. S. Environmental Protection Agency - Region 6
1445 Ross Avenue, Suite 1200
Dallas, Texas 75202-2733

RE: Formosa Plastics Corporation, Texas
TNRCC Air Quality Account No. CB-0038-Q
Traffic Facility - Permit No. 19871/PSD-TX-760M5
EDC Plant - Permit No. 19199/PSD-TX-760M5
EG Plant - Permit No. 19198/PSD-TX-760M5
VCM Plant - Permit No. 7699/PSD-TX-226M6
GHU Unit within Olefins Plant - Permit No. 19168/PSD-TX-760M5
HON Subpart H – Semiannual Report

RECEIVE
JUL 30 2003
Air/Toxics & Inspection
Coordination Branch
6EN-A

Dear Mr. Coleman:

As required by 40 CFR 63.182 (d), Formosa Plastics Corporation, Texas is submitting the Semiannual Fugitive Emissions Leak Reports. This report addresses the results of the monitoring conducted during the semiannual periods as well as the number of valves, pumps, compressors, agitators, and connectors where leaks were detected. The following are the units affected and the reporting period for each:

Vinyl Chloride Monomer Unit (VCM)	October 24, 2002– April 24, 2003
Ethylene Dichloride Plant (EDC)	October 24, 2002– April 24, 2003
Ethylene Glycol Plant (EG)	October 24, 2002– April 24, 2003
Traffic Facility – Tanks DT-403/404 and FT-D02	October 24, 2002– April 24, 2003
Gasoline Hydrotreater Unit (GHU)	December 11, 2002 – June 9, 2003

If you have any questions, please contact [Tamara Christian at (361) 987-7442.] 6&7(c)

Sincerely,

R. P. Smith
Vice President/General Manager
Formosa Plastics Corporation, Texas

Attachments

EPA/FOIA2018-00843

---

cc: Mr. Jim Bowman Certified Mail: 7002-2410-0002-1130-0993
Air Program Manager - Region 14
Texas Commission on Environmental Quality (TCEQ)
Natural Resource Building
6300 Ocean Drive, Suite 1200
Corpus Christi, Texas 78412

Ms. Margaret Hoffman, Executive Director Certified Mail: 7002-2410-0002-1130-1006
Texas Commission on Environmental Quality (TCEQ)
ATTN: Enforcement Division, Air Section (MC-169)
P. O. Box 13087
Austin, Texas 78711-3087

Formosa Plastics Corporation, Texas
201 Formosa Drive
Point Comfort, Texas 77978

RECEIVE
JUL 30 2003
Air/Toxics & Inspection
Coordination Branch
6EN-A

HON SEMIANNUAL EQUIPMENT LEAK REPORT - 40 CFR 63.182 (d)
Process Unit Identification: Vinyl Chloride Monomer Facility
Permit No. 7699/PSD-TX-226M6
Reporting Period: October 24, 2002 - April 24, 2003

	Month						
	October	November	December	January	February	March	April
Valves							
Number Monitored (1) (2) (3)	0	0	4251	7130	1	0	0
Number Leaking	0	0	0	1	0	0	0
Number Not Repaired	0	0	0	0	0	0	0
Percent Leaking	0.00%	0.00%	0.00%	0.01%	0.00%	0.00%	0.00%
Flanges and Connectors							
Number Monitored (1) (2) (3)	0	287	14864	1	0	0	0
Number Leaking	0	0	0	0	0	0	0
Number Not Repaired	0	0	0	0	0	0	0
Percent Leaking	0.00%	0.00%	0.00%	0.00%	0.00%	0.00%	0.00%
Pumps							
Number Monitored	5	5	5	5	5	5	5
Number Leaking	0	0	0	0	0	0	0
Number Not Repaired	0	0	0	0	0	0	0
Percent Leaking	0.00%	0.00%	0.00%	0.00%	0.00%	0.00%	0.00%
Compressors							
Number Monitored (2)	3	3	3	3	3	3	3
Number Leaking	0	0	0	0	0	0	0
Number Not Repaired	0	0	0	0	0	0	0
Agitators							
Number Monitored	1	1	1	1	1	1	1
Number Leaking	0	0	0	0	0	0	0
Number Not Repaired	0	0	0	0	0	0	0
Closed-Vent Systems	The annual inspection of the closed-vent systems within the VCM Facility was completed in Q4, 2002.						

Notes:

(1) The total component count changed from previous to current due to equipment being temporarily or permanently out of service and an updated component count.

(2) Additional components were monitored in Q4, 2002, but prior to the October reporting period.

(3) Includes components Quarterly Difficult to Monitor (QDTM).

Explanations for Delay of Repair: N/A for the reporting period.

Dates of Process Unit Shutdowns: See Attached Page

EPA/FOIA2018-00845

DATES OF UNIT SHUTDOWNS FOR VCM

October 24, 2002 to April 24, 2003

Date	Equipment	Duration of Downtime
10/8/02	VH-801B, Incinerator B	21.91
11/2/02	VR-401E, EDC cracker #5	48.30
11/2/02	VR-201B, Oxychlorination reactor	10.68
11/2/02	VC-501B, HCl column	10.17
11/2/02	VC-101, EDC distillation column	11.33
11/5/02	VC-301B, EDC dehydrator	1.12
11/10/02	VR-401C, EDC Cracker #3	1.54
11/24/02	VH-801B, Incinerator B	2.11
12/17/02	VR-201B, Oxychlorination reactor	2.13
12/25/02	VH-801A, Incinerator A	5.15
1/6/03	VH-801A, Incinerator A	2.25
1/10/03	VH-801C, Incinerator C	3.14
1/13/03	VC-630A, Ground water stripper	1.49
1/13/03	VH-801B, Incinerator B	5.08
1/18/03	VH-801C, Incinerator C	17.36
1/19/03	VC -630C EDC Stripper	2.48
1/19/03	VC-630A, Ground water stripper	19.74
1/24/03	VC-630B, Waste Water Stripper	67.09
1/28/03	VR-401F, EDC cracker #6	4.29
1/28/03	VR-401C, EDC Cracker #3	1.76
1/29/03	VR-201C, Oxychlorination reactor	1.73
2/5/03	VH-801A, Incinerator A	1.64
2/9/03	VH-801B, Incinerator B	44.66

Date	Equipment	Duration of Downtime
2/11/03	VC-630A, Ground water stripper	11.16
2/18/03	VR-401C, EDC Cracker #3	29.48
2/23/03	VC-630A, Ground water stripper	4.32
3/3/03	VR-280 Hydrogenation Reactor	15.09
3/21/03	VR-401D, EDC cracker #4	16.17
3/27/03	VC-630A, Ground water stripper	4.12
4/1/03	VC-630C, Waste Water Stripper	1.20
4/6/03	VR-401E, EDC cracker #5	9.14
4/6/03	VR-201B, Oxychlorination reactor	1.25

Formosa Plastics Corporation, Texas
201 Formosa Drive
Point Comfort, Texas 77978

HON SEMIANNUAL EQUIPMENT LEAK REPORT - 40 CFR 63.182 (d)
Process Unit Identification: Ethylene Glycol Facility
Permit No. 19198/PSD-TX-760M5
Reporting Period: October 24, 2002 - April 24, 2003

	Month						
	October	November	December	January	February	March	April
Valves							
Number Monitored (1)	0	2243	123	0	2231	90	0
Number Leaking	0	3	0	0	0	0	0
Number Not Repaired	0	0	0	0	0	0	0
Percent Leaking (2)	0.00%	0.13%	0.00%	0.00%	0.00%	0.00%	0.00%
Flanges and Connectors							
Number Monitored	0	3450	1798	4	6	0	0
Number Leaking	0	5	0	1	0	0	0
Number Not Repaired	0	0	0	0	0	0	0
Percent Leaking (3)	0.00%	0.10%	0.00%	0.02%	0.00%	0.00%	0.00%
Pumps	All pumps in the EG Facility are exempt from HON monitoring requirements.						
Compressors	All compressors in the EG Facility are exempt from HON monitoring requirements.						
Agitators	Currently, there are no agitators within the EG Facility.						
Closed-Vent Systems	The annual inspection of the closed-vent systems within the EG Facility was completed in Q4, 2002.						

Notes:

(1) Component count changed due to an updated count.

(2) Percent of valves leaking does not include valves that are nonrepairable or those being remonitored after repair.

(3) Percent of leaking connectors includes those nonrepairable / total.

Explanations for Delay of Repair: N/A for the reporting period.

Dates of Process Unit Shutdowns: See Attached Page

EPA/FOIA2018-00848

DATES OF UNIT SHUTDOWNS FOR EG

October 24, 2002 to April 24, 2003

Date	Equipment	Duration of Downtime
3/9/03	Ethylene Glycol Plant-Unplanned Maintenance	3.7 days
3/15/03	Ethylene Glycol Plant-Planned Maintenance	16.3 days

EPA/FOIA2018-00849

File Name: eg shutdown 7-03.doc

Formosa Plastics Corporation, Texas
201 Formosa Drive
Point Comfort, Texas 77978

HON SEMIANNUAL EQUIPMENT LEAK REPORT - 40 CFR 63.182 (d)
Process Unit Identification: Gasoline Hydrotreater Unit
Permit No. 19168/PSD-TX-760M5
Reporting Period: December 11, 2002 - June 9, 2003

	Month						
	December	January	February	March	April	May	June
Valves							
Number Monitored (1)	2316	20	2	2454	13	2	0
Number Leaking	20	2	0	13	1	0	0
Number Not Repaired	0	0	0	0	0	0	0
Percent Leaking (2)	0.86%	0.00%	0.00%	0.53%	0.00%	0.00%	0.00%
Flanges							
Number Monitored (1)	2256	5	0	2343	6	0	0
Number Leaking	5	0	0	6	0	0	0
Number Not Repaired	0	0	0	0	0	0	0
Percent Leaking (3)	0.22%	0.00%	0.00%	0.26%	0.00%	0.00%	0.00%
Connectors							
Number Monitored (4)	2619	1	0	2	0	0	0
Number Leaking	1	0	0	0	0	0	0
Number Not Repaired	0	0	0	0	0	0	0
Percent Leaking	0.00%	0.00%	0.00%	0.00%	0.00%	0.00%	0.00%
Pumps	All pumps in the GHU are exempt from HON monitoring requirements.						
Compressors	All compressors in the GHU are exempt from HON monitoring requirements.						
Agitators	All agitators in the GHU are exempt from HON monitoring requirements.						
Closed-Vent Systems	The annual inspection of the closed-vent systems within the GHU Facility was completed in Q4, 2002.						

Notes:
(1) Component count changed from previous report due to an updated valve count.
(2) Percent of valves leaking does not include valves that are nonrepairable or those being remonitored after repair.
(3) Percent of leaking flanges (connectors) includes those nonrepairable / total.

Explanations for Delay of Repair: N/A for the reporting period.

Dates of Process Unit Shutdowns: See Attached Page

EPA/FOIA2018-00850

DATES OF UNIT SHUTDOWNS FOR GHU UNIT

December 11, 2002 – June 9, 2003

Date	Equipment	Duration of Downtime (Days)
02/22/03	GHU Unit	11
04/15/03	GHU Feed Pump, G6662JB	2.6

EPA/FOIA2018-00851

File Name: ghu shtdwn 7-03.doc

Formosa Plastics Corporation, Texas
201 Formosa Drive
Point Comfort, Texas 77978

HON SEMIANNUAL EQUIPMENT LEAK REPORT - 40 CFR 63.182 (d)
Process Unit Identification: Ethylene Dichloride Facility
Permit No. 19199/PSD-TX-760M5
Reporting Period: October 24, 2002 - April 24, 2003

	Month						
	October	November	December	January	February	March	April
Valves							
Number Monitored (1)	0	1708	163	0	1696	133	0
Number Leaking	0	2	0	0	2	0	0
Number Not Repaired	0	0	0	0	0	0	0
Percent Leaking (2)	0.00%	0.11%	0.00%	0.00%	0.11%	0.00%	0.00%
Flanges and Connectors							
Number Monitored	0	4946	57	0	0	0	0
Number Leaking	0	8	0	0	0	0	0
Number Not Repaired	0	0	0	0	0	0	0
Percent Leaking (3)	0.00%	0.16%	0.00%	0.00%	0.00%	0.00%	0.00%
Pumps	All pumps in the EDC Facility are exempt from HON monitoring requirements.						
Compressors	All compressors in the EDC Facility are exempt from HON monitoring requirements.						
Agitators	Currently, there are no agitators within the EDC Facility.						
Closed-Vent Systems	The annual inspection of the closed-vent systems within the EDC Facility was completed in Q4, 2002.						

Notes:
(1) Component count changed due to an updated count.
(2) Percent of valves leaking does not include valves that are nonrepairable or those being remonitored after repair.
(3) Percent of leaking connectors includes those nonrepairable / total.

Explanations for Delay of Repair: N/A

Dates of Process Unit Shutdowns: See Attached Page

EPA/FOIA2018-00852

DATES OF UNIT SHUTDOWNS FOR DT-403 / 404 and FTD-02

October 24, 2002 to April 24, 2003

Date	Equipment	Duration of Downtime
	None for this equipment	

EPA/FOIA2018-00853

File Name: mt shutdown 7-03.doc

Formosa Plastics Corporation, Texas
201 Formosa Drive
Point Comfort, Texas 77978

HON SEMIANNUAL EQUIPMENT LEAK REPORT - 40 CFR 63.182 (d)
Process Unit Identification: Traffic Department Tanks DT 403 and 404 and FT-D02
Permit No. 19871/PSD-TX-760M5
Reporting Period: October 24, 2002 - April 24, 2003

	Month						
	October	November	December	January	February	March	April
Valves							
Number Monitored (1)	0	174	75	0	167	78	0
Number Leaking	0	0	0	0	0	0	0
Number Not Repaired	0	0	0	0	0	0	0
Percent Leaking	0.00%	0.00%	0.00%	0.00%	0.00%	0.00%	0.00%
Flanges and Connectors							
Number Monitored (1)	0	521	145	0	0	144	0
Number Leaking	0	0	0	0	0	0	0
Number Not Repaired	0	0	0	0	0	0	0
Percent Leaking	0.00%	0.00%	0.00%	0.00%	0.00%	0.00%	0.00%
Pumps	All pumps associated with these tanks are exempt from HON monitoring requirements.						
Compressors	Currently, there are no compressors in VOC service within the Traffic Facility.						
Agitators	Currently, there are no agitators within the Traffic Facility.						
Closed-Vent Systems	The annual inspection of the closed-vent systems on the tanks was performed in Q4, 2002.						

Notes: N/A

(1) Component count changed from previous report due to an updated valve count.

Explanations for Delay of Repair: N/A for the reporting period.

Dates of Process Unit Shutdowns: See Attached Page

EPA/FOIA2018-00854

DATES OF UNIT SHUTDOWNS FOR EDC

October 24, 2002 to April 24, 2003

Date	Equipment	Duration of Downtime
11/14/02	DR-351B Waste Gas Incinerator	1.45 Days
11/18/02	DR-351A Waste Gas Incinerator	2.66 Days
11/21/02	DC-104 Recovery Column	1.5 Days
12/8/02	DC-104 Recovery Column	5.5 Days
1/7/03	DC-252 A Waste Water Steam Stripper	3 Days
1/3/03	DB-302 A EDC Dry Waste Gas Blower	11 Days
1/18/03	DC-104 Recovery Column	3 Days
1/22/03	DC-104 Recovery Column	1.45 Days
1/29/03	DB-302 A EDC Dry Waste Gas Blower	6.45 Days
2/4/03	DB-302 B EDC Dry Waste Gas Blower	8 Days
2/24/03	DC-252 A Waste Water Steam Stripper	3 Days
2/25/03	DR-101 A EDC LTDC Reactor	1 Day
2/25/03	DR-101 B EDC LTDC Reactor	1 Day
2/25/03	DR-101 C EDC LTDC Reactor	1 Day
3/17/03	DC-252 B Waste Water Steam Stripper	4 Days
3/27/03	DR-351 C Waste Gas Incinerator	1 Day
3/30/03	DC-252 B Waste Water Steam Stripper	5 Days
4/21/03	DR-351 A Waste gas Incinerator	3 Days
4/21/03	DC-351 A Incinerator Absorber	3 Days
4/21/03	DC-352 A Incinerator Scrubber	3 Days
4/22/03	DB-302 B EDC Dry Waste Gas Blower	2 Days

APPENDIX S

ANNUAL TAB SUBMITTALS

Total Pages 66

FORMOSA PLASTICS CORPORATION, TEXAS

P. O. BOX 700
201 FORMOSA DRIVE
POINT COMFORT, TEXAS 77978

PHONE: 512/987-7000
FAX: 512/987-2721

FILE COPY

April 03, 1996

Certified Mail
P-195-035-801

Mr. Stanley Meiburg (6T)
Air, Pesticide, and Toxics Division
U.S. Environmental Protection Agency
1445 Ross Avenue, Suite 1200
Dallas, Texas 75202-2733

RE: Formosa Plastics Corporation, Texas
Benzene Waste Operations Reporting Requirements

Dear Mr. Meiburg:

Under the reporting requirements of 40 CFR Part 61 Subpart FF, Formosa Plastics Corporation, Texas is required to submit an annual report to determine if the total annual benzene quantity (TAB) from facility waste in the Olefins unit is ≥1 Mg/yr but <10 Mg/yr.

As required in 61.357(c) of Subpart FF, since the information in the annual report required by paragraphs (a)(1) through (a)(3) has not changed in the past year, a statement to that effect is required to be submitted.

Formosa Plastics has not changed operating parameters, production rates or wastewater flow rates from the Olefins Unit. Therefore the previous Subpart FF report is still in effect. Attached is the previous report which contains the information required by paragraphs (a)(1) through (a)(3).

This determination and subsequent report will be submitted each year. If there is a change in the process generating the waste that could cause the TAB to increase to 10 Mg/yr or more a report providing this information will be submitted.

If you have any questions please contact Ross Grones or John T. Hyak at (512) 987-7456 or (512) 987-7455, respectively. b7(c)

Sincerely,

for Ken Mounger.

W. Ken Mounger
Vice President/General Manager
Formosa Plastics Corporation, Texas

ATTACHMENT

cc: Mr. Dan Pearson, Executive Director Cert.# P-195-035-802
Texas Natural Resource Conservation Commission
Attn: Ms. Jeanne Philquist, Manager (MC-169)
Enforcement Division, Air Section
P.O. Box 13087
Austin, Texas 78711-3087

Mr. Charlie Spiekerman Cert.# P-195-035-807
Air Program Manager - Region 14
Texas Natural Resource Conservation Commission
1231 Agnes Street, Suite 103
Corpus Christi, Texas 78401

40 CFR PART 61 SUBPART FF
§61.357 Reporting Requirements

Company Name: Formosa Plastics Corporation, Texas
201 Formosa Drive
P. O. Box 700
Point Comfort, Texas 77978

Total Annual Benzene Quantity (TAB) at the Olefins Unit: 4.4 Mg/Yr

1	2		3		4			5	6	7	8
astestream ID	Controlled for Benzene? (check one)*		Is the water content of the waste stream >10%? (check one)		Identify waste stream type (check one)			Annual waste Quantity (Mg/yr)	Range of benzene concentration (ppmw)	Annual average flow-weighted benzene concentration (ppmw)	Annual Benzene Quantity (Mg/yr)
	Yes	No	<10%	>10%	Process Wastewater	Product Tank Drawdown	Landfill Leachate				
pent Caustic to Ampro)		✓		✓	✓			26,000	10-500	172.38	4.4

TAB = 4.4

wastestream is not controlled for benzene; complete the required information in columns 3 through 8.

CAA-Appendix

EPA/FOIA2018-00871

VP0614

4-47(OAS)
d: August 20, 1995 11:02am

bcc: Bob Kelley
Mike Rivet
Stan Ueng
John Hyak
John Bloom
Ross Grones
Central File

b(7)(c)

"G-2

ISO-9002 CERTIFIED
ISO-14001 CERTIFIED

P. O. BOX 700
201 FORMOSA DRIVE
POINT COMFORT, TEXAS 77978

PHONE: 512/987-7000
FAX: 512/987-2363

April 7, 1999

Certified Mail: Z-244-371-309

Mr. Samuel Coleman, P. E.
Director, Compliance Assurance and Enforcement Division (MC-6EN)
U. S. Environmental Protection Agency - Region 6
1445 Ross Avenue, Suite 1200
Dallas, Texas 75202-2733

RE: **Formosa Plastics Corporation, Texas**
Point Comfort, Calhoun County, Texas Operations
TNRCC Air Quality Account No. CB-0038-Q
Annual Submittal
NESHAPS Subpart FF (Benzene Waste Operations)

Dear Mr. Coleman,

Pursuant to 40 CFR 61, Formosa Plastics Corporation, Texas (FPC-TX) hereby submits the NESHAPS Subpart FF annual report. The total annual benzene (TAB) quantity from the facility waste has been determined to be 9.35 Megagrams per year (Mg / yr).

Per 40 CFR 61.357(c) for facilities with a TAB ≥ 1 Mg / yr and < 10 Mg / yr, the report contains information required by 61.357 (a)(1) through (a)(3). This determination will be repeated each year to confirm that the TAB has remained below 10 Mg / yr whenever there is a change in the process generating the waste that could cause the TAB to increase to 10 Mg / yr or more.

In addition, FPC-TX is submitting an update to its initial report for wastes containing benzene, but having a water content of < 10% (reference *Benzene NESHAP FAQ Handbook for Subparts BB and FF*, EPA/305-B-97-009, September 1997, page 8). As these wastes are < 10 % water, they are exempt from TAB quantification.

Should you have any questions, please contac[t Brian Meek at (512) 987-7457.] b(7)(c)

Sincerely,

R. P. Smith
Vice President/General Manager
Formosa Plastics Corporation, Texas

Attachments

~~A. II. 3. b.~~ A. I. 5. f. 002

cc: Mr. Jeff Saitas, Executive Director Certified Mail: Z-244-371-310
Texas Natural Resource Conservation Commission (TNRCC)
ATTN: Ms. Jeanne Philquist, Manager (MC-169)
Enforcement Division, Air Section
P. O. Box 13087
Austin, Texas 78711-3087

Mr. Jim Bowman Certified Mail: Z-244-371-311
Texas Natural Resource Conservation Commission (TNRCC)
Air Program Manager, Region 14
6300 Ocean Drive, Suite 1200
Corpus Christi, Texas 78412

1998 WASTE STREAMS SUBJECT TO TAB CALCULATIONS

1998 WASTE STREAMS SUBJECT TO TAB CALCULATIONS

Requirement	Olefins Spent Caustic	Olefins Dilution Steam	Flare Drum Condensate	Central Maintenance Wash Station
Is the waste stream controlled for benzene in accordance with Subpart FF?	NA	NA	NA	NA
Is the water content of the waste stream > 10%?	Yes	Yes	Yes	Yes
Is the waste stream a process wastewater?	Yes	Yes	Yes	No
Is the waste stream a product tank drawdown?	No	No	No	No
Is the waste stream a landfill leachate?	No	No	No	No
What is the annual waste quantity for the waste stream?	16, 294 Mg / year	71, 094 Mg / year	152 Mg / year	4.36 Mg / year
What are the ranges of the benzene concentration for the waste stream?	279 – 722 ppm	0.21 – 26.01 ppm	< 10 – 54.14 ppm	< 1.0 ppm
What is the annual average flow-weighted benzene concentration for the waste stream?	502 ppm	16.34 ppm	37.05 ppm	0.754 ppm
What is the annual benzene quantity for the waste stream?	8.19 Mg / year	1.16 Mg / year	0.0056 Mg / year	3.3×10^{-6} Mg / year

Total Annual Benzene (TAB) for Reporting Year 1998 = 9.35 Mg / year

CAA-Appendix S
EPA/FOIA2018-00876
VP0614

1998 WASTE STREAM UPDATE TO INITIAL NOTIFICATION

1998 WASTE STREAM UPDATE TO INITIAL NOTIFICATION

Requirement	Rinsed Catalyst	Spent Carbon Canisters	Exchanger Residue
Is the waste stream controlled for benzene in accordance with Subpart FF?	NA	NA	NA
Is the water content of the waste stream > 10%?	No	No	No
Is the waste stream a process wastewater?	No	No	No
Is the waste stream a product tank drawdown?	No	No	No
Is the waste stream a landfill leachate?	No	No	No
What is the annual waste quantity for the waste stream?	0.799 Mg / year	7.509 Mg / year	0.151 Mg / year
What are the ranges of the benzene concentration for the waste stream?	< 0.10 ppm	(+ / -) 1%	< 1.0 ppm
What is the annual average flow-weighted benzene concentration for the waste stream?	0.0755 ppm	10,000 ppm	0.772 ppm
What is the annual benzene quantity for the waste stream?	6.03×10^{-8} Mg / year	0.075 Mg / year	1.16×10^{-7} Mg / year

NOTE – These waste streams are < 10 % water and are therefore not included in the Total Annual Benzene (TAB) calculation. The list includes those waste streams that were not included in the initial report submitted in April, 1993.

KG-3

FORMOSA PLASTICS CORPORATION, TEXAS

ISO-9002 CERTIFIED
ISO-14001 CERTIFIED

P. O. BOX 700
201 FORMOSA DRIVE
POINT COMFORT, TEXAS 77978

PHONE: 512/987-7000
FAX: 512/987-2363

August 20, 1999

Certified Mail: Z-244-371-404

Mr. Samuel Coleman, P. E.
Director, Compliance Assurance and Enforcement Division (MC-6EN)
U. S. Environmental Protection Agency – Region 6
1445 Ross Avenue, Suite 1200
Dallas, Texas 75202-2733

RE: **Formosa Plastics Corporation, Texas**
Point Comfort, Calhoun County, Texas Operations
TNRCC Air Quality Account No. CB-0038Q
Change of Status Notification
NESHAPS Subpart FF (Benzene Waste Operations)

Dear Mr. Coleman:

Pursuant to 40 CFR Part 61, National Emission Standards for Hazardous Air Pollutants (NESHAPS), Formosa Plastics Corporation, Texas (FPC-TX) is giving notification of a change of status for the facility. FPC-TX anticipates exceeding 10 megagrams per year (Mg / yr) total annual benzene (TAB) quantity by the 4th quarter of 1999. FPC-TX will begin implementing the requirements for a facility of > 10 Mg / yr by October 1, 1999.

Should you have any questions, please contact [Brian Meek at (361) 987-7457.] b&7(c)

Sincerely,

Walter Chan for Randy S.

R. P. Smith
Vice President / General Manager
Formosa Plastics Corporation, Texas

A.f. 5.6 002

bcc: Walter Chen W. Chen
Stan Ueng
Jay Lo 8/17/99
Rick Crabtree 08/17/99
John T. Hyak 8/17/99
David Hill
Brian Meek 8/17/99
Raj Joshi 8/17/99
Central File A. I. 5. b. ____

b&7(c)

1C6-4

ISO-9002 CERTIFIED
ISO-14001 CERTIFIED

P. O. BOX 700
201 FORMOSA DRIVE
POINT COMFORT, TEXAS 77978

PHONE: 361/987-7000
FAX: 361/987-2363

April 6, 2000

Certified Mail: Z-319-090-554

Mr. Samuel Coleman, P. E.
Director, Compliance Assurance and Enforcement Division (MC-6EN)
U. S. Environmental Protection Agency - Region 6
1445 Ross Avenue, Suite 1200
Dallas, Texas 75202-2733

RE: Formosa Plastics Corporation, Texas
Point Comfort, Calhoun County, Texas Operations
TNRCC Air Quality Account No. CB-0038-Q
Annual TAB Submittal
NESHAPS Subpart FF (Benzene Waste Operations)

Dear Mr. Coleman:

Pursuant to 40 CFR 61, Formosa Plastics Corporation, Texas (FPC-TX) hereby submits the NESHAPS Subpart FF annual report. The total annual benzene (TAB) quantity from the facility waste has been determined to be 7.45 Megagrams per year (Mg / yr).

Please note that since September 1999 FPC-TX has been operating in accordance with a facility generating > 10 megagrams per year TAB. All applicable wastestreams are controlled in accordance with guidelines specified in 40 CFR 61, Subpart FF.

Should you have any questions, please contact [Brian Meek at (361) 987-7457.] b(7)(c)

Sincerely,

R. P. Smith
Vice President/General Manager
Formosa Plastics Corporation, Texas

Attachment

A.I.5.f.
003

1999 WASTE STREAMS SUBJECT TO TAB CALCULATIONS

Requirement	Olefins Spent Caustic	Olefins Dilution Steam	Flare Drum Condensate	Tank Dewatering Activities
Is the waste stream controlled for benzene in accordance with Subpart FF?	Yes	Yes	Yes	Yes
Is the water content of the waste stream > 10%?	Yes	Yes	Yes	Yes
Is the waste stream a process wastewater?	Yes	Yes	Yes	No
Is the waste stream a product tank drawdown?	No	No	No	Yes
Is the waste stream a landfill leachate?	No	No	No	No
What is the annual waste quantity for the waste stream?	23,239 Mg / year	73,910 Mg / year	6,910 Mg / year	638.23 Mg / year
What are the ranges of the benzene concentration for the waste stream?	60.7 – 466.6 ppm	25 - 217 ppb	6.3 – 111.7 ppm	17.5 – 568.3 ppm
What is the annual average flow-weighted benzene concentration for the waste stream?	294.2 ppm	95 ppb	68.0 ppm	205.5 ppm
What is the annual benzene quantity for the waste stream?	6.84 Mg / year	0.01 Mg / year	0.47 Mg / year	0.131 Mg / year

Total Annual Benzene (TAB) for Reporting Year 1999 = 7.451 Mg / year

1G-6

FORMOSA PLASTICS CORPORATION, TEXAS

ISO-9002 CERTIFIED
ISO-14001 CERTIFIED

P. O. BOX 700
201 FORMOSA DRIVE
POINT COMFORT, TX 77978

PHONE: 361-987-7000
FAX: 361-987-2363

FILE

April 5, 2002

Certified Mail: 7001-0320-0001-4550-2215

Mr. Samuel Coleman, P. E.
Director, Compliance Assurance and Enforcement Division (MC-6EN)
U. S. Environmental Protection Agency – Region 6
1445 Ross Avenue, Suite 1200
Dallas, Texas 75202-2733

RE: Formosa Plastics Corporation, Texas
Point Comfort, Calhoun County, Texas Operations
TNRCC Air Quality Account No. CB-0038-Q
NESHAPS Subpart FF (Benzene Waste Operations) Reports

Dear Mr. Coleman:

Pursuant to 40 CFR Part 61, National Emission Standards for Hazardous Air Pollutants (NESHAPS), Benzene Waste Operations, Formosa Plastics Corporation, Texas (FPC-TX) is submitting (1) the quarterly report for the reporting period January 1 through March 31, 2002, (2) an annual report attached to the quarterly report summarizing any problems associated with the required inspections for RY 2001 (as previously reported on a quarterly basis), and (3) the annual Total Annual Benzene (TAB) determination for RY 2001.

Should you have any questions, please contact [Brian Meek at (361) 987-7457.] b(7)(C)

Sincerely,

for

R. P. Smith
Vice President / General Manager
Formosa Plastics Corporation, Texas

Attachments

A. I. 5. b.

014

EPA/FOIA2018-00883

cc: Mr. Jeff Saitas, Executive Director Certified Mail: 7001-0320-0001-4550-2208
Texas Natural Resource Conservation Commission (TNRCC)
Attn: Ms. Jeanne Philquist, Manager (MC-169)
Enforcement Division, Air Section
P. O. Box 13087
Austin, Texas 78711-3087

Mr. Jim Bowman Certified Mail: 7001-0320-0001-4550-2192
Texas Natural Resource Conservation Commission (TNRCC)
Air Program Manager, Region 14
6300 Ocean Drive, Suite 1200
Corpus Christi, Texas 78412

CONTENTS

ITEM NO.	REGULATORY CITATION	DESCRIPTION
I.	61.357 (d)(6)	Quarterly certification that all of the required inspections have been carried out in accordance with the requirements of this subpart.
II.	61.357 (d)(7)(iii)	Periods of operation when the average concentration of benzene in the monitored wastestream is ≥ 10 ppmw and/or the TAB is ≥ 1.0 Mg / year.
III.	61.357 (d)(7)(iv)(F)	Periods when pilot flames of the flares were absent.
IV.	61.357 (d)(7)(iv)(I)	Occurrences when carbon canisters were not replaced in accordance with this subpart.
V.	61.357 (d)(7)(v)	Periods when the pressure in a waste management unit (normally in a vacuum) is greater than or equal to atmospheric pressure.
VI.	61.357 (d)(8)	Annual inspections and detectable emissions.
Attachment I	61.357 (d)(7)(iv)(F)	Periods when pilot flames of the flares were absent.
Attachment II	61.357 (d)(8)	Annual Report

EPA/FOIA2018-00885

Item I

40 CFR 61.357 (d)(6)

Quarterly Inspection Certification

Formosa Plastics Corporation, Texas certifies that the required inspections have been carried out in accordance with the requirements of 40 CFR 61, Subpart FF.

Item II

40 CFR 61.357 (d)(7)(iii)

Periods of Operation

For each treatment process or wastewater treatment system monitored in accordance with 61.354(b), no periods of operation occurred during which (1) the flow-weighted annual average concentration of benzene in the monitored waste stream entering the facility wastewater management unit was equal to or greater than 10 ppmw and (2) the total annual benzene quantity was equal to or greater than 1.0 Mg / year.

Item III

40 CFR 61.357 (d)(7)(iv)(F)

Flare Pilot Flames

The pilot flames for the Olefins I and II Elevated Flares, the Olefins II Plant Low Pressure Flare, and the Gasoline Hydrotreater Unit (GHU) Flare were absent during the reporting period as indicated in *Attachment I* of this report. The pilot flame absences occurred only when the flares were shutdown and corrective actions were followed as indicated in the attachment.

Item IV

40 CFR 61.357 (d)(7)(iv)(I)

Carbon Canisters

No occurrences occurred when the carbon in the carbon adsorber system (carbon canisters) was not replaced according to the pre-determined schedule and / or Standard Operating Procedures (SOP) in place.

Item V

40 CFR 61.357 (d)(7)(v)

Waste Management Units Under Vacuum

Formosa Plastics Corporation, Texas has no closed-vent systems under vacuum, and therefore, this subsection is not applicable.

Item VI

40 CFR 61.357 (d)(8)

Annual Inspection Summary

For Olefins I, the annual inspections required by 61.342 through 61.354 were carried out during the 3rd Quarter 2001 and there were no detectable benzene emissions (≥ 500 ppm) measured. Therefore, no repairs or corrective actions were required. For Olefins II, the annual inspections were carried out in the 2nd Quarter of 2001 and the results included in the quarterly report for that period. It is anticipated that the next annual inspection will be performed during the 2nd Quarter 2002 for both Olefins I and II.

In addition, attached is a summary of the inspections performed in RY 2001during which detectable emissions were measured or problems noted that could have resulted in benzene emissions. Also included is information about the corrective actions taken. Note – all of these items were included in previous quarterly reports.

I certify that the NESHAPS Subpart FF Quarterly Report is correct to the best of my knowledge.

R. P. Smith, Vice President / General Manager

Date

EPA/FOIA2018-00887

Attachment I

Pilot Flame Outages for Olefins I and GHU Flares

EPA/FOIA2018-00888

FLARE PILOT LIGHT OUTAGE REPORT
40 CFR 60.665(l)(4), 60.705(l), and 60.115b(d)(3)

Company Name : Formosa Corporation, Texas
Unit Description : EPN 1018 Emergency Flare
Texas Permit No. : # 19168
PSD-TX Permit No. : PSD-TX-760M5

Reporting Period: 01/01/02 to 03/31/02

Date	Time	Problem Description
03/06/02	17:01 THRU 17:18	Flare tripped on flame failure. Flare restarted immediately.

EPA/FOIA2018-00889

FLARE PILOT LIGHT OUTAGE REPORT
60.115b(d)(3)

Company Name : Formosa Corporation, Texas
Unit Description : EPN 8003B GHU Low Pressure Flare
Texas Permit No. : # 19168
PSD-TX Permit No. : PSD-TX-760M5

Reporting Period: 01/01/02 to 03/31/02

Date	Time	Problem Description
01/04/2002	15:56 THRU 16:20	Flare tripped on flame failure. Flare restarted immediately.
01/10/2002	09:10 THRU 10:51	Changed control system program to indicate cause of shutdown. This was a planned event and prior to shutdown, tank vents were routed to the Olefins I elevated flare and Zimpro lined to firebox.
02/12/2002	08:10 THRU 15:05	Instrument department worked on instrument panel This was a planned event and prior to shutdown, tank vents were routed to the Olefins I elevated flare and Zimpro lined to firebox.
02/11/2002	07:55 THRU 16:05	Instrument department changed out lights on light panel This was a planned event and prior to shutdown, tank vents were routed to the Olefins I elevated flare and Zimpro lined to firebox.
02/08/2002	13:03 THRU 13:07	A blower speed trip test was performed. This was a planned event and prior to shutdown, tank vents were routed to the Olefins I elevated flare and Zimpro lined to firebox.

FLARE PILOT LIGHT OUTAGE REPORT
40 CFR 60.665(l)(4), 60.705(l), and 60.115b(d)(3)

Company Name : Formosa Corporation, Texas
Unit Description : EPN 1067 Olefins II Emergency Flare
Texas Permit No. : # 19168
PSD-TX Permit No. : PSD-TX-760M5

Reporting Period: 01-01-02 to 03-31-02

Date	Time	Problem Description
N/A	N/A	No outages to report

FLARE PILOT LIGHT OUTAGE REPORT
60.115b(d)(3)

Company Name : Formosa Corporation, Texas
Unit Description : EPN 1087 Olefins II Plant Low Pressure Flare
Texas Permit No. : # 19168
PSD-TX Permit No. : PSD-TX-760M5

Reporting Period: 01-01-02 to 03-31-02

Date	Time	Problem Description
3/28/02	09:08 03/28/02 thru 20:11 03/28/02	Instrument modification

Attachment II

Annual Report for RY 2001

EPA/FOIA2018-00892

In RY 2001, FPC-TX reported on a quarterly basis any problems revealed by inspections during which detectable emissions were measured or a problem that could have resulted in emissions of benzene from a Subpart FF source. Most of these had to do with the flares and a summary is attached. In addition, there were two other situations as described below.

On June 19, 2001, the Olefins II facility began generating waste subject to Subpart FF requirements. The initial (annual) inspections required by 61.342 through 61.354 were carried out during this reporting period for this facility. There was one detectable benzene emission (≥ 500 ppm) measured on a valve associated with the Zimpro sump. The initial repair attempt was successful the valve has been repaired.

During the months of July and August, car seals on valves in the carbon canister systems in Olefins II were not visually inspected to ensure that the positions were closed. However, the inspection performed in September (i.e. quarterly) indicated that the car seals were indeed closed. Therefore, it is the opinion of FPC-TX that there were no days when the vent streams were diverted to the atmosphere.

FLARE PILOT LIGHT OUTAGE REPORT

Company Name : Formosa Corporation, Texas
Unit Description : EPN 8003B GHU Low Pressure Flare
Texas Permit No. : # 19168
PSD-TX Permit No. : PSD-TX-760M5

Reporting Period: 01/01/01 To 03/31/01

Date	Time	Problem Description
02/03/01	08:45 02/03/01 thru 08:55 02/03/01	Flare shutdown due to flame failure. Flare restarted.
02/04/01	08:30 02/04/01 thru 08:40 02/04/01	Flare shutdown due to flame failure. Flare restarted.
02/04/01	23:07 02/04/01 thru 10:35 02/05/01	Flare shutdown due to loss of assist gas. Maintenance repaired solenoid valve. GHU vents routed to elevated flare. Zimpro vent routed to furnace firebox.
02/28/01	08:23 02/28/01 thru 15:55 02/28/01	Flare shutdown for valve changeout. GHU vents routed to elevated flare. Zimpro shutdown.
03/05/01	14:15 03/05/01 thru 03:30 03/06/01	Flare shutdown for maintenance. GHU vents routed to elevated flare. Zimpro vent routed to furnace firebox.
03/06/01	13:12 03/06/01 thru 15:14 03/06/01	Flare shutdown for maintenance. GHU vents routed to elevated flare. Zimpro vent routed to furnace firebox.
03/07/01	16:50 03/07/01 thru 17:05 03/07/01	Flare shutdown due to flame failure. Flare restarted.

FLARE PILOT LIGHT OUTAGE REPORT
61.357 (d)(7)

Company Name : Formosa Corporation, Texas
Unit Description : EPN 8003B GHU Low Pressure Flare
Texas Permit No. : # 19168
PSD-TX Permit No. : PSD-TX-760M5

Reporting Period: 04/01/01 To 06/30/01

Date	Time	Problem Description
04/04/01	06:31 04/04/01 thru 19:20 04/04/01	Flare shutdown for maintenance. GHU vents routed to elevated flare. Zimpro vent routed to furnace firebox.
04/05/01	17:29 04/05/01 thru 19:25 04/05/01	Flare shutdown for maintenance. GHU vents routed to elevated flare. Zimpro vent routed to furnace firebox.
04/06/01	04:10 04/06/01 thru 21:30 04/06/01	Flare shutdown for maintenance. GHU vents routed to elevated flare. Zimpro vent routed to furnace firebox.
04/08/01	11:04 04/08/01 thru 11:06 04/08/01	Flare shutdown due to flame failure. Flare restarted immediately.
04/16/01	16:59 04/16/01 thru 17:08 04/16/01	Flare shutdown due to flame failure. Flare restarted immediately.
04/29/01	14:59 04/29/01 thru 15:05 04/29/01	Flare shutdown due to flame failure. Flare restarted immediately.
05/11/01	10:16 05/11/01 thru 17:10 05/11/01	Flare shutdown for maintenance on Zimpro vent line. Zimpro vent routed to fireboxes. GHU vents routed to elevated flare.

FLARE PILOT LIGHT OUTAGE REPORT
61.357 (d)(7)

Company Name : Formosa Corporation, Texas
Unit Description : EPN 8003B GHU Low Pressure Flare (cont'd.)
Texas Permit No. : # 19168
PSD-TX Permit No. : PSD-TX-760M5

Reporting Period: 04/01/01 To 06/30/01

Date	Time	Problem Description
05/14/01	14:00 05/14/01 thru 14:05 05/14/01 14:09 05/14/01 thru 15:59 05/14/01	Flare shutdown twice due to flame failure. Flare restarted immediately.
05/14/01	22:20 05/14/01 thru 15:56 05/15/01	Flare shutdown due to flame failure. Flare restarted. Zimpro vent already lined up to firebox.
05/30/01	15:10 05/30/01 thru 16:10 05/30/01	Flare shutdown due to flame failure. Flare restarted immediately. Zimpro vent already lined up to firebox.
06/01/01	11:00 06/01/01 thru 11:26 06/01/01	Flare shutdown due to flame failure. Flare restarted immediately. Zimpro vent routed to firebox.
06/17/01	05:55 06/17/01 thru 13:50 06/17/01	Flare tripped. Zimpro vent routed to firebox. Flare repaired and restarted.

FLARE PILOT LIGHT OUTAGE REPORT
61.357(d)(7)

Company Name : Formosa Corporation, Texas
Unit Description : EPN 1087 Olefins II Plant Low Pressure Flare
Texas Permit No. : # 19168
PSD-TX Permit No. : PSD-TX-760M5

Reporting Period: 06/19/01 To 06/30/01

Date	Time	Problem Description
06/22/01	03:35 06/22/01 thru 04:58 06/22/01	Flare tripped due to flame failure. Attempted restart 4 times before flare operational.

Company Name : Formosa Corporation, Texas
Unit Description : EPN 1067 Olefins II Emergency Flare
Texas Permit No. : # 19168
PSD-TX Permit No. : PSD-TX-760M5

Reporting Period: 06/19/01 To 06/30/01

Date	Time	Problem Description
No data reported.		

EPA/FOIA2018-00897

FLARE PILOT LIGHT OUTAGE REPORT
60.115b(d)(3)

Company Name : Formosa Corporation, Texas
Unit Description : EPN 8003B GHU Low Pressure Flare
Texas Permit No. : # 19168
PSD-TX Permit No. : PSD-TX-760M5

Reporting Period: 07/01/01 To 09/30/01

Date	Time	Problem Description
07/30/01	08:43 07/30/01 thru 08:50 07/30/01	Flare tripped on flame failure. Flare restarted immediately. Zimpro vent already lined up to firebox.
07/31/01	08:40 07/31/01 thru 08:57 07/31/01	Flare tripped on flame failure. Flare restarted immediately. Zimpro vent already lined up to firebox.
08/01/01	08:30 08/01/01 thru 08:38 08/01/01	Flare tripped on flame failure. Flare restarted immediately. Zimpro vent already lined up to firebox.
08/23/01	09:14 08/23/01 thru 09:36 08/23/01	Flare tripped on flame failure. Flare restarted immediately. Zimpro vent already lined up to firebox.
08/25/01	09:09 08/25/01 thru 09:17 08/25/01	Flare tripped on flame failure. Flare restarted immediately. Zimpro vent already lined up to firebox.
08/26/01	09:08 08/26/01 thru 09:18 08/26/01	Flare tripped on flame failure. Flare restarted immediately. Zimpro vent already lined up to firebox.
08/29/01	15:17 08/29/01 thru 15:47 08/29/01	Flare tripped on flame failure. Flare restarted immediately. Zimpro vent already lined up to firebox.
09/16/01	09:53 09/16/01 thru 10:03 09/16/01	Flare tripped on flame failure. Flare restarted immediately.
09/18/01	08:49 09/18/01 thru 09:08 09/13/01	Flare tripped on flame failure. Flare restarted immediately.

09/19/01	09:12 09/19/01 thru 09:24 09/19/01	Flare tripped on flame failure. Flare restarted immediately.
09/20/01	09:10 09/20/01 thru 09:18 09/20/01	Flare tripped on flame failure. Flare restarted immediately.
09/21/01	10:06 09/21/01 thru 10:15 09/21/01	Flare tripped on flame failure. Flare restarted immediately.
09/22/01	09:15 09/22/01 thru 09:24 09/22/01	Flare tripped on flame failure. Flare restarted immediately.
09/23/01	10:04 09/23/01 thru 10:14 09/23/01	Flare tripped on flame failure. Flare restarted immediately.
09/25/01	09:30 09/25/01 thru 09:55 09/25/01	Flare tripped on flame failure. Flare restarted immediately.
09/25/01	09:44 09/25/01 thru 09:55 09/25/01	Flare tripped on flame failure. Flare restarted immediately.
09/26/01	09:15 09/26/01 thru 09:22 09/26/01	Flare tripped on flame failure. Flare restarted immediately.
09/27/01	09:00 09/27/01 thru 15:00 09/27/01	Flare shutdown for instrument maintenance Flare restarted immediately.
09/28/01	09:12 09/28/01 thru 09:25 09/28/01	Flare tripped on flame failure. Flare restarted immediately.
09/29/01	09:07 09/29/01 thru 11:15 09/29/01	Flare tripped on flame failure. Zimpro lined to firebox Flare restarted immediately
09/30/01	09:15 09/30/01 thru 10:05 09/30/01	Flare tripped on flame failure. Zimpro lined to firebox Flare restarted immediately.

FLARE PILOT LIGHT OUTAGE REPORT
40 CFR 60.665(l)(4), 60.705(l), and 60.115b(d)(3)

Company Name : Formosa Corporation, Texas
Unit Description : EPN 1067 Olefins II Emergency Flare
Texas Permit No. : # 19168
PSD-TX Permit No. : PSD-TX-760M5

Reporting Period: 07-01-01 to 09-30-01

Date	Time	Problem Description
7/28/01	12:30 07/28/01 thru 12:45 07/28/01	Low flow to flare Cleared alarms and reduced steam flow and relit pilots
8/29/01	06:10 08/29/01 thru 06:15 08/29/01	1 pilot went out Increased fuel gas flow
9/20/01	16:15 09/20/01 thru 16:17 09/20/01	High instrument air purge put out pilot Cleared alarms and relit pilots
9/23/01	07:30 09/23/01 thru 07:40 09/23/01	Condensate purge steam put out pilot Cleared alarms and relit pilots

FLARE PILOT LIGHT OUTAGE REPORT
60.115b(d)(3)

Company Name : Formosa Corporation, Texas
Unit Description : EPN 8003B GHU Low Pressure Flare
Texas Permit No. : # 19168
PSD-TX Permit No. : PSD-TX-760M5

Reporting Period: 10/01/01 To 12/31/01

Date	Time	Problem Description
10/06/01	09:05 10/06/01 thru 10/06/2001 9:15	Flare tripped on flame failure. Flare restarted immediately.
10/26/01	12:11 10/26/01 thru 10/26/2001 12:46	Flare tripped on flame failure. Flare restarted immediately.
11/08/01	09:02 11/08/01 thru 11/08/2001 9:30	Flare tripped on flame failure. Flare restarted immediately.
11/09/01	03:50 11/09/01 thru 11/09/2001 6:10	Flare tripped on flame failure. Tank vents were routed to the Olefins I elevated flare and Zimpro lined to firebox.
11/24/01	19:05 11/24/01 thru 11/24/2001 19:30	Flare tripped on flame failure. Flare restarted immediately.
12/14/01	03:23 12/14/01 thru 12/14/2001 6:25	Flare tripped on flame failure. Tank vents were routed to the Olefins I elevated flare and Zimpro lined to firebox.
12/22/01	11:26 12/22/01 thru 12/22/2001 11:35	Flare tripped on flame failure. Flare restarted immediately.

FLARE PILOT LIGHT OUTAGE REPORT
40 CFR 60.665(l)(4), 60.705(l), and 60.115b(d)(3)

Company Name : Formosa Corporation, Texas
Unit Description : EPN 1018 Emergency Flare
Texas Permit No. : # 19168
PSD-TX Permit No. : PSD-TX-760M5

Reporting Period: 10/01/01 To 12/31/01

Date	Time	Problem Description
11/27/01	11:27 11/27/2001 thru 11/27/01 12:04	Flare tripped on flame failure. Flare restarted immediately.
12/22/01	11:20 12/22/2001 thru 12/22/01 11:30	Flare tripped on flame failure. Flare restarted immediately.
12/28/01	21:50 12/28/2001 thru 12/28/01 22:03	Flare tripped on flame failure. Flare restarted immediately.

EPA/FOIA2018-00903

RY 2001 Total Annual Benzene

2001 WASTE STREAMS SUBJECT TO TAB CALCULATIONS

Requirement	Olefins I Spent Caustic	Olefins I Dilution Steam	Olefins I Flare Drum Condensate	Olefins I Tank Dewatering Activities
Is the waste stream controlled for benzene in accordance with Subpart FF?	Yes	Yes	Yes	Yes
Is the water content of the waste stream > 10%?	Yes	Yes	Yes	Yes
Is the waste stream a process wastewater?	Yes	Yes	Yes	No
Is the waste stream a product tank drawdown?	No	No	No	Yes
Is the waste stream a landfill leachate?	No	No	No	No
What is the annual waste quantity for the waste stream?	24,212 Mg / year	106,999 Mg / year	760 Mg / year	0 Mg / year
What are the ranges of the benzene concentration for the waste stream?	284 - 664 ppm	1.3 – 4.1 ppm	21 - 35 ppm	N/A; no activities in RY 2001
What is the annual average flow-weighted benzene concentration for the waste stream?	411 ppm	2.9 ppm	29 ppm	N/A; no activities in RY 2001
What is the annual benzene quantity for the waste stream?	9.96 Mg / year	0.31 Mg / year	0.02 Mg / year	0 Mg / year

Total Annual Benzene (TAB) for Olefins I for RY 2001 = 10.29 Mg / year

CAA-Appendix S
EPA/FOIA2018-00905
VP0614

2001 WASTE STREAMS SUBJECT TO TAB CALCULATIONS

Requirement	Olefins II Spent Caustic	Olefins II Dilution Steam	Olefins II Flare Drum Condensate	Olefins II Tank Dewatering Activities
Is the waste stream controlled for benzene in accordance with Subpart FF?	Yes	Yes	Yes	Yes
Is the water content of the waste stream > 10%?	Yes	Yes	Yes	Yes
Is the waste stream a process wastewater?	Yes	Yes	Yes	No
Is the waste stream a product tank drawdown?	No	No	No	Yes
Is the waste stream a landfill leachate?	No	No	No	No
What is the annual waste quantity for the waste stream?	912 Mg / year	35 Mg / year	193 Mg / year	0 Mg / year
What are the ranges of the benzene concentration for the waste stream?	354 - 494 ppm	0.4 – 1.0 ppm	11.3 – 12.8 ppm	N/A; no activities in RY 2001
What is the annual average flow-weighted benzene concentration for the waste stream?	426 ppm	0.8 ppm	12 ppm	N/A; no activities in RY 2001
What is the annual benzene quantity for the waste stream?	0.39 Mg / year	0.00002 Mg / year	0.002 Mg / year	0 Mg / year

Total Annual Benzene (TAB) for Olefins II for RY 2001 = 0.39 Mg / year

TAB for Olefins I and II = 10.68 Mg / year

CAA-Appendix S

EPA/FOIA2018-00906

VP0614

KG-1

FORMOSA PLASTICS CORPORATION, TEXAS

ISO-9002 CERTIFIED
ISO-14001 CERTIFIED

P. O. BOX 700
201 FORMOSA DRIVE
POINT COMFORT, TEXAS 77978

PHONE: 361/987-7000
FAX: 361/987-2363

FILE

April 7, 2003

Certified Mail: 7002-2410-0002-1129-4407

Mr. Samuel Coleman, P. E.
Director, Compliance Assurance and Enforcement Division (MC-6EN)
U. S. Environmental Protection Agency – Region 6
1445 Ross Avenue, Suite 1200
Dallas, Texas 75202-2733

RE: **Formosa Plastics Corporation, Texas**
Point Comfort, Calhoun County, Texas Operations
TNRCC Air Quality Account No. CB-0038-Q
NESHAPS Subpart FF (Benzene Waste Operations) Reports

Dear Mr. Coleman:

Pursuant to 40 CFR Part 61, National Emission Standards for Hazardous Air Pollutants (NESHAPS), Benzene Waste Operations, Formosa Plastics Corporation, Texas (FPC-TX) is submitting (1) the quarterly report for the reporting period January 1 through March 31, 2003, (2) an annual report attached to the quarterly report summarizing any problems associated with the required inspections for RY 2002 (as previously reported on a quarterly basis), and (3) the Total Annual Benzene (TAB) determination for RY 2002.

Should you have any questions, please contac[t] [Brian Meek at (361) 987-7457.]

Sincerely,

R. P. Smith
Vice President / General Manager
Formosa Plastics Corporation, Texas

Attachments

A. I. S. b. 018

---

cc: Ms. Margaret Hoffman, Executive Director Certified Mail: 7002-2410-0002-1129-4414
Texas Commission on Environmental Quality (TCEQ)
Enforcement Division, Air Section
P. O. Box 13087
Austin, Texas 78711-3087

Mr. Jim Bowman Certified Mail: 7002-2410-0002-1129-4421
Texas Commission on Environmental Quality (TCEQ)
Air Program Manager, Region 14
6300 Ocean Drive, Suite 1200
Corpus Christi, Texas 78412

Quarterly Report

Q1 2003

EPA/FOIA2018-00909

CONTENTS

ITEM NO.	REGULATORY CITATION	DESCRIPTION
I.	61.357 (d)(6)	Quarterly certification that all of the required inspections have been carried out in accordance with the requirements of this subpart.
II.	61.357 (d)(7)(iii)	Periods of operation when the average concentration of benzene in the monitored wastestream is ≥ 10 ppmw and/or the TAB is ≥ 1.0 Mg / year.
III.	61.357 (d)(7)(iv)(F)	Periods when pilot flames of the flares were absent.
IV.	61.357 (d)(7)(iv)(I)	Occurrences when carbon canisters were not replaced in accordance with this subpart.
V.	61.357 (d)(7)(v)	Periods when the pressure in a waste management unit (normally in a vacuum) is greater than or equal to atmospheric pressure.
VI.	61.357 (d)(8)	Annual inspections and detectable emissions.
Attachment I	61.357 (d)(7)(iv)(F)	Periods when pilot flames of the flares were absent.

EPA/FOIA2018-00910

Item I

40 CFR 61.357 (d)(6)

Quarterly Inspection Certification

Formosa Plastics Corporation, Texas certifies that the required inspections have been carried out in accordance with the requirements of 40 CFR 61, Subpart FF.

Item II

40 CFR 61.357 (d)(7)(iii)

Periods of Operation

For each treatment process or wastewater treatment system monitored in accordance with 61.354(b), no periods of operation occurred during which (1) the flow-weighted annual average concentration of benzene in the monitored waste stream entering the facility wastewater management unit was equal to or greater than 10 ppmw and (2) the total annual benzene quantity was equal to or greater than 1.0 Mg / year.

Item III

40 CFR 61.357 (d)(7)(iv)(F)

Flare Pilot Flames

The pilot flames for the Olefins I and II Elevated Flares, the Olefins II Plant Low Pressure Flare, and the Gasoline Hydrotreater Unit (GHU) Flare were absent during the reporting period as indicated in *Attachment I* of this report. The pilot flame absences occurred only when the flares were shutdown and corrective actions were followed as indicated in the attachment.

Item IV

40 CFR 61.357 (d)(7)(iv)(I)

Carbon Canisters

No occurrences occurred when the carbon in the carbon adsorber system (carbon canisters) was not replaced according to the pre-determined schedule and / or Standard Operating Procedures (SOP) in place.

EPA/FOIA2018-00911

Item V

40 CFR 61.357 (d)(7)(v)

Waste Management Units Under Vacuum

Formosa Plastics Corporation, Texas has no closed-vent systems under vacuum, and therefore, this subsection is not applicable.

Item VI

40 CFR 61.357 (d)(8)

Annual Inspection Summary

For Olefins I, the annual inspections required by 61.342 through 61.354 were carried out during the 3rd Quarter 2002 and there were no detectable benzene emissions (≥ 500 ppm) measured. Therefore, no repairs or corrective actions were required. For Olefins II, the annual inspections were carried out in the 2nd Quarter of 2002 and the results included in the quarterly report for that period.

In addition, attached is the annual report of the inspections performed in RY 2002 during which detectable emissions were measured or problems noted that could have resulted in benzene emissions. Also included is information about the corrective actions taken. Note – all of these items were included in previous quarterly reports.

I certify that the NESHAPS Subpart FF Quarterly Report is correct to the best of my knowledge.

R. P. Smith, Vice President / General Manager

4/7/03

Date

EPA/FOIA2018-00912

Attachment I

Pilot Flame Outages for Olefins I / II and GHU Flares

EPA/FOIA2018-00913

FLARE PILOT LIGHT OUTAGE REPORT
60.115b(d)(3)

Company Name : Formosa Corporation, Texas
Unit Description : EPN 8003B GHU Low Pressure Flare
Texas Permit No. : # 19168
PSD-TX Permit No. : PSD-TX-760M5

REPORTING PERIOD 01/01/03 TO 03/31/03

Date	Time	Problem Description
01/31/03	15:40 16:05	TRIPPED WHILE CHANGING FUEL GAS TO BURNERS ROUTED VENTS TO THE ELEVATED FLARE RE-STARTED
01/31/03	16:30 16:50	TRIPPED DUE TO LOW FUEL GAS PRESSURE ROUTED VENTS TO THE ELEVATED FLARE RE-STARTED
01/31/03	17:08 17:30	TRIPPED DUE TO LOW FUEL GAS PRESSURE ROUTED VENTS TO THE ELEVATED FLARE RE-STARTED

Annual Report for RY 2002

EPA/FOIA2018-00915

In RY 2002, FPC-TX reported on a quarterly basis any problems revealed by inspections during which detectable emissions were measured or a problem that could have resulted in emissions of benzene from a Subpart FF source. Note – all of the information was previously submitted in the Quarterly Reports for RY 2002.

Most of the situations had to do with the flares and a summary is attached. One table in the attachment, EPN 8003B GHU Low Pressure Flare for Reporting Period 10/01/02 to 12/31/02, has been updated to include two additional periods when a pilot light outage was noted. This table will serve as an update to the one submitted by letter dated January 7, 2003.

In addition to the flare tables, there were three other situations as described below:

On April 30, 2002, a carbon canister was not changed out per schedule in the Olefins I facility. Upon discovery of the problem, Method 21 air monitoring was performed on the outlet of the canisters. The air monitoring indicated non-detect for benzene and the canisters were immediately changed out.

In the Olefins I plant, the carbon cans were not changed out according to the pre-determined schedule as of a plant turn around occurring the first week of July. Although the Olefins plant was not in operation at the time, monitoring by Method 21 was initiated and it was determined that no detectable emissions resulted from not changing out the canisters that week.

Carbon canisters are scheduled to be changed out every three weeks. The week of October 10, 2002 the canisters in the Olefins II Unit for the Zimpro and caustic sumps were not replaced according to schedule, as there were none in stock. Once carbon canisters were in stock, they were replaced immediately in these two areas and are back on the three-week rotation.

Annual Report for RY 2002

Flare Summary

EPA/FOIA2018-00917

FLARE PILOT LIGHT OUTAGE REPORT
60.115b(d)(3)

Company Name : Formosa Corporation, Texas
Unit Description : EPN 8003B GHU Low Pressure Flare
Texas Permit No. : # 19168
PSD-TX Permit No. : PSD-TX-760M5

Reporting Period: 01/01/02 to 03/31/02

Date	Time	Problem Description
01/04/2002	15:56 THRU 16:20	Flare tripped on flame failure. Flare restarted immediately.
01/10/2002	09:10 THRU 10:51	Changed control system program to indicate cause of shutdown. This was a planned event and prior to shutdown, tank vents were routed to the Olefins I elevated flare and Zimpro lined to firebox.
02/12/2002	08:10 THRU 15:05	Instrument department worked on instrument panel This was a planned event and prior to shutdown, tank vents were routed to the Olefins I elevated flare and Zimpro lined to firebox.
02/11/2002	07:55 THRU 16:05	Instrument department changed out lights on light panel This was a planned event and prior to shutdown, tank vents were routed to the Olefins I elevated flare and Zimpro lined to firebox.
02/08/2002	13:03 THRU 13:07	A blower speed trip test was performed. This was a planned event and prior to shutdown, tank vents were routed to the Olefins I elevated flare and Zimpro lined to firebox.

FLARE PILOT LIGHT OUTAGE REPORT
40 CFR 60.665(l)(4), 60.705(l), and 60.115b(d)(3)

Company Name : Formosa Corporation, Texas
Unit Description : EPN 1018 Emergency Flare
Texas Permit No. : # 19168
PSD-TX Permit No. : PSD-TX-760M5

Reporting Period: 01/01/02 to 03/31/02

Date	Time	Problem Description
03/06/02	17:01 THRU 17:18	Flare tripped on flame failure. Flare restarted immediately.

EPA/FOIA2018-00919

FLARE PILOT LIGHT OUTAGE REPORT
40 CFR 60.665(l)(4), 60.705(l), and 60.115b(d)(3)

Reporting Period: 01-01-02 to 03-31-02

Company Name : Formosa Corporation, Texas
Unit Description : EPN 1067 Olefins II Emergency Flare
Texas Permit No. : # 19168
PSD-TX Permit No. : PSD-TX-760M5

Date	Time	Problem Description
N/A	N/A	No outages to report

FLARE PILOT LIGHT OUTAGE REPORT
60.115b(d)(3)

Reporting Period: 01-01-02 to 03-31-02

Company Name : Formosa Corporation, Texas
Unit Description : EPN 1087 Olefins II Plant Low Pressure Flare
Texas Permit No. : # 19168
PSD-TX Permit No. : PSD-TX-760M5

Date	Time	Problem Description
3/28/02	09:08 03/28/02 thru 20:11 03/28/02	Instrument modification

FLARE PILOT LIGHT OUTAGE REPORT
60.115b(d)(3)

Company Name : Formosa Corporation, Texas
Unit Description : EPN 8003B GHU Low Pressure Flare
Texas Permit No. : # 19168
PSD-TX Permit No. : PSD-TX-760M5

Reporting Period: 04/1/02 To 06/30/02

Date	Time	Problem Description
04/30/02	22:25 23:05	TROUBLESHOOT HIGH PRESSURE TANK VENTS WERE ROUTED TO THE OLEFINS I ELEVATED FLARE AND ZIMPRO LINED TO FURNACE FIREBOX RE-STARTED FLARE
05/13/02	9:53 9:58	BLOWER TRIPPED OUT STARTED STAND BY BLOWER AND RE-STARTED FLARE
05/20/02	11:15 22:30	TROUBLESHOOT TANK VENTS WERE ROUTED TO THE OLEFINS I ELEVATED FLARE AND ZIMPRO LINED TO FURNACE FIREBOX
05/30/02	10:55 11:25	FLARE TRIPPED ON FLAME FAILURE TANK VENTS WERE ROUTED TO THE OLEFINS I ELEVATED FLARE AND ZIMPRO LINED TO FURNACE FIREBOX FLARE RE-STARTED
06/09/02 06/16/02	13:30 14:25	FLARE SHUTDOWN AND PURGED TO OLEFINS ELEVATED FLARE FOR DCS UP-GRADE FLARE RE-STARTED
06/18/02 06/19/02	18:26 0:10	FLARE TRIPPED ON FLAME FAILURE TANK VENTS WERE ROUTED TO THE OLEFINS I ELEVATED FLARE AND ZIMPRO LINED TO FURNACE FIREBOX FLARE RE-STARTED
06/26/02 06/27/02	13:10 1:39	POWER OUTAGE TANK VENTS WERE ROUTED TO THE OLEFINS I ELEVATED FLARE AND ZIMPRO LINED TO FURNACE FIREBOX FLARE RE-STARTED
06/28/02	15:05 15:51	SHUT DOWN TO RE-PLACE FUEL REGULATOR TANK VENTS WERE ROUTED TO THE OLEFINS I ELEVATED FLARE AND ZIMPRO LINED TO FURNACE FIREBOX FLARE RE-STARTED

Company Name : Formosa Corporation, Texas
Unit Description : EPN 1018 Emergency Flare
Texas Permit No. : # 19168
PSD-TX Permit No. : PSD-TX-760M5

Reporting Period: 04/1/02 To 06/30/02

Date	Time	Problem Description
06/13/02 06/24/02	11:07 10:00	TURNAROUND FLARE TIP REPLACEMENT RE-STARTED THE FLARE

FLARE PILOT LIGHT OUTAGE REPORT
40 CFR 60.665(l)(4), 60.705(l), and 60.115b(d)(3)

Reporting Period: 04/1/02 To 06/30/02

Company Name : Formosa Corporation, Texas
Unit Description : EPN 1051 Olefins Plant Low Pressure Flare
Texas Permit No. : # 19168
PSD-TX Permit No. : PSD-TX-760M5

Date	Time	Problem Description
04/20/02	0:50 0:55	Flare tripped on flame failure. Flare restarted immediately.
04/21/02	1:10 1:18	Flare tripped on flame failure. Flare restarted immediately.
04/21/02	18:16 18:20	Flare tripped on flame failure. Flare restarted immediately.
04/22/02	2:12 2:20	Flare tripped on flame failure. Flare restarted immediately.
04/22/02	18:19 18:22	Flare tripped on flame failure. Flare restarted immediately.
04/22/02	22:44 22:47	Flare tripped on flame failure. Flare restarted immediately.
04/25/02	0:30 0:33	Flare tripped on flame failure. Flare restarted immediately.
04/24/02	18:20 18:25	Flare tripped on flame failure. Flare restarted immediately.
04/25/02	7:00 7:15	Flare tripped on flame failure. Flare restarted immediately.
04/26/02	12:45 12:50	Flare tripped on flame failure. Flare restarted immediately.

04/26/02	6:04 6:06	TRIPPED ON FLAME FAILURE FLARE RE-STARTED IMMEDIATELY
04/26/02	10:39 10:49	TRIPPED ON FLAME FAILURE FLARE RE-STARTED
04/26/02	13:35 16:35	REPLACE THE STACK RE-STARTED THE FLARE

FLARE PILOT LIGHT OUTAGE REPORT
40 CFR 60.665(l)(4), 60.705(l), and 60.115b(d)(3)

Company Name : Formosa Corporation, Texas
Unit Description : EPN 1067 Olefins II Emergency Flare
Texas Permit No. : # 19168
PSD-TX Permit No. : PSD-TX-760M5

Reporting Period: 04-01-02 to 06-30-02

Date	Time	Problem Description
N/A	N/A	No outages to report

FLARE PILOT LIGHT OUTAGE REPORT
60.115b(d)(3)

Company Name : Formosa Corporation, Texas
Unit Description : EPN 1087 Olefins II Plant Low Pressure Flare
Texas Permit No. : # 19168
PSD-TX Permit No. : PSD-TX-760M5

Reporting Period: 04-01-02 to 06-30-02

Date	Time	Problem Description
4/15/2002 to 4/16/02	18:50 04/15/02 thru 01:45 04/16/02	Instrument replacement

EPA/FOIA2018-00925

FLARE PILOT LIGHT OUTAGE REPORT
40 CFR 60.115b(d)(3)

Reporting Period: 07/1/02 To 09/30/02

Company Name : Formosa Corporation, Texas
Unit Description : EPN 8003B GHU Low Pressure Flare
Texas Permit No. : # 19168
PSD-TX Permit No. : PSD-TX-760M5

Date	Time	Problem Description
07/03/02	01:53 through 02:15	Flame outage due to low fuel gas. Restarted flare.
07/03/02	07:15 through 07:30	PLC's tripped. Reset PLC's and restarted flare.
08/03/02	06:00 through 06:10	Pilot failure. Restarted flare.
08/30/02	17:30 through 23:30	Flame failure. Routed flow to fire boxes and elevated flare. Cleaned fire eye and restarted flare.
09/11/02	05:40 through 21:03	Flame failure. Routed flow to fire boxes and elevated flare. Flare restarted after failed attempt.
09/22/02	03:20 through 03:25	Flame failure due to high stack temperature. Restarted flare.

FLARE PILOT LIGHT OUTAGE REPORT
40 CFR 60.665(f)(4), 60.705(l), and 60.115b(d)(3)

Company Name : Formosa Corporation, Texas
Unit Description : EPN 1051 Olefins Plant Low Pressure Flare
Texas Permit No. : # 19168
PSD-TX Permit No. : PSD-TX-760M5

Reporting Period: 07/1/02 To 09/30/02

Date	Time	Problem Description
07/03/02	19:16 through 21:03	Refractory fell on pilot. Removed refractory. Restarted flare.

Company Name : Formosa Corporation, Texas
Unit Description : EPN 1018 Emergency Flare
Texas Permit No. : # 19168
PSD-TX Permit No. : PSD-TX-760M5

Reporting Period: 07/1/02 To 09/30/02

Date	Time	Problem Description
07/01/02 through 07/02/02	21:30 through 03:30	Shutdown to repair steam line leak. All systems locked out going to flare. Shutdown occurred during unit shutdown. Restarted flare.
O7/03/02	01:36 through 02:08	Pilot outage due to too much steam flow. Shutdown occurred during unit shutdown. Restarted flare.

FLARE PILOT LIGHT OUTAGE REPORT
40 CFR 60.665(l)(4), 60.705(l), and 60.115b(d)(3)

Company Name : Formosa Corporation, Texas
Unit Description : EPN 1067 Olefins II Emergency Flare
Texas Permit No. : # 19168
PSD-TX Permit No. : PSD-TX-760M5

Reporting Period: 07-01-02 to 09-30-02

Date	Time	Problem Description
9/6/02	11:45 09/06/02 thru 12:00 09/06/02	Unable to relight pilot

FLARE PILOT LIGHT OUTAGE REPORT
60.115b(d)(3)

Company Name : Formosa Corporation, Texas
Unit Description : EPN 1087 Olefins II Plant Low Pressure Flare
Texas Permit No. : # 19168
PSD-TX Permit No. : PSD-TX-760M5

Reporting Period: 07-01-02 to 09-30-02

Date	Time	Problem Description
N/A	N/A	No outages to report

FLARE PILOT LIGHT OUTAGE REPORT
60.115b(d)(3)

Company Name : Formosa Corporation, Texas
Unit Description : EPN 8003B GHU Low Pressure Flare
Texas Permit No. : # 19168
PSD-TX Permit No. : PSD-TX-760M5

Reporting Period: 10/01/02 To 12/31/02

Date	Time	Problem Description
10/02/02	06:31 06:44	HIGH STACK TEMP.--FLAME FAILURE FLARE RE-STARTED
11/20/02	09:30 10:02	FLAME FAILURE FLARE RE-STARTED
11/21/02	04:58 16:30	PLANNED OUTAGE - CHANGE OUT OF FLARE STACK EVERYTHING ROUTED TO THE ELEVATED FLARE. FLARE RE-STARTED.
11/22/02	14:45 16:10	INSTRUMENT WORK ON T.E. FLARE RE-STARTED
11/29/02	14:35 15:25	FLAME FAILURE - HIGH TEMP. FLOWS ROUTED TO THE ELEVATED FLARE FLARE RE-STARTED
12/05/02	09:16 16:03	FLAME FAILURE-ATTEMPTED TO PUT ZIMPRO TO THE FLARE. FLOWS ROUTED TO THE ELEVATED FLARE. FLARE RE-STARTED
12/06/02 12/07/02	18:20 03:45	FLAME FAILURE - ATTEMPTED TO ROUTE ZIMPRO FROM FIRE BOX TO THE FLARE.--ROUTE TANK VENTS TO THE ELEVATED FLARE & ZIMPRO BACK TO FIRE BOX. FLARE RE-STARTED
12/11/02	14:41 16:07	FLAME FAILURE- FLOWS ROUTED TO THE FIRE BOX AND ELEVATED FLARE FLARE RE-STARTED
12/12/02	09:44 15:30	FLAME FAILURE FLARE RE-STARTED
12/12/02	18:15 18:39	FLAME FAILURE - HIGH STACK TEMP. FLOWS ROUTED TO ELEV. FLARE & FIRE BOX FLARE RE-STARTED
12/23/02	21:18 21:42	FLAME FAILURE FLARE RE-STARTED
12/29/02	15:45 16:09	FLAME FAILURE FLOWS ROUTED TO ELEV. FLARE & FIRE BOX FLARE RE-STARTED

FLARE PILOT LIGHT OUTAGE REPORT
40 CFR 60.665(l)(4), 60.705(l), and 60.115b(d)(3)

Company Name : Formosa Corporation, Texas
Unit Description : EPN 1051 Olefins Plant Low Pressure Flare
Texas Permit No. : # 19168
PSD-TX Permit No. : PSD-TX-760M5

Reporting Period: 10/01/02 To 12/31/02

Date	Time	Problem Description
11/02/02	6:18 8:10	INTERLOCK - 3T TRIPPED FLAME FAILURE INSTRUMENTS RE-SET , RE-STARTED FLARE
11/22/02	7:45 15:00	PLANNED OUTAGE - STACK REPLACEMENT AND PM'S REPAIRS MADE. FLARE RE-STARTED
12/19/02	8:53 8:56	SHUT DOWN FOR TESTING OF THE DCS ALARM FLARE RE-STARTED

FLARE PILOT LIGHT OUTAGE REPORT
40 CFR 60.665(l)(4), 60.705(l), and 60.115b(d)(3)

Company Name : Formosa Corporation, Texas
Unit Description : EPN 1067 Olefins II Emergency Flare
Texas Permit No. : # 19168
PSD-TX Permit No. : PSD-TX-760M5

Reporting Period: 10/01/02 to 12/31/02

Date	Time	Problem Description
10/23/02	10:00 10/23/02 through 13:00 10/23/02	Ignition failure. Relit pilots after clearing alarms

FLARE PILOT LIGHT OUTAGE REPORT
60.115b(d)(3)

Company Name : Formosa Corporation, Texas
Unit Description : EPN 1087 Olefins II Plant Low Pressure Flare
Texas Permit No. : # 19168
PSD-TX Permit No. : PSD-TX-760M5

Reporting Period: 10/01/02 to 12/31/02

Date	Time	Problem Description
10/29/02	10:22 10/29/02 through 10:25 10/29/02	Maintenance work. Flare restarted once completed.
12/15/02	17:17 12/15/02 through 20:50 12/15/02	Flare tripped due to low pressure. Flare restarted

Total Annual Benzene (TAB) Report for RY 2002

EPA/FOIA2018-00932

2002 WASTE STREAMS SUBJECT TO TAB CALCULATIONS

Requirement	Olefins I Spent Caustic	Olefins I Dilution Steam	Olefins I Flare Drum Condensate	Olefins I Tank Dewatering Activities
Is the waste stream controlled for benzene in accordance with Subpart FF?	Yes	Yes	Yes	Yes
Is the water content of the waste stream > 10%?	Yes	Yes	Yes	Yes
Is the waste stream a process wastewater?	Yes	Yes	Yes	No
Is the waste stream a product tank drawdown?	No	No	No	Yes
Is the waste stream a landfill leachate?	No	No	No	No
What is the annual waste quantity for the waste stream?	25,795 Mg / year	94,139 Mg / year	761 Mg / year	34 Mg / year
What are the ranges of the benzene concentration for the waste stream?	288 - 805 ppm	0.01 – 0.60 ppm	1.0 – 11.0 ppm	285 – 324 ppm
What is the annual average flow-weighted benzene concentration for the waste stream?	534 ppm	0.22 ppm	6.4 ppm	306 ppm
What is the annual benzene quantity for the waste stream?	13.77 Mg / year	0.02 Mg / year	0.004 Mg / year	0.01 Mg / year

Total Annual Benzene (TAB) for Olefins I for RY 2002 = 13.81 Mg / year

CAA-Appendix S
EPA/FOIA2018-00933
VP0614

2002 WASTE STREAMS SUBJECT TO TAB CALCULATIONS

Requirement	Olefins II Spent Caustic	Olefins II Dilution Steam	Olefins II Flare Drum Condensate	Olefins II Tank Dewatering Activities
Is the waste stream controlled for benzene in accordance with Subpart FF?	Yes	Yes	Yes	Yes
Is the water content of the waste stream > 10%?	Yes	Yes	Yes	Yes
Is the waste stream a process wastewater?	Yes	Yes	Yes	No
Is the waste stream a product tank drawdown?	No	No	No	Yes
Is the waste stream a landfill leachate?	No	No	No	No
What is the annual waste quanilty for the waste stream?	28,333 Mg / year	213,163 Mg / year	594 Mg / year	0.0 Mg / year
What are the ranges of the benzene concentration for the waste stream?	454 - 523 ppm	2 - 27 ppm	326 - 736 ppm	N/A; no activities in RY 2002
What is the annual average flow-weighted benzene concentration for the waste stream?	477 ppm	12 ppm	495 ppm	N/A; no activities in RY 2002
What is the annual benzene quantity for the waste stream?	13.50 Mg / year	2.58 Mg / year	0.29 Mg / year	0.0 Mg / year

Total Annual Benzene (TAB) for Olefins II for RY 2002 = 16.37 Mg / year

TAB for Olefins I and II = 30.18 Mg / year