TPDES Permit No. 10137-033

Dos Rios WRC

Flow Diagram
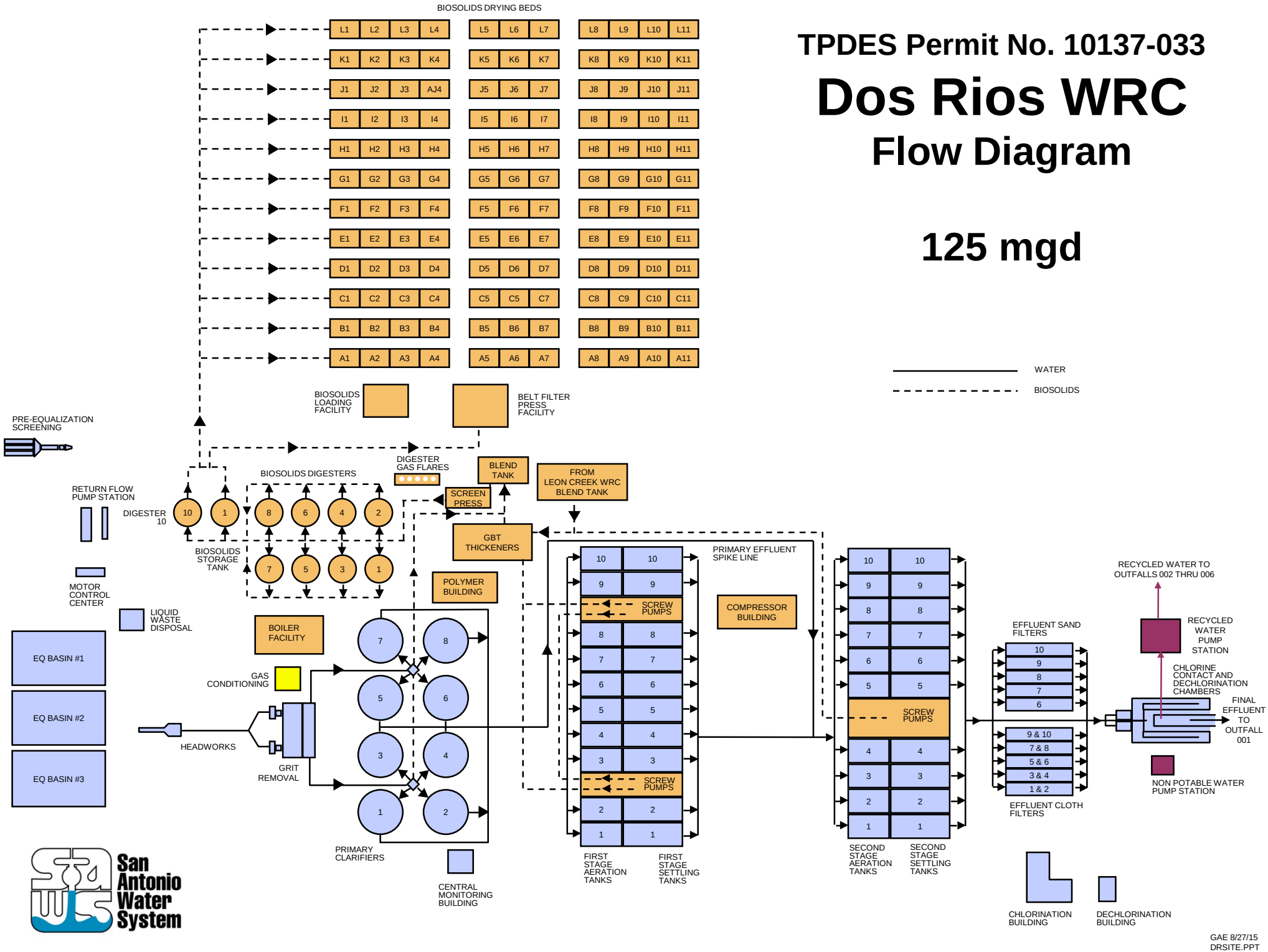
125 mgd