RECEIVE
2 5 2005
Air/Toxics & Inspection Coordination Branch 6EN-A

FILE CODE - THIS MUST BE FILLED IN BY THE REGION. (1) State

File Series/TCEQ ID/File Code:	IWD/02436-000/CO
County Name, if no TCEQ ID:	

UNITED STATES ENVIRONMENTAL PROTECTION AGENCY
Washington, D.C. 20460

NPDES Compliance Inspection Report

Form Approved
OMB No. 2040-0003
Approval Expires 7-31-85

Section A: National Data System Coding

Transaction Code	NPDES	yr/mo/day	Inspec. Type	Inspector	Fac Type
1 N 2 5 3	T X 0 0 8 5 5 7 0 11	12 0 5 0 5 2 7 17	18 C	19 S	20 2

Remarks: T P D E S # W Q 0 0 0 2 4 3 6 - 0 0 0

Inspection Work Days: 67 69 | Facility Evaluation Rating: 70 4 | BI: 71 N | QA: 72 N | 73 74 | Reserved: 75 80

Section B: Facility Data

Name and Location of Regulated Entity Inspected *(For industrial users discharging to POTW, also include POTW name and NPDES permit number)*	Entry Time /Date	Permit Effective Date
Formosa Plastics Corporation, Texas 201 Formosa Drive Point Comfort, Texas 77978	08:30, 05/05/24	01/05/31
	Exit Time/Date 14:00, 05/05/27	Permit Expiration Date 05/01/01

Name(s) of On-Site Representative(s)/Title(s)/Phone and Fax Number(s)
Mr. Mike Rivet, EHS Manager, (361) 987-7000, fax (361) 987-2363
Mr. Kelly Long, Environmental Engineering Staff, (361) 987-7463, fax (361) 987-2363

Other Facility Data

RECEIVED
JUL 28 2005
6W-EA (1)

Name, Address of Responsible Official/Title/Phone and Fax Number
Mr. R.P. Smith, Vice President/General Manger
P.O. Box 700
Point Comfort, Texas 77978
(361) 987-7000, fax (361) 987-2363

Contacted: Yes [ ] No [X]

Section C: Areas Evaluated During Inspection

(S = Satisfactory, M = Marginal, U = Unsatisfactory, N = Not Evaluated)

S	Permit	S	Flow Measurement	S	Operations & Maintenance	N	CSO/SSO
S	Records/Reports	S	Self-Monitoring Program	S	Sludge Handling/Disposal	N	Pollution Prevention
S	Facility Site Review	N	Compliance Schedules	N	Pretreatment	N	Multimedia
M	Effluent/Receiving Waters	S	Laboratory	N	Storm Water	N	Other:

Section D: Summary of Findings/Comments (Attach additional sheets if necessary)

Effluent/Receiving Waters: Self-reported effluent data shows an exceedance for phenol daily maximum loading at Outfalls 001 and 101 in May 2004, and an exceedance for CBOD daily maximum concentration at Outfall 001 in December 2004. Refer to Alleged Violation Tracking No. 211512 in the Attached TCEQ CCEDS Investigation Report for further information.

Name(s) and Signature(s) of Inspector(s)	Agency/Office/Telephone/Fax	Date
Shea Ladner	TCEQ, Region 14, (361) 825-3125, fax (361) 825-3101	7/19/05
Signature of Management QA Reviewer Sinoel B. Contreras	Agency/Office/Phone and Fax Numbers TCEQ, Region 14, (361) 825-3100, fax (361) 825-3101	Date 7/21/05

EPA Form 3560-3 (Rev. 9-94) Previous editions are obsolete.

Texas Co...nission on Environm...tal Quality
Investigation Report
FORMOSA PLASTICS CORPORATION TEXAS
CN600130017

FORMOSA POINT COMFORT PLANT
RN100218973

Investigation # 400202

Incident #

Investigator: SHEA LADNER

Site Classification
INDUSTRIAL MAJOR

Conducted: 05/24/2005 -- 05/27/2005

SIC Code: 2821
NAIC Code: 325211

Program(s): WASTEWATER

Investigation Type : Compliance Investigation

Location : Located at the intersection of FM 1593 and Hwy 35, extending 1.8 miles north on the east side of FM 1593 and 1.7 miles east on the north side of Hwy 35.

Additional ID(s) : TX0085570
WQ0002436000

Address: 201 FORMOSA DRIVE GATE 3; POINT COMFORT, TX 77978

Activity Type : REGION 14 - CORPUS CHRISTI
WWCCIMDMAJ - WW CCI Mandatory Major

Principal(s) :

Role	Name
RESPONDENT	FORMOSA PLASTICS CORPORATION TEXAS

Contact(s) :

Role	Title	Name	Phone	
Participated in Investigation	MANAGER, COMBINED WATER TREATMENT PLANT	MR JOHN HYAK	Work	(361) 987-7450
Participated in Investigation	ENVIRONMENTAL HEALTH & SAFETY MANAGER	MR MIKE RIVET	Work	(361) 987-7000
Regulated Entity Contact	ENVIRONMENTAL ENGINEERING STAFF	MR KELLY LONG		(361) 987-2363
			Work	(361) 987-7463
Regulated Entity Mail Contact	VICE PRESIDENT/GENERAL MANAGER	MR R.P. SMITH	Work	(361) 987-7000
				(361) 987-2363

Other Staff Member(s) :

Role	Name
QA REVIEWER	JOHN DELEON
SUPERVISOR	SINOEL CONTRERAS

Associated Check List

Checklist Name	Unit Name
WQ GENERAL CCI CHECKLIST	general
WQ INDUSTRIAL CCI	industrial

Investigation Comments :

INTRODUCTION
The Formosa Plastics Corporation Texas wastewater treatment plant was investigated on May 24 and 27, 2005 to determine compliance with applicable wastewater treatment regulations. The facility was notified of the investigation on May 17, 2005. This investigation is considered a mandatory major Comprehensive Compliance Investigation (CCI). An exit interview, explaining the results of

the investigation, was conducted on May 6, 2004 with Mr. Mike Rivet, EHS Manager, and Mr. Kelly Long, Environmental Engineer. A copy of the Investigation Notes Related to Potential Violations was submitted to Mr. Long via facsimile on July 19, 2005. The signed copy can be found in this report as Attachment 1. A Notice of Violation letter was issued to facilitate and acknowledge compliance.

GENERAL FACILITY AND PROCESS INFORMATION
Formosa Plastics Corporation, Texas (FPC-TX) manufactures organic and inorganic chemicals, plastics, and synthetic fibers. Formosa's Combined Wastewater Treatment Plant (CWTP) is permitted to discharge remediated groundwater and combined internal wastewater streams at a daily average flow not to exceed 9.7 MGD at Outfall 001. The CWTP consists of a three-train biological treatment process, a physical treatment process, and a sanitary treatment package plant. Two internal outfalls, Outfall 101 and Outfall 201, commingle prior to discharge at Outfall 001. A simplified block overview of the treatment process is provided in this report as Attachment 2.

Effluent from Outfall 101 consists of process wastewater, storm water, and utility wastewater treated in two of the biological trains (A and B trains) of the CWTP. Effluent from Outfall 201 consists of utility and IEM wastewater streams treated in the physical treatment train of the CWTP. Treated domestic wastewater and treated process PVC wastewater from one of the biological trains (C-train) are recycled for use as cooling tower make-up water. Schematics of the biological treatment process and the physical treatment process are provided in this report in Attachments 3 and 4, respectively.

Outfalls 002 through 012 are authorized for the discharge of non-process area storm water, hydrostatic test water, fire water, non-contact steam condensate, and non-contact wash water. Outfalls 001 and 011 discharge via pipeline to Lavaca Bay/Chocolate Bay in Segment No. 2453 of the Bays and Estuaries. Outfalls 002 through 010 and Outfall 012 discharge to unnamed tributaries, thence to Cox Creek, thence to Cox Creek Lake, thence to Cox Bay in Segment No. 2454 of the Bays and Estuaries. The water quality permit for this facility was issued on May 31, 2001 and expired on January 1, 2005. FPC-TX submitted a permit renewal application within the required 180 day deadline; therefore Formosa will continue to operate under the expired water quality permit until a new permit is issued.

Effluent samples were collected from Outfalls 001 and 101 during the investigation. Sample analysis results for wet chemistry and metals were not available from the TCEQ Houston Laboratory on the date of this report due to the metals instrument being down for maintenance. These sample results will be evaluated for compliance when they are received. Sample analysis results for Hexavalent Chromium, VOCs, and Semi-Volatiles and the chains of custody are attached to this report in Attachments 5 and 6, respectively. Sample results were compliant with the permit limits. Outfall 001 discharges via a pipeline several hundred feet into and below the surface of Lavaca Bay; therefore, the receiving water could not be observed.

The primary flow measuring devices for Outfalls 001, 101, and 201 are magnetic closed conduit flow meters. A flow accuracy check cannot be performed on these types of meters. In-house technicians calibrate the flow meters once per month. At the time of the investigation, the most recent calibration was performed on May 11, 2005.

Effluent samples are collected by FPC-TX plant operators and analyzed by the in-house laboratory for all permit required parameters. At Outfalls 001, 101, and 201, field measurements of pH, dissolved oxygen, and temperature are analyzed by in-line equipment. At Outfalls 002 through 012, pH is measured by the in-house laboratory. Biomonitoring analyses are performed by PBS&J Laboratory in Houston, Texas.

BACKGROUND
A file review was conducted prior to the investigation date. Self-reported effluent data was reviewed for the period between May 2004 and April 2005. Two effluent excursion were noted for phenol daily maximum loading at Outfalls 101 and 001 during May 2004. One effluent excursion was also noted for CBOD daily maximum concentration at Outfall 001 during December 2004. Please refer to the Summary of Investigation Findings for further information.

ADDITIONAL INFORMATION

All required records were reviewed on-site during the investigation. The records included lab analyses, QA/QC data, Discharge Monitoring Reports (DMR's), noncompliance notifications, biomonitoring data, flow meter and in-line instrument calibration logs, diffuser maintenance data (Outfall 001), Lavaca Bay depth logs, process control data, sludge disposal records, the annual groundwater monitoring report, and the annual receiving water report. All records were well-maintained. FPC-TX performs random checks of the DMR calculations each month for quality control purposes.

Influent from each of the process units is sampled twice per day for process control purposes. Various other units in the CWTP are sampled daily as well. Off-spec wastewater is stacked in the process units' storage tanks so the CWTP operators can control the feed of the off-spec water into the treatment process. The operators also maintain a log of MLSS, 30-minute settling tests, and clarifier sludge blankets in the biological treatment process.

Potassium is monitored prior to discharge at Outfall 001. FPC-TX believes that potassium may have been the cause of some past failures of biomonitoring tests. Formosa has set an internal limit for potassium in the effluent. FPC-TX has scheduled a meeting with Mr. Mike Pfeil, TCEQ Biomonitoring Team, to discuss adding an ion protocol to the biomonitoring procedures in order to eliminate potassium interference in the biomonitoring tests.

Sludge from the biological and physical treatment processes are dewatered by two belt presses. Approximately two loads (13 - 16 short tons each) of dewatered sludge are transported three times per week by a registered hauler (Bealine Services Company, Inc.) to the Waste Management Coastal Plains landfill in Alvin, Texas.

A walk-through of the CWTP revealed that operations and maintenance was satisfactory. The entire CWTP is contained with concrete berms. Rainfall, overflows, and spills which occur in the contained area are drained to the head of the CWTP for treatment. Treatment units appeared to be well-maintained. The floating aerators in one of the sludge digesters have been out of service for several years; however, air is supplied from an external source.

Storm water outfalls 002 through 012 were observed during the investigation. All storm water outfalls are checked by FPC-TX personnel twice per day. Each of the outfalls is equipped with a gate which remains shut until the water is sampled and found to meet the permitted limits. None of the outfalls were discharging at the time of observation; however, some of the storm water conveyances contained water from a recent rainfall. Outfall 006 was observed to be full with a slight sheen visible on the surface. The outfall gate was closed and Formosa personnel were called to vacuum and clean the ditch. Mr. Long indicated that a fire hydrant had been run over by a truck in a loading area, and that the water and the sheen were likely from the accident clean-up. Outfall 008 also had storm water stacked in the conveyance ditch. The water was covered with a heavy sheen and vacuum trucks were on-site to remove the storm water for treatment in the CWTP. None of the water was discharged. After an investigation, it was determined that the sheen was caused by hydraulic fluid which had leaked from a locomotive in the drainage area. The locomotive was repaired and the spill was mitigated appropriately.

The FPC-TX in-house laboratory participates in the EPA's DMR-QA program, which is a laboratory proficiency performance test. Analytes of unknown concentrations are submitted to participating laboratories for analyses and evaluation. FPC-TX submitted acceptable results for all analytes during the most recent evaluation.

NOV Date	Method
07/21/2005	WRITTEN

ALLEGED VIOLATIONS NOTED AND RESOLVED

Track No: 211825 **Resolution Date: 7/21/2005**

30 TAC Chapter 305.125(1)
PERMIT TPDES Permit No. WQ0002436-000
Effluent Limitations and Monitoring Requirements, Pages 2 and 2b, Provision No. 1

Alleged Violation:

Investigation: 400202 Comment Date: 07/21/2005

Failure to maintain the effluent quality within the permitted limits.

Self-monitored effluent data was reviewed for the period between May 2004 and April 2005. Two effluent excursions were noted for phenol daily maximum loading at Outfalls 101 and 001 during May 2004. The facility reported 2.16 lbs/day at Outfall 101 and 2.31 lbs/day at Outfall 001. The permitted daily maximum loading for phenols is 0.68 lbs/day and 0.74 lbs/day, respectively.

One effluent excursion was also noted for CBOD daily maximum concentration at Outfall 001 during December 2004. The facility reported a CBOD daily maximum concentration of 39 mg/l, which exceeds the permitted limit of 34 mg/l.

Recommended Corrective Action: Effluent shall be adequately treated so as to meet the permitted limits for each monitored parameter.

Resolution: The facility submitted noncompliance notifications for each of the effluent violations. Investigations were performed to determine the causes of the effluent excursions, and corrective measures were taken to ensure future compliance. The facility has not had any further effluent quality problems for the above-referenced parameters. No further information is requested regarding this issue.

Please be aware that effluent violations may still be subject to enforcement, including penalties, upon review by the Enforcement Division.

Signed _____ **Date** 7/21/05
Environmental Investigator

Signed _____ **Date** 7/21/05
Supervisor

Attachments: (in order of final report submittal)

___Enforcement Action Request (EAR)
✓ Letter to Facility (specify type) : NOV
Investigation Report
✓ Sample Analysis Results, Attach. Nos. 5 & 6
___Manifests
___NOR

✓ Maps, Plans, Sketches, Attach. Nos. 2, 3, & 4
___Photographs
___Correspondence from the facility
✓ Other (specify) :
Exit Interview Form, Attach. No. 1

Investigation Notes Related to Potential Violations and/or Records Request

Regulated Entity/Site Name	Formosa Plastics Corp., Texas			TCEQ Site ID No. / RN No. (optional)	02436-000
Investigation Type	CCI	Contact Made In-House (Y/N) N	Purpose of Investigation	Annual / EPA Mandatory	
Regulated Entity Contact	Kelly Long		Telephone No.	(361) 987-7463	Date Contacted
Title	Env. Engineer		Fax No.	(361) 987-2363	Date Faxed 7/14/05

NOTICE: The information provided in this Note is intended to provide clarity to issues that have arisen to the date of this Note during the investigation process between the agency and the company and *does not represent agency findings related to violations.* Any potential or alleged violations discovered after the date of this Note will be communicated by telephone to the regulated entity representative prior to the issuance of a notice of violation or enforcement. Conclusions drawn from this investigation, including additional violations or potential violations discovered (if any) during the course of this investigation, will be documented in this investigation's final report.

Issue			
		For Records Request, identify the necessary records, the company contact and date due to the agency. For Alleged and Potential Violations/Issues, include the rule citation with the clearly described potential problem. Other type of issues, fully describe.	
No.	Type	Rule Citation (if known)	Description of Issue
1	AV	TPDES Permit, Pg. 2 + 2a	Failure to meet permit limits - Outfall 101 in May 2004 for phenol daily max; Outfall 001 in May 2004 for phenol daily max; Outfall 001 in Dec. 2004 for CBOD daily

Note 1: Issue Type Can Be One or More of: AV (Alleged Violation), PV (Potential Violation), O (Other), or RR (Records Request)

Attachment No. 1

Document Acknowledgment. Signature on this document establishes only that the regulated entity (company) representative received a copy of this document and associated pages on the date noted. If contact was made by telephone, document will be faxed to regulated entity; therefore, signature not required.

Shea Lactor	7/14/05	Kelly J. Long	Kelly J. Long	7/19/05
Investigator Name (Signed & Printed)	Date	Regulated Entity Representative Name (Signed & Printed)		Date

If you have questions about any information on this form, please contact your local TCEQ Regional Office.
Individuals are entitled to request and review their personal information that the agency gathers on its forms. They may also have any errors in their information corrected. To review such information, call 512/239-328

COPIES: Original: for Regulated Entity Representative, Copy: TCEQ
TCEQ- 20085 (02-19-04)

(Note: use additional pages as necessary) Page 1 of 1

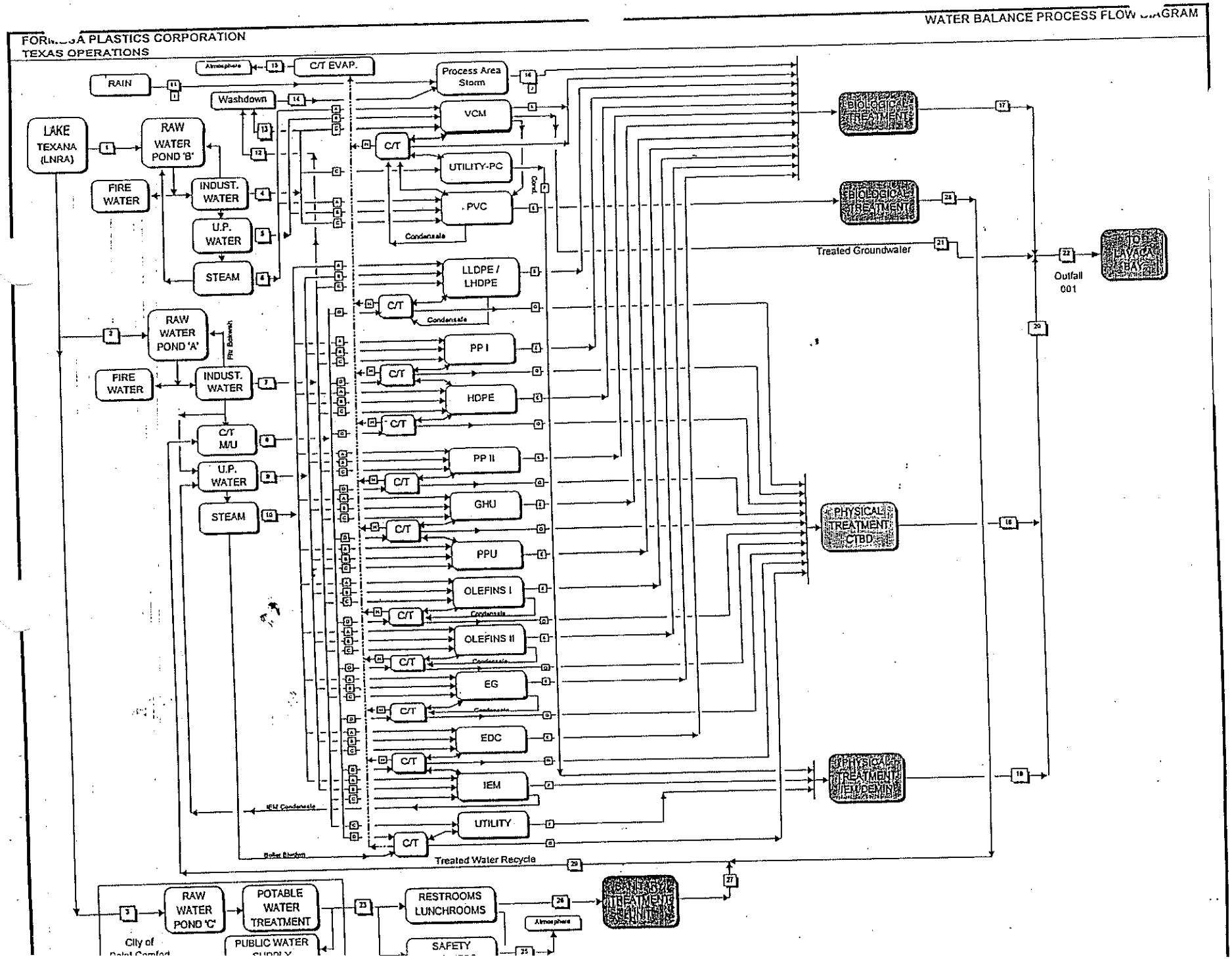

Attachment No. 2

FORMOSA UTILITY VENTURE LTD.

STANDARD OPERATING PROCEDURE
PROCESS FLOW DIAGRAM: T.1.3.1

REVISI

Attachment No. 3

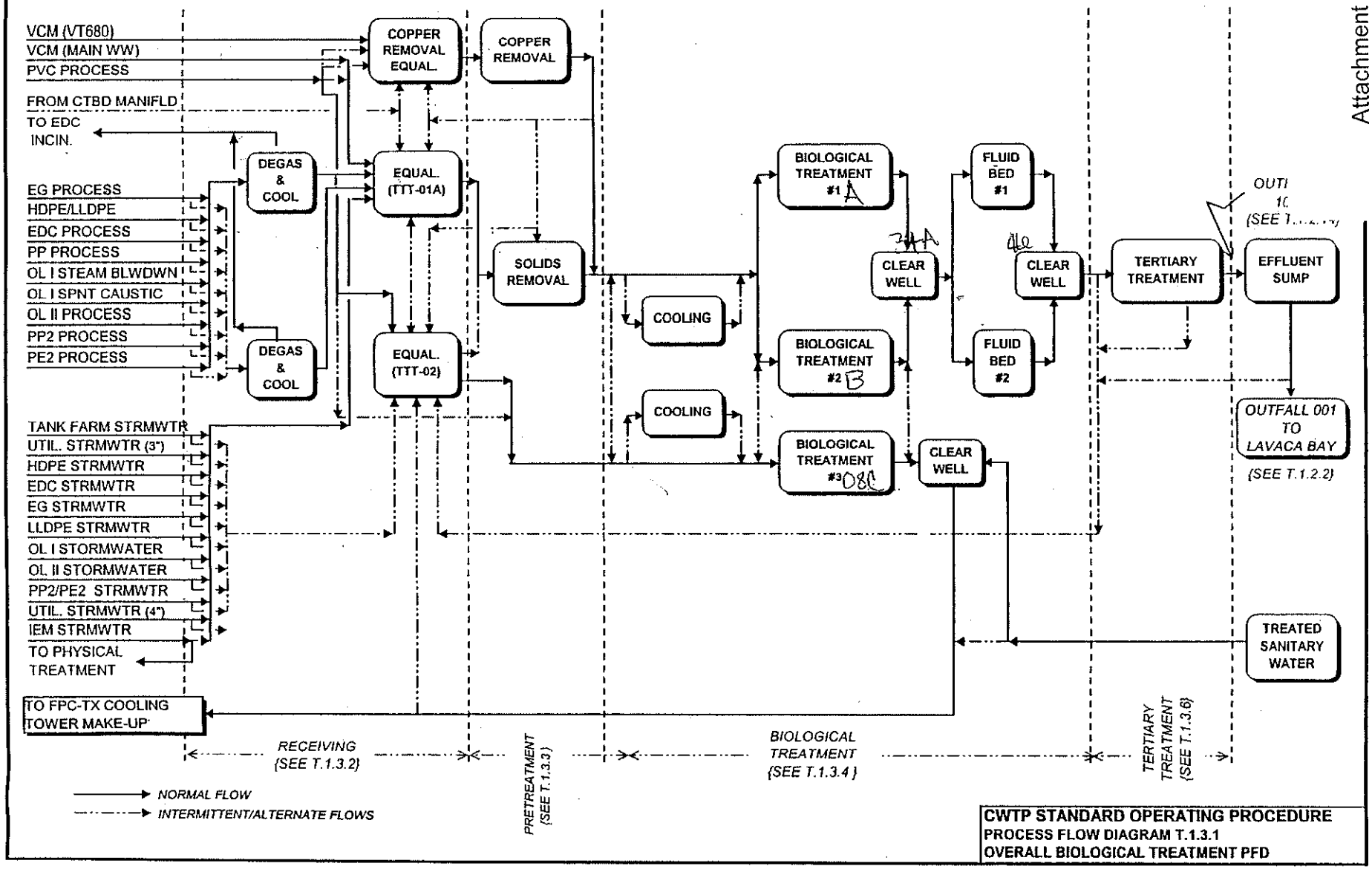

CWTP STANDARD OPERATING PROCEDURE
PROCESS FLOW DIAGRAM T.1.3.1
OVERALL BIOLOGICAL TREATMENT PFD

Attachment No. 4

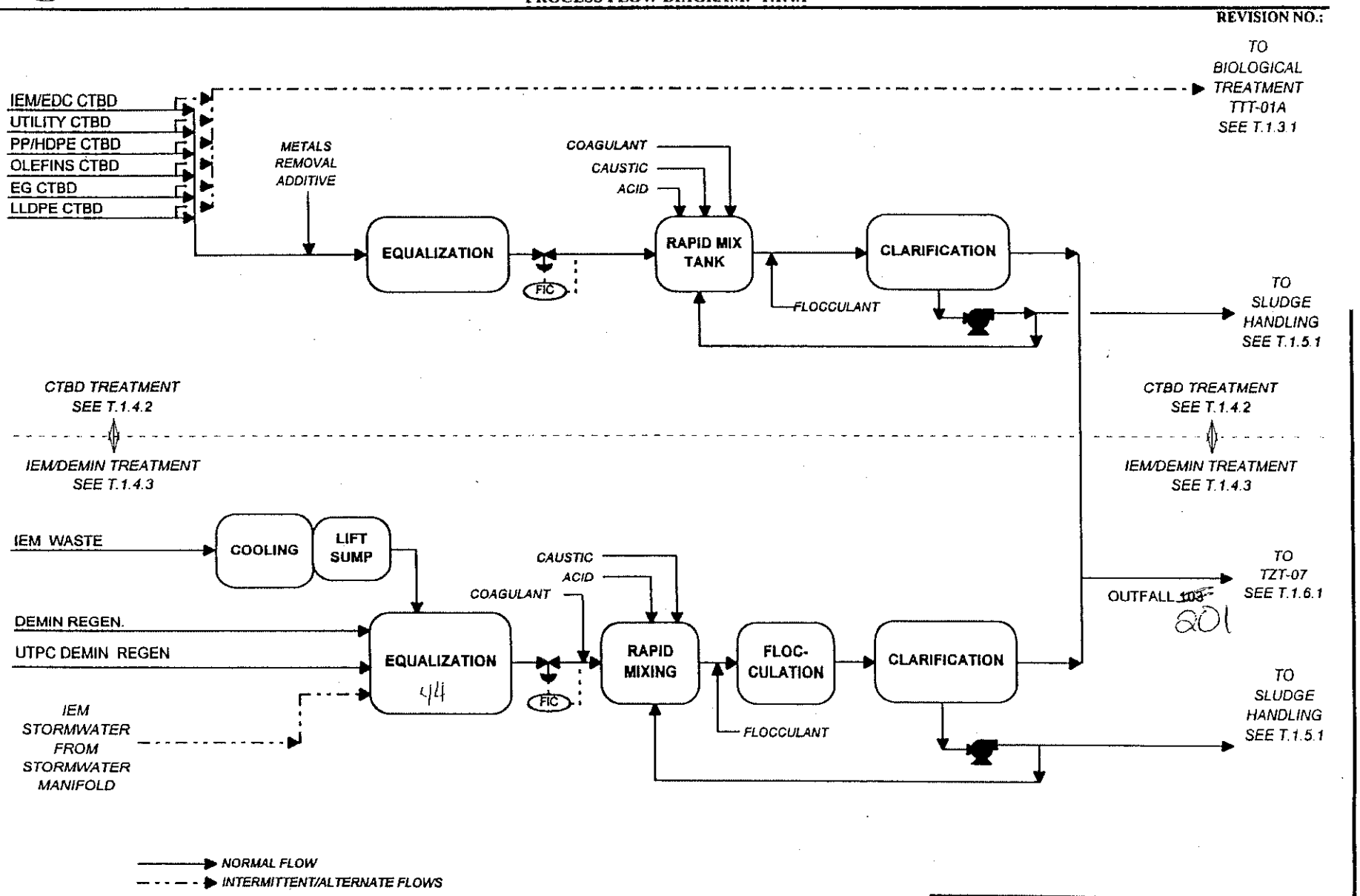

CWTP STANDARD OPERATING PROCEDURE
PROCESS FLOW DIAGRAM T.1.4.1
PHYSICAL TREATMENT OVERALL PFD

INVESTIGATION SAMPLE RESULTS

Regulated Entity Name: Formosa Plastics Corporation, Texas

Attachment No. 5

Authorization ID(s): WQ0002436-000; TX0085570

Date of Investigation: May 24 and 27, 2005 (sample collection on May 24, 2005)

Sampling Location & Parameter	Measured Value	Authorized Limit	Type Sample	COC ID No.	Primary Source of Wastewater or Waste
Field Data 001					
Flow MGD	5.75	n/a[1]	Instant.	On-site	Industrial[2]
pH SU	7.56	≥6 & ≤9	Grab	" "	" "
Temp. °F	87.8	n/a[3]	" "	" "	" "
D.O. mg/l	11.74	≥2.0	Grab	On-site	Industrial[2]
Lab Data 001					
CBOD mg/l	see note[5]	41	Grab	016128	Industrial[2]
TSS mg/l	" "	115	" "	" "	" "
VSS mg/l	" "	n/a	" "	" "	" "
NH_3-N mg/l	" "	9	" "	" "	" "
TOC mg/l	" "	333	" "	" "	" "
O&G mg/l	" "	15	" "	" "	" "
COD mg/l	" "	333	" "	" "	" "
T. Cr mg/l	" "	0.14	" "	" "	" "
T. Cu mg/l	" "	0.06	" "	" "	" "
T. Pb mg/l	" "	0.24	" "	" "	" "
T. Hg mg/l	" "	0.01	" "	" "	" "
T. Zn mg/l	see note[5]	0.10	" "	" "	" "
Hex Cr mg/l	<0.005	0.10	Grab	016129	Industrial[2]
VOC's ug/l	ND[4]	See Permit	" "	" "	" "
S-VOC's ug/l	ND[4]	See Permit	Grab	016129	Industrial[2]

[1] n/a: The daily average flow of effluent shall not exceed 9.7 MGD. The total volume discharged during any 24-hour period shall not exceed 15.1MGD.

[2] The primary source of wastewater is remediated groundwater and combined internal wastewater streams.

[3] The daily maximum temperature shall not exceed 95 °F

[4] The sample results for the specific parameters listed in the permit were non-detect

[5] The sample results for the parameters listed were not available from the TCEQ Houston Laboratory on the date of this report due to the metals instrument being down for maintenance. Sample results will be evaluated for compliance when they are received.

INVESTIGATION SAMPLE RESULTS

Regulated Entity Name: Formosa Plastics Corporation, Texas

Authorization ID(s): WQ0002436-000; TX0085570

Date of Investigation: May 24 and 27, 2005 (sample collection on May 24, 2005)

Sampling Location & Parameter	Measured Value	Authorized Limit	Type Sample	COC ID No.	Primary Source of Wastewater or Waste
Field Data 101					
Flow MGD	1.97	n/a[1]	Instant.	On-site	Industrial[2]
pH SU	7.42	≥6 & ≤9	Grab	" "	" "
Temp. °F	95	n/a	Grab	On-site	Industrial[2]
Lab Data 101					
BOD mg/l	see note[5]	90	Grab	016128	Industrial[2]
TSS mg/l	" "	160	" "	" "	" "
VSS mg/l	" "	n/a	" "	" "	" "
COD mg/l	see note[5]	350	" "	" "	" "
VOC's ug/l	ND[4]	See Permit	Grab	016128	Industrial[2]
S-VOC's ug/l	ND[4]	See Permit	Grab	016128	Industrial[2]

[1]n/a: The daily average flow of effluent shall not exceed 4.0 MGD. The total volume discharged during any 24-hour period shall not exceed 6.0 MGD.

[2] The primary source of wastewater is treated process wastewater, storm water, and utility wastewater from the biological treatment train.

[4] The sample results for the specific parameters listed in the permit were non-detect.

[5] The sample results for the parameters listed were not available from the TCEQ Houston Laboratory on the date of this report due to the metals instrument being down for maintenance. Sample results will be evaluated for compliance when they are received.

SEVERN TRENT STI

LABORATORY TEST RESULTS

Job Number: 230406

Date: 06/16/2005

CUSTOMER: Texas Commission on Env. Quality PROJECT: SHEA LADNER ATTN: MarSheila Stafford

Customer Sample ID: 016129-01
Date Sampled.....: 05/24/2005
Time Sampled.....: 10:35
Sample Matrix.....: Water

Laboratory Sample ID: 230406-1
Date Received.....: 05/24/2005
Time Received.....: 15:33

TEST METHOD	PARAMETER/TEST DESCRIPTION	SAMPLE RESULT	REPORTING LIMIT	UNITS	DATE	TECH
SW-846 7197	Hexavalent Chromium	<0.005	0.005	mg/L	05/25/05	rjt
SW-846 3520C	Extraction (Continuous Liq/Liq) Continuous Liquid-Liquid Extraction	Complete			05/26/05	aig
SW-846 8270C	Semivolatile Organics					
	Acenaphthene	ND	11	ug/L	05/31/05	bec
	Acenaphthylene	ND	11	ug/L	05/31/05	bec
	Aniline	ND	22	ug/L	05/31/05	bec
	Anthracene	ND	11	ug/L	05/31/05	bec
	Benzo(a)anthracene (1,2-Benzanthracene)	ND	11	ug/L	05/31/05	bec
	Benzo(b)fluoranthene	ND	11	ug/L	05/31/05	bec
	Benzo(k)fluoranthene	ND	11	ug/L	05/31/05	bec
	Benzo(ghi)perylene	ND	11	ug/L	05/31/05	bec
	Benzo(a)pyrene	ND	11	ug/L	05/31/05	bec
	Benzyl alcohol	ND	22	ug/L	05/31/05	bec
	Bis(2-chloroethoxy)methane	ND	11	ug/L	05/31/05	bec
	Bis(2-chloroethyl)ether	ND	11	ug/L	05/31/05	bec
	Bis(2-chloroisopropyl)ether	ND	11	ug/L	05/31/05	bec
	Bis(2-ethylhexyl)phthalate	ND	11	ug/L	05/31/05	bec
	4-Bromophenyl phenyl ether	ND	11	ug/L	05/31/05	bec
	Butyl benzyl phthalate	ND	11	ug/L	05/31/05	bec
	4-Chloroaniline	ND	22	ug/L	05/31/05	bec
	4-Chloro-3-methylphenol	ND	22	ug/L	05/31/05	bec
	2-Chloronaphthalene	ND	11	ug/L	05/31/05	bec
	2-Chlorophenol	ND	11	ug/L	05/31/05	bec
	4-Chlorophenyl phenyl ether	ND	11	ug/L	05/31/05	bec
	Chrysene	ND	11	ug/L	05/31/05	bec
	Dibenzo(ah)anthracene	ND	11	ug/L	05/31/05	bec
	Dibenzofuran	ND	11	ug/L	05/31/05	bec
	1,2-Dichlorobenzene	ND	11	ug/L	05/31/05	bec
	1,3-Dichlorobenzene	ND	11	ug/L	05/31/05	bec
	1,4-Dichlorobenzene	ND	11	ug/L	05/31/05	bec
	3,3-Dichlorobenzidine	ND	22	ug/L	05/31/05	bec
	Diethyl phthalate	ND	11	ug/L	05/31/05	bec
	Dimethyl phthalate	ND	11	ug/L	05/31/05	bec
	2,4-Dimethylphenol	ND	11	ug/L	05/31/05	bec
	Di-n-butyl phthalate	ND	11	ug/L	05/31/05	bec
	Di-n-octyl phthalate	ND	11	ug/L	05/31/05	bec
	2,4-Dichlorophenol	ND	11	ug/L	05/31/05	bec
	4,6-Dinitro-2-methylphenol	ND	55	ug/L	05/31/05	bec
	2,4-Dinitrophenol	ND	55	ug/L	05/31/05	bec
	2,4-Dinitrotoluene	ND	11	ug/L	05/31/05	bec
	2,6-Dinitrotoluene	ND	11	ug/L	05/31/05	bec
	Fluoranthene	ND	11	ug/L	05/31/05	bec
	Fluorene	ND	11	ug/L	05/31/05	bec
	Hexachlorobenzene	ND	11	ug/L	05/31/05	bec
	Hexachlorobutadiene	ND	11	ug/L	05/31/05	bec

1733 North Padre Island Drive • Corpus Christi, TX 78408 • Tel: 361 289 2673 • Fax: 361 289 2471 • www.sti-inc.com

SEVERN TRENT STL

LABORATORY TEST RESULTS

Job Number: 230406

Date: 06/16/2005

CUSTOMER: Texas Commission on Env. Quality PROJECT: SHEA LADNER ATTN: MarSheila Stafford

Customer Sample ID: 016129-01
Date Sampled.....: 05/24/2005
Time Sampled.....: 10:35
Sample Matrix.....: Water

Laboratory Sample ID: 230406-1
Date Received.....: 05/24/2005
Time Received.....: 15:33

TEST METHOD	PARAMETER/TEST DESCRIPTION	SAMPLE RESULT	REPORTING LIMIT	UNITS	DATE	TECH
	Hexachlorocyclopentadiene	ND	22	ug/L	05/31/05	bec
	Hexachloroethane	ND	11	ug/L	05/31/05	bec
	Indeno(123cd)pyrene	ND	11	ug/L	05/31/05	bec
	Isophorone	ND	11	ug/L	05/31/05	bec
	2-Methylnaphthalene	ND	11	ug/L	05/31/05	bec
	2-Methylphenol (o-cresol)	ND	11	ug/L	05/31/05	bec
	3 & 4 Methylphenol (m&p cresol)	ND	11	ug/L	05/31/05	bec
	Naphthalene	ND	11	ug/L	05/31/05	bec
	o-Nitroaniline	ND	22	ug/L	05/31/05	bec
	m-Nitroaniline	ND	55	ug/L	05/31/05	bec
	p-Nitroaniline	ND	22	ug/L	05/31/05	bec
	Nitrobenzene	ND	11	ug/L	05/31/05	bec
	2-Nitrophenol	ND	11	ug/L	05/31/05	bec
	4-Nitrophenol	ND	55	ug/L	05/31/05	bec
	n-Nitrosodi-n-propylamine	ND	11	ug/L	05/31/05	bec
	n-Nitrosodiphenylamine	ND	11	ug/L	05/31/05	bec
	Pentachlorophenol	ND	55	ug/L	05/31/05	bec
	Phenanthrene	ND	11	ug/L	05/31/05	bec
	Phenol	ND	11	ug/L	05/31/05	bec
	Pyrene	ND	11	ug/L	05/31/05	bec
	Pyridine	ND	11	ug/L	05/31/05	bec
	1,2,4-Trichlorobenzene	ND	11	ug/L	05/31/05	bec
	2,4,5-Trichlorophenol	ND	11	ug/L	05/31/05	bec
	2,4,6-Trichlorophenol	ND	11	ug/L	05/31/05	bec
SW-846 8260B	Volatile Organics					
	Acetone	ND	100	ug/L	05/26/05	den
	Acetonitrile	ND	50	ug/L	05/26/05	den
	Acrolein	ND	50	ug/L	05/26/05	den
	Acrylonitrile	ND	50	ug/L	05/26/05	den
	Benzene	ND	5	ug/L	05/26/05	den
	Bromodichloromethane	ND	5	ug/L	05/26/05	den
	Bromoform (Tribromomethane)	ND	5	ug/L	05/26/05	den
	Bromomethane (methyl bromide)	ND	5	ug/L	05/26/05	den
	Carbon Disulfide	ND	5	ug/L	05/26/05	den
	Carbon Tetrachloride	ND	5	ug/L	05/26/05	den
	Chlorobenzene	ND	5	ug/L	05/26/05	den
	Chloroethane (Ethyl chloride)	ND	5	ug/L	05/26/05	den
	Chloroform	8	5	ug/L	05/26/05	den
	Chloromethane (methyl chloride)	ND	5	ug/L	05/26/05	den
	Dibromochloromethane	ND	5	ug/L	05/26/05	den
	Dibromomethane	ND	5	ug/L	05/26/05	den
	1,2-Dibromoethane (EDB)	ND	5	ug/L	05/26/05	den
	Dichlorodifluoromethane	ND	5	ug/L	05/26/05	den
	1,1-Dichloroethane	ND	5	ug/L	05/26/05	den
	1,2-Dichloroethane (EDC)	ND	5	ug/L	05/26/05	den
	1,1-Dichloroethene (Vinylidene chloride)	ND	5	ug/L	05/26/05	den
	cis-1,2-Dichloroethene	ND	5	ug/L	05/26/05	den
	trans-1,2-Dichloroethene	ND	5	ug/L	05/26/05	den

1733 North Padre Island Drive • Corpus Christi, TX 78408 • Tel: 361 289 2673 • Fax: 361 289 2471 • www.stl-inc.com

SEVERN TRENT STL

LABORATORY TEST RESULTS

Job Number: 230406

Date: 06/16/2005

CUSTOMER: Texas Commission on Env. Quality PROJECT: SHEA LADNER ATTN: MarSheila Stafford

Customer Sample ID: 016129-01
Date Sampled.....: 05/24/2005
Time Sampled.....: 10:35
Sample Matrix.....: Water

Laboratory Sample ID: 230406-1
Date Received.....: 05/24/2005
Time Received.....: 15:33

TEST METHOD	PARAMETER/TEST DESCRIPTION	SAMPLE RESULT	REPORTING LIMIT	UNITS	DATE	TECH
	1,2-Dichloropropane	ND	5	ug/L	05/26/05	den
	1,3-Dichloropropane	ND	5	ug/L	05/26/05	den
	2,2-Dichloropropane	ND	5	ug/L	05/26/05	den
	1,1-Dichloropropene	ND	5	ug/L	05/26/05	den
	cis-1,3-Dichloropropene	ND	5	ug/L	05/26/05	den
	trans-1,3-Dichloropropene	ND	5	ug/L	05/26/05	den
	1,4-Dioxane	220	100	ug/L	05/26/05	den
	Ethyl Acetate	ND	5	ug/L	05/26/05	den
	Ethylbenzene	ND	5	ug/L	05/26/05	den
	Ethyl Ether (Diethyl Ether)	ND	5	ug/L	05/26/05	den
	Ethyl Methacrylate	ND	5	ug/L	05/26/05	den
	2-Hexanone	ND	5	ug/L	05/26/05	den
	Iodomethane (Methyl Iodide)	ND	5	ug/L	05/26/05	den
	Methylene Chloride (Dichloromethane)	ND	50	ug/L	05/26/05	den
	Methyl Ethyl Ketone (2-Butanone)	ND	10	ug/L	05/26/05	den
	4-Methyl-2-Pentanone (MIBK)	ND	5	ug/L	05/26/05	den
	Methyl Methacrylate	ND	5	ug/L	05/26/05	den
	tert-Butyl Methyl Ether (MTBE)	ND	5	ug/L	05/26/05	den
	2-Nitropropane	ND	5	ug/L	05/26/05	den
	Styrene	ND	5	ug/L	05/26/05	den
	1,1,2,2-Tetrachloroethane	ND	5	ug/L	05/26/05	den
	Tetrachloroethene	ND	5	ug/L	05/26/05	den
	Toluene	ND	5	ug/L	05/26/05	den
	1,2,3-Trichlorobenzene	ND	5	ug/L	05/26/05	den
	1,1,1-Trichloroethane	ND	5	ug/L	05/26/05	den
	1,1,2-Trichloroethane	ND	5	ug/L	05/26/05	den
	Trichloroethene	ND	5	ug/L	05/26/05	den
	Trichlorofluoromethane	ND	5	ug/L	05/26/05	den
	1,1,2-Trichloro-1,2,2-Trifluoroethane	ND	50	ug/L	05/26/05	den
	1,2,4-Trimethylbenzene	ND	5	ug/L	05/26/05	den
	1,3,5-Trimethylbenzene	ND	5	ug/L	05/26/05	den
	1,2,3-Trichloropropane	ND	5	ug/L	05/26/05	den
	Vinyl Acetate	ND	5	ug/L	05/26/05	den
	Vinyl Chloride (Chloroethene)	ND	5	ug/L	05/26/05	den
	Xylenes (total)	ND	15	ug/L	05/26/05	den

1733 North Padre Island Drive • Corpus Christi, TX 78408 • Tel: 361 289 2673 • Fax: 361 289 2471 • www.stl-inc.com

SEVERN TRENT STL

LABORATORY TEST RESULTS

Job Number: 230406

Date: 06/16/2005

CUSTOMER: Texas Commission on Env. Quality PROJECT: SHEA LADNER ATTN: MarSheila Stafford

Customer Sample ID: 016129-101
Date Sampled.....: 05/24/2005
Time Sampled.....: 10:50
Sample Matrix.....: Water

Laboratory Sample ID: 230406-2
Date Received.....: 05/24/2005
Time Received.....: 15:33

TEST METHOD	PARAMETER/TEST DESCRIPTION	SAMPLE RESULT	REPORTING LIMIT	UNITS	DATE	TECH
SW-846 3520C	Extraction (Continuous Liq/Liq)					
	Continuous Liquid-Liquid Extraction	Complete			05/26/05	aig
SW-846 8270C	Semivolatile Organics					
	Acenaphthene	ND	10	ug/L	05/31/05	bec
	Acenaphthylene	ND	10	ug/L	05/31/05	bec
	Aniline	ND	20	ug/L	05/31/05	bec
	Anthracene	ND	10	ug/L	05/31/05	bec
	Benzo(a)anthracene (1,2-Benzanthracene)	ND	10	ug/L	05/31/05	bec
	Benzo(b)fluoranthene	ND	10	ug/L	05/31/05	bec
	Benzo(k)fluoranthene	ND	10	ug/L	05/31/05	bec
	Benzo(ghi)perylene	ND	10	ug/L	05/31/05	bec
	Benzo(a)pyrene	ND	10	ug/L	05/31/05	bec
	Benzyl alcohol	ND	20	ug/L	05/31/05	bec
	Bis(2-chloroethoxy)methane	ND	10	ug/L	05/31/05	bec
	Bis(2-chloroethyl)ether	ND	10	ug/L	05/31/05	bec
	Bis(2-chloroisopropyl)ether	ND	10	ug/L	05/31/05	bec
	Bis(2-ethylhexyl)phthalate	ND	10	ug/L	05/31/05	bec
	4-Bromophenyl phenyl ether	ND	10	ug/L	05/31/05	bec
	Butyl benzyl phthalate	ND	10	ug/L	05/31/05	bec
	4-Chloroaniline	ND	20	ug/L	05/31/05	bec
	4-Chloro-3-methylphenol	ND	20	ug/L	05/31/05	bec
	2-Chloronaphthalene	ND	10	ug/L	05/31/05	bec
	2-Chlorophenol	ND	10	ug/L	05/31/05	bec
	4-Chlorophenyl phenyl ether	ND	10	ug/L	05/31/05	bec
	Chrysene	ND	10	ug/L	05/31/05	bec
	Dibenzo(ah)anthracene	ND	10	ug/L	05/31/05	bec
	Dibenzofuran	ND	10	ug/L	05/31/05	bec
	1,2-Dichlorobenzene	ND	10	ug/L	05/31/05	bec
	1,3-Dichlorobenzene	ND	10	ug/L	05/31/05	bec
	1,4-Dichlorobenzene	ND	10	ug/L	05/31/05	bec
	3,3-Dichlorobenzidine	ND	20	ug/L	05/31/05	bec
	Diethyl phthalate	ND	10	ug/L	05/31/05	bec
	Dimethyl phthalate	ND	10	ug/L	05/31/05	bec
	2,4-Dimethylphenol	ND	10	ug/L	05/31/05	bec
	Di-n-butyl phthalate	ND	10	ug/L	05/31/05	bec
	Di-n-octyl phthalate	ND	10	ug/L	05/31/05	bec
	2,4-Dichlorophenol	ND	10	ug/L	05/31/05	bec
	4,6-Dinitro-2-methylphenol	ND	50	ug/L	05/31/05	bec
	2,4-Dinitrophenol	ND	50	ug/L	05/31/05	bec
	2,4-Dinitrotoluene	ND	10	ug/L	05/31/05	bec
	2,6-Dinitrotoluene	ND	10	ug/L	05/31/05	bec
	Fluoranthene	ND	10	ug/L	05/31/05	bec
	Fluorene	ND	10	ug/L	05/31/05	bec
	Hexachlorobenzene	ND	10	ug/L	05/31/05	bec
	Hexachlorobutadiene	ND	10	ug/L	05/31/05	bec
	Hexachlorocyclopentadiene	ND	20	ug/L	05/31/05	bec
	Hexachloroethane	ND	10	ug/L	05/31/05	bec
	Indeno(123cd)pyrene	ND	10	ug/L	05/31/05	bec

1733 North Padre Island Drive • Corpus Christi, TX 78408 • Tel: 361 289 2673 • Fax: 361 289 2471 • www.stl-inc.com

SEVERN TRENT STL

LABORATORY TEST RESULTS

Job Number: 230406

Date: 06/16/2005

CUSTOMER: Texas Commission on Env. Quality PROJECT: SHEA LADNER ATTN: MarSheila Stafford

Customer Sample ID: 016129-101
Date Sampled.....: 05/24/2005
Time Sampled.....: 10:50
Sample Matrix.....: Water

Laboratory Sample ID: 230406-2
Date Received.....: 05/24/2005
Time Received.....: 15:33

TEST METHOD	PARAMETER/TEST DESCRIPTION	SAMPLE RESULT	REPORTING LIMIT	UNITS	DATE	TECH
	Isophorone	ND	10	ug/L	05/31/05	bec
	2-Methylnaphthalene	ND	10	ug/L	05/31/05	bec
	2-Methylphenol (o-cresol)	ND	10	ug/L	05/31/05	bec
	3 & 4 Methylphenol (m&p cresol)	ND	10	ug/L	05/31/05	bec
	Naphthalene	ND	10	ug/L	05/31/05	bec
	o-Nitroaniline	ND	20	ug/L	05/31/05	bec
	m-Nitroaniline	ND	50	ug/L	05/31/05	bec
	p-Nitroaniline	ND	20	ug/L	05/31/05	bec
	Nitrobenzene	ND	10	ug/L	05/31/05	bec
	2-Nitrophenol	ND	10	ug/L	05/31/05	bec
	4-Nitrophenol	ND	50	ug/L	05/31/05	bec
	n-Nitrosodi-n-propylamine	ND	10	ug/L	05/31/05	bec
	n-Nitrosodiphenylamine	ND	10	ug/L	05/31/05	bec
	Pentachlorophenol	ND	50	ug/L	05/31/05	bec
	Phenanthrene	ND	10	ug/L	05/31/05	bec
	Phenol	ND	10	ug/L	05/31/05	bec
	Pyrene	ND	10	ug/L	05/31/05	bec
	Pyridine	ND	10	ug/L	05/31/05	bec
	1,2,4-Trichlorobenzene	ND	10	ug/L	05/31/05	bec
	2,4,5-Trichlorophenol	ND	10	ug/L	05/31/05	bec
	2,4,6-Trichlorophenol	ND	10	ug/L	05/31/05	bec
SW-846 8260B	Volatile Organics					
	Acetone	ND	100	ug/L	05/26/05	den
	Acetonitrile	ND	50	ug/L	05/26/05	den
	Acrolein	ND	50	ug/L	05/26/05	den
	Acrylonitrile	ND	50	ug/L	05/26/05	den
	Benzene	ND	5	ug/L	05/26/05	den
	Bromodichloromethane	ND	5	ug/L	05/26/05	den
	Bromoform (Tribromomethane)	ND	5	ug/L	05/26/05	den
	Bromomethane (methyl bromide)	ND	5	ug/L	05/26/05	den
	Carbon Disulfide	ND	5	ug/L	05/26/05	den
	Carbon Tetrachloride	ND	5	ug/L	05/26/05	den
	Chlorobenzene	ND	5	ug/L	05/26/05	den
	Chloroethane (Ethyl chloride)	ND	5	ug/L	05/26/05	den
	Chloroform	ND	5	ug/L	05/26/05	den
	Chloromethane (methyl chloride)	ND	5	ug/L	05/26/05	den
	Dibromochloromethane	ND	5	ug/L	05/26/05	den
	Dibromomethane	ND	5	ug/L	05/26/05	den
	1,2-Dibromoethane (EDB)	ND	5	ug/L	05/26/05	den
	Dichlorodifluoromethane	ND	5	ug/L	05/26/05	den
	1,1-Dichloroethane	ND	5	ug/L	05/26/05	den
	1,2-Dichloroethane (EDC)	ND	5	ug/L	05/26/05	den
	1,1-Dichloroethene (Vinylidene chloride)	ND	5	ug/L	05/26/05	den
	cis-1,2-Dichloroethene	ND	5	ug/L	05/26/05	den
	trans-1,2-Dichloroethene	ND	5	ug/L	05/26/05	den
	1,2-Dichloropropane	ND	5	ug/L	05/26/05	den
	1,3-Dichloropropane	ND	5	ug/L	05/26/05	den
	2,2-Dichloropropane	ND	5	ug/L	05/26/05	den

1733 North Padre Island Drive • Corpus Christi, TX 78408 • Tel: 361 289 2673 • Fax: 361 289 2471 • www.stl-inc.com

SEVERN TRENT STL

LABORATORY TEST RESULTS

Job Number: 230406

Date: 06/16/2005

CUSTOMER: Texas Commission on Env. Quality PROJECT: SHEA LADNER ATTN: MarSheila Stafford

Customer Sample ID: 016129-101
Date Sampled.....: 05/24/2005
Time Sampled.....: 10:50
Sample Matrix.....: Water

Laboratory Sample ID: 230406-2
Date Received.....: 05/24/2005
Time Received.....: 15:33

TEST METHOD	PARAMETER/TEST DESCRIPTION	SAMPLE RESULT	REPORTING LIMIT	UNITS	DATE	TECH
	1,1-Dichloropropene	ND	5	ug/L	05/26/05	den
	cis-1,3-Dichloropropene	ND	5	ug/L	05/26/05	den
	trans-1,3-Dichloropropene	ND	5	ug/L	05/26/05	den
	1,4-Dioxane	490	100	ug/L	05/26/05	den
	Ethyl Acetate	ND	5	ug/L	05/26/05	den
	Ethylbenzene	ND	5	ug/L	05/26/05	den
	Ethyl Ether (Diethyl Ether)	ND	5	ug/L	05/26/05	den
	Ethyl Methacrylate	ND	5	ug/L	05/26/05	den
	2-Hexanone	ND	5	ug/L	05/26/05	den
	Iodomethane (Methyl Iodide)	ND	5	ug/L	05/26/05	den
	Methylene Chloride (Dichloromethane)	ND	50	ug/L	05/26/05	den
	Methyl Ethyl Ketone (2-Butanone)	ND	10	ug/L	05/26/05	den
	4-Methyl-2-Pentanone (MIBK)	ND	5	ug/L	05/26/05	den
	Methyl Methacrylate	ND	5	ug/L	05/26/05	den
	tert-Butyl Methyl Ether (MTBE)	ND	5	ug/L	05/26/05	den
	2-Nitropropane	ND	5	ug/L	05/26/05	den
	Styrene	ND	5	ug/L	05/26/05	den
	1,1,2,2-Tetrachloroethane	ND	5	ug/L	05/26/05	den
	Tetrachloroethene	ND	5	ug/L	05/26/05	den
	Toluene	ND	5	ug/L	05/26/05	den
	1,2,3-Trichlorobenzene	ND	5	ug/L	05/26/05	den
	1,1,1-Trichloroethane	ND	5	ug/L	05/26/05	den
	1,1,2-Trichloroethane	ND	5	ug/L	05/26/05	den
	Trichloroethene	ND	5	ug/L	05/26/05	den
	Trichlorofluoromethane	ND	50	ug/L	05/26/05	den
	1,1,2-Trichloro-1,2,2-Trifluoroethane	ND	5	ug/L	05/26/05	den
	1,2,4-Trimethylbenzene	ND	5	ug/L	05/26/05	den
	1,3,5-Trimethylbenzene	ND	5	ug/L	05/26/05	den
	1,2,3-Trichloropropane	ND	5	ug/L	05/26/05	den
	Vinyl Acetate	ND	5	ug/L	05/26/05	den
	Vinyl Chloride (Chloroethene)	ND	15	ug/L	05/26/05	den
	Xylenes (total)					

1733 North Padre Island Drive • Corpus Christi, TX 78408 • Tel: 361 289 2673 • Fax: 361 289 2471 • www.stl-inc.com

TEXAS COMMISSION ON ENVIRONMENTAL QUALITY

Chain of Custody Record

2304016

016129

Location:

(Do not fill in this shaded area if the facility information must be confidential)

Permit #: 2436

Region: 14 | Organization #: 4214 | PCA Code: 25071 | Program: Water | Sampler telephone number: (361) 825-3125

E-Mail ID: slacher@tceq.state.tx.us | Sampler: (signature) | Sampler: (please print clearly) Shea Lacher

Lab ID Number	Sample ID	Date	Time	# of Bottles	Grab/ Comp.	Matrix L,S,M,O,T	CL2	pH	Cond.	Analyses Requested	REMARKS
	~~001~~ 001	5/24/05	10:35	6	G	L	N/E	7.56	N/E	VOC's, Semi-Volatiles, Hex. Cr.	SX
	-02										
	~~101~~ 101	5/24/05	10:50	6	G	L	N/E	7.42	N/E	VOC's, Semi-Volatiles	SX
	-04										
	-05										
	-06										
	-07										
	-08										
	-09										
	-10										

Relinquished by:	Date	Time	Received by:
[signature]	5/24/05	1533	C. Donathan STL-CC
Relinquished by:	Date	Time	Received by:
Relinquished by:	Date	Time	Received by:
Relinquished by:	Date	Time	Received by:
Shipper name:	Shipper Number:		

For Laboratory Use:

Received on ice: (Y) N 1.9 deg. C

Preservatives: Y N

COC Seal: Y N

Seals Intact: Y N

TCEQ-10065 (11/02) White (Original) -Lab Yellow-Lab Pink-Contract Lab Manager Goldenrod-Collector Copy

Attachment No. 6

TEXAS COMMISSION ON ENVIRONMENTAL QUALITY

Chain of Custody Record

Location:

(Do not fill in this shaded area if the facility information must be confidential)

Permit #:

Region:	Organization #:	PCA Code:	Program:	Sampler telephone number:

E-Mail ID:	Sampler: (signature)	Sampler: (please print clearly)

Lab ID Number	Sample ID	Date	Time	# of Bottles	Grab/ Comp.	Matrix L,S,M,O,T	CL2	pH	Cond.	Analyses Requested	REMARKS
	-01										
	-02										
	-03										
	-04										
	-05										
	-06										
	-07										
	-08										
	-09										
	-10										

Relinquished by:	Date	Time	Received by:	For Laboratory Use:
Relinquished by:	Date	Time	Received by:	Received on ice: Y N deg. C
Relinquished by:	Date	Time	Received by:	Preservatives: Y N
Relinquished by:	Date	Time	Received by:	COC Seal: Y N
Shipper name:	Shipper Number:			Seals Intact: Y N

TCEQ-10065 (11/02) White (Original) -Lab Yellow-Lab Pink-Contract Lab Manager Goldenrod-Collector Copy

TWD/02436/CO

Kathleen Hartnett White, *Chairman*
R. B. "Ralph" Marquez, *Commissioner*
Larry R. Soward, *Commissioner*
Glenn Shankle, *Executive Director*

TEXAS COMMISSION ON ENVIRONMENTAL QUALITY

Protecting Texas by Reducing and Preventing Pollution

RECEIVE
JUL 25 2005
Air/Toxics & Inspection Coordination Branch
6EN-A

July 21, 2005

CERTIFIED MAIL #7002 0510 0001 8077 1225
RETURN RECEIPT REQUESTED

Mr. R. P. Smith, Vice President/General Manager
Formosa Plastics Corporation, Texas
P. O. Box 700
Point Comfort, Texas 77978

Re: Notice of Violation for the Comprehensive Compliance Investigation at:
Formosa Plastics Corporation, Texas, 201 Formosa Drive, Point Comfort (Calhoun County), Texas
TPDES Permit No.: WQ0002436-000; EPA ID No.: TX0085570

Dear Mr. Smith:

On May 24 and 27, 2005, Ms. Shea Ladner of the Texas Commission on Environmental Quality (TCEQ) Corpus Christi Region Office conducted an investigation of the above-referenced facility to evaluate compliance with applicable requirements for wastewater treatment. No violations were documented during the investigation of the plant. However, as part of the investigation process, a file review of noncompliance notifications identified outstanding alleged violations for which compliance documentation has already been submitted. Enclosed is a summary which lists the investigation findings. No further response from you is necessary at this time.

In the listing of alleged violations, we have cited applicable requirements, including TCEQ rules. If you would like to obtain a copy of the applicable TCEQ rules, you may contact any of the sources listed in the enclosed brochure entitled "Obtaining TCEQ Rules."

The Texas Commission on Environmental Quality appreciates your assistance in this matter. Please note that the Legislature has granted TCEQ enforcement powers which we may exercise to ensure compliance with environmental regulatory requirements. Self-reported effluent violations may still be subject to enforcement, including penalties, upon review by the Enforcement Division.

If you have additional information that we are unaware of, you have the opportunity to contest the violation documented in this notice. Should you choose to do so, you must notify the Corpus Christi Region Office within 10 days from the date of this letter. At that time, Mr. Sinoel B. Contreras will schedule a violation review meeting to be conducted within 21 days from the date of this letter. However, please be advised that if you decide to participate in the violation review process, the TCEQ may still require you to adhere to the compliance schedule included in the attached Summary of Investigation Findings until an official decision is made regarding the status of any or all of the contested violations.

If you or members of your staff have any questions, please feel free to contact Ms. Ladner in the Corpus Christi Region Office at (361) 825-3125.

Sincerely,

Sinoel B. Contreras, P.G.
Water Section Manager
Corpus Christi Region Office

SBC/SL/aa

Enclosures: Summary of Investigation Findings
Obtaining TCEQ Rules

cc: Surveillance Section (6EN-AS)
U.S. EPA, Region 6
1445 Ross Avenue
Dallas, Texas 75202-2733

Central Records, Building E, MC 212

Summary of Investigation Findings

FORMOSA POINT COMFORT PLANT
201 FORMOSA DRIVE GATE 3
POINT COMFORT, CALHOUN COUNTY, TX 77978
Additional ID(s): TX0085570
WQ0002436000

Investigation # 400202
Investigation Date: 05/24/2005

ALLEGED VIOLATIONS NOTED AND RESOLVED

Track No: 211512

30 TAC Chapter 305.125(1)

PERMIT TPDES Permit No. WQ0002436-000
Effluent Limitations and Monitoring Requirements, Page Nos. 2 and 2b, Provision No. 1

Alleged Violation:
Investigation: 400202 Comment Date: 7/19/2005

Failure to maintain the effluent quality within the permitted limits.
Self-monitored effluent data was reviewed for the period between May 2004 and April 2004. Two effluent excursions were noted for phenol daily maximum loading at Outfalls 101 and 001 during May 2004. The facility reported 2.16 lbs/day at Outfall 101 and 2.31 lbs/day at Outfall 001. The permitted daily maximum loading for phenols is 0.68 lbs/day and 0.74 lbs/day, respectively.

One effluent excursion was also noted for CBOD daily maximum concentration at Outfall 001 during December 2004. The facility reported a CBOD daily maximum concentration of 39 mg/l, which exceeds the permitted limit of 34 mg/l.

Recommended Corrective Action: Effluent shall be adequately treated so as to meet the permitted limits for each monitored parameter.

Resolution: The facility submitted noncompliance notifications for each of the effluent violations. Investigations were performed to determine the causes of the effluent excursions, and corrective measures were taken to ensure future compliance. The facility has not had any further effluent quality problems for the above-referenced parameters. No further information is requested regarding this issue.

Please be aware that effluent violations may still be subject to enforcement, including penalties, upon review by the Enforcement Division.