RECEIVED
JUN 2 0 2004
Air/Toxics & Inspection Coordination Branch
6EN-A

STATE 1

FILE CODE - THIS MUST BE FILLED IN BY THE REGION.

File Series/TCEQ ID/Folder C	MWD/02436-000/CO
County Name, if no TCEQ ID:	

JUL 2 2004

UNITED STATES ENVIRONMENTAL PROTECTION AGENCY
Washington, D.C. 20460

NPDES Compliance Inspection Report

Form Approved
OMB No. 2040-0003
Approval Expires 7-31-85

Section A: National Data System Coding

Transaction Code	NPDES	yr/mo/day	Inspec. Type	Inspector	Fac Type
1 N 2 5 3	T X 0 0 8 5 5 7 0 11	12 0 4 0 4 2 8 17	18 C	19 S	20 2

Remarks: T P D E S # W Q 0 0 0 2 4 3 6 - 0 0 0

Inspection Work Days	Facility Evaluation Rating	BI	QA	Reserved
67 69	70 4	71 N	72 N 73 74	75 80

Section B: Facility Data

Name and Location of Regulated Entity Inspected *(For industrial users discharging to POTW, also include POTW name and NPDES permit number)*	Entry Time /Date	Permit Effective Date
Formosa Plastics Corporation, Texas 201 Formosa Drive Point Comfort, Texas 77978	09:30, 04/04/28	01/05/31
	Exit Time/Date 14:00, 04/05/06	Permit Expiration Date 05/01/01

Name(s) of On-Site Representative(s)/Title(s)/Phone and Fax Number(s)
Mr. Mike Rivet, EHS Manager, (361) 987-7000, fax (361) 987-2363
Mr. Kelly Long, Environmental Engineering Staff, (361) 987-7463, fax (361) 987-2363

Skeleton File

Other Facility Data

RECEIVED
JUN 29 2004
6W-EA

Name, Address of Responsible Official/Title/Phone and Fax Number
Mr. R.P. Smith, Vice President/General Manger
P.O. Box 700
Point Comfort, Texas 77978
(361) 987-7000, fax (361) 987-2363

Contacted: Yes [ ] No [X]

Section C: Areas Evaluated During Inspection
(S = Satisfactory, M = Marginal, U = Unsatisfactory, N = Not Evaluated)

S	Permit	S	Flow Measurement	S	Operations & Maintenance	N	CSO/SSO
S	Records/Reports	S	Self-Monitoring Program	S	Sludge Handling/Disposal	N	Pollution Prevention
S	Facility Site Review	N	Compliance Schedules	N	Pretreatment	N	Multimedia
U	Effluent/Receiving Waters	S	Laboratory	N	Storm Water	N	Other:

Section D: Summary of Findings/Comments (Attach additional sheets if necessary)

Effluent/Receiving Waters: Self-reported effluent data shows an exceedance for pH maximum at Outfall 006 in June 2003, and an exceedance for chloroform daily maximum loading at Outfall 101 in July 2003. Refer to Alleged Violation Tracking No. 163908 in the Attached TCEQ CCEDS Report for further information.

Name(s) and Signature(s) of Inspector(s)	Agency/Office/Telephone/Fax	Date
Shea Ladner	TCEQ, Region 14, (361) 825-3125, fax (361) 825-3101	6/16/04
Signature of Management QA Reviewer Sinoel B. Contreras	Agency/Office/Phone and Fax Numbers TCEQ, Region 14, (361) 825-3100, fax (361) 825-3101	Date 6/22/04

EPA Form 3560-3 (Rev. 9-94) Previous editions are obsolete.

AUG 27 2004

Texas Con. .ssion on Environmen. Quality
Investigation Report
FORMOSA PLASTICS CORPORATION TEXAS

FORMOSA PLASTICS TEXAS
RN100218973

Investigation # 276036

Incident #

Investigator: SHEA LADNER

Site Classification
INDUSTRIAL MAJOR

Conducted: 04/28/2004 -- 05/06/2004

SIC Code: 2821
NAIC Code: 325211

Program(s): WASTEWATER

Investigation Type : Compliance Investigation

Location : 201 Formosa Dr, Point Comfort, TX

Additional ID(s) : WQ0002436000
TPDES0085570

Address: 201 FORMOSA DR; POINT COMFORT, TX 77978

Activity Type : WW CCI Discretionary - Comprehensive compliance investigation

Principal(s) :

Role	Name
RESPONDENT	FORMOSA PLASTICS CORPORATION TEXAS

Contact(s) :

Role	Title	Name	Phone	
Regulated Entity Mail Contact	VICE PRESIDENT/GENERAL MANAGER	MR R.P. SMITH	Work	(361) 987-7000 (361) 987-2363
Regulated Entity Contact	ENVIRONMENTAL ENGINEERING STAFF	MR KELLY LONG	Work	(361) 987-2363 (361) 987-7463
Participated in Investigation	MANAGER, COMBINED WATER TREATMENT PLANT	MR JOHN HYAK	Work	(361) 987-7450
Participated in Investigation	ENVIRONMENTAL HEALTH & SAFETY MANAGER	MR MIKE RIVET	Work	(361) 987-7000

Other Staff Member(s) :

Role	Name
QA REVIEWER	RAMON JUAREZ
SUPERVISOR	SINOEL CONTRERAS

Associated Check List

Checklist Name	Unit Name
WQ INVESTIGATION TYPES FY04	activity
WQ GENERAL CCI CHECKLIST	general
WQ INDUSTRIAL CCI	industrial

Investigation Comments :

INTRODUCTION
The Formosa Plastics Corporation Texas wastewater treatment plant was investigated on April 28 and 29, 2004 and May 6, 2004 to determine compliance with applicable wastewater treatment regulations. The facility was notified of the investigation on April 20, 2004. This investigation is considered a discretionary major Comprehensive Compliance Investigation (CCI). An exit interview, explaining the results of the investigation, was conducted on May 6, 2004 with Mr. Mike Rivet, EHS Manager, Mr. John Hyak, Combined Wastewater Treatment Manager, Mr. Kelly Long, Environmental Engineer, and Ms. Tamara Christian, Environmental Engineer. A Notice of Violation letter was

issued to facilitate compliance.

GENERAL FACILITY AND PROCESS INFORMATION
Formosa Plastics Corporation, Texas (FPC-TX) manufactures organic and inorganic chemicals, plastics, and synthetic fibers. Formosa's Combined Wastewater Treatment Plant (CWTP) is permitted to discharge remediated groundwater and combined internal wastewater streams at a daily average flow not to exceed 9.7 MGD at Outfall 001. The CWTP consists of a three-train biological treatment process, a physical treatment process, and a sanitary treatment package plant. Two internal outfalls, Outfall 101 and Outfall 201, commingle prior to discharge at Outfall 001. A simplified block overview of the treatment process is provided in this report as Attachment 1.

Effluent from Outfall 101 consists of process wastewater, storm water, and utility wastewater treated in two of the biological trains (A and B trains) of the CWTP. Effluent from Outfall 201 consists of utility and IEM wastewater streams treated in the physical treatment train of the CWTP. Treated domestic wastewater and treated process PVC wastewater from one of the biological trains (C-train) are recycled for use as cooling tower make-up water. Schematics of the biological treatment process and the physical treatment process are provided in this report in Attachments 2 and 3, respectively.

Outfalls 002 through 012 are authorized for the discharge of non-process area storm water, hydrostatic test water, fire water, non-contact steam condensate, and non-contact wash water. Outfall 001 and 011 discharge via pipeline to Lavaca Bay/Chocolate Bay in Segment No. 2453 of the Bays and Estuaries. Outfalls 002 through 010 and Outfall 012 discharge to unnamed tributaries, thence to Cox Creek, thence to Cox Creek Lake, thence to Cox Bay in Segment No. 2454 of the Bays and Estuaries. The water quality permit for this facility was issued on May 31, 2001 and expires on January 1, 2005.

Effluent samples were collected from Outfalls 001 and 101 during the investigation. Sample analysis results and chains of custody are attached to this report in Attachments 4 and 5, respectively. Sample results were compliant with permit limits. Outfall 001 discharges via a pipeline several hundred feet into and below the surface of Lavaca Bay; therefore, the receiving water could not be observed.

The primary flow measuring devices for Outfalls 001, 101, and 201 are magnetic closed conduit flow meters. A flow accuracy check cannot be performed on these types of meters. In-house technicians calibrate the flow meters once per month. At the time of the investigation, the most recent calibration was performed on March 10, 2004.

Effluent samples are collected by FPC-TX plant operators and analyzed by the in-house laboratory for all permit required parameters. At Outfalls 001, 101, and 201, field measurements of pH, dissolved oxygen, and temperature are analyzed by in-line equipment. At Outfalls 002 through 012, pH is measured by the in-house laboratory. Biomonitoring analyses are performed by PBS&J Laboratory in Houston, Texas.

BACKGROUND
A file review was conducted prior to the investigation date. Self-reported effluent data was reviewed for the period between May 2003 and April 2004. One effluent excursion was noted for chloroform at Outfall 101 during July 2003. One effluent excursion was also noted for pH at Outfall 006 during June 2003. Please refer to the Summary of Investigation Findings for further information.

FPC-TX experienced a major power outage during Hurricane Cluadette, which made landfall in the area on July 15, 2003. According to John Hyak, CWTP Manager, the CWTP was the last unit of the facility to lose power. When power was lost, an automatic valve at Outfall 001 closed; therefore the facility did not discharge until power was restored. The CWTP was back on-line by July 17, 2003; however, most process units were not operating until a later date. Samples for storm water and wastewater could not be analyzed until July 19, 2003 when power was restored to the in-house laboratory.

ADDITIONAL INFORMATION
All required records were reviewed on-site during the investigation. The records included lab

analyses, QA/QC data, Discharge Monitoring Reports (DMR's), noncompliance notifications, biomonitoring data, flow meter and in-line instrument calibration logs, diffuser maintenance data (Outfall 001), Lavaca Bay depth logs, process control data, sludge disposal records, the annual groundwater monitoring report, and the annual receiving water report. All records were well-maintained. FPC-TX performs random checks of the DMR calculations each month for quality control purposes.

Influent from each of the process units is sampled twice per day for process control purposes. Various other units in the CWTP are sampled daily as well. Off-spec wastewater is stacked in the process units' storage tanks so the CWTP operators can control the feed of the off-spec water into the treatment process. The operators also maintain a log of MLSS, 30-minute settling tests, and clarifier sludge blankets in the biological treatment process.

Potassium is monitored prior to discharge at Outfall 001. FPC-TX believes that potassium may have been the cause of some past failures of biomonitoring tests. Formosa has set an internal limit for potassium in the effluent.

Sludge from the biological and physical treatment processes are dewatered by two belt presses. Approximately two loads (13 - 16 short tons each) of dewatered sludge are transported three times per week by a registered hauler (Bealine Services Company, Inc.) to the Waste Management Coastal Plains landfill in Alvin, Texas.

A walk-through of the CWTP revealed that operations and maintenance was satisfactory. The entire CWTP is contained with concrete berms. Rainfall, overflows, and spills which occur in the contained area are drained to the head of the CWTP for treatment. Treatment units appeared to be well-maintained. The floating aerators in one of the sludge digesters have been out of service for several years; however, air is supplied from an external source. The biological treatment train appeared to be operating with a higher solids inventory than normal. According to the CWTP Manager, an increase in flows from the VCM plant and a clarifier recently brought on-line after maintenance activities have caused the high solids. The high solids do not appear to have affected effluent quality.

Storm water outfalls 002 through 012 were observed during the investigation. None of the outfalls were flowing at the time of observation. Each of the outfalls is equipped with a gate which remains shut until the water is sampled and found to meet the permitted limits. The outfalls are checked by FPC-TX personnel twice per day.

The FPC-TX in-house laboratory participates in the EPA's DMRQA program, which is a laboratory proficiency performance test. Analytes of unknown concentrations are submitted to participating laboratories for analyses and evaluation. FPC-TX submitted acceptable results for all analytes during the most recent evaluation.

NOV Date	Method
06/21/2004	WRITTEN

ALLEGED NONCOMPLIANCES NOTED AND RESOLVED

Track No: 164028 **Resolution Date: 6/17/04**

30 TAC Chapter 305.125(1)

PERMIT WQ0002436-000
Effluent Limitations and Monitoring Requirements, Page 2g, Provision No. 2
Effluent Limitations and Monitoring Requirements, Page 2b, Provision No. 1

Alleged Violation:
Investigation: 276036 Comment Date: 06/17/2004

Failure to comply with the permitted effluent limits. Self-monitoring data shows that the facility exceeded the pH maximum at Outfall 006 in June 2003, and the chloroform daily maximum loading concentration at Outfall 101 in July 2003.

Recommended Corrective Action: Comply with the permitted effluent limits. The pH

shall not be less than 6 standard units nor greater than 9 standard units when discharging at Outfall 006. The daily maximum loading concentration of chloroform shall not exceed 1.20 lbs/day at Outfall 101.

Resolution: Formosa Plastics Corporation, Texas provided noncompliance notifications to the TCEQ Region and Central Offices as required. The notifications described mitigation efforts and corrective actions that had been taken to become compliant with the permitted limits. No further information is required at this time.

Please note that self-reported effluent violations may still be subject to enforcement, including penalties, upon review by the Enforcement Division.

Signed _____ **Date** 6/16/04
Environmental Investigator

Signed _____ **Date** 6/22/04
Supervisor

Attachments: (in order of final report submittal)

___Enforcement Action Request (EAR)
___Letter to Facility (specify type) : _____
Investigation Report
✓ Sample Analysis Results, Attachments 4-5
___Manifests
___NOR

✓ Maps, Plans, Sketches, Attachments 1-3
___Photographs
___Correspondence from the facility
___Other (specify) :

FORMOSA PLASTICS CORPORATION
TEXAS OPERATIONS

WATER BALANCE PROCESS FLOW DIAGRAM

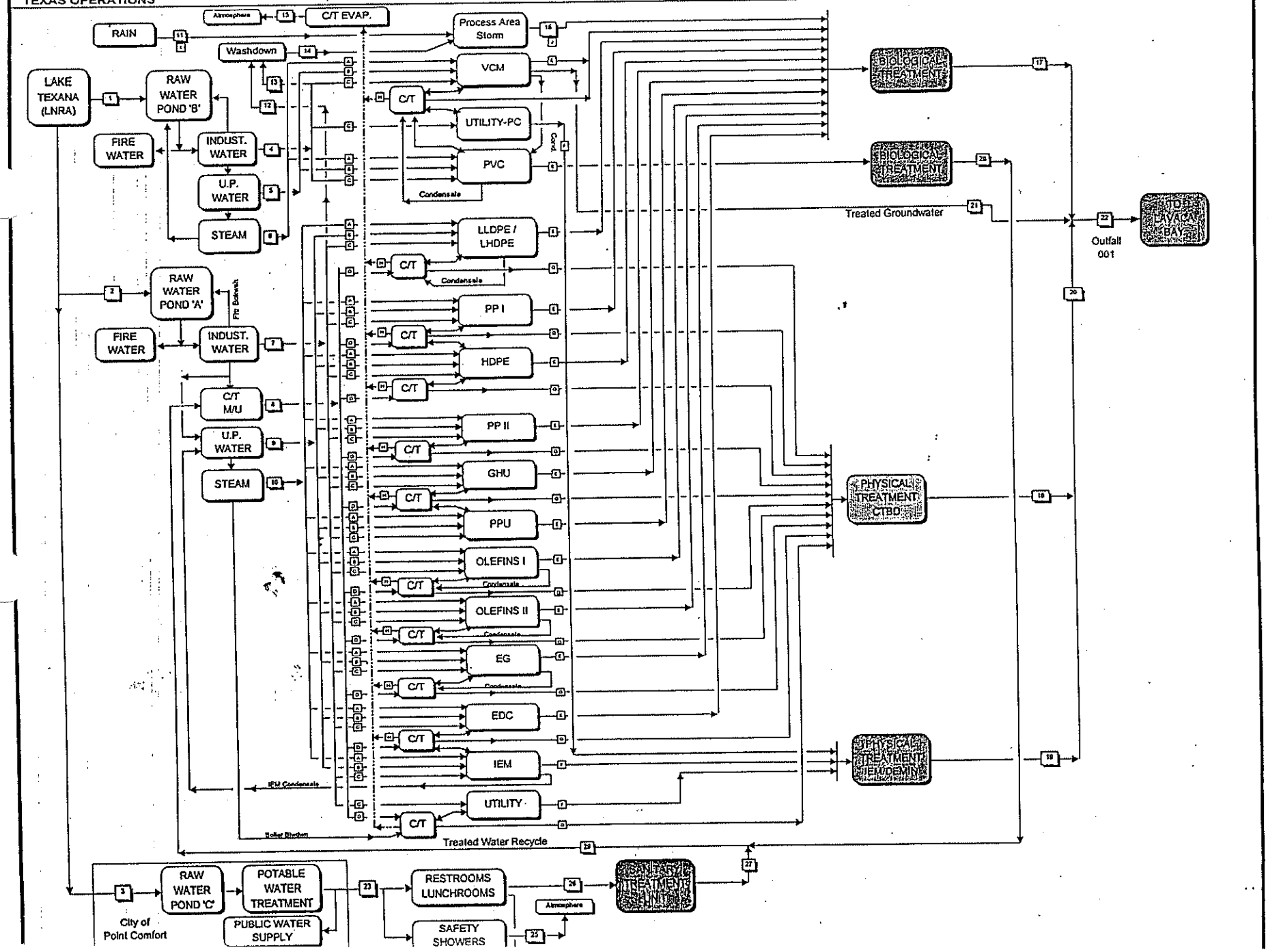

ATTACH. #1

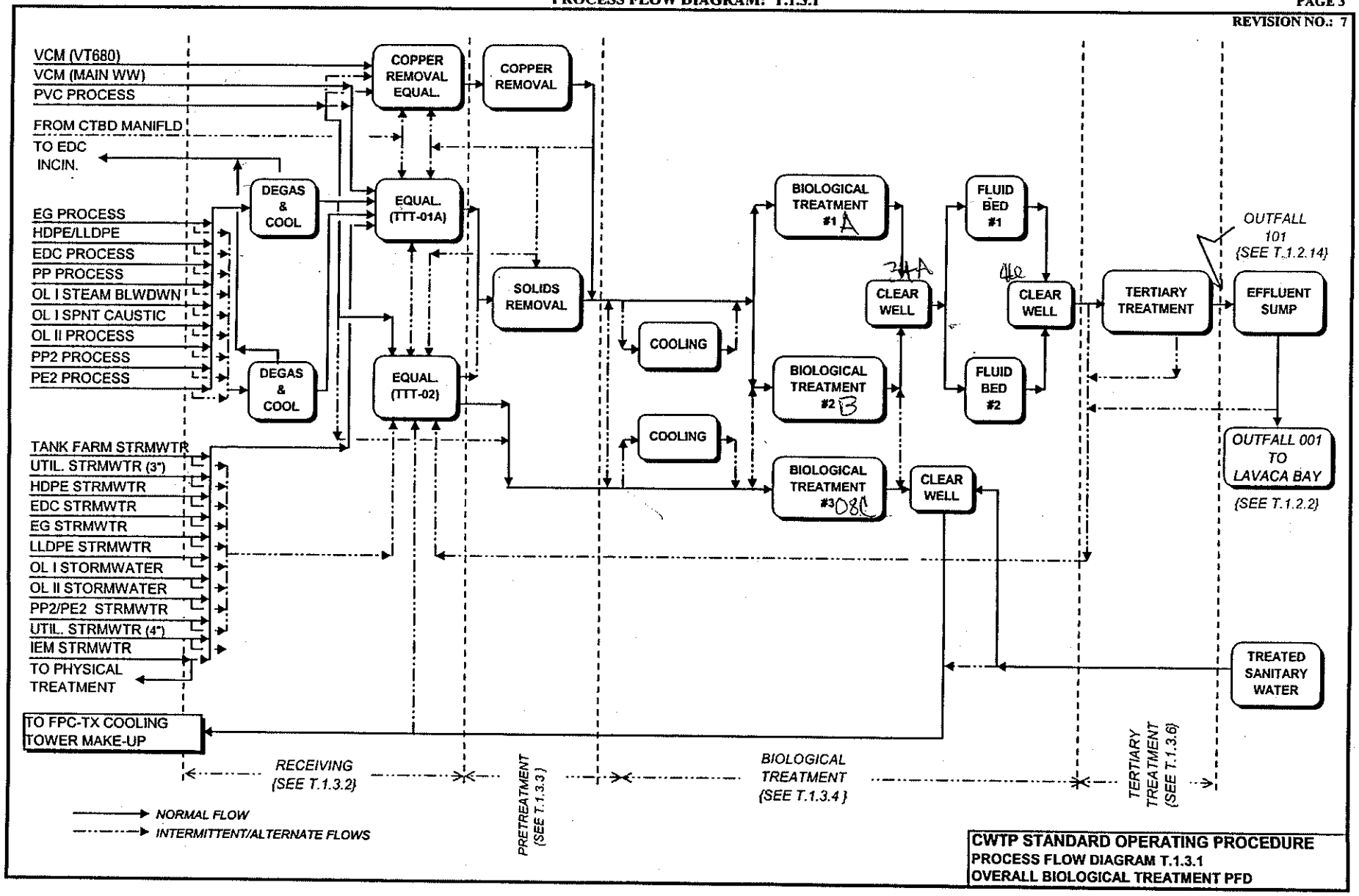

CWTP STANDARD OPERATING PROCEDURE
PROCESS FLOW DIAGRAM T.1.3.1
OVERALL BIOLOGICAL TREATMENT PFD

ATTACH. #3

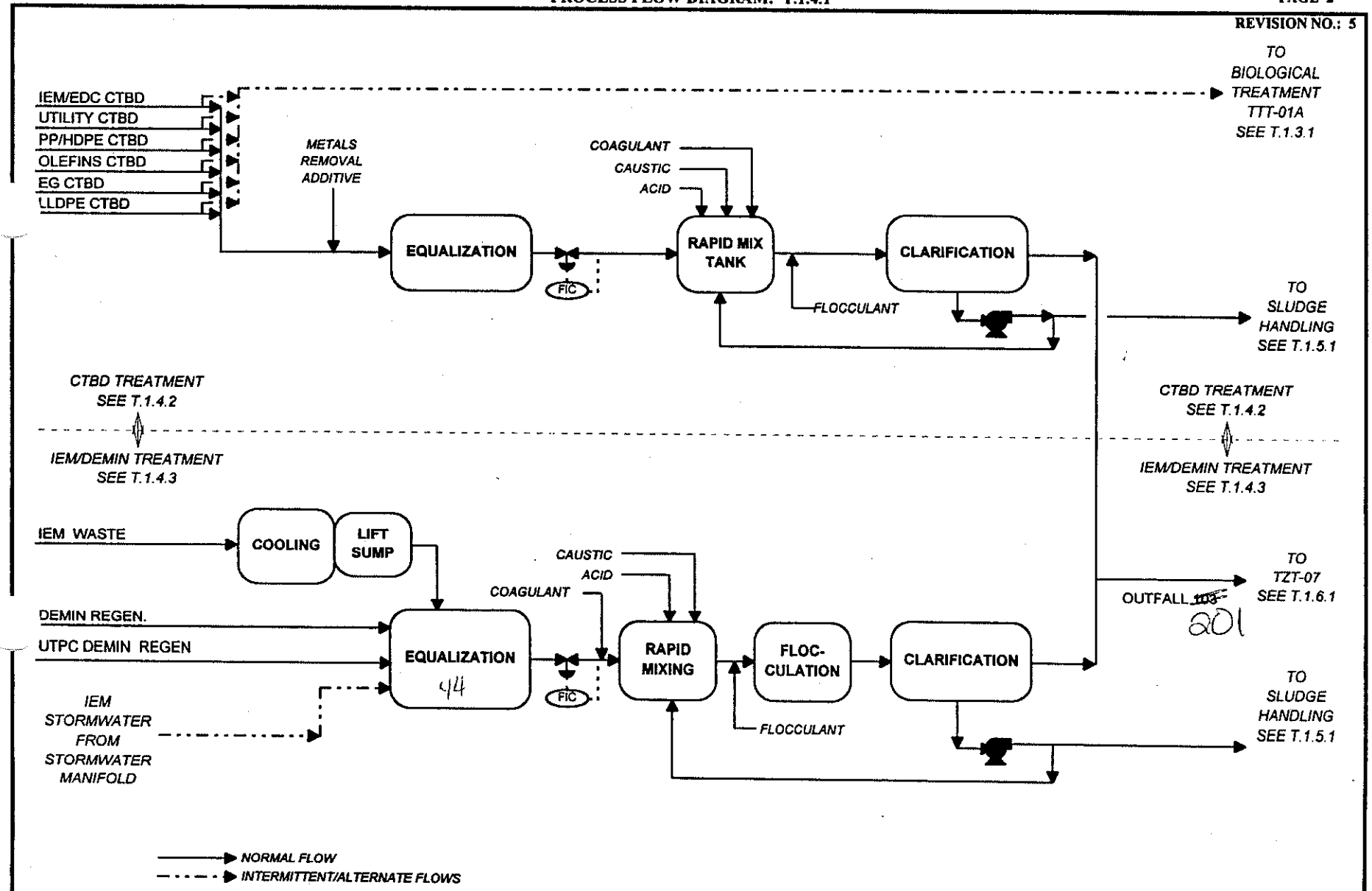

CWTP STANDARD OPERATING PROCEDURE
PROCESS FLOW DIAGRAM T.1.4.1
PHYSICAL TREATMENT OVERALL PFD

INVESTIGATION SAMPLE RESULTS

Regulated Entity Name: Formosa Plastics Corporation, Texas

Authorization ID(s): WQ0002436-000; TX0085570

Date of Investigation: April 28 - 29, 2004 and May 6, 2004 (sample collection on April 28, 2004)

Sampling Location & Parameter	Measured Value	Authorized Limit	Type Sample	COC ID No.	Primary Source of Wastewater or Waste
Field Data 001					
Flow MGD	5.76	n/a[1]	Instant.	On-site	Industrial[2]
pH SU	7.3	≥6 & ≤9	Grab	" "	" "
Temp. °F	84.3	n/a[3]	" "	" "	" "
D.O. mg/l	7.76	≥2.0	Grab	On-site	Industrial[2]
Lab Data 001					
CBOD mg/l	<3	41	Grab	014312	Industrial[2]
TSS mg/l	22	115	" "	" "	" "
VSS mg/l	16	n/a	" "	" "	" "
NH_3-N mg/l	0.07	9	" "	" "	" "
TOC mg/l	9	333	" "	" "	" "
O&G mg/l	<5	15	" "	" "	" "
COD mg/l	102	333	" "	" "	" "
T. Cr mg/l	<0.004	0.14	" "	" "	" "
Hex Cr mg/l	<0.005	0.10	" "	" "	" "
T. Cu mg/l	0.010	0.06	" "	" "	" "
T. Pb mg/l	<0.038	0.24	" "	" "	" "
T. Hg mg/l	<0.0001	0.01	" "	" "	" "
T. Zn mg/l	<0.012	0.10	" "	" "	" "
VOC's ug/l	ND[4]	See Permit	Grab	014313	Industrial[2]
S-VOC's ug/l	ND[4]	See Permit	Grab	014313	Industrial[2]

[1] n/a: The daily average flow of effluent shall not exceed 9.7 MGD. The total volume discharged during any 24-hour period shall not exceed 15.1MGD.

[2] The primary source of wastewater is remediated groundwater and combined internal wastewater streams.

[3] The daily maximum temperature shall not exceed 95 °F

[4] The sample results for the specific parameters listed in the permit were non-detect

INVESTIGATION SAMPLE RESULTS

Regulated Entity Name: Formosa Plastics Corporation, Texas

Authorization ID(s): WQ0002436-000; TX0085570

Date of Investigation: April 28 - 29, 2004 and May 6, 2004 (sample collection on April 28, 2004)

Sampling Location & Parameter	Measured Value	Authorized Limit	Type Sample	COC ID No.	Primary Source of Wastewater or Waste
Field Data 101					
Flow MGD	4.55	n/a[1]	Instant.	On-site	Industrial[2]
pH SU	7.23	≥6 & ≤9	Grab	" "	" "
Temp. °F	84.3	n/a	Grab	On-site	Industrial[2]
Lab Data 101					
BOD mg/l	<3	90	Grab	014312	Industrial[2]
TSS mg/l	14	160	" "	" "	" "
VSS mg/l	10	n/a	" "	" "	" "
COD mg/l	57	350	" "	" "	" "
VOC's ug/l	ND[4]	See Permit	Grab	014313	Industrial[2]
S-VOC's ug/l	ND[4]	See Permit	Grab	014313	Industrial[2]

[1]n/a: The daily average flow of effluent shall not exceed 4.0 MGD. The total volume discharged during any 24-hour period shall not exceed 6.0 MGD.
[2] The primary source of wastewater is treated process wastewater, storm water, and utility wastewater from the biological treatment train.
[4] The sample results for the specific parameters listed in the permit were non-detect.

TCEQ Laboratory
Report of Analysis
May 25, 2004 8:01AM

TCEQ Sample #: 0402154 **Group #:** 20040689 **Chain of Custody #:** 014312-01 **Region:** 14
Program: WATER **Organization #:** 4214 **Work #:** 25071
Sample Collected: 4/28/04 11:15 **Permit #:** 02436
Sample Received: 04/29/04 **Matrix:** LIQUID **Sample Collected:** SLANDER
Sample Depth: **CL2R:** 0.0 **Field pH:** 7.30 **Conductivity:**
Collection Site: Formosa Plastics--Grab--001

Constituent Name	Result	Unit	Prepared	Analyzed	Method
Ammonia Nitrogen	0.07	mg/L		05/05/04 11:35	350.1
CBOD (5-day)	<3	mg/L		04/30/04 8:00	5210 B
Chemical Oxygen Demand	102	mg/L		05/11/04 10:00	Hach
Chlorine Residual, Total	<0.1	mg/L		04/30/04 8:00	330.4
Chromium	<4	ug/L	5/5/04 15:19	05/15/04 9:17	200.7(T)
Copper	10	ug/L	5/5/04 15:19	05/15/04 9:17	200.7(T)
Hexane Extractable Material	<5	mg/L		04/29/04 11:00	1664
Lead	<38	ug/L	5/5/04 15:19	05/15/04 9:17	200.7(T)
Mercury	<0.100	ug/L		05/17/04 12:30	245.1
NPOC (TOC)	9	mg/L		05/04/04 11:07	415.2
Total Suspended Solids	22	mg/L		04/30/04 10:00	160.2
Volatile Suspended Solids	16	mg/L		04/30/04 10:00	160.4
Zinc	<12	ug/L	5/5/04 15:19	05/15/04 9:17	200.7(T)

End of Data for TCEQ Sample #: 0402154

Laboratory Approval: May 25, 2004

TNRFYNL.rpt

Modified Date: 24-Jul-2003

ATTACH. #4, PG. 3 OF 9

SEVERN TRENT STL

LABORATORY TEST RESULTS

Job Number: 224507

Date: 05/10/2004

CUSTOMER: Texas Commission on Env. Quality PROJECT: SHEA LADNER ATTN: MarSheila Stafford

Customer Sample ID: 014313-001A
Date Sampled.....: 04/28/2004
Time Sampled.....: 11:15
Sample Matrix.....: Water

Laboratory Sample ID: 224507-1
Date Received.....: 04/28/2004
Time Received.....: 17:00

TEST METHOD	PARAMETER/TEST DESCRIPTION	SAMPLE RESULT	REPORTING LIMIT	UNITS	DATE	TECH
EPA 218.4	Hexavalent Chromium	<0.005	0.005	mg/L	04/29/04	edr
EPA 625	Extraction Semivolatile Compounds					
	Separatory Funnel Liq/Liq Extraction	Complete			04/29/04	aig
EPA 625	Semivolatile Organics					
	Acenaphthene	ND	10	ug/L	05/03/04	gef
	Acenaphthylene	ND	10	ug/L	05/03/04	gef
	Anthracene	ND	10	ug/L	05/03/04	gef
	Benzidine	ND	50	ug/L	05/03/04	gef
	Benzo(a)anthracene (1,2-Benzanthracene)	ND	10	ug/L	05/03/04	gef
	Benzo(b)fluoranthene	ND	10	ug/L	05/03/04	gef
	Benzo(k)fluoranthene	ND	10	ug/L	05/03/04	gef
	Benzo(ghi)perylene	ND	10	ug/L	05/03/04	gef
	Benzo(a)pyrene	ND	10	ug/L	05/03/04	gef
	Butyl benzyl phthalate	ND	10	ug/L	05/03/04	gef
	Bis(2-chloroethoxy)methane	ND	10	ug/L	05/03/04	gef
	Bis(2-chloroethyl)ether	ND	10	ug/L	05/03/04	gef
	Bis(2-chloroisopropyl)ether	ND	10	ug/L	05/03/04	gef
	Bis(2-ethylhexyl)phthalate	ND	10	ug/L	05/03/04	gef
	4-Bromophenyl phenyl ether	ND	10	ug/L	05/03/04	gef
	2-Chloronaphthalene	ND	10	ug/L	05/03/04	gef
	4-Chlorophenyl phenyl ether	ND	10	ug/L	05/03/04	gef
	Chrysene	ND	10	ug/L	05/03/04	gef
	Dibenzo(ah)anthracene	ND	10	ug/L	05/03/04	gef
	1,2-Dichlorobenzene	ND	10	ug/L	05/03/04	gef
	1,3-Dichlorobenzene	ND	10	ug/L	05/03/04	gef
	1,4-Dichlorobenzene	ND	10	ug/L	05/03/04	gef
	3,3-Dichlorobenzidine	ND	20	ug/L	05/03/04	gef
	Diethyl phthalate	ND	10	ug/L	05/03/04	gef
	Dimethyl phthalate	ND	10	ug/L	05/03/04	gef
	Di-n-butyl phthalate	ND	10	ug/L	05/03/04	gef
	Di-n-octyl phthalate	ND	10	ug/L	05/03/04	gef
	2,4-Dinitrotoluene	ND	10	ug/L	05/03/04	gef
	2,6-Dinitrotoluene	ND	10	ug/L	05/03/04	gef
	Fluoranthene	ND	10	ug/L	05/03/04	gef
	Fluorene	ND	10	ug/L	05/03/04	gef
	Hexachlorobenzene	ND	10	ug/L	05/03/04	gef
	Hexachlorobutadiene	ND	10	ug/L	05/03/04	gef
	Hexachlorocyclopentadiene	ND	10	ug/L	05/03/04	gef
	Hexachloroethane	ND	10	ug/L	05/03/04	gef
	Indeno(123cd)pyrene	ND	10	ug/L	05/03/04	gef
	Isophorone	ND	10	ug/L	05/03/04	gef
	Naphthalene	ND	10	ug/L	05/03/04	gef
	Nitrobenzene	ND	10	ug/L	05/03/04	gef
	n-Nitrosodimethylamine	ND	20	ug/L	05/03/04	gef
	n-Nitrosodi-n-propylamine	ND	10	ug/L	05/03/04	gef
	n-Nitrosodiphenylamine	ND	10	ug/L	05/03/04	gef

1733 North Padre Island Drive • Corpus Christi, TX 78408 • Tel: 361 289 2673 • Fax: 361 289 2471 • www.stl-inc.com

ATTACH #4 Pg. 4 of 9

SEVERN TRENT STI

LABORATORY TEST RESULTS

Job Number: 224507

Date: 05/10/2004

CUSTOMER: Texas Commission on Env. Quality PROJECT: SHEA LADNER ATTN: MarSheila Stafford

Customer Sample ID: 014313-001A
Date Sampled.....: 04/28/2004
Time Sampled.....: 11:15
Sample Matrix.....: Water

Laboratory Sample ID: 224507-1
Date Received.....: 04/28/2004
Time Received.....: 17:00

TEST METHOD	PARAMETER/TEST DESCRIPTION	SAMPLE RESULT	REPORTING LIMIT	UNITS	DATE	TECH
	Phenanthrene	ND	10	ug/L	05/03/04	gef
	Pyrene	ND	10	ug/L	05/03/04	gef
	1,2,4-Trichlorobenzene	ND	10	ug/L	05/03/04	gef
	4-Chloro-3-methylphenol	ND	20	ug/L	05/03/04	gef
	2-Chlorophenol	ND	10	ug/L	05/03/04	gef
	2,4-Dichlorophenol	ND	10	ug/L	05/03/04	gef
	2,4-Dimethylphenol	ND	10	ug/L	05/03/04	gef
	2,4-Dinitrophenol	ND	50	ug/L	05/03/04	gef
	4,6-Dinitro-2-methylphenol	ND	50	ug/L	05/03/04	gef
	2-Nitrophenol	ND	10	ug/L	05/03/04	gef
	4-Nitrophenol	ND	50	ug/L	05/03/04	gef
	Pentachlorophenol	ND	50	ug/L	05/03/04	gef
	Phenol	ND	10	ug/L	05/03/04	gef
	2,4,6-Trichlorophenol	ND	10	ug/L	05/03/04	gef
EPA 625 Mod.	Semivolatile Organics-Non-Standard List					
	1,2-Diphenylhydrazine as Azobenzene	ND	10	ug/L	05/03/04	gef
	Benzidine	ND	50	ug/L	05/03/04	gef
	Hexachlorocyclopentadiene	ND	10	ug/L	05/03/04	gef
	n-Nitrosodimethylamine	ND	20	ug/L	05/03/04	gef
	n-Nitrosodiphenylamine	ND	10	ug/L	05/03/04	gef
EPA 624	Volatile Organics					
	Benzene	ND	5	ug/L	04/30/04	krm
	Bromodichloromethane	ND	5	ug/L	04/30/04	krm
	Bromoform (Tribromomethane)	ND	5	ug/L	04/30/04	krm
	Bromomethane (methyl bromide)	ND	5	ug/L	04/30/04	krm
	Carbon Tetrachloride	ND	5	ug/L	04/30/04	krm
	Chlorobenzene	ND	5	ug/L	04/30/04	krm
	Chloroethane (Ethyl chloride)	ND	5	ug/L	04/30/04	krm
	2-Chloroethylvinyl Ether	ND	5	ug/L	04/30/04	krm
	Chloroform	14	5	ug/L	04/30/04	krm
	Chloromethane (methyl chloride)	ND	5	ug/L	04/30/04	krm
	Dibromochloromethane	ND	5	ug/L	04/30/04	krm
	1,1-Dichloroethane	ND	5	ug/L	04/30/04	krm
	1,2-Dichloroethane (EDC)	ND	5	ug/L	04/30/04	krm
	1,1-Dichloroethene (Vinylidene chloride)	ND	5	ug/L	04/30/04	krm
	trans-1,2-Dichloroethene	ND	5	ug/L	04/30/04	krm
	1,2-Dichloropropane	ND	5	ug/L	04/30/04	krm
	cis-1,3-Dichloropropene	ND	5	ug/L	04/30/04	krm
	trans-1,3-Dichloropropene	ND	5	ug/L	04/30/04	krm
	Ethylbenzene	ND	5	ug/L	04/30/04	krm
	Methylene Chloride (Dichloromethane)	ND	50	ug/L	04/30/04	krm
	1,1,2,2-Tetrachloroethane	ND	5	ug/L	04/30/04	krm
	Tetrachloroethene	ND	5	ug/L	04/30/04	krm
	Toluene	ND	5	ug/L	04/30/04	krm
	1,1,1-Trichloroethane	ND	5	ug/L	04/30/04	krm
	1,1,2-Trichloroethane	ND	5	ug/L	04/30/04	krm
	Trichloroethene	ND	5	ug/L	04/30/04	krm

1733 North Padre Island Drive • Corpus Christi, TX 78408 • Tel: 361 289 2673 • Fax: 361 289 2471 • www.stl-inc.com

ATTACH #4 pg 5 of 9

SEVERN TRENT STL

LABORATORY TEST RESULTS

Job Number: 224507

Date: 05/10/2004

CUSTOMER: Texas Commission on Env. Quality PROJECT: SHEA LADNER ATTN: MarSheila Stafford

Customer Sample ID: 014313-001A
Date Sampled.....: 04/28/2004
Time Sampled.....: 11:15
Sample Matrix.....: Water

Laboratory Sample ID: 224507-1
Date Received.....: 04/28/2004
Time Received.....: 17:00

TEST METHOD	PARAMETER/TEST DESCRIPTION	SAMPLE RESULT	REPORTING LIMIT	UNITS	DATE	TECH
	Vinyl Chloride (Chloroethene)	ND	5	ug/L	04/30/04	krm

1733 North Padre Island Drive • Corpus Christi, TX 78408 • Tel: 361 289 2673 • Fax: 361 289 2471 • www.stl-inc.com

ATTACH #4. PG. 6 of 9

TCEQ Laboratory
Report of Analysis
May 25, 2004 8:01AM

TCEQ Sample #: 0402155	**Group #:** 20040689	**Chain of Custody #:** 014312-04	**Region:** 14
Program: WATER		**Organization #:** 4214	**Work #:** 25071
Sample Collected: 4/28/04 11:45		**Permit #:** 02436	
Sample Received: 04/29/04	**Matrix:** LIQUID	**Sample Collected:** SLANDER	
Sample Depth:	**CL2R:** 0.0	**Field pH:** 7.30	**Conductivity:**
Collection Site: Formosa Plastics--Grab--101			

Constituent Name	Result	Unit	Prepared	Analyzed	Method
BOD (5 day)	<3	mg/L		04/29/04 10:30	405.1
Chemical Oxygen Demand	57	mg/L		05/11/04 10:00	Hach
Total Suspended Solids	14	mg/L		04/30/04 10:00	160.2
Volatile Suspended Solids	10	mg/L		04/30/04 10:00	160.4

End of Data for TCEQ Sample #: 0402155

Laboratory Approval: May 25, 2004

TNRFYNL.rpt

Modified Date: 24-Jul-2003

SEVERN TRENT STI

LABORATORY TEST RESULTS

Job Number: 224507

Date: 05/10/2004

CUSTOMER: Texas Commission on Env. Quality PROJECT: SHEA LADNER ATTN: MarSheila Stafford

Customer Sample ID: 014313-101
Date Sampled.....: 04/28/2004
Time Sampled.....: 11:45
Sample Matrix.....: Water

Laboratory Sample ID: 224507-5
Date Received.....: 04/28/2004
Time Received.....: 17:00

TEST METHOD	PARAMETER/TEST DESCRIPTION	SAMPLE RESULT	REPORTING LIMIT	UNITS	DATE	TECH
EPA 625	Extraction Semivolatile Compounds					
	Separatory Funnel Liq/Liq Extraction	Complete			04/29/04	aig
EPA 625	Semivolatile Organics					
	Acenaphthene	ND	10	ug/L	05/03/04	gef
	Acenaphthylene	ND	10	ug/L	05/03/04	gef
	Anthracene	ND	10	ug/L	05/03/04	gef
	Benzidine	ND	50	ug/L	05/03/04	gef
	Benzo(a)anthracene (1,2-Benzanthracene)	ND	10	ug/L	05/03/04	gef
	Benzo(b)fluoranthene	ND	10	ug/L	05/03/04	gef
	Benzo(k)fluoranthene	ND	10	ug/L	05/03/04	gef
	Benzo(ghi)perylene	ND	10	ug/L	05/03/04	gef
	Benzo(a)pyrene	ND	10	ug/L	05/03/04	gef
	Butyl benzyl phthalate	ND	10	ug/L	05/03/04	gef
	Bis(2-chloroethoxy)methane	ND	10	ug/L	05/03/04	gef
	Bis(2-chloroethyl)ether	ND	10	ug/L	05/03/04	gef
	Bis(2-chloroisopropyl)ether	ND	10	ug/L	05/03/04	gef
	Bis(2-ethylhexyl)phthalate	ND	10	ug/L	05/03/04	gef
	4-Bromophenyl phenyl ether	ND	10	ug/L	05/03/04	gef
	2-Chloronaphthalene	ND	10	ug/L	05/03/04	gef
	4-Chlorophenyl phenyl ether	ND	10	ug/L	05/03/04	gef
	Chrysene	ND	10	ug/L	05/03/04	gef
	Dibenzo(ah)anthracene	ND	10	ug/L	05/03/04	gef
	1,2-Dichlorobenzene	ND	10	ug/L	05/03/04	gef
	1,3-Dichlorobenzene	ND	10	ug/L	05/03/04	gef
	1,4-Dichlorobenzene	ND	10	ug/L	05/03/04	gef
	3,3-Dichlorobenzidine	ND	20	ug/L	05/03/04	gef
	Diethyl phthalate	ND	10	ug/L	05/03/04	gef
	Dimethyl phthalate	ND	10	ug/L	05/03/04	gef
	Di-n-butyl phthalate	ND	10	ug/L	05/03/04	gef
	Di-n-octyl phthalate	ND	10	ug/L	05/03/04	gef
	2,4-Dinitrotoluene	ND	10	ug/L	05/03/04	gef
	2,6-Dinitrotoluene	ND	10	ug/L	05/03/04	gef
	Fluoranthene	ND	10	ug/L	05/03/04	gef
	Fluorene	ND	10	ug/L	05/03/04	gef
	Hexachlorobenzene	ND	10	ug/L	05/03/04	gef
	Hexachlorobutadiene	ND	10	ug/L	05/03/04	gef
	Hexachlorocyclopentadiene	ND	10	ug/L	05/03/04	gef
	Hexachloroethane	ND	10	ug/L	05/03/04	gef
	Indeno(123cd)pyrene	ND	10	ug/L	05/03/04	gef
	Isophorone	ND	10	ug/L	05/03/04	gef
	Naphthalene	ND	10	ug/L	05/03/04	gef
	Nitrobenzene	ND	10	ug/L	05/03/04	gef
	n-Nitrosodimethylamine	ND	20	ug/L	05/03/04	gef
	n-Nitrosodi-n-propylamine	ND	10	ug/L	05/03/04	gef
	n-Nitrosodiphenylamine	ND	10	ug/L	05/03/04	gef
	Phenanthrene	ND	10	ug/L	05/03/04	gef
	Pyrene	ND	10	ug/L	05/03/04	gef
	1,2,4-Trichlorobenzene	ND	10	ug/L	05/03/04	gef

1733 North Padre Island Drive • Corpus Christi, TX 78408 • Tel: 361 289 2673 • Fax: 361 289 2471 • www.stl-inc.com

ATTACH #4 PG. 8 OF 9

SEVERN TRENT STL

LABORATORY TEST RESULTS

Job Number: 224507

Date: 05/10/2004

CUSTOMER: Texas Commission on Env. Quality PROJECT: SHEA LADNER ATTN: MarSheila Stafford

Customer Sample ID: 014313-101
Date Sampled.....: 04/28/2004
Time Sampled.....: 11:45
Sample Matrix.....: Water

Laboratory Sample ID: 224507-5
Date Received.....: 04/28/2004
Time Received.....: 17:00

TEST METHOD	PARAMETER/TEST DESCRIPTION	SAMPLE RESULT	REPORTING LIMIT	UNITS	DATE	TECH
	4-Chloro-3-methylphenol	ND	20	ug/L	05/03/04	gef
	2-Chlorophenol	ND	10	ug/L	05/03/04	gef
	2,4-Dichlorophenol	ND	10	ug/L	05/03/04	gef
	2,4-Dimethylphenol	ND	10	ug/L	05/03/04	gef
	2,4-Dinitrophenol	ND	50	ug/L	05/03/04	gef
	4,6-Dinitro-2-methylphenol	ND	50	ug/L	05/03/04	gef
	2-Nitrophenol	ND	10	ug/L	05/03/04	gef
	4-Nitrophenol	ND	50	ug/L	05/03/04	gef
	Pentachlorophenol	ND	50	ug/L	05/03/04	gef
	Phenol	ND	10	ug/L	05/03/04	gef
	2,4,6-Trichlorophenol	ND	10	ug/L	05/03/04	gef
EPA 625 Mod.	Semivolatile Organics-Non-Standard List					
	1,2-Diphenylhydrazine as Azobenzene	ND	10	ug/L	05/03/04	gef
	Benzidine	ND	50	ug/L	05/03/04	gef
	Hexachlorocyclopentadiene	ND	10	ug/L	05/03/04	gef
	n-Nitrosodimethylamine	ND	20	ug/L	05/03/04	gef
	n-Nitrosodiphenylamine	ND	10	ug/L	05/03/04	gef
EPA 624	Volatile Organics					
	Benzene	ND	5	ug/L	04/30/04	krm
	Bromodichloromethane	ND	5	ug/L	04/30/04	krm
	Bromoform (Tribromomethane)	ND	5	ug/L	04/30/04	krm
	Bromomethane (methyl bromide)	ND	5	ug/L	04/30/04	krm
	Carbon Tetrachloride	ND	5	ug/L	04/30/04	krm
	Chlorobenzene	ND	5	ug/L	04/30/04	krm
	Chloroethane (Ethyl chloride)	ND	5	ug/L	04/30/04	krm
	2-Chloroethylvinyl Ether	ND	5	ug/L	04/30/04	krm
	Chloroform	ND	5	ug/L	04/30/04	krm
	Chloromethane (methyl chloride)	ND	5	ug/L	04/30/04	krm
	Dibromochloromethane	ND	5	ug/L	04/30/04	krm
	1,1-Dichloroethane	ND	5	ug/L	04/30/04	krm
	1,2-Dichloroethane (EDC)	ND	5	ug/L	04/30/04	krm
	1,1-Dichloroethene (Vinylidene chloride)	ND	5	ug/L	04/30/04	krm
	trans-1,2-Dichloroethene	ND	5	ug/L	04/30/04	krm
	1,2-Dichloropropane	ND	5	ug/L	04/30/04	krm
	cis-1,3-Dichloropropene	ND	5	ug/L	04/30/04	krm
	trans-1,3-Dichloropropene	ND	5	ug/L	04/30/04	krm
	Ethylbenzene	ND	5	ug/L	04/30/04	krm
	Methylene Chloride (Dichloromethane)	ND	50	ug/L	04/30/04	krm
	1,1,2,2-Tetrachloroethane	ND	5	ug/L	04/30/04	krm
	Tetrachloroethene	ND	5	ug/L	04/30/04	krm
	Toluene	ND	5	ug/L	04/30/04	krm
	1,1,1-Trichloroethane	ND	5	ug/L	04/30/04	krm
	1,1,2-Trichloroethane	ND	5	ug/L	04/30/04	krm
	Trichloroethene	ND	5	ug/L	04/30/04	krm
	Vinyl Chloride (Chloroethene)	ND	5	ug/L	04/30/04	krm

1733 North Padre Island Drive • Corpus Christi, TX 78408 • Tel: 361 289 2673 • Fax: 361 289 2471 • www.stl-inc.com

ATTACH. #4 pg. 9 of 9

0689

Attach #5 pg 1 of 2

TEXAS COMMISSION ON ENVIRONMENTAL QUALITY

Chain of Custody Record

№ 014312

Location: Formosa Plastics
(Do not fill in this shaded area if the facility information must be confidential)

Permit #: 02436

Region:	Organization #:	PCA Code:	Program:	Sampler telephone number:
14	4214	25071	Water	(361) 825-3125

E-Mail ID: ladner

Sampler: (signature)

Sampler: (please print clearly) Shea Ladner

RECEIVED JUN - 1 2004 TCEQ FIELD OPS/REGION 14

Lab ID Numbers	Sample ID	Date	Time	# of Bottles	Grab/ Comp.	Matrix L,S,M,O,T	Cl2	pH	Cond.	Analyses Requested	REMARKS
0402154	~~01~~ 001	4/28/04	11:15	7	G	L	0.0	7.30	N/E	CBOD/TSS, NH3-N, TOC COD, O&G, T. Hg, T. Cr, T. Cu, T. Pb, T. Zn	3X
	-02										
	-03										
0402155	~~01~~ 101	4/28/04	11:45	2	G	L	0.0	7.7	N/E	BOD/TSS, COD	3X
	-05										
	-06										
	-07										
	-08										
	-09										
	-10										

Relinquished by:	Date	Time	Received by:	For Laboratory Use:
	1715	4/28/04		
Relinquished by:	Date	Time	Received by:	Received on ice: (Y) N 0.8 deg. C
Relinquished by:	Date	Time	Received by:	Preservatives: (Y) N
Relinquished by: UPS	Date 4/29/04	Time 10:20	Received by: Jessica Matthews	COC Seal: (Y) N
Shipper name: UPS	Shipper Number: 1ZR26 3A4 21 1050 3310			Seals Intact: (Y) N

TCEQ-10065 (11/02) White (Original) -Lab Yellow-Lab Pink-Contract Lab Manager Goldenrod-Collector Copy

TEXAS COMMISSION ON ENVIRONMENTAL QUALITY

Chain of Custody Record

224507

№ 014313

Location: (Do not fill in this shaded area if the facility information must be confidential)

Permit #: 02436

Region: 14 | Organization #: 4214 | PCA Code: 25021 | Program: Water | Sampler telephone number: (361) 825-3125

E-Mail ID: slacher@tceq.state.tx.us | Sampler: (signature) | Sampler: (please print clearly) Shea Lacher

Lab ID Number	Sample ID	Date	Time	# of Bottles	Grab/ Comp.	Matrix L,S,M,O,T	CL2	pH	Cond.	Analyses Requested	REMARKS
	001A	4/28/04	1115	16	G	L	0.0	7.30	N/A	VOCs; Semi Volatiles, Hex Cr	SX, MS, MSD ↑ VOCs NOT Preserved
	001B	↓	↓	5	G	L	↓	↓	↓	VOCs, Semi-Volatiles	Dup
	001C			4	G	L				VOCs, Semi-Volatiles	F.B.
	001D	↓	↓	2	G	L	↓	↓		VOCs	T.B
	-05										
	101	4/28/04	1145	5	G	L	0.0	7.30	↓	VOCs, Semi-Volatiles	SX
	-07										
	-08										
	-09										
	-10										

Relinquished by:	Date	Time	Received by:
Shea Lacher	4/28/04	1700	Cheyenne Whitmire
Relinquished by:	Date	Time	Received by:
Relinquished by:	Date	Time	Received by:
Relinquished by:	Date	Time	Received by:
Shipper name:	Shipper Number:		

For Laboratory Use

Received on ice: Y N 4 deg. C

Preservative: Y N

COC Seal: Y N N/A

Seals Intact: Y N N/A

TCEQ-10065 (11/02) White (Original) -Lab Yellow-Lab Pink-Contract Lab Manager Goldenrod-Collector Copy

ATTACH #5 pg 2 of 2

TWD/02436/CO

Kathleen Hartnett White, *Chairman*
R. B. "Ralph" Marquez, *Commissioner*
Larry R. Soward, *Commissioner*
Margaret Hoffman, *Executive Director*

TEXAS COMMISSION ON ENVIRONMENTAL QUALITY

Protecting Texas by Reducing and Preventing Pollution

RECEIVED
JUN 25 2004
Air/Toxics & Inspection Coordination Branch
6EN-A

June 22, 2004

CERTIFIED MAIL #7002 0510 0001 8077 2901
RETURN RECEIPT REQUESTED

Mr. R. P. Smith, Vice President/General Manager
Formosa Plastics Corporation, Texas
P. O. Box 700
Point Comfort, Texas 77978

Re: Notice of Violation for the Comprehensive Compliance Investigation at:
Formosa Plastics Corporation, Texas, 201 Formosa Drive, Pt. Comfort (Calhoun County), Texas
TPDES Permit No.: WQ0002436-000; EPA ID No.: TX0085570

Dear Mr. Smith:

On April 28-29, 2004 and May 6, 2004, Ms. Shea Ladner of the Texas Commission on Environmental Quality (TCEQ) Corpus Christi Region Office conducted an investigation of the above-referenced facility to evaluate compliance with applicable requirements for wastewater treatment. Enclosed is a summary which lists the investigation findings. No violations were documented during the investigation of the plant. However, as part of the investigation process, a file review of noncompliance notifications identified outstanding alleged violations for which compliance documentation has already been submitted. Enclosed is a summary which lists the investigation findings. No further response from you is necessary at this time.

In the listing of alleged violations, we have cited applicable requirements, including TCEQ rules. If you would like to obtain a copy of the applicable TCEQ rules, you may contact any of the sources listed in the enclosed brochure entitled "Obtaining TCEQ Rules."

The Texas Commission on Environmental Quality appreciates your assistance in this matter. Please note that the Legislature has granted TCEQ enforcement powers which we may exercise to ensure compliance with environmental regulatory requirements. Self-reported effluent violations may still be subject to enforcement, including penalties, upon review by the Enforcement Division.

If you have additional information that we are unaware of, you have the opportunity to contest the violation documented in this notice. Should you choose to do so, you must notify Corpus Christi Region Office within 10 days from the date of this letter. At that time, Mr. Sinoel B. Contreras will schedule a violation review meeting to be conducted within 21 days from the date of this letter. However, please be advised that if you decide to participate in the violation review process, the TCEQ may still require you to adhere to the compliance schedule included in the attached Summary of Investigation Findings until an official decision is made regarding the status of any or all of the contested violations.

If you or members of your staff have any questions, please feel free to contact Ms. Ladner in the Corpus Christi Region Office at (361) 825-3125.

Sincerely,

Sinoel B. Contreras
Water Section Manager
Corpus Christi Region Office

SBC/SL/aa

cc: Central Records, Building E, MC 212

Enclosures: Summary of Investigation Findings
Obtaining TCEQ Rules

Summary of Investigation Finding

FORMOSA PLASTICS TEXAS
201 FORMOSA DR
POINT COMFORT, CALHOUN COUNTY, TX 77978
Additional ID(s): WQ0002436000
TPDES0085570

Investigation # 276036
Investigation Date: 04/28/2004

ALLEGED VIOLATIONS NOTED AND RESOLVED

Track No: 164028

30 TAC Chapter 305.125(1)

PERMIT WQ0002436-000
Effluent Limitations and Monitoring Requirements, Page 2g, Provision No. 2
Effluent Limitations and Monitoring Requirements, Page 2b, Provision No. 1

Alleged Violation:
Investigation: 276036 Comment Date: 06/17/2004

Failure to comply with the permitted effluent limits. Self-monitoring data shows that the facility exceeded the pH maximum at Outfall 006 in June 2003, and the chloroform daily maximum loading concentration at Outfall 101 in July 2003.

Recommended Corrective Action: Comply with the permitted effluent limits. The pH shall not be less than 6 standard units nor greater than 9 standard units when discharging at Outfall 006. The daily maximum loading concentration of chloroform shall not exceed 1.20 lbs/day at Outfall 101.

Resolution: Formosa Plastics Corporation, Texas provided noncompliance notifications to the TCEQ Region and Central Offices as required. The notifications described mitigation efforts and corrective actions that had been taken to become compliant with the permitted limits. No further information is required at this time.

Please note that self-reported effluent violations may still be subject to enforcement, including penalties, upon review by the Enforcement Division.

Investigation Notes Related to Potential Violations and/or Records Request

Regulated Entity/Site Name	Formosa Plastics Corporation, Tex			**TCEQ Additional ID No. RN No (optional)**	UP 30024360-000		
Investigation Type	CCI	**Contact Made In-House (Y/N)**	N	**Purpose of Investigation**	Anual		
Regulated Entity Contact	Kelly Long			**Telephone No.**		**Date Contacted**	
				Fax No.		**Date Faxed**	

NOTICE: The information provided in this Note is intended to provide clarity to issues that have arisen to the date of this Note during the investigation process between the agency and the company and *does not represent agency findings related to violations*. Any potential or alleged violations discovered after the date of this Note will be communicated by telephone to the regulated entity representative prior to the issuance of a notice of violation or enforcement. Conclusions drawn from this investigation, including additional violations or potential violations discovered (if any) during the course of this investigation, will be documented in this investigation's final report.

Issue		**For Records Request, identify the necessary records, the company contact and date due to the agency. For Alleged and Potential Violation issues, include the rule in question with the clearly described potential problem. Other type of issues: fully describe.**	
No.	**Type[1]**	**Rule Citation (if known)**	**Description of Issue**
1	AV	TPDES Permit OP. 2b + 2g	Effluent limits for chloroform (outfall 101) + pH (006) exceeded. Noted + Resolved
			chloroform on 7/03 pH in June 03

Note 1: Issue Type Can Be One or More of: AV (Alleged Violation), PV (Potential Violation), O (Other), or RR (Records Request)

Document Acknowledgment. Signature on this document establishes only that the regulated entity (company) representative received a copy of this document and associated continuation pages on the date noted. If contact was made by telephone, document will be faxed to regulated entity; therefore, signature not required.

Shea Lodner	5/6/04	M. W. Rivet	5/6/04
Investigator Name (Signed &Printed)	**Date**	**Regulated Entity Representative Name (Signed & Printed)**	**Date**

COPIES: Original: for Regulated Entity Representative, Copy: TCEQ

(Note: use additional pages as necessary) Page 1 of 1