A/A1/CO

October 16, 2015

bhpbilliton
resourcing the future

BHP Billiton Petroleum
3800 East 42nd Street
Odessa, TX 79762
bhpbilliton.com

RECEIVE

OCT 19 2015

Air Toxics & Inspection
Coordination Branch
6EN-A

Mr. Michael Edmiston
Air Section Manager, Region 7
Texas Commission on Environmental Quality
9900 W IH-20, Ste. 100
Midland TX 79706

Re: New Source Performance Standards (40 CFR part 60) Subparts JJJJ
Submittal of Performance Test
BHP Billiton Petroleum (TXLA Operating) Company
Multiple Locations in Region 7
Customer Reference No.: CN604538363

Mr. Edmiston:

Pursuant to 40 CFR 60.4245(d), BHP Billiton Petroleum (TXLA Operating) Company, a subsidiary of BHP Billiton Petroleum (North America), Inc. (BHP), is providing the performance test on the following compressors as required under 40 CFR NSPS JJJJ testing requirements:

Lease Name	RN	Engine Make	Engine Model	Serial Number	County
State Dela 58-T2-38-A	RN107718710	Caterpillar	3306NA	R6S03934	Reeves
State Roberta Regan 57-T2-36-A	RN107620239	Caterpillar	3306TA	R6S03222	Reeves
State Roberta Regan 57-T2-36-A	RN107620239	Caterpillar	3306TA	R6S03629	Reeves
State Barlow 57-T2-47X2-A	RN107828501	Caterpillar	3306TA	R6S00590	Reeves
State Barlow 57-T2-47X2-A	RN107828501	Caterpillar	3306TA	R6S00697	Reeves

Testing was performed between the dates of August 17, 2015 – August 19, 2015. Attached are the reports generated by GHD.

Should you have any questions, please contact Mr. RJ McClure at (432) 367-4351 or via email at RJ.McClure@bhpbilliton.com.

Sincerely,

Jimmy Chilton
Area Operations Superintendent – Permian Production Unit

JB/rjm

Cc: Mr. Ramiro Garcia, Jr., Texas Commission on Environmental Quality, Austin, TX 78711-3087
Environmental Protection Agency, Region 6, Dallas, TX 75202-2733

TRACEANALYSIS
EMISSIONS TESTING LLC

6701 Aberdeen Ave, Ste. 9 Lubbock, TX 79424 (800)-378-1296
Chase.leftwich@traceanalysis.com

40 CFR Part 60, Subpart JJJJ
Performance Test Report
Test Date: 8/18/2015

Source:

Unit: Roberta Reagan A7048
Engine Type: CAT 3306TA
Engine SN: R6S03629
Location: 31.795059, -103.911794

Prepared on behalf of: GHD

Blair Leftwich

8/26/2015

Dr. Blair Leftwich
Chase Leftwich

Date

Definitions:

Fourier Transform Infra-Red (FTIR): A spectroscopic instrument using the infrared portion of the electromagnetic spectrum to obtain the absorption spectrum as function of frequency.

Calibration Transfer Standard (CTS): A certified calibration standard used to verify the instrument stability, when conducting sampling.

Minimum Detectable Concentration (MDC): The minimum concentration of a compound that can be detected by an instrument with a given statistical probability.

Parts Per Million wet (PPMw)

Parts per Million corrected (PPMc): The indicated sample is corrected to 15% O_2.

1.0 Summary

A CAT 3306TA Compressor natural gas fired engine located a t Lat: N 31.795059, Long: W -103.911794 and owned or operated by BHP was tested for emissions of Carbon Monoxide (CO), Oxides of Nitrogen (NOx), Volatile Organic Compounds (VOC's) and Formaldehyde (CH2O). The test was conducted on 8/18/2015 by TraceAnalysis Emissions Testing LLC. The test was conducted using a Fourier Transform Infra-Red (FTIR) gas analyzer, following reference method ASTM D6348–03 as incorporated by reference in 40 CFR Part 60.17. All quality assurance (QA) and quality control (QC) tests required in this method were followed and were within acceptable tolerances (Reference Tables 3 and 4 and Appendix A). Reference Methods 1-4 (Table 1) were utilized to determine the exhaust flow rate. Reference Method 3A (Table 1) is used to determine the Oxygen content. A certified thermocouple determined the stack temperature. The exhaust flow measurements were taken at the point of sampling. The moisture content and Carbon Dioxide (CO_2) were measured throughout the test by the FTIR. The engine brake horsepower was either provided by the operator or was determined through the use of manufacturer's specifications. All tests are conducted at 90% or greater load or at maximum achievable load based upon the current condition at the time of testing. Barometric Pressure was recorded by the FTIR Analyzer and the atmospheric conditions were logged via internet from the closest weather station with official NWS (KBGD) data to the test site.

Table 1: Reference Methods

NOx	Method 7E
CO	Method 10
O2	Method 3A
Flow	Method 1-4
ASTM D6348-03	FTIR
Moisture	FTIR

2.0 Results

The exhaust stream was sampled for three-one hour runs. The exhaust was analyzed by a Fourier Transform Infrared (FTIR) analyzer. The results from the FTIR were captured by data logging software which also performs the required algorithms. Exhaust temperatures are presented in Table 2. The target analyte concentrations from the CAT 3306TA Compressor natural gas fired engine, serial number R6S03629 were compared with the emission limits in 40 CFR Part 60 subpart JJJJ.

Table 2: Summary of Results

Location: State Roberta Reagan Unit 7048 Company: GHD

Date Tested: 8/18/2015 Engine: CAT 3606TA Serial No: R6S03629

Run No.	Carbon monoxide (average)	Units	PPMc @ 15% O_2	Nitrogen oxide NO_x (average)	Units	PPMc @ 15% O_2	VOC (average)	Units	Test Run Start Times	Test Run Finish Times	Test Duration (minutes)	H_2O %d	CO_2 %d	O_2 %d	ΔP_{std} in H_2O	T_s (°C)
1	299	ppm	84	65	ppm	18	0	ppm	8:51	9:51	60.1	9.7	9.9	0.01	0.73	225
2	319	ppm	90	65	ppm	18	0	ppm	9:54	10:54	60.2	10.9	9.9	0.00	0.73	225
3	135	ppm	38	65	ppm	18	0	ppm	10:56	11:57	60.2	11.7	9.7	0.00	0.73	225
Overall	251		71	65		18	0			Average	60.2	10.8	9.8	0.01	0.73	225

	Carbon monoxide	Nitrogen oxide NO_x	VOC
lb/Hr	0.26	0.11	0.00
g/HP-hr	0.57	0.24	0.00
117 Limits	2 g/hp-hr	1 g/hp-hr	0.7 g/hp-hr

Average HP for runs	203		
Pitot Tube Coefficient, C_p	1.00		
Stack static pressure, P_g	1.00 in H_2O	0.0736 in Hg	
Atmospheric pressure at location	911 mbar	26.9049 in Hg	
Stack temperature	577 °C	1071 °F	1530 °R
Stack diameter	5 inches	0.417 feet	0.136 ft^2
Stack pressure, P_s	26.98 in Hg		
M_d = Molecular Weight Stack Gas, dry basis	30.1 lb/lb-mol	Eq 3-1 RM3	
M_s = Molecular Weight Stack Gas, wet basis	27.91 lb/lb-mol	Eq 2-6 RM2	
Stack velocity	103.59 ft/sec		
		Wet Basis	Dry Basis
Stack Flow Rate, Q	14.1 cfs	15820.5 SCFH	14114.6168 DSCFH

Factors Used

Conversion Factor, Kp	85.49	
One lb-mole of ideal gas	386 ft^3	V=RT/P
Ideal Gas Constant	0.730241 ft^3 atm $°R^{-1}$ $lb\text{-}mol^{-1}$	
Standard Temperature, Tstd	528 °R	
Standard Pressure, Pstd	29.92 in Hg	
Grams/lb	453.6 grams	

Engine / Compressor Parameters

Run No.	Manifold Pressure (in Hg)	RPM	Suction	Discharge	Ambient Pressure (mbar)
1	79	1780	129	200	911
2	79	1782	129	200	911
3	79	1784	129	200	911
Average	79	1782	129	200	911

Percent of Load	Stack Diameter (inches)	Stack Elevation (inches)	Stack Velocity (ft/sec)	Stack Temp (°C)	Upstream Stack, A (inches)	Upstream Stack, B (inches)
98	5	24	103.59	577	18	22

3.0 Test Quality Objectives

Table 3 summarizes the test quality assurance parameters used to evaluate original manufacturer minimal detectable concentrations for compounds Acetaldehyde, Ethylene and Nitrogen which can be found in Table 4 in section 4.1 Pre-Test Procedures. The FTIR evaluates known spectra in order to determine the Minimal Detection Concentration (MDC) for the Target Analytes listed in the table below.

Table 3: FTIR Analysis and MDC

Compounds	Infrared Analysis Region (cm -1)	Expected Concentration Range (ppmv)	Measurement System Achievable Minimum Detectable Concentrations (ppmv)	Required Measurement System Accuracy and Precision for Test Application
Target Analytes				
CO	1945-2146	0-1000	>1	1
NO	1884-1989	0-300	>1	1
NO2	2478-2995	0-300	>1	1
VOC	850-1200 2550-2995 3018-3450	0-100	>1	1
Interfering Compounds	Infrared Analysis Region (cm -1)	Expected Concentration Range (%)	Measurement System Achievable Minimum Detectable Concentrations (%)	
CO2	870-1150	0-15	0.1	
Water Vapor	3200-3401	0-25	0.2	

4.0 Quality Assurance

4.1 Pre-Test Procedures

All reference methods pre-test procedures produced results that were within the acceptable limits of the Reference Method ASTM D6348-03 which is the Reference Method used to conduct this 40 CFR 60 Subpart JJJJ test. Data generated during the pre-test procedures are summarized in Table 4. Results of individual quality assurance checks are presented in Appendix B to this report.

Table 4: ASTM Reference method QA/QC Summary

Parameter Measured	Gas	Concentration	Path Length	Equilibration Time	Dilution Factor	% Recovery
Path Length	Ethylene	100.2 ppm	5.0	n/a	n/a	n/a
Mechanical Response Time	Ethylene	100.2 ppm	n/a	40 sec.	n/a	n/a
System Response Time	Acetaldehyde	95.1	n/a	41 sec.	n/a	n/a
Analyte Spike Recovery	Acetaldehyde	99.6	n/a	44 sec.	9.9 9.9 9.8	99 100.8 98.9
System Zero	Nitrogen (UHP)	n/a	n/a	46 sec.	n/a	n/a
Oxygen span Check Response times	High=20.9% O2 Mid=15% Low=Ultra High Pure Nitrogen	PRE 0 to High High to Mid Post 0 to High High to Mid	 42 sec. 36 sec. 39 sec. 39 sec.	<5% Drift held for 60 seconds @ each level		

5.0 Test Runs and Duration

Three separate 1-hour test runs were performed. The final reported analyte concentrations are the average of each 1 hour test run. Data was taken at 20 second intervals. Each 20 second measurement was the average of 200 gas stream samples. A complete data listing of these averages is attached as Appendix D.

6.0 Post-test Quality Assurance

The post-test quality assurance Calibration Transfer Standard (CTS) shows the FTIR instruments stability by performing a CTS Direct test which can be compared to the same test performed in the Pre-Test QA/QC procedures (Step 7 in Appendix B. This data establishes the analyzer was working properly and performed as it should throughout the process.) Table 5 shows the results of CTS direct.

Table 5: Post Test CTS QA/QC results

Post-Test QA/QC Results		
Step: 24 Post CTS Direct to Analyzer		
CTS Bottle Concentration	100.2 ppm	
CTS Compound. CTS Round Concentration Avera	99.12 ppm	
Tolerance	5.1	
Difference between measured and expected	1.08	

7.0 Additional Information and Reporting

Following is a Schematic Diagram of the sampling system utilized during the testing process.
The testing instrumentation is housed in an enclosed vehicle which is located approximately 30 feet from the source. A heated sample line (30 feet in length) is attached to the inlet of analyzer system and the source effluent discharges through the FTIR outlet.

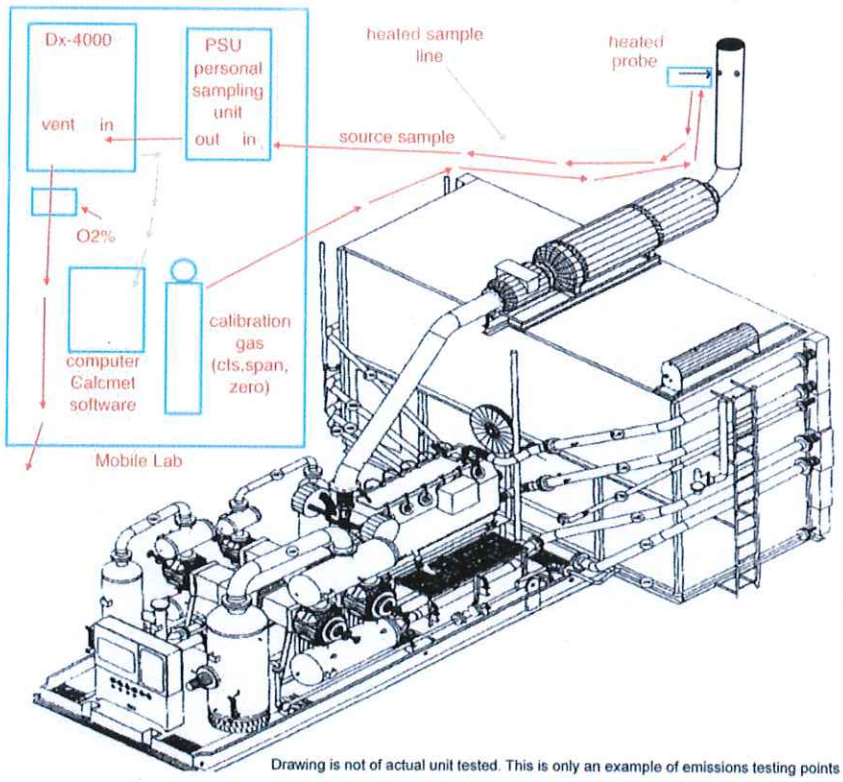

Drawing is not of actual unit tested. This is only an example of emissions testing points

Appendix A: Calibration Gas

Zero Gas	Ultra High Purity Nitrogen (UHP)	99.9% Pure
Spike Gas	Acetaldehyde/SF6 Tracer NO balance	98.53 ppm/ 10.24 SF6
CTS	Ethylene NO balance	100.2 ppm
Oxygen	Mid-range	15%
Oxygen	High-range	20.9%

*Calibration Gas Certificates are attached

Appendix B: Pretest QA/QC Results

Pre-Test QA/QC Results

Pre-Test Baseline Results	Average	Residual
001 Water vapor H20	-0.01	0.0002
002 Carbon dioxide CO2	0	0.0002
003 Nitrogen monoxide NO	0.01	0.0001
201 NOx	0.01	0.0001
202 VOC	0.01	0

CTS Direct to Analyzer		
CTS bottle concentration	100.2	ppm
CTS Compound. CTS Round Concentration Average	99.3	ppm
Tolerance	5.1	
Difference between measured and expected	0.9	

Pre-Test System Zero	Average	Residual
Carbon Monoxide	0	0.0001
Nitrogen monoxide	0	0.0001
Nitrogen dioxide	0.00	0.0002
NOx	0.00	0.0001
VOC	0.01	0.0002

Pre-Test System CTS & Mechanical Response Time		
Mechanical Response time	40	seconds
CTS Bottle Concentration	100.2	ppm
CTS Compound. CTS Round Concentration Average	98.8	ppm
Tolerance	5.0	
Difference between measured and expected	1.4	

System (Equilibration) Response Time Target (Spike)		
Equilibrium response time	41	seconds
Spike reported	97.57	
Spike expected	98.53	

System (Zero) Response Time		
System zero response time	44	seconds
System response time	46	seconds

APPENDIX C

Calculation Sample Sheet Example

Flow Volume - Q

$$Q=3600\ (1-B_W)V_S A((T_{STD}P_S)/(T_{S(ABS)}P_{STD}))$$

$$Q=(3600)(1-11.7/100)(80.11)(0.049)((528)(0.0339)/(897)(29.92))$$

$$Q=6503\ \text{DCSFH}$$

Grams/HP-Hr sample calculation for Run 1

NOx

$$ER=\frac{C_d*1.912*0.001*Q*0.028*T}{\text{HP-hr}}\qquad \frac{213*1.912*0.001*6503*0.028*1}{200}=0.37\ \text{g/HP-hr}$$

CO

$$ER=\frac{C_d*1.164*0.001*Q*0.028*T}{\text{HP-hr}}\qquad \frac{13*1.164*0.001*6503*0.028*1}{200}=0.01\ \text{g/HP-hr}$$

VOC

$$ER=\frac{C_d*1.833*0.001*Q*0.028*T}{\text{HP-hr}}\qquad \frac{43*1.833*0.001*6503*0.028*1}{200}=0.07\ \text{g/HP-hr}$$

ER=	Emission Rate measured in Grams per Horsepower hour
C_d=	Measured Parts Per Million on a dry basis
HP-Hr=	Brake Horsepower
Q=	Stack gas volumetric flow rate in dry standard cubic meter/hr
T=	Time of Test Run in Hr.
P_S=	Absolute Stack Pressure, in Hg
$T_{S(ABS)}$=	Absolute stack temperature, ^oR
T_{STD}=	Standard absolute temperature, 528 ^oR
P_{STD}=	Standard absolute pressure, 29.92 in Hg
A=	cross-sectional area of stack, ft^2
V_S=	average stack gas velocity (ft/sec)
B_W=	water vapor in gas stream, per cent

Equations published in 40 CFR Part 60.4244

Appendix D: Run Summary Data

Summary Source 1 Run

	H2O	Residua	CO2	Residual	CO	Residua	No	Residual
Baseline	-0.04	0.0002	-0.04	0.0001	0	0.0001	0.03	0.0001
Source	9.69	0.0038	9.87	0.0254	298.58	0.0057	58.39	0.0070

Summary Source 2 Run

	H2O	Residua	CO2	Residual	CO	Residua	No	Residual
Baseline	0.03	0.0002	-0.18	0.0001	0	0.0001	0	0.0001
Source	10.94	0.0041	9.92	0.0281	318.86	0.0061	57.89	0.0071

Summary Source 3 Run

	H2O	Residua	CO2	Residual	CO	Residua	No	Residual
Baseline	0.04	0.0002	-0.21	0.0001	0	0.0001	0	0.0001
Source	11.73	0.0046	9.66	0.0163	135.32	0.0049	59.86	0.0071

Summary Source 1 Run

	NO2`	Residua	CH4	Residual	N20	Residua	NH3	Residual
Baseline	0	0.0002	0.43	0.0001	0	0.0001	0.06	0.0001
Source	6.70	0.0075	255.23	0.0235	9.24	0.0058	31.07	0.0435

Summary Source 2 Run

	NO2`	Residua	CH4	Residual	N20	Residua	NH3	Residual
Baseline	0	0.0002	3.04	0.0001	0.01	0.0001	0	0.0001
Source	6.66	0.0084	283.42	0.0258	9.26	0.0063	35.26	0.0485

Summary Source 3 Run

	NO2`	Residua	CH4	Residual	N20	Residua	NH3	Residual
Baseline	0	0.0002	2.09	0.0001	0.01	0.0001	0	0.0001
Source	4.80	0.0063	215.66	0.0151	12.04	0.0049	30.12	0.0468

Summary Source 1 Run

	Ethylene C2H4	Residua	Ethane C2H6	Residual	Formaldehyde HCOH	Residua	Acetaldehyde CH3CHO	Residual
Baseline	0.1	0.0002	0	0.0001	0	0.0001	0.03	0.0001
Source	255.23	0.0021	0.78	0.0236	0.78	0.0230	0.98	0.0468

Summary Source 2 Run

	Ethylene C2H4	Residua	Ethane C2H6	Residual	Formaldehyde HCOH	Residua	Acetaldehyde CH3CHO	Residual
Baseline	0.17	0.0002	0	0.0001	0.02	0.0001	0	0.0001
Source	283.42	0.0020	0.68	0.0258	0.36	0.0251	0.09	0.0485

Summary Source 3 Run

	Ethylene C2H4	Residua	Ethane C2H6	Residual	Formaldehyde HCOH	Residua	Acetaldehyde CH3CHO	Residual
Baseline	0.19	0.0002	0	0.0001	0.02	0.0001	0	0.0001
Source	215.66	0.0019	0.12	0.0152	0.45	0.0147	1.00	0.0468

Summary Source 1 Run

	Sulfur Hexafluoride SF6	Residua	NOx	Residual	VOC	Residua	Ambient Pressure	Residual
Baseline	0.1	0.0002	0.03	0.0001	0	0.0001	912	0
Source	0.14	0.2250	0.00	0.0000	0.00	0.0000	913	0

Summary Source 2 Run

	Sulfur Hexafluoride SF6	Residua	NOx	Residual	VOC	Residua	Ambient Pressure	Residual
Baseline	0.17	0.0002	0	0.0001	0	0.0001	913	0
Source	0.11	0.2387	0.00	0.0000	0.00	0.0000	912	0

Summary Source 3 Run

	Sulfur Hexafluoride SF6	Residua	NOx	Residual	VOC	Residua	Ambient Pressure	Residual
Baseline	0.19	0.0002	0	0.0001	0	0.0001	912	0
Source	0.12	0.2176	0.00	0.0000	0.00	0.0000	912	0

Summary Source 1 Run

	Oxygen	Residua	Sample Cell Temp.°C	Residual
Baseline	0	0.0001	180	0
Source	0.01	0	180	0

Summary Source 2 Run

	Oxygen	Residua	Sample Cell Temp.°C	Residual
Baseline	0	0.0001	180	0
Source	0.00	0	180	0

Summary Source 3 Run

	Oxygen	Residua	Sample Cell Temp.°C	Residual
Baseline	0	0.0001	180	0
Source	0.00	0	180	0

Airgas

Airgas USA, LLC
616 Miller Cut Off Road
Laporte, TX 77571
(281) 842-6900 Fax: (281) 471-2518
www.airgas.com

CERTIFICATE OF ANALYSIS

Grade of Product: CERTIFIED STANDARD-SPEC

Customer: LUBBOCK OXYGEN & MEDICAL GASES - LUBBOCK , TX

Part Number: X03NI87C15A0003

Cylinder Number: CC442061

Laboratory: ASG - LaPorte Mix (SAP) - TX

Analysis Date: Apr 30, 2014

Lot Number: 126-400357698-1

Reference Number: 126-400357698-1

Cylinder Volume: 145.4 CF

Cylinder Pressure: 2015 PSIG

Valve Outlet: 590

Expiration Date: Apr 30, 2017

Product composition verified by direct comparison to calibration standards traceable to N.I.S.T. weights and/or N.I.S.T. Gas Mixture reference materials.

ANALYTICAL RESULTS

Component	Requested Concentration	Actual Concentration (Mole %)	Analytical Uncertainty
ETHYLENE	100.0 PPM	100.2 PPM	+/- 2%
OXYGEN	12.00 %	12.01 %	+/- 2%
NITROGEN	Balance		

Notes:
LUBBOCK OXYGEN & MEDICAL GASES

Approved for Release

Airgas

Airgas USA, LLC
616 Miller Cut Off Road
Laporte, TX 77571
(281) 842-6900 Fax: (281) 471-2518
www.airgas.com

CERTIFICATE OF ANALYSIS

Grade of Product: CERTIFIED STANDARD-SPEC

Customer:	LUBBOCK OXYGEN & MEDICAL GASES-LUBBOCK, TX		
Part Number:	X03NI99C15A0040	Reference Number:	126-400357687-1
Cylinder Number:	CC366978	Cylinder Volume:	144.4 Cubic Feet
Laboratory:	ASG - LaPorte Mix (SAP) - TX	Cylinder Pressure:	2015 PSIG
Analysis Date:	May 07, 2014	Valve Outlet:	350
Lot Number:	126-400357687-1		

Expiration Date: May 07, 2015

Product composition verified by direct comparison to calibration standards traceable to N.I.S.T. weights and/or N.I.S.T. Gas Mixture reference materials.

ANALYTICAL RESULTS

Component	Requested Concentration	Actual Concentration (Mole %)	Analytical Uncertainty
SULFUR HEXAFLUORIDE	10.00 PPM	10.24 PPM	+/- 5%
ACETALDEHYDE	100.0 PPM	98.53 PPM	+/- 2%
NITROGEN	Balance		

Notes:
LUBBOCK OXYGEN & MEDICAL GASES

Approved for Release

CATERPILLAR®

G3306 Gas Petroleum Engine

108 (NA)/151 (TA) bkW
[145 (NA)/203 (TA) bhp]
1800 rpm

0.5% O_2 Rating

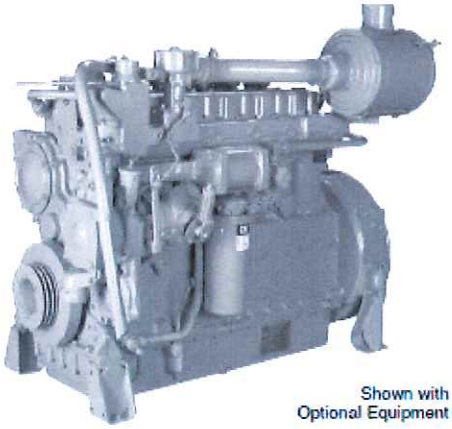

Shown with Optional Equipment

CAT® ENGINE SPECIFICATIONS

In-Line 6, 4-Stroke-Cycle

Bore	121 mm (4.75 in.)
Stroke	152 mm (6.0 in.)
Displacement	10.5 L (638 cu. in.)
Aspiration	Naturally Aspirated or Turbocharged-Aftercooled
Governor and Protection	Hydra-mechanical
Combustion	Catalyst
Engine Weight, net dry (approx)	948 kg (2090 lb)
Power Density	6.3 kg/kW (10.3 lb/bhp)
Power per Displacement	19.3 bhp/L
Jacket Water Capacity	20 L (5.3 gal)
Lube Oil System (refill)	45.1 L (11.9 gal)
Oil Change Interval	750 hours
Rotation (from flywheel end)	Counterclockwise
Flywheel and Flywheel Housing	SAE No. 1
Flywheel Teeth	156

FEATURES

Engine Design
- Proven reliability and durability
- Ability to burn a wide spectrum of gaseous fuels
- Robust diesel strength design prolongs life and lowers owning and operating costs
- Broad operating speed range

Emissions
- Rich burn engine design easily meets emission requirements
- Meets U.S. EPA Spark Ignited Stationary NSPS emissions for 2007/8 and 2010/11 with the use of aftermarket AFRC and TWC

Full Range of Attachments
Large variety of factory-installed engine attachments reduces packaging time

Testing
Every engine is full-load tested to ensure proper engine performance.

Gas Engine Rating Pro
GERP is a PC-based program designed to provide site performance capabilities for Cat® natural gas engines for the gas compression industry. GERP provides engine data for your site's altitude, ambient temperature, fuel, engine coolant heat rejection, performance data, installation drawings, spec sheets, and pump curves.

Product Support Offered Through Global Cat Dealer Network
More than 2,200 dealer outlets

Cat factory-trained dealer technicians service every aspect of your petroleum engine

Cat parts and labor warranty

Preventive maintenance agreements available for repair-before-failure options

S•O•S℠ program matches your oil and coolant samples against Caterpillar set standards to determine:
- Internal engine component condition
- Presence of unwanted fluids
- Presence of combustion by-products
- Site-specific oil change interval

Over 80 Years of Engine Manufacturing Experience
Over 60 years of natural gas engine production

Ownership of these manufacturing processes enables Caterpillar to produce high quality, dependable products.
- Cast engine blocks, heads, cylinder liners, and flywheel housings
- Machine critical components
- Assemble complete engine

Web Site
For all your petroleum power requirements, visit www.catoilandgas.cat.com.

CATERPILLAR®

G3306 GAS PETROLEUM ENGINE

108 (NA)/151 (TA) bkW [145 (NA)/203 (TA) bhp]

STANDARD EQUIPMENT

Air Inlet System
Air cleaner — intermediate duty, dry
Air cleaner rain cap (shipped loose)
Service indicator

Control System
Governor — hydra-mechanical (optional on TA)
Throttle control, mechanical
Slide and lock (non-governed units)

Cooling System
Thermostats and housing — full open temperature 97° C (207° F)
Jacket water pump — gear-driven, centrifugal, non-self-priming
Aftercooler water pump — gear-driven, centrifugal, non-self-priming
Aftercooler core, for treated water

Exhaust System
Exhaust manifolds, watercooled
Exhaust elbow — dry, 127 mm (5 in)

Flywheels and Flywheel Housings
Flywheel — SAE No. 1
Flywheel housing — SAE No. 1
SAE standard rotation

Fuel System
Gas pressure regulator
Requires 12-25 psi gas
Natural gas carburetor

Ignition System
Altronic V ignition system

Instrumentation
Instrument panel, LH
Oil pressure
Coolant temperature
Hour meter
Inlet air temperature

Lube System
Crankcase breather — top mounted
Oil cooler
Oil filter
Oil pan — full sump
Oil filler and dipstick

Mounting System
Shutoffs
Low oil pressure
High coolant temperature
High inlet air temperature
Overspeeds — 2
Electronic
Mechanical speed switch

Protection System
See Mandatory Attachments

General
Paint — Cat yellow
Crankshaft vibration damper and drive pulley
Lifting eyes

OPTIONAL EQUIPMENT

Charging System
Battery chargers
Charging alternators
Charging alternators f/u/w agricultural engine
Ammeter gauge
Ammeter gauge and wiring

Control System
PSG Woodward governor
Hydra-mechanical governor f/u/w agricultural engines
Vernier and positive locking control
Carburetor control removal

Cooling System
Air-to-Air aftercooler conversion
Aftercooler group
Expansion tank
Heat exchanger and expansion tank
Radiators
Blower fans
Suction fans
Fan drives
Fan adapters
Belt tightener

Exhaust System
Flexible fittings
Elbows
Flanges
Pipes
Rain caps
Mufflers

Fuel System
Catalyst conversion group
Low pressure gas conversion
Fuel filter

Ignition System
Altronic III
CSA shielded ignition
Wiring harness
Dual timing

Instrumentation
Gauges and instrument panels

Lube System
Lubricating oil

Mounting System
Vibration isolators

Power Take-Offs
Auxiliary drive pulleys
Auxiliary pump
Enclosed clutch
Clutch support
Flywheel stub shaft
Front stub shaft

Protection System
Mechanical shutoff

Starting System
Air pressure regulator
Air silencer
Starting aids
Battery sets — 12-volt, dry
Battery sets — 24-volt, dry
Battery cables
Battery rack
Gas starting motor
Electric starting motor

General
Tool set

CATERPILLAR®

G3306 GAS PETROLEUM ENGINE

108 (NA)/151 (TA) bkW [145 (NA)/203 (TA) bhp]

TECHNICAL DATA

G3306 Gas Petroleum Engine (0.5% O_2 Rating) — 1800 rpm

		DM5053-07	DM5202-04
Aspiration		Naturally Aspirated	Turbocharged/Aftercooled
Engine Power			
@ 100% Load	bkW (bhp)	108 (145)	151 (203)
@ 75% Load	bkW (bhp)	81 (109)	113 (152)
Engine Speed	rpm	1800	1800
Max Altitude @ Rated Torque and 38°C (100°F)	m (ft)	0	0
Speed Turndown @ Max Altitude, Rated Torque, and 38°C (100°F)	%	44	33
AC Temperature	°C (°F)	N/A	54 (130)
Emissions*			
NOx	g/bkW-hr (g/bhp-hr)	18.08 (13.48)	22.22 (16.57)
CO	g/bkW-hr (g/bhp-hr)	18.05 (13.46)	22.22 (16.57)
NMHC	g/bkW-hr (g/bhp-hr)	130 (0.33)	0.24 (0.18)
Exhaust O_2	% dry	0.5	0.5
CO_2	g/bkW-hr (g/bhp-hr)	651 (485)	685 (571)
VOC**	g/bkW-hr (g/bhp-hr)	0.3 (0.22)	0.16 (0.12)
Fuel Consumption***			
@ 100% Load	MJ/bkW-hr (Btu/bhp-hr)	11 (7775)	11.46 (8098)
@ 75% Load	MJ/bkW-hr (Btu/bhp-hr)	11.77 (8318)	11.95 (8444)
Heat Balance			
Heat Rejection to Jacket Water			
@ 100% Load	bkW (Btu/min)	106.27 (6049)	158.9 (9045)
@ 75% Load	bkW (Btu/min)	91.99 (5236)	132.4 (7534)
Heat Rejection from Aftercooler			
@ 100% Load	bkW (Btu/min)	N/A	9.05 (515)
@ 75% Load	bkW (Btu/min)	N/A	3.65 (208)
Heat Rejection to Exhaust			
@ 100% Load (LHV to 77° F / 25° C)	bkW (Btu/mn)	84.98 (4837)	117.62 (6695)
@ 75% Load (LHV to 77°) (LHV to 77° F / 25° C)	bkW (Btu/mn)	66.01 (3757)	90.39 (5145)
Exhaust System			
Exhaust Gas Flow Rate			
@ 100% Load	m^3/min (cfm)	19.2 (678)	27.47 (970)
@ 75% Load	m^3/min (cfm)	15.06 (532)	21.38 (755)
Exhaust Stack Temperature			
@ 100% Load	°C (°F)	593.9 (1101)	573.3 (1064)
@ 75% Load	°C (°F)	575 (1067)	554.4 (1030)
Intake System			
Air Inlet Flow Rate			
@ 100% Load	m^3/min (scfm)	5.89 (208)	8.64 (305)
@ 75% Load	m^3/min (scfm)	4.73 (167)	6.88 (243)
Gas Pressure	kPag (psig)	10.3-69 (1.5-10)	82.7-172.4 (12-24.9)

*at 100% load and speed, all values are listed as not to exceed

**Volatile organic compounds as defined in U.S. EPA 40 CFR 60, subpart JJJJ

***ISO 3046/1

CATERPILLAR®

G3306 GAS PETROLEUM ENGINE

108 (NA)/151 (TA) bkW [145 (NA)/203 (TA) bhp]

GAS PETROLEUM ENGINE

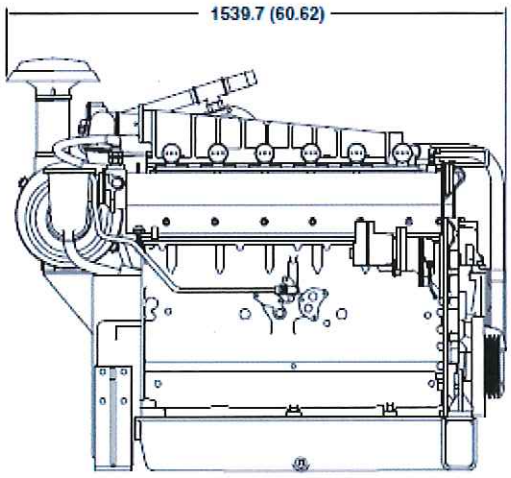

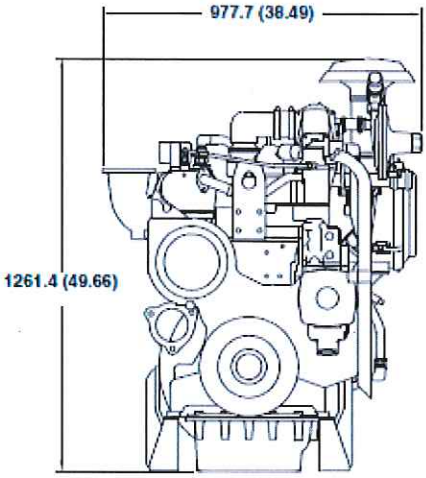

DIMENSIONS		
Length	mm (in)	1505 (59)
Width	mm (in)	1208 (48)
Height	mm (in)	978 (39)
Shipping Weight	kg (lb)	948 (2090)

Note: General configuration not to be used for installation. See general dimension drawing 5N-6097 for detail.

Dimensions are in mm (inches).

RATING DEFINITIONS AND CONDITIONS

Engine performance is obtained in accordance with SAE J1995, ISO3046/1, BS5514/1, and DIN6271/1 standards.

Transient response data is acquired from an engine/generator combination at normal operating temperature and in accordance with ISO3046/1 standard ambient conditions. Also in accordance with SAE J1995, BS5514/1, and DIN6271/1 standard reference conditions.

Conditions: Power for gas engines is based on fuel having an LHV of 83.74 kJ/L (905 Btu/cu ft) at 101 kPa (29.91 in. Hg) and 15° C (59° F). Fuel rate is based on a cubic meter at 100 kPa (29.61 in. Hg) and 15.6° C (60.1° F). Air flow is based on a cubic foot at 100 kPa (29.61 in. Hg) and 25° C (77° F). Exhaust flow is based on a cubic foot at 100 kPa (29.61 in. Hg) and stack temperature.

Materials and specifications are subject to change without notice. The International System of Units (SI) is used in this publication.
CAT, CATERPILLAR, their respective logos, S·O·S, "Caterpillar Yellow" and the "Power Edge" trade dress, as well as corporate and product identity used herein, are trademarks of Caterpillar and may not be used without permission.

TMI Reference No.: DM5053-07, DM5202-04
LEHW0026-00 (11-09)
Supersedes LEHW7566-01

©2009 Caterpillar
All rights reserved.

Weather History for KPEQ

Nearest airport to Pecos, TX.

Tuesday, August 18, 2015

	Actual	Average	Record
Temperature			
Mean Temperature	**87** °F	-	
Max Temperature	**103** °F	**97** °F	**109** °F (1978)
Min Temperature	**71** °F	**67** °F	**59** °F (1967)
Cooling Degree Days	22		
Growing Degree Days	37 (Base 50)		
Moisture			
Dew Point	**52** °F		
Average Humidity	32		
Maximum Humidity	49		
Minimum Humidity	19		
Precipitation			
Precipitation	**0.00** in	-	- ()
Sea Level Pressure			
Sea Level Pressure	**29.81** in		
Wind			
Wind Speed	**9** mph (ESE)		
Max Wind Speed	**20** mph		
Max Gust Speed	**26** mph		
Visibility	**10** miles		
Events	Thunderstorm		

Averages and records for this station are not official NWS values.

T – Trace of Precipitation, MM – Missing Value

Source: NWS Daily Summary

TRACEANALYSIS
EMISSIONS TESTING LLC

6701 Aberdeen Ave, Ste. 9 Lubbock, TX 79424 (800)-378-1296
Chase.leftwich@traceanalysis.com

40 CFR Part 60, Subpart JJJJ
Performance Test Report
Test Date: 8-17-2015

Source:
Unit: State Dela
Engine Type: CAT 3306 NA
Engine SN: R6S03934
Location: 31.782114, -104.030438

Prepared on behalf of: GHD

Blair Leftwich

8/27/15

Dr. Blair Leftwich
Chase Leftwich

Date

Definitions:

Fourier Transform Infra-Red (FTIR): A spectroscopic instrument using the infrared portion of the electromagnetic spectrum to obtain the absorption spectrum as function of frequency.

Calibration Transfer Standard (CTS): A certified calibration standard used to verify the instrument stability, when conducting sampling.

Minimum Detectable Concentration (MDC): The minimum concentration of a compound that can be detected by an instrument with a given statistical probability.

Parts Per Million wet (PPMw)

Parts per Million corrected (PPMc): The indicated sample is corrected to 15% O_2.

1.0 Summary

A CAT 3306 NA Compressor natural gas fired engine located a t Lat: N 31.782114, Long: W -104.030438 and owned or operated by BHP was tested for emissions of Carbon Monoxide (CO), Oxides of Nitrogen (NOx), Volatile Organic Compounds (VOC's) and Formaldehyde (CH2O). The test was conducted on 8/17/15 by TraceAnalysis Emissions Testing LLC. The test was conducted using a Fourier Transform Infra-Red (FTIR) gas analyzer, following reference method ASTM D6348–03 as incorporated by reference in 40 CFR Part 60.17. All quality assurance (QA) and quality control (QC) tests required in this method were followed and were within acceptable tolerances (Reference Tables 3 and 4 and Appendix A). Reference Methods 1-4 (Table 1) were utilized to determine the exhaust flow rate. Reference Method 3A (Table 1) is used to determine the Oxygen content. A certified thermocouple determined the stack temperature. The exhaust flow measurements were taken at the point of sampling. The moisture content and Carbon Dioxide (CO_2) were measured throughout the test by the FTIR. The engine brake horsepower was either provided by the operator or was determined through the use of manufacturer's specifications. All tests are conducted at 90% or greater load or at maximum achievable load based upon the current condition at the time of testing. Barometric Pressure was recorded by the FTIR Analyzer and the atmospheric conditions were logged via internet from the closest weather station with official NWS (KBGD) data to the test site.

Table 1: Reference Methods

NOx	Method 7E
CO	Method 10
O2	Method 3A
Flow	Method 1-4
ASTM D6348-03	FTIR
Moisture	FTIR

2.0 Results

The exhaust stream was sampled for three-one hour runs. The exhaust was analyzed by a Fourier Transform Infrared (FTIR) analyzer. The results from the FTIR were captured by data logging software which also performs the required algorithms. Exhaust temperatures are presented in Table 2. The target analyte concentrations from the CAT 3306 NA Compressor natural gas fired engine, serial number R6S03934 were compared with the emission limits in 40 CFR Part 60 subpart JJJJ.

Table 2: Summary of Results

Location: State Dela | Company: GHD

Date Tested: 8/17/2015 | Engine: 3306NA | Serial No: R6S03934

Run No.	Carbon monoxide (average)	Units	PPMc @ 15% O_2	Nitrogen oxide NO_x (average)	Units	PPMc @ 15% O_2	VOC (average)	Units	Test Run Start Times	Test Run Finish Times	Test Duration (minutes)	H_2O %d	CO_2 %d	O_2 %d	ΔP_{std} in H_2O	T_s (°C)
1	487	ppm	138	164	ppm	46	0	ppm	14:50	15:50	60.2	11.2	7.3	0	0.73	225
2	594	ppm	168	177	ppm	50	0	ppm	15:53	16:54	60.2	12.6	7.9	0	0.73	225
3	568	ppm	160	172	ppm	49	0	ppm	16:56	17:56	60.2	12.7	7.6	0	0.73	225
Overall	550		155	171		48	0			Average	60.2	12.2	7.6	0.00	0.73	225

	Carbon monoxide	Nitrogen oxide NO_x	VOC
lb/Hr	0.57	0.29	0.00
g/HP-hr	1.76	0.90	0.00
117 Limits	2 g/hp-hr	1 g/hp-hr	0.7 g/hp-hr

Average HP for runs	145		
Pitot Tube Coefficient, C_p	1.00		
Stack static pressure, P_g	0.73 in H_2O	0.0537 in Hg	
Atmospheric pressure at location	914 mbar	26.9935 in Hg	
Stack temperature	537 °c	999 °F	1458 °R
Stack diameter	5 inches	0.417 feet	0.136 ft^2
Stack pressure, P_s	27.05 in Hg		
M_d = Molecular Weight Stack Gas, dry basis	30.1 lb/lb-mol	Eq 3-1 RM3	
M_s = Molecular Weight Stack Gas, wet basis	27.91 lb/lb-mol	Eq 2-6 RM2	
Stack velocity	101.00 ft/sec		
		Wet Basis	Dry Basis
Stack Flow Rate, Q	13.8 cfs	16227.0 SCFH	14249.9494 DSCFH

Factors Used

Conversion Factor, Kp	85.49	
One lb-mole of ideal gas	386 ft^3	V=RT/P
Ideal Gas Constant	0.730241 ft^3 atm $°R^{-1}$ $lb\text{-}mol^{-1}$	
Standard Temperature, Tstd	528 °R	
Standard Pressure, Pstd	29.92 in Hg	
Grams/lb	453.6 grams	

Engine / Compressor Parameters

Run No.	Manifold Pressure (in Hg)	RPM	Suction	Discharge	Ambient Pressure (mbar)
1	52	1698	23	44	914
2	52	1698	23	44	914
3	52	1698	23	44	914
Average	52	1698	23	44	914

Percent of Load	Stack Diameter (inches)	Stack Elevation (inches)	Stack Velocity (ft/sec)	Stack Temp (°C)	Upstream Stack, A (inches)	Upstream Stack, B (inches)
94	5	24	101.00	537	18	22

3.0 Test Quality Objectives

Table 3 summarizes the test quality assurance parameters used to evaluate original manufacturer minimal detectable concentrations for compounds Acetaldehyde, Ethylene and Nitrogen which can be found in Table 4 in section 4.1 Pre-Test Procedures. The FTIR evaluates known spectra in order to determine the Minimal Detection Concentration (MDC) for the Target Analytes listed in the table below.

Table 3: FTIR Analysis and MDC

Compounds	Infrared Analysis Region (cm -1)	Expected Concentration Range (ppmv)	Measurement System Achievable Minimum Detectable Concentrations (ppmv)	Required Measurement System Accuracy and Precision for Test Application
Target Analytes				
CO	1945-2146	0-1000	>1	1
NO	1884-1989	0-300	>1	1
NO2	2478-2995	0-300	>1	1
VOC	850-1200 2550-2995 3018-3450	0-100	>1	1
Interfering Compounds	Infrared Analysis Region (cm -1)	Expected Concentration Range (%)	Measurement System Achievable Minimum Detectable Concentrations (%)	
CO2	870-1150	0-15	0.1	
Water Vapor	3200-3401	0-25	0.2	

4.0 Quality Assurance

4.1 Pre-Test Procedures

All reference methods pre-test procedures produced results that were within the acceptable limits of the Reference Method ASTM D6348-03 which is the Reference Method used to conduct this 40 CFR 60 Subpart JJJJ test. Data generated during the pre-test procedures are summarized in Table 4. Results of individual quality assurance checks are presented in Appendix B to this report.

Table 4: ASTM Reference method QA/QC Summary

Parameter Measured	Gas	Concentration	Path Length	Equilibration Time	Dilution Factor	% Recovery
Path Length	Ethylene	100.2 ppm	5.0	n/a	n/a	n/a
Mechanical Response Time	Ethylene	100.2 ppm	n/a	46 sec.	n/a	n/a
System Response Time	Acetaldehyde	95.1	n/a	46 sec.	n/a	n/a
Analyte Spike Recovery	Acetaldehyde	99.6	n/a	53 sec.	9.9 9.9 9.8	99 100.8 98.9
System Zero	Nitrogen (UHP)	n/a	n/a	54 sec.	n/a	n/a
Oxygen span Check Response times	High=20.9% O2 Mid=15% Low=Ultra High Pure Nitrogen	PRE 0 to High High to Mid Post 0 to High High to Mid	 44 sec. 27 sec. 37 sec. 34 sec.	<5% Drift held for 60 seconds @ each level		

5.0 Test Runs and Duration

Three separate 1-hour test runs were performed. The final reported analyte concentrations are the average of each 1 hour test run. Data was taken at 20 second intervals. Each 20 second measurement was the average of 200 gas stream samples. A complete data listing of these averages is attached as Appendix D.

6.0 Post-test Quality Assurance

The post-test quality assurance Calibration Transfer Standard (CTS) shows the FTIR instruments stability by performing a CTS Direct test which can be compared to the same test performed in the Pre-Test QA/QC procedures (Step 7 in Appendix B. This data establishes the analyzer was working properly and performed as it should throughout the process.) Table 5 shows the results of CTS direct.

Table 5: Post Test CTS QA/QC results

Post-Test QA/QC Results		
Step: 24 Post CTS Direct to Analyzer		
CTS Bottle Concentration	100.2 ppm	
CTS Compound. CTS Round Concentration Avera	102.27 ppm	
Tolerance	5.1	
Difference between measured and expected	(2.07)	

7.0 Additional Information and Reporting

Following is a Schematic Diagram of the sampling system utilized during the testing process.
The testing instrumentation is housed in an enclosed vehicle which is located approximately 30 feet from the source. A heated sample line (30 feet in length) is attached to the inlet of analyzer system and the source effluent discharges through the FTIR outlet.

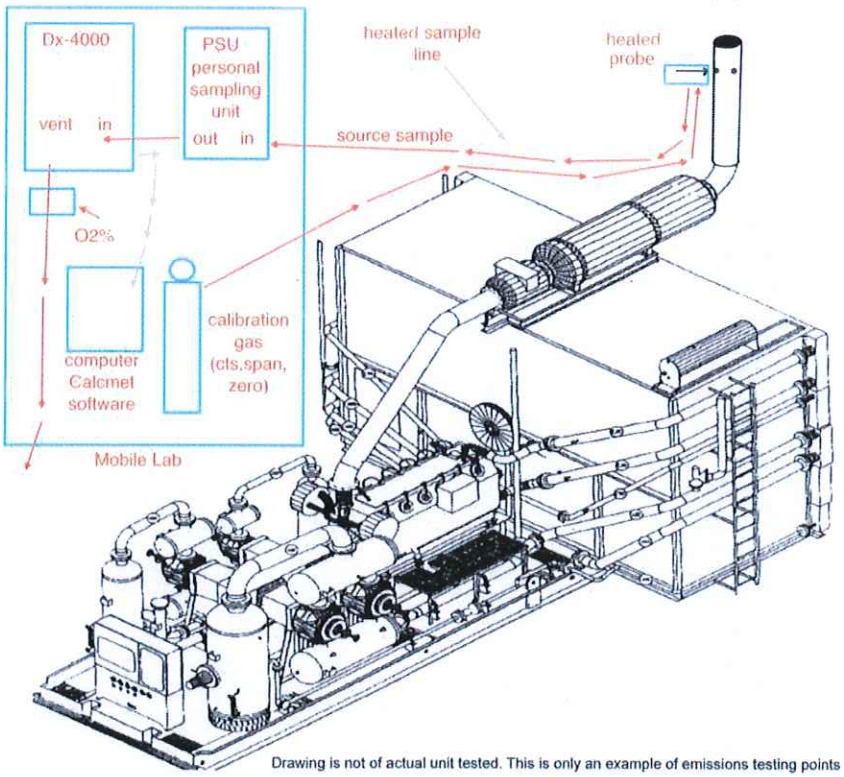

Appendix A: Calibration Gas

Zero Gas	Ultra High Purity Nitrogen (UHP)	99.9% Pure
Spike Gas	Acetaldehyde/SF6 Tracer NO balance	98.53 ppm/ 10.24 SF6
CTS	Ethylene NO balance	100.2 ppm
Oxygen	Mid-range	15%
Oxygen	High-range	20.9%

*Calibration Gas Certificates are attached

Appendix B: Pretest QA/QC Results

Pre-Test QA/QC Results

Pre-Test Baseline Results	Average	Residual
001 Water vapor H20	-0.05	0.0002
002 Carbon dioxide CO2	0.15	0.0002
003 Nitrogen monoxide NO	0.03	0.0001
201 NOx	0	0.0001
202 VOC	0	0

CTS Direct to Analyzer	
CTS bottle concentration	100.2 ppm
CTS Compound. CTS Round Concentration Average	96.4 ppm
Tolerance	5.1
Difference between measured and expected	3.8

Pre-Test System Zero	Average	Residual
Carbon Monoxide	0.35	0.0001
Nitrogen monoxide	0	0.0001
Nitrogen dioxide	0.00	0.0002
NOx	0.00	0.0001
VOC	0	0.0002

Pre-Test System CTS & Mechanical Response Time	
Mechanical Response time	42 seconds
CTS Bottle Concentration	100.2 ppm
CTS Compound. CTS Round Concentration Average	96.5 ppm
Tolerance	5.0
Difference between measured and expected	3.7

System (Equilibration) Response Time Target (Spike)	
Equilibrium response time	43 seconds
Spike reported	99.87
Spike expected	98.53

System (Zero) Response Time	
System zero response time	45 seconds
System response time	47 seconds

APPENDIX C

Calculation Sample Sheet Example

Flow Volume - Q

$$Q=3600\ (1-B_W)V_S A((T_{STD}P_S)/(T_{S(ABS)}P_{STD}))$$

$$Q=(3600)(1-11.7/100)(80.11)(0.049)((528)(0.0339)/(897)(29.92))$$

$$Q=6503\ \text{DCSFH}$$

Grams/HP-Hr sample calculation for Run 1

NOx

$$ER=\frac{C_d*1.912*0.001*Q*0.028*T}{\text{HP-hr}} \qquad \frac{213*1.912*0.001*6503*0.028*1}{200} = 0.37\ \text{g/HP-hr}$$

CO

$$ER=\frac{C_d*1.164*0.001*Q*0.028*T}{\text{HP-hr}} \qquad \frac{13*1.164*0.001*6503*0.028*1}{200} = 0.01\ \text{g/HP-hr}$$

VOC

$$ER=\frac{C_d*1.833*0.001*Q*0.028*T}{\text{HP-hr}} \qquad \frac{43*1.833*0.001*6503*0.028*1}{200} = 0.07\ \text{g/HP-hr}$$

ER=	Emission Rate measured in Grams per Horsepower hour
C_d=	Measured Parts Per Million on a dry basis
HP-Hr=	Brake Horsepower
Q=	Stack gas volumetric flow rate in dry standard cubic meter/hr
T=	Time of Test Run in Hr.
P_S=	Absolute Stack Pressure, in Hg
$T_{S(ABS)}$=	Absolute stack temperature, °R
T_{STD}=	Standard absolute temperature, 528 °R
P_{STD}=	Standard absolute pressure, 29.92 in Hg
A=	cross-sectional area of stack, ft^2
V_S=	average stack gas velocity (ft/sec)
B_W=	water vapor in gas stream, per cent

Equations published in 40 CFR Part 60.4244

Appendix D: Run Summary Data

Summary Source 1 Run

	H2O	Residua	CO2	Residual	CO	Residua	No	Residual
Baseline	0.03	0.0002	-0.08	0.0001	2.14	0.0001	0.48	0.0001
Source	11.22	0.0058	7.29	0.0018	487.47	0.0106	159.06	0.0102

Summary Source 2 Run

	H2O	Residua	CO2	Residual	CO	Residua	No	Residual
Baseline	0.02	0.0002	-0.33	0.0001	2.3	0.0001	0.49	0.0001
Source	12.59	0.0062	7.91	0.0020	594.14	0.0124	175.07	0.0108

Summary Source 3 Run

	H2O	Residua	CO2	Residual	CO	Residua	No	Residual
Baseline	0.03	0.0002	-0.37	0.0001	2.3	0.0001	0.52	0.0001
Source	12.74	0.0061	7.65	0.0022	568.49	0.0120	171.53	0.0108

Summary Source 1 Run

	NO2`	Residua	CH4	Residual	N20	Residua	NH3	Residual
Baseline	0.26	0.0002	0	0.0001	0	0.0001	0.73	0.0001
Source	4.49	0.0094	9.04	0.0019	2.20	0.0116	30.31	0.0496

Summary Source 2 Run

	NO2`	Residua	CH4	Residual	N20	Residua	NH3	Residual
Baseline	0	0.0002	0	0.0001	0	0.0001	0.74	0.0001
Source	1.58	0.0068	11.99	0.0019	2.79	0.0132	25.30	0.0547

Summary Source 3 Run

	NO2`	Residua	CH4	Residual	N20	Residua	NH3	Residual
Baseline	0	0.0002	0	0.0001	0	0.0001	0.6	0.0001
Source	0.78	0.0064	12.57	0.0022	2.70	0.0124	24.23	0.0543

Summary Source 1 Run

	Ethylene C2H4	Residua	Ethane C2H6	Residual	Formaldehyde HCOH	Residua	Acetaldehyde CH3CHO	Residual
Baseline	0.02	0.0002	1.62	0.0001	0.01	0.0001	0.74	0.0001
Source	9.04	0.0038	50.61	0.0019	50.61	0.0033	0.13	0.0543

Summary Source 2 Run

	Ethylene C2H4	Residua	Ethane C2H6	Residual	Formaldehyde HCOH	Residua	Acetaldehyde CH3CHO	Residual
Baseline	0.2	0.0002	2.01	0.0001	0.04	0.0001	0.49	0.0001
Source	11.99	0.0020	58.28	0.0019	1.23	0.0034	0.07	0.0547

Summary Source 3 Run

	Ethylene C2H4	Residua	Ethane C2H6	Residual	Formaldehyde HCOH	Residua	Acetaldehyde CH3CHO	Residual
Baseline	0.2	0.0002	1.8	0.0001	0.04	0.0001	0.52	0.0001
Source	12.57	0.0019	56.74	0.0022	1.42	0.0034	0.07	0.0543

Summary Source 1 Run

	Sulfur Hexafluoride SF6	Residua	NOx	Residual	VOC	Residua	Ambient Pressure	Residual
Baseline	0.02	0.0002	0.74	0.0001	0	0.0001	912	0
Source	1.33	0.2227	0.00	0.0000	0.00	0.0000	911	0

Summary Source 2 Run

	Sulfur Hexafluoride SF6	Residua	NOx	Residual	VOC	Residua	Ambient Pressure	Residual
Baseline	0.2	0.0002	0	0.0001	0	0.0001	911	0
Source	1.27	0.2446	0.00	0.0000	0.00	0.0000	910	0

Summary Source 3 Run

	Sulfur Hexafluoride SF6	Residua	NOx	Residual	VOC	Residua	Ambient Pressure	Residual
Baseline	0.2	0.0002	0	0.0001	0	0.0001	910	0
Source	1.32	0.2392	0.00	0.0000	0.00	0.0000	910	0

Summary Source 1 Run

	Oxygen	Residua	Sample Cell Temp.°C	Residual
Baseline	0	0.0001	180	0
Source	0.00	0	180	0

Summary Source 2 Run

	Oxygen	Residua	Sample Cell Temp.°C	Residual
Baseline	0	0.0001	180	0
Source	0.00	0	180	0

Summary Source 3 Run

	Oxygen	Residua	Sample Cell Temp.°C	Residual
Baseline	0	0.0001	180	0
Source	0.00	0	180	0

Airgas

Airgas USA, LLC
616 Miller Cut Off Road
Laporte, TX 77571
(281) 842-6900 Fax: (281) 471-2518
www.airgas.com

CERTIFICATE OF ANALYSIS

Grade of Product: CERTIFIED STANDARD-SPEC

Customer:	LUBBOCK OXYGEN & MEDICAL GASES - LUBBOCK , TX		
Part Number:	X03NI87C15A0003	Reference Number:	126-400357698-1
Cylinder Number:	CC442061	Cylinder Volume:	145.4 CF
Laboratory:	ASG - LaPorte Mix (SAP) - TX	Cylinder Pressure:	2015 PSIG
Analysis Date:	Apr 30, 2014	Valve Outlet:	590

Lot Number: 126-400357698-1

Expiration Date: Apr 30, 2017

Product composition verified by direct comparison to calibration standards traceable to N.I.S.T. weights and/or N.I.S.T. Gas Mixture reference materials.

ANALYTICAL RESULTS

Component	Requested Concentration	Actual Concentration (Mole %)	Analytical Uncertainty
ETHYLENE	100.0 PPM	100.2 PPM	+/- 2%
OXYGEN	12.00 %	12.01 %	+/- 2%
NITROGEN	Balance		

Notes:
LUBBOCK OXYGEN & MEDICAL GASES

Approved for Release

Airgas

Airgas USA, LLC
616 Miller Cut Off Road
Laporte, TX 77571
(281) 842-6900 Fax: (281) 471-2518
www.airgas.com

CERTIFICATE OF ANALYSIS

Grade of Product: CERTIFIED STANDARD-SPEC

Customer:	LUBBOCK OXYGEN & MEDICAL GASES-LUBBOCK, TX		
Part Number:	X03NI99C15A0040	Reference Number:	126-400357687-1
Cylinder Number:	CC366978	Cylinder Volume:	144.4 Cubic Feet
Laboratory:	ASG - LaPorte Mix (SAP) - TX	Cylinder Pressure:	2015 PSIG
Analysis Date:	May 07, 2014	Valve Outlet:	350
Lot Number:	126-400357687-1		

Expiration Date: May 07, 2015

Product composition verified by direct comparison to calibration standards traceable to N.I.S.T. weights and/or N.I.S.T. Gas Mixture reference materials.

ANALYTICAL RESULTS

Component	Requested Concentration	Actual Concentration (Mole %)	Analytical Uncertainty
SULFUR HEXAFLUORIDE	10.00 PPM	10.24 PPM	+/- 5%
ACETALDEHYDE	100.0 PPM	98.53 PPM	+/- 2%
NITROGEN	Balance		

Notes:
LUBBOCK OXYGEN & MEDICAL GASES

Approved for Release

CATERPILLAR®

G3306 Gas Petroleum Engine

108 (NA)/151 (TA) bkW
[145 (NA)/203 (TA) bhp]
1800 rpm

0.5% O_2 Rating

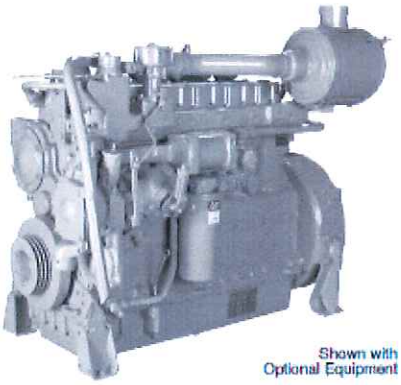

Shown with Optional Equipment

CAT® ENGINE SPECIFICATIONS

In-Line 6, 4-Stroke-Cycle

Bore	121 mm (4.75 in.)
Stroke	152 mm (6.0 in.)
Displacement	10.5 L (638 cu. in.)
Aspiration	Naturally Aspirated or Turbocharged-Aftercooled
Governor and Protection	Hydra-mechanical
Combustion	Catalyst
Engine Weight, net dry (approx)	948 kg (2090 lb)
Power Density	6.3 kg/kW (10.3 lb/bhp)
Power per Displacement	19.3 bhp/L
Jacket Water Capacity	20 L (5.3 gal)
Lube Oil System (refill)	45.1 L (11.9 gal)
Oil Change Interval	750 hours
Rotation (from flywheel end)	Counterclockwise
Flywheel and Flywheel Housing	SAE No. 1
Flywheel Teeth	156

FEATURES

Engine Design
- Proven reliability and durability
- Ability to burn a wide spectrum of gaseous fuels
- Robust diesel strength design prolongs life and lowers owning and operating costs
- Broad operating speed range

Emissions
- Rich burn engine design easily meets emission requirements
- Meets U.S. EPA Spark Ignited Stationary NSPS emissions for 2007/8 and 2010/11 with the use of aftermarket AFRC and TWC

Full Range of Attachments
Large variety of factory-installed engine attachments reduces packaging time

Testing
Every engine is full-load tested to ensure proper engine performance.

Gas Engine Rating Pro
GERP is a PC-based program designed to provide site performance capabilities for Cat® natural gas engines for the gas compression industry. GERP provides engine data for your site's altitude, ambient temperature, fuel, engine coolant heat rejection, performance data, installation drawings, spec sheets, and pump curves.

Product Support Offered Through Global Cat Dealer Network
More than 2,200 dealer outlets

Cat factory-trained dealer technicians service every aspect of your petroleum engine

Cat parts and labor warranty

Preventive maintenance agreements available for repair-before-failure options

S•O•S℠ program matches your oil and coolant samples against Caterpillar set standards to determine:
- Internal engine component condition
- Presence of unwanted fluids
- Presence of combustion by-products
- Site-specific oil change interval

Over 80 Years of Engine Manufacturing Experience
Over 60 years of natural gas engine production

Ownership of these manufacturing processes enables Caterpillar to produce high quality, dependable products.
- Cast engine blocks, heads, cylinder liners, and flywheel housings
- Machine critical components
- Assemble complete engine

Web Site
For all your petroleum power requirements, visit www.catoilandgas.cat.com.

CATERPILLAR®

G3306 GAS PETROLEUM ENGINE

108 (NA)/151 (TA) bkW [145 (NA)/203 (TA) bhp]

STANDARD EQUIPMENT

Air Inlet System
Air cleaner — intermediate duty, dry
Air cleaner rain cap (shipped loose)
Service indicator

Control System
Governor — hydra-mechanical (optional on TA)
Throttle control, mechanical
Slide and lock (non-governed units)

Cooling System
Thermostats and housing — full open temperature 97° C (207° F)
Jacket water pump — gear-driven, centrifugal, non-self-priming
Aftercooler water pump — gear-driven, centrifugal, non-self-priming
Aftercooler core, for treated water

Exhaust System
Exhaust manifolds, watercooled
Exhaust elbow — dry, 127 mm (5 in)

Flywheels and Flywheel Housings
Flywheel — SAE No. 1
Flywheel housing — SAE No. 1
SAE standard rotation

Fuel System
Gas pressure regulator
Requires 12-25 psi gas
Natural gas carburetor

Ignition System
Altronic V ignition system

Instrumentation
Instrument panel, LH
Oil pressure
Coolant temperature
Hour meter
Inlet air temperature

Lube System
Crankcase breather — top mounted
Oil cooler
Oil filter
Oil pan — full sump
Oil filler and dipstick

Mounting System
Shutoffs
Low oil pressure
High coolant temperature
High inlet air temperature
Overspeeds — 2
Electronic
Mechanical speed switch

Protection System
See Mandatory Attachments

General
Paint — Cat yellow
Crankshaft vibration damper and drive pulley
Lifting eyes

OPTIONAL EQUIPMENT

Charging System
Battery chargers
Charging alternators
Charging alternators f/u/w agricultural engine
Ammeter gauge
Ammeter gauge and wiring

Control System
PSG Woodward governor
Hydra-mechanical governor f/u/w agricultural engines
Vernier and positive locking control
Carburetor control removal

Cooling System
Air-to-Air aftercooler conversion
Aftercooler group
Expansion tank
Heat exchanger and expansion tank
Radiators
Blower fans
Suction fans
Fan drives
Fan adapters
Belt tightener

Exhaust System
Flexible fittings
Elbows
Flanges
Pipes
Rain caps
Mufflers

Fuel System
Catalyst conversion group
Low pressure gas conversion
Fuel filter

Ignition System
Altronic III
CSA shielded ignition
Wiring harness
Dual timing

Instrumentation
Gauges and instrument panels

Lube System
Lubricating oil

Mounting System
Vibration isolators

Power Take-Offs
Auxiliary drive pulleys
Auxiliary pump
Enclosed clutch
Clutch support
Flywheel stub shaft
Front stub shaft

Protection System
Mechanical shutoff

Starting System
Air pressure regulator
Air silencer
Starting aids
Battery sets — 12-volt, dry
Battery sets — 24-volt, dry
Battery cables
Battery rack
Gas starting motor
Electric starting motor

General
Tool set

CATERPILLAR®

G3306 GAS PETROLEUM ENGINE

108 (NA)/151 (TA) bkW [145 (NA)/203 (TA) bhp]

TECHNICAL DATA

G3306 Gas Petroleum Engine (0.5% O_2 Rating) — 1800 rpm

		DM5053-07	DM5202-04
Aspiration		Naturally Aspirated	Turbocharged/Aftercooled
Engine Power			
@ 100% Load	bkW (bhp)	108 (145)	151 (203)
@ 75% Load	bkW (bhp)	81 (109)	113 (152)
Engine Speed	rpm	1800	1800
Max Altitude @ Rated Torque and 38°C (100°F)	m (ft)	0	0
Speed Turndown @ Max Altitude, Rated Torque, and 38°C (100°F)	%	44	33
AC Temperature	°C (°F)	N/A	54 (130)
Emissions*			
NOx	g/bkW-hr (g/bhp-hr)	18.08 (13.48)	22.22 (16.57)
CO	g/bkW-hr (g/bhp-hr)	18.05 (13.46)	22.22 (16.57)
NMHC	g/bkW-hr (g/bhp-hr)	130 (0.33)	0.24 (0.18)
Exhaust O_2	% dry	0.5	0.5
CO_2	g/bkW-hr (g/bhp-hr)	651 (485)	685 (571)
VOC**	g/bkW-hr (g/bhp-hr)	0.3 (0.22)	0.16 (0.12)
Fuel Consumption***			
@ 100% Load	MJ/bkW-hr (Btu/bhp-hr)	11 (7775)	11.46 (8098)
@ 75% Load	MJ/bkW-hr (Btu/bhp-hr)	11.77 (8318)	11.95 (8444)
Heat Balance			
Heat Rejection to Jacket Water			
@ 100% Load	bkW (Btu/min)	106.27 (6049)	158.9 (9045)
@ 75% Load	bkW (Btu/min)	91.99 (5236)	132.4 (7534)
Heat Rejection from Aftercooler			
@ 100% Load	bkW (Btu/min)	N/A	9.05 (515)
@ 75% Load	bkW (Btu/min)	N/A	3.65 (208)
Heat Rejection to Exhaust			
@ 100% Load (LHV to 77° F / 25° C)	bkW (Btu/mn)	84.98 (4837)	117.62 (6695)
@ 75% Load (LHV to 77°) (LHV to 77° F / 25° C)	bkW (Btu/mn)	66.01 (3757)	90.39 (5145)
Exhaust System			
Exhaust Gas Flow Rate			
@ 100% Load	m^3/min (cfm)	19.2 (678)	27.47 (970)
@ 75% Load	m^3/min (cfm)	15.06 (532)	21.38 (755)
Exhaust Stack Temperature			
@ 100% Load	°C (°F)	593.9 (1101)	573.3 (1064)
@ 75% Load	°C (°F)	575 (1067)	554.4 (1030)
Intake System			
Air Inlet Flow Rate			
@ 100% Load	m^3/min (scfm)	5.89 (208)	8.64 (305)
@ 75% Load	m^3/min (scfm)	4.73 (167)	6.88 (243)
Gas Pressure	kPag (psig)	10.3-69 (1.5-10)	82.7-172.4 (12-24.9)

*at 100% load and speed, all values are listed as not to exceed

**Volatile organic compounds as defined in U.S. EPA 40 CFR 60, subpart JJJJ

***ISO 3046/1

CATERPILLAR®

G3306 GAS PETROLEUM ENGINE

108 (NA)/151 (TA) bkW [145 (NA)/203 (TA) bhp]

GAS PETROLEUM ENGINE

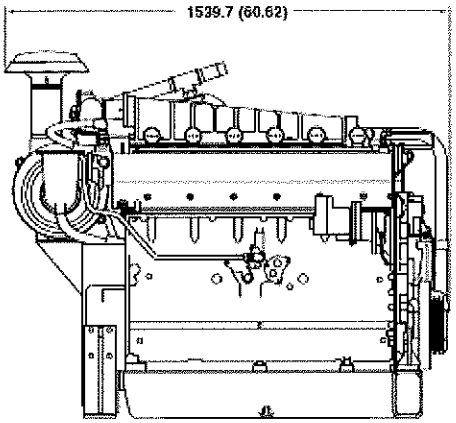

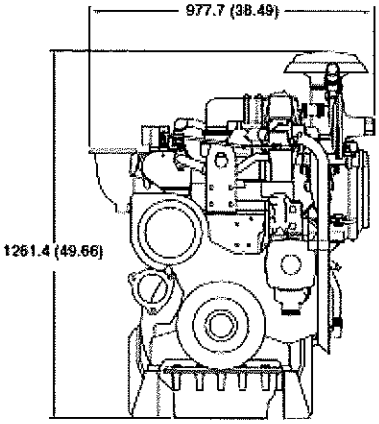

DIMENSIONS		
Length	mm (in)	1505 (59)
Width	mm (in)	1208 (48)
Height	mm (in)	978 (39)
Shipping Weight	kg (lb)	948 (2090)

Note: General configuration not to be used for installation. See general dimension drawing 5N-6097 for detail.

Dimensions are in mm (inches).

RATING DEFINITIONS AND CONDITIONS

Engine performance is obtained in accordance with SAE J1995, ISO3046/1, BS5514/1, and DIN6271/1 standards.

Transient response data is acquired from an engine/generator combination at normal operating temperature and in accordance with ISO3046/1 standard ambient conditions. Also in accordance with SAE J1995, BS5514/1, and DIN6271/1 standard reference conditions.

Conditions: Power for gas engines is based on fuel having an LHV of 83.74 kJ/L (905 Btu/cu ft) at 101 kPa (29.91 in. Hg) and 15° C (59° F). Fuel rate is based on a cubic meter at 100 kPa (29.61 in. Hg) and 15.6° C (60.1° F). Air flow is based on a cubic foot at 100 kPa (29.61 in. Hg) and 25° C (77° F). Exhaust flow is based on a cubic foot at 100 kPa (29.61 in. Hg) and stack temperature.

Weather History for KPEQ

Nearest airport to Pecos, TX.

Monday, August 17, 2015

	Actual	Average	Record
Temperature			
Mean Temperature	**82** °F	-	
Max Temperature	**100** °F	**97** °F	- (-1)
Min Temperature	**65** °F	**67** °F	- (-1)
Cooling Degree Days	17		
Growing Degree Days	32 (Base 50)		
Moisture			
Dew Point	**54** °F		
Average Humidity	43		
Maximum Humidity	76		
Minimum Humidity	17		
Precipitation			
Precipitation	**0.00** in	-	- ()
Sea Level Pressure			
Sea Level Pressure	**29.95** in		
Wind			
Wind Speed	**5** mph (SE)		
Max Wind Speed	**16** mph		
Max Gust Speed	**22** mph		
Visibility	**10** miles		
Events			

Averages and records for this station are not official NWS values.

AL/AL/CO

AIR HYGIENE, INC.

Testing Solutions for a Better World

RECEIVED

APR 21 2015

Permits & Inspection Branch
EPA

April 17, 2015

United States Environmental Protection Agency EPA, Region 6
Office of Enforcement and Permits Review
1445 Ross Avenue, Suite 1200
Dallas, Texas 75202
(800) 887-6063

To Whom It May Concern,

Enclosed please find one copy of the 40 CFR 60, Subpart JJJJ Emissions Testing Protocol for eight Caterpillar G3306TA Reciprocating Combustion Engines prepared for XTO Energy, Inc. at the various compressor stations and engine locations in Carter and Marshall County, Oklahoma. If you have any questions, comments, or concerns please feel free to contact me at (918) 307-8865 office x4170, (918) 407-5168 cell, or tom@airhygiene.com.

Sincerely,

Thomas K. Graham, PE, QSTI
Director of Education

Encl. (1)

CC
project file xto-15-multi.ok-eng#9
William Payne, XTO (electronic only)

Table 2.1
Site Information

Location	Unit	Permit #	County	Latitude	Longitude
Gene 1-9H04	805711	2014-1116-NOI	Carter	34.304370	-97.102620
Potter 1-13H	805712	Pending	Carter	34.291170	-97.150380
Gordon 1-10H14	805861	2014-0209-NOI	Carter	34.304140	-97.494090
Williams 1-22H	805859	2011-715-O	Carter	34.275200	-97.086390
Herriot 1-34H	805227	2011-1101-O	Carter	34.246210	-96.986170
Walls 1-27H26	805654	2013-1467-NOI	Carter	34.261090	-97.073890
Thompson 1-31H	805863	2011-1104-O	Marshall	34.158590	-96.814240
Watkins 1-3H2	805710	2012-1021-O	Marshall	34.068890	-96.658030

2.3 Test Contractor Information

Company:	Air Hygiene International, Inc.
Contact Person:	Danny Parr, Director of Operations
Mailing Address:	1600 W Tacoma Street
	Broken Arrow, Oklahoma 74012
Office:	(918) 307-8865
Cell:	(918) 809-8947
Fax:	(918) 307-9131
E-mail:	danny@airhygiene.com
Website:	www.airhygiene.com

2.4 Expected Test Start Date

Testing is anticipated to begin on Monday, June 1, 2015 and continue until all units are tested. Notification of changes will be made by XTO.

2.5 Testing Schedule

The following schedule indicates specific activities required to be done each day; however, the schedule may require flexibility and will be compacted or extended as necessary. If there are no operational delays, this schedule can be completed as detailed by the testing crew. The details below describe the activities to be conducted on the engines. Specific unit test order, for multiple sources, will be determined by XTO.

Pre-test Activities	Due Date
1. Prepare draft test protocol (Air Hygiene)	>30 days prior to testing
2. Submit final approved test plan to EPA and ODEQ (Air Hygiene)	≥30 days prior to testing
3. Receive site safety training	day of arrival for setup

A/A/co

AIR HYGIENE, INC.

Testing Solutions for a Better World

RECEIVE

OCT 1 7 2014

Air Toxics & Inspection
Coordination Branc
6EN-A

October 16, 2014

EPA Region 6
1445 Ross Avenue, Suite 1200
Dallas, Texas 75202
800-887-6063

To Whom It May Concern,

Enclosed please find one copy of the 40 CFR 60, Subpart JJJJ and ODEQ emission testing protocol for one Caterpillar and four Cummins combustion engines prepared for XTO Energy, Inc. at the Veronica, Miller, Shelby, Enderco, and Hart compressor stations in Carter and Love Counties, Oklahoma. If you have any questions, comments, or concerns please feel free to contact me at (918) 307-8865 office, or rbaker@airhygiene.com.

Sincerely,

Randall P Baker

Randall Baker, PE
Training Coordinator

Encl. (1, bound)

CC
project file xto-14-multi.ok-eng#13
William Payne, XTO (electronic only)

40 CFR 60, SUBPART JJJJ AND ODEQ EMISSION TESTING PROTOCOL

FOR ONE CATERPILLAR AND FOUR CUMMINS COMBUSTION ENGINES

PREPARED FOR XTO ENERGY, INC.

AT THE VERONICA, MILLER, SHELBY, ENDERCO, and HART COMPRESSOR STATIONS IN CARTER AND LOVE COUNTIES, OKLAHOMA

Oklahoma Department of Environmental Quality Permit Numbers
Veronica: Pending
Miller: 2013-0854-NOI
Shelby: 2013-1555-NOI
Enderco: 2013-2124-NOI
Hart: 2013-2068-NOI

October 15, 2014

Prepared By:

Randall P Baker

Randall Baker, PE, Training Coordinator

rev - 0

Table of Contents

1.0 INTRODUCTION 1
- **1.1 General Facility Description** 1
- **1.2 Reason for Testing** 1

2.0 SUMMARY 2
- **2.1 Owner Information** 2
- **2.2 Site Information** 2
- **2.3 Test Contractor Information** 2
- **2.4 Expected Test Start Date** 2
- **2.5 Testing Schedule** 3
- **2.6 Test Report Content** 3
- **2.7 Equipment and Procedures** 4
- **2.8 Proposed Variations** 4
- **2.9 Sampling Strategy** 5

Appendix A QA/QC PROGRAM

Appendix B TEST EQUIPMENT CONFIGURATION AND DESCRIPTION
- Figure 1 – Emissions Testing Setup
- Table 1 – Testing Matrix
- Table 2 – Analytical Instrumentation
- Table 3 – Analytical Instrumentation Testing Configuration

Appendix C STACK DRAWINGS

Appendix D EXAMPLE TEMPLATES AND CALCULATIONS

Appendix E STATEMENT OF QUALIFICATIONS

1.0 INTRODUCTION

1.1 General Facility Description

XTO is a natural gas gathering and processing company headquartered in Fort Worth, Texas. The company's business unit covers parts of Oklahoma. Various compressor stations are located in the system, each used to gather, treat, and transfer natural gas from wellheads to major pipeline arteries. The interests of this test protocol is the Veronica, Miller, Shelby, Enderco, and Hart Compressor Stations. The equipment to be tested is specified in the following table.

Table 1.1
Engine Specifications

Station	Make	Model	Unit	Serial No	Manf.	HP
Veronica 1/2/3/4	Cummins	KTA 19GC	6641	37259794	11/8/2013	380
Miller 2-5 2H35	Cummins	KTA 19GC	6684	37260845	3/6/2014	380
Shelby 1/4-02H01	Cummins	KTA 19GC	6638	37259469	9/23/2013	380
Enderco 1-4 / Franki 1-4H9	Cummins	KTA 19GC	6785	37261694	5/19/2014	380
Hart 1-03H	Caterpillar	G3306TA	805637	R6S02346	2/1/2014	203

The engines are restricted to combusting natural gas only. The engines exhaust to the atmosphere through approximately 4 to 12 inch diameter stacks approximately 8 to 20 feet above grade level. Fuel flow meters should be located on each engine. However, if the engine is not equipped with a fuel flow meter, manufacturer specifications will be used for calculations. Each engine is equipped with ladder access to the catalyst and stack level.

1.2 Reason for Testing

The compressors are subject to emission testing requirements set forth in the standards designated by the United States Environmental Protection Agency (EPA) Title 40, Code of Federal Regulations, Part 60 (40CFR60), Subpart JJJJ, and the Oklahoma Department of Environmental Quality (ODEQ) operating permits. The Subpart JJJJ and ODEQ emissions limits for these engines are listed in the following table.

Table 1.2
ODEQ/Subpart JJJJ Limits

Station	Unit	NOx Limit	CO Limit	VOC Limit
Veronica 1/2/3/4	6641	1.0 g/hp*hr or 82 ppm@15%O2	2.0 g/hp*hr or 270 ppm@15%O2	0.7 g/hp*hr or 60 ppm@15%O2
Miller 2-5 2H35	6684	1.0 g/hp*hr or 82 ppm@15%O2	2.0 g/hp*hr or 270 ppm@15%O2	0.7 g/hp*hr or 60 ppm@15%O2
Shelby 1/4-02H01	6638	1.0 g/hp*hr or 82 ppm@15%O2	2.0 g/hp*hr or 270 ppm@15%O2	0.7 g/hp*hr or 60 ppm@15%O2
Enderco 1-4 / Franki 1-4H9	6785	1.0 g/hp*hr or 82 ppm@15%O2	2.0 g/hp*hr or 270 ppm@15%O2	0.7 g/hp*hr or 60 ppm@15%O2
Hart 1-03H	805637	1.0 g/hp*hr or 82 ppm@15%O2	2.0 g/hp*hr or 270 ppm@15%O2	0.7 g/hp*hr or 60 ppm@15%O2

As such, all engines will be tested for nitrogen oxides (NOx), carbon monoxide (CO), oxygen (O_2) and volatile organic compounds (VOCs) with the units operating within 10 percent of the rated load.

2.0 SUMMARY

2.1 Owner Information

Company:	XTO Energy, Inc.
Contact Person:	William J. Payne
Mailing Address:	810 Houston Street Fort Worth, Texas 76102
Office:	(817) 885-3165
Cell:	(903) 391-1456
Fax:	(817) 885-1847
Email:	William_Payne@XTOEnergy.com

2.2 Site Information

Station	County	Lat. / Long.	Permit No.
Veronica 1/2/3/4	Marshall	34.1281515 / -96.6755406	Pending
Miller 2-5 2H35	Carter	34.2443800 / -97.0605100	2013-0854-NOI
Shelby 1/4-02H01	Marshall	34.0673500 / -96.6399000	2013-1555-NOI
Enderco 1-4 / Franki 1-4H9	Love	33.9698900 / -97.1992200	2013-2124-NOI
Hart 1-03H	Love	33.9700000 / -97.1923900	2013-2068-NOI

2.3 Test Contractor Information

Company:	Air Hygiene International, Inc.
Contact Person:	Danny Parr, Director of Operations
Mailing Address:	1600 West Tacoma Broken Arrow, Oklahoma 74012
Office:	(918) 994-4173
Cell:	(918) 809-8947
Fax:	(918) 307-9131
E-mail:	danny@airhygiene.com
Website:	www.airhygiene.com

2.4 Expected Test Start Date

Testing is anticipated to begin on Monday, November 17, 2014 and continue until all units are tested with additional notification provided by XTO, as necessary.

2.5 Testing Schedule

The following schedule indicates specific activities required to be done each day; however, the schedule may require flexibility and will be compacted or extended as necessary. Specific site and unit test order will be determined by XTO.

Pre-test Activities	**Due Date**
1. Prepare test protocol (Air Hygiene)	>30 days prior to testing
2. Submit notification to Federal and State agencies (Air Hygiene)	≥30 days prior to testing
3. Receive site safety training, if required	day of arrival for setup

On-site Testing Activities (per each individual test lab)	**Time**
Typical Day – Test two or more engines (≥90% rated load)	
• Daily setup and calibrations	07:00 – 08:00
• Conduct JJJJ/ODEQ testing for NOx, CO, VOC, and O_2	08:00 – 12:00
○ Collect data for NOx, CO, VOC, and O_2 (3, 1-hr runs)	
○ Collect data for moisture (3, RM4: 35-min runs or calculation or FTIR: 60-min runs)	
• Move to next engine	12:00 – 13:00
• Conduct JJJJ/ODEQ testing for NOx, CO, VOC, and O_2	13:00 – 17:00
○ Collect data for NOx, CO, VOC, and O_2 (3, 1-hr runs)	
○ Collect data for moisture (3, RM4: 35-min runs or calculation or FTIR: 60-min runs)	
• Repeat until all engines tested	

Activities after Testing	
• Demobilization of Testing Crew (Air Hygiene)	Day 1
• Preparation of draft test report (Air Hygiene)	Days 2 – 9
• Submit for review to XTO (Air Hygiene)	Day 10
• Review and comment on draft (XTO)	Days 11 – 15
• Prepare final hard copy test reports (Air Hygiene)	Days 16 – 19
• Final reports delivered to XTO (Air Hygiene)	Day 20

2.6 Test Report Content

The Test Reports for the engines will meet the requirements of the ODEQ and the EPA for emissions testing. The reports will include discussion of the following:

- Introduction
- Plant and Sampling Location Description
- Summary and Discussion of Test Results Relative to Acceptance Criteria
- Sampling and Analytical Procedures
- QA/QC Activities
- Test Results and Related Calculations
- Stack and Testing Equipment Drawings
- Raw Field Data and Calibration Data Sheets
- Sampling Log and Chain-of-Custody Records
- Audit Data Sheets

2.7 Equipment and Procedures

Test methods and parameters to satisfy 40 Code of Federal Regulations (CFR) Part 60, Part 51, and Part 63 will include:

- 40 CFR 60, App A, EPA Method 1 for sample location
- 40 CFR 60, App A, EPA Method 3a for molecular weight (O_2)
- 40 CFR 60, App A, EPA Method 4 for stack exhaust moisture, if needed
- 40 CFR 60, App A, EPA Method 7e for nitrogen oxides (NOx)
- 40 CFR 60, App A, EPA Method 10 for carbon monoxide (CO)
- 40 CFR 60, App A, EPA Method 18 for gas chromatograph analysis of methane and ethane
- 40 CFR 60, App A, EPA Method 19 for stack exhaust flow, if needed
- 40 CFR 60, App A, EPA Method 25a for total hydrocarbons (THCs)
- 40 CFR 51, App M, EPA Method 205 for sample dilution and analyzer calibration - option

Based on equipment availability and additional test needs, test methods in place of 7e, 10, and/or 18 may also include:

- 40 CFR 63, App A, EPA Method 320 for THC, VOC, NOx, CO, methane, or ethane by FTIR Analyzer

2.8 Proposed Variations

All moisture tests conducted utilizing Method 4, when it is not used per the Section 16.4 FFactor calculation technique, will be approximately 35-minutes in duration, rather than for the duration of the pollutant test run; which at a required flow rate near the maximum of 0.75 dry cubic feet per minute (e.g. ΔH@ of the console) will result in a minimum of 21 dry standard cubic feet of sample, as required by the method. The exception will be all moisture tests conducted utilizing Method 320, which will be approximately 60-minutes in duration, since the moisture and pollutant concentrations are measured by the same analyzer simultaneously. Regardless of method, all moisture tests will be conducted from a single point near the center of the stack, if accessible, or some other point as defined in the report, as moisture in this type of source tends to exist as a homogenous cloud, exhibiting no significant stratification as researched and supported by USEPA ALT-008 and ALT-0060. As needed, an unheated stainless steel hook may be utilized over the top of the stack and back down into the flow to accommodate the availability of sample ports and will be connected to the impinger train with unheated Teflon tubing, assuming that the impinger train is forced to be located at grade level due to test port and/or stack configuration conditions. Condensation that occurs in the probe and tubing combination will drain, via gravity, to the impinger train and will be assisted by field personnel, who will purposely drain the assembly into the impinger train at the conclusion of each test run.

40 CFR 60, Subpart JJJJ testing points will be selected based on the method and regulatory revisions published on February 27, 2014 in the Federal Register, except for cases where sample port access is limited or presents an unsafe condition. In those instances, when they exist, pre-hung stainless steel tubing that is tapped into the stack at a point near the center will be used as test probes.

2.9 Sampling Strategy

Three, 60-minute runs will be performed measuring NOx, CO, VOCs, and O_2 within 10 percent of the rated load. Three exhaust moisture runs will be conducted utilizing Method 4 (calculation or 35-minutes) or a FTIR (60-minutes). All moisture testing, if conducted with manual Method 4, will be conducted from a single point near the center of the stack either via test ports or utilizing a stainless steel hook over the top of the exhaust and back down into the flow if needed to accommodate sample port availability and following the proposed variations in Section 2.8. All NOx, CO, VOCs, and O_2 testing will be conducted from either:

Stack Diameter	Test Point(s) / Location(s)
≤ 6 inches	1 / center
>6 and ≤12 inches	3 / 16.7, 50.0, and 83.3 percent of the diameter
>12 inches	If stack meets the 2 and 0.5 diameter rule, 3 / 16.7, 50.0, and 83.3 percent of the diameter Otherwise, conduct stratification testing per Section 8.1.2 of Method 7E

This testing will be conducted either via test ports or by utilizing multiple stainless steel hooks or a stainless steel rake type probe over the top of the exhaust and back down into the flow if needed to accommodate sample port availability.

During the tests, the following operating data will be recorded at a minimum: engine speed (rpm), output power (hp), fuel flow (scfh), air manifold pressure (psi), air manifold temperature (°F), suction pressure (psi), discharge pressure (psi), engine timing (°BTDC), ambient temperature (°F), ambient pressure (in. Hg), and ambient relative humidity (%), and engine hour reading as available. XTO personnel will provide an appropriate fuel gas analysis for each facility.

Depending on available equipment and also additional testing needs VOC emission concentrations will be quantified in accordance with one of two options, or their equivalents:

Option 1:
VOC emission concentrations will be quantified in accordance with principles set forth in EPA Method 18. A VIG 210 will be used for this purpose. The VIG 210 includes both a conventional total hydrocarbon (THC) analyzer and an automated gas chromatograph (GC) for determining VOCs. Two FIDs (flame ionization detectors) are used for the measurements: one for the THC channel and the other for the automated GC which can measure methane, ethane, and residual (VOCs). The THC sample is injected directly to the FID. This detector responds to all hydrocarbons in the sample.

For VOC sampling, a heated gas sampling valve is used for direct injection of the gas on the GC column per Method 18, Section 8.2.2. The GC column separates hydrocarbon components based on their molecular configurations, weights, and boiling points. In this application, the analyzer uses the gas chromatograph column to separate methane and ethane from the heavier residual hydrocarbons (i.e. VOCs). Methane elutes from the sample first, it is immediately detected by the FID; ethane elutes from the column second and is detected. The flow in the column is reversed (back-flushed) and the residual components are recombined and detected by the FID as residual VOCs. The sample time of the VOC is approximately four minutes, so each 60 minute test run corresponds to approximately 14 sample injections.

EPA Method 7e bias and drift check criterion will be used to validate data instead of EPA Method 18 recovery studies as it is has more stringent and comprehensive quality assurance procedures. National Institute of Science and Technology (NIST) traceable propane calibration gas will be used to calibrate the VOC and the calibration procedure following EPA Method 25a. In this application, the target analyte is VOC (non methane, non ethane hydrocarbon); therefore, the methane and ethane concentrations will not be formally calibrated.

Option 2:

An MKS Instruments - MultiGas™ Fourier transform infrared (FTIR) spectrometer, or equivalent, is one option for THC, VOC, methane, and ethane analysis per EPA Method 320. This analyzer may also be used for NOx and CO analysis per the same methodology. The FTIR spectrometer spectral resolution is 0.5 cm-1. The system employs a silicon carbide infrared source at 1200 °C, a helium neon reference laser, beam splitters, and potassium bromide (KBr) cell window, front-surface optical transfer mirrors, and multi-pass absorption cells. MCT detectors will be used and cooled with liquid nitrogen in order to maintain a constant temperature of 77 Kelvin. The ~5.11-meter multi-pass path cells incorporate aspheric, aberration-correcting mirrors to increase the optical throughput and the detection sensitivity. Transducers and thermocouples are connected directly to the insulated sample cells that provide the pressure and temperatures of the sample streams. During testing, the temperature of the absorption cells will be set at 191 °C. Elevated temperature prevents gas condensation within the cell and minimizes analyte adhesion to the cell walls and mirrors. The volume of the absorption cell is 0.5 liters, so at a sample gas flow rate of 4.0 liters per minute, the sample gas in the cell is refreshed approximately eight times each minute. Interferograms consisting of 28 co-added scans will be recorded continuously during the test periods, and will provide approximately 30-second average concentrations. The VOCs will be reported on a propane equivalent basis as required in the Federal Register.

APPENDIX A

QA/QC PROGRAM

QA/QC PROGRAM

AIR HYGIENE ensures the quality and validity of its emission measurement and reporting procedures through a rigorous quality assurance (QA) program. The program is developed and administered by an internal QA team and encompasses five major areas:

1. QA reviews of reports, laboratory work, and field testing;
2. Equipment calibration and maintenance;
3. Chain-of-custody;
4. Training; and
5. Knowledge of current test methods.

QA Reviews

AIR HYGIENE's review procedure includes a review of each source test report, along with laboratory and fieldwork by the QA Team.

The most important review is the one that takes place before a test program begins. The QA Team works closely with technical division personnel to prepare and review test protocols. Test protocol review includes selection of appropriate test procedures, evaluation of interferences or other restrictions that might preclude use of standard test procedures, and evaluation and/or development of alternate procedures.

Equipment Calibration and Maintenance

The equipment used to conduct the emission measurements is maintained according to the manufacturer's instructions to ensure proper operation. In addition to the maintenance program, calibrations are carried out on each measurement device according to the schedule outlined by the Environmental Protection Agency. Quality control checks are also conducted in the field for each test program.

Chain-of-Custody

AIR HYGIENE maintains full chain-of-custody documentation on all samples and data sheets. In addition to normal documentation of changes between field sample custodians, laboratory personnel, and field test personnel, AIR HYGIENE documents every individual who handles any test component in the field (e.g., probe wash, impinger loading and recovery, filter loading and recovery, etc.). Samples are stored in a locked area to which only AIR HYGIENE personnel have access. Field data sheets are secured at AIR HYGIENE's offices upon return from the field.

Training

Personnel training is essential to ensure quality testing. AIR HYGIENE has formal and informal training programs, which include:

1. Attendance at EPA-sponsored training courses;
2. Enrollment in EPA correspondence courses;
3. A requirement for all technicians to read and understand Air Hygiene Incorporated's QA manual;
4. In-house training and QA meetings on a regular basis; and
5. Maintenance of training records.

Knowledge of Current Test Methods

With the constant updating of standard test methods and the wide variety of emerging test procedures, it is essential that any qualified source tester keep abreast of new developments. AIR HYGIENE subscribes to services, which provide updates on EPA reference methods, rules, and regulations. Additionally, source test personnel regularly attend and present papers at testing and emission-related seminars and conferences.

COMBUSTION TESTING QUALITY ASSURANCE ACTIVITIES

A number of quality assurance activities are undertaken before, during, and after each testing project. The following paragraphs detail the quality control techniques, which are rigorously followed during testing projects.

Each instrument's response is checked and adjusted in the field prior to the collection of data via multi-point calibration. The instrument's linearity is checked by first adjusting its zero and span responses to zero nitrogen and an upscale calibration gas in the range of the expected concentrations. The instrument response is then challenged with other calibration gases of known concentration and accepted as being linear if the response of the other calibration gases agreed within plus or minus 2 percent of range of the predicted values.

After each test run, the analyzers are checked for zero and span drift. This allowed each test run to be bracketed by calibrations and documents the precision of the data just collected. The criteria for acceptable data are that the instrument drift is no more than 3 percent of the full-scale response. Quality assurance worksheets are prepared to document the multipoint calibration checks and zero to span checks performed during the tests.

The sampling systems are leak checked by demonstrating that a vacuum greater than 10 in Hg could be held for at least 1 minute with a decline of less than 1 in. Hg. A leak test is conducted after the sample system is set up and before the system is dismantled. This test was conducted to ensure that ambient air had not diluted the sample. Any leakage detected prior to the tests would be repaired and another leak check conducted before testing commenced.

The absence of leaks in the sampling system is also verified by a sampling system bias check. The sampling system's integrity is tested by comparing the responses of the analyzers to the calibration gases introduced via two paths. The first path was directly into the analyzer and the second path via the sample system at the sample probe. Any difference in the instrument responses by these two methods is attributed to sampling system bias or leakage. The criteria for acceptance are agreement within 5 percent of the span of the analyzer.

The control gases used to calibrate the instruments are analyzed and certified by the compressed gas vendors to ± 1% accuracy for all gases. EPA Protocol No. 1 was used where applicable to assign the concentration values traceable to the National Institute of Standards and Technology (NIST), Standard Reference Materials.

AIR HYGIENE maintains a large variety of calibration gases to allow the flexibility to accurately test emissions over a wide range of concentrations.

APPENDIX B

TEST EQUIPMENT CONFIGURATION AND DESCRIPTION

INSTRUMENT CONFIGURATION AND OPERATIONS FOR GAS ANALYSIS

These sampling and analysis procedures conform in principle with the methods outlined in the Code of Federal Regulations, Title 40, Part 60, Appendix A, Methods 1, 3a, 4, 7e, 10, 18, 19 and 25a; 40 CFR 51, Appendix M, Method 205; and/or 40 CFR 63, Appendix A, Method 320.

The sample system to be used for the NOx, CO, VOC, and O_2 tests is configured per the following description. A stainless steel probe will be inserted near the center of the stack. The gas sample will be continuously pulled through the probe and transported via 3/8 inch heat-traced Teflon® tubing to a stainless steel, minimum-contact condenser designed to dry the sample and then through Teflon® tubing via a stainless steel/Teflon® diaphragm pump and into the sample manifold within the mobile laboratory. From the manifold, the sample is partitioned to the NOx, CO, and O_2 analyzer through rotameters that control the flow rate of the sample. VOC samples are routed to the analyzer prior to gas conditioning.

The schematic (Figure 1) shows that the sample system is also equipped with a separate path through which a calibration gas could be delivered to the probe and back through the entire sampling system. This allows for convenient performance of system bias checks as required by the testing methods.

All instruments are housed in an air-conditioned, trailer-mounted mobile laboratory. Gaseous calibration standards are provided in aluminum cylinders with the concentrations certified by the vendor according to EPA Protocol No. 1.

This general schematic also illustrates the analyzers to be used for the tests (i.e., O_2, CO). All data from the Reference Method continuous monitoring instruments are recorded on a Logic Beach Hyperlogger. The Hyperlogger retrieves calibrated emissions data from each instrument every second. An average value is recorded every 30 seconds.

The stack gas analysis for O_2 concentrations will be performed in accordance with procedures set forth in EPA Method 3a. The O_2 analyzer uses a paramagnetic cell detector.

EPA Method 7e will be used to determine concentrations of NOx. A chemiluminescence analyzer will be used to provide the analysis. A NO_2 in nitrogen certified gas cylinder will be used to verify at least a 90 percent NO_2 conversion on the day of the test. Method 320, utilizing an FTIR may also be used for the analysis.

CO emission concentrations will be quantified in accordance with procedures set forth in USEPA Method 10 or 320. A continuous nondispersive infrared (NDIR) analyzer will be used for this purpose. Method 320, utilizing an FTIR may also be used for the analysis.

VOC emission concentrations will be quantified in accordance with principles set forth in USEPA Method 18. A VIG 210 will be used for this purpose. The VIG 210 includes both a conventional total hydrocarbon (THC) analyzer and an automated gas chromatograph (GC) for determining VOCs. Two FIDs (flame ionization detectors) are used for the measurements: one for the THC channel and the other for the automated GC which can measure methane, ethane, and residual (VOCs). The THC sample is injected directly to the FID. This detector responds to all hydrocarbons in the sample. Method 320, utilizing an FTIR may also be used for the analysis of methane and ethane.

COPYRIGHT © 2011 AIR HYGIENE INTERNATIONAL, INC.

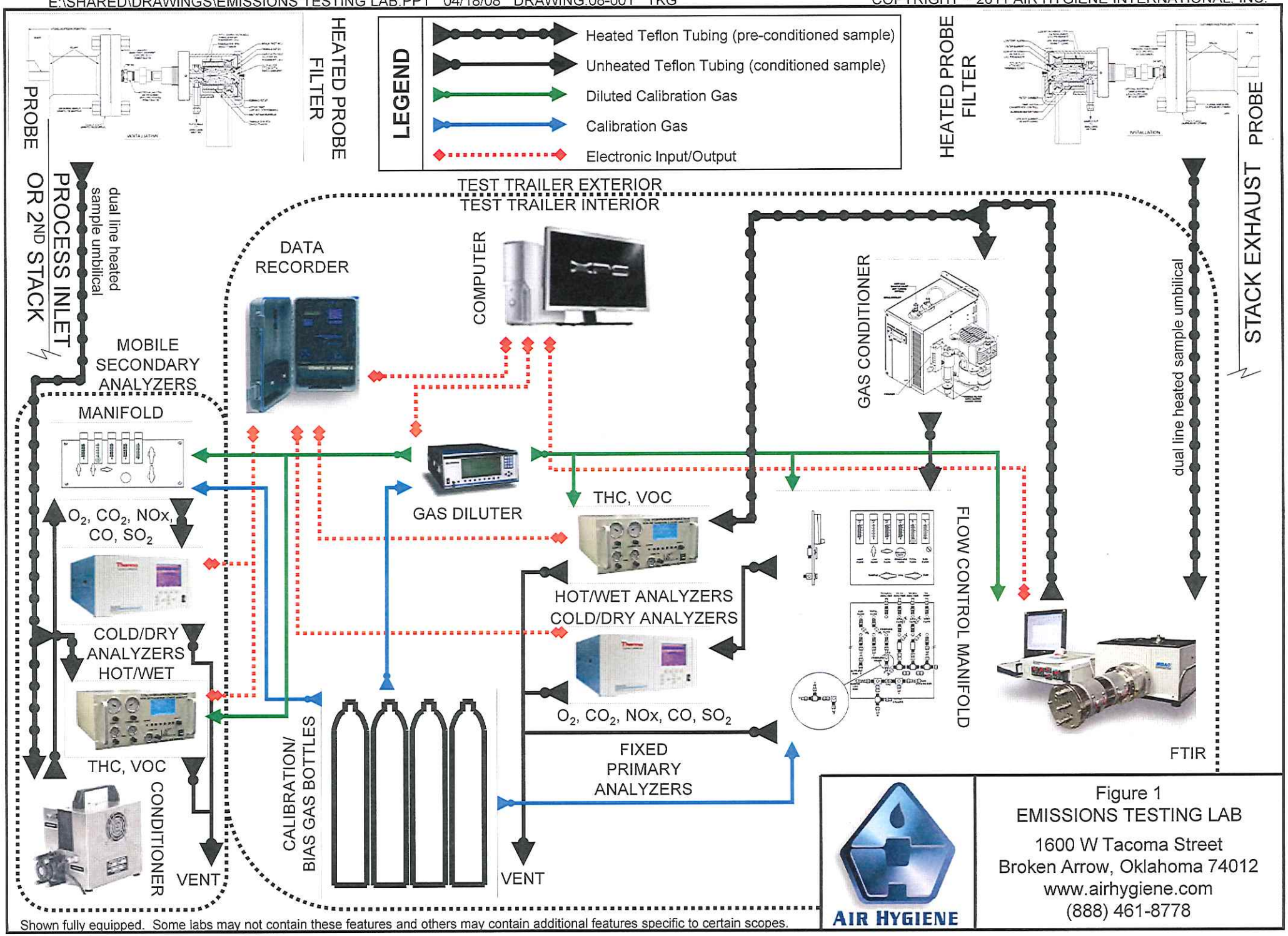

Figure 1
EMISSIONS TESTING LAB

1600 W Tacoma Street
Broken Arrow, Oklahoma 74012
www.airhygiene.com
(888) 461-8778

Shown fully equipped. Some labs may not contain these features and others may contain additional features specific to certain scopes.

TABLE 1: TESTING MATRIX

Target	EPA Test Method	Unit Test Load(s)	Test Length
O_2	3a	≥ 90% of rated load	3 x 60-minute test runs
Moisture	4 or 320	≥ 90% of rated load	3 x 35 (60)-minute test runs or calculation equivalent
NOx	7e or 320	≥ 90% of rated load	3 x 60-minute test runs
CO	10 or 320	≥ 90% of rated load	3 x 60-minute test runs
VOC	18 or 320 / 25a	≥ 90% of rated load	3 x 60-minute test runs

TABLE 2: ANALYTICAL INSTRUMENTATION

Parameter	Model and Manufacturer	Common Use Ranges	Sensitivity	Detection Principle
O_2	Servomex or equivalent	0-25%	0.1%	Oxygen - Paramagnetic cell
NOx	TECO 42C or equivalent	0-10,000 ppm	0.1 ppm	Thermal reduction of NO_2 to NO. Chemiluminescence of reaction of NO with O_3. Detection by PMT. Inherently linear for listed ranges.
CO	TECO 48C or equivalent	0-10,000 ppm	0.1 ppm	Infrared absorption, gas filter correlation detector, microprocessor based linearization.
VOC	VIG 210	User may select up to 3,000 ppm	0.1 ppm	Gas Chromatography and Flame Ionization Detector
NOx, CO, Methane, Ethane, H_2O, etc.	MKS Multigas 2030, or equivalent	User may select from multiple ranges	0.01 ppm	Fourier Transform Infrared Spectroscopy

TABLE 3: ANALYTICAL INSTRUMENTATION TESTING CONFIGURATION

Parameter	Sample Methodology	Example Range	Sensitivity	Calibration Gases (based on example range)
O_2	3a	0-21%	0.1%	Zero = 0 ppm nitrogen Mid = 8.4 – 12.6% High = 21%
NOx	7e or 320	0-1000 ppm	0.1 ppm	Zero = 0 ppm nitrogen Mid = 400 – 600 ppm High = 1000 ppm
CO	10 or 320	0-1000 ppm	0.1 ppm	Zero = 0 ppm nitrogen Mid = 400 – 600 ppm High = 1000 ppm
THC/VOC (as propane)	18 or 320	0-100 ppm	0.1 ppm	Zero = 0 ppm nitrogen Low = 25 – 35 ppm Mid = 45 – 55 ppm High = 80 – 90 ppm
NOx, CO, Methane, Ethane, H_2O, etc.	320	0-100 ppm	0.01 ppm	Example Spike gas – Ethane 100 ppm

APPENDIX C

STACK DRAWINGS AND SITE SPECIFICATIONS

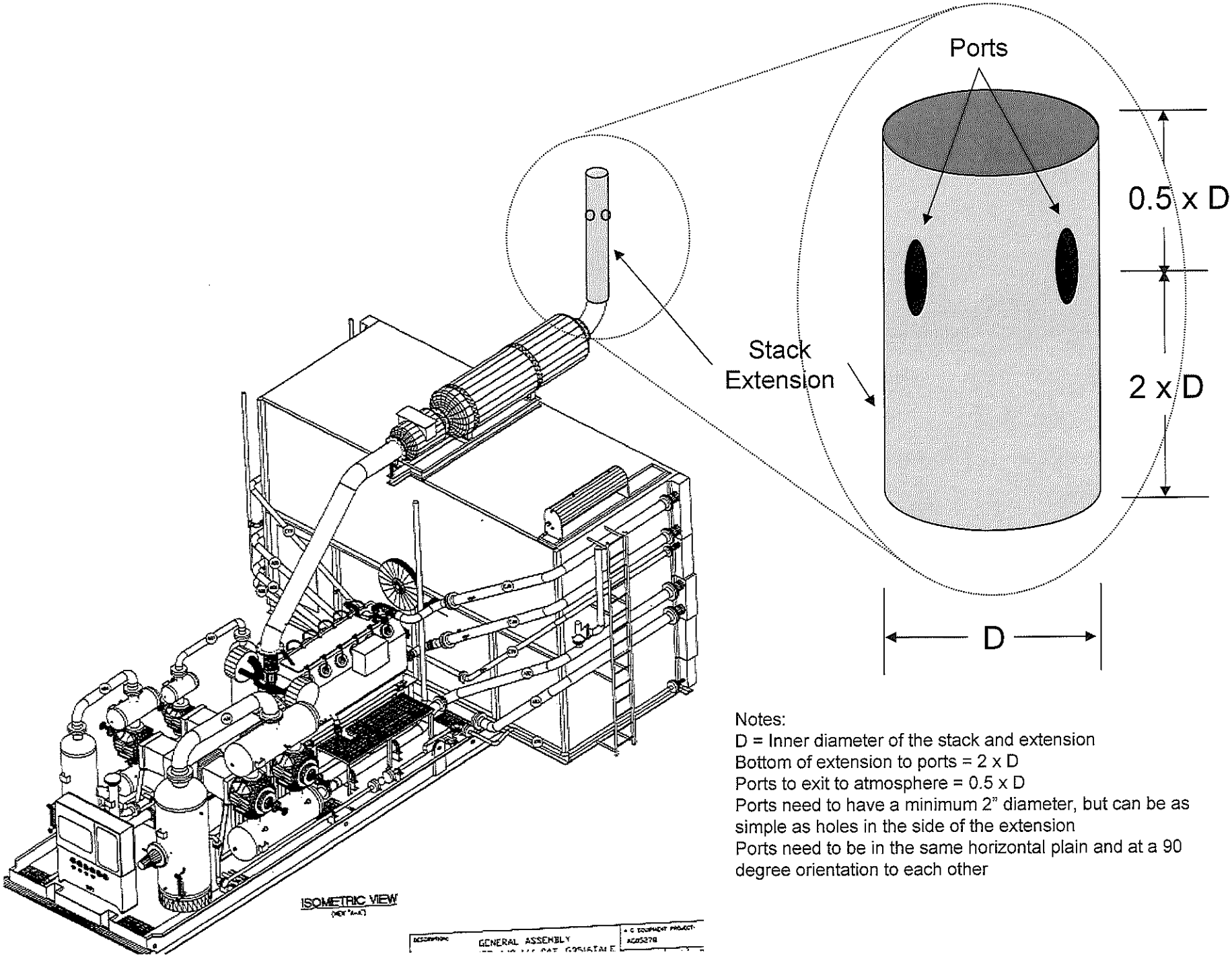

Notes:
D = Inner diameter of the stack and extension
Bottom of extension to ports = 2 x D
Ports to exit to atmosphere = 0.5 x D
Ports need to have a minimum 2" diameter, but can be as simple as holes in the side of the extension
Ports need to be in the same horizontal plain and at a 90 degree orientation to each other

APPENDIX D

EXAMPLE TEMPLATES AND CALCULATIONS

ENGINE TEST - FIELD DATA SHEET

AIR HYGIENE

Company:	
Location:	
Date:	
Unit Make and Model:	
Unit Number:	
Serial Number:	
Data Recorded By:	
Tested With AHI Unit(s):	Truck(s): Trailer(s):
LDEQ Warmup/Cal Req:	On (Day/Time): Cal (Day/Time):

CYLINDER SERIAL NUMBERS		O_2	NOx	CO	THC	CO_2	SO_2
	Low						
	Mid						
	High						

NO_2 CONVERSION	
NO_2 Gas (ppm)	
NO Reading (ppm)	
NOx Reading (ppm)	
Cylinder Num	

Stack Dia. = _____
Measured By: _____
Measured With: _____

RUN INFORMATION	Run #1	Run #2	Run #3	Run #4	Average
Time Start (hh:mm:ss)					
Time Stop (hh:mm:ss)					
Barometric Pressure (in. Hg)					
Ambient Temperature (°F)					
Relative Humidity (%)					
Suction Pressure (psig)					
Discharge Pressure (psig)					
Rated Horsepower (hp)					
Actual Horsepower (hp)					
Fuel Flow (SCF/hr)					
Turbo Speed (npt) or (rpm)					
Engine Speed (npg) or (rpm)					
Air Manifold Temperature (°F)					
Air Manifold Pressure (psig or in. Hg)					
Engine Timing BTDC					

REPORT INFORMATION	INSTRUMENT	SERIAL #
O_2		
NOx		
CO		
THC		
CO_2		
SO_2		

RESPONSE TIME	TIME (hh:mm)	RESP (min)
Gas Inject	/ /	
1st Inst. @ 95%	/ /	/ /
2nd Inst. @ 95%	/ /	/ /
3rd Inst. @ 95%	/ /	/ /

CALIBRATION	O_2		NOx		CO		THC		CO_2	
	Conc.	Actual	Conc.	Actual	Conc.	Actual	Conc.	Actual	Conc.	Actual
Zero Gas										
Low Gas										
Mid Gas										
High Gas										

BIAS	O_2		NOx		CO		THC		CO_2	
	Zero	Mid	Zero	Mid	Zero	Mid	Zero	Mid	Zero	Mid
Initial/Run #1										
Run #1/Run #2										
Run #2/Run #3										
Run #3/Run #4										
Run #4/Final										

Bias Gas Actual Conc. _____ _____ _____ _____ _____

Air Permit # :	
Plant Name or Location:	
Date:	
Project Number:	
Manufacturer & Equipment:	
Model:	
Serial Number:	
Unit Number:	
Test Load:	
Tester(s) / Test Unit(s):	

		RUN																	
	UNITS	1	2	3	4	5	6	7	8	9	10	11	12	13	14	15	16	17	18
Start Time	hh:mm:ss																		
End Time	hh:mm:ss																		
Bar. Pressure	in. Hg																		
Amb. Temp.	°F																		
Rel. Humidity	%																		
Spec. Humidity	lb water / lb air																		
Comb. Inlet Pres.	psig																		
NOx Water Inj.	gpm																		
Total Fuel Flow	SCFH																		
Heat Input	MMBtu/hr																		
Power Output	megawatts																		
Steam Rate	lb/hr																		

Client:
Location:
Date:
Project #:

Natural Gas - Fuel Analysis

Standardized to 68 deg F and 14.696 psia - EPA Standards

Gas Component		Mole (%)	Molecular[1] Weight (lb/lb-mole)	Lbs Component per Lb-Mole of Gas	Wt. % of Component	Ideal Gross[1,3] Heating Value (Btu/ft^3)	Fuel Heat Value [HHV] (Btu/SCF)	Ideal Net[1,3] Heating Value (Btu/ft^3)	Fuel Heat Value [LHV] (Btu/SCF)
Methane	CH_4								
Ethane	C_2H_6								
Propane	C_3H_8								
iso-Butane	iC_4H_{10}								
n-Butane	nC_4H_{10}								
Iso-Pentane	iC_5H_{12}								
n-Pentane	nC_5H_{12}								
Hexanes	C_6H_{14}								
Heptanes	C_7H_{16}								
Octanes	C_8H_{18}								
Carbon Dioxide	CO_2								
Nitrogen	N_2								
Hydrogen Sulfide	H_2S								
Oxygen	O_2								
Helium	He								
Hydrogen	H_2								
Totals						dry		dry	
						wet[2,5]		wet[2,5]	

Characteristics of Fuel Gas		
Molecular Weight of gas =		lb/lb-mole
Btu per lb. of gas[4] =		gross (HHV)
Btu per lb. of gas[4] =		net (LHV)
Density of fuel gas[2] =		lb/cu. ft
Wt % VOC in fuel gas =		%
Specific Gravity[1] =		

Component	Wt%
carbon	
oxygen	
hydrogen	
nitrogen	
helium	
sulfur	
Total	

F-Factor (SCF dry exhaust per MMBtu [HHV]) =
(Based on EPA RM-19) at 68 deg F and 14.696 psia

F-Factor Calculation:

F-Factor = 1,000,000*((3.64*%H)+(1.53*%C)+(0.57*%S)+(0.14*%N)-(0.46*%O))/GCV

GCV = Gross Btu per lb. of gas (HHV)

%H, %C, %S, %N, & %O are percent weight values calculated from fuel analysis and have units of (scf/lb)/%

Density of natural gas based on specific gravity multiplied by density of air at 68 deg F and 14.696 psia.

References:

[1] ASTM D 3588
[2] Civil Engineering Reference Manual, 7th ed. - Michael R. Lindeburg
[3] Mark's Standard Handbook for Mechanical Engineers, 10th ed. - Eugene A. Avallone, Theodore Baumeister III
[4] Introduction to Fluid Mechanics, 3rd ed. - William S. Janna
[5] GPA Reference Bulletin 181-86, revised 1986, reprinted 1995

Calibration Date:
Client:

NOx Span (ppm) =

THERMO 42H (NOx Analyzer)				
Certified Concentration (ppm)	Instrument Response (ppm)	Calibration Error (%)	Absolute Conc. (ppm)	Pass or Fail (±2%, ≤0.5ppm)
Linearity =				

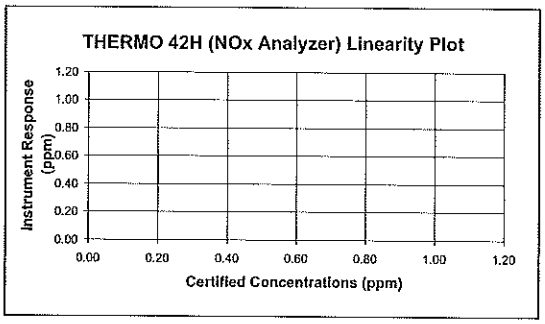

CO Span (ppm) =

API 300 (CO Analyzer)				
Certified Concentration (ppm)	Instrument Response (ppm)	Calibration Error (%)	Absolute Conc. (ppm)	Pass or Fail (±2%, ≤0.5ppm)
Linearity =				

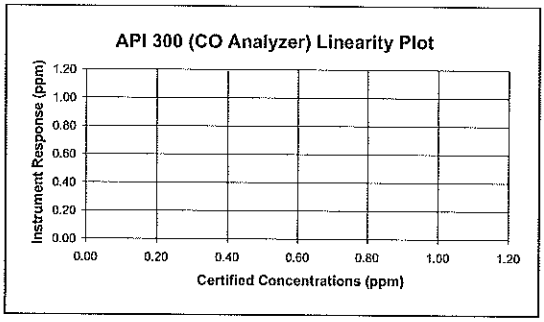

O2 Span (%) =

SERVOMEX 1400 (O_2 Analyzer)				
Certified Concentration (ppm)	Instrument Response (ppm)	Calibration Error (%)	Absolute Conc. (ppm)	Pass or Fail (±2%, ≤0.5%)
Linearity =				

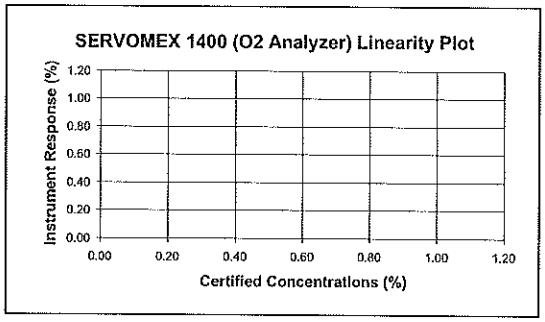

THC Range (ppm) =

THERMO 51 (THC Analyzer)				
Certified Concentration (ppm)	Instrument Response (ppm)	Calibration Error (%)	Estimated Point (ppm)	Pass or Fail (±2,5%)[1]
Linearity =				

[1]-zero/high based on 2% of span,low/mid based on 5% of concentration

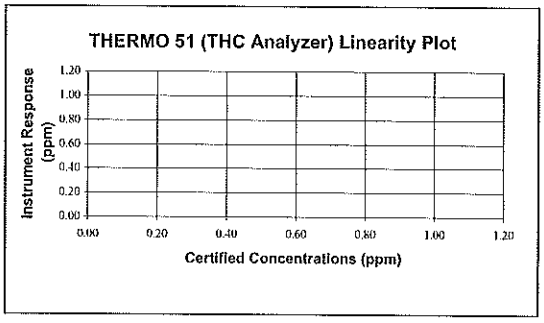

CO2 Span (%) =

FUJI 3300 (CO_2 Analyzer)				
Certified Concentration (ppm)	Instrument Response (ppm)	Calibration Error (%)	Absolute Conc. (ppm)	Pass or Fail (±2%, ≤0.5%)
Linearity =				

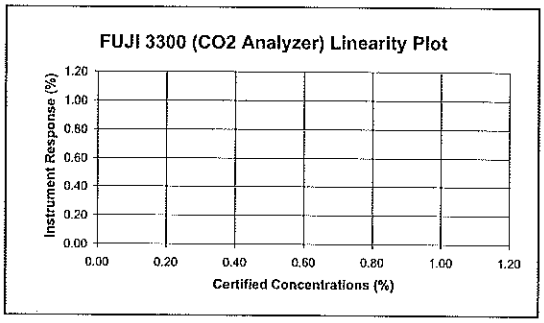

NOx Converter Efficiency

Date:

Analyzer:

RM 7E, (08-15-06), 8.2.4.1 Introduce a concentration of 40 to 60 ppmv NO_2 to the analyzer in direct calibration mode and record the NOx concentration displayed by the analyzer. ... Calculate the converter efficiency using Equation 7E-7 in Section 12.7. The specification for converter efficiency in Section 13.5 must be met. ... The NO_2 must be prepared according to the EPA Traceability Protocol and have an accuracy within 2.0 percent.

Audit Gas: NO_2 Concentration (C_v), ppmvd

Converter Efficiency Calculations:

Analyzer Reading, NO Channel, ppmvd

Analyzer Reading, NOx Channel, ppmvd

Analyzer Reading, NO_2 Channel ($C_{Dir(NO2)}$), ppmvd

Converter Efficiency, %

RM 7E, (08-15-06), 13.5 NO2 to NO Conversion Efficiency Test (as applicable). The NO2 to NO conversion efficiency, calculated according to Equation 7E-7 or Equation 7E-9, must be greater than or equal to 90 percent.

$$Eff_{NO2} = \left(\frac{C_{Dir}}{C_V}\right) \times 100$$

Eq. 7E-7 = ppmvd / ppmvd x 100 =

Date/Time	Elapsed Time	NOx	NO
mm/dd/yy hh:mm:ss	Seconds	ppmvd	ppmvd

Fuel Data

Fuel F_d factor		SCF/MMBtu
Fuel Heating Value (HHV)		Btu/SCF

Weather Data

Barometric Pressure		in. Hg
Relative Humidity		%
Ambient Temperature		°F
Specific Humidity		lb H_2O / lb air

Unit Data

Unit Load		megawatts
Heat Input		lb/MMBtu
Steam Rate		Steam lb/hr
Combustor Inlet Pres.		psig
NOx Control Water Injection		gpm
Est. Stack Moisture		%
Stack Exhaust Flow (M2)		SCFH
Stack Exhaust Flow (M19)		SCFH

Run - 1

Date/Time (mm/dd/yy hh:mm:ss)	Elapsed Time (seconds)	O_2 (%)	NOx (ppmvd)	CO (ppmvd)

RAW AVERAGE

		O_2 (%)	NOx (ppmvd)	CO (ppmvd)
	Serial Number:			
Bias	Initial Zero			
	Final Zero			
	Avg. Zero			
	Initial UpScale			
	Final UpScale			
	Avg. UpScale			

Upscale Cal Gas

EMISSIONS DATA	O_2	NOx	CO
Corrected Raw Average (ppm/% dry basis)			
Corrected Raw Average (ppm/% wet basis)			
Concentration (ppm@ $\%O_2$)			
Concentration (ppm@ $\%O_2$ &ISO)			
Emission Rate (lb/hr)			
Emission Rate (tons/day) at 24 hr/day			
Emission Rate (tons/year) at 8760 hr/yr			
Emission Rate (lb/MMBtu)			
Emission Rate (g/hp*hr)			

DRIFT AND BIAS CHECK			
Run - 1	O2	NOx	CO
Raw Average			
Corrected Average			
Initial Zero			
Final Zero			
Avg. Zero			
Initial UpScale			
Final UpScale			
Avg. UpScale			
Sys Resp (Zero)			
Sys Resp (Upscale)			
Upscale Cal Gas			
Initial Zero Bias			
Final Zero Bias			
Zero Drift			
Initial Upscale Bias			
Final Upscale Bias			
Upscale Drift			
Alternative Specification Abs Diff: Initial Zero			
Final Zero			
Initial Upscale			
Final Upscale			
Calibration Span			
3% of Range (drift)			
5% of Range (bias)			

DRIFT AND BIAS CHECK			
Run - 2	O2	NOx	CO
Raw Average			
Corrected Average			
Initial Zero			
Final Zero			
Avg. Zero			
Initial UpScale			
Final UpScale			
Avg. UpScale			
Sys Resp (Zero)			
Sys Resp (Upscale)			
Upscale Cal Gas			
Initial Zero Bias			
Final Zero Bias			
Zero Drift			
Initial Upscale Bias			
Final Upscale Bias			
Upscale Drift			
Alternative Specification Abs Diff: Initial Zero			
Final Zero			
Initial Upscale			
Final Upscale			
Calibration Span			
3% of Range (drift)			
5% of Range (bias)			

EMISSION CALCULATIONS SUMMARY TABLES

Company: **Date:**
Engine Tested: **Location:**
Engine Serial #:

Stack Gas Flow Rate: Method 19

Test #	Brake Horsepower	O_2 Conc. (%)	Fuel Heating Value (Btu/SCF)	F Factor-Dry Oxy. (DSCFex/MMBtu)	Fuel Flow (SCF/hr)	Stack Flow (SCF/hr)
1						
2						
3						
Average						

NOx Mass Emission Rate

Test #	Brake Horsepower	NOx Conc. (ppmvd)	MW	E (g/hp*hr)	E (lb/hr)	E (ton/yr)	E (lb/MMBtu)
1			46.01				
2			46.01				
3			46.01				
Average			**46.01**				

CO Mass Emission Rate

Test #	Brake Horsepower	CO Conc. (ppmvd)	MW	E (g/hp*hr)	E (lb/hr)	E (ton/yr)	E (lb/MMBtu)
1			28.00				
2			28.00				
3			28.00				
Average			**28.00**				

Fuel Flow (Btu/hp•hr) is based upon the worst case assumption of 8,500 Btu/hp•hr fuel usage when site data for fuel flow is not available.

TABLE 2.1: ENGINE EMISSIONS REPORT

Test Period:				Air Permit Number:	
Location:				Unit Number:	
Date:				Suction Pressure (psi):	
Project Number:				Discharge Pressure (psi):	
Engine Manufacturer:				Stack Exhaust Temperature (°F):	
Engine Model:				Rated Horsepower (hp):	
Engine Serial Number:				Brake Horsepower (bhp):	
Analyzer Manufacturers:	TECO(NOx), API(CO), TECO(THC)			Engine Fuel Flow (SCFH):	
Analyzer Model Numbers:	42H, 300, 51			Specific Gravity:	
Date Analyzers Calibrated:				Fuel Heating Value [HHV] (Btu/SCF):	
Emission Test Results:	Appendix A			BSFC (Btu/hp*hr):	
Analyzer Data Plots:	Appendix B			Annual Hours Allowed to Operate:	8,760
Cal Gas Spec. Sheets:	Appendix C			Engine Speed (rpm):	
Quality Control Data Sheets:	Appendix D			Air Manifold Temp (°F):	
Chromatograph Report:	Appendix E			Air Manifold Pressure (psi):	
Ambient Temperature (°F):				Turbo Speed (rpm):	
Barometric Pressure (in. Hg):				Engine Ignition Timing (°BTDC):	
Relative Humidity (%):				Load Step:	
				Torque (%):	
				Tested By: Air Hygiene International, Inc.	

Emission Test Results			
Pollutant (units)	Stack Test Results	Permit Limits	Passing
NOx (avg. ppmvd)			
CO (avg. ppmvd)			
VOC (avg. ppmvd)			
NOx @15%O_2 O_2 (avg. ppmvd)			
CO @15%O_2 O_2 (avg. ppmvd)			
VOC @15%O_2 O_2 (avg. ppmvd)			
NOx (avg. lb/hr)			
CO (avg. lb/hr)			
VOC (avg. lb/hr)			
NOx (avg. g/hp*hr)			
CO (avg. g/hp*hr)			
VOC (avg. g/hp*hr)			

All testing conducted according to United States Environmental Protection Agency (EPA), Methods: 7e, 10 and 25a.

EXAMPLE CALCULATIONS (FFACTOR)

RM 19, (07-19-06), 2.0 Summary of Method, 2.1 Emission Rates. Oxygen (O_2) or carbon dioxide (CO_2) concentrations and appropriate F factors (ratios of combustion gas volumes to heat inputs) are used to calculate pollutant emission rates from pollutant co

RM 19, (07-19-06), 12.2 Emission Rates of PM, SO2, and NOx. Select from the following sections the applicable procedure to compute the PM, SO2, or NOx emission rate (E) in lb/MMBtu. The pollutant concentration must be in lb/scf and the F factor must be in scf/MMBtu. If the pollutant concentration (C) is not in the appropriate units, use Table 19–1 in Section 17.0 to make the proper conversion. An F factor is the ratio of the gas volume of the products of combustion to the heat content of the fuel. The dry F factor (F_d) includes all components of combustion less water, the wet F factor (F_w) includes all components of combustion, and the carbon F factor (F_c) includes only carbon dioxide.

Mark's Std Hdbk, 10th ed.,pg 4-26
High Heat Value Dry (HHV_{dry}), calc for Methane (single component for the fuel gas)

$$HHV_{dry}(Btu/SCF) = \left[\left(\frac{M_{\%}}{100}\right) \times GCM\right]$$

HHV_{dry} = ____ % / 100.00 x ____ Btu / SCF = ____ Btu / SCF

Mark's Std Hdbk, 10th ed., pg 4-26
Low Heat Value Dry (LHV_{dry}), calc for Methane (single component for the fuel gas)

$$LHV_{dry}(Btu/SCF) = \left[\left(\frac{M_{\%}}{100}\right) \times NCM\right]$$

LHV_{dry} = ____ % / 100.00 x ____ Btu / SCF = ____ Btu / SCF

Civil Eng. Ref. Man.,7th Ed.,pg 14-9/GPA Ref. Bulletin 181-86, App. C
High Heat Value Wet (HHV_{wet}), calc for entire sample (all components of the fuel gas)

$$HHV_{wet}(Btu/SCF) = \frac{HHV_{dry}}{W/D.factor}$$

HHV_{wet} = ____ Btu/SCF = ____ Btu/SCF

Civil Eng. Ref. Man.,7th Ed.,pg 14-9/GPA Ref. Bulletin 181-86, App. C
Low Heat Value Wet (LHV_{wet}), calc for entire sample (all components of the fuel gas)

$$LHV_{wet}(Btu/SCF) = \frac{LHV_{dry}}{W/D.factor}$$

LHV_{wet} = ____ Btu/SCF = ____ Btu/SCF

Lbs Component per Lb-Mol of Gas (CM), calc for Methane (single component for the fuel gas)

$$CM(lb/lb-mol) = \left[\left(\frac{M_{\%}}{100}\right) \times MW\right]$$

CM = ____ % / 100.00 x ____ lb / lb-mol = ____ lb/lb-mol

ASTM D 3588
Fuel Molecular Weight (MW_{Fuel})

$$MW_{Fuel}(lb/lb \cdot mol) = \left[\sum(CM)\right]$$

MW_{Fuel} = ____ lb/lb-mol
+ ____ lb/lb-mol
+ etc. = ____ lb/lb-mol

Btu per Lb of Gas Gross (**GCV**)

$$GCV(Btu/lb) = \left[\frac{HHV_{dry} \times G}{MW_{Fuel}}\right]$$

GCV = ____ Btu/SCF x ____ ft^3/lbmol / lb/lb-mol = ____ Btu/lb

ASTM D 3588 (SG)
Specific Gravity

$$SG = \left[\frac{MW_{Fuel}}{MW_{AIR}}\right]$$

SG = ____ lb/lb-mol / 28.96 lb/lb-mol =

Btu per Lb of Gas Net (**NCV**)

$$NCV(Btu/lb) = \left[\frac{LHV_{dry} \times G}{MW_{Fuel}}\right]$$

NCV = ____ Btu/SCF x ____ ft^3/lbmol / lb/lb-mol = ____ Btu/lb

Weight Percent of Component ($C_{\%}$), methane

$$C_{\%}(\%) = \left[\left(\frac{CM}{MW_{Fuel}}\right) \times 100\right]$$

$C_{\%}$ = ____ lb/lb-mol / lb/lb-mol x 100 = ____ %

RM 19, (07-19-06), **Weight Percent of Volatile Organic Compounds** ($VOC_{\%}$)

$$VOC_{\%}(\%) = \left[\sum_{C_3H_8}^{C_8H_{18}} M_{\%}\right]$$

$VOC_{\%}$ = ____ % + ____ % + ____ % + etc. = ____ %

RM 19, (07-19-06), 12.3.2 Determined **F Factors.** If the fuel burned is not listed in Table 19–2 or if the owner or operator chooses to determine an F factor rather than use the values in Table 19–2, use the procedure below: 12.3.2.1 Equations. Use the eq

RM 19, (07-19-6), 12.1 Nomenclature

K (scf/lb)/%

H	3.64
C	1.53
S	0.57
N_2	0.14
O_2	0.46

$$F_d = \frac{K(K_{hd}\%H + K_c\%C + K_s\%S + K_n\%N - K_o\%O)}{GCV} \quad \text{Eq. 19-13}$$

F_d = ____ 10^6Btu / MMBtu x [____ 3.64 SCF / lb · % x ____ % + ____ 1.53 SCF / lb · % x ____ % + ____ 0.57 SCF / lb · % x ____ % + ____ 0.14 SCF / lb · % x ____ % - ____ 0.46 SCF / lb · % x ____ %] x ____ lb / Btu = ____ SCF / MMBtu

Note: Lack of significant figures may cause rounding errors between actual calculations and example calculations.

EXAMPLE CALCULATIONS (INFORMATION)

Specific Humidity (RH_{sp})

Note: RHsp (gr/lb) calculated using temperature, relative humidity, and barometric pressure with psychrometric chart, psychrometric calculator, or built in psychrometric algorithm.

$$RH_{sp}(lb/lb) = \left[\left(\frac{gr}{lb}\right) \times \frac{lb}{7000\ gr}\right]$$

$$RH_{sp} = \frac{gr}{lb} \times \frac{1\ lb}{7000\ gr} = \frac{lb\ H_2O}{lb\ Air}$$

Fuel Flow Conversion (Q_f)

Note: Qf(lb/min) is a value uptained from the source operator.

$$Q_f = \left[Q_f \times G \times \left(\frac{1}{MW_{Fuel}}\right)\right]$$

$$Q_f = \frac{lb}{min} \times \frac{60\ min}{hr} \times \frac{ft^3}{lb\text{-}mol} \times \frac{lb\text{-}mol}{lb} = SCFH$$

Combustor Inlet Pressure / Compressor Discharge Pressure (CIP / CDP)
(corrected from gauge to atmospheric pres. and conv. to mm Hg.)

Note: CIP / CDP (psig) is a value obtained from the source operator.

$$CIP/CDP = \left[(psig + P) \times \frac{51.71493\ mmHg}{1\ psi}\right]$$

$$CIP/CDP = (\quad psig + \quad) \times \frac{51.71493\ mmHg}{1\ psia} = mmHg\ (abs)$$

Heat Rate (MMBtu/hr)

$$HR = \frac{HHV_{DRY} \times Q_f}{1{,}000{,}000}$$

$$\text{Heat Rate} = \frac{Btu}{SCF} \times \frac{SCF}{hr} \times \frac{MMBtu}{10^6\ Btu} = \frac{MMBtu}{hr}$$

Estimated Stack Gas Moisture Content (B_{ws})

$$B_{ws}(\%) = \frac{2 \times Q_f}{Q_s} \times 100$$

$$B_{ws} = 2 \times \frac{SCF}{hr} \times \frac{hr}{SCF} \times 100 = \%$$

Note: Lack of significant figures may cause rounding errors between actual calculations and example calculations.

EXAMPLE CALCULATIONS (CALIBRATION)

Analyzer Calibration Error

RM 7E, (08-15-06), 12.2 Analyzer Calibration Error. For non-dilution systems, use Equation 7E-1 to calculate the analyzer calibration error for the low-, mid-, and high-level calibration gases. (calc for analyzer mid gas, if applicable)

$$ACE = \left(\frac{C_{Dir} - C_V}{CS}\right) \times 100 \qquad \text{Eq. 7E-1}$$

$$ACE = \frac{ppm - \quad ppm}{ppm} \times 100 = \%$$

Calibration Error and Estimated Point, RM 25A, THC Analyzer

RM 25A, (07-19-06), 8.4 Calibration Error Test. Immediately prior to the test series (within 2 hours of the start of the test), introduce zero gas and high-level calibration gas at the calibration valve assembly. Adjust the analyzer output to the appropriate levels, if necessary. Calculate the predicted response for the low-level and mid-level gases based on a linear response line between the zero and high-level response. Then introduce low-level and mid-level calibration gases successively to the measurement system. ... These differences must be less than 5 percent of the respective calibration gas value. (calc for THC analyzer mid gas, if applicable)

$$E_P = \frac{C_{Dir(H)} - C_{Dir(Z)}}{C_{V(H)} - C_{V(Z)}} \times C_{Dir(M)} + C_{Dir(Z)}$$

Eq. of a line
y=mx+b

$$E_p = \frac{ppm - \quad ppm}{ppm - \quad ppm} \times \quad ppm + \quad = \quad ppm$$

$$ACE = \left(\frac{C_{Dir} - C_V}{CS}\right) \times 100 \qquad \text{Eq. 7E-1}$$

$$ACE_{THC} = \frac{ppm - \quad ppm}{ppm} \times 100 = \%$$

Note: Lack of significant figures may cause rounding errors between actual calculations and example calculations.

EXAMPLE CALCULATIONS (BIAS, DRIFT, AND CORRECTED RAW AVERAGE)

System Bias

RM 7E, (08-15-06), 12.3 System Bias. For non-dilution systems, use Equation 7E-2 to calculate the system bias separately for the low-level and upscale calibration gases. (calc for analyzer upscale gas, Run 1 initial bias, if applicable)

$$SB = \left(\frac{C_S - C_{Dir}}{CS}\right) \times 100$$ Eq. 7E-2

SB = (ppm - ppm) / ppm x 100 = %

Drift Assessment

RM 7E, (08-15-06), 12.5 Drift Assessment. Use Equation 7E-4 to separately calculate the low-level and upscale drift over each test run. (calc for analyzer upscale drift, Run 1, if applicable)

$$D = \left|SB_{final} - SB_i\right|$$ Eq. 7E-4

D = | % - % | = %

Alternative Drift and Bias

RM 7E, (08-15-06), 13.2 / 13.3 System Bias and Drift. Alternatively, the results are acceptable if |Cs – Cdir| is ≤ 0.5 ppmv or if |Cs – Cv| is ≤ 0.5 ppmv (as applicable). (calc for analyzer initial upscale, Run 1, if applicable)

$$SB / D_{Alt} = \left|C_S - C_{Dir}\right|$$ Eq. Section 13.2 and 13.3

SB / D_{Alt} = | ppm - ppm | = ppm

Bias Adjusted Average

RM 7E, (08-15-06), 12.6 Effluent Gas Concentration. For each test run, calculate Cavg, the arithmetic average of all valid concentration values (e.g., 1-minute averages). Then adjust the value of Cavg for bias, using Equation 7E-5. (calc for analyzer, Run 1, if applicable)

$$C_{Gas} = \left(C_{Avg} - C_O\right) \times \left(\frac{C_{MA}}{C_M - C_O}\right)$$ Eq. 7E-5

C_{Gas} = (ppm - ppm) x (ppm / (ppm - ppm)) = ppm

EXAMPLE CALCULATIONS (BSFC)

Using LHV with Q_f (Btu/hp*hr)

$$BSFC\,(Btu / hp \cdot hr) = Q_f$$

BSFC = Btu / hp*hr = Btu / hp*hr

Using HHV with Q_f (SCFH)

$$BSFC\,(Btu / hp \cdot hr) = \frac{HHV \times Q_f}{bhp}$$

BSFC = Btu / SCF x SCF / hr x 1 / hp = Btu / hp*hr

Using LHV with Q_f (SCFH)

$$BSFC\,(Btu / hp \cdot hr) = \frac{LHV \times Q_f}{bhp}$$

BSFC = Btu / SCF x SCF / hr x 1 / hp = Btu / hp*hr

Using HHV with Q_f (Btu/hp*hr)

$$BSFC\,(Btu / hp \cdot hr) = \frac{Q_f \times HHV}{LHV}$$

BSFC = N/A Btu / hp*hr x Btu / SCF x scf / Btu = Btu / hp*hr

EXAMPLE CALCULATIONS (Emissions based on Table 29 values)

Emission Rate (lb/hr)
Q_f (Btu/hp*hr))

$$E(lb / hr) = \frac{E_{g/hp \cdot hr} \times bhp}{453.6}$$

E (lb/hr) = g / hp*hr x lb / 453.6 g x hp = lb / hr

Emission Rate (g/hp-hr)
Q_f (Btu/hp*hr))

$$E(g / hp \cdot hr) = CRA \times Q_f \times FFactor \times MW \times \frac{1}{10^6} \times \frac{1}{10^6} \times \frac{453.6}{G} \times \frac{20.9\%}{20.9\% - CRA_{O_2}}$$

E (g/hp-hr) = ppm x Btu / hp*hr x SCF / MMBtu x lb / lb-mol x 1 parts / 10^6 ppm x 1 MMBtu / 10^6 Btu x 453.6 g / lb x lb-mol / SCF x 20.9% / (20.9% - %) = g / hp*hr

Note: Lack of significant figures may cause rounding errors between actual calculations and example calculations.

EXAMPLE CALCULATIONS (RUNS)

Stack Exhaust Flow (Q_S) - RM19

$$Q_S = \left(\frac{FFactor \times Q_f \times HHV}{1{,}000{,}000}\right) \times \left(\frac{20.9\%}{20.9\% - C_{Gas(O2)}}\right)$$

Q_S = ____ SCF / MMBtu x ____ SCF / hr x ____ Btu / SCF x ____ MMBtu / 10^6 Btu x [20.90% / (20.9% - ____ %)] = ____ SCFH

NO_2 Conversion Efficiency Correction

RM 7E, (08-15-06), 12.8 NO2 - NO Conversion Efficiency Correction. If desired, calculate the total NOX concentration with a correction for converter efficiency using Equations 7E-8. (calc for non-bias corrected (raw) NOx gas, Run 1, if applicable)

$$NOx_{Corr} = NO + \frac{NOx - NO}{Eff_{NO2}} \times 100 \qquad \text{Eq. 7E-8}$$

NOx_{Corr} = ____ ppm + (____ ppm - ____ ppm) / ____ % x 100 = ____ ppm

Moisture Correction

RM 7E, (08-15-06), RM7E, (08-15-06), 12.10 Moisture Correction. Use Equation 7E-10 if your measurements need to be corrected to a dry basis. (calc for THC analyzer, Run 1, if applicable) Note: Calculations may not match as Run 1 results are typically also bias adjusted

$$C_D = \frac{C_W}{1 - B_{WS}} \qquad \text{Eq. 7E-10}$$

C_D = ____ ppmvw / (1 - ____) = ____ ppmvd

Diluent-Corrected Polutant Concentration, O_2 Based

RM 20, (11-26-02), 7.3.1 Correction of Pollutant Concentration Using O2 Concentration. Calculate the O2 corrected pollutant concentration, as follows: (calc for gas, Run 1, if applicable)

$$C_{adj} = C_{Gas(Target)} \times \left(\frac{20.9\% - AdjFactor}{20.9\% - C_{Gas(O2)}}\right) \qquad \text{Eq. 20-4}$$

C_{adj} = ____ ppm x [(20.9% - ____ %) / (20.9% - ____ %)] = ____ ppm@%O_2

Diluent-Corrected Polutant Concentration, CO_2 Based

RM 20, (11-26-02), 7.3.2 Correction of Pollutant Concentration Using CO2 Concentration. Calculate the CO2 corrected pollutant concentration, as follows: (calc for gas, Run 1, if applicable)

$$C_{adj} = C_{Gas(Target)} \times \frac{X_{CO2}}{C_{Gas(CO2)}} \qquad \text{Eq. 20-5}$$

C_{adj} = ____ ppm x ____ % / ____ % =

7.2 CO_2 Correction Factor. If pollutant concentrations are to be corrected to percent O_2 and CO_2 concentration is measured in lieu of O_2 concentration measurement, a CO_2 correction factor is needed. Calculate the CO_2 correction factor as follows: 7.2.1 Calculate the fuel specific F_o, as follows:

$$F_0 = \frac{0.209\, F_d}{F_c} \qquad \text{Eq. 20-2}$$

F_0 = 0.209 x ____ SCF/MMBtu / ____ SCF/MMBtu =

7.2.2. Calculate the CO_2 correction factor for correcting measurement data to percent oxygen, as follows:

$$X_{CO2} = \frac{20.9\% - AdjFactor}{F_0} \qquad \text{Eq. 20-3}$$

X_{CO2} = (20.9% - ____ %) / ____ = ____ %

Diluent-Corrected Polutant Concentration Corrected to ISO Conditions

40CFR60.335(b)(1), Conversion for conc. at ISO Conditions (68°F, 1 atm). Calculate, as follows: (calc for @% with Run 1 data, if applicable)

$$C_{ISO} = C_{Adj} \times \sqrt{\frac{P_r}{P_o}} \times e^{(19 \times (H_O - 0.00633))} \times \left(\frac{288}{T_a}\right)^{1.53}$$

C_{ISO} = ____ ppm@%O_2 x $\sqrt{(\text{psig} + 14.69232\ \text{psi}) / (0.01933677\ \text{psi/mm Hg.})}$ / $\sqrt{(\text{psig} + \_\_\_\_\ \text{psi}) / (0.01933677\ \text{psi/mm Hg.})}$ x $e^{(19 \times (\_\_\_\_\ \text{lb/lb} - 0.00633))}$ x $(288\ \text{K} / \_\_\_\_\ \text{K})^{1.53}$ = ____ ppm@% and ISO

Note: Lack of significant figures may cause rounding errors between actual calculations and example calculations.

EXAMPLE CALCULATIONS (RUNS)

Emissions Rate (lb/hr)

Calculation for pound per hour emission rate. Calculate, as follows: (calc for gas Run 1, if applicable)

$$E_{lb/hr} = \frac{C_{Gas}}{10^6} \times \frac{Q_S \times MW}{G}$$

$$E_{lb/hr} = \frac{\text{ppm}}{10^6 \text{ ppm/part}} \times \frac{\text{SCFH} \times \text{lb/lb-mol}}{\text{SCF/lb-mol}} = \frac{\text{lb}}{\text{hr}}$$

Emissions Rate (ton/year)

Calculation for tons per year emission rate based on 8760 hours per year. Calculate, as follows: (calc for gas Run 1, if applicable)

$$E_{ton/yr} = \frac{E_{lb/hr} \times hr_{year}}{2000}$$

$$E_{ton/yr} = \frac{\text{lb}}{\text{hr}} \times \frac{\text{hr}}{\text{year}} \times \frac{\text{ton}}{2000 \text{ lb}} = \frac{\text{ton}}{\text{year}}$$

Emissions Rate (lb/MMBtu)

RM 19, (07-19-06), 12.2 Emission Rates of PM, SO2, and NOx. Select from the following sections the applicable procedure to compute the PM, SO2, or NOx emission rate (E) in ng/J (lb/million Btu). (calc for gas Run 1, if applicable)

Oxygen Based

12.2.1 Oxygen-Based F Factor, Dry Basis. When measurements are on a dry basis for both O_2 (%O_2d) and pollutant (Cd) concentrations, use the following equation:

$$E_{lb/MMBtu} = \frac{C_{Gas} \times F_d Factor \times Conv_C \times 20.9\%}{20.9\% - C_{Gas(O2)}} \qquad \text{Eq. 19-1}$$

$$E_{lb/MMBtu} = \frac{\text{ppm} \times \text{SCF/MMBtu} \times \text{lb/ppm*ft}^3 \times 20.9\%}{20.9\% - \%} = \frac{\text{lb}}{\text{MMBtu}}$$

Carbon Dioxide Based

12.2.4 Carbon Dioxide-Based F Factor, Dry Basis. When measurements are on a dry basis for both CO_2 (%CO_2d) and pollutant (Cd) concentrations, use the following equation:

$$E_{lb/MMBtu} = \frac{C_{Gas} \times F_d Factor \times Conv_C \times 100\%}{C_{Gas(CO2)}} \qquad \text{Eq. 19-6}$$

$$E_{lb/MMBtu} = \frac{\text{ppm} \times \text{SCF/MMBtu} \times \text{lb/ppm*ft}^3 \times 100\%}{\%} = \frac{\text{lb}}{\text{MMBtu}}$$

Conversion Constant

Convc for

$$Conv_c(lb/ppm \cdot ft^3) = \frac{\frac{MW}{G}}{10^6}$$

$$Conv_c = \frac{\frac{\text{lb}}{\text{lb•mole}} \times \frac{\text{lb•mole}}{\text{SCF}}}{10^6} = \frac{\text{lb}}{\text{ppm-ft}^3}$$

Sulfur Dioxide Rate (lb/MMBtu), 40CFR60, App. A, RM 19, Eq. 19-25 (11/20/03)

$$SO_2(lb/MMBtu) = 0.97 \times K \times \frac{S(wt\%)}{GCV}$$

$$SO_2 = 0.97 \times \frac{2\text{x}10^4 \text{ Btu}}{\text{wt\%•MMBtu}} \times \frac{\text{wt\%}}{\text{Btu/lb}} = \frac{\text{lb}}{\text{MMBtu}}$$

Emissions Rate (g/hp-hr)

Calculation for grams per horsepower-hour. Calculate, as follows: (calc for gas Run 1, if applicable)

$$E_{g/hp\text{-}hr} = \frac{E_{lb/hr} \times 453.6}{mw \times 1314.022} \text{ or } \frac{E_{lb/hr} \times 453.6}{hp}$$

$$E_{g/hp\text{-}hr} = \frac{\text{lb}}{\text{hr}} \times \frac{453.6 \text{ g}}{\text{lb}} \times \frac{1}{\text{mw}} \times \frac{\text{mw}}{1314.022 \text{ hp}} = \frac{\text{g}}{\text{hp*hr}}$$

$$E_{g/hp\text{-}hr} = \frac{\text{lb}}{\text{hr}} \times \frac{453.6 \text{ g}}{\text{lb}} \times \frac{1}{\text{hp}} = \frac{\text{g}}{\text{hp*hr}}$$

Note: Lack of significant figures may cause rounding errors between actual calculations and example calculations.

EXAMPLE CALCULATIONS (FTIR SPIKE)

Concentration to dilute by 90% (ppmvw)

$$AVG_d = \frac{AVG_r}{2}$$

AVG_d = ppmvw / 2 = ppmvw

Ideal matrix spike yield (ppmvw)

$$Y_{ideal} = AVG_d \times \left(\frac{Q_m}{Q_{sys}}\right) + AVG_r \times \left(1 - \frac{Q_m}{Q_{sys}}\right)$$

Y_{ideal} = ppmvw x (lpm / lpm) + ppmvw x (1 - lpm / lpm) = ppmvw

Minimum matrix spike yield (ppmvw)

$$Y_{min} = Y_{ideal} \times 0.7$$

Y_{ideal} = ppmvw x 0.7 = ppmvw

Maximum matrix spike yield (ppmvw)

$$Y_{max} = Y_{ideal} \times 1.3$$

Y_{ideal} = ppmvw x 1.3 = ppmvw

Note: Lack of significant figures may cause rounding errors between actual calculations and example calculations.

RM 7E, (08-15-06), 12.1 Nomenclature. The terms used in the equations are defined as follows:

ACE = Analyzer calibration error, percent of calibration span.
B_{WS} = Moisture content of sample gas as measured by Method 4 or other approved method, percent/100.
C_{Avg} = Average unadjusted gas concentration indicated by data recorder for the test run.
C_D = Pollutant concentration adjusted to dry conditions.
C_{Dir} = Measured concentration of a calibration gas (low, mid, or high) when introduced in direct calibration mode.
C_{Gas} = Average effluent gas concentration adjusted for bias.
C_M = Average of initial and final system calibration bias (or 2-point system calibration error) check responses for the upscale calibration gas.
C_{MA} = Actual concentration of the upscale calibration gas, ppmv.
C_O = Average of the initial and final system calibration bias (or 2-point system calibration error) check responses from the low-level (or zero) calibration gas.
C_S = Measured concentration of a calibration gas (low, mid, or high) when introduced in system calibration mode.
C_{SS} = Concentration of NOx measured in the spiked sample.
C_{Spike} = Concentration of NOx in the undiluted spike gas.
C_{Calc} = Calculated concentration of NOx in the spike gas diluted in the sample.
C_V = Manufacturer certified concentration of a calibration gas (low, mid, or high).
C_W = Pollutant concentration measured under moist sample conditions, wet basis.
CS = Calibration span.
D = Drift assessment, percent of calibration span.
E_p = The predicted response for the low-level and mid-level gases based on a linear response line between the zero and high-level response.
Eff_{NO2} = NO_2 to NO converter efficiency, percent.
H = High calibration gas, designator.
L = Low calibration gas, designator.
M = Mid calibration gas, designator.
NOFinal = The average NO concentration observed with the analyzer in the NO mode during the converter efficiency test in Section 16.2.2.
NOxCorr = The NOx concentration corrected for the converter efficiency.
NOxFinal = The final NOx concentration observed during the converter efficiency test in Section 16.2.2.
NOxPeak = The highest NOx concentration observed during the converter efficiency test in Section 16.2.2.
Q_{Spike} = Flow rate of spike gas introduced in system calibration mode, L/min.
Q_{Total} = Total sample flow rate during the spike test, L/min.
R = Spike recovery, percent.
SB = System bias, percent of calibration span.
SB_i = Pre-run system bias, percent of calibration span.
SB_f = Post-run system bias, percent of calibration span.
SB / D_{Alt} = Alternative absolute difference criteria to pass bias and/or drift checks.
SCE = System calibration error, percent of calibration span.
SCE_i = Pre-run system calibration error, percent of calibration span.
SCE_{final} = Post-run system calibration error, percent of calibration span.
Z = Zero calibration gas, designator.

40CFR60.355(b)(1), (09-20-06), Nomenclature. The terms used in the equations are defined as follows:

P_r = reference combustor inlet absolute pressure at 101.3 kilopascals ambient pressure, mm Hg
P_o = observed combustor inlet absolute pressure at test, mm Hg
H_o = observed humidity of ambient air, g H_2O/g air
e = transcendental constant, 2.718
T_a = ambient temperature, K

Small Engine and FTIR Nomenclature. The terms used in the equations are defined as follows:

bhp = brake horsepower
hp = horsepower
Q_{sys} = system flow (lpm)
Q_m = matrix spike flow (lpm)

RM 19, (07-29-06), 12.1 Nomenclature. The terms used in the equations are defined as follows:

AdjFactor = percent oxygen or carbon dioxide adjustment applied to a target pollutant
B_{wa} = Moisture fraction of ambient air, percent.
Btu = British thermal unit
$\%_C$ = Concentration of carbon from an ultimate analysis of fuel, weight percent.
$\%_{CO2d}$, $\%_{CO2w}$ = Concentration of carbon dioxide on a dry and wet basis, respectively, percent.
CIP / CDP = Combustor inlet pressure / compressor discharge pressure (mm Hg); note, some manufactures reference as PCD.
E = Pollutant emission rate, ng/J (lb/million Btu).
E_a = Average pollutant rate for the specified performance test period, ng/J (lb/million Btu).
E_{ao}, E_{ai} = Average pollutant rate of the control device, outlet and inlet, respectively, for the performance test period, ng/J (lb/million Btu).
E_{bi} = Pollutant rate from the steam generating unit, ng/J (lb/million Btu).
E_{bo} = Pollutant emission rate from the steam generating unit, ng/J (lb/million Btu).
E_{ci} = Pollutant rate in combined effluent, ng/J (lb/million Btu).
E_{co} = Pollutant emission rate in combined effluent, ng/J (lb/million Btu).
E_d = Average pollutant rate for each sampling period (e.g.,24-hr Method 6B sample or 24-hr fuel sample) or for each fuel lot (e.g., amount of fuel bunkered), ng/J (lb/million Btu).
E_{di} = Average inlet SO_2 rate for each sampling period d, ng/J (lb/million Btu).
E_g = Pollutant rate from gas turbine, ng/J (lb/million Btu).
E_{ga} = Daily geometric average pollutant rate, ng/J (lbs/million Btu) or ppm corrected to 7 percent O_2.
E_{jo},E_{ji} = Matched pair hourly arithmetic average pollutant rate, outlet and inlet, respectively, ng/J (lb/million Btu) or ppm corrected to 7 percent O_2.
E_h = Hourly average pollutant, ng/J (lb/million Btu).
E_{hj} = Hourly arithmetic average pollutant rate for hour "j," ng/J (lb/million Btu) or ppm corrected to 7 percent O_2.
EXP = Natural logarithmic base (2.718) raised to the value enclosed by brackets.
Fc = Ratio of the volume of carbon dioxide produced to the gross calorific value of the fuel from Method 19
F_d, F_w, F_c = Volumes of combustion components per unit of heat content, scm/J (scf/million Btu).
ft^3 = cubic feet
G = ideal gas conversion factor
(385.23 SCF/lb-mol at 68 deg F & 14.696 psia)
GCM = gross Btu per SCF (constant, compound based)
GCV = Gross calorific value of the fuel consistent with the ultimate analysis, kJ/kg (Btu/lb).
GCV_p, GCV_r = Gross calorific value for the product and raw fuel lots, respectively, dry basis, kJ/kg (Btu/lb).
$\%_H$ = Concentration of hydrogen from an ultimate analysis of fuel, weight percent.
H_b = Heat input rate to the steam generating unit from fuels fired in the steam generating unit, J/hr (million Btu/hr).
H_g = Heat input rate to gas turbine from all fuels fired in the gas turbine, J/hr (million Btu/hr).
$\%_{H2O}$ = Concentration of water from an ultimate analysis of fuel, weight percent.
H_r = Total numbers of hours in the performance test period (e.g., 720 hours for 30-day performance test period).
K = volume of combustion component per pound of component (constant)
K = Conversion factor, 10^{-5} (kJ/J)/(%) [10^6 Btu/million Btu].
K_c = (9.57 scm/kg)/% [(1.53 scf/lb)/%].
K_{co} = (2.0 scm/kg)/% [(0.321 scf/lb)/%].
$K_{h,d}$ = (22.7 scm/kg)/% [(3.64 scf/lb)/%].
$K_{h,w}$ = (34.74 scm/kg)/% [(5.57 scf/lb)/%].
K_n = (0.86 scm/kg)/% [(0.14 scf/lb)/%].
K_o = (2.85 scm/kg)/% [(0.46 scf/lb)/%].
K_s = (3.54 scm/kg)/% [(0.57 scf/lb)/%].
K_{sulfur} = $2x10^4$ Btu/wt%-MMBtu
K_w = (1.30 scm/kg)/% [(0.21 scf/lb)/%].
lb = pound
ln = Natural log of indicated value.
L_p,L_r = Weight of the product and raw fuel lots, respectively, metric ton (ton).
$\%_N$ = Concentration of nitrogen from an ultimate analysis of fuel, weight percent.
$M_{\%}$ = mole percent
mol = mole
MW = molecular weight (lb/lb-mol)
MW_{AIR} = molecular weight of air (28.9625 lb/lb-mole)[1]
NCM = net Btu per SCF (constant based on compound)
$\%_O$ = Concentration of oxygen from an ultimate analysis of fuel, weight percent.
$\%_{O2d}$, $\%_{O2w}$ = Concentration of oxygen on a dry and wet basis, respectively, percent.
P_B = barometirc pressure, in Hg
P_s = Potential SO2 emissions, percent.
$\%_S$ = Sulfur content of as-fired fuel lot, dry basis, weight percent.
S_e = Standard deviation of the hourly average pollutant rates for each performance test period, ng/J (lb/million Btu).
$\%_{Sf}$ = Concentration of sulfur from an ultimate analysis of fuel, weight percent.
S(wt%) = weight percent of sulfur, per lab analysis by appropriate ASTM standard
S_i = Standard deviation of the hourly average inlet pollutant rates for each performance test period, ng/J (lb/million Btu).
S_o = Standard deviation of the hourly average emission rates for each performance test period, ng/J (lb/million Btu).
$\%S_p$, $\%S_r$ = Sulfur content of the product and raw fuel lots respectively, dry basis, weight percent.
SCF = standard cubic feet
SH = specific humidity, pounds of water per pound of air
$t_{0.95}$ = Values shown in Table 19-3 for the indicated number of data points n.
T_{amb} = ambient temperature, °F
W/D Factor = 1.0236 = conv. at 14.696 psia and
68 deg F (ref. Civil Eng. Ref. Manual, 7th Ed.)
X_{CO2}=CO_2 Correction factor, percent.
X_k = Fraction of total heat input from each type of fuel k.

Calculations, Formulas, and Constants

The following information supports the spreadsheets for this testing project.

Given Data:

Ideal Gas Conversion Factor = 385.23 SCF/lb-mol at 68 deg F & 14.696 psia

Fuel Heating Value is based upon Air Hygiene's fuel gas calculation sheet. All calculations are based upon a correction to 68 deg F & 14.696 psia

High Heating Values (HHV) are used for the Fuel Heating Value, F-Factor, and Fuel Flow Data per EPA requirements.

ASTM D 3588

Molecular Weight of NOx (lb/lb-mole) =	46.01
Molecular Weight of CO (lb/lb-mole) =	28.00
Molecular Weight of SO2 (lb/lb-mole) =	64.00
Molecular Weight of THC (propane) (lb/lb-mole) =	44.00
Molecular Weight of VOC (methane) (lb/lb-mole) =	16.00
Molecular Weight of NH3 (lb/lb-mole) =	17.03
Molecular Weight of HCHO (lb/lb-mole) =	30.03

40CFR60, App. A., RM 19, Table 19-1

Conversion Constant for NOx =	0.0000001194351
Conversion Constant for CO =	0.0000000726839
Conversion Constant for SO2 =	0.0000001661345
Conversion Constant for THC =	0.0000001142175
Conversion Constant for VOC (methane) =	0.0000000415336
Conversion Constant for NH_3 =	0.0000000442074
Conversion Constant for HCHO =	0.0000000779534

NOTE: units are lb/ppm*ft^3

Formulas:

1. Corrected Raw Average (C_{Gas}), 40CFR60, App. A, RM 7E, Eq. 7E-5 (08/15/06)

$$C_{Gas} = \left(C_{Avg} - C_O\right) \times \left(\frac{C_{MA}}{C_M - C_O}\right)$$

2. Correction to % O_2, 40CFR60, App. A, RM 20, Eq. 20-5 (11/26/02)

$$C_{adj} = C_{Gas(Target)} \times \left(\frac{20.9\% - AdjFactor}{20.9\% - C_{Gas(O2)}}\right)$$

3. Emission Rate in lb/hr

$$E_{lb/hr} = \frac{C_{Gas}}{10^6} \times \frac{Q_S \times MW}{G}$$

4. Emission Concentration in lb/MMBtu (O_2 based)

$$E_{lb/MMBtu} = \frac{C_{Gas} \times F_d Factor \times Conv_C \times 20.9\%}{20.9\% - C_{Gas(O2)}}$$

5. Emission Concentration in lb/MMBtu (CO_2 based)

$$E_{lb/MMBtu} = \frac{C_{Gas} \times F_d Factor \times Conv_C \times 100\%}{C_{Gas(CO2)}}$$

RATA SHEET CALCULATIONS

d = Reference Method Data - CEMS Data

S_d = Standard Deviation

CC = Confident Coefficient

n = number of runs

$t_{0.025}$ = 2.5 percent confidence coefficent T-values

RA = relative accuracy

ARA = alternative relative accuracy

BAF = Bias adjustment factor

n	t	n	t	n	t
2	12.706	7	2.447	12	2.201
3	4.303	8	2.365	13	2.179
4	3.182	9	2.306	14	2.160
5	2.776	10	2.262	15	2.145
6	2.571	11	2.228	16	2.131

1. Difference

$$d = \sum_{i=1}^{n} d_i$$

2. Standard Deviation

$$S_d = \sqrt{\frac{\sum_{i=1}^{n} d_i^2 - \left[\frac{\left(\sum_{i=1}^{n} d_i\right)^2}{n}\right]}{n-1}}$$

3. Confident Coefficient

$$CC = t_{0.025} \times \frac{S_d}{\sqrt{n}}$$

4. Relative Accuracy

$$RA = \frac{|d_{AVG}| + |CC|}{RM_{AVG}} \times 100$$

5. Alternative Relative Accuracy

$$ARA = \frac{|d_{AVG}| + |CC|}{AS} \times 100$$

5. Bias Adjustment Factor

$$BAF = 1 + \left(\frac{|d_{AVG}|}{CEM_{AVG}}\right)$$

APPENDIX E

STATEMENT OF QUALIFICATIONS

STATEMENT OF QUALIFICATIONS 2014

AIR HYGIENE, INC.

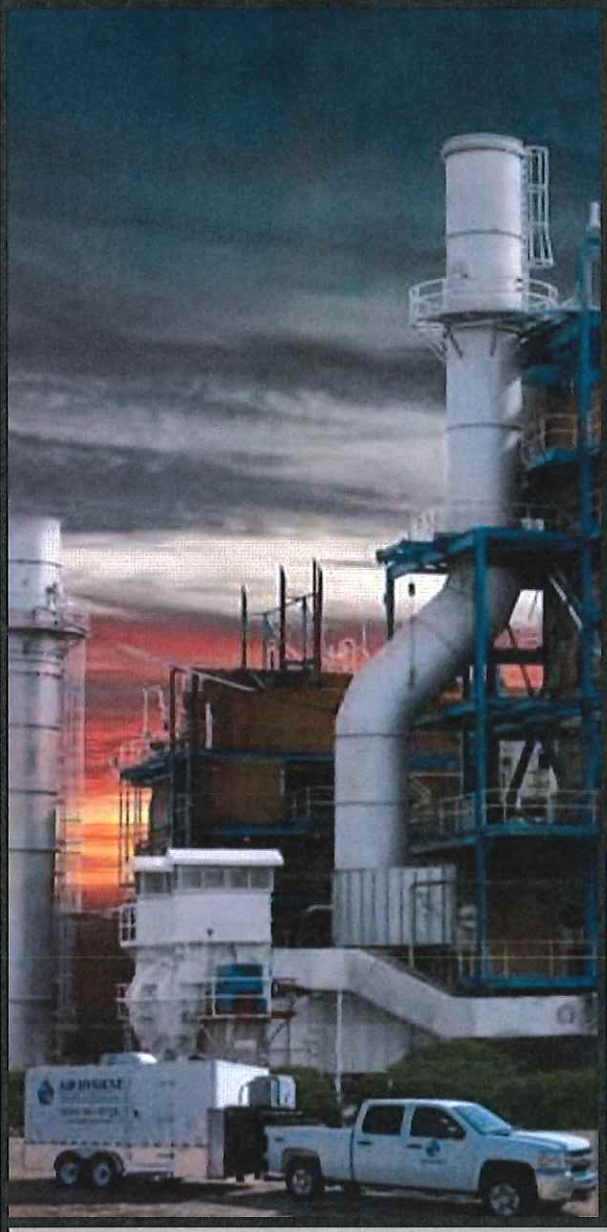

Corporate Headquarters:
1600 West Tacoma Street
Broken Arrow, OK 74012

(918) 307-8865
(888) 461-8778

Remote Office Locations:
Las Vegas, NV
Ft. Worth, TX
Austin, TX
Shreveport, LA
Chicago, IL
Pittsburgh, PA

WWW.AIRHYGIENE.COM

Air-Hygiene-International-Stack-Testing

@AirHygiene

AI/AI/CO
11806361 8955

RECEIVE
APR - 2 2015
Air Toxics & Inspection Coordination Branch
6EN-A

March 17, 2015

Regional Administrator
U.S. EPA - Region 6
Fountain Place 12th Floor, Suite 1200
1445 Ross Avenue
Dallas, TX 75202-2733

Dear Administrator:

Enclosed please find one copy each of the following 40 CFR 60, Subpart JJJJ emission compliance test reports, submitted by Air Hygiene International, Inc., on behalf of XTO Energy, Inc. for the following engines.

- Dedek 1-1H2X, unit #805653, Love County, OK
- Green 1-1H, unit #805640, Carter County, OK
- Greenway 1H-35, unit #805649, Carter County, OK
- Galileo 1-1H / Luna 1-6H, unit #805650, Carter County, OK
- Veronica 5-9, unit# 6645, Carter County, OK

If you have any questions, comments, or concerns please feel free to contact me at (318) 560-9110 or mbarry@airhygiene.com.

Sincerely,

Mathew Barry, QSTI
Test Manager

Encl. (5)

cc:
xto-15-multi.ok-eng#3
William Payne, XTO Energy, Inc.

AIR HYGIENE, INC.

Testing Solutions for a Better World

EMISSION COMPLIANCE TEST
EPA 40 CFR PART 60 SUBPART JJJJ
FOR THE
CATERPILLAR, G3306 TA, UNIT #805640, SERIAL #R6S02051
PREPARED FOR
XTO ENERGY, INC.
AT THE
GREEN 1-1H
CARTER COUNTY, OKLAHOMA
FEBRUARY 19, 2015

PERMIT #: 2014-0283-NOI

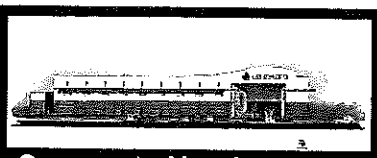

Corporate Headquarters
1600 W Tacoma Street
Broken Arrow, OK 74012

AIR HYGIENE, INC.

(918) 307-8865 or (888) 461-8778
www.airhygiene.com

Remote Testing Offices
Las Vegas, NV 89156
Ft. Worth, TX 76028
Humble, TX 77338
Shreveport, LA 71115
Miami, FL 33101
Philadelphia, PA 19136

EMISSION COMPLIANCE TEST
EPA 40 CFR PART 60 SUBPART JJJJ
FOR THE
CATERPILLAR, G3306 TA, UNIT #805640,
SERIAL #R6S02051
PREPARED FOR
XTO ENERGY, INC.
AT THE
GREEN 1-1H
CARTER COUNTY, OKLAHOMA
FEBRUARY 19, 2015

Prepared and Reviewed by:

Todd R. Sturgeon, QSTI
Project Manager

Aaron Blum
Test Technician

Mathew Barry, QSTI
Test Manager

(this page intentionally left blank)

Table of Contents

1.0 INTRODUCTION ____ *1*

1.1 TEST PURPOSE AND OBJECTIVES ____ 1

1.2 SUMMARY OF TEST PROGRAM ____ 1

1.2.1 Participating Organizations ____ 1

1.2.2 Industry ____ 1

1.2.3 Air Permit and Federal Requirements ____ 1

1.2.4 Plant Location ____ 1

1.2.5 Equipment Tested ____ 2

1.2.6 Emission Points ____ 2

1.2.7 Emission Parameters Measured ____ 2

1.2.8 Date of Emission Test ____ 2

1.3 KEY PERSONNEL ____ 2

2.0 SUMMARY OF TEST RESULTS ____ *2*

3.0 SOURCE OPERATION ____ *3*

3.1 PROCESS DESCRIPTION ____ 3

3.2 SAMPLING LOCATION ____ 3

4.0 SAMPLING AND ANALYTICAL PROCEDURES ____ *3*

4.1 TEST METHODS ____ 3

4.2 INSTRUMENT CONFIGURATION AND OPERATIONS FOR GAS ANALYSIS ____ 4

APPENDICES

Appendix A Test Results and Calculations

Appendix B Emission Data Records

Appendix C Calibration Gas Certifications

Appendix D Quality Assurance and Quality Control Data

Appendix E Fuel Analysis Records

Appendix F Field Sheet

Emissions Compliance Test
Caterpillar, G3306 TA, Unit #805640, Serial #R6S02051
XTO Energy, Inc.
Green 1-1H
Carter County, Oklahoma
February 19, 2015

1.0 INTRODUCTION

Air Hygiene International, Inc. (Air Hygiene) has completed the emissions testing study for nitrogen oxides (NOx), carbon monoxide (CO), total hydrocarbons/volatile organic compounds (THC/VOC), and oxygen (O_2) from the exhaust of the Caterpillar, G3306 TA, Unit #805640, Serial #R6S02051 for XTO Energy, Inc. at the Green 1-1H in Carter County, Oklahoma. This report details the background, results, process description, and the sampling/analysis methodology of the stack sampling survey conducted on February 19, 2015.

1.1 TEST PURPOSE AND OBJECTIVES

The purpose of the test was to conduct the initial emission test to document levels of selected pollutants at maximum operation levels of the unit. The information will be used to confirm compliance with the air quality permit requirements. The specific objective was to determine the emission concentration of NOx, CO, THC/VOC, and O_2 from the exhaust of XTO Energy, Inc.'s Caterpillar, G3306 TA, Unit #805640, Serial #R6S02051.

1.2 SUMMARY OF TEST PROGRAM

The following list details pertinent information related to this specific project:

1.2.1 Participating Organizations
- Oklahoma Department of Environmental Quality (ODEQ)
- XTO Energy, Inc.
- Air Hygiene

1.2.2 Industry
- Natural Gas Exploration and Production
- Natural Gas Transport and Processing

1.2.3 Air Permit and Federal Requirements
- Permit Number: 2014-0283-NOI

1.2.4 Plant Location
- Green 1-1H in Carter County, Oklahoma
- GPS Coordinates [Latitude 34.144300, Longitude -96.736690]

1.2.5 Equipment Tested

- Caterpillar, G3306 TA, Unit #805640, Serial #R6S02051
- Engine Name Plate and Serial Number Verification

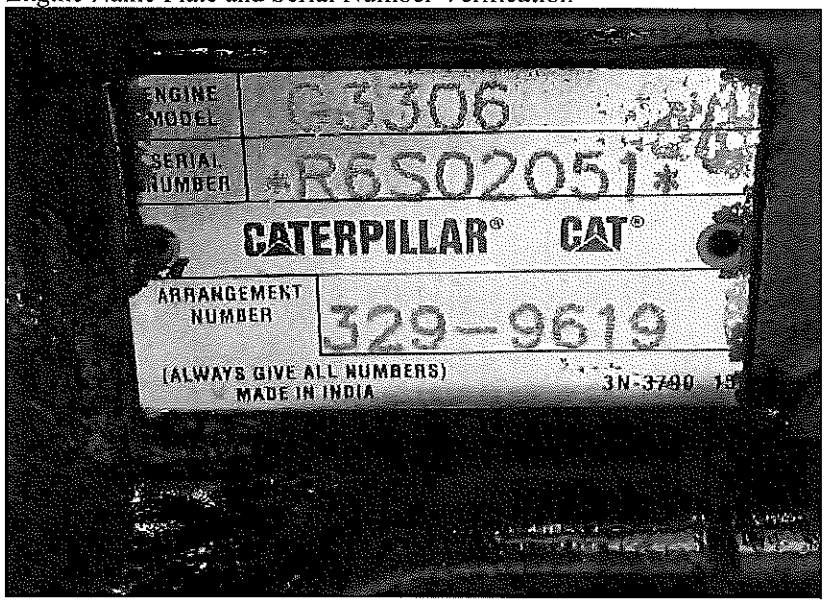

1.2.6 Emission Points

- Exhaust from the Caterpillar, G3306 TA, Unit #805640, Serial #R6S02051

1.2.7 Emission Parameters Measured

- NOx
- CO
- THC/VOC
- O_2

1.2.8 Date of Emission Test

- February 19, 2015

1.3 KEY PERSONNEL

XTO Energy, Inc.:	William J. Payne	903-391-1456
Air Hygiene:	Mathew Barry	918-307-8865
Air Hygiene:	Jordan McCormick	918-307-8865

2.0 SUMMARY OF TEST RESULTS

Results from the sampling conducted on XTO Energy, Inc.'s Caterpillar, G3306 TA, Unit #805640, Serial #R6S02051 located at the Green 1-1H on February 19, 2015 are summarized in the following table and relate only to the items tested.

TABLE 2.1: ENGINE EMISSIONS REPORT
XTO ENERGY, INC.
CATERPILLAR, G3306 TA, UNIT #805640, SERIAL #R6S02051

Test Period:	Qtr 1 - 2015		**Manufacturing or Rebuild Date**		**Air Permit Number:**	2014-0283-NOI
Location:	Green 1-1H				**Unit Number:**	805640
Date:	February 19, 2015		01/21/14		**Suction Pressure (psi):**	40
Project Number:	xto-15-multi.ok-eng#3				**Discharge Pressure (psi):**	971
Engine Manufacturer:	Caterpillar		**Federal Regulatory Citation**		**Stack Exhaust Temperature (°F):**	--
Engine Model:	G3306 TA				**Rated Horsepower (hp_r):**	203
Engine Serial Number:	R6S02051				**Brake Horsepower (bhp):**	186
Analyzer Manufacturers:	TECO(NOx), TECO(CO), SERV(O2), VIG(THC), MKS(THC,CH_4,C_2H_6)		Subpart JJJJ		**Engine Fuel Flow (SCFH):**	872
Analyzer Model Numbers:	42C, 48C, 1440, 210, 2030				**Specific Gravity:**	0.7667
Date Analyzers Calibrated:	February 19, 2015		§60.4233 and/or §60.4243		**Fuel Heating Value [HHV] (Btu/SCF):**	1,247
Test Results and Calculations:	Appendix A				**BSFC (Btu/hp*hr):**	5,851
Emission Data Records:	Appendix B				**Annual Hours Allowed to Operate:**	8,760
Calibration Gas Certifications:	Appendix C				**Engine Speed (rpm):**	1,648
Quality Assurance and QC Data:	Appendix D				**Air Manifold Temp (°F):**	82
Fuel Analysis Records:	Appendix E				**Air Manifold Pressure (psi):**	15
Ambient Temperature (°F):	36.3				**Operating Hours (hours):**	–
Barometric Pressure (in. Hg):	30.42				**Available Horsepower (hp_a):**	186
Relative Humidity (%):	47				**Rated Engine Speed (rpm):**	1,800
					Rated Manifold Pressure (in. Hg (abs)):	--
					Engine Load (%):	100
					Fuel Flow (scfm):	21

Emission Test Results

Pollutant (units)		Stack Test Results	State Limits	Federal Limits	Passing
O_2	(%)	0.13	--	--	--
NOx	(ppmvd)	33.84	--	--	--
CO	(ppmvd)	201.29	--	--	--
VOC	(ppmvd)	4.56	--	--	--
NOx	(ppmvd@15%O_2)	9.62	--	82.00	YES
CO	(ppmvd@15%O_2)	57.23	--	270.00	YES
VOC	(ppmvd@15%O_2)	1.30	--	60.00	YES
NOx	(g/hp*hr)	0.09	--	1.00	YES
CO	(g/hp*hr)	0.34	--	2.00	YES
VOC	(g/hp*hr)	0.01	--	0.70	YES

-Brake horsepower based on available horsepower multiplied by load.
-Available horsepower based on the engine speed ratio (actual vs rated), see Engine Spec Sheet, Appendix B.
-Load available from engine panel and/or site personnel.

All testing conducted according to United States Environmental Protection Agency (EPA), Methods: 3a, 7e, 10, 19, 18/25a and 320.

Tested By: Air Hygiene International, Inc.
Tester(s) / Test Unit(s): MB/JM

3.0 SOURCE OPERATION

3.1 PROCESS DESCRIPTION

The unit tested was a Caterpillar, G3306 TA, Unit #805640, Serial #R6S02051. The engine is rated at 203 horsepower. The engine emissions are vented to the atmosphere through an exhaust system extending from the engine. The rich burn engine uses a NSCR (Non-Selective Catalytic Reduction) catalyst located between the engine and the exhaust stack.

3.2 SAMPLING LOCATION

The stack measures 4 inches in diameter with an elevation at the top of 10 feet above grade. The stack lacked access to exhaust ports and testing was conducted using a stainless steel hook over the top of the stack and down into the exhaust. The hook extended at least 0.5 stack diameters from the exit to the atmosphere and at least 2.0 stack diameters from the upstream disturbance. All exhaust samples for gaseous emissions were continuously drawn from a single point near the center of the stack.

4.0 SAMPLING AND ANALYTICAL PROCEDURES

4.1 TEST METHODS

The emission test on the Caterpillar, G3306 TA, Unit #805640, Serial #R6S02051 at the Green 1-1H was performed following United States Environmental Protection Agency (EPA) methods described by the Code of Federal Regulations (CFR). Table 4.1 outlines the specific methods performed on February 19, 2015.

TABLE 4.1
SUMMARY OF SAMPLING METHODS

Pollutant or Parameter	Sampling Method	Analysis Method
Sample Point Location	EPA Method 1	Equal Area Method
Oxygen	EPA Method 3A	Paramagnetic Cell
Nitrogen Oxides	EPA Method 7E	Chemiluminescent Analyzer
Carbon Monoxide	EPA Method 10	Nondispersive Infrared Analyzer
Stack Flow Rate	EPA Method 19	Dry Oxygen F Factor
Total Hydrocarbons, Volatile Organic Compounds, Methane, Ethane, CO_2, H_2O	EPA Method 320	Fourier Transform Infrared

4.2 INSTRUMENT CONFIGURATION AND OPERATIONS FOR GAS ANALYSIS

The sampling and analysis procedures used during these tests conform with the methods outlined in the Code of Federal Regulations (CFR), Title 40, Part 60, Appendix A, Methods 1, 3A, 7E, 10, 19, and Appendix A, Method 320.

Figure 4.1 depicts the sample system used for the real-time gas analyzer tests. The gas sample was continuously pulled through the probe and transported, via heat-traced Teflon® tubing, to a heated head pump and into the FTIR then to a stainless steel minimum-contact condenser designed to dry the sample. Transportation of the sample, through Teflon® tubing, continued into the sample manifold within the mobile laboratory via a stainless steel/Teflon® diaphragm pump. From the manifold, the sample was partitioned to the real-time analyzers through rotameters that controlled the flow rate of the sample. Exhaust samples were routed to the wet based analyzer prior to gas conditioning.

Figure 4.1 shows that the sample system was also equipped with a separate path through which a calibration gas could be delivered to the probe and back through the entire sampling system. This allowed for convenient performance of system bias checks as required by the testing methods.

All instruments were housed in an air-conditioned, trailer-mounted mobile laboratory. Gaseous calibration standards were provided in aluminum cylinders with the concentrations certified by the vendor. EPA Protocol No. 1 was used to determine the cylinder concentrations where applicable (i.e. NOx calibration gases).

Table 4.2 provides a description of the analyzers used for the instrument portion of the tests. All data from the continuous monitoring instruments were recorded on a Logic Beach Portable Data Logging System Hyperlogger which retrieves calibrated electronic data from each instrument every one second and reports an average of the collected data every 30 seconds. For target compounds measured with the Fourier transform infrared (FTIR) spectrometer, interferograms consisting of 27 co-added scans were recorded continuously during the test periods, and provided approximately 30-second average concentrations. Spectral data was analyzed by the MKS MG2000 software. Data records can be found in Appendix A and B of this report.

Three test runs of approximately 60 minutes each were conducted on the Caterpillar, G3306 TA, Unit #805640, Serial #R6S02051 in the "as found" operating condition for NOx, CO, THC/VOC, and O_2.

The stack gas analysis for O_2 concentrations was performed in accordance with procedures set forth in EPA Method 3A. The O_2 analyzer uses a paramagnetic cell detector and the CO_2 analyzer uses a continuous nondispersive infrared analyzer.

EPA Method 7E was used to determine concentrations of NOx. A chemiluminescent analyzer was used to determine the nitrogen oxides concentration in the gas stream. A NO_2 in nitrogen certified gas cylinder was used to verify at least a 90 percent NO_2 conversion on the day of the test.

CO emission concentrations were quantified in accordance with procedures set forth in EPA Method 10. A continuous nondispersive infrared (NDIR) analyzer was used for this purpose.

An MKS Instruments - MultiGas™ Fourier Transform Infrared (FTIR) spectrometer, or equivalent, was used for CO_2, H_2O, THC, VOC, HCHO, methane and ethane analysis per EPA Method 320. The FTIR spectrometer spectral resolution was 0.5 cm^{-1}. The system employed a silicon carbide infrared source at 1200°C, a helium neon reference laser, beam splitters, potassium bromide (KBr) cell window, front-surface optical transfer mirrors, and multi-pass absorption cells. MCT detectors were used and cooled with liquid nitrogen in order to maintain a constant temperature of 77 Kelvin. The approximately 5.11-meter multi-pass path cells incorporated aspheric, aberration-correcting mirrors to increase the optical throughput and the detection sensitivity. Transducers and

thermocouples were connected directly to the insulated sample cells that provide the pressure and temperatures of the sample streams. During testing, the temperature of the absorption cells was set at 191°C. Elevated temperature prevented gas condensation within the cell and minimized compound adhesion to the cell walls and mirrors. The volume of the absorption cell was 0.5 liters, so at a sample gas flow rate of 4.0 liters per minute, the sample gas in the cell is refreshed approximately four times each minute. Interferograms consisting of 28 co-added scans were recorded continuously during the test periods, and provided approximately 30-second average concentrations.

THC concentration in the flue gas was quantified by the summation of an exponential expression of methane, ethane, ethylene, acetylene, propane, propylene, butane, and hexane. The THC calculation includes FID response factors as recommended by Society of Automotive Engineers (SAE) Paper No. 770141, "Optimization of Flame Ionization Detector for Determination of Hydrocarbon in Diluted Automotive Exhausts"; author Glenn D. Reschke. VOC concentration in the flue gas included all components minus the summation of methane and ethane.

TABLE 4.2
ANALYTICAL INSTRUMENTATION

Parameter	Manufacturer and Model	Range	Sensitivity	Detection Principle
NOx	THERMO 42C	User may select up to 5,000 ppm	0.1 ppm	Thermal reduction of NO_2 to NO. Chemiluminescence of reaction of NO with O_3. Detection by PMT. Inherently linear for listed ranges.
CO	THERMO 48C	User may select up to 10,000 ppm	0.1 ppm	Infrared absorption, gas filter correlation detector, microprocessor based linearization.
THC, VOC, Methane, Ethane, CO_2, H_2O	MKS 2030	User may select from multiple ranges	0.1 ppm	Fourier Transform Infrared – FTIR
O_2	SERVOMEX 1440	0-25%	0.1%	Paramagnetic cell, inherently linear.

COPYRIGHT © 2008 AIR HYGIENE INTERNATIONAL, INC.

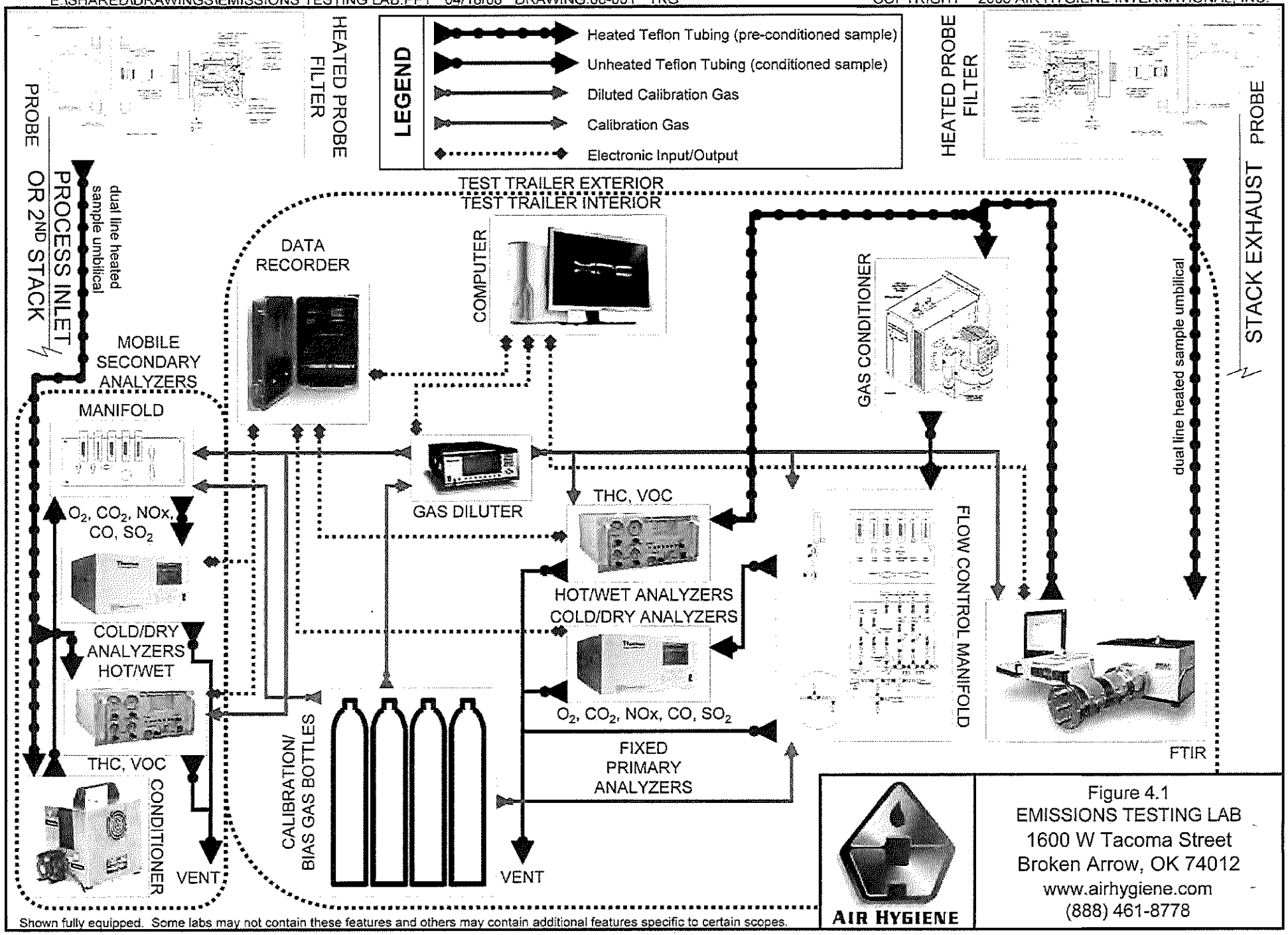

Shown fully equipped. Some labs may not contain these features and others may contain additional features specific to certain scopes.

AIR HYGIENE

Figure 4.1
EMISSIONS TESTING LAB
1600 W Tacoma Street
Broken Arrow, OK 74012
www.airhygiene.com
(888) 461-8778

APPENDIX A

TEST RESULTS AND CALCULATIONS

EMISSION CALCULATIONS SUMMARY TABLES

Company: XTO ENERGY, INC.
Engine Tested: Caterpillar, G3306 TA, Unit #805640
Engine Serial #: R6S02051

Date: February 19, 2015
Location: Green 1-1H

Stack Gas Flow Rate: Method 19

Test #	Brake Horsepower	O_2 Conc. (%)	Fuel Heating [HHV] Value (Btu/SCF)	F Factor-Dry Oxy. (DSCFex/MMBtu)	Fuel Flow (SCF/hr)	Stack Flow (SCF/hr)
1	185	0.40	1,247	8,741.22	875	9,723
2	186	-0.02	1,247	8,741.22	871	9,480
3	186	0.01	1,247	8,741.22	871	9,496
Average	**186**	**0.13**	**1,247**	**8,741.22**	**872**	**9,566**

NOx Mass Emission Rate

Test #	Brake Horsepower	NOx Conc. (ppmvd)	MW	E (g/hp*hr)	E (lb/hr)	E (ton/yr)
1	185	39.53	46.01	0.11	0.05	0.20
2	186	45.33	46.01	0.13	0.05	0.22
3	186	16.65	46.01	0.05	0.02	0.08
Average	**186**	**33.84**	**46.01**	**0.09**	**0.04**	**0.17**

NOx @15%O_2 Concentration

Test #	Brake Horsepower	NOx Conc. (ppmvd)	NOx @15%O_2 (ppmvd)
1	185	39.53	11.38
2	186	45.33	12.78
3	186	16.65	4.70
Average	**186**	**33.84**	**9.62**

CO Mass Emission Rate

Test #	Brake Horsepower	CO Conc. (ppmvd)	MW	E (g/hp*hr)	E (lb/hr)	E (ton/yr)
1	185	227.34	28.00	0.39	0.16	0.70
2	186	240.86	28.00	0.40	0.17	0.73
3	186	135.67	28.00	0.23	0.09	0.41
Average	**186**	**201.29**	**28.00**	**0.34**	**0.14**	**0.61**

CO @15%O_2 Concentration

Test #	Brake Horsepower	CO Conc. (ppmvd)	CO @15%O_2 (ppmvd)
1	185	227.34	65.43
2	186	240.86	67.92
3	186	135.67	38.32
Average	**186**	**201.29**	**57.23**

VOC Mass Emission Rate

Test #	Brake Horsepower	THC Conc. (ppmvd)	MW	E (g/hp*hr)	E (lb/hr)	E (ton/yr)
1	185	5.38	44.00	0.01	0.01	0.03
2	186	4.61	44.00	0.01	0.00	0.02
3	186	3.69	44.00	0.01	0.00	0.02
Average	**186**	**4.56**	**44.00**	**0.01**	**0.00**	**0.02**

VOC @15%O_2 Concentration

Test #	Brake Horsepower	THC Conc. (ppmvd)	VOC @15%O_2 (ppmvd)
1	185	5.38	1.55
2	186	4.61	1.30
3	186	3.69	1.04
Average	**186**	**4.56**	**1.30**

Calculations, Formulas, and Constants

The following information supports the spreadsheets for this testing project.

Given Data:

Ideal Gas Conversion Factor = 385.23 SCF/lb-mol at 68 deg F & 14.696 psia

Fuel Heating Value is based upon Air Hygiene's fuel gas calculation sheet. All calculations are based upon a correction to 68 deg F & 14.696 psia

High Heating Values (HHV) are used for the Fuel Heating Value, F-Factor, and Fuel Flow Data per EPA requirements.

ASTM D 3588

Molecular Weight of NOx (lb/lb-mole) = 46.01
Molecular Weight of CO (lb/lb-mole) = 28.00
Molecular Weight of SO_2 (lb/lb-mole) = 64.00
Molecular Weight of THC (propane) (lb/lb-mole) = 44.00
Molecular Weight of VOC (methane) (lb/lb-mole) = 16.00
Molecular Weight of NH_3 (lb/lb-mole) = 17.03
Molecular Weight of HCHO (lb/lb-mole) = 30.03

40CFR60, App. A., RM 19, Table 19-1

Conversion Constant for NOx = 0.0000001194351
Conversion Constant for CO = 0.0000000726839
Conversion Constant for SO_2 = 0.0000001661345
Conversion Constant for THC = 0.0000001142175
Conversion Constant for VOC (methane) = 0.0000000415336
Conversion Constant for NH_3 = 0.0000000442074
Conversion Constant for HCHO = 0.0000000779534
NOTE: units are lb/ppm*ft^3

Formulas:

1. Corrected Raw Average (C_{Gas}), 40CFR60, App. A, RM 7E, Eq. 7E-5 (08/15/06)

$$C_{Gas} = (C_{Avg} - C_o) \times \left(\frac{C_M}{C_M - C_o} \right)$$

2. Correction to % O_2, 40CFR60, App. A, RM 20, Eq. 20-5 (11/26/02)

$$C_{adj} = C_{Gas(Target)} \times \left(\frac{20.9\% - AdjFactor}{20.9\% - C_{Gas(O2)}} \right)$$

3. Correction to % O_2 and ISO Conditions

$$C_{ISO} = C_{Adj} \times \sqrt{\frac{P_r}{P_o}} \times e^{(19 \times (H_o - 0.00633))} \times \left(\frac{288}{T_a} \right)^{1.53}$$

4. Method 19 stack exhaust flow (scfh)

$$Q_S = \left(\frac{FFactor \times Q_f \times HHV}{1{,}000{,}000} \right) \times \left(\frac{20.9\%}{20.9\% - C_{Gas(O2)}} \right)$$

5. Emission Rate in lb/hr

$$E_{lb/hr} = \frac{C_{Gas}}{10^6} \times \frac{Q_S \times MW}{G}$$

6. Emission Rate in tons per year

$$E_{ton/yr} = \frac{E_{lb/hr} \times hr_{year}}{2000}$$

7. Emission Concentration in lb/MMBtu (O_2 based)

$$E_{lb/MMBtu} = \frac{C_{Gas} \times F_d Factor \times Conv_C \times 20.9\%}{20.9\% - C_{Gas(O2)}}$$

8. Emission Concentration in g/hp*hr

$$E_{g/hp\text{-}hr} = \frac{E_{lb/hr} \times 453.6}{mw \times 1341.022} \; or \; \frac{E_{lb/hr} \times 453.6}{hp}$$

EXAMPLE CALCULATIONS (FFACTOR)

RM 19, (02-27-14), 2.0 Summary of Method, 2.1 Emission Rates. Oxygen (O_2) or carbon dioxide (CO_2) concentrations and appropriate F factors (ratios of combustion gas volumes to heat inputs) are used to calculate pollutant emission rates from pollutant concentrations.

RM 19, (02-27-14), 12.2 Emission Rates of PM, SO_2, and NOx. Select from the following sections the applicable procedure to compute the PM, SO_2, or NOx emission rate (E) in lb/MMBtu. The pollutant concentration must be in lb/scf and the F factor must be in scf/MMBtu. If the pollutant concentration (C) is not in the appropriate units, use Table 19–1 in Section 17.0 to make the proper conversion. An F factor is the ratio of the gas volume of the products of combustion to the heat content of the fuel. The dry F factor (F_d) includes all components of combustion less water, the wet F factor (F_w) includes all components of combustion, and the carbon F factor (F_c) includes only carbon dioxide.

Mark's Std Hdbk, 10th ed.,pg 4-26
High Heat Value Dry (HHV_{dry}), calc for Methane (single component for the fuel gas)

$$HHV_{dry}(Btu/SCF) = \left[\left(\frac{M_{\%}}{100}\right) \times GCM\right]$$

$$HHV_{dry} = \frac{66.67\ \%}{100.00} \times \frac{994.85\ Btu}{SCF} = \frac{663.23\ Btu}{SCF}$$

Mark's Std Hdbk, 10th ed., pg 4-26
Low Heat Value Dry (LHV_{dry}), calc for Methane (single component for the fuel gas)

$$LHV_{dry}(Btu/SCF) = \left[\left(\frac{M_{\%}}{100}\right) \times NCM\right]$$

$$LHV_{dry} = \frac{66.67\ \%}{100.00} \times \frac{895.75\ Btu}{SCF} = \frac{597.17\ Btu}{SCF}$$

Civil Eng. Ref. Man.,7th Ed.,pg 14-9/GPA Ref. Bulletin 181-86, App. C
High Heat Value Wet (HHV_{wet}), calc for entire sample (all components of the fuel gas)

$$HHV_{wet}(Btu/SCF) = \frac{HHV_{dry}}{W/D.factor}$$

$$HHV_{wet} = \frac{1{,}367.44\ Btu/SCF}{1.0236} = 1{,}335.91\ Btu/SCF$$

Civil Eng. Ref. Man.,7th Ed.,pg 14-9/GPA Ref. Bulletin 181-86, App. C
Low Heat Value Wet (LHV_{wet}), calc for entire sample (all components of the fuel gas)

$$LHV_{wet}(Btu/SCF) = \frac{LHV_{dry}}{W/D.factor}$$

$$LHV_{wet} = \frac{1{,}245.15\ Btu/SCF}{1.0236} = 1{,}216.44\ Btu/SCF$$

Lbs Component per Lb-Mol of Gas (CM), calc for Methane (single component for the fuel gas)

$$CM(lb/lb-mol) = \left[\left(\frac{M_{\%}}{100}\right) \times MW\right]$$

$$CM = \frac{66.67\ \%}{100.00} \times \frac{16.04\ lb}{lb\text{-}mol} = 10.70\ lb/lb\text{-}mol$$

ASTM D 3588
Fuel Molecular Weight (MW_{Fuel})

$$MW_{Fuel}(lb/lb\cdot mol) = \left[\sum (CM)\right]$$

MW_{Fuel} = 10.70 lb/lb-mol
+ 3.47 lb/lb-mol
+ etc. = 24.858 lb/lb-mol

Btu per Lb of Gas Gross (**GCV**)

$$GCV\ (Btu/lb) = \left[\frac{HHV_{dry} \times G}{MW_{Fuel}}\right]$$

$$GCV = \frac{1{,}367.44\ Btu/SCF \times 385.23\ ft^3/lbmol}{24.858\ lb/lb\text{-}mol} = 21{,}191.53\ Btu/lb$$

ASTM D 3588 (SG)
Specific Gravity

$$SG = \left[\frac{MW_{Fuel}}{MW_{AIR}}\right]$$

$$SG = \frac{24.86\ lb/lb\text{-}mol}{28.96\ lb/lb\text{-}mol} = 0.8583$$

Btu per Lb of Gas Net (**NCV**)

$$NCV\ (Btu/lb) = \left[\frac{LHV_{dry} \times G}{MW_{Fuel}}\right]$$

$$NCV = \frac{1{,}245.15\ Btu/SCF \times 385.23\ ft^3/lbmol}{24.858\ lb/lb\text{-}mol} = 19{,}296.31\ Btu/lb$$

Weight Percent of Component ($C_{\%}$), methane

$$C_{\%}(\%) = \left[\left(\frac{CM}{MW_{Fuel}}\right) \times 100\right]$$

$$C_{\%} = \frac{10.70\ lb/lb\text{-}mol}{24.86\ lb/lb\text{-}mol} \times 100 = 43.03\ \%$$

Weight Percent of Volatile Organic Compounds ($VOC_{\%}$)

$$VOC_{\%}(\%) = \left[\sum_{C_3H_8}^{C_8H_{18}} M_{\%}\right]$$

$VOC_{\%}$ = 16.00 % + 1.48 % + 7.42 % + etc. = 36.51 %

RM 19, (02-27-14), 12.3.2 Determined **F Factors**. If the fuel burned is not listed in Table 19–2 or if the owner or operator chooses to determine an F factor rather than use the values in Table 19–2, use the procedure below: 12.3.2.1 Equations. Use the eq

RM 19, (02-27-14), 12.1 Nomenclature

K (scf/lb)/%

H	3.64
C	1.53
S	0.57
N_2	0.14
O_2	0.46

$$F_d = \frac{K(K_{hd}\%H + K_c\%C + K_s\%S + K_n\%N - K_o\%O)}{GCV} \qquad \text{Eq. 19-13}$$

$$F_d = \frac{10^6 Btu}{MMBtu} \times \left[\frac{3.64\ SCF}{lb\cdot\%} \times 20.01\ \% + \frac{1.53\ SCF}{lb\cdot\%} \times 73.85\ \% + \frac{0.57\ SCF}{lb\cdot\%} \times 0.00\ \% + \frac{0.14\ SCF}{lb\cdot\%} \times 5.17\ \% - \frac{0.46\ SCF}{lb\cdot\%} \times 0.97\ \%\right] \times \frac{lb}{21{,}191.53\ Btu} = \frac{8{,}781.91\ SCF}{MMBtu}$$

Note: Lack of significant figures may cause rounding errors between actual calculations and example calculations.

EXAMPLE CALCULATIONS (Methane and Ethane subtraction from THC to determine VOC)

VOC (as propane)

Using a THC analyzer calibrated with propane and an FTIR, GC, or other type of analyzer that reads methane and ethane on a methane and ethane basis, respecively, first convert the methane to a propane equivalent by dividing the number by three, then convert the ethane to a propane equivalent by multiplying the number by two and then dividing by three. Once all concentrations are in equivalent units, subtract the methane (as propane) and ethane (as propane) from the THC concentration.

$$VOC\,(ppm) = C_{THC\,(propane)} - \left(\frac{C_{CH_4(methane)}}{3}\right)_{(propane)} \times 1.1 - \left(\frac{C_{C_2H_6(ethane)} \times 2}{3}\right)_{(propane)}$$

$$\text{VOC (ppm)} = 79.74\ \text{ppm} - \frac{185.11\ \text{ppm}}{3} \times 1.1 - \frac{11.08\ \text{ppm} \times 2}{3} = 4.48\ \text{ppm}$$

EXAMPLE CALCULATIONS (INFORMATION)

Specific Humidity (RH_{sp})

Note: RHsp (gr/lb) calculated using temperature, relative humidity, and barometric pressure with psychrometric chart, psychrometric calculator, or built in psychrometric algorithm.

$$RH_{sp}(lb/lb) = \left[\left(\frac{gr}{lb}\right) \times \frac{lb}{7000gr}\right]$$

$$RH_{sp} = \frac{11.30\ \text{gr}}{\text{lb}} \times \frac{1\ \text{lb}}{7000\ \text{gr}} = 0.001614\ \frac{\text{lb}\ H_2O}{\text{lb Air}}$$

EXAMPLE CALCULATIONS (CALIBRATION)

Analyzer Calibration Error

RM 7E, (02-27-14), 12.2 Analyzer Calibration Error. For non-dilution systems, use Equation 7E-1 to calculate the analyzer calibration error for the low-, mid-, and high-level calibration gases. (calc for NOx analyzer mid gas, if applicable)

$$ACE = \left(\frac{C_{Dir} - C_V}{CS}\right) \times 100 \qquad \text{Eq. 7E-1}$$

$$ACE = \frac{54.44\ \text{ppm} - 55.70\ \text{ppm}}{109.00\ \text{ppm}} \times 100 = -1.16\ \%$$

EXAMPLE CALCULATIONS (BIAS, DRIFT, AND CORRECTED RAW AVERAGE)

System Bias

RM 7E, (02-27-14), 12.3 System Bias. For non-dilution systems, use Equation 7E-2 to calculate the system bias separately for the low-level and upscale calibration gases. (calc for NOx analyzer upscale gas, Run 1 initial bias, if applicable)

$$SB = \left(\frac{C_S - C_{Dir}}{CS}\right) \times 100 \qquad \text{Eq. 7E-2}$$

$$SB = \frac{54.44\ \text{ppm} - 54.44\ \text{ppm}}{109.00\ \text{ppm}} \times 100 = 0.00\ \%$$

Drift Assessment

RM 7E, (02-27-14), 12.5 Drift Assessment. Use Equation 7E-4 to separately calculate the low-level and upscale drift over each test run. (calc for NOx analyzer upscale drift, Run 1, if applicable)

$$D = \left|SB_{final} - SB_i\right| \qquad \text{Eq. 7E-4}$$

$$D = |\ -2.08\ \% - 0.00\ \%\ | = 2.08\ \%$$

Bias Adjusted Average

RM 7E, (02-27-14), 12.6 Effluent Gas Concentration. For each test run, calculate Cavg, the arithmetic average of all valid NOx concentration values (e.g., 1-minute averages). Then adjust the value of Cavg for bias, using Equation 7E-5b. (calc for NOx analyzer, Run 1, if applicable)

$$C_{Gas} = (C_{Avg} - C_O) \times \left(\frac{C_{M4}}{C_M - C_O}\right) \qquad \text{Eq. 7E-5b}$$

$$C_{Gas} = \left(37.79\ \text{ppm} - -0.12\ \text{ppm}\right) \times \left(\frac{55.70\ \text{ppm}}{53.31\ \text{ppm} - -0.12\ \text{ppm}}\right) = 39.53\ \text{ppm}$$

Note: Lack of significant figures may cause rounding errors between actual calculations and example calculations.

EXAMPLE CALCULATIONS (Brake Horsepower)

Brake Horsepower (bhp)

BHP = hp_a x Load

$$BHP = 347\ hp \times \frac{100\ \%}{100} = 347\ hp$$

Available Horsepower (hp_a)

$$hp_a = \text{Rated Horsepower} \times \frac{\text{actual rpm}}{\text{rated rpm}}$$

$$hp_a = 380\ hp \times \frac{1{,}643\ rpm}{1{,}800\ rpm} = 347\ hp$$

Using HHV with Q_f (SCFH)

$$BSFC\ (Btu\ /\ hp \cdot hr) = \frac{HHV \times Q_f}{bhp}$$

$$BSFC = \frac{1{,}367\ Btu}{SCF} \times \frac{582\ SCFH}{358\ hp} = \frac{2{,}220\ Btu}{hp*hr}$$

EXAMPLE CALCULATIONS (RUNS)

Stack Exhaust Flow (Q_S) - RM19

$$Q_S = \left(\frac{FFactor \times Q_f \times HHV}{1{,}000{,}000}\right) \times \left(\frac{20.9\%}{20.9\% - C_{Gas(O2)}}\right)$$

$$Q_S = \frac{8{,}781.91\ SCF}{MMBtu} \times \frac{875.00\ SCF}{hr} \times \frac{1{,}367.44\ Btu}{SCF} \times \frac{MMBtu}{10^6\ Btu} \times \left(\frac{20.90\%}{20.9\% - 0.0\ \%}\right) = 10{,}507.64\ SCFH$$

Moisture Correction

RM 7E, (02-27-14), 12.10 Moisture Correction. Use Equation 7E-10 if your measurements need to be corrected to a dry basis. (calc for NOx analyzer, Run 1, if applicable) Note: Calculations may not match as Run 1 results are typically also bias adjusted

$$C_{W} = C_D \times (1 - B_{WS})$$

$$C_D = \frac{C_W}{1 - B_{WS}}$$ Eq. 7E-10 $$C_D = \frac{32.91\ ppmvw}{1 - 0.17} = 39.53\ ppmvd$$ or inversely, $$C_W = 39.53\ ppmvd \times \left(1 - 0.17\right) = 32.91\ ppmvw$$

Diluent-Corrected Pollutant Concentration, O_2 Based

RM 20, (11-26-02), 7.3.1 Correction of Pollutant Concentration Using O_2 Concentration. Calculate the O_2 corrected pollutant concentration, as follows: (calc for NOx gas, Run 1, if applicable) [now contained in applicable Subpart]

$$C_{adj} = C_{Gas(Target)} \times \left(\frac{20.9\% - AdjFactor}{20.9\% - C_{Gas(O2)}}\right)$$ Eq. 20-4 $$C_{adj} = 39.53\ ppm \times \left(\frac{20.9\% - 15.00\ \%}{20.9\% - 0.00\ \%}\right) = 11.16\ ppm@15\%O_2$$

7.2 CO_2 Correction Factor. If pollutant concentrations are to be corrected to percent O_2 and CO_2 concentration is measured in lieu of O_2 concentration measurement, a CO_2 correction factor is needed. Calculate the CO_2 correction factor as follows: 7.2.1 Calculate the fuel specific F_o, as follows: 7.2.2. Calculate the CO_2 correction factor for correcting measurement data to percent oxygen, as follows:

Eq. 20-2

$$F_0 = \frac{0.209\ F_d}{F_c}$$ $$F_0 = \frac{0.209 \times 8{,}781.91\ SCF/MMBtu}{1{,}118.61\ SCF/MMBtu} = 1.64$$

Eq. 20-3

$$X_{CO2} = \frac{20.9\% - AdjFactor}{F_0}$$ $$X_{CO2} = \frac{20.9\% - 15.00\ \%}{1.64} = 3.60\ \%$$

Note: Lack of significant figures may cause rounding errors between actual calculations and example calculations.

RM 7E, (08-15-06), 12.1 Nomenclature. The terms used in the equations are defined as follows:

ACE = Analyzer calibration error, percent of calibration span.
B_{WS} = Moisture content of sample gas as measured by Method 4 or other approved method, percent/100.
C_{Avg} = Average unadjusted gas concentration indicated by data recorder for the test run.
C_D = Pollutant concentration adjusted to dry conditions.
C_{Dir} = Measured concentration of a calibration gas (low, mid, or high) when introduced in direct calibration mode.
C_{Gas} = Average effluent gas concentration adjusted for bias.
C_M = Average of initial and final system calibration bias (or 2-point system calibration error) check responses for the upscale calibration gas.
C_{MA} = Actual concentration of the upscale calibration gas, ppmv.
C_O = Average of the initial and final system calibration bias (or 2-point system calibration error) check responses from the low-level (or zero) calibration gas.
C_S = Measured concentration of a calibration gas (low, mid, or high) when introduced in system calibration mode.
C_{SS} = Concentration of NOx measured in the spiked sample.
C_{Spike} = Concentration of NOx in the undiluted spike gas.
C_{Calc} = Calculated concentration of NOx in the spike gas diluted in the sample.
C_V = Manufacturer certified concentration of a calibration gas (low, mid, or high).
C_W = Pollutant concentration measured under moist sample conditions, wet basis.
CS = Calibration span.
D = Drift assessment, percent of calibration span.
E_p = The predicted response for the low-level and mid-level gases based on a linear response line between the zero and high-level response.
Eff_{NO2} = NO_2 to NO converter efficiency, percent.
H = High calibration gas, designator.
L = Low calibration gas, designator.
M = Mid calibration gas, designator.
NOFinal = The average NO concentration observed with the analyzer in the NO mode during the converter efficiency test in Section 16.2.2.
NOxCorr = The NOx concentration corrected for the converter efficiency.
NOxFinal = The final NOx concentration observed during the converter efficiency test in Section 16.2.2.
NOxPeak = The highest NOx concentration observed during the converter efficiency test in Section 16.2.2.
Q_{Spike} = Flow rate of spike gas introduced in system calibration mode, L/min.
Q_{Total} = Total sample flow rate during the spike test, L/min.
R = Spike recovery, percent.
SB = System bias, percent of calibration span.
SB_i = Pre-run system bias, percent of calibration span.
SB_f = Post-run system bias, percent of calibration span.
SB / D_{Alt} = Alternative absolute difference criteria to pass bias and/or drift checks.
SCE = System calibration error, percent of calibration span.
SCE_i = Pre-run system calibration error, percent of calibration span.
SCE_{final} = Post-run system calibration error, percent of calibration span.
Z = Zero calibration gas, designator.

40CFR60.355(b)(1), (09-20-06), Nomenclature. The terms used in the equations are defined as follows:

P_r = reference combustor inlet absolute pressure at 101.3 kilopascals ambient pressure, mm Hg
P_o = observed combustor inlet absolute pressure at test, mm Hg
H_o = observed humidity of ambient air, g H_2O/g air
e = transcendental constant, 2.718
T_a = ambient temperature, K

Small Engine and FTIR Nomenclature. The terms used in the equations are defined as follows:

bhp = brake horsepower
hp = horsepower
Q_{sys} = system flow (lpm)
Q_m = matrix spike flow (lpm)

RM 19, (07-29-06), 12.1 Nomenclature. The terms used in the equations are defined as follows:

AdjFactor = Percent oxygen or carbon dioxide adjustment applied to a target pollutant
B_{wa} = Moisture fraction of ambient air, percent.
Btu = British thermal unit
$\%_C$ = Concentration of carbon from an ultimate analysis of fuel, weight percent.
$\%_{CO2d}$, $\%_{CO2w}$ = Concentration of carbon dioxide on a dry and wet basis, respectively, percent.
CIP / CDP = Combustor inlet pressure / compressor discharge pressure (mm Hg); note, some manufactures reference as PCD.
E = Pollutant emission rate, ng/J (lb/million Btu).
E_a = Average pollutant rate for the specified performance test period, ng/J (lb/million Btu).
E_{ao}, E_{ai} = Average pollutant rate of the control device, outlet and inlet, respectively, for the performance test period, ng/J (lb/million Btu).
E_{bi} = Pollutant rate from the steam generating unit, ng/J (lb/million Btu).
E_{bo} = Pollutant emission rate from the steam generating unit, ng/J (lb/million Btu).
E_{ci} = Pollutant rate in combined effluent, ng/J (lb/million Btu).
E_{co} = Pollutant emission rate in combined effluent, ng/J (lb/million Btu).
E_d = Average pollutant rate for each sampling period (e.g.,24-hr Method 6B sample or 24-hr fuel sample) or for each fuel lot (e.g., amount of fuel bunkered), ng/J (lb/million Btu)
E_{di} = Average inlet SO_2 rate for each sampling period d, ng/J (lb/million Btu).
E_g = Pollutant rate from gas turbine, ng/J (lb/million Btu).
E_{ga} = Daily geometric average pollutant rate, ng/J (lbs/million Btu) or ppm corrected to 7 percent O_2.
E_{jo},E_{ji} = Matched pair hourly arithmetic average pollutant rate, outlet and inlet, respectively, ng/J (lb/million Btu) or ppm corrected to 7 percent O_2.
E_h = Hourly average pollutant, ng/J (lb/million Btu).
E_{hj} = Hourly arithmetic average pollutant rate for hour "j," ng/J (lb/million Btu) or ppm corrected to 7 percent O_2.
EXP = Natural logarithmic base (2.718) raised to the value enclosed by brackets.
Fc = Ratio of the volume of carbon dioxide produced to the gross calorific value of the fuel from Method 19
F_d, F_w, F_c = Volumes of combustion components per unit of heat content, scm/J (scf/million Btu).
ft^3 = cubic feet
G = ideal gas conversion factor
(385.23 SCF/lb-mol at 68 deg F & 14.696 psia)
GCM = gross Btu per SCF (constant, compound based)
GCV = Gross calorific value of the fuel consistent with the ultimate analysis, kJ/kg (Btu/lb).
GCV_p, GCV_r = Gross calorific value for the product and raw fuel lots, respectively, dry basis, kJ/kg (Btu/lb).
$\%_H$ = Concentration of hydrogen from an ultimate analysis of fuel, weight percent.
H_b = Heat input rate to the steam generating unit from fuels fired in the steam generating unit, J/hr (million Btu/hr).
H_g = Heat input rate to gas turbine from all fuels fired in the gas turbine, J/hr (million Btu/hr).
$\%_{H2O}$ = Concentration of water from an ultimate analysis of fuel, weight percent.
H_r = Total numbers of hours in the performance test period (e.g., 720 hours for 30-day performance test period).
K = volume of combustion component per pound of component (constant)
K = Conversion factor, 10^{-5} (kJ/J)/(%) [10^9 Btu/million Btu].
K_c = (9.57 scm/kg)/% [(1.53 scf/lb)/%].
K_{co} = (2.0 scm/kg)/% [(0.321 scf/lb)/%].
K_{hd} = (22.7 scm/kg)/% [(3.64 scf/lb)/%].
K_{hw} = (34.74 scm/kg)/% [(5.57 scf/lb)/%].
K_n = (0.86 scm/kg)/% [(0.14 scf/lb)/%].
K_o = (2.85 scm/kg)/% [(0.46 scf/lb)/%].
K_s = (3.54 scm/kg)/% [(0.57 scf/lb)/%].
K_{sulfur} = $2x10^4$ Btu/wt%-MMBtu
K_w = (1.30 scm/kg)/% [(0.21 scf/lb)/%].
lb = pound
ln = Natural log of indicated value.
L_p,L_r = Weight of the product and raw fuel lots, respectively, metric ton (ton).
$\%_N$ = Concentration of nitrogen from an ultimate analysis of fuel, weight percent.
M_w = mole percent
mol = mole
MW = molecular weight (lb/lb-mol)
MW_{AIR} = molecular weight of air (28.9625 lb/lb-mole)[1]
NCM = net Btu per SCF (constant based on compound)
$\%_O$ = Concentration of oxygen from an ultimate analysis of fuel, weight percent.
$\%_{O2d}$, $\%_{O2w}$ = Concentration of oxygen on a dry and wet basis, respectively, percent.
P_B = barometirc pressure, in Hg
P_s = Potential SO2 emissions, percent.
$\%_S$ = Sulfur content of as-fired fuel lot, dry basis, weight percent.
S_e = Standard deviation of the hourly average pollutant rates for each performance test period, ng/J (lb/million Btu).
$\%_{Sf}$ = Concentration of sulfur from an ultimate analysis of fuel, weight percent.
S(wt%) = weight percent of sulfur, per lab analysis by appropriate ASTM standard
S_i = Standard deviation of the hourly average inlet pollutant rates for each performance test period, ng/J (lb/million Btu).
S_o = Standard deviation of the hourly average emission rates for each performance test period, ng/J (lb/million Btu).
$\%S_p$, $\%S_r$ = Sulfur content of the product and raw fuel lots respectively, dry basis, weight percent.
SCF = standard cubic feet
SH = specific humidity, pounds of water per pound of air
$t_{0.95}$ = Values shown in Table 19-3 for the indicated number of data points n.
T_{amb} = ambient temperature, °F
W/D Factor = 1.0236 = conv. at 14.696 psia and
68 deg F (ref. Civil Eng. Ref. Manual, 7th Ed.)
X_{CO2}=CO_2 Correction factor, percent.
X_k = Fraction of total heat input from each type of fuel k.

APPENDIX B

EMISSION DATA RECORDS

XTO ENERGY, INC.

Air Permit Number:	2014-0283-NOI
Plant Name or Location:	Green 1-1H
Date:	February 19, 2015
Project Number:	xto-15-multi.ok-eng#3
Manufacturer & Equipment:	Caterpillar
Model:	G3306 TA
Serial Number:	R6S02051
Unit Number:	805640
Test Load:	≥ 90%
Tester(s) / Test Unit(s):	MB/JM

		RUN		
	UNITS	**1-1**	**1-2**	**1-3**
Start Time	hh:mm:ss	08:35:01	09:46:01	11:12:01
End Time	hh:mm:ss	09:34:31	10:45:31	12:11:31
Bar. Pressure	in. Hg	30.49	30.39	30.37
Amb. Temp.	°F	33	37	39
Rel. Humidity	%	42	50	50
Spec. Humidity	lb water / lb air	0.001614	0.002263	0.002450
Engine Fuel Flow	SCFH	875	871	871
Stack Moisture	% Method 4 or 320	16.75	17.51	17.27
Brake Horsepower	bhp	185	186	186
Rated Horsepower	hp_r	203	203	203
Rated Engine Speed	rpm	1,800	1,800	1,800
Available Horsepower	hp_a	185	186	186
Engine Load	%	100	100	100
Engine Speed	rpm	1,643	1,650	1,651
Air Manifold Pressure	psi	15.2	15.1	15.3
Air Manifold Temp	°F	82	82	83
Suction Pressure	psi	40.1	40.3	40.0
Discharge Pressure	psi	979	965	969
Fuel Flow	scfm	21.0	20.9	20.9

-Brake horsepower based on available horsepower multiplied by load.
-Available horsepower based on the engine speed ratio (actual vs rated), see Engine Spec Sheet, Appendix B.
-Load available from engine panel and/or site personnel.

Comp&RATA&Eng-AHI v6.2: January 27, 2015

XTO ENERGY, INC.
February 19, 2015
Caterpillar, G3306 TA, Unit #805640, Serial #R6S02051
Green 1-1H

≥ 90% Load, Run - 1-1

Date/Time (mm/dd/yy hh:mm:ss)	Elapsed Time (seconds)	O_2 (%)	NOx (ppmvd)	CO (ppmvd)	THC (ppmvw)	CH_4 (ppmvw)	C_2H_6 (ppmvw)	H_2O (%)
02/19/15 8:35:01	4320	0.38	29.70	210.61	75.38	177.25	10.09	17.41
02/19/15 8:35:31	4350	0.39	32.43	252.17	78.30	183.42	10.92	13.11
02/19/15 8:36:01	4380	0.37	32.98	166.45	66.93	159.64	7.62	18.93
02/19/15 8:36:31	4410	0.48	33.93	197.68	79.54	180.70	10.53	19.70
02/19/15 8:37:01	4440	0.45	38.72	233.86	84.98	195.00	12.85	17.31
02/19/15 8:37:31	4470	0.42	26.43	151.62	78.68	178.94	10.49	18.19
02/19/15 8:38:01	4500	0.41	30.23	285.17	76.19	181.24	10.26	15.14
02/19/15 8:38:31	4530	0.40	42.56	286.16	78.20	181.55	11.20	19.95
02/19/15 8:39:01	4560	0.39	45.23	311.76	80.62	182.19	11.24	17.47
02/19/15 8:39:31	4590	0.39	33.56	172.12	79.81	188.35	11.35	14.03
02/19/15 8:40:01	4620	0.40	38.87	221.14	79.86	189.30	10.87	14.33
02/19/15 8:40:31	4650	0.41	43.97	194.98	79.81	184.62	11.08	17.67
02/19/15 8:41:01	4680	0.81	37.41	231.14	82.22	186.59	11.45	17.41
02/19/15 8:41:31	4710	0.55	47.66	327.92	80.33	184.52	10.98	15.69
02/19/15 8:42:01	4740	0.40	53.16	284.49	80.72	184.77	12.06	18.47
02/19/15 8:42:31	4770	0.48	38.89	204.84	79.84	187.07	10.65	12.76
02/19/15 8:43:01	4800	0.49	46.88	216.05	82.08	183.07	12.03	20.72
02/19/15 8:43:31	4830	0.60	32.80	170.48	65.41	160.32	8.09	15.36
02/19/15 8:44:01	4860	0.75	29.78	225.64	83.95	191.67	11.70	15.28
02/19/15 8:44:31	4890	0.47	34.34	256.20	73.86	176.20	9.12	14.88
02/19/15 8:45:01	4920	0.51	53.65	151.09	77.93	178.51	10.14	15.93
02/19/15 8:45:31	4950	0.79	19.53	234.55	72.77	171.87	9.25	16.87
02/19/15 8:46:01	4980	0.44	41.26	357.52	77.55	179.20	10.22	18.74
02/19/15 8:46:31	5010	0.66	41.59	190.88	72.17	170.25	8.93	16.71
02/19/15 8:47:01	5040	0.40	31.15	248.22	74.39	176.04	9.53	14.39
02/19/15 8:47:31	5070	0.40	38.85	274.16	72.81	171.51	9.25	17.43
02/19/15 8:48:01	5100	0.39	34.29	173.43	76.57	178.98	9.83	15.76
02/19/15 8:48:31	5130	0.40	28.54	199.98	73.10	172.46	9.46	18.50
02/19/15 8:49:01	5160	0.41	37.74	207.01	81.02	189.58	11.08	14.31
02/19/15 8:49:31	5190	0.41	29.89	227.18	81.14	189.63	11.11	15.05
02/19/15 8:50:01	5220	0.39	36.36	222.92	81.54	185.56	11.25	17.52
02/19/15 8:50:31	5250	0.40	25.52	260.80	81.71	185.46	11.20	17.40
02/19/15 8:51:01	5280	0.38	45.26	278.34	81.03	188.47	11.65	14.65
02/19/15 8:51:31	5310	0.39	12.96	279.33	82.15	187.77	10.73	13.43
02/19/15 8:52:01	5340	0.39	24.12	182.03	78.50	182.06	10.72	13.30
02/19/15 8:52:31	5370	0.39	38.09	136.97	81.38	188.22	10.37	12.93
02/19/15 8:53:01	5400	0.40	16.75	272.30	80.50	178.51	11.06	23.68
02/19/15 8:53:31	5430	0.38	21.62	159.19	80.05	188.83	11.10	14.96
02/19/15 8:54:01	5460	0.39	26.89	182.70	83.29	192.89	11.35	14.90
02/19/15 8:54:31	5490	0.39	32.54	207.98	77.53	181.31	10.58	18.78
02/19/15 8:55:01	5520	0.38	31.12	160.86	75.94	174.96	10.31	21.29
02/19/15 8:55:31	5550	0.39	30.22	235.67	80.47	185.64	11.06	15.48
02/19/15 8:56:01	5580	0.39	33.05	229.10	78.60	180.02	10.26	18.85
02/19/15 8:56:31	5610	0.38	31.38	233.41	84.34	191.44	11.75	16.27
02/19/15 8:57:01	5640	0.49	35.86	190.57	86.40	199.16	12.36	13.20
02/19/15 8:57:31	5670	0.61	35.19	203.76	83.91	191.56	12.01	17.66
02/19/15 8:58:01	5700	0.47	28.69	182.57	81.49	190.64	11.66	17.32
02/19/15 8:58:31	5730	0.39	30.04	298.86	83.75	193.61	11.91	14.36
02/19/15 8:59:01	5760	0.50	25.37	169.05	79.16	186.54	10.81	17.25
02/19/15 8:59:31	5790	0.98	33.67	238.35	78.87	184.90	11.18	17.47
02/19/15 9:00:01	5820	0.84	33.89	228.53	80.56	188.31	11.55	17.13
02/19/15 9:00:31	5850	0.51	38.06	182.41	75.44	178.03	10.49	20.15
02/19/15 9:01:01	5880	0.40	33.29	192.94	77.53	182.32	10.84	17.22
02/19/15 9:01:31	5910	0.39	41.73	244.32	77.67	180.17	10.22	19.35
02/19/15 9:02:01	5940	0.40	40.91	231.29	83.30	190.09	11.56	16.40
02/19/15 9:02:31	5970	0.38	38.06	225.97	82.08	192.53	11.42	15.22
02/19/15 9:03:01	6000	0.38	30.61	187.02	84.04	191.69	11.55	16.66
02/19/15 9:03:31	6030	0.38	43.45	284.62	83.47	187.28	11.73	19.37
02/19/15 9:04:01	6060	0.40	42.32	229.91	82.47	191.02	11.65	14.98
02/19/15 9:04:31	6090	0.40	36.93	167.22	79.40	187.59	11.37	14.53
02/19/15 9:05:01	6120	0.73	30.02	167.20	69.40	165.89	8.38	20.90
02/19/15 9:05:31	6150	0.66	44.48	209.71	87.41	199.84	12.98	15.16
02/19/15 9:06:01	6180	0.54	44.62	229.17	82.75	189.99	11.58	14.91
02/19/15 9:06:31	6210	0.43	45.03	231.71	75.12	179.58	9.76	14.87
02/19/15 9:07:01	6240	0.38	44.56	236.48	79.35	180.63	10.54	18.82
02/19/15 9:07:31	6270	0.41	38.75	188.43	82.88	193.47	12.12	16.19
02/19/15 9:08:01	6300	0.39	25.85	239.63	81.29	190.55	11.90	15.68
02/19/15 9:08:31	6330	0.39	40.08	297.50	81.40	189.48	11.81	17.13
02/19/15 9:09:01	6360	0.40	38.04	141.06	80.01	183.21	10.92	15.97
02/19/15 9:09:31	6390	0.64	32.96	204.03	73.07	172.55	9.45	20.33
02/19/15 9:10:01	6420	0.70	50.61	274.82	82.47	188.07	11.26	17.71
02/19/15 9:10:31	6450	0.73	46.89	266.69	84.97	198.82	12.14	12.82
02/19/15 9:11:01	6480	0.77	48.44	197.77	84.47	191.39	12.37	17.38
02/19/15 9:11:31	6510	0.74	32.76	184.18	77.83	182.23	10.93	17.38

XTO ENERGY, INC.
February 19, 2015
Caterpillar, G3306 TA, Unit #805640, Serial #R6S02051
Green 1-1H

≥ 90% Load, Run - 1-1

Date/Time (mm/dd/yy hh:mm:ss)	Elapsed Time (seconds)	O_2 (%)	NOx (ppmvd)	CO (ppmvd)	THC (ppmvw)	CH_4 (ppmvw)	C_2H_6 (ppmvw)	H_2O (%)
02/19/15 9:12:01	6540	0.66	37.67	223.88	77.15	177.41	10.22	19.18
02/19/15 9:12:31	6570	0.68	40.43	254.67	76.48	181.51	10.53	17.13
02/19/15 9:13:01	6600	0.71	40.07	212.45	85.74	196.43	12.53	14.37
02/19/15 9:13:31	6630	0.48	35.79	181.17	80.56	184.33	10.99	19.15
02/19/15 9:14:01	6660	0.38	36.84	239.14	82.06	193.63	11.71	14.56
02/19/15 9:14:31	6690	0.37	49.69	230.11	79.34	184.33	11.45	18.16
02/19/15 9:15:01	6720	0.39	39.36	250.20	78.49	179.92	10.71	18.45
02/19/15 9:15:31	6750	0.38	44.00	222.34	77.55	180.17	9.83	15.62
02/19/15 9:16:01	6780	0.37	50.58	203.91	80.33	187.35	11.28	14.55
02/19/15 9:16:31	6810	0.38	41.53	262.23	76.36	173.90	10.06	20.72
02/19/15 9:17:01	6840	0.37	41.45	251.48	81.35	186.83	11.66	17.61
02/19/15 9:17:31	6870	0.37	42.75	220.22	82.10	191.92	11.50	14.23
02/19/15 9:18:01	6900	0.36	34.89	212.59	81.42	190.91	11.66	15.72
02/19/15 9:18:31	6930	0.37	46.97	257.54	84.78	194.10	12.17	15.23
02/19/15 9:19:01	6960	0.38	41.94	174.20	80.53	187.76	11.25	15.66
02/19/15 9:19:31	6990	0.38	28.49	210.07	77.23	182.66	10.58	17.51
02/19/15 9:20:01	7020	0.37	36.73	203.03	76.67	178.14	10.80	21.82
02/19/15 9:20:31	7050	0.38	47.71	210.94	81.91	191.92	11.84	16.10
02/19/15 9:21:01	7080	0.44	42.16	242.91	82.08	193.33	12.14	14.49
02/19/15 9:21:31	7110	0.46	44.01	262.76	78.06	179.77	11.17	19.61
02/19/15 9:22:01	7140	0.39	41.24	218.68	83.47	191.34	11.95	14.96
02/19/15 9:22:31	7170	0.44	47.84	204.50	82.55	193.36	12.35	14.35
02/19/15 9:23:01	7200	0.44	28.34	187.17	80.28	187.81	11.57	17.69
02/19/15 9:23:31	7230	0.63	43.29	230.33	83.15	192.34	12.06	16.53
02/19/15 9:24:01	7260	0.56	40.81	203.91	78.23	184.45	10.93	17.35
02/19/15 9:24:31	7290	0.37	43.62	251.02	81.26	189.67	11.37	16.62
02/19/15 9:25:01	7320	0.37	44.67	231.80	79.70	187.16	11.61	17.12
02/19/15 9:25:31	7350	0.57	44.76	229.41	79.95	183.71	11.46	19.05
02/19/15 9:26:01	7380	0.58	43.45	162.90	80.25	189.19	11.68	15.19
02/19/15 9:26:31	7410	0.82	40.52	221.91	81.72	193.38	11.89	13.80
02/19/15 9:27:01	7440	0.83	35.48	204.05	80.53	187.21	11.75	17.39
02/19/15 9:27:31	7470	0.84	46.01	249.46	83.10	191.91	12.27	16.92
02/19/15 9:28:01	7500	0.83	54.41	279.45	77.89	176.12	10.50	23.42
02/19/15 9:28:31	7530	0.86	39.65	246.60	77.61	183.14	10.81	17.77
02/19/15 9:29:01	7560	0.79	56.07	291.26	81.57	190.16	11.76	15.90
02/19/15 9:29:31	7590	0.47	32.01	221.39	79.87	188.78	11.47	14.51
02/19/15 9:30:01	7620	0.38	36.64	234.10	79.32	183.15	11.38	18.73
02/19/15 9:30:31	7650	0.37	40.34	277.19	84.93	196.91	12.74	12.82
02/19/15 9:31:01	7680	0.37	33.83	223.66	82.74	189.27	12.15	16.64
02/19/15 9:31:31	7710	0.37	40.83	225.88	81.27	184.40	11.50	18.71
02/19/15 9:32:01	7740	0.37	31.77	142.52	80.80	185.71	12.21	20.87
02/19/15 9:32:31	7770	0.40	36.66	193.14	75.14	180.66	9.92	15.40
02/19/15 9:33:01	7800	0.37	46.42	235.51	76.19	181.20	10.61	15.49
02/19/15 9:33:31	7830	0.39	36.62	260.00	80.35	187.22	11.53	15.88
02/19/15 9:34:01	7860	0.39	42.86	265.77	82.26	186.38	11.79	16.48
02/19/15 9:34:31	7890	0.38	40.80	245.37	79.13	186.03	11.14	15.78
RAW AVERAGE		**0.48**	**37.79**	**224.12**	**79.74**	**185.11**	**11.08**	**16.75**

		O_2	NOx	CO	THC			
	Serial Number:	INST-22-0008	INST-NX-0028	INST-CO-0030	INST-IR-0002	INST-IR-0002	INST-IR-0002	INST-IR-0002
			(ppmvd)	(ppmvd)				
Bias	Initial Zero	0.09	-0.15	0.29				
	Final Zero	0.07	-0.09	0.41				
	Avg. Zero	0.08	-0.12	0.35				
	Initial UpScale	12.09	54.44	277.60				
	Final UpScale	12.13	52.17	274.50				
	Avg. UpScale	12.11	53.31	276.05				
Upscale Cal Gas		12.02	55.70	280.10				

EMISSIONS DATA	O_2	NOx	CO	THC	CH_4 (as prop)	C_2H_6 (as prop)	VOC (as prop)
Corrected Raw Average (ppm/% dry basis)	0.40	39.53	227.34	95.78	81.53	8.87	5.38
Corrected Raw Average (ppm/% wet basis)	0.32	32.93	189.21	79.74	67.88	7.39	4.48

XTO ENERGY, INC.
February 19, 2015
Caterpillar, G3306 TA, Unit #805640, Serial #R6S02051
Green 1-1H

≥ 90% Load, Run - 1-2

Date/Time (mm/dd/yy hh:mm:ss)	Elapsed Time (seconds)	O_2 (%)	NOx (ppmvd)	CO (ppmvd)	THC (ppmvw)	CH_4 (ppmvw)	C_2H_6 (ppmvw)	H_2O (%)
02/19/15 9:46:01	8580	0.01	39.12	198.08	79.23	185.55	11.45	16.96
02/19/15 9:46:31	8610	0.01	35.81	178.93	80.67	189.37	11.70	16.08
02/19/15 9:47:01	8640	0.01	34.54	218.86	79.53	187.36	11.46	15.52
02/19/15 9:47:31	8670	0.01	45.29	255.76	82.20	193.42	12.29	14.93
02/19/15 9:48:01	8700	0.01	49.03	249.65	83.14	190.73	12.27	15.16
02/19/15 9:48:31	8730	0.01	31.83	210.41	82.56	189.13	12.21	15.48
02/19/15 9:49:01	8760	0.02	45.66	260.53	80.84	187.33	12.33	17.17
02/19/15 9:49:31	8790	0.03	41.88	217.05	74.03	170.48	10.36	21.92
02/19/15 9:50:01	8820	0.04	41.83	285.69	76.76	179.70	10.97	19.76
02/19/15 9:50:31	8850	0.03	34.90	224.39	80.03	186.62	11.65	17.76
02/19/15 9:51:01	8880	0.04	48.87	230.82	79.82	186.70	11.72	16.63
02/19/15 9:51:31	8910	0.07	38.71	232.61	83.22	194.03	12.35	15.73
02/19/15 9:52:01	8940	0.06	34.19	234.37	82.41	190.92	12.09	15.35
02/19/15 9:52:31	8970	0.05	33.30	216.02	80.50	189.22	11.71	15.16
02/19/15 9:53:01	9000	0.05	39.14	250.15	82.24	191.04	11.96	15.00
02/19/15 9:53:31	9030	0.05	47.85	210.72	83.53	194.53	12.66	14.83
02/19/15 9:54:01	9060	0.05	36.04	214.96	79.89	186.17	11.68	18.14
02/19/15 9:54:31	9090	0.04	49.15	230.35	77.48	179.25	11.31	20.31
02/19/15 9:55:01	9120	0.05	52.24	236.63	77.68	181.39	11.46	18.10
02/19/15 9:55:31	9150	0.05	41.91	210.43	78.11	182.09	10.83	16.47
02/19/15 9:56:01	9180	0.04	44.80	229.21	81.05	188.74	12.32	15.99
02/19/15 9:56:31	9210	0.10	42.92	232.57	77.24	182.76	10.96	15.69
02/19/15 9:57:01	9240	0.07	49.81	251.55	82.68	191.45	12.25	16.17
02/19/15 9:57:31	9270	0.07	45.59	251.48	75.82	177.07	10.37	18.87
02/19/15 9:58:01	9300	0.06	49.20	200.14	78.88	182.91	11.95	20.14
02/19/15 9:58:31	9330	0.05	36.42	218.59	77.08	181.56	10.79	17.72
02/19/15 9:59:01	9360	0.05	35.15	245.77	78.12	182.49	11.67	17.09
02/19/15 9:59:31	9390	0.05	38.80	212.36	76.10	179.59	10.26	16.53
02/19/15 10:00:01	9420	0.06	44.77	262.48	82.81	187.53	12.04	16.40
02/19/15 10:00:31	9450	0.04	51.73	264.92	81.22	189.34	12.36	17.03
02/19/15 10:01:01	9480	0.07	47.35	300.40	81.27	185.26	12.46	18.59
02/19/15 10:01:31	9510	0.06	41.43	208.39	75.58	179.05	10.61	18.13
02/19/15 10:02:01	9540	0.06	33.95	227.63	78.74	183.65	11.47	17.81
02/19/15 10:02:31	9570	0.05	60.67	262.23	76.55	180.49	11.00	17.93
02/19/15 10:03:01	9600	0.04	40.28	265.55	80.36	182.87	12.36	18.19
02/19/15 10:03:31	9630	0.04	51.70	323.08	67.65	167.01	8.13	18.15
02/19/15 10:04:01	9660	0.04	50.97	241.24	66.65	162.18	8.48	18.44
02/19/15 10:04:31	9690	0.06	48.22	274.63	70.34	168.91	8.92	18.93
02/19/15 10:05:01	9720	0.07	41.49	226.05	72.49	173.32	9.60	18.23
02/19/15 10:05:31	9750	0.05	45.42	244.24	74.55	177.60	9.81	17.98
02/19/15 10:06:01	9780	0.05	37.72	216.24	77.91	183.97	10.89	17.53
02/19/15 10:06:31	9810	0.05	49.60	253.87	74.47	178.19	10.21	17.29
02/19/15 10:07:01	9840	0.05	42.33	217.29	73.18	175.79	9.88	17.61
02/19/15 10:07:31	9870	0.06	45.79	264.55	73.57	173.81	9.96	18.44
02/19/15 10:08:01	9900	0.06	38.49	282.31	74.54	176.19	10.50	17.79
02/19/15 10:08:31	9930	0.06	46.42	256.62	74.37	175.26	9.89	17.67
02/19/15 10:09:01	9960	0.05	43.46	232.43	83.15	190.89	12.74	17.46
02/19/15 10:09:31	9990	0.05	32.67	280.81	78.51	183.80	11.42	17.68
02/19/15 10:10:01	10020	0.05	43.35	295.33	76.81	181.67	10.92	17.44
02/19/15 10:10:31	10050	0.06	53.93	284.41	79.33	185.58	11.72	17.46
02/19/15 10:11:01	10080	0.06	42.26	200.25	77.21	182.31	11.08	17.27
02/19/15 10:11:31	10110	0.05	45.89	226.34	74.36	176.89	10.25	17.24
02/19/15 10:12:01	10140	0.05	59.84	237.22	77.88	182.33	11.50	17.33
02/19/15 10:12:31	10170	0.06	28.00	191.25	78.42	180.98	11.97	19.27
02/19/15 10:13:01	10200	0.06	29.94	169.33	77.05	180.41	10.67	19.42
02/19/15 10:13:31	10230	0.06	30.76	195.23	80.00	187.69	11.60	18.28
02/19/15 10:14:01	10260	0.06	26.08	192.61	81.06	188.99	12.19	18.15
02/19/15 10:14:31	10290	0.05	30.08	207.14	79.88	187.52	11.84	17.72
02/19/15 10:15:01	10320	0.06	33.39	156.78	81.98	190.35	12.46	17.88
02/19/15 10:15:31	10350	0.05	27.30	161.78	78.19	183.38	11.38	17.46
02/19/15 10:16:01	10380	0.05	36.54	190.41	80.81	186.13	11.55	17.37
02/19/15 10:16:31	10410	0.04	28.69	289.70	77.59	181.83	10.80	17.39
02/19/15 10:17:01	10440	0.05	42.02	265.33	80.64	188.83	12.02	17.20
02/19/15 10:17:31	10470	0.05	45.17	192.35	79.49	186.53	11.58	17.06
02/19/15 10:18:01	10500	0.05	43.82	221.01	82.08	186.99	12.01	18.85
02/19/15 10:18:31	10530	0.04	36.95	172.95	80.13	184.54	11.63	19.34
02/19/15 10:19:01	10560	0.06	41.30	248.90	79.28	183.69	11.87	18.35
02/19/15 10:19:31	10590	0.06	41.38	272.88	80.23	183.24	11.76	17.90
02/19/15 10:20:01	10620	0.05	31.39	249.68	76.82	181.94	11.01	17.05
02/19/15 10:20:31	10650	0.04	45.10	265.26	80.50	187.85	11.67	16.58
02/19/15 10:21:01	10680	0.04	46.62	232.83	82.54	189.10	12.30	16.60
02/19/15 10:21:31	10710	0.06	42.82	278.28	81.11	187.86	11.38	16.67
02/19/15 10:22:01	10740	0.06	45.40	203.54	80.13	186.52	11.39	16.86
02/19/15 10:22:31	10770	0.04	48.74	206.22	76.48	181.01	10.88	17.83

XTO ENERGY, INC.
February 19, 2015
Caterpillar, G3306 TA, Unit #805640, Serial #R6S02051
Green 1-1H

≥ 90% Load, Run - 1-2

Date/Time (mm/dd/yy hh:mm:ss)	Elapsed Time (seconds)	O_2 (%)	NOx (ppmvd)	CO (ppmvd)	THC (ppmvw)	CH_4 (ppmvw)	C_2H_6 (ppmvw)	H_2O (%)
02/19/15 10:23:01	10800	0.04	38.16	243.48	80.46	184.34	11.72	18.19
02/19/15 10:23:31	10830	0.06	45.31	250.82	74.60	175.94	10.58	17.90
02/19/15 10:24:01	10860	0.06	49.34	236.34	81.04	188.92	12.33	17.56
02/19/15 10:24:31	10890	0.05	38.01	246.42	78.52	184.61	11.25	16.88
02/19/15 10:25:01	10920	0.04	47.61	237.64	84.32	194.57	12.27	16.60
02/19/15 10:25:31	10950	0.04	37.26	220.70	79.29	183.53	10.91	16.67
02/19/15 10:26:01	10980	0.04	51.32	258.75	76.11	179.02	10.49	19.25
02/19/15 10:26:31	11010	0.04	45.68	227.70	77.61	181.36	11.13	18.66
02/19/15 10:27:01	11040	0.04	41.87	207.86	77.67	182.75	11.30	17.85
02/19/15 10:27:31	11070	0.05	45.84	242.47	78.67	184.92	11.59	17.39
02/19/15 10:28:01	11100	0.06	49.34	206.59	77.71	182.96	11.10	17.01
02/19/15 10:28:31	11130	0.04	36.86	304.94	83.01	193.30	12.77	17.12
02/19/15 10:29:01	11160	0.03	47.52	268.70	81.31	188.13	11.78	17.36
02/19/15 10:29:31	11190	0.04	58.42	256.03	80.75	184.88	11.41	17.61
02/19/15 10:30:01	11220	0.05	41.81	159.83	79.56	184.85	11.30	17.74
02/19/15 10:30:31	11250	0.05	45.59	219.93	78.50	183.65	11.40	17.39
02/19/15 10:31:01	11280	0.04	55.10	222.59	80.34	184.55	11.71	17.36
02/19/15 10:31:31	11310	0.04	48.67	212.38	79.06	183.37	11.72	17.10
02/19/15 10:32:01	11340	0.04	38.56	263.41	76.76	180.05	10.48	16.77
02/19/15 10:32:31	11370	0.04	39.06	212.14	80.41	185.09	11.55	18.18
02/19/15 10:33:01	11400	0.04	44.51	215.21	78.59	182.71	11.38	18.65
02/19/15 10:33:31	11430	0.05	52.35	211.35	78.22	182.24	11.29	18.05
02/19/15 10:34:01	11460	0.04	39.81	233.43	78.34	182.83	11.43	17.56
02/19/15 10:34:31	11490	0.04	60.58	212.08	77.95	182.92	11.29	17.19
02/19/15 10:35:01	11520	0.05	50.99	220.93	80.42	187.07	11.99	17.13
02/19/15 10:35:31	11550	0.04	46.50	221.52	80.93	188.63	12.10	17.20
02/19/15 10:36:01	11580	0.04	44.50	223.13	82.93	192.00	12.67	17.40
02/19/15 10:36:31	11610	0.04	42.50	210.07	84.04	192.30	12.92	17.39
02/19/15 10:37:01	11640	0.04	44.17	237.11	79.36	185.26	11.59	17.36
02/19/15 10:37:31	11670	0.05	39.48	274.92	82.38	189.05	12.24	17.00
02/19/15 10:38:01	11700	0.05	57.61	339.76	82.94	191.34	13.19	17.25
02/19/15 10:38:31	11730	0.05	55.53	252.39	78.82	184.90	11.66	17.77
02/19/15 10:39:01	11760	0.04	47.74	283.30	79.93	185.96	12.05	17.65
02/19/15 10:39:31	11790	0.04	59.24	301.36	78.89	184.81	11.73	17.25
02/19/15 10:40:01	11820	0.04	52.18	243.04	78.36	182.79	10.85	17.26
02/19/15 10:40:31	11850	0.05	47.55	229.04	76.60	180.36	10.96	17.34
02/19/15 10:41:01	11880	0.05	49.17	202.64	78.30	185.08	11.26	17.40
02/19/15 10:41:31	11910	0.03	48.25	204.09	81.98	186.69	12.09	17.88
02/19/15 10:42:01	11940	0.03	47.68	254.71	82.08	190.37	12.50	17.51
02/19/15 10:42:31	11970	0.04	49.07	311.52	82.14	187.71	12.22	17.47
02/19/15 10:43:01	12000	0.05	46.71	269.81	80.09	186.30	11.88	17.44
02/19/15 10:43:31	12030	0.04	47.40	219.06	80.23	187.43	11.70	17.23
02/19/15 10:44:01	12060	0.05	43.22	247.30	81.39	190.89	12.13	17.17
02/19/15 10:44:31	12090	0.05	51.18	250.29	83.11	187.99	12.41	18.82
02/19/15 10:45:01	12120	0.05	50.01	270.59	77.81	180.92	11.58	19.97
02/19/15 10:45:31	12150	0.05	41.28	237.53	79.35	180.50	11.39	18.91
RAW AVERAGE		**0.05**	**43.71**	**236.62**	**79.00**	**184.26**	**11.45**	**17.51**

		O_2	NOx	CO	THC			
	Serial Number:	INST-22-0008	INST-NX-0028	INST-CO-0030	INST-IR-0002	INST-IR-0002	INST-IR-0002	INST-IR-0002
			(ppmvd)	(ppmvd)				
Bias	Initial Zero	0.07	-0.09	0.41				
	Final Zero	0.07	0.14	0.30				
	Avg. Zero	0.07	0.03	0.36				
	Initial UpScale	12.13	52.17	274.50				
	Final UpScale	12.02	55.24	275.73				
	Avg. UpScale	12.08	53.71	275.12				
Upscale Cal Gas		12.02	55.70	280.10				

EMISSIONS DATA	O_2	NOx	CO	THC	CH_4 (as prop)	C_2H_6 (as prop)	VOC (as prop)
Corrected Raw Average (ppm/% dry basis)	-0.02	45.33	240.86	95.77	81.91	9.26	4.61
Corrected Raw Average (ppm/% wet basis)	-0.03	37.39	198.61	79.00	67.56	7.64	3.80

XTO ENERGY, INC.
February 19, 2015
Caterpillar, G3306 TA, Unit #805640, Serial #R6S02051
Green 1-1H

≥ 90% Load, Run - 1-3

Date/Time (mm/dd/yy hh:mm:ss)	Elapsed Time (seconds)	O_2 (%)	NOx (ppmvd)	CO (ppmvd)	THC (ppmvw)	CH_4 (ppmvw)	C_2H_6 (ppmvw)	H_2O (%)
02/19/15 11:12:01	13740	0.06	26.74	107.06	46.15	118.47	3.67	15.22
02/19/15 11:12:31	13770	0.06	22.42	170.78	44.69	114.84	3.79	15.45
02/19/15 11:13:01	13800	0.06	17.79	181.14	51.86	118.43	4.21	23.26
02/19/15 11:13:31	13830	0.06	13.76	141.46	51.77	131.32	4.87	28.89
02/19/15 11:14:01	13860	0.06	10.43	97.14	55.05	140.09	5.47	18.46
02/19/15 11:14:31	13890	0.06	8.39	76.20	58.44	148.34	5.76	17.43
02/19/15 11:15:01	13920	0.06	7.18	76.80	55.90	141.68	5.88	17.31
02/19/15 11:15:31	13950	0.07	8.25	86.95	60.30	152.44	6.37	17.93
02/19/15 11:16:01	13980	0.07	8.72	83.31	64.12	161.01	7.31	15.91
02/19/15 11:16:31	14010	0.07	7.34	77.80	66.43	165.15	7.34	14.48
02/19/15 11:17:01	14040	0.08	5.91	87.83	61.68	154.60	6.54	13.51
02/19/15 11:17:31	14070	0.08	6.43	106.57	69.54	172.34	8.25	16.83
02/19/15 11:18:01	14100	0.07	6.68	105.41	72.91	178.54	8.88	13.05
02/19/15 11:18:31	14130	0.08	6.02	90.59	70.53	171.00	8.99	12.69
02/19/15 11:19:01	14160	0.08	6.07	85.02	73.01	177.37	9.27	15.11
02/19/15 11:19:31	14190	0.09	6.40	82.93	67.44	159.89	8.34	13.17
02/19/15 11:20:01	14220	0.13	6.62	74.50	66.41	161.72	8.58	22.32
02/19/15 11:20:31	14250	0.15	5.97	70.70	71.14	169.39	9.61	20.81
02/19/15 11:21:01	14280	0.17	6.44	89.60	74.70	177.14	10.24	20.71
02/19/15 11:21:31	14310	0.15	7.44	105.81	76.04	181.98	10.52	18.95
02/19/15 11:22:01	14340	0.11	7.52	94.16	68.83	166.65	8.77	15.28
02/19/15 11:22:31	14370	0.12	6.64	77.83	72.98	178.71	9.09	20.16
02/19/15 11:23:01	14400	0.11	6.03	84.12	72.93	176.59	9.94	15.48
02/19/15 11:23:31	14430	0.10	6.43	99.41	73.02	177.19	9.51	18.15
02/19/15 11:24:01	14460	0.10	6.76	96.37	78.93	182.58	10.58	15.03
02/19/15 11:24:31	14490	0.10	6.18	81.88	78.43	187.73	11.37	16.74
02/19/15 11:25:01	14520	0.11	6.02	77.14	81.15	190.82	11.95	14.15
02/19/15 11:25:31	14550	0.10	6.04	86.23	79.54	187.52	12.00	15.37
02/19/15 11:26:01	14580	0.09	6.40	91.80	80.06	185.33	11.80	14.18
02/19/15 11:26:31	14610	0.09	7.03	83.04	75.27	175.02	10.85	17.68
02/19/15 11:27:01	14640	0.09	7.03	72.68	73.71	177.64	10.03	20.64
02/19/15 11:27:31	14670	0.08	6.59	67.06	79.65	182.64	11.80	18.71
02/19/15 11:28:01	14700	0.08	6.43	82.65	74.74	179.88	10.69	20.69
02/19/15 11:28:31	14730	0.10	7.39	97.47	76.39	180.11	11.00	17.73
02/19/15 11:29:01	14760	0.10	7.72	100.72	81.32	189.72	11.53	17.01
02/19/15 11:29:31	14790	0.09	7.03	86.18	79.61	186.34	11.99	14.91
02/19/15 11:30:01	14820	0.09	6.98	76.21	80.84	188.74	11.70	18.57
02/19/15 11:30:31	14850	0.09	7.42	74.39	78.51	185.13	11.47	15.51
02/19/15 11:31:01	14880	0.08	7.59	80.67	81.73	193.51	11.90	17.09
02/19/15 11:31:31	14910	0.09	6.95	88.71	81.46	190.31	12.53	13.96
02/19/15 11:32:01	14940	0.08	7.03	95.27	82.67	195.50	12.38	17.13
02/19/15 11:32:31	14970	0.08	7.40	93.23	77.25	178.20	11.31	13.93
02/19/15 11:33:01	15000	0.07	8.04	82.88	73.89	172.24	10.76	21.13
02/19/15 11:33:31	15030	0.09	7.87	79.00	76.43	179.97	11.36	21.50
02/19/15 11:34:01	15060	0.12	7.93	75.36	82.66	192.46	13.04	18.21
02/19/15 11:34:31	15090	0.13	8.31	75.97	77.90	176.58	10.82	15.14
02/19/15 11:35:01	15120	0.14	9.00	74.81	84.93	194.03	12.99	21.43
02/19/15 11:35:31	15150	0.19	8.52	73.04	83.18	192.72	12.37	16.18
02/19/15 11:36:01	15180	0.12	8.63	70.67	79.93	186.82	11.69	15.18
02/19/15 11:36:31	15210	0.11	11.14	79.84	81.88	191.47	12.30	17.81
02/19/15 11:37:01	15240	0.11	12.10	90.31	79.27	187.40	11.88	15.03
02/19/15 11:37:31	15270	0.10	10.59	92.52	81.47	190.34	12.49	14.71
02/19/15 11:38:01	15300	0.09	9.87	98.85	83.55	191.66	11.81	14.58
02/19/15 11:38:31	15330	0.11	9.93	97.20	81.35	186.15	11.89	14.74
02/19/15 11:39:01	15360	0.09	10.29	98.02	79.25	185.61	12.04	18.30
02/19/15 11:39:31	15390	0.09	11.37	100.17	78.40	179.75	11.27	18.88
02/19/15 11:40:01	15420	0.09	11.59	121.34	77.87	180.49	11.55	19.48
02/19/15 11:40:31	15450	0.10	10.18	121.67	82.70	193.19	12.72	19.78
02/19/15 11:41:01	15480	0.09	9.44	104.58	79.82	184.37	11.95	15.40
02/19/15 11:41:31	15510	0.09	10.37	92.51	81.57	188.61	12.18	18.65
02/19/15 11:42:01	15540	0.09	11.72	93.56	80.17	184.48	11.93	15.77
02/19/15 11:42:31	15570	0.09	13.87	118.47	75.13	176.88	10.61	17.51
02/19/15 11:43:01	15600	0.08	14.95	146.80	79.52	185.12	12.26	20.34
02/19/15 11:43:31	15630	0.08	14.95	145.98	81.98	188.88	13.02	17.80
02/19/15 11:44:01	15660	0.07	17.02	123.71	65.22	157.34	8.53	19.24
02/19/15 11:44:31	15690	0.09	21.98	121.78	68.07	167.82	8.73	18.36
02/19/15 11:45:01	15720	0.08	22.20	127.29	71.20	173.10	9.57	19.16
02/19/15 11:45:31	15750	0.07	15.14	119.08	73.51	176.35	9.97	17.48
02/19/15 11:46:01	15780	0.07	12.55	118.09	70.29	167.99	9.55	16.80
02/19/15 11:46:31	15810	0.07	16.11	132.70	71.28	169.65	9.48	19.25
02/19/15 11:47:01	15840	0.07	17.57	136.39	76.11	178.54	11.07	17.60
02/19/15 11:47:31	15870	0.07	16.63	141.07	74.83	177.31	10.63	15.79
02/19/15 11:48:01	15900	0.07	17.21	148.57	80.22	188.20	12.11	18.27
02/19/15 11:48:31	15930	0.09	19.80	153.47	81.98	186.24	11.92	15.27

XTO ENERGY, INC.
February 19, 2015
Caterpillar, G3306 TA, Unit #805640, Serial #R6S02051
Green 1-1H

≥ 90% Load, Run - 1-3

Date/Time (mm/dd/yy hh:mm:ss)	Elapsed Time (seconds)	O_2 (%)	NOx (ppmvd)	CO (ppmvd)	THC (ppmvw)	CH_4 (ppmvw)	C_2H_6 (ppmvw)	H_2O (%)
02/19/15 11:49:01	15960	0.07	20.63	162.40	79.18	186.30	11.60	16.57
02/19/15 11:49:31	15990	0.06	19.69	161.19	78.51	183.08	11.64	14.91
02/19/15 11:50:01	16020	0.08	18.64	139.75	79.10	187.26	11.59	17.99
02/19/15 11:50:31	16050	0.11	17.99	116.77	82.84	193.12	12.88	14.74
02/19/15 11:51:01	16080	0.12	18.85	109.44	80.88	192.21	11.91	15.70
02/19/15 11:51:31	16110	0.13	20.69	119.64	77.71	184.33	11.01	13.91
02/19/15 11:52:01	16140	0.11	21.22	135.25	83.54	197.22	12.70	15.63
02/19/15 11:52:31	16170	0.09	18.79	136.85	78.77	181.60	11.32	14.31
02/19/15 11:53:01	16200	0.09	18.27	158.96	77.37	171.86	10.63	19.86
02/19/15 11:53:31	16230	0.11	21.58	191.78	78.77	179.58	11.73	24.61
02/19/15 11:54:01	16260	0.11	23.18	212.79	78.46	184.59	11.67	18.83
02/19/15 11:54:31	16290	0.08	21.55	214.92	77.68	181.62	11.71	17.34
02/19/15 11:55:01	16320	0.08	25.02	208.04	78.47	181.69	11.67	19.10
02/19/15 11:55:31	16350	0.08	34.61	203.19	79.65	186.71	11.96	19.41
02/19/15 11:56:01	16380	0.08	35.21	194.32	80.27	185.74	12.63	17.79
02/19/15 11:56:31	16410	0.09	23.53	162.04	74.32	178.99	10.19	20.06
02/19/15 11:57:01	16440	0.12	18.99	165.45	74.01	175.57	10.44	16.60
02/19/15 11:57:31	16470	0.10	23.89	173.11	78.83	185.19	11.70	16.99
02/19/15 11:58:01	16500	0.09	25.68	166.28	77.12	183.00	11.21	14.91
02/19/15 11:58:31	16530	0.09	23.23	148.15	83.46	193.74	12.78	17.04
02/19/15 11:59:01	16560	0.10	22.82	155.48	82.13	190.72	11.88	14.94
02/19/15 11:59:31	16590	0.09	24.54	167.98	79.75	189.64	11.57	15.99
02/19/15 12:00:01	16620	0.08	23.88	175.15	83.10	193.31	12.61	14.87
02/19/15 12:00:31	16650	0.08	20.87	168.74	82.28	192.00	12.72	16.36
02/19/15 12:01:01	16680	0.08	19.47	142.62	80.59	187.95	12.29	14.86
02/19/15 12:01:31	16710	0.10	20.52	130.27	72.44	168.76	10.41	16.58
02/19/15 12:02:01	16740	0.08	21.92	175.03	77.46	183.12	11.60	22.09
02/19/15 12:02:31	16770	0.08	23.81	210.69	77.11	181.14	11.41	17.74
02/19/15 12:03:01	16800	0.07	25.55	200.55	77.58	181.10	11.34	18.72
02/19/15 12:03:31	16830	0.09	25.99	185.44	81.66	190.43	11.90	18.10
02/19/15 12:04:01	16860	0.09	27.62	201.93	77.75	181.05	11.95	16.08
02/19/15 12:04:31	16890	0.09	31.72	240.48	78.21	186.89	11.59	20.11
02/19/15 12:05:01	16920	0.09	34.21	252.00	76.68	177.96	11.84	15.30
02/19/15 12:05:31	16950	0.08	34.21	235.13	76.52	179.76	11.11	20.84
02/19/15 12:06:01	16980	0.09	34.16	224.21	78.89	179.71	11.94	19.77
02/19/15 12:06:31	17010	0.14	34.49	232.13	78.60	184.35	12.17	19.00
02/19/15 12:07:01	17040	0.11	37.11	236.26	75.73	177.19	11.43	17.44
02/19/15 12:07:31	17070	0.11	42.07	228.44	80.82	190.08	11.92	18.62
02/19/15 12:08:01	17100	0.10	39.53	208.93	80.79	186.98	11.72	15.75
02/19/15 12:08:31	17130	0.09	25.50	161.46	82.31	191.92	12.45	15.95
02/19/15 12:09:01	17160	0.09	20.19	149.01	84.09	193.61	12.89	16.20
02/19/15 12:09:31	17190	0.11	28.65	206.17	75.65	179.86	10.86	14.25
02/19/15 12:10:01	17220	0.10	33.58	295.13	82.49	192.05	12.35	17.60
02/19/15 12:10:31	17250	0.09	32.53	317.34	80.97	188.27	12.94	14.49
02/19/15 12:11:01	17280	0.09	32.75	271.81	81.08	190.30	12.57	16.50
02/19/15 12:11:31	17310	0.10	35.23	209.20	79.03	184.17	12.12	13.90
RAW AVERAGE		**0.09**	**16.31**	**133.35**	**75.88**	**178.99**	**10.79**	**17.27**

		O_2	NOx	CO	THC			
	Serial Number:	INST-22-0008	INST-NX-0028	INST-CO-0030	INST-IR-0002	INST-IR-0002	INST-IR-0002	INST-IR-0002
			(ppmvd)	(ppmvd)				
Bias	Initial Zero	0.07	0.14	0.30				
	Final Zero	0.09	0.65	0.08				
	Avg. Zero	0.08	0.40	0.19				
	Initial UpScale	12.02	55.24	275.73				
	Final UpScale	12.03	52.02	274.52				
	Avg. UpScale	12.03	53.63	275.13				
Upscale Cal Gas		12.02	55.70	280.10				

EMISSIONS DATA	O_2	NOx	CO	THC	CH_4 (as prop)	C_2H_6 (as prop)	VOC (as prop)
Corrected Raw Average (ppm/% dry basis)	0.01	16.65	135.67	91.71	79.33	8.70	3.69
Corrected Raw Average (ppm/% wet basis)	0.00	13.70	112.21	75.88	65.63	7.19	3.05

APPENDIX C

CALIBRATION GAS CERTIFICATIONS

RED BALL
TECHNICAL GAS SERVICES

Assay Laboratory: Red Ball TGS
555 Craig Kennedy Way
Shreveport, LA 71107
800-551-8150

EPA PROTOCOL GAS CERTIFICATE OF ANALYSIS

Cylinder Number:	EB0059362	Certification Date:	09/12/2014
Product ID Number:	124606	Expiration Date:	09/10/2022
Cylinder Pressure:	1900 PSIG	MFG Facility:	RBTGS-Shreveport-LA
COA #	EB0059362.20140903-0	Lot Number:	EB0059362.20140903
Customer PO. NO.:		Tracking Number:	074188901
Customer:		Previous Certification Dates:	

This calibration standard has been certified per the May 2012 EPA Traceability Protocol, Document EPA-600/R-12/531, using procedure G1.

Do Not Use This Cylinder Below 100 psig (0.7 Megapascal).

Certified Concentration(s)

Component	Concentration	Uncertainty	Analytical Principle
Carbon Dioxide	**9.11 %**	±0.04 %	FTIR
Oxygen	**12.02 %**	±0.04 %	MPA
Nitrogen	Balance		

Analyitcal Measurement Data Available Online.

Reference Standard(s)

Lot	Expiration	Type	Balance	Component	Concentration	Uncertainty(%)	NIST Reference
CC237204.071001	03/24/2017	NTRM	N2	O2	24.52 %	0.494	071001
GC1304111019	09/04/2021	GMIS	N2	CO2	12.57 %	0.552	3221755.02
GC1304111020	09/04/2021	GMIS	N2	CO2	12.5 %	0.552	3221755.02

Analytical Instrumentation

Component	Analytical Principle	Make	Model	Serial	MPC Date
O2	MPA	Horiba	VA-3013	H0000P11	9/8/2014 8:32:34 AM
CO2	FTIR	MKS	MKS 2031DJG2EKVS13T	017146467	8/15/2014 2:32:00 PM

Red Ball Technical Gas Service
PGVP Vendor ID # G12014
Information and Ordering
800-551-8150
Fax (318-425-6309)

LaMeka Dennis
Analytical Chemist

RED BALL
TECHNICAL GAS SERVICES

Assay Laboratory: Red Ball TGS
555 Craig Kennedy Way
Shreveport, LA 71107
800-551-8150

EPA PROTOCOL GAS CERTIFICATE OF ANALYSIS

Cylinder Number:	EB0005591	Certification Date:	08/27/2014
Product ID Number:	124605	Expiration Date:	08/25/2022
Cylinder Pressure:	1900 PSIG	MFG Facility:	RBTGS-Shreveport-LA
COA #	EB0005591.20140821-0	Lot Number:	EB0005591.20140821
Customer PO. NO.:		Tracking Number:	5953594
Customer:		Previous Certification Dates:	

This calibration standard has been certified per the May 2012 EPA Traceability Protocol, Document EPA-600/R-12/531, using procedure G1.

Do Not Use This Cylinder Below 100 psig (0.7 Megapascal).

Certified Concentration(s)

Component	Concentration	Uncertainty	Analytical Principle
Carbon Dioxide	**18.9 %**	±0.11 %	FTIR
Oxygen	**21.04 %**	±0.04 %	MPA
Nitrogen	Balance		

Analyitcal Measurement Data Available Online.

Reference Standard(s)

Lot	Expiration	Type	Balance	Component	Concentration	Uncertainty(%)	NIST Reference
CC237204.071001	03/24/2017	NTRM	N2	O2	24.52 %	0.494	071001
GC1110110959	09/04/2021	GMIS	N2	CO2	21.55 %	0.594	3221755.02
GC1106080816	09/04/2021	GMIS	N2	CO2	15.07 %	0.547	3221755.02

Analytical Instrumentation

Component	Analytical Principle	Make	Model	Serial	MPC Date
O2	MPA	Horiba	VA-3013	H0000P11	8/8/2014 10:15:49 AM
CO2	FTIR	MKS	MKS 2031DJG2EKVS13T	017146467	8/15/2014 9:46:30 AM

Red Ball Technical Gas Service
PGVP Vendor ID # G12014
Information and Ordering
800-551-8150
Fax (318-425-6309)

Fred Holt
Analyst

RED BALL
TECHNICAL GAS SERVICES

Assay Laboratory: Red Ball TGS
555 Craig Kennedy Way
Shreveport, LA 71107
800-551-8150

EPA PROTOCOL GAS CERTIFICATE OF ANALYSIS

Cylinder Number:	EB0004151	Certification Date:	12/01/2014
Product ID Number:	124602	Expiration Date:	11/29/2022
Cylinder Pressure:	1900 PSIG	MFG Facility:	RBTGS-Shreveport-LA
COA #	EB0004151.20141110-0	Lot Number:	EB0004151.20141110
Customer PO. NO.:		Tracking Number:	6038962
Customer:		Previous Certification Dates:	

This calibration standard has been certified per the May 2012 EPA Traceability Protocol, Document EPA-600/R-12/531, using procedure G1.

Do Not Use This Cylinder Below 100 psig (0.7 Megapascal).

Certified Concentration(s)

Component	Concentration	Uncertainty	Analytical Principle
Carbon Monoxide	**54.9 PPM**	±0.3 PPM	FTIR
Nitric Oxide	**54.9 PPM**	±0.2 PPM	NDIR
Total Oxides of Nitrogen	55.7 PPM		
Nitrogen	Balance		

Analyitcal Measurement Data Available Online.

Reference Standard(s)

Lot	Expiration	Type	Balance	Component	Concentration	Uncertainty(%)	NIST Reference
EB0006928.20140707g	10/18/2022	GMIS	N2	NO	296 PPM	0.424	2630
EB0046613.20140501g	07/12/2022	GMIS	N2	CO	352.8 PPM	0.943	021003
GC1102091114	07/26/2019	GMIS	N2	CO	40.4 PPM	0.523	1679c
LD131028.083331.3-0	03/02/2021	GMIS	N2	NO	90.53 PPM	1.052	121001

Analytical Instrumentation

Component	Analytical Principle	Make	Model	Serial	MPC Date
NO	NDIR	Horiba	VIA-510 NO	F0T01S05	11/10/2014 5:34:29 PM
CO	FTIR	MKS	MKS 2031DJG2EKVS13T	017146467	11/12/2014 11:51:30 AM

Red Ball Technical Gas Service
PGVP Vendor ID # G12014
Information and Ordering
800-551-8150
Fax (318-425-6309)

Fred Holt
Analyst

RED BALL TECHNICAL GAS SERVICES

Assay Laboratory: Red Ball TGS
555 Craig Kennedy Way
Shreveport, LA 71107
800-551-8150

CERTIFICATE OF ANALYSIS
EPA PROTOCOL GAS

Cylinder Number:	EB0041741	Certification Date:	11/09/2012
Product ID Number:	124122	Expiration Date:	11/02/2020
Cylinder Pressure:	1900 PSIG	MFG Facility:	RBTGS-Shreveport-LA
COA Number:	GC1210231156-0	Lot Number:	GC1210231156
Customer PO. NO.:		Tracking Number:	065125539
Customer		Previous Certification Dates:	

This calibration standard has been certified per the 1997 EPA Traceability Protocol, Document EPA-600/97/121, using procedure G1 and/or G2. All values so noted are certified to be +/-1% NIST Traceable.

Do Not Use This Cylinder Below 150 psig (1.0 Megapascal).

Certified Concentration(s)

Component	Concentration	Analytical Principle	Accuracy
Nitric Oxide	108 PPM	Non Dispersive Infrared Absorptiometry	+/- 1% NIST
Total Oxides of Nitrogen	109 PPM	Non Dispersive Infrared Absorptiometry	
Carbon Monoxide	111 PPM	FTIR	+/- 1% NIST
Nitrogen	Balance		

Reference Standard(s)

Type	Component	Balance Gas	Concentration	Cylinder Number	Expiration	NIST Reference
GMIS	Nitric Oxide	Nitrogen	98.6 PPM	CC238350	2/14/2013	SRM 1686b
GMIS	Nitric Oxide	Nitrogen	98.6 PPM	CC238350	2/14/2013	SRM 1686b
GMIS	Carbon Monoxide	Nitrogen	97 PPM PPM	EB0014805	7/26/2013	SRM 1679c

Analytical Information

Component		Nitric Oxide	
Analysis Date:		11/2/2012	
Z 0.053	S 16.683	C 18.391	Conc. 109 PPM
S 16.681	C 18.449	Z 0.135	Conc. 109 PPM
C 18.455	Z 0.132	S 16.744	Conc. 109 PPM
Analysis Date:		11/9/2012	
Z 0.356	S 16.966	C 18.639	Conc. 109 PPM
S 17.003	C 18.358	Z 0.343	Conc. 107 PPM
C 18.597	Z 0.328	S 16.938	Conc. 108 PPM

Component		Carbon Monoxide	
Analysis Date:		11/2/2012	
Z -0.0180	S 96.72	C 110.2000	Conc. 111 PPM
S 96.7200	C 109.7	Z 0.035	Conc. 110 PPM
C 110.4	Z 0.0170	S 96.58	Conc. 111 PPM

Component			
Analysis Date:			
Z	S	C	Conc. PPM
S	C	Z	Conc. PPM
C	Z	S	Conc. PPM

Z= Zero Gas S= Span Gas C= Candidate Gas

Fred Holt

Fred Holt, CHMM
Quality Control

Red Ball Technical Gas Service
PGVP Vendor ID # G12014
Information and Ordering
800-551-8150
Fax (318-425-6309)

RED BALL
TECHNICAL GAS SERVICES

Assay Laboratory: Red Ball TGS
555 Craig Kennedy Way
Shreveport, LA 71107
800-551-8150

EPA PROTOCOL GAS CERTIFICATE OF ANALYSIS

Cylinder Number:	EB0039008	Certification Date:	11/04/2014
Product ID Number:	124601	Expiration Date:	11/02/2022
Cylinder Pressure:	1900 PSIG	MFG Facility:	RBTGS-Shreveport-LA
COA #	EB0039008.20141023-0	Lot Number:	EB0039008.20141023
Customer PO. NO.:		Tracking Number:	065155868
Customer:		Previous Certification Dates:	

This calibration standard has been certified per the May 2012 EPA Traceability Protocol, Document EPA-600/R-12/531, using procedure G1.

Do Not Use This Cylinder Below 100 psig (0.7 Megapascal).

Certified Concentration(s)

Component	Concentration	Uncertainty	Analytical Principle
Carbon Monoxide	**280.1 PPM**	±0.8 PPM	FTIR
Nitric Oxide	**276 PPM**	±1.2 PPM	NDIR
Total Oxides of Nitrogen	277 PPM		
Nitrogen	Balance		

Analyitcal Measurement Data Available Online.

Reference Standard(s)

Lot	Expiration	Type	Balance	Component	Concentration	Uncertainty(%)	NIST Reference
46-E-55	04/30/2018	SRM	N2	NO	1487 PPM	0.403	2630
EB0006928.20140707g	10/18/2022	GMIS	N2	NO	296 PPM	0.424	2630
EB0046613.20140501g	07/12/2022	GMIS	N2	CO	352.8 PPM	0.943	021003

Analytical Instrumentation

Component	Analytical Principle	Make	Model	Serial	MPC Date
NO	NDIR	Horiba	VIA-510 NO	F0T01S05	10/20/2014 10:50:52 AM
CO	FTIR	MKS	MKS 2031DJG2EKVS13T	017146467	9/29/2014 12:36:30 PM

Red Ball Technical Gas Service
PGVP Vendor ID # G12014
Information and Ordering
800-551-8150
Fax (318-425-6309)

LaMeka Dennis
Analytical Chemist

RED BALL
TECHNICAL GAS SERVICES

Assay Laboratory: Red Ball TGS
555 Craig Kennedy Way
Shreveport, LA 71107
800-551-8150

EPA PROTOCOL GAS CERTIFICATE OF ANALYSIS

Cylinder Number:	EB0039712	Certification Date:	03/17/2014
Product ID Number:	124600	Expiration Date:	03/16/2016
Cylinder Pressure:	1900 PSIG	MFG Facility:	RBTGS-Shreveport-LA
COA #	LD140226.143257.2-0	Lot Number:	LD140226.143257.2
Customer PO. NO.:		Tracking Number:	065157158
Customer:		Previous Certification Dates:	

This calibration standard has been certified per the May 2012 EPA Traceability Protocol, Document EPA-600/R-12/531, using procedure G1.

Do Not Use This Cylinder Below 100 psig (0.7 Megapascal).

Certified Concentration(s)

Component	Concentration	Uncertainty	Analytical Principle
Carbon Monoxide	**549 PPM**	±1.0 PPM	GCF
Nitric Oxide	**545.9 PPM**	±0.5 PPM	NDIR
Total Oxides of Nitrogen	545.9 PPM		
Nitrogen	Balance		

Analyitcal Measurement Data Available Online.

Reference Standard(s)

Lot	Expiration	Type	Balance	Component	Concentration	Uncertainty(%)	NIST Reference
GC1102100658	07/26/2020	GMIS	N2	NO	1459 PPM	0.468	2630
GC1106080711	01/05/2020	GMIS	N2	CO	594 PPM	0.986	021003
LD131016.152043.1G	11/30/2021	GMIS	N2	NO	539.9 PPM	0.435	2630

Analytical Instrumentation

Component	Analytical Principle	Make	Model	Serial	MPC Date
CO	GCF	Thermo	T48C	0414606441	3/3/2014 12:35:56 PM
NO	NDIR	Horiba	VIA-510 NO	F0T01S05	2/5/2014 2:00:44 PM
NO	NDIR	Horiba	VIA-510 NO	F0T01S05	3/10/2014 4:41:01 PM

Red Ball Technical Gas Service
PGVP Vendor ID # G12014
Information and Ordering
800-551-8150
Fax (318-425-6309)

Fred Holt
Analyst

RED BALL
TECHNICAL GAS SERVICES

Assay Laboratory: Red Ball TGS
555 Craig Kennedy Way
Shreveport, LA 71107
800-551-8150

CERTIFICATE OF ANALYSIS / CERTIFIED GAS

Cylinder Number:	EB0007955	Certification Date:	10/21/14
Product ID Number:	124572	Expiration Date:	10/21/16
Cylinder Pressure:	2015 PSI	MFG Facility:	RBTGS - SHREVEPORT
COA #	GC1410210956	Lot Number:	GC1410210956
Customer PO. NO.:	0	Tracking Number:	013131984
Customer	0	Previous Certification Dates:	

Do Not Use This Cylinder Below 150 psig (1.0 Megapascal).

Certified Concentration(s)

Component	Concentration	Analytical Principle	Accuracy
Ethane	100 PPM	Gravimetric	+/- 2% NIST
Nitrogen	Balance		

This mixture is for laboratory use only, not for drug, household or other use.

This mixture is certified in Mole % to be within + or – 2% of the actual number reported with a confidence of 95%.
This mixture was manufactured by scale; weights traceable to N.I.S.T. Certificate #822/266926-02

LaMeka Dennis

LaMeka Dennis
Analytical Chemist

Red Ball Technical Gas Service
Information and Ordering
PGVP VENDOR ID# G12014
800-551-8150
Fax (318-425-6309)

RED BALL
TECHNICAL GAS SERVICES

Assay Laboratory: Red Ball TGS
555 Craig Kennedy Way
Shreveport, LA 71107
800-551-8150

EPA PROTOCOL GAS CERTIFICATE OF ANALYSIS

Cylinder Number:	EB0057301	Certification Date:	08/28/2014
Product ID Number:	124731	Expiration Date:	08/27/2017
Cylinder Pressure:	1900 PSIG	MFG Facility:	RBTGS-Shreveport-LA
COA #	EB0057301.20140509-0	Lot Number:	EB0057301.20140509
Customer PO. NO.:		Tracking Number:	074329872
Customer:		Previous Certification Dates:	

This calibration standard has been certified per the May 2012 EPA Traceability Protocol, Document EPA-600/R-12/531, using procedure G1.

Do Not Use This Cylinder Below 100 psig (0.7 Megapascal).

Certified Concentration(s)

Component	Concentration	Uncertainty	Analytical Principle
Nitrogen Dioxide	**44.86 PPM**	±0.09 PPM	FTIR
Air	Balance		

Analyitcal Measurement Data Available Online.

Reference Standard(s)

Lot	Expiration	Type	Balance	Component	Concentration	Uncertainty(%)	NIST Reference
061002	03/01/2014	NTRM	AIR	NO2	96.6 PPM	1.449	061002
GC1302121210	05/16/2016	GMIS	AIR	NO2	93.7 PPM	1.471	061002

Analytical Instrumentation

Component	Analytical Principle	Make	Model	Serial	MPC Date
NO2	FTIR	MKS	MKS 2031DJG2EKVS13T	017146467	5/7/2014 2:30:00 PM
NO2	FTIR	MKS	MKS 2031DJG2EKVS13T	017146467	5/7/2014 2:30:00 PM
NO2	FTIR	MKS	MKS 2031DJG2EKVS13T	017146467	8/21/2014 11:30:00 AM

Red Ball Technical Gas Service
PGVP Vendor ID # G12014
Information and Ordering
800-551-8150
Fax (318-425-6309)

Fred Holt
Analyst

APPENDIX D

QUALITY ASSURANCE AND QUALITY CONTROL DATA

QA/QC PROGRAM

Air Hygiene ensures the quality and validity of its emission measurement and reporting procedures through a rigorous quality assurance (QA) program. The program is developed and administered by an internal QA team and encompasses five major areas:

1. QA reviews of reports, laboratory work, and field testing
2. Equipment calibration and maintenance
3. Chain-of-custody
4. Training
5. Knowledge of current test methods

Each of these areas is discussed individually below.

QA Reviews

Air Hygiene's review procedure includes review of each source test report, along with laboratory and fieldwork, by the QA Team. The most important review is the one that takes place before a test program begins. The QA Team works closely with technical division personnel to prepare and review test protocols. Test protocol review includes selection of appropriate test procedures, evaluation of interferences or other restrictions that might preclude use of standard test procedures, and evaluation and/or development of alternate procedures.

Equipment Calibration and Maintenance

The equipment used to conduct the emission measurements is maintained according to the manufacturer's instructions to ensure proper operation. In addition to the maintenance program, calibrations are carried out on each measurement device according to the schedule outlined by the Environmental Protection Agency. Quality control checks are also conducted in the field for each test program.

Chain-of-Custody

Air Hygiene maintains full chain-of-custody documentation on all samples and data sheets. In addition to normal documentation of changes between field sample custodians, laboratory personnel, and field test personnel, Air Hygiene documents every individual who handles any test component in the field (e.g., probe wash, impinger loading and recovery, filter loading and recovery, etc.). Samples are stored in a locked area to which only Air Hygiene personnel have access. Field data sheets are secured at Air Hygiene's offices upon return from the field.

Training

Personnel's training is essential to ensure quality testing. Air Hygiene has formal and informal training programs, which include:

1. Attendance at EPA-sponsored training courses
2. Enrollment in EPA correspondence courses
3. A requirement for all technicians to read and understand Air Hygiene's QA manual
4. In-house training and QA meetings on a regular basis
5. Maintenance of training records

Knowledge of Current Test Methods

With the constant updating of standard test methods and the wide variety of emerging test procedures, it is essential that any qualified source tester keep abreast of new developments. Air Hygiene subscribes to services, which provide updates on EPA reference methods, rules, and regulations. Additionally, source test personnel regularly attend and present papers at testing and emission-related seminars and conferences. Air Hygiene personnel maintain membership in the Air and Waste Management Association and the American Industrial Hygiene Association.

Reproduction and Distribution Policy

Reproducing portions of this test report may omit critical or substantial documentation or be taken out of context and due care must be exercised in this regard. Furthermore, this test report and its associated data shall not be reproduced in full or in part without the written consent of the customer.

COMBUSTION TESTING QUALITY ASSURANCE ACTIVITIES

A number of quality assurance activities were undertaken before, during, and after this testing project. This section of the report combined with the documentation in Appendix C describes each of those activities.

Each instrument's response was checked and adjusted in the field prior to the collection of data via multi-point calibration. The instrument's linearity was checked by adjusting its zero and span responses to zero nitrogen and an upscale calibration gas in the range of the expected concentrations. The instrument response was then challenged with other calibration gases of known concentration and accepted as being linear if the response of the other calibration gases agreed within plus or minus two percent of the range of predicted values. NO_2 to NO conversion was checked via direct connect with an EPA Protocol certified concentration of NO_2 in a balance of nitrogen. Conversion was verified to be between 90 and 110 percent.

After each test run, the analyzers were checked for zero and span drift. This allowed each test run to be bracketed by calibrations and documents the precision of the data just collected. The criterion for acceptable data is that the instrument drift is no more than three percent of the full-scale response. The quality assurance worksheets in the following pages summarize all multipoint calibration checks and zero to span checks performed during the tests. These worksheets (as prepared from the data records of Appendix A) show that no drifts in excess of three percent occurred in the zero to span checks following each test run.

The sampling systems were leak checked by demonstrating that a vacuum greater than 10 in Hg could be held for at least one minute with a decline of less than one inch of Hg. A leak test was conducted after the sample system was set up and before the system was dismantled. This test was conducted to ensure that ambient air had not diluted the sample. Any leakage detected prior to the tests would be repaired and another leak check conducted before testing commenced. No leaks were found during the pre or post-test leak checks.

The absence of leaks in the sampling system was also verified by a sampling system bias check. The sampling system's integrity was tested by comparing the responses of the analyzers to the calibration gases introduced via two paths. The first path was directly into the analyzer and the second path via the sample system at the sample probe. Any difference in the instrument responses by these two methods was attributed to sampling system bias or leakage. The criterion for acceptance is agreement within five percent of the span of the analyzer.

The control gases used to calibrate the instruments were analyzed and certified by the compressed gas vendors to plus or minus one percent accuracy for all gases. EPA Protocol No. 1 was used, where applicable to assign the concentration values traceable to the National Institute of Standards and Technology (NIST), Standard Reference Materials (SRM's). The gas calibration sheets as prepared by the vendor are contained in Appendix C.

Air Hygiene collected and reported the enclosed test data in accordance with the procedures and quality assurance activities described in this test report. Air Hygiene makes no warranty as to the suitability of the test methods. Air Hygiene also assumes no liability relating to the interpretation and use of the test data.

INSTRUMENTAL ANALYSIS QUALITY ASSURANCE DATA

Date: February 19, 2015
Company: XTO Energy, Inc.
Location: Carter County, Oklahoma
Techs: MB/JM

Sample System Leak Check

Date	Sample System	Leak Rate (l/min)
February 19, 2015	1	0

DRIFT AND BIAS CHECK			
≥ 90% Load, Run - 1-1	O_2	NOx	CO
Raw Average	0.48	37.79	224.12
Corrected Average	0.40	39.53	227.34
Initial Zero	0.09	-0.15	0.29
Final Zero	0.07	-0.09	0.41
Avg. Zero	0.08	-0.12	0.35
Initial UpScale	12.09	54.44	277.60
Final UpScale	12.13	52.17	274.50
Avg. UpScale	12.11	53.31	276.05
Sys Resp (Zero)	0.09	-0.15	0.29
Sys Resp (Upscale)	12.09	54.44	277.60
Upscale Cal Gas	12.02	55.70	280.10
Initial Zero Bias	0.00%	0.00%	0.00%
Final Zero Bias	-0.10%	0.06%	0.02%
Zero Drift	0.10%	0.06%	0.02%
Initial Upscale Bias	0.00%	0.00%	0.00%
Final Upscale Bias	0.19%	-2.08%	-0.56%
Upscale Drift	0.19%	2.08%	0.56%
Alternative Specification Abs Diff: Initial Zero	0.00	0.00	0.00
Alternative Specification Abs Diff: Final Zero	0.02	0.06	0.12
Alternative Specification Abs Diff: Initial Upscale	0.00	0.00	0.00
Alternative Specification Abs Diff: Final Upscale	0.04	2.27	3.10
Calibration Span	21.04	109.00	549.00
3% of Cal. Span (drift)	0.63	3.27	16.47
5% of Cal. Span (bias)	1.05	5.45	27.45

DRIFT AND BIAS CHECK			
≥ 90% Load, Run - 1-2	O_2	NOx	CO
Raw Average	0.05	43.71	236.62
Corrected Average	-0.02	45.33	240.86
Initial Zero	0.07	-0.09	0.41
Final Zero	0.07	0.14	0.30
Avg. Zero	0.07	0.03	0.36
Initial UpScale	12.13	52.17	274.50
Final UpScale	12.02	55.24	275.73
Avg. UpScale	12.08	53.71	275.12
Sys Resp (Zero)	0.09	-0.15	0.29
Sys Resp (Upscale)	12.09	54.44	277.60
Upscale Cal Gas	12.02	55.70	280.10
Initial Zero Bias	-0.10%	0.06%	0.02%
Final Zero Bias	-0.10%	0.27%	0.00%
Zero Drift	0.00%	0.21%	0.02%
Initial Upscale Bias	0.19%	-2.08%	-0.56%
Final Upscale Bias	-0.33%	0.73%	-0.34%
Upscale Drift	0.52%	2.82%	0.22%
Alternative Specification Abs Diff: Initial Zero	0.02	0.06	0.12
Alternative Specification Abs Diff: Final Zero	0.02	0.29	0.01
Alternative Specification Abs Diff: Initial Upscale	0.04	2.27	3.10
Alternative Specification Abs Diff: Final Upscale	0.07	0.80	1.87
Calibration Span	21.04	109.00	549.00
3% of Cal. Span (drift)	0.63	3.27	16.47
5% of Cal. Span (bias)	1.05	5.45	27.45

DRIFT AND BIAS CHECK			
≥ 90% Load, Run - 1-3	O_2	NOx	CO
Raw Average	0.09	16.31	133.35
Corrected Average	0.01	16.65	135.67
Initial Zero	0.07	0.14	0.30
Final Zero	0.09	0.65	0.08
Avg. Zero	0.08	0.40	0.19
Initial UpScale	12.02	55.24	275.73
Final UpScale	12.03	52.02	274.52
Avg. UpScale	12.03	53.63	275.13
Sys Resp (Zero)	0.09	-0.15	0.29
Sys Resp (Upscale)	12.09	54.44	277.60
Upscale Cal Gas	12.02	55.70	280.10
Initial Zero Bias	-0.10%	0.27%	0.00%
Final Zero Bias	0.00%	0.73%	-0.04%
Zero Drift	0.10%	0.47%	0.04%
Initial Upscale Bias	-0.33%	0.73%	-0.34%
Final Upscale Bias	-0.29%	-2.22%	-0.56%
Upscale Drift	0.05%	2.95%	0.22%
Alternative Specification Abs Diff: Initial Zero	0.02	0.29	0.01
Alternative Specification Abs Diff: Final Zero	0.00	0.80	0.21
Alternative Specification Abs Diff: Initial Upscale	0.07	0.80	1.87
Alternative Specification Abs Diff: Final Upscale	0.06	2.42	3.08
Calibration Span	21.04	109.00	549.00
3% of Cal. Span (drift)	0.63	3.27	16.47
5% of Cal. Span (bias)	1.05	5.45	27.45

Calibration Date: February 19, 2015
Client: XTO ENERGY, INC.

NOx Span (ppm) = 109.00

THERMO 42C (NOx Analyzer)				
Certified Concentration (ppm)	Instrument Response (ppm)	Calibration Error (%)	Absolute Conc. (ppm)	Pass or Fail (±2%, ≤0.5ppm)
0.00	-0.15	-0.14	0.15	YES (%)
55.70	54.44	-1.16	1.26	YES (%)
109.00	108.82	-0.17	0.18	YES (%)
Linearity = 1.000				

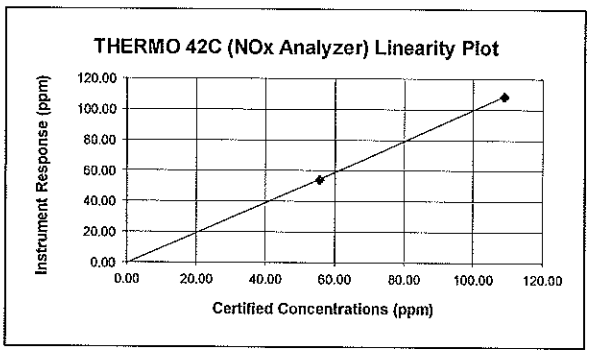

CO Span (ppm) = 549.00

THERMO 48C (CO Analyzer)				
Certified Concentration (ppm)	Instrument Response (ppm)	Calibration Error (%)	Absolute Conc. (ppm)	Pass or Fail (±2%, ≤0.5ppm)
0.00	0.29	0.05	0.29	YES (%)
280.10	277.60	-0.46	2.50	YES (%)
549.00	552.03	0.55	3.03	YES (%)
Linearity = 0.995				

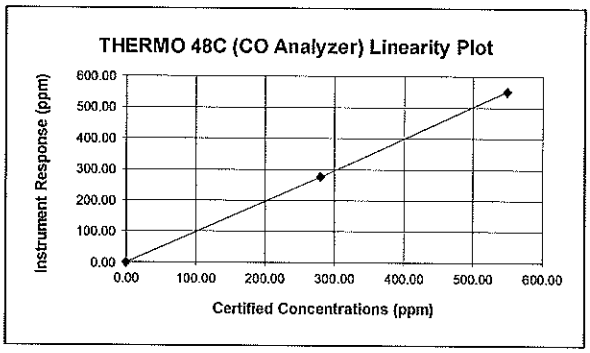

O_2 Span (%) = 21.04

SERVOMEX 1440 (O_2 Analyzer)				
Certified Concentration (%)	Instrument Response (%)	Calibration Error (%)	Absolute Conc. (%)	Pass or Fail (±2%, ≤0.5%)
0.00	0.09	0.43	0.09	YES (%)
12.02	12.09	0.33	0.07	YES (%)
21.04	21.06	0.10	0.02	YES (%)
Linearity = 1.003				

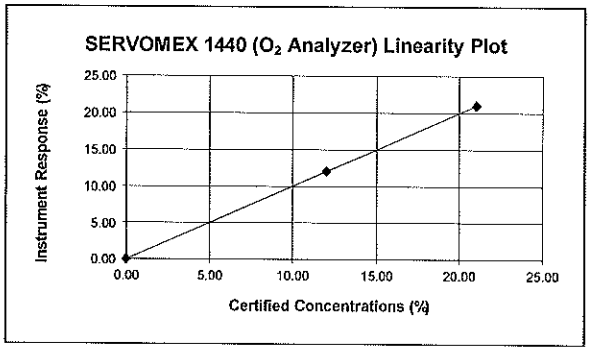

NOx Converter Efficiency

Date: February 19, 2015

Analyzer: INST-NX-0028

RM 7E, (02-27-14), Sections 7.1.4; 8.2.4.1; 12.7; and 13.5 Introduce NO_2 to the analyzer and record the NOx concentration displayed. ... Calculate the converter efficiency using Equation 7E-7. The specification for converter efficiency must be met. ... Air Hygiene also references ALT-0013 for specific NO_2 concentration (40-60 ppm) and EPA Traceability Protocol requirements (±2%).

Audit Gas:	NO_2 Concentration (C_v), ppmvd	**44.86**
Converter Efficiency Calculations:		
	Analyzer Reading, NO Channel, ppmvd	**0.95**
	Analyzer Reading, NOx Channel, ppmvd	**43.03**
	Analyzer Reading, NO_2 Channel ($C_{Dir(NO2)}$), ppmvd	**42.08**
	Converter Efficiency, %	**93.80**

RM 7E, (02-27-14), 13.5 NO_2 to NO Conversion Efficiency Test (as applicable). The NO_2 to NO conversion efficiency, calculated according to Equation 7E-7, must be greater than or equal to 90 percent.

$$Eff_{NO2} = \left(\frac{C_{Dir}}{C_{Ir}}\right) \times 100 \qquad \text{Eq. 7E-7} = \frac{42.08 \text{ ppmvd}}{44.86 \text{ ppmvd}} \times 100 = 93.8\%$$

Date/Time mm/dd/yy hh:mm:ss	Elapsed Time Seconds	NOx ppmvd	NO ppmvd
2/19/2015 7:54	1870	42.87	0.89
2/19/2015 7:54	1880	42.81	0.87
2/19/2015 7:54	1890	42.70	0.87
2/19/2015 7:54	1900	42.84	0.84
2/19/2015 7:54	1910	42.87	0.78
2/19/2015 7:55	1920	42.87	0.81
2/19/2015 7:55	1930	42.95	1.01
2/19/2015 7:55	1940	43.03	0.90
2/19/2015 7:55	**1950**	**43.03**	**0.95**
2/19/2015 7:55	1960	43.00	1.01

XTO ENERGY, INC.
February 19, 2015
Caterpillar, G3306 TA, Unit #805640, Serial #R6S02051
Green 1-1H

Calibration Gas #1

Date (mm/dd/yy)	Time hh:mm:ss	Spectrum File Name	C_2H_6 ppmvd
02/19/15	8:07:07	2195PRE_000141.LAB	100.6101
02/19/15	8:07:17	2195PRE_000142.LAB	100.7644
02/19/15	8:07:26	2195PRE_000143.LAB	100.7613
02/19/15	8:07:35	2195PRE_000144.LAB	101.6177
RAW AVERAGE			100.938

Run #1: Pre-Spike - Native

Date (mm/dd/yy)	Time hh:mm:ss	Spectrum File Name	CO_2 %vw	H_2O (%)	C_2H_6 ppmvw
02/19/15	8:24:01	2195PRE_000249.LAB	11.6424	2.3177	14.4660
02/19/15	8:24:11	2195PRE_000250.LAB	11.6750	2.3337	13.6099
02/19/15	8:24:20	2195PRE_000251.LAB	11.6782	2.3492	12.7979
02/19/15	8:24:29	2195PRE_000252.LAB	11.6600	2.3383	13.0386
RAW AVERAGE			11.664	2.335	13.478

Run #1: Spike A

Date (mm/dd/yy)	Time hh:mm:ss	Spectrum File Name	CO_2 %vw	H_2O (%)	C_2H_6 ppmvw
02/19/15	8:25:35	2195PRE_000259.LAB	10.6051	2.5869	19.3233
02/19/15	8:25:44	2195PRE_000260.LAB	10.5989	2.5894	18.1172
02/19/15	8:25:54	2195PRE_000261.LAB	10.7058	2.6872	19.0553
02/19/15	8:26:03	2195PRE_000262.LAB	10.7307	2.9074	20.1210
RAW AVERAGE			10.660	2.693	19.154

Run #2: Pre-Spike - Native

Date (mm/dd/yy)	Time hh:mm:ss	Spectrum File Name	CO_2 %vw	H_2O (%)	C_2H_6 ppmvw
02/19/15	8:27:09	2195PRE_000269.LAB	11.6976	2.3214	14.4229
02/19/15	8:27:18	2195PRE_000270.LAB	11.6738	2.3173	13.8147
02/19/15	8:27:27	2195PRE_000271.LAB	11.7142	2.3130	13.5403
02/19/15	8:27:37	2195PRE_000272.LAB	11.6638	2.5673	14.4900
RAW AVERAGE			11.687	2.380	14.067

Run #2: Spike A

Date (mm/dd/yy)	Time hh:mm:ss	Spectrum File Name	CO_2 %vw	H_2O (%)	C_2H_6 ppmvw
02/19/15	8:28:33	2195PRE_000278.LAB	10.8263	2.8842	17.8564
02/19/15	8:28:43	2195PRE_000279.LAB	10.8362	2.8329	18.7485
02/19/15	8:28:52	2195PRE_000280.LAB	10.8035	3.3323	20.8725
02/19/15	8:29:01	2195PRE_000281.LAB	10.8053	3.3766	19.1384
RAW AVERAGE			10.818	3.107	19.154

Run #3: Pre-Spike - Native

Date (mm/dd/yy)	Time hh:mm:ss	Spectrum File Name	CO_2 %vw	H_2O (%)	C_2H_6 ppmvw
02/19/15	8:29:48	2195PRE_000286.LAB	11.4969	4.0789	14.0662
02/19/15	8:29:58	2195PRE_000287.LAB	11.6345	3.1891	13.3067
02/19/15	8:30:07	2195PRE_000288.LAB	11.6471	2.8149	13.7591
02/19/15	8:30:16	2195PRE_000289.LAB	11.4964	2.6994	13.5499
RAW AVERAGE			11.569	3.196	13.670

Run #3: Spike A

Date (mm/dd/yy)	Time hh:mm:ss	Spectrum File Name	CO_2 %vw	H_2O (%)	C_2H_6 ppmvw
02/19/15	8:31:03	2195PRE_000294.LAB	10.8196	3.4012	16.1673
02/19/15	8:31:13	2195PRE_000295.LAB	10.8727	3.3937	18.9947
02/19/15	8:31:22	2195PRE_000296.LAB	10.8293	3.7358	19.1923
02/19/15	8:31:32	2195PRE_000297.LAB	10.7915	4.0927	20.0408
RAW AVERAGE			10.828	3.656	18.599

XTO ENERGY, INC.
February 19, 2015
Caterpillar, G3306 TA, Unit #805640, Serial #R6S02051
Green 1-1H

Parameter	Unit	Run 1	Run 2	Run 3
Concentration of C_2H_6 Cylinder	ppmvd	100.94	100.94	100.94

Spike A

Stack CO_2 Concentration	%vw	11.664	11.687	11.569
Stack H_2O Concentration	%	2.335	2.380	3.196
Stack C_2H_6 Concentration	ppmvw	13.478	14.067	13.670
Stack + Spike CO_2 Concentration	%vw	10.660	10.818	10.828
Stack + Spike H_2O Concentration	%	2.693	3.107	3.656
Stack + Spike C_2H_6 Concentration	ppmvw	19.154	19.154	18.599
Dilution Ratio		0.086	0.074	0.064
Ideal C_2H_6 Spike Yield	ppmvd	21.299	20.848	19.678
Percent Recovery C_2H_6	%	81.41%	85.63%	94.21%

XTO ENERGY, INC.
February 19, 2015
Caterpillar, G3306 TA, Unit #805640, Serial #R6S02051
Green 1-1H

CALIBRATION TRANSFER SPECTRA (CTS SCAN) - PRE TEST

Date (mm/dd/yy)	Time hh:mm:ss	Spectrum File Name	CO_2 (%)
02/19/15	8:04:47	2195PRE_000126.LAB	8.8416
02/19/15	8:04:56	2195PRE_000127.LAB	8.8154
02/19/15	8:05:05	2195PRE_000128.LAB	8.8068
02/19/15	8:05:15	2195PRE_000129.LAB	8.7845
02/19/15	8:05:24	2195PRE_000130.LAB	8.8027

PRE TEST AVERAGE **8.81**

CALIBRATION TRANSFER SPECTRA (CTS SCAN) - POST TEST

Date (mm/dd/yy)	Time hh:mm:ss	Spectrum File Name	CO_2 (%)
02/19/15	12:16:40	640R3_000236.LAB	8.9667
02/19/15	12:16:49	640R3_000237.LAB	9.0675
02/19/15	12:16:58	640R3_000238.LAB	9.1164
02/19/15	12:17:08	640R3_000239.LAB	9.1442
02/19/15	12:17:17	640R3_000240.LAB	9.1880

POST TEST AVERAGE **9.10**

Analyzer Make: MKS **Analyzer Model:** 2030
CO_2 Cylinder Conc. % = 9.11

Run ID	Instrument Response (%)	Error (%)	Pass / Fail ±5%
Pre Test	8.81	-3.29	PASS
Post Test	9.10	-0.15	PASS

APPENDIX E

FUEL ANALYSIS RECORDS

Client: XTO ENERGY, INC.
Location: Green 1-1H
Date: February 19, 2015
Project #: xto-15-multi.ok-eng#3

Natural Gas - Fuel Analysis

Standardized to 68 deg F and 14.696 psia - EPA Standards

Gas Component		Mole (%)	Molecular[1] Weight (lb/lb-mole)	Lbs Component per Lb-Mole of Gas	Wt. % of Component	Ideal Gross[1,3] Heating Value (Btu/ft^3)	Fuel Heat Value [HHV] (Btu/SCF)	Ideal Net[1,3] Heating Value (Btu/ft^3)	Fuel Heat Value [LHV] (Btu/SCF)
Methane	CH_4	73.195	16.0430	11.74	52.88	994.85	728.18	895.75	655.65
Ethane	C_2H_6	12.747	30.0700	3.83	17.26	1,743.15	222.19	1,594.41	203.23
Propane	C_3H_8	6.082	44.0970	2.68	12.08	2,478.35	150.72	2,280.17	138.67
iso-Butane	iC_4H_{10}	0.464	58.1230	0.27	1.22	3,203.11	14.88	2,955.38	13.72
n-Butane	nC_4H_{10}	1.914	58.1230	1.11	5.01	3,213.35	61.50	2,965.62	56.76
Iso-Pentane	iC_5H_{12}	0.350	72.1500	0.25	1.14	3,940.87	13.81	3,643.50	12.77
n-Pentane	nC_5H_{12}	0.704	72.1500	0.51	2.29	3,948.75	27.79	3,648.32	25.68
Hexanes	C_6H_{14}	0.591	86.1770	0.51	2.29	4,684.54	27.69	4,337.82	25.64
Heptanes	C_7H_{16}	0.000	100.2040	0.00	0.00	5,419.94	0.00	5,023.77	0.00
Octanes	C_8H_{18}	0.000	114.2310	0.00	0.00	6,155.14	0.00	5,709.23	0.00
Carbon Dioxide	CO_2	1.174	44.0100	0.52	2.33	0.00	0.00	0.00	0.00
Nitrogen	N_2	2.779	28.0134	0.78	3.51	0.00	0.00	0.00	0.00
Hydrogen Sulfide	H_2S	0.000	34.0800	0.00	0.00	627.54	0.00	578.00	0.00
Oxygen	O_2	0.000	31.9988	0.00	0.00	0.00	0.00	0.00	0.00
Helium	He	0.000	4.0026	0.00	0.00	0.00	0.00	0.00	0.00
Hydrogen	H_2	0.000	2.0159	0.00	0.00	319.34	0.00	269.82	0.00
Totals		**100.000**		**22.20**	**100.00**	**dry**	**1,246.75**	**dry**	**1,132.12**
						wet[2,5]	**1,218.01**	**wet[2,5]**	**1,106.01**

Characteristics of Fuel Gas		
Molecular Weight of gas =	22.205	lb/lb-mole
Btu per lb. of gas[4] =	21,629.785	gross (HHV)
Btu per lb. of gas[4] =	19,640.950	net (LHV)
Density of fuel gas[2] =	0.0577	lb/cu. ft
Wt % VOC in fuel gas =	24.02	%
Specific Gravity[1] =	0.7667	

Component	Wt%
carbon	73.80
oxygen	1.69
hydrogen	21.00
nitrogen	3.51
helium	0.00
sulfur	0.00
Total	**100.00**

F-Factor (SCF dry exhaust per MMBtu [HHV]) = 8,741.22
(Based on EPA RM-19) at 68 deg F and 14.696 psia

F-Factor Calculation:

F-Factor = 1,000,000*((3.64*%H)+(1.53*%C)+(0.57*%S)+(0.14*%N)-(0.46*%O))/GCV
GCV = Gross Btu per lb. of gas (HHV)
%H, %C, %S, %N, & %O are percent weight values calculated from fuel analysis and have units of (scf/lb)/%
Density of natural gas based on specific gravity multiplied by density of air at 68 deg F and 14.696 psia.

References:

[1] ASTM D 3588
[2] Civil Engineering Reference Manual, 7th ed. - Michael R. Lindeburg
[3] Mark's Standard Handbook for Mechanical Engineers, 10th ed. - Eugene A. Avallone, Theodore Baumeister III
[4] Introduction to Fluid Mechanics, 3rd ed. - William S. Janna
[5] GPA Reference Bulletin 181-86, revised 1986, reprinted 1995

Good

Legacy Measurement Solutions
MOUNDS , OK
918-665-5400

Customer	: 1028 - XTO	**Date Sampled**	: 01/29/2015
Station ID	: 90581	**Date Analyzed**	: 02/10/2015
Cylinder ID	: 364	**Effective Date**	: 02/01/2015
Producer	: XTO ENERGY	**Cyl Pressure**	: 65
Lease	: GLENN 1-H16	**Temp**	: 59
Area	: 127 - XTO-ARDMORE	**Cylinder Type**	: Spot
State	:	**Sample By**	: L CRIBBS

COMPONENT	MOL%	GPM@0(PSIA)
Methane	73.1951	0.000
Ethane	12.7466	3.413
Propane	6.0816	1.678
Iso-Butane	0.4644	0.152
Normal-Butane	1.9138	0.604
Neo-Pentane	0.0000	0.000
Iso-Pentane	0.3504	0.128
Normal-Pentane	0.7038	0.255
Hexanes++	0.5910	0.257
Nitrogen	2.7786	0.000
Carbon-Dioxide	1.1740	0.000
Oxygen	0.0003	0.000
Hydrogen Sulfide	0.0004	0.000
TOTAL	**100.0000**	**6.487**

Compressibility Factor (Z) @ 0 @ 60 Deg. F = 0.9961 **C5+ GPM** : 0.38300
Ideal Gravity: 0.7681 **Real Gravity:** 0.7707 **C5+ Mole %** : 1.6452

BTU @ (PSIA)	@14.65	@14.696	@14.73	@15.025
Ideal GPM	6.443	6.463	6.478	6.608
Ideal BTU Dry	1,263.98	1,267.95	1,270.88	1,296.33
Ideal BTU Sat	1,241.86	1,245.83	1,248.76	1,274.21
Real GPM	6.468	6.488	6.503	6.634
Real BTU Dry	1,268.88	1,272.88	1,275.83	1,301.48
Real BTU Sat	1,247.19	1,251.19	1,254.15	1,279.81

Comments:

Gas Analysis performed in accordance with GPA 2261 **Sample Count** : 230002822
Analytical Calculations performed in accordance with GPA 2172 **COC** :

APPENDIX F

FIELD SHEET

ENGINE TEST - FIELD DATA SHEET

AIR HYGIENE

Company:	XTO Energy, Inc.
Location:	Green 1-14
Date:	2-19-15
Unit Make and Model:	Caterpillar G3306 TA
Unit Number:	805640
Serial Number:	R65
Data Recorded By:	MB / DM
Tested With AHI Unit(s):	Truck(s): 153 Trailer(s): 217
LDEQ Warmup/Cal Req:	On (Day/Time): — Cal (Day/Time): —

CYLINDER SERIAL NUMBERS		O_2	NOx	CO	THC	CO_2	SO_2
	Low						
	Mid	GB0059362	GB00	GB0039008			
	High	GB0005591	GB00	GB0009712			

NO_2 CONVERSION	
NO_2 Gas (ppm)	44.56
NO Reading (ppm)	
NOx Reading (ppm)	
Cylinder Num	GB0007301

Stack Dia. = _____
Measured By: _____
Measured With: _____

RUN INFORMATION	Run #1	Run #2	Run #3	Run #4	Average
Time Start (hh:mm:ss)	8:35:01	09:46:01	11:12:01		
Time Stop (hh:mm:ss)	9:34:31	10:45:31	12:11:31		
Barometric Pressure (in. Hg)	30.49	30.39	30.37		
Ambient Temperature (°F)	33	37	39		
Relative Humidity (%)	42	50	50		
Suction Pressure (psig)	40.1	40.3	40.0		
Discharge Pressure (psig)	979	965	969		
Rated Horsepower (hp)	203	203	203		
Actual Horsepower (hp)					
Fuel Flow ~~(SCF/hr)~~ SCFM	21.0	20.9	20.9		
Engine Operating Hours					
Engine Speed (npg) or (rpm)	1643	1650	1651		
Air Manifold Temperature (°F)	82	82	83		
Air Manifold Pressure (psig or in. Hg)	15.2	15.1	15.3		
Engine Timing BTDC					

REPORT INFORMATION	INSTRUMENT	SERIAL #
O_2	Servoline 1440	INST-22-0008
NOx	Thermo 42C	INST-NK-0028
CO	Thermo 48C	INST-CO-0050
THC		
CO_2		
SO_2		

RESPONSE TIME	TIME (hh:mm)	RESP (min)
Gas Inject	/ /	/
1st Inst. @ 95%	/ /	/ /
2nd Inst. @ 95%	/ /	/ /
3rd Inst. @ 95%	/ /	/ /

CALIBRATION	O_2 Conc.	O_2 Actual	NOx Conc.	NOx Actual	CO Conc.	CO Actual	THC Conc.	THC Actual	CO_2 Conc.	CO_2 Actual
Zero Gas	0	0.09	0	-0.15	0	0.29				
Low Gas			55.7	54.44	280.1	277.60				
Mid Gas	12.02	12.09	109	108.52	549	552.03				
High Gas	21.04	21.06								

BIAS	O_2 Zero	O_2 Mid	NOx Zero	NOx Mid	CO Zero	CO Mid	THC Zero	THC Mid	CO_2 Zero	CO_2 Mid
Initial/Run #1	0.09	12.09	-0.15	54.44	0.29	277.60				
Run #1/Run #2	0.07	12.13	-0.09	52.17	0.41	274.50				
Run #2/Run #3	0.07	12.02	0.14	55.24	0.30	275.73				
Run #3/Run #4	0.09	12.03	0.65	52.02	0.08	274.52				
Run #4/Final										
Bias Gas Actual Conc.		12.02		55.7		280.1				

AY/AC/CO

AIR HYGIENE, INC.

Testing Solutions for a Better World

RECEIVE
Steve
FEB 13 2013
Thomas
Air/Toxics & Inspection
Coordination Branch
6EN-A

February 8, 2013

EPA-Region 6
Air Permits Section, 6PD-R
1445 Ross Avenue
Dallas, Texas 75202
(405) 702-4100

To Whom It May Concern,

Enclosed please find one copy of the 40 CFR 60, Subpart JJJJ emission testing protocol for three portable combustion engines prepared for XTO Energy, Inc. at various compressor stations in Johnston and Love Counties in Oklahoma. If you have any questions, comments, or concerns please feel free to contact me at (918) 307-8865 office, (918) 809-8947 cell, or danny@airhygiene.com.

Sincerely,

Danny Parr, QSTI
Director of Operations

Encl. (1)

CC
project file xto-13-multi.ok-comp#3
William Payne (XTO Energy, Inc.)

Corporate Headquarters
1600 W Tacoma Street
Broken Arrow, OK 74012

AIR HYGIENE, INC.

(918) 307-8865 or (888) 461-8778
www.airhygiene.com

Remote Testing Offices
Las Vegas, NV 89156
Ft. Worth, TX 76028
Humble, TX 77338
Shreveport, LA 71115
Miami, FL 33101
Philadelphia, PA 19136

40 CFR 60, SUBPART JJJJ EMISSION TESTING PROTOCOL

FOR THREE CATERPILLAR G3306NA RECIPROCATING COMBUSTION ENGINES

PREPARED FOR XTO ENERGY, INC.

AT VARIOUS COMPRESSOR STATIONS IN JOHNSTON AND LOVE COUNTIES, OKLAHOMA

Oklahoma Department of Environmental Quality
Permit Numbers: Pending

January 28, 2013

Prepared By:

Danny Parr, QSTI, Director of Operations

rev - 0

Table of Contents

1.0 INTRODUCTION 1
- **1.1 General Facility Description** 1
- **1.2 Reason for Testing** 1

2.0 SUMMARY 2
- **2.1 Owner Information** 2
- **2.2 Site Information** 2
- **2.3 Test Contractor Information** 2
- **2.4 Expected Test Start Date** 2
- **2.5 Testing Schedule** 3
- **2.6 Test Report Content** 3
- **2.7 Equipment and Procedures** 4
- **2.8 Proposed Variations** 4
- **2.9 Sampling Strategy** 4

Appendix A QA/QC PROGRAM

Appendix B TEST EQUIPMENT CONFIGURATION AND DESCRIPTION
- Figure 1 – Emissions Testing Setup
- Table 1 – Testing Matrix
- Table 2 – Analytical Instrumentation
- Table 3 – Analytical Instrumentation Testing Configuration

Appendix C STACK DRAWINGS AND SITE SPECIFICATIONS

Appendix D EXAMPLE TEMPLATES AND CALCULATIONS

Appendix E STATEMENT OF QUALIFICATIONS

1.0 INTRODUCTION

1.1 General Facility Description

XTO is a natural gas gathering and processing company headquartered in Fort Worth, Texas. The company's business unit covers parts of Oklahoma. Various compressor stations are located in the system, each used to gather, treat, and transfer natural gas from wellheads to major pipeline arteries. The interests of this test protocol are the Holly, McKay, and Velin locations. The equipment to be tested is believed to be portable (trailer mounted) and may be at different locations on the day of the scheduled test. Currently the equipment at each station is specified in the following table.

Table 1.1
Engine Specifications

Station	Make	Model	Unit	Serial No	HP
Holly 01-34H27	Caterpillar	G3306NA	011172	G60X08502	145
McKay 01-22H15	Caterpillar	G3306NA	011171	G6X08524	145
Velin 01-22H15	Caterpillar	G3306NA	11174T	G6X08549	145

The engines are restricted to combusting natural gas only. The G3306NA engines exhaust to the atmosphere through an approximately 10 inch diameter stacks approximately 10 feet above grade level. Fuel flow meters should be located on each engine. However, if the engine is not equipped with a fuel flow meter, manufacturer specifications will be used for calculations. Each engine is equipped with ladder access to the catalyst and stack level.

1.2 Reason for Testing

The compressors are subject to emission testing requirements set forth in the standards designated by the United States Environmental Protection Agency (EPA) Title 40, Code of Federal Regulations, Part 60 (40CFR60), Subpart JJJJ and the Oklahoma Department of Environmental Quality (ODEQ) operating permit. The Subpart JJJJ emissions limits for the engine type are listed in the following table.

Table 1.2
Subpart JJJJ Limits

Station	Unit	NOx Limit	CO Limit	VOC Limit
All	All	1.0 g/hp*hr or 82 pm@15%O_2	2.0 g/hp*hr or 270 ppm@15%O_2	0.7 g/hp*hr or 60 ppm@15%O_2

As such, the engines will be tested for nitrogen oxides (NOx), carbon monoxide (CO), volatile organic compounds (VOCs), and oxygen (O_2) with the units operating within 10 percent of the maximum operating load available from the pipeline during the test day, as determined by XTO personnel.

2.0 SUMMARY

2.1 Owner Information

Company:	XTO
Contact Person:	William J. Payne
Mailing Address:	215 CR 750 Donie, Texas 75838
Office:	(254) 359-3059
Fax:	(254) 359-4660
Email:	William_Payne@XTOEnergy.com

2.2 Site Information

Site:	Holly 01-34H27
County:	Johnston
Latitude, Longitude:	34.1718833, -96.7618205

Site:	McKay 01-22H15
County:	Love
Latitude, Longitude:	33.9393599, -97.1828857

Site:	Velin 01-22H15
County:	Love
Latitude, Longitude:	33.9393599, -97.1828857

2.3 Test Contractor Information

Company:	Air Hygiene International, Inc.
Contact Person:	Danny Parr, Director of Operations
Mailing Address:	1600 West Tacoma Broken Arrow, Oklahoma 74012
Office:	(918) 994-4173
Cell:	(918) 809-8947
Fax:	(918) 307-9131
E-mail:	danny@airhygiene.com
Website:	www.airhygiene.com

2.4 Expected Test Start Date

Testing is anticipated to begin on Monday, March 11, 2013 with additional notification provided by XTO, as necessary.

2.5 Testing Schedule

The following schedule indicates specific activities required to be done each day; however, the schedule may require flexibility and will be compacted or extended into a third week as necessary. Specific site and unit test order will be determined by XTO.

Pre-test Activities	**Due Date**
1. Prepare test protocol (Air Hygiene)	>30 days prior to testing
2. Submit notification to Federal and State agencies (XTO)	≥30 days prior to testing
3. Receive site safety training, if required	day of arrival for setup

On-site Testing Activities	**Time**
Day 1 –Test one engine (≥90% peak load under pipeline conditions)	
• Daily setup and calibrations	12:00 – 13:00
• Conduct testing for NOx, CO, VOC, and O_2 on first engine	13:00 – 17:00
o Collect data for NOx, CO, VOC, and O_2 (3, 1-hr runs)	
o Collect data for moisture (3, RM4: 35-min runs or FTIR: 60-min runs)	
Day 2 –Test two engines (≥90% peak load under pipeline conditions)	
• Daily setup and calibrations	07:00 – 08:00
• Conduct testing for NOx, CO, VOC, and O_2 on first engine	08:00 – 12:00
o Collect data for NOx, CO, VOC, and O_2 (3, 1-hr runs)	
o Collect data for moisture (3, RM4: 35-min runs or FTIR: 60-min runs)	
• Move to next engine	12:00 – 12:30
• Conduct testing for NOx, CO, VOC, and O_2	12:30 – 16:30
o Collect data for NOx, CO, VOC, and O_2 (3, 1-hr runs)	
o Collect data for moisture (3, RM4: 35-min runs or FTIR: 60-min runs)	

Activities after Testing	
• Demobilization of Testing Crew (Air Hygiene)	Day 1
• Preparation of draft test report (Air Hygiene)	Days 2 – 9
• Submit for review to XTO (Air Hygiene)	Day 10
• Review and comment on draft (XTO)	Days 11 – 15
• Prepare final hard copy test reports (Air Hygiene)	Days 16 – 19
• Final reports delivered to XTO (Air Hygiene)	Day 20

2.6 Test Report Content

The Test Reports for the engines will meet the requirements of the ODEQ and the EPA for emissions testing. The reports will include discussion of the following:

- Introduction
- Plant and Sampling Location Description
- Summary and Discussion of Test Results Relative to Acceptance Criteria
- Sampling and Analytical Procedures
- QA/QC Activities

- Test Results and Related Calculations
- Stack and Testing Equipment Drawings
- Raw Field Data and Calibration Data Sheets
- Sampling Log and Chain-of-Custody Records
- Audit Data Sheets

2.7 Equipment and Procedures

Test methods and parameters to satisfy 40 Code of Federal Regulations (CFR) Part 60, Part 51, and Part 63 will include:

- 40 CFR 60, App A, EPA Method 1 for sample location
- 40 CFR 60, App A, EPA Method 3a for molecular weight (O_2)
- 40 CFR 60, App A, EPA Method 4 for stack exhaust moisture
- 40 CFR 60, App A, EPA Method 7e for nitrogen oxides (NOx)
- 40 CFR 60, App A, EPA Method 10 for carbon monoxide (CO)
- 40 CFR 60, App A, EPA Method 18 for gas chromatograph analysis of methane and ethane
- 40 CFR 60, App A, EPA Method 19 for stack exhaust flow
- 40 CFR 60, App A, EPA Method 25a for total hydrocarbons (THCs)
- 40 CFR 51, App M, EPA Method 205 for sample dilution and analyzer calibration

Based on equipment availability and additional test needs, test methods in place of 7e, 10, and/or 18 may also include:

- 40 CFR 63, App A, EPA Method 320 for NOx, CO, methane, or ethane by FTIR Analyzer

2.8 Proposed Variations

All RM4 moisture tests will be approximately 35-minutes in duration. If a FTIR is used moisture tests will be 60-minutes in duration. All moisture tests will be conducted from a single point near the center of the stack. If needed a stainless steel hook may be utilized over the top of the stack and back down into the flow.

Per EPA Emission Measurement Center (EMC) guidelines the stratification test requirements in EPA Method 7e do not lend themselves well to the small-diameter stacks of stationary combustion engines. The emissions from these sources should be well mixed after a muffler. Stationary internal combustion engines should be exempted from these stratification requirements and will be sampled from a single point near the center of the stack.

2.9 Sampling Strategy

Three, 60-minute runs will be performed measuring NOx, CO, VOCs, and O_2 within 10 percent of the peak load that can be accommodated under the pipeline conditions present on the day of the test as determined by XTO personnel. In addition, three, 35-minute stack exhaust moisture runs will be conducted utilizing Method 4 or three, 60-minute stack exhaust moisture runs will be conducted utilizing a FTIR. All moisture, NOx, CO, VOCs, and O_2 testing will be conducted from a single point

near the center of the stack utilizing a stainless steel hook over the top of the exhaust and back down into the flow if needed to accommodate sample port availability.

During the tests, the following operating data will be recorded at a minimum: engine speed (rpm), output power (hp), fuel flow (scfh), air manifold pressure (psi), air manifold temperature (^{o}F), suction pressure (psi), discharge pressure (psi), engine timing (^{o}BTDC), ambient temperature (^{o}F), ambient pressure (in. Hg), and ambient relative humidity (%), and engine hour reading as available. XTO personnel will provide an appropriate fuel gas analysis for each facility.

Depending on available equipment and also additional testing needs VOC emission concentrations will be quantified in accordance with one of two options, or their equivalents:

Option 1:
VOC emission concentrations will be quantified in accordance with principles set forth in EPA Method 18. A VIG 210 will be used for this purpose. The VIG 210 includes both a conventional total hydrocarbon (THC) analyzer and an automated gas chromatograph (GC) for determining VOCs. Two FIDs (flame ionization detectors) are used for the measurements: one for the THC channel and the other for the automated GC which can measure methane, ethane, and residual (VOCs). The THC sample is injected directly to the FID. This detector responds to all hydrocarbons in the sample.

For VOC sampling, a heated gas sampling valve is used for direct injection of the gas on the GC column per Method 18, Section 8.2.2. The GC column separates hydrocarbon components based on their molecular configurations, weights, and boiling points. In this application, the analyzer uses the gas chromatograph column to separate methane and ethane from the heavier residual hydrocarbons (i.e. VOCs). Methane elutes from the sample first, it is immediately detected by the FID; ethane elutes from the column second and is detected. The flow in the column is reversed (back-flushed) and the residual components are recombined and detected by the FID as residual VOCs. The sample time of the VOC is approximately four minutes, so each 60 minute test run corresponds to approximately 14 sample injections.

EPA Method 7e bias and drift check criterion will be used to validate data instead of EPA Method 18 recovery studies as it is has more stringent and comprehensive quality assurance procedures. National Institute of Science and Technology (NIST) traceable propane calibration gas will be used to calibrate the VOC and the calibration procedure following EPA Method 25a. A gas dilutor will be used for VOC calibration, bias, and drift checks per Method 205. In this application, the target analyte is VOC (non methane, non ethane hydrocarbon); therefore, the methane and ethane concentrations will not be formally calibrated.

Option 2:
An MKS Instruments - MultiGas™ Fourier transform infrared (FTIR) spectrometer, or equivalent, is one option for methane and ethane analysis per EPA Method 320. This analyzer may also be used for NOx and CO analysis per the same methodology. The FTIR spectrometer spectral resolution is 0.5 cm^{-1}. The system employs a silicon carbide infrared source at 1200 °C, a helium neon reference laser, beam splitters, and potassium bromide (KBr) cell window, front-surface optical transfer mirrors, and multi-

pass absorption cells. MCT detectors will be used and cooled with liquid nitrogen in order to maintain a constant temperature of 77 Kelvin. The ~5.11-meter multi-pass path cells incorporates aspheric, aberration-correcting mirrors to increase the optical throughput and the detection sensitivity. Transducers and thermocouples are connected directly to the insulated sample cells that provide the pressure and temperatures of the sample streams. During testing, the temperature of the absorption cells will be set at 191 °C. Elevated temperature prevents gas condensation within the cell and minimizes analyte adhesion to the cell walls and mirrors. The volume of the absorption cell is 0.5 liters, so at a sample gas flow rate of 4.0 liters per minute, the sample gas in the cell is refreshed approximately four times each minute. Interferograms consisting of 56 co-added scans will be recorded continuously during the test periods, and will provide approximately 60-second average concentrations.

Results from the FTIR analysis of methane and ethane will then be subtracted from the total hydrocarbon (THC) concentrations determined in a standard flame ionization detector (FID) type analyzer, calibrated and monitored per EPA Method 25a. The resulting difference will be the concentration of VOCs reported on a propane equivalent basis as required in the Federal Register.

APPENDIX A

QA/QC PROGRAM

QA/QC PROGRAM

AIR HYGIENE ensures the quality and validity of its emission measurement and reporting procedures through a rigorous quality assurance (QA) program. The program is developed and administered by an internal QA team and encompasses five major areas:

1. QA reviews of reports, laboratory work, and field testing;
2. Equipment calibration and maintenance;
3. Chain-of-custody;
4. Training; and
5. Knowledge of current test methods.

QA Reviews

AIR HYGIENE's review procedure includes a review of each source test report, along with laboratory and fieldwork by the QA Team.

The most important review is the one that takes place before a test program begins. The QA Team works closely with technical division personnel to prepare and review test protocols. Test protocol review includes selection of appropriate test procedures, evaluation of interferences or other restrictions that might preclude use of standard test procedures, and evaluation and/or development of alternate procedures.

Equipment Calibration and Maintenance

The equipment used to conduct the emission measurements is maintained according to the manufacturer's instructions to ensure proper operation. In addition to the maintenance program, calibrations are carried out on each measurement device according to the schedule outlined by the Environmental Protection Agency. Quality control checks are also conducted in the field for each test program.

Chain-of-Custody

AIR HYGIENE maintains full chain-of-custody documentation on all samples and data sheets. In addition to normal documentation of changes between field sample custodians, laboratory personnel, and field test personnel, AIR HYGIENE documents every individual who handles any test component in the field (e.g., probe wash, impinger loading and recovery, filter loading and recovery, etc.). Samples are stored in a locked area to which only AIR HYGIENE personnel have access. Field data sheets are secured at AIR HYGIENE's offices upon return from the field.

Training

Personnel training is essential to ensure quality testing. AIR HYGIENE has formal and informal training programs, which include:

1. Attendance at EPA-sponsored training courses;
2. Enrollment in EPA correspondence courses;
3. A requirement for all technicians to read and understand Air Hygiene Incorporated's QA manual;
4. In-house training and QA meetings on a regular basis; and
5. Maintenance of training records.

Knowledge of Current Test Methods

With the constant updating of standard test methods and the wide variety of emerging test procedures, it is essential that any qualified source tester keep abreast of new developments. AIR HYGIENE subscribes to services, which provide updates on EPA reference methods, rules, and regulations. Additionally, source test personnel regularly attend and present papers at testing and emission-related seminars and conferences.

COMBUSTION TESTING QUALITY ASSURANCE ACTIVITIES

A number of quality assurance activities are undertaken before, during, and after each testing project. The following paragraphs detail the quality control techniques, which are rigorously followed during testing projects.

Each instrument's response is checked and adjusted in the field prior to the collection of data via multi-point calibration. The instrument's linearity is checked by first adjusting its zero and span responses to zero nitrogen and an upscale calibration gas in the range of the expected concentrations. The instrument response is then challenged with other calibration gases of known concentration and accepted as being linear if the response of the other calibration gases agreed within ± 2 percent of range of the predicted values.

After each test run, the analyzers are checked for zero and span drift. This allowed each test run to be bracketed by calibrations and documents the precision of the data just collected. The criteria for acceptable data are that the instrument drift is no more than 3 percent of the full-scale response. Quality assurance worksheets are prepared to document the multipoint calibration checks and zero to span checks performed during the tests.

The sampling systems are leak checked by demonstrating that a vacuum greater than 10 in Hg could be held for at least 1 minute with a decline of less than 1 in. Hg. A leak test is conducted after the sample system is set up and before the system is dismantled. This test was conducted to ensure that ambient air had not diluted the sample. Any leakage detected prior to the tests would be repaired and another leak check conducted before testing commenced.

The absence of leaks in the sampling system is also verified by a sampling system bias check. The sampling system's integrity is tested by comparing the responses of the analyzers to the calibration gases introduced via two paths. The first path was directly into the analyzer and the second path via the sample system at the sample probe. Any difference in the instrument responses by these two methods is attributed to sampling system bias or leakage. The criteria for acceptance are agreement within 5% of the span of the analyzer.

The control gases used to calibrate the instruments are analyzed and certified by the compressed gas vendors to ± 1% accuracy for all gases. EPA Protocol No. 1 was used where applicable to assign the concentration values traceable to the National Institute of Standards and Technology (NIST), Standard Reference Materials.

AIR HYGIENE maintains a large variety of calibration gases to allow the flexibility to accurately test emissions over a wide range of concentrations.

APPENDIX B

TEST EQUIPMENT CONFIGURATION AND DESCRIPTION

INSTRUMENT CONFIGURATION AND OPERATIONS FOR GAS ANALYSIS

The sampling and analysis procedures to be used conform in principle with the methods outlined in the Code of Federal Regulations, Title 40, Part 60, Appendix A, Methods 1, 3a, 4, 7e, 10, and 18; 40 CFR 51, Appendix M, Method 205; and/or 40 CFR 63, Appendix A, Method 320.

The sample system to be used for the NOx, CO, VOC, and O_2 tests is configured per the following description. A stainless steel probe will be inserted near the center of the stack. The gas sample will be continuously pulled through the probe and transported via 3/8 inch heat-traced Teflon® tubing to a stainless steel, minimum-contact condenser designed to dry the sample and then through Teflon® tubing via a stainless steel/Teflon® diaphragm pump and into the sample manifold within the mobile laboratory. From the manifold, the sample is partitioned to the NOx, CO, and O_2 analyzer through rotameters that control the flow rate of the sample. VOC samples are routed to the analyzer prior to gas conditioning.

The schematic (Figure 1) shows that the sample system is also equipped with a separate path through which a calibration gas could be delivered to the probe and back through the entire sampling system. This allows for convenient performance of system bias checks as required by the testing methods.

All instruments are housed in an air-conditioned, trailer-mounted mobile laboratory. Gaseous calibration standards are provided in aluminum cylinders with the concentrations certified by the vendor according to EPA Protocol No. 1.

This general schematic also illustrates the analyzers to be used for the tests (i.e., O_2, CO). All data from the Reference Method continuous monitoring instruments are recorded on a Logic Beach Hyperlogger. The Hyperlogger retrieves calibrated emissions data from each instrument every second. An average value is recorded every 30 seconds.

The stack gas analysis for O_2 concentrations will be performed in accordance with procedures set forth in EPA Method 3a. The O_2 analyzer uses a paramagnetic cell detector.

EPA Method 7e will be used to determine concentrations of NOx. A chemiluminescence analyzer will be used to provide the analysis. A NO_2 in nitrogen certified gas cylinder will be used to verify at least a 90 percent NO_2 conversion on the day of the test. Method 320, utilizing an FTIR may also be used for the analysis.

CO emission concentrations will be quantified in accordance with procedures set forth in USEPA Method 10 or 320. A continuous nondispersive infrared (NDIR) analyzer will be used for this purpose. Method 320, utilizing an FTIR may also be used for the analysis.

VOC emission concentrations will be quantified in accordance with principles set forth in USEPA Method 18. A VIG 210 will be used for this purpose. The VIG 210 includes both a conventional total hydrocarbon (THC) analyzer and an automated gas chromatograph (GC) for determining VOCs. Two FIDs (flame ionization detectors) are used for the measurements: one for the THC channel and the other for the automated GC which can measure methane, ethane, and residual (VOCs). The THC sample is injected directly to the FID. This detector responds to all hydrocarbons in the sample. Method 320, utilizing an FTIR may also be used for the analysis of methane and ethane.

COPYRIGHT © 2011 AIR HYGIENE INTERNATIONAL, INC.

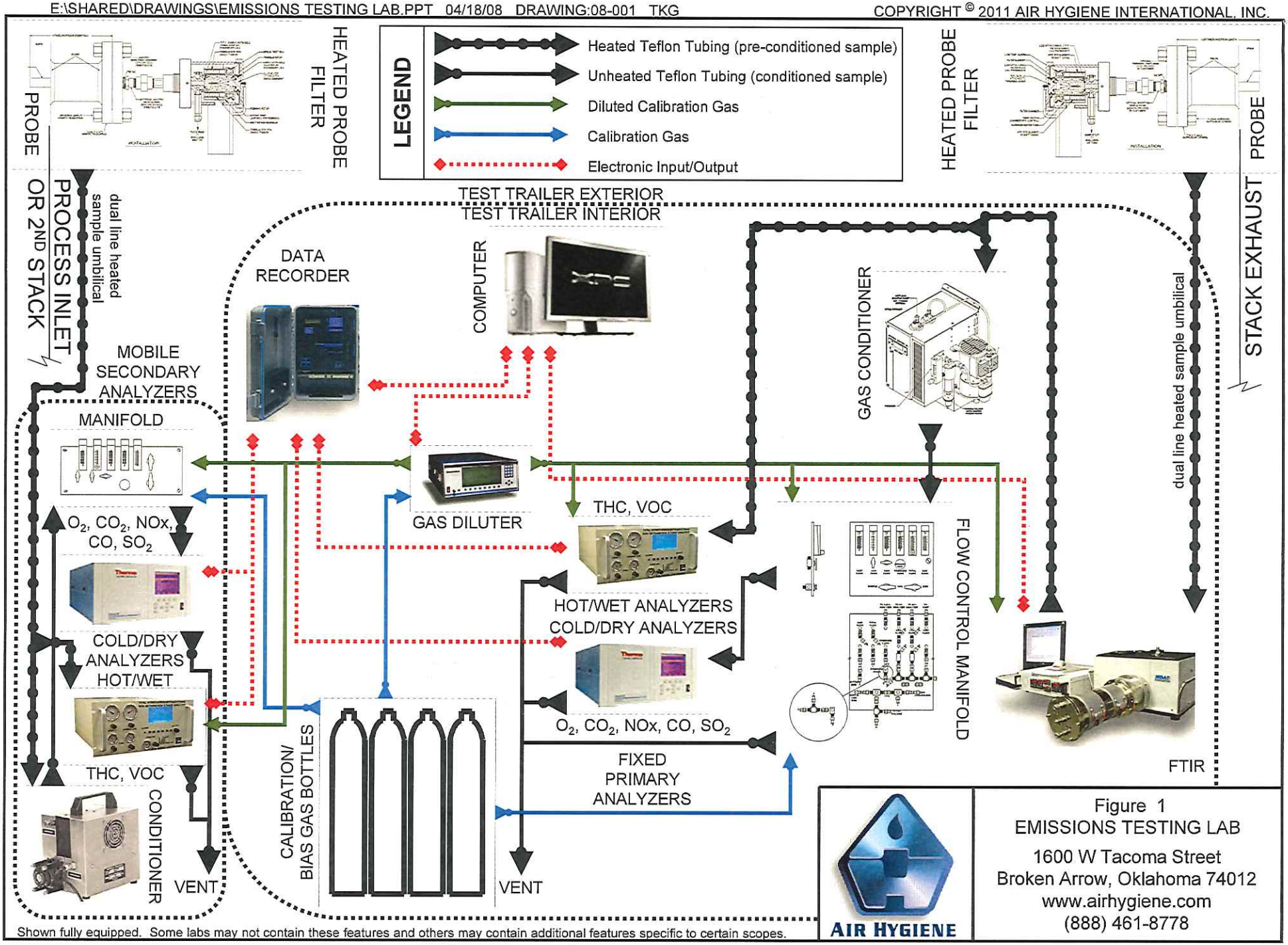

Shown fully equipped. Some labs may not contain these features and others may contain additional features specific to certain scopes.

AIR HYGIENE

Figure 1
EMISSIONS TESTING LAB

1600 W Tacoma Street
Broken Arrow, Oklahoma 74012
www.airhygiene.com
(888) 461-8778

TABLE 1: TESTING MATRIX

Target	EPA Test Method	Locations/Unit Test Load(s)	Test Length
O_2	3a	≥ 90% of peak load under pipeline conditions	3 x 60-minute test runs
Moisture	4 or 320	≥ 90% of peak load under pipeline conditions	3 x 35 (60)-minute test runs
NOx	7e or 320	≥ 90% of peak load under pipeline conditions	3 x 60-minute test runs
CO	10 or 320	≥ 90% of peak load under pipeline conditions	3 x 60-minute test runs
VOC	18 or 320 / 25a	≥ 90% of peak load under pipeline conditions	3 x 60-minute test runs

TABLE 2: ANALYTICAL INSTRUMENTATION

Parameter	Model and Manufacturer	Common Use Ranges	Sensitivity	Detection Principle
O_2	Servomex or equivalent	0-25%	0.1%	Oxygen - Paramagnetic cell
NOx	TECO 42C or equivalent	0-10,000 ppm	0.1 ppm	Thermal reduction of NO_2 to NO. Chemiluminescence of reaction of NO with O_3. Detection by PMT. Inherently linear for listed ranges.
CO	TECO 48C or equivalent	0-10,000 ppm	0.1 ppm	Infrared absorption, gas filter correlation detector, microprocessor based linearization.
VOC	VIG 210	User may select up to 3,000 ppm	0.1 ppm	Gas Chromatography and Flame Ionization Detector
Alternatives	MKS Multigas 2030, or equivalent	User may select up to 1,100 ppm	0.04 ppm	Fourier Transform Infrared Spectroscopy

TABLE 3: ANALYTICAL INSTRUMENTATION TESTING CONFIGURATION

Parameter	Sample Methodology	Example Range	Calibration Gases (based on example range)
O_2	3a	0-21%	Zero = 0 ppm nitrogen Mid = 8.4 – 12.6% High = 21%
NOx	7e or 320	0-1000 ppm	Zero = 0 ppm nitrogen Mid = 400 – 600 ppm High = 1000 ppm
CO	10 or 320	0-1000 ppm	Zero = 0 ppm nitrogen Mid = 400 – 600 ppm High = 1000 ppm
THC/VOC (as propane)	18 or 320	0-100 ppm	Zero = 0 ppm nitrogen Low = 25 – 35 ppm Mid = 45 – 55 ppm High = 80 – 90 ppm

APPENDIX C

STACK DRAWINGS AND SITE SPECIFICATIONS

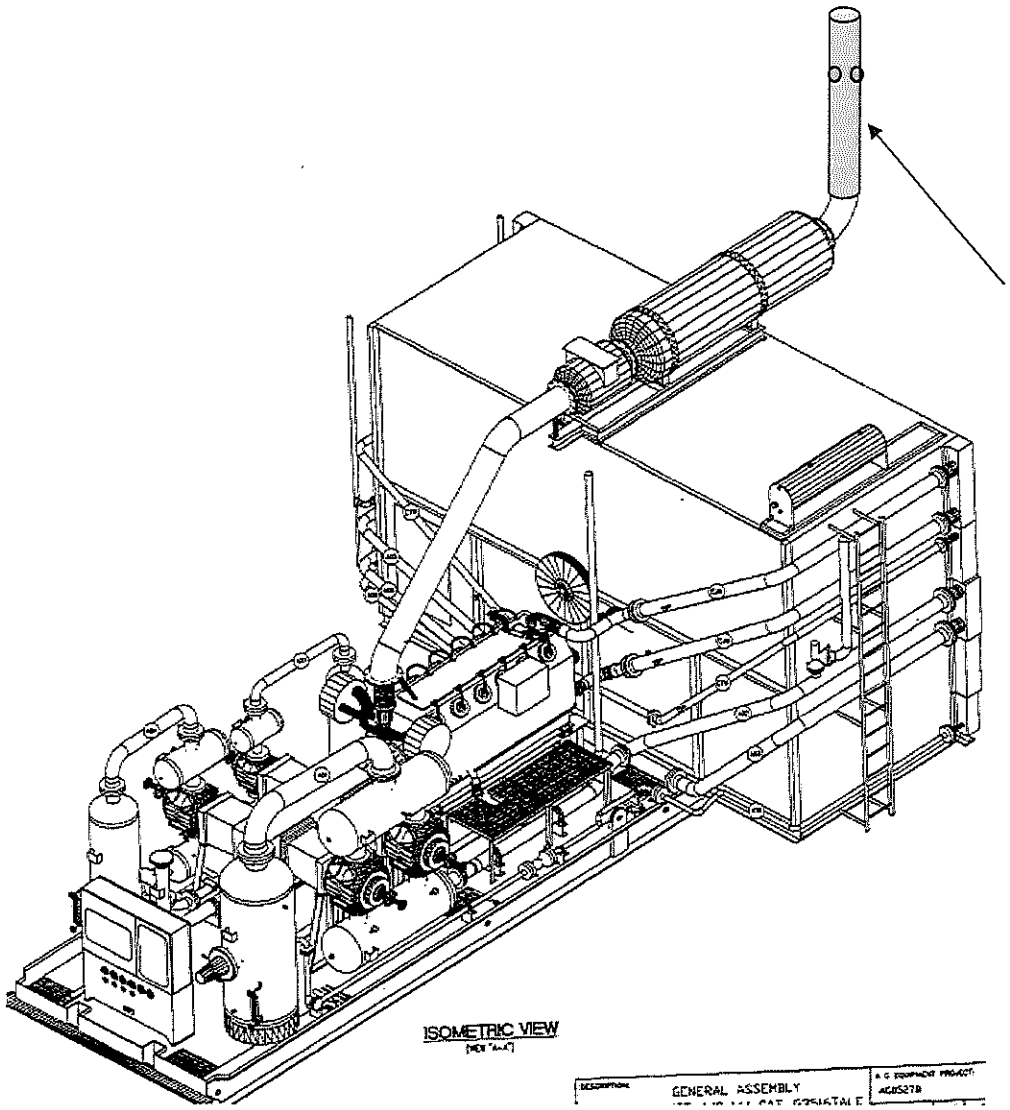

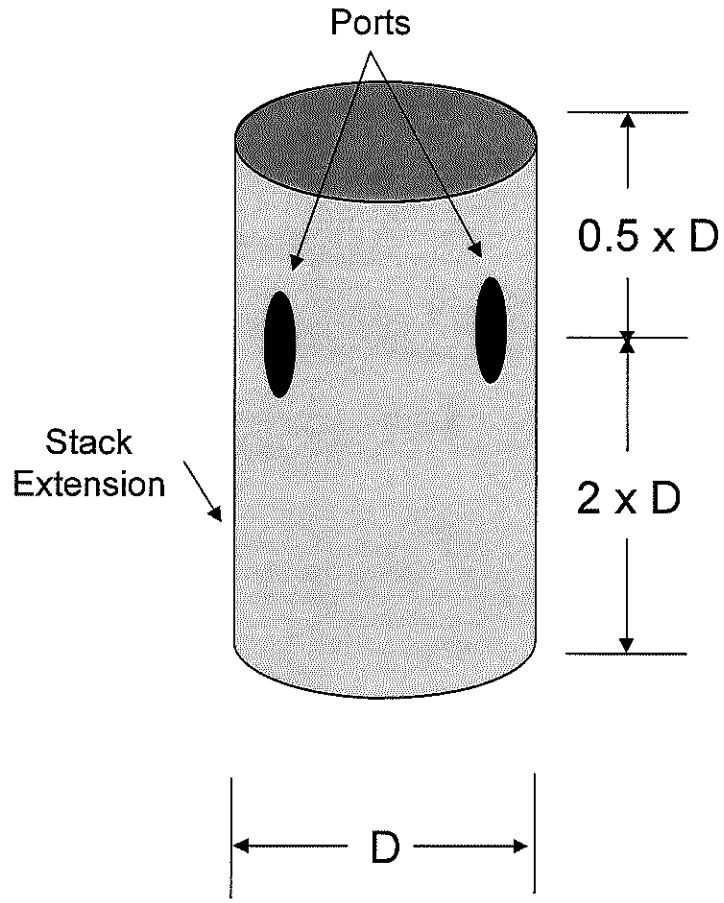

Notes:
D = Inner diameter of the stack and extension
Bottom of extension to ports = 2 x D
Ports to exit to atmosphere = 0.5 x D
Ports need to have a minimum 2" diameter, but can be as simple as holes in the side of the extension
Ports need to be in the same horizontal plain and at a 90 degree orientation to each other

APPENDIX D

EXAMPLE TEMPLATES AND CALCULATIONS

Client XYZ
August 31, 2004
Source ID #415

Run #1
Note: All time in FTIR system time (EST time)

Date Time (mm/dd/yy hh:mm:ss)	Method	Filename	HCl (ppm)	SEC (ppm)	
08/31/04 06:59:58	L HCL Test	RK2R10000003	1.580	1.358	← Start Spray
08/31/04 07:01:08	L HCL Test	RK2R10000004	1.419	1.366	
08/31/04 07:02:18	L HCL Test	RK2R10000005	1.401	1.391	
08/31/04 07:03:28	L HCL Test	RK2R10000006	1.366	1.407	
08/31/04 07:04:38	L HCL Test	RK2R10000007	1.209	1.434	
08/31/04 07:05:48	L HCL Test	RK2R10000008	1.223	1.473	
08/31/04 07:06:58	L HCL Test	RK2R10000009	1.232	1.489	
08/31/04 07:08:08	L HCL Test	RK2R10000010	1.198	1.469	
08/31/04 07:09:18	L HCL Test	RK2R10000011	0.988	1.456	
08/31/04 07:10:31	L HCL Test	RK2R10000012	0.909	1.468	
08/31/04 07:11:41	L HCL Test	RK2R10000013	0.938	1.485	
08/31/04 07:12:51	L HCL Test	RK2R10000014	0.964	1.505	
08/31/04 07:14:01	L HCL Test	RK2R10000015	0.914	1.506	
08/31/04 07:15:11	L HCL Test	RK2R10000016	1.411	1.419	
08/31/04 07:16:21	L HCL Test	RK2R10000017	1.265	1.409	
08/31/04 07:17:31	L HCL Test	RK2R10000018	1.202	1.413	
08/31/04 07:18:41	L HCL Test	RK2R10000019	1.136	1.422	
08/31/04 07:19:51	L HCL Test	RK2R10000020	1.103	1.429	
08/31/04 07:21:01	L HCL Test	RK2R10000021	1.085	1.439	
08/31/04 07:22:11	L HCL Test	RK2R10000022	1.075	1.426	
08/31/04 07:23:21	L HCL Test	RK2R10000023	1.040	1.426	
08/31/04 07:24:31	L HCL Test	RK2R10000024	1.020	1.435	
08/31/04 07:25:41	L HCL Test	RK2R10000025	0.999	1.432	
08/31/04 07:26:51	L HCL Test	RK2R10000026	1.047	1.447	
08/31/04 07:28:01	L HCL Test	RK2R10000027	1.032	1.445	
08/31/04 07:29:11	L HCL Test	RK2R10000028	0.912	1.434	
08/31/04 07:30:21	L HCL Test	RK2R10000029	0.878	1.431	
08/31/04 07:31:31	L HCL Test	RK2R10000030	0.836	1.429	
08/31/04 07:32:41	L HCL Test	RK2R10000031	0.867	1.454	
08/31/04 07:33:51	L HCL Test	RK2R10000032	0.758	1.445	
08/31/04 07:35:00	L HCL Test	RK2R10000033	0.751	1.444	
08/31/04 07:36:10	L HCL Test	RK2R10000034	0.736	1.446	
08/31/04 07:37:20	L HCL Test	RK2R10000035	0.723	1.438	
08/31/04 07:38:30	L HCL Test	RK2R10000036	0.702	1.445	
08/31/04 07:39:40	L HCL Test	RK2R10000037	0.706	1.454	
08/31/04 07:40:50	L HCL Test	RK2R10000038	0.711	1.460	
08/31/04 07:42:00	L HCL Test	RK2R10000039	0.735	1.465	
08/31/04 07:43:10	L HCL Test	RK2R10000040	0.777	1.458	
08/31/04 07:44:20	L HCL Test	RK2R10000041	0.811	1.463	
08/31/04 07:45:30	L HCL Test	RK2R10000042	0.818	1.468	
08/31/04 07:46:40	L HCL Test	RK2R10000043	0.824	1.454	
08/31/04 07:47:50	L HCL Test	RK2R10000044	0.785	1.448	
08/31/04 07:49:00	L HCL Test	RK2R10000045	0.750	1.444	
08/31/04 07:50:10	L HCL Test	RK2R10000046	0.740	1.444	
08/31/04 07:51:20	L HCL Test	RK2R10000047	0.733	1.442	
08/31/04 07:52:30	L HCL Test	RK2R10000048	0.746	1.437	
08/31/04 07:53:40	L HCL Test	RK2R10000049	0.740	1.438	
08/31/04 07:54:50	L HCL Test	RK2R10000050	0.750	1.444	
08/31/04 07:56:00	L HCL Test	RK2R10000051	0.752	1.438	
08/31/04 07:57:10	L HCL Test	RK2R10000052	0.759	1.445	
08/31/04 07:58:20	L HCL Test	RK2R10000053	0.773	1.442	
08/31/04 07:59:30	L HCL Test	RK2R10000054	0.787	1.453	← Stop Spray
AVERAGE			**0.954**	**1.443**	

Client XYZ
August 31, 2004
Source ID #415

Spike 100% - 1
Note: All time in FTIR system time (EST time)

Date Time (mm/dd/yy hh:mm:ss)	Method	Filename	HCL (ppm)	SEC (ppm)
08/31/04 08:13:57	L HCL Test	RK2M10000003	2.098	1.140
08/31/04 08:15:07	L HCL Test	RK2M10000004	2.275	1.117
08/31/04 08:16:17	L HCL Test	RK2M10000005	2.462	1.125
08/31/04 08:17:27	L HCL Test	RK2M10000006	2.748	1.126
08/31/04 08:18:37	L HCL Test	RK2M10000007	2.955	1.112
08/31/04 08:19:47	L HCL Test	RK2M10000008	3.084	1.141
08/31/04 08:20:57	L HCL Test	RK2M10000009	3.152	1.140
08/31/04 08:22:07	L HCL Test	RK2M10000010	3.077	1.110
08/31/04 08:23:17	L HCL Test	RK2M10000011	3.077	1.121
08/31/04 08:24:27	L HCL Test	RK2M10000012	2.969	1.093
08/31/04 08:25:37	L HCL Test	RK2M10000013	2.836	1.115
08/31/04 08:26:47	L HCL Test	RK2M10000014	2.569	1.084
AVERAGE			2.775	

Matrix spike flow must be 10% of the system flow. Matrix spike yield must be 10% of 50% of the average stack value or five times the minimum detection limit (MDL).

System flow	4	LPM
Matrix spike flow	0.4	LPM
Average stack value	3.00	ppm
Concentration to dilute by 90%	1.50	ppm
Ideal matrix spike yield	2.85	ppm
Minimum matrix spike yield	2.00	ppm
Maximum matrix spike yeild	3.71	ppm

QA Notes:

1. The uncertainty value reported by the FTIR software, AutoQuant4, is a measure of how well the model works. It is calculated from the residual spectrum. The residual has a mean of zero; if the model fits the data exactly the residual itself will be zero everywhere. The number that AutoQuant4 reports is called the Standard Error of the Estimated Concentration, or SEC, after the Halaand nomenclature. It is also known a the Marginal Standard Deviation. The uncertainties in the concentration are proportional to the square root of the sums of the squares of the residual.

2. Calibration spectral data and run spectral data is not included in this report. Electronic copy of this data is available upon request.

3. Ammonia concentration was quantified using the MIDAC standards library and dilutions of 150 ppm NH3 certified gas bottle.

Error Analysis

Error analysis for Method 320 gives a measure of the accuracy of the numerical results. Errors associated with the instrument response, calibration, and absorption models are important in understanding how real or accurate a given numerical result may be. Error analysis was performed on hydrogen chloride since many of the other target analytes were not found and hydrogen chloride seemed to be the major HAP. The root-mean-square (RMS) noise level is the standard measure of noise for the FTIR used during sampling. The RMS noise level of can be estimated or calculated. The mth analytical region is the absorbance region for each analyte. The analytical region of the analyte is described by the upper wavenumber (FU) and the lower wavenumber (FL) that are bracketed in the AutoQuant method for each analyte. The RMSD is easily calculated using an array basic program that is run using Grams software (developed by Dr. Grant Plummer, Rho Squared, Durham, NC.)

The band area (AAI) of the ith analyte in the mth analytical region, is taken at the concentration (CL) corresponding to the product of its required detection limit (DL) and analytical uncertainty limit (AU). A spectral standard of the analyte is scaled down using a scaling factor that is based on the ratio of the scaled concentration-path length product to the reference concentration path length product.

$$F = \frac{D_s}{D_R} = \frac{AU_i x DL_i x L_s'}{D_R}$$

The value of DL was chosen to be 0.006 ppm with an AU of 5% or 0.05 for all hydrogen chloride. CL is 0.000007 ppm. The path length (M) was 10 m. The absorbance of the hydrogen chloride spectrum was scaled down so that the absorbance in the analytical region corresponded to the absorbance at 0.00001 ppm. This was done by applying each scaling factor (F) to the spectrum using the Arithmetic Calculation function of Grams (using an array basic expression: #s = #s*scaling factor). The analytical region was integrated and the area was reported as AAI. In some cases just one range of wavenumbers in the mth analytical region are used to determine the $AAI_{(truncated)}$, in other cases a broad range of the mth analytical region is used.

The minimum analyte uncertainty (MAU) is the calculated minimum concentration for which the analytical uncertainty limit (AU) in the measurement of the ith analyte, based on spectral data in the mth analytical region, can be maintained. MAU can be calculated as follows:

$$MAU_{im} = (RMS)(DL_i)(AU_i)\left(\frac{FU_m - FL_m}{AAI_{im}}\right)$$

Appendix D to addendum to Method 320 equation D.1

where the weighted average accounted for by Grams is given by:

$$MAU_i = \sum_{k\in(m')} W_{ik} MAU_{ik}$$

Appendix D to addendum to Method 320

cquation D.2

The MAU of the hydrogen chloride was 0.0510 ppm, which meets the detection limit for measuring below 1 ppm. The fractional reproducibility uncertainty (%) FRU is the error in the concentration of the ith analyte. This weighted mean of the quantities FRU_{im}, based on the CTS spectra, is a fractional value representing the uncertainty in the analytical results caused by variations in FTIR system performance. The FRU is calculated by:

$$FRU_I = (SRMS_I)\left(\frac{FFU_I - FFL_I}{BAV_I}\right) .$$

The quantity $SRMS_I$ is based on the difference between the CTS spectra {R1} and {R2}. FFU_I and FFL_I are the upper and lower wavenumbers of the CTS spectral region associated with the analytical region. The BAV_I is the mth analytical region absorption area of the CTS spectrum.

The fractional calibration uncertainty (FCU) is the mean of the absolute fractional difference between the ASC and ISC. Where ASC is the accepted standard concentration and ISC is the indicated standard concentration. The percentage differences were reported in the error analysis spread sheet in decimal form. The highest FCU was approximately 6.94% difference in the ASC and ISC for hydrogen chloride.

The fractional model uncertainty (FMU) is twice the product of the +- error (sigma) given by AutoQuant Pro. Two FMU cases were calculated: a low FMU when there is 0 – 1 ppm hydrogen chloride in the sample stream and a high FMU when there is up to 47.1 ppm hydrogen chloride in the sample stream. The MAU was taken to be the maximum of the overall errors (OFU).

Error Analysis

All Reference spectra were made on the instrument used for analysis

Reference spectra used:

1. N2 purge, 150C, 15.0 psi, 128 sc
2. LWB HCL Test, 150C, 15.0 psi, ppm HCl

	HCl
Reference Spectra concentration ppm-m	25.0
Reference Spectra Concentration, ppm-m/K	0.0591
Reference Spectra Concentration, ppm	2.500
Reference Band Area	0.1579
Sample Pathlength, M	10.00
Reference Pathlength, M	10.00
DL, ppm	0.006
DL, ppm-m	0.060
DL, ppm-m/K	0.0001418
AU	0.05
CL	0.000
CL (ppm-m/K)	0.000007
FU	3093.8
FL	2630.7
FC	2862.3
AAI (truncated region)	0.0000030
AAI	0.0000030
BAV	0.0001000
SRMS	0.0000010
RMSD (array basic)	0.0000400
MAU, ppm, 121C	2.3153
MAU, ppm-m, 250F	23.1525
MAU, ppm-m/K, 250F	0.0510
FRU	4.6305
FCU	0.0694
FMU	2.461508
OCU	4.6305
scaling factor	0.00012
RMS (Grams Integration Function)	0.0001

EMISSION CALCULATIONS SUMMARY TABLES

Company: XYZ, Inc. **Date:** August 31, 2004
Unit Tested: Source ID #415 **Location:**

Stack Gas Flow Rate: Method 2

Test #	O_2 Conc. (%)	Stack Flow (SCF/hr)	Stack Flow (SCF/min)	Fuel Rate (TPH)	Production Rate (TPH)	Caustic Spray Rate (GPM)
1	15.1	6,886,714	114,779	5.73	13.00	3.00
2	15.2	6,847,861	114,131	5.19	12.58	3.00
3	14.9	7,020,901	117,015	6.08	13.63	3.00
Average	**15.1**	**6,918,492**	**115,308**	**5.67**	**13.07**	**3.00**

CO_2 Mass Emission Rate

Test #	CO_2 Conc. (%)
1	7.9
2	7.8
3	8.0
Average	**7.9**

Hydrogen Chloride Mass Emission Rate

Test #	HCl Conc. (ppmvw)	HCl @ 15% O2 (ppmvw)	MW	E (lb/hr)	E (ton/yr)
1	1.0	0.98	36.46	0.62	2.72
2	0.7	0.8	36.46	0.47	2.07
3	0.4	0.4	36.46	0.28	1.23
Average	**0.7**	**0.7**	**36.5**	**0.5**	**2.01**

EMISSION CALCULATIONS

Stack Gas Flow Rate via
EPA Method 19 (F-Factor)

$$Q_S(SCFH) = \left(\frac{FFactor \times Q_f \times HHV}{1{,}000{,}000}\right) \times \left(\frac{20.9\%}{20.9\% - CRA_{O_2}}\right)$$

Q_f	=	fuel flow (SCFH)
HHV	=	high heating value of gas - dry (Btu/SCF)
FFactor	=	F factor (SCF/MMBTU)
CRA_{O2}	=	concentration of O_2 (%)

Concentration @ 15% Oxygen and ISO Standard Day Conditions

$$ppm@15\%O_2\ \&\ Iso = ppm@15\%O_2 \times \sqrt{\frac{PCD + 14.695}{PCD + \left(\frac{P_B}{2.036}\right)}} \times 2.718^{(19\times(RH_{SP} - 0.00633))} \times \left(\frac{519}{460 + {}^{o}F}\right)^{1.53}$$

PCD: Absolute pressure (psia) at combuster inlet (PCD) at 29.95 in. Hg ambient pressure
P_B: Gauge pressure (psig) at combuster inlet (PCD) at ambient pressure test conditions
RH_{SP}: Ambient specific humidity at test conditions (lbs moisture/lb dry air)
°F: Ambient temperature at test conditions (°F)
Standard ISO Day Conditions: Temperature = 519 °R
Pressure = 1 atm

Mass Emission Rate Calculations

$$E(lb/hr) = \frac{CRA}{10^6} \times \frac{Q_S \times MW}{G}$$

CRA	=	corrected raw average
Qs	=	stack gas flow rate (Method 19)
MW	=	molecular weight (lb/lb-mol)
G	=	ideal gas conversion factor

$$E(g/hp \cdot hr) = \frac{E_{lb/hr} \times 453.6}{bhp}$$

bhp	=	brake horsepower

$$E(ton/yr) = \frac{E_{lb/hr} \times hr_{year}}{2000}$$

hr_{year}	=	hours per year

Adjustment to 15% Oxygen

$$ppm@15\%O_2 = CRA \times \left(\frac{20.9\% - C_{O_2}}{20.9\% - CRA_{O_2}}\right)$$

CRA = corrected raw average
C_{O2} = oxygen concentration to correct to
CRA_{O2} = actual corrected raw average oxygen concentration

ENGINE TEST - FIELD DATA SHEET

AIR HYGIENE

Company:	
Location:	
Date:	
Unit Make and Model:	
Unit Number:	
Serial Number:	
Data Recorded By:	
Tested With AHI Unit(s):	Truck(s): Trailer(s):
LDEQ Warmup/Cal Req:	On (Day/Time): Cal (Day/Time):

CYLINDER SERIAL NUMBERS		O_2	NOx	CO	THC	CO_2	SO_2
	Low						
	Mid						
	High						

NO_2 CONVERSION	
NO_2 Gas (ppm)	
NO Reading (ppm)	
NOx Reading (ppm)	
Cylinder Num	

Stack Dia. = _____
Measured By: _____
Measured With: _____

RUN INFORMATION	Run #1	Run #2	Run #3	Run #4	Average
Time Start (hh:mm:ss)					
Time Stop (hh:mm:ss)					
Barometric Pressure (in. Hg)					
Ambient Temperature (°F)					
Relative Humidity (%)					
Suction Pressure (psig)					
Discharge Pressure (psig)					
Rated Horsepower (hp)					
Actual Horsepower (hp)					
Fuel Flow (SCF/hr)					
Turbo Speed (npt) or (rpm)					
Engine Speed (npg) or (rpm)					
Air Manifold Temperature (°F)					
Air Manifold Pressure (psig or in. Hg)					
Engine Timing BTDC					

REPORT INFORMATION		
	INSTRUMENT	SERIAL #
O_2		
NOx		
CO		
THC		
CO_2		
SO_2		

RESPONSE TIME		
	TIME (hh:mm)	RESP (min)
Gas Inject	/ /	
1st Inst. @ 95%	/ /	/ /
2nd Inst. @ 95%	/ /	/ /
3rd Inst. @ 95%	/ /	/ /

CALIBRATION	O_2		NOx		CO		THC		CO_2	
	Conc.	Actual	Conc.	Actual	Conc.	Actual	Conc.	Actual	Conc.	Actual
Zero Gas										
Low Gas										
Mid Gas										
High Gas										

BIAS	O_2		NOx		CO		THC		CO_2	
	Zero	Mid	Zero	Mid	Zero	Mid	Zero	Mid	Zero	Mid
Initial/Run #1										
Run #1/Run #2										
Run #2/Run #3										
Run #3/Run #4										
Run #4/Final										

Bias Gas Actual Conc. _____ _____ _____ _____ _____

SOURCE SAMPLING TITLE PAGE

	English Units	○ ◉	Cells Unprotected

Source Information				
Plant Name	XYZ Generating Station			
Sampling Location	Unit X			
Fuel or Source Type	Petrocoke			
Fuel F-Factor	1983	1983	1983	

Test Information			
Starting Test Date		05/16/02	
Project #		xyz-02-usa-rata#1	
Operator		TKG	
Standard Temperature		68	oF
Standard Pressure		29.92	in Hg
Minimum Required Sample Vol.		21	scf
Run Duration		30	minutes
Base Run Number		2LOW	
Number of Ports Available		4	
Number of Ports Used		4	
Port Inside Diameter		4.00	in
Circular Stack			

Test Equipment Information			
Meter Box Number		E-1361R	
Meter Calibration Factor	(Y)	0.984	
Orifice Meter Coefficient	($\Delta H_@$)	1.765	in H_2O
Pitot Identification		1	
Pitot Tube Coefficient	(C_p)	0.840	
Probe Number		1	
Probe Length		108.00	in
(SS, Glass ....) Liner Material		ss	
Impinger Case Number		SAMP-BC-0002	

Testing Company Information	
Company Name	Air Hygiene International, Inc.
Address	5634 S. 122nd East Ave., Suite F
City, State Country Zip	Tulsa, OK 74146
Project Manager	Thomas K. Graham
Phone Number	(918) 307-8865
Fax Number	(918) 307-9131

METHOD 1 - SAMPLE AND VELOCITY TRAVERSES FOR CIRCULAR SOURCES

Plant Name	XYZ Generating Station	**Date**	05/16/02
Sampling Location	Unit X	**Project #**	xyz-02-usa-rata#1
Operator	TKG	**# of Ports Available**	4
Stack Type	Circular	**# of Ports Used**	4
Stack Size	Large	**Port Inside Diameter**	4.00

Circular Stack or Duct Diameter			
Distance to Far Wall of Stack	(L_{fw})	187.00	in
Distance to Near Wall of Stack	(L_{nw})	7.00	in
(=Lfw - Lnw) **Diameter of Stack**	(D)	180.00	in
(=3.14(D/2/Cunits)2) **Area of Stack**	(A_s)	176.71	ft2

Distance from Port to Disturbances			
Distance Downstream	(B)	1794.00	in
(=B/D) **Diameters Downstream**	(B_D)	9.97	diameters
Distance Upstream	(A)	3750.00	in
(=A/D) **Diameters Upstream**	(A_D)	20.83	diameters

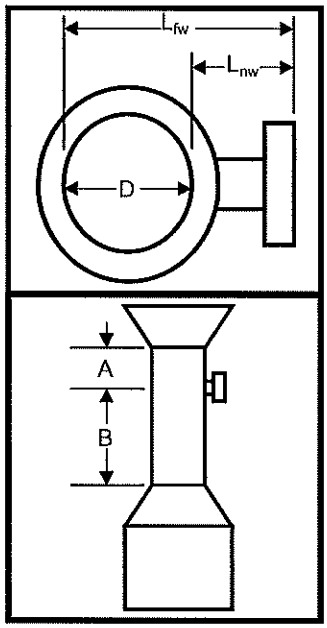

Number of Traverse Points Required			
Diameters to Flow Disturbance		**Minimum Number of[1] Traverse Points**	
Down Stream	**Up Stream**	**Particulate Points**	**Velocity Points**
2.00-4.99	0.50-1.24	24	16
5.00-5.99	1.25-1.49	20	16
6.00-6.99	1.50-1.74	16	12
7.00-7.99	1.75-1.99	12	12
>= 8.00	>=2.00	8 or 12[2]	8 or 12[2]
Upstream Spec		12	12
Downstream Spec		12	12
Traverse Pts Required		12	12

[1] Check Minimum Number of Points for the Upstream and Downstream conditions, then use the largest.
[2] 8 for Circular Stacks 12 to 24 inches
12 for Circular Stacks over 24 inches

Number of Traverse Points Used			
4	**Ports by**	3	**Across**
12	**Pts Used**	12	**Required**
		Velocity Traverse	

LOCATION OF TRAVERSE POINTS IN CIRCULAR STACKS									
Traverse Point Number	Fraction of Stack Diameter from Inside Wall to Traverse Point								
	rse Poi								
	2	4	6	8	10	12	14	16	18
1	0.146	0.067	0.044	0.032	0.026	0.021	0.018	0.016	0.014
2	0.854	0.250	0.146	0.105	0.082	0.067	0.057	0.049	0.044
3		0.750	0.296	0.194	0.146	0.118	0.099	0.085	0.075
4		0.933	0.704	0.323	0.226	0.177	0.146	0.125	0.109
5			0.854	0.677	0.342	0.250	0.201	0.169	0.146
6			0.956	0.806	0.658	0.356	0.269	0.220	0.188
7				0.895	0.774	0.644	0.366	0.283	0.236
8				0.968	0.854	0.750	0.634	0.375	0.296
9					0.918	0.823	0.731	0.625	0.382
10					0.974	0.882	0.799	0.717	0.618
11						0.933	0.854	0.780	0.704
12						0.979	0.901	0.831	0.764

Traverse Point Locations			
Traverse Point Number	**Fraction of Stack Diameter**	**Distance from Inside Wall**	**Distance Including Reference Length**
		in	in
1	0.04	7 7/8	14 7/8
2	0.15	26 2/8	33 2/8
3	0.30	53 2/8	60 2/8
4			
5			
6			
7			
8			
9			
10			
11			
12			

METHOD 3a - DETERMINATION OF DRY MOLECULAR WEIGHT BY ANALYZER

Plant Name	XYZ Generating Station					**Date**	05/16/02
Sampling Location	Unit X					**Project #**	xyz-02-usa-rata#1
Operator	TKG					**# of Ports Used**	4
Fuel Type	N/A		**Minimum Fuel Factor**			**Maximum Fuel Factor**	
Orsat Leak Check	☑	**PreTest**	☑	**PostTest**		**Orsat Identification**	SAMP-BC-0002

Gas Analysis Data									
Run Number		2LOW-1		**Run Start Time**		7:50	**Run Stop Time**		8:21
Sample Analysis Time	**Carbon Dioxide Conc.** (%CO2)	**Oxygen Conc.** (%O2)	**Carbon Monoxide Conc.** (ppmCO)	**Carbon Dioxide Conc.** ($\%CO_2$)	**Oxygen Conc.** ($\%O_2$)	**Carbon Monoxide Conc.** (%CO)	**Nitrogen Conc.** ($\%N_2$)	**Dry Molecular Weight** (M_d)	**Molecular Weight Deviation** (ΔM_d)
hh:mm	percent	percent	ppm	percent	percent	percent	percent	lb/lb-mole	lb/lb-mole
0:31	15.0	4.9	72.1	15.0	4.9	0.0	80.1	30.60	0.00
Results			**Averages**	15.0	4.9	0.0	80.1	30.60	
Average Calculated Fuel Factor			$(F_o)_{avg}$	1.063		**Molecular Wt Deviation < 0.3?**			☑
Average Excess Air			$(\%EA)_{avg}$	30.2	percent	**Fuel Factor in Handbook Range?**			☑

Gas Analysis Data									
Run Number		2LOW-2		**Run Start Time**		10:09	**Run Stop Time**		10:42
Sample Analysis Time	**Carbon Dioxide Conc.** (%CO2)	**Oxygen Conc.** (%O2)	**Carbon Monoxide Conc.** (ppmCO)	**Carbon Dioxide Conc.** ($\%CO_2$)	**Oxygen Conc.** ($\%O_2$)	**Carbon Monoxide Conc.** (%CO)	**Nitrogen Conc.** ($\%N_2$)	**Dry Molecular Weight** (M_d)	**Molecular Weight Deviation** (ΔM_d)
hh:mm	percent	percent	ppm	percent	percent	percent	percent	lb/lb-mole	lb/lb-mole
0:33	15.1	4.9	72.3	15.1	4.9	0.0	80.0	30.61	0.00
Results			**Averages**	15.1	4.9	0.0	80.0	30.61	
Average Calculated Fuel Factor			$(F_o)_{avg}$	1.062		**Molecular Wt Deviation < 0.3?**			☑
Average Excess Air			$(\%EA)_{avg}$	29.8	percent	**Fuel Factor in Handbook Range?**			☑

Gas Analysis Data									
Run Number		2LOW-3		**Run Start Time**		11:40	**Run Stop Time**		12:10
Sample Analysis Time	**Carbon Dioxide Conc.** (%CO2)	**Oxygen Conc.** (%O2)	**Carbon Monoxide Conc.** (ppmCO)	**Carbon Dioxide Conc.** ($\%CO_2$)	**Oxygen Conc.** ($\%O_2$)	**Carbon Monoxide Conc.** (%CO)	**Nitrogen Conc.** ($\%N_2$)	**Dry Molecular Weight** (M_d)	**Molecular Weight Deviation** (ΔM_d)
hh:mm	percent	percent	ppm	percent	percent	percent	percent	lb/lb-mole	lb/lb-mole
0:30	15.3	4.7	71.3	15.3	4.7	0.0	80.0	30.63	0.00
Results			**Averages**	15.3	4.7	0.0	80.0	30.63	
Average Calculated Fuel Factor			$(F_o)_{avg}$	1.060		**Molecular Wt Deviation < 0.3?**			☑
Average Excess Air			$(\%EA)_{avg}$	28.7	percent	**Fuel Factor in Handbook Range?**			☑

Fuel Factor Fo		
Fuel Type	**Minimum**	**Maximum**
Coal, Anthracite	1.016	1.130
Coal, Lignite	1.016	1.130
Coal, Bituminous	1.083	1.230
Oil, Distillate	1.260	1.413
Oil, Residual	1.210	1.370
Gas, Natural	1.600	1.836
Gas, Propane	1.434	1.586
Gas, Butane	1.405	1.553
Wood	1.000	1.120
Wood Bark	1.003	1.130

Formulas Used
$\%CO_2 = V_{CO2}$
$\%O_2 = V_{O2} - V_{CO2}$
$\%CO = V_{CO} - V_{O2}$
$\%N_2 = 100 - \%CO_2 - \%O_2 - \%CO$
$M_d = .44(\%CO_2) + .32(\%O_2) + .28(\%N_2 + \%CO)$
$\Delta M_d = M_d - M_{davg}$
$F_o = (20.9 - \%O_2 - .5\%CO)/(\%CO_2 + \%CO)$
$\%EA = 100(\%O_2 - .5\%CO)/(.264\%NO_2 - (\%O_2 - .5\%CO))$

METHOD 4 - DETERMINATION OF MOISTURE CONTENT IN STACK GASES

Plant Name	XYZ Generating Station				**Date**	05/16/02
Sampling Location	Unit X				**Project #**	xyz-02-usa-rata#1
Operator	TKG				**# of Ports Used**	4
Stack Type	Circular				**Meter Box Number**	E-1361R
Train Leak Check	☑	**PreTest**	☑	**PostTest**	**Meter Cal Factor (Y)**	0.984

Moisture Content Data								
Run Number	2LOW-1		**Run Start Time**		7:50	**Run Stop Time**		8:21
Total Meter Volume	(V_m)	22.130	dcf	**Barometric Press.**		(P_b)	30.15	in Hg
Avg Meter Temp	$(t_m)_{avg}$	87	oF	**Stack Static Press.**		(P_{static})	1.00	in H2O
Avg Stack Temp	$(t_s)_{avg}$	215	oF	**Avg Orifice Press.**		$(\Delta H)_{avg}$	1.70	in H2O
		Impinger 1	**Impinger 2**	**Impinger 3**	**Impinger 4**	**Impinger 5**	**Impinger 6**	**Impinger 7**
		g	g	g	g	ml	ml	ml
Contents		DI	DI		Sil Gel			
Final Value	$(V_f),(W_f)$	850.00	832.00	620.00	863.00			
Initial Value	$(V_i),(W_i)$	835.00	819.00	616.00	855.00			
Net Value	$(V_n),(W_n)$	15.0	13.0	4.0	8.0			
Results								
Total Volume	(V_t)	0.00	ml	**Water Vol Condensed**		$(V_{wc(std)})$	0.000	scf
Total Weight	(W_t)	40.00	g	**Water Vol Weighed**		$(V_{wsg(std)})$	1.886	scf
Std Meter Volume	$(V_{m(std)})$	21.259	dscf	**Sat. Moisture Content**		$(B_{ws(svp)})$	100.0	%
Calc Moisture Content	$(B_{ws(calc)})$	8.1	%	**Final Moisture Content**		(B_{ws})	8.1	%

Moisture Content Data								
Run Number	2LOW-2		**Run Start Time**		10:09	**Run Stop Time**		10:42
Total Meter Volume	(V_m)	22.540	dcf	**Barometric Press.**		(P_b)	30.18	in Hg
Avg Meter Temp	$(t_m)_{avg}$	88	oF	**Stack Static Press.**		(P_{static})	1.00	in H2O
Avg Stack Temp	$(t_s)_{avg}$	215	oF	**Avg Orifice Press.**		$(\Delta H)_{avg}$	1.70	in H2O
		Impinger 1	**Impinger 2**	**Impinger 3**	**Impinger 4**	**Impinger 5**	**Impinger 6**	**Impinger 7**
		g	g	g	g	ml	ml	ml
Contents		DI	DI		Sil Gel			
Final Value	$(V_f),(W_f)$	880.00	841.00	620.00	874.00			
Initial Value	$(V_i),(W_i)$	850.00	832.00	620.00	863.00			
Net Value	$(V_n),(W_n)$	30.0	9.0	0.0	11.0			
Results								
Total Volume	(V_t)	0.00	ml	**Water Vol Condensed**		$(V_{wc(std)})$	0.000	scf
Total Weight	(W_t)	50.00	g	**Water Vol Weighed**		$(V_{wsg(std)})$	2.358	scf
Std Meter Volume	$(V_{m(std)})$	21.643	dscf	**Sat. Moisture Content**		$(B_{ws(svp)})$	100.0	%
Calc Moisture Content	(B_{ws})	9.8	%	**Final Moisture Content**		(B_{ws})	9.8	%

Moisture Content Data								
Run Number	2LOW-3		**Run Start Time**		11:40	**Run Stop Time**		12:10
Total Meter Volume	(V_m)	22.700	dcf	**Barometric Press.**		(P_b)	30.17	in Hg
Avg Meter Temp	$(t_m)_{avg}$	89	oF	**Stack Static Press.**		(P_{static})	1.00	in H2O
Avg Stack Temp	$(t_s)_{avg}$	218	oF	**Avg Orifice Press.**		$(\Delta H)_{avg}$	1.70	in H2O
		Impinger 1	**Impinger 2**	**Impinger 3**	**Impinger 4**	**Impinger 5**	**Impinger 6**	**Impinger 7**
		g	g	g	g	ml	ml	ml
Contents		DI	DI		Sil Gel			
Final Value	$(V_f),(W_f)$	912.00	847.00	622.00	874.00			
Initial Value	$(V_i),(W_i)$	880.00	841.00	620.00	874.00			
Net Value	$(V_n),(W_n)$	32.0	6.0	2.0	0.0			
Results								
Total Volume	(V_t)	0.00	ml	**Water Vol Condensed**		$(V_{wc(std)})$	0.000	scf
Total Weight	(W_t)	40.00	g	**Water Vol Weighed**		$(V_{wsg(std)})$	1.886	scf
Std Meter Volume	$(V_{m(std)})$	21.737	dscf	**Sat. Moisture Content**		$(B_{ws(svp)})$	100.0	%
Calc Moisture Content	(B_{ws})	8.0	%	**Final Moisture Content**		(B_{ws})	8.0	%

METHOD 2 - DETERMINATION OF STACK GAS VELOCITY AND VOLUMETRIC FLOW RATE

Plant Name	XYZ Generating Station				Date	05/16/02
Sampling Location	Unit X				Project #	xyz-02-usa-rata#1
Operator	TKG				# of Ports Used	4
Stack Type	Circular				Pitot Identification	1
Pitot Leak Check	☑	PreTest	☑	PostTest	Pitot Coefficient (C_p)	0.84

Stack Dimensions			
Diameter or Length of Stack	(D)	180.00	in
Width of Stack	(W)		in
Area of Stack	(A_s)	176.71	ft2

Pressures			
Barometric Pressure	(P_b)	30.17	in Hg
Static Pressure	(P_{static})	1.00	in H2O
Absolute Stack Pressure	(P_s)	30.24	in Hg

Stack Gas Composition			
Composition Data:		Actual Composition	
Carbon Dioxide Concentration	($\%CO_2$)	15.0	%
Oxygen Concentration	($\%O_2$)	4.9	%
Carbon Monoxide Concentration	(%CO)	0.0	%
Nitrogen Concentration	($\%N_2$)	80.1	%
Stack Moisture Content	(B_{ws})	8.149	%
Stack Dry Molecular Weight	(M_d)	30.60	lb/lb-mole
Stack Wet Molecular Weight	(M_s)	29.58	lb/lb-mole

Results			
Avg Stack Gas Velocity	(v_s)	46.2	ft/sec
Avg Stack Dry Std Flow Rate	(Q_{sd})	21390710	dscf/hr
Avg Stack Dry Std Flow Rate	(Q_{sd})	356512	dscf/min
Avg Stack Wet Flow Rate	(Q_{aw})	490105	acf/min
Avg Stack Wet Std Flow Rate	(Q_{aw})	23288375	ascf/hr

Stack Cross Section Schematic

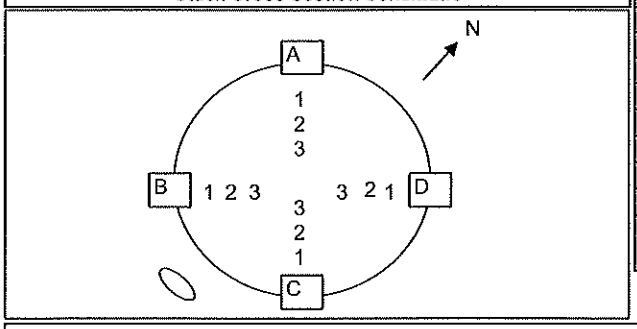

Velocity Traverse Data

Run Number		2LOW-V1		
Run Time	8:33	Start	8:48	End
Traverse Point	Velocity Head (Δp)	Null Angle	Stack Temp (t_s)	Local Velocity $(v_s)_i$
	in H2O	deg	oF	ft/sec
A-1	0.55	0	213	46.2
A-2	0.66	0	213	50.6
A-3	0.62	0	214	49.1
B-1	0.50	0	214	44.1
B-2	0.68	0	215	51.4
B-3	0.60	0	215	48.3
C-1	0.42	0	213	40.4
C-2	0.55	0	214	46.2
C-3	0.58	0	215	47.5
D-1	0.50	0	213	44.0
D-2	0.50	0	214	44.1
D-3	0.47	0	214	42.7
Average	0.55	0	214	
	0.74	= Square roots of Δp		

Formulas Used

$A_s = DW/K_u$ for Rectangular Stacks

$A_s = (\pi(D/2)^2)/K_u$ for Circular Stacks

where $K_u = 1$ for metric units

where $K_u = 144$ (in^2/ft^2) for English units

$P_s = P_{bar} + P_{static}/13.6$

$\%N_2 = 100 - \%CO_2 - \%O_2 - \%CO$

$M_d = .44(\%CO_2) + .32(\%O_2) + .28(\%N_2 + \%CO)$

$M_s = M_d(1 - B_{ws}) + 18B_{ws}$

$(\Delta p)^{1/2}_{avg} = {}^1/_n\Sigma(\Delta p^{1/2})$

$T_{s(avg)} = {}^1/_n\Sigma t_s + T_u$

where $T_u = 273$ °K for metric units

where $T_u = 460$ °R for English units

$v_s = K_pC_p(\Delta p)^{1/2}_{avg}(T_{s(avg)}/(P_sM_s))^{1/2}$

where $K_p = 34.97$ for metric units

where $K_p = 85.49$ for English units

$Q_{sd} = 3600(1 - B_{ws})v_sA_s(T_{std}/T_{s(avg)})(P_s/P_{std})$

where $T_{std} = 293$ °K, $P_{std} = 760$ mm Hg, for metric units

where $T_{std} = 528$ °R, $P_{std} = 29.92$ in Hg, for English units

Air Permit # :	
Plant Name or Location:	
Date:	
Project Number:	
Manufacturer & Equipment:	
Model:	
Serial Number:	
Unit Number:	
Test Load:	
Tester(s) / Test Unit(s):	

		RUN																	
	UNITS	1	2	3	4	5	6	7	8	9	10	11	12	13	14	15	16	17	18
Start Time	hh:mm:ss																		
End Time	hh:mm:ss																		
Bar. Pressure	in. Hg																		
Amb. Temp.	°F																		
Rel. Humidity	%																		
Spec. Humidity	lb water / lb air																		
Comb. Inlet Pres.	psig																		
NOx Water Inj.	gpm																		
Total Fuel Flow	SCFH																		
Heat Input	MMBtu/hr																		
Power Output	megawatts																		
Steam Rate	lb/hr																		

Client:
Location:
Date:
Project #:

Natural Gas - Fuel Analysis

Standardized to 68 deg F and 14.696 psia - EPA Standards

Gas Component		Mole (%)	Molecular[1] Weight (lb/lb-mole)	Lbs Component per Lb-Mole of Gas	Wt. % of Component	Ideal Gross[1,3] Heating Value (Btu/ft^3)	Fuel Heat Value [HHV] (Btu/SCF)	Ideal Net[1,3] Heating Value (Btu/ft^3)	Fuel Heat Value [LHV] (Btu/SCF)
Methane	CH_4								
Ethane	C_2H_6								
Propane	C_3H_8								
Iso-Butane	iC_4H_{10}								
n-Butane	nC_4H_{10}								
Iso-Pentane	iC_5H_{12}								
n-Pentane	nC_5H_{12}								
Hexanes	C_6H_{14}								
Heptanes	C_7H_{16}								
Octanes	C_8H_{18}								
Carbon Dioxide	CO_2								
Nitrogen	N_2								
Hydrogen Sulfide	H_2S								
Oxygen	O_2								
Helium	He								
Hydrogen	H_2								
Totals						dry		dry	
						wet[2,5]		wet[2,5]	

Characteristics of Fuel Gas		
Molecular Weight of gas =		lb/lb-mole
Btu per lb. of gas[4] =		gross (HHV)
Btu per lb. of gas[4] =		net (LHV)
Density of fuel gas[2] =		lb/cu. ft
Wt % VOC in fuel gas =		%
Specific Gravity[1] =		

Component	Wt%
carbon	
oxygen	
hydrogen	
nitrogen	
helium	
sulfur	
Total	

F-Factor (SCF dry exhaust per MMBtu [HHV]) =
(Based on EPA RM-19) at 68 deg F and 14.696 psia

F-Factor Calculation:

F-Factor = 1,000,000*((3.64*%H)+(1.53*%C)+(0.57*%S)+(0.14*%N)-(0.46*%O))/GCV

GCV = Gross Btu per lb. of gas (HHV)

%H, %C, %S, %N, & %O are percent weight values calculated from fuel analysis and have units of (scf/lb)/%

Density of natural gas based on specific gravity multiplied by density of air at 68 deg F and 14.696 psia.

References:

[1] ASTM D 3588
[2] Civil Engineering Reference Manual, 7th ed. - Michael R. Lindeburg
[3] Mark's Standard Handbook for Mechanical Engineers, 10th ed. - Eugene A. Avallone, Theodore Baumeister III
[4] Introduction to Fluid Mechanics, 3rd ed. - William S. Janna
[5] GPA Reference Bulletin 181-86, revised 1986, reprinted 1995

Calibration Date:
Client:

NOx Span (ppm) =

THERMO 42H (NOx Analyzer)				
Certified Concentration (ppm)	Instrument Response (ppm)	Calibration Error (%)	Absolute Conc. (ppm)	Pass or Fail (±2%, ≤0.5ppm)
Linearity =				

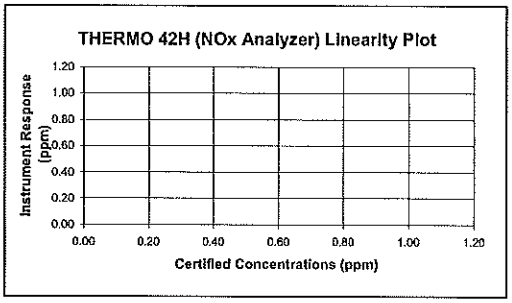

CO Span (ppm) =

API 300 (CO Analyzer)				
Certified Concentration (ppm)	Instrument Response (ppm)	Calibration Error (%)	Absolute Conc. (ppm)	Pass or Fail (±2%, ≤0.5ppm)
Linearity =				

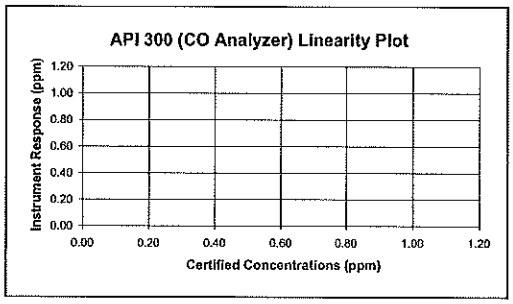

O2 Span (%) =

SERVOMEX 1400 (O_2 Analyzer)				
Certified Concentration (ppm)	Instrument Response (ppm)	Calibration Error (%)	Absolute Conc. (ppm)	Pass or Fail (±2%, ≤0.5%)
Linearity =				

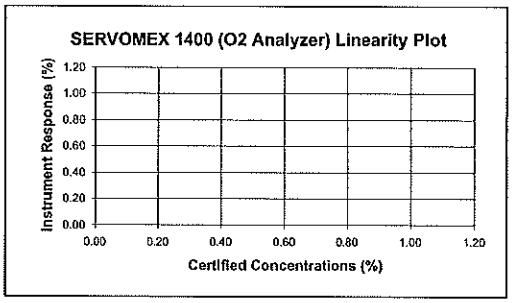

THC Range (ppm) =

THERMO 51 (THC Analyzer)				
Certified Concentration (ppm)	Instrument Response (ppm)	Calibration Error (%)	Estimated Point (ppm)	Pass or Fail (±2,5%)[1]
Linearity =				

[1]-zero/high based on 2% of span,low/mid based on 5% of concentration

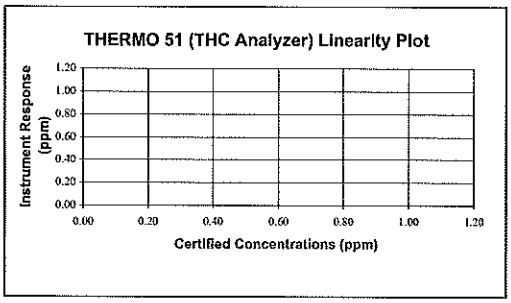

CO2 Span (%) =

FUJI 3300 (CO_2 Analyzer)				
Certified Concentration (ppm)	Instrument Response (ppm)	Calibration Error (%)	Absolute Conc. (ppm)	Pass or Fail (±2%, ≤0.5%)
Linearity =				

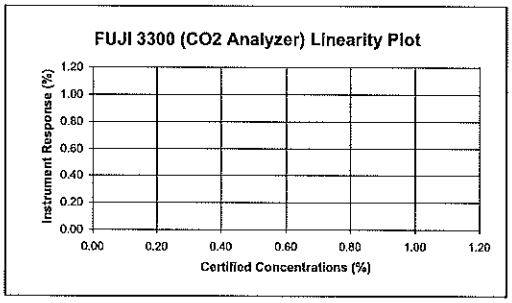

NOx Converter Efficiency

Date:

Analyzer:

RM 7E, (08-15-06), 8.2.4.1 Introduce a concentration of 40 to 60 ppmv NO_2 to the analyzer in direct calibration mode and record the NOx concentration displayed by the analyzer. ... Calculate the converter efficiency using Equation 7E-7 in Section 12.7. The specification for converter efficiency in Section 13.5 must be met. ... The NO_2 must be prepared according to the EPA Traceability Protocol and have an accuracy within 2.0 percent.

Audit Gas: NO_2 Concentration (C_v), ppmvd

Converter Efficiency Calculations:

Analyzer Reading, NO Channel, ppmvd

Analyzer Reading, NOx Channel, ppmvd

Analyzer Reading, NO_2 Channel ($C_{Dir(NO2)}$), ppmvd

Converter Efficiency, %

RM 7E, (08-15-06), 13.5 NO2 to NO Conversion Efficiency Test (as applicable). The NO2 to NO conversion efficiency, calculated according to Equation 7E-7 or Equation 7E-9, must be greater than or equal to 90 percent.

$$Eff_{NO2} = \left(\frac{C_{Dir}}{C_V}\right) \times 100$$

Eq. 7E-7 = _____ ppmvd / ppmvd x 100 =

Date/Time	Elapsed Time	NOx	NO
mm/dd/yy hh:mm:ss	Seconds	ppmvd	ppmvd

Fuel Data

Fuel F_o factor		SCF/MMBtu
Fuel Heating Value (HHV)		Btu/SCF

Weather Data

Barometric Pressure		in. Hg
Relative Humidity		%
Ambient Temperature		°F
Specific Humidity		lb H_2O / lb air

Unit Data

Unit Load		megawatts
Heat Input		lb/MMBtu
Steam Rate		Steam lb/hr
Combustor Inlet Pres.		psig
NOx Control Water Injection		gpm
Est. Stack Moisture		%
Stack Exhaust Flow (M2)		SCFH
Stack Exhaust Flow (M19)		SCFH

Run - 1

Date/Time (mm/dd/yy hh:mm:ss)	Elapsed Time (seconds)	O_2 (%)	NOx (ppmvd)	CO (ppmvd)

RAW AVERAGE

		O_2	NOx	CO
	Serial Number:			
		(%)	(ppmvd)	(ppmvd)
Bias	Initial Zero			
	Final Zero			
	Avg. Zero			
	Initial UpScale			
	Final UpScale			
	Avg. UpScale			

Upscale Cal Gas

EMISSIONS DATA	O_2	NOx	CO
Corrected Raw Average (ppm/% dry basis)			
Corrected Raw Average (ppm/% wet basis)			
Concentration (ppm@ %O_2)			
Concentration (ppm@ %O_2 &ISO)			
Emission Rate (lb/hr)			
Emission Rate (tons/day) at 24 hr/day			
Emission Rate (tons/year) at 8760 hr/yr			
Emission Rate (lb/MMBtu)			
Emission Rate (g/hp*hr)			

DRIFT AND BIAS CHECK			
Run - 1	O2	NOx	CO
Raw Average			
Corrected Average			
Initial Zero			
Final Zero			
Avg. Zero			
Initial UpScale			
Final UpScale			
Avg. UpScale			
Sys Resp (Zero)			
Sys Resp (Upscale)			
Upscale Cal Gas			
Initial Zero Bias			
Final Zero Bias			
Zero Drift			
Initial Upscale Bias			
Final Upscale Bias			
Upscale Drift			
Alternative Specification Abs Diff: Initial Zero			
Alternative Specification Abs Diff: Final Zero			
Alternative Specification Abs Diff: Initial Upscale			
Alternative Specification Abs Diff: Final Upscale			
Calibration Span			
3% of Range (drift)			
5% of Range (bias)			

DRIFT AND BIAS CHECK			
Run - 2	O2	NOx	CO
Raw Average			
Corrected Average			
Initial Zero			
Final Zero			
Avg. Zero			
Initial UpScale			
Final UpScale			
Avg. UpScale			
Sys Resp (Zero)			
Sys Resp (Upscale)			
Upscale Cal Gas			
Initial Zero Bias			
Final Zero Bias			
Zero Drift			
Initial Upscale Bias			
Final Upscale Bias			
Upscale Drift			
Alternative Specification Abs Diff: Initial Zero			
Alternative Specification Abs Diff: Final Zero			
Alternative Specification Abs Diff: Initial Upscale			
Alternative Specification Abs Diff: Final Upscale			
Calibration Span			
3% of Range (drift)			
5% of Range (bias)			

EMISSION CALCULATIONS SUMMARY TABLES

Company: **Date:**
Engine Tested: **Location:**
Engine Serial #:

Stack Gas Flow Rate: Method 19

Test #	Brake Horsepower	O_2 Conc. (%)	Fuel Heating Value (Btu/SCF)	F Factor-Dry Oxy. (DSCFex/MMBtu)	Fuel Flow (SCF/hr)	Stack Flow (SCF/hr)
1						
2						
3						
Average						

NOx Mass Emission Rate

Test #	Brake Horsepower	NOx Conc. (ppmvd)	MW	E (g/hp*hr)	E (lb/hr)	E (ton/yr)	E (lb/MMBtu)
1			46.01				
2			46.01				
3			46.01				
Average			**46.01**				

CO Mass Emission Rate

Test #	Brake Horsepower	CO Conc. (ppmvd)	MW	E (g/hp*hr)	E (lb/hr)	E (ton/yr)	E (lb/MMBtu)
1			28.00				
2			28.00				
3			28.00				
Average			**28.00**				

Fuel Flow (Btu/hp•hr) is based upon the worst case assumption of 8,500 Btu/hp•hr fuel usage when site data for fuel flow is not available.

TABLE 2.1: ENGINE EMISSIONS REPORT

Test Period:				Air Permit Number:	
Location:				Unit Number:	
Date:				Suction Pressure (psi):	
Project Number:				Discharge Pressure (psi):	
Engine Manufacturer:				Stack Exhaust Temperature (°F):	
Engine Model:				Rated Horsepower (hp):	
Engine Serial Number:				Brake Horsepower (bhp):	
Analyzer Manufacturers:	TECO(NOx), API(CO), TECO(THC)			Engine Fuel Flow (SCFH):	
Analyzer Model Numbers:	42H, 300, 51			Specific Gravity:	
Date Analyzers Calibrated:				Fuel Heating Value [HHV] (Btu/SCF):	
Emission Test Results:	Appendix A			BSFC (Btu/hp*hr):	
Analyzer Data Plots:	Appendix B			Annual Hours Allowed to Operate:	8,760
Cal Gas Spec. Sheets:	Appendix C			Engine Speed (rpm):	
Quality Control Data Sheets:	Appendix D			Air Manifold Temp (°F):	
Chromatograph Report:	Appendix E			Air Manifold Pressure (psi):	
Ambient Temperature (°F):				Turbo Speed (rpm):	
Barometric Pressure (in. Hg):				Engine Ignition Timing (°BTDC):	
Relative Humidity (%):				Load Step:	
Emission Test Results				Torque (%):	
Pollutant (units)	Stack Test Results	Permit Limits	Passing	Tested By: Air Hygiene International, Inc.	
NOx (avg. ppmvd)					
CO (avg. ppmvd)					
VOC (avg. ppmvd)					
NOx @15%O_2 O_2 (avg. ppmvd)					
CO @15%O_2 O_2 (avg. ppmvd)					
VOC @15%O_2 O_2 (avg. ppmvd)					
NOx (avg. lb/hr)					
CO (avg. lb/hr)					
VOC (avg. lb/hr)					
NOx (avg. g/hp*hr)					
CO (avg. g/hp*hr)					
VOC (avg. g/hp*hr)					

All testing conducted according to United States Environmental Protection Agency (EPA), Methods: 7e, 10 and 25a.

EXAMPLE CALCULATIONS (FFACTOR)

RM 19, (07-19-06),
2.0 Summary of Method,
2.1 Emission Rates. Oxygen (O_2) or carbon dioxide (CO_2) concentrations and appropriate F factors (ratios of combustion gas volumes to heat inputs) are used to calculate pollutant emission rates from pollutant co

RM 19, (07-19-06),
12.2 Emission Rates of PM, SO2, and NOx. Select from the following sections the applicable procedure to compute the PM, SO2, or NOx emission rate (E) in lb/MMBtu. The pollutant concentration must be in lb/scf and the F factor must be in scf/MMBtu. If the pollutant concentration (C) is not in the appropriate units, use Table 19–1 in Section 17.0 to make the proper conversion. An F factor is the ratio of the gas volume of the products of combustion to the heat content of the fuel. The dry F factor (F_d) includes all components of combustion less water, the wet F factor (F_w) includes all components of combustion, and the carbon F factor (F_c) includes only carbon dioxide.

Mark's Std Hdbk, 10th ed.,pg 4-26
High Heat Value Dry (HHV_{dry}), calc for Methane (single component for the fuel gas)

$$HHV_{dry}(Btu/SCF) = \left[\left(\frac{M_{\%}}{100}\right) \times GCM\right]$$

HHV_{dry} = % / 100.00 x Btu / SCF = Btu / SCF

Mark's Std Hdbk, 10th ed., pg 4-26
Low Heat Value Dry (LHV_{dry}), calc for Methane (single component for the fuel gas)

$$LHV_{dry}(Btu/SCF) = \left[\left(\frac{M_{\%}}{100}\right) \times NCM\right]$$

LHV_{dry} = % / 100.00 x Btu / SCF = Btu / SCF

Civil Eng. Ref. Man.,7th Ed.,pg 14-9/GPA Ref. Bulletin 181-86, App. C
High Heat Value Wet (HHV_{wet}), calc for entire sample (all components of the fuel gas)

$$HHV_{wet}(Btu/SCF) = \frac{HHV_{dry}}{W/D.factor}$$

HHV_{wet} = _____ Btu/SCF = Btu/SCF

Civil Eng. Ref. Man.,7th Ed.,pg 14-9/GPA Ref. Bulletin 181-86, App. C
Low Heat Value Wet (LHV_{wet}), calc for entire sample (all components of the fuel gas)

$$LHV_{wet}(Btu/SCF) = \frac{LHV_{dry}}{W/D.factor}$$

LHV_{wet} = _____ Btu/SCF = Btu/SCF

Lbs Component per Lb-Mol of Gas (CM), calc for Methane (single component for the fuel gas)

$$CM(lb/lb-mol) = \left[\left(\frac{M_{\%}}{100}\right) \times MW\right]$$

CM = % / 100.00 x lb / lb-mol = ____ lb/lb-mol

ASTM D 3588
Fuel Molecular Weight (MW_{Fuel})

$$MW_{Fuel}(lb/lb \cdot mol) = \left[\sum(CM)\right]$$

MW_{Fuel} = lb/lb-mol
\+ lb/lb-mol
\+ etc. = lb/lb-mol

Btu per Lb of Gas Gross (**GCV**)

$$GCV(Btu/lb) = \left[\frac{HHV_{dry} \times G}{MW_{Fuel}}\right]$$

GCV = Btu/SCF x ft^3/lbmol / lb/lb-mol = Btu/lb

ASTM D 3588 (SG)
Specific Gravity

$$SG = \left[\frac{MW_{Fuel}}{MW_{AIR}}\right]$$

SG = lb/lb-mol / 28.96 lb/lb-mol
=

Btu per Lb of Gas Net (**NCV**)

$$NCV(Btu/lb) = \left[\frac{LHV_{dry} \times G}{MW_{Fuel}}\right]$$

NCV = Btu/SCF x ft^3/lbmol / lb/lb-mol = Btu/lb

Weight Percent of Component ($C_{\%}$), methane

$$C_{\%}(\%) = \left[\left(\frac{CM}{MW_{Fuel}}\right) \times 100\right]$$

$C_{\%}$ = lb/lb-mol / lb/lb-mol x 100 = %

RM 19, (07-19-06), **Weight Percent of Volatile Organic Compounds** ($VOC_{\%}$)

$$VOC_{\%}(\%) = \left[\sum_{C_3H_8}^{C_8H_{18}} M_{\%}\right]$$

$VOC_{\%}$ = % + % + % + etc. = %

RM 19, (07-19-06), 12.3.2 Determined **F Factors.** If the fuel burned is not listed in Table 19–2 or if the owner or operator chooses to determine an F factor rather than use the values in Table 19–2, use the procedure below: 12.3.2.1 Equations. Use the eq

RM 19, (07-19-6),
12.1 Nomenclature

K (scf/lb)/%	
H	3.64
C	1.53
S	0.57
N_2	0.14
O_2	0.46

$$F_d = \frac{K(K_{hd}\%H + K_c\%C + K_s\%S + K_n\%N - K_o\%O)}{GCV} \quad \text{Eq. 19-13}$$

F_d = 10^6Btu / MMBtu x [3.64 SCF / lb · % x % + 1.53 SCF / lb · % x % + 0.57 SCF / lb · % x % + 0.14 SCF / lb · % x % - 0.46 SCF / lb · % x %] x lb / Btu = SCF / MMBtu

Note: Lack of significant figures may cause rounding errors between actual calculations and example calculations.

EXAMPLE CALCULATIONS (INFORMATION)

Specific Humidity (RH_{sp})

Note: RHsp (gr/lb) calculated using temperature, relative humidity, and barometric pressure with psychrometric chart, psychrometric calculator, or built in psychrometric algorithm.

$$RH_{sp}(lb/lb) = \left[\left(\frac{gr}{lb}\right) \times \frac{lb}{7000\,gr}\right]$$

$$RH_{sp} = \frac{gr}{lb} \times \frac{1\ lb}{7000\ gr} = \frac{lb\ H_2O}{lb\ Air}$$

Fuel Flow Conversion (Q_f)

Note: Qf(lb/min) is a value uptained from the source operator.

$$Q_f = \left[Q_f \times G \times \left(\frac{1}{MW_{Fuel}}\right)\right]$$

$$Q_f = \frac{lb}{min} \times \frac{60\ min}{hr} \times \frac{ft^3}{lb\text{-}mol} \times \frac{lb\text{-}mol}{lb} = SCFH$$

Combustor Inlet Pressure / Compressor Discharge Pressure (CIP / CDP)
(corrected from gauge to atmospheric pres. and conv. to mm Hg.)

Note: CIP / CDP (psig) is a value obtained from the source operator.

$$CIP/CDP = \left[(psig + P) \times \frac{51.71493\ mmHg}{1\ psi}\right]$$

$$CIP/CDP = (\quad psig + \quad) \times \frac{51.71493\ mmHg}{1\ psia} = mmHg\ (abs)$$

Heat Rate (MMBtu/hr)

$$HR = \frac{HHV_{DRY} \times Q_f}{1{,}000{,}000}$$

$$Heat\ Rate = \frac{Btu}{SCF} \times \frac{SCF}{hr} \times \frac{MMBtu}{10^6\ Btu} = \frac{MMBtu}{hr}$$

Estimated Stack Gas Moisture Content (B_{ws})

$$B_{ws}(\%) = \frac{2 \times Q_f}{Q_s} \times 100$$

$$B_{ws} = 2 \times \frac{SCF}{hr} \times \frac{hr}{SCF} \times 100 = \%$$

Note: Lack of significant figures may cause rounding errors between actual calculations and example calculations.

EXAMPLE CALCULATIONS (CALIBRATION)

Analyzer Calibration Error

RM 7E, (08-15-06), 12.2 Analyzer Calibration Error. For non-dilution systems, use Equation 7E-1 to calculate the analyzer calibration error for the low-, mid-, and high-level calibration gases. (calc for analyzer mid gas, if applicable)

$$ACE = \left(\frac{C_{Dir} - C_V}{CS}\right) \times 100 \qquad \text{Eq. 7E-1}$$

$$ACE = \frac{ppm - \quad ppm}{ppm} \times 100 = \%$$

Calibration Error and Estimated Point, RM 25A, THC Analyzer

RM 25A, (07-19-06), 8.4 Calibration Error Test. Immediately prior to the test series (within 2 hours of the start of the test), introduce zero gas and high-level calibration gas at the calibration valve assembly. Adjust the analyzer output to the appropriate levels, if necessary. Calculate the predicted response for the low-level and mid-level gases based on a linear response line between the zero and high-level response. Then introduce low-level and mid-level calibration gases successively to the measurement system. ... These differences must be less than 5 percent of the respective calibration gas value. (calc for THC analyzer mid gas, if applicable)

$$E_p = \frac{C_{Dir(H)} - C_{Dir(Z)}}{C_{V(H)} - C_{V(Z)}} \times C_{Dir(M)} + C_{Dir(Z)}$$

Eq. of a line
y=mx+b

$$E_p = \frac{ppm - \quad ppm}{ppm - \quad ppm} \times \quad ppm + \quad = \quad ppm$$

$$ACE = \left(\frac{C_{Dir} - C_V}{CS}\right) \times 100 \qquad \text{Eq. 7E-1}$$

$$ACE_{THC} = \frac{ppm - \quad ppm}{ppm} \times 100 = \%$$

Note: Lack of significant figures may cause rounding errors between actual calculations and example calculations.

EXAMPLE CALCULATIONS (BIAS, DRIFT, AND CORRECTED RAW AVERAGE)

System Bias

RM 7E, (08-15-06), 12.3 System Bias. For non-dilution systems, use Equation 7E-2 to calculate the system bias separately for the low-level and upscale calibration gases. (calc for analyzer upscale gas, Run 1 initial bias, if applicable)

$$SB = \left(\frac{C_S - C_{Dir}}{CS}\right) \times 100$$ Eq. 7E-2

SB = (ppm - ppm) / ppm x 100 = %

Drift Assessment

RM 7E, (08-15-06), 12.5 Drift Assessment. Use Equation 7E-4 to separately calculate the low-level and upscale drift over each test run. (calc for analyzer upscale drift, Run 1, if applicable)

$$D = \left|SB_{final} - SB_i\right|$$ Eq. 7E-4

D = | % - % | = %

Alternative Drift and Bias

RM 7E, (08-15-06), 13.2 / 13.3 System Bias and Drift. Alternatively, the results are acceptable if |Cs – Cdir| is ≤ 0.5 ppmv or if |Cs – Cv| is ≤ 0.5 ppmv (as applicable). (calc for analyzer initial upscale, Run 1, if applicable)

$$SB / D_{Alt} = \left|C_S - C_{Dir}\right|$$ Eq. Section 13.2 and 13.3

SB / D_{Alt} = | ppm - ppm | = ppm

Bias Adjusted Average

RM 7E, (08-15-06), 12.6 Effluent Gas Concentration. For each test run, calculate Cavg, the arithmetic average of all valid concentration values (e.g., 1-minute averages). Then adjust the value of Cavg for bias, using Equation 7E-5. (calc for analyzer, Run 1, if applicable)

$$C_{Gas} = \left(C_{Avg} - C_O\right) \times \left(\frac{C_{Ma}}{C_M - C_O}\right)$$ Eq. 7E-5

C_{Gas} = (ppm - ppm) x (ppm / (ppm - ppm)) = ppm

EXAMPLE CALCULATIONS (BSFC)

Using LHV with Q_f (Btu/hp*hr)

$$BSFC\,(Btu / hp \cdot hr) = Q_f$$

BSFC = Btu / hp*hr = Btu / hp*hr

Using HHV with Q_f (SCFH)

$$BSFC\,(Btu / hp \cdot hr) = \frac{HHV \times Q_f}{bhp}$$

BSFC = Btu / SCF x SCF / hr x 1 / hp = Btu / hp*hr

Using LHV with Q_f (SCFH)

$$BSFC\,(Btu / hp \cdot hr) = \frac{LHV \times Q_f}{bhp}$$

BSFC = Btu / SCF x SCF / hr x 1 / hp = Btu / hp*hr

Using HHV with Q_f (Btu/hp*hr)

$$BSFC\,(Btu / hp \cdot hr) = \frac{Q_f \times HHV}{LHV}$$

BSFC = N/A Btu / hp*hr x Btu / SCF x scf / Btu = Btu / hp*hr

EXAMPLE CALCULATIONS (Emissions based on Table 29 values)

Emission Rate (lb/hr)
Q_f (Btu/hp*hr))

$$E(lb / hr) = \frac{E_{g/hp \cdot hr} \times bhp}{453.6}$$

E (lb/hr) = g / hp*hr x lb / 453.6 g x hp = lb / hr

Emission Rate (g/hp-hr)
Q_f (Btu/hp*hr))

$$E(g / hp \cdot hr) = CRA \times Q_f \times FFactor \times MW \times \frac{1}{10^6} \times \frac{1}{10^6} \times \frac{453.6}{G} \times \frac{20.9\%}{20.9\% - CRA_{O_2}}$$

E (g/hp-hr) = ppm x Btu / hp*hr x SCF / MMBtu x lb / lb-mol x 1 parts / 10^6 ppm x 1 MMBtu / 10^6 Btu x 453.6 g / lb x lb-mol / SCF x 20.9% / (20.9% - %) = g / hp*hr

Note: Lack of significant figures may cause rounding errors between actual calculations and example calculations.

EXAMPLE CALCULATIONS (RUNS)

Stack Exhaust Flow (Q_S) - RM19

$$Q_S = \left(\frac{FFactor \times Q_f \times HHV}{1{,}000{,}000}\right) \times \left(\frac{20.9\%}{20.9\% - C_{Gas(O2)}}\right)$$

Q_S = SCF / MMBtu x SCF / hr x Btu / SCF x MMBtu / 10^6 Btu x [20.90% / (20.9% - %)] = SCFH

NO_2 Conversion Efficiency Correction

RM 7E, (08-15-06), 12.8 NO2 - NO Conversion Efficiency Correction. If desired, calculate the total NOX concentration with a correction for converter efficiency using Equations 7E-8. (calc for non-bias corrected (raw) NOx gas, Run 1, if applicable)

$$NOx_{Corr} = NO + \frac{NOx - NO}{Eff_{NO2}} \times 100 \qquad \text{Eq. 7E-8}$$

NOx_{Corr} = ppm + (ppm - ppm) / % x 100 = ppm

Moisture Correction

RM 7E, (08-15-06), RM7E, (08-15-06), 12.10 Moisture Correction. Use Equation 7E-10 if your measurements need to be corrected to a dry basis. (calc for THC analyzer, Run 1, if applicable) Note: Calculations may not match as Run 1 results are typically also bias adjusted

$$C_D = \frac{C_W}{1 - B_{WS}} \qquad \text{Eq. 7E-10}$$

C_D = ppmvw / 1 - = ppmvd

Diluent-Corrected Polutant Concentration, O_2 Based

RM 20, (11-26-02), 7.3.1 Correction of Pollutant Concentration Using O2 Concentration. Calculate the O2 corrected pollutant concentration, as follows: (calc for gas, Run 1, if applicable)

$$C_{adj} = C_{Gas(Target)} \times \left(\frac{20.9\% - AdjFactor}{20.9\% - C_{Gas(O2)}}\right) \qquad \text{Eq. 20-4}$$

C_{adj} = ppm x [(20.9% - %) / (20.9% - %)] = ppm@%O_2

Diluent-Corrected Polutant Concentration, CO_2 Based

RM 20, (11-26-02), 7.3.2 Correction of Pollutant Concentration Using CO2 Concentration. Calculate the CO2 corrected pollutant concentration, as follows: (calc for gas, Run 1, if applicable)

$$C_{adj} = C_{Gas(Target)} \times \frac{X_{CO2}}{C_{Gas(CO2)}} \qquad \text{Eq. 20-5}$$

C_{adj} = ppm x % / % =

7.2 CO_2 Correction Factor. If pollutant concentrations are to be corrected to percent O_2 and CO_2 concentration is measured in lieu of O_2 concentration measurement, a CO_2 correction factor is needed. Calculate the CO_2 correction factor as follows: 7.2.1 Calculate the fuel specific F_o, as follows:

$$F_0 = \frac{0.209 F_d}{F_c} \qquad \text{Eq. 20-2}$$

F_0 = 0.209 x SCF/MMBtu / SCF/MMBtu =

7.2.2. Calculate the CO_2 correction factor for correcting measurement data to percent oxygen, as follows:

$$X_{CO2} = \frac{20.9\% - AdjFactor}{F_0} \qquad \text{Eq. 20-3}$$

X_{CO2} = 20.9% - % = %

Diluent-Corrected Polutant Concentration Corrected to ISO Conditions

40CFR60.335(b)(1), Conversion for conc. at ISO Conditions (68°F, 1 atm). Calculate, as follows: (calc for @% with Run 1 data, if applicable)

$$C_{ISO} = C_{Adj} \times \sqrt{\frac{P_r}{P_o}} \times e^{(19 \times (H_o - 0.00633))} \times \left(\frac{288}{T_a}\right)^{1.53}$$

C_{ISO} = ppm@%O_2 x $\sqrt{\frac{\text{psig} + 14.69232 \text{ psi}}{0.01933677 \text{ psi/mm Hg.}} \Big/ \frac{\text{psig} + \text{ psi}}{0.01933677 \text{ psi/mm Hg.}}}$ x $2.718^{(19 \times (\text{lb/lb} - 0.00633))}$ x $\left(\frac{288 \text{ K}}{\text{K}}\right)^{1.53}$ = ppm@% and ISO

Note: Lack of significant figures may cause rounding errors between actual calculations and example calculations.

EXAMPLE CALCULATIONS (RUNS)

Emissions Rate (lb/hr)

Calculation for pound per hour emission rate. Calculate, as follows: (calc for gas Run 1, if applicable)

$$E_{lb/hr} = \frac{C_{Gas}}{10^6} \times \frac{Q_S \times MW}{G}$$

$$E_{lb/hr} = \frac{\text{ppm}}{10^6 \text{ ppm/part}} \times \frac{\text{SCFH} \times \text{lb/lb-mol}}{\text{SCF/lb-mol}} = \frac{\text{lb}}{\text{hr}}$$

Emissions Rate (ton/year)

Calculation for tons per year emission rate based on 8760 hours per year. Calculate, as follows: (calc for gas Run 1, if applicable)

$$E_{ton/yr} = \frac{E_{lb/hr} \times hr_{year}}{2000}$$

$$E_{ton/yr} = \frac{\text{lb}}{\text{hr}} \times \frac{\text{hr}}{\text{year}} \times \frac{\text{ton}}{2000 \text{ lb}} = \frac{\text{ton}}{\text{year}}$$

Emissions Rate (lb/MMBtu)

RM 19, (07-19-06), 12.2 Emission Rates of PM, SO2, and NOx. Select from the following sections the applicable procedure to compute the PM, SO2, or NOx emission rate (E) in ng/J (lb/million Btu). (calc for gas Run 1, if applicable)

Oxygen Based

12.2.1 Oxygen-Based F Factor, Dry Basis. When measurements are on a dry basis for both O_2 (%O_2d) and pollutant (Cd) concentrations, use the following equation:

$$E_{lb/MMBtu} = \frac{C_{Gas} \times F_d Factor \times Conv_C \times 20.9\%}{20.9\% - C_{Gas(O2)}} \qquad \text{Eq. 19-1}$$

$$E_{lb/MMBtu} = \frac{\text{ppm} \times \text{SCF/MMBtu} \times \text{lb/ppm*ft}^3 \times 20.9\%}{20.9\% - \%} = \frac{\text{lb}}{\text{MMBtu}}$$

Carbon Dioxide Based

12.2.4 Carbon Dioxide-Based F Factor, Dry Basis. When measurements are on a dry basis for both CO_2 (%CO_2d) and pollutant (Cd) concentrations, use the following equation:

$$E_{lb/MMBtu} = \frac{C_{Gas} \times F_d Factor \times Conv_C \times 100\%}{C_{Gas(CO2)}} \qquad \text{Eq. 19-6}$$

$$E_{lb/MMBtu} = \frac{\text{ppm} \times \text{SCF/MMBtu} \times \text{lb/ppm*ft}^3 \times 100\%}{\%} = \frac{\text{lb}}{\text{MMBtu}}$$

Conversion Constant

Convc for

$$Conv_c(lb/ppm \cdot ft^3) = \frac{\frac{MW}{G}}{10^6}$$

$$Conv_c = \frac{\frac{\text{lb}}{\text{lb•mole}} \times \frac{\text{lb•mole}}{\text{SCF}}}{10^6} = \frac{\text{lb}}{\text{ppm-ft}^3}$$

Sulfur Dioxide Rate (lb/MMBtu), 40CFR60, App. A, RM 19, Eq. 19-25 (11/20/03)

$$SO_2(lb/MMBtu) = 0.97 \times K \times \frac{S(wt\%)}{GCV}$$

$$SO_2 = 0.97 \times \frac{2\text{x}10^4 \text{ Btu}}{\text{wt\%•MMBtu}} \times \frac{\text{wt\%}}{\text{Btu/lb}} = \frac{\text{lb}}{\text{MMBtu}}$$

Emissions Rate (g/hp-hr)

Calculation for grams per horsepower-hour. Calculate, as follows: (calc for gas Run 1, if applicable)

$$E_{g/hp\text{-}hr} = \frac{E_{lb/hr} \times 453.6}{mw \times 1314.022} \text{ or } \frac{E_{lb/hr} \times 453.6}{hp}$$

$$E_{g/hp\text{-}hr} = \frac{\text{lb}}{\text{hr}} \times \frac{453.6 \text{ g}}{\text{lb}} \times \frac{1}{\text{mw}} \times \frac{\text{mw}}{1314.022 \text{ hp}} = \frac{\text{g}}{\text{hp*hr}}$$

$$E_{g/hp\text{-}hr} = \frac{\text{lb}}{\text{hr}} \times \frac{453.6 \text{ g}}{\text{lb}} \times \frac{1}{\text{hp}} = \frac{\text{g}}{\text{hp*hr}}$$

Note: Lack of significant figures may cause rounding errors between actual calculations and example calculations.

EXAMPLE CALCULATIONS (FTIR SPIKE)

Concentration to dilute by 90% (ppmvw)

$$AVG_d = \frac{AVG_r}{2}$$

AVG_d = $\frac{\text{ppmvw}}{2}$ = ppmvw

Ideal matrix spike yield (ppmvw)

$$Y_{ideal} = AVG_d \times \left(\frac{Q_m}{Q_{sys}}\right) + AVG_r \times \left(1 - \frac{Q_m}{Q_{sys}}\right)$$

Y_{ideal} = ppmvw x $\left(\frac{\text{lpm}}{\text{lpm}}\right)$ + ppmvw x $\left(1 - \frac{\text{lpm}}{\text{lpm}}\right)$ = ppmvw

Minimum matrix spike yield (ppmvw)

$$Y_{min} = Y_{ideal} \times 0.7$$

Y_{ideal} = ppmvw x 0.7 = ppmvw

Maximum matrix spike yield (ppmvw)

$$Y_{max} = Y_{ideal} \times 1.3$$

Y_{ideal} = ppmvw x 1.3 = ppmvw

Note: Lack of significant figures may cause rounding errors between actual calculations and example calculations.

RM 7E, (08-15-06), 12.1 Nomenclature. The terms used in the equations are defined as follows:

ACE = Analyzer calibration error, percent of calibration span.
B_{WS} = Moisture content of sample gas as measured by Method 4 or other approved method, percent/100.
C_{Avg} = Average unadjusted gas concentration indicated by data recorder for the test run.
C_D = Pollutant concentration adjusted to dry conditions.
C_{Dir} = Measured concentration of a calibration gas (low, mid, or high) when introduced in direct calibration mode.
C_{Gas} = Average effluent gas concentration adjusted for bias.
C_M = Average of initial and final system calibration bias (or 2-point system calibration error) check responses for the upscale calibration gas.
C_{MA} = Actual concentration of the upscale calibration gas, ppmv.
C_O = Average of the initial and final system calibration bias (or 2-point system calibration error) check responses from the low-level (or zero) calibration gas.
C_S = Measured concentration of a calibration gas (low, mid, or high) when introduced in system calibration mode.
C_{SS} = Concentration of NOx measured in the spiked sample.
C_{Spike} = Concentration of NOx in the undiluted spike gas.
C_{Calc} = Calculated concentration of NOx in the spike gas diluted in the sample.
C_V = Manufacturer certified concentration of a calibration gas (low, mid, or high).
C_W = Pollutant concentration measured under moist sample conditions, wet basis.
CS = Calibration span.
D = Drift assessment, percent of calibration span.
E_p = The predicted response for the low-level and mid-level gases based on a linear response line between the zero and high-level response.
Eff_{NO2} = NO_2 to NO converter efficiency, percent.
H = High calibration gas, designator.
L = Low calibration gas, designator.
M = Mid calibration gas, designator.
NOFinal = The average NO concentration observed with the analyzer in the NO mode during the converter efficiency test in Section 16.2.2.
NOxCorr = The NOx concentration corrected for the converter efficiency.
NOxFinal = The final NOx concentration observed during the converter efficiency test in Section 16.2.2.
NOxPeak = The highest NOx concentration observed during the converter efficiency test in Section 16.2.2.
Q_{Spike} = Flow rate of spike gas introduced in system calibration mode, L/min.
Q_{Total} = Total sample flow rate during the spike test, L/min.
R = Spike recovery, percent.
SB = System bias, percent of calibration span.
SB_i = Pre-run system bias, percent of calibration span.
SB_f = Post-run system bias, percent of calibration span.
SB / D_{Alt} = Alternative absolute difference criteria to pass bias and/or drift checks.
SCE = System calibration error, percent of calibration span.
SCE_i = Pre-run system calibration error, percent of calibration span.
SCE_{final} = Post-run system calibration error, percent of calibration span.
Z = Zero calibration gas, designator.

40CFR60.355(b)(1), (09-20-06), Nomenclature. The terms used in the equations are defined as follows:

P_r = reference combustor inlet absolute pressure at 101.3 kilopascals ambient pressure, mm Hg
P_o = observed combustor inlet absolute pressure at test, mm Hg
H_o = observed humidity of ambient air, g H_2O/g air
e = transcendental constant, 2.718
T_a = ambient temperature, K

Small Engine and FTIR Nomenclature. The terms used in the equations are defined as follows:

bhp = brake horsepower
hp = horsepower
Q_{sys} = system flow (lpm)
Q_m = matrix spike flow (lpm)

RM 19, (07-29-06), 12.1 Nomenclature. The terms used in the equations are defined as follows:

AdjFactor = percent oxygen or carbon dioxide adjustment applied to a target pollutant
B_{wa} = Moisture fraction of ambient air, percent.
Btu = British thermal unit
$\%_C$ = Concentration of carbon from an ultimate analysis of fuel, weight percent.
$\%_{CO2d}, \%_{CO2w}$ = Concentration of carbon dioxide on a dry and wet basis, respectively, percent.
CIP / CDP = Combustor inlet pressure / compressor discharge pressure (mm Hg); note, some manufactures reference as PCD.
E = Pollutant emission rate, ng/J (lb/million Btu).
E_a = Average pollutant rate for the specified performance test period, ng/J (lb/million Btu).
E_{ao}, E_{ai} = Average pollutant rate of the control device, outlet and inlet, respectively, for the performance test period, ng/J (lb/million Btu).
E_{bi} = Pollutant rate from the steam generating unit, ng/J (lb/million Btu).
E_{bo} = Pollutant emission rate from the steam generating unit, ng/J (lb/million Btu).
E_{ci} = Pollutant rate in combined effluent, ng/J (lb/million Btu).
E_{co} = Pollutant emission rate in combined effluent, ng/J (lb/million Btu).
E_d = Average pollutant rate for each sampling period (e.g.,24-hr Method 6B sample or 24-hr fuel sample) or for each fuel lot (e.g., amount of fuel bunkered), ng/J (lb/million Btu).
E_{di} = Average inlet SO_2 rate for each sampling period d, ng/J (lb/million Btu).
E_g = Pollutant rate from gas turbine, ng/J (lb/million Btu).
E_{ga} = Daily geometric average pollutant rate, ng/J (lbs/million Btu) or ppm corrected to 7 percent O_2.
E_{jo}, E_{ji} = Matched pair hourly arithmetic average pollutant rate, outlet and inlet, respectively, ng/J (lb/million Btu) or ppm corrected to 7 percent O_2.
E_h = Hourly average pollutant, ng/J (lb/million Btu).
E_{hj} = Hourly arithmetic average pollutant rate for hour "j," ng/J (lb/million Btu) or ppm corrected to 7 percent O_2.
EXP = Natural logarithmic base (2.718) raised to the value enclosed by brackets.
Fc = Ratio of the volume of carbon dioxide produced to the gross calorific value of the fuel from Method 19
F_d, F_w, F_o = Volumes of combustion components per unit of heat content, scm/J (scf/million Btu).
ft^3 = cubic feet
G = ideal gas conversion factor
(385.23 SCF/lb-mol at 68 deg F & 14.696 psia)
GCM = gross Btu per SCF (constant, compound based)
GCV = Gross calorific value of the fuel consistent with the ultimate analysis, kJ/kg (Btu/lb).
GCV_p, GCV_r = Gross calorific value for the product and raw fuel lots, respectively, dry basis, kJ/kg (Btu/lb).
$\%_H$ = Concentration of hydrogen from an ultimate analysis of fuel, weight percent.
H_b = Heat input rate to the steam generating unit from fuels fired in the steam generating unit, J/hr (million Btu/hr).
H_g = Heat input rate to gas turbine from all fuels fired in the gas turbine, J/hr (million Btu/hr).
$\%_{H2O}$ = Concentration of water from an ultimate analysis of fuel, weight percent.
H_r = Total numbers of hours in the performance test period (e.g., 720 hours for 30-day performance test period).
K = volume of combustion component per pound of component (constant)
K = Conversion factor, 10^{-5} (kJ/J)/(%) [10^6 Btu/million Btu].
K_c = (9.57 scm/kg)/% [(1.53 scf/lb)/%].
K_{co} = (2.0 scm/kg)/% [(0.321 scf/lb)/%].
K_{hd} = (22.7 scm/kg)/% [(3.64 scf/lb)/%].
K_{hw} = (34.74 scm/kg)/% [(5.57 scf/lb)/%].
K_n = (0.86 scm/kg)/% [(0.14 scf/lb)/%].
K_o = (2.85 scm/kg)/% [(0.46 scf/lb)/%].
K_s = (3.54 scm/kg)/% [(0.57 scf/lb)/%].
K_{sulfur} = $2x10^4$ Btu/wt%-MMBtu
K_w = (1.30 scm/kg)/% [(0.21 scf/lb)/%].
lb = pound
ln = Natural log of indicated value.
L_p, L_r = Weight of the product and raw fuel lots, respectively, metric ton (ton).
$\%_N$ = Concentration of nitrogen from an ultimate analysis of fuel, weight percent.
$M_{\%}$ = mole percent
mol = mole
MW = molecular weight (lb/lb-mol)
MW_{AIR} = molecular weight of air (28.9625 lb/lb-mole)[1]
NCM = net Btu per SCF (constant based on compound)
$\%_O$ = Concentration of oxygen from an ultimate analysis of fuel, weight percent.
$\%_{O2d}$, $\%_{O2w}$ = Concentration of oxygen on a dry and wet basis, respectively, percent.
P_B = barometric pressure, in Hg
P_s = Potential SO2 emissions, percent.
$\%_S$ = Sulfur content of as-fired fuel lot, dry basis, weight percent.
S_e = Standard deviation of the hourly average pollutant rates for each performance test period, ng/J (lb/million Btu).
$\%_{Sf}$ = Concentration of sulfur from an ultimate analysis of fuel, weight percent.
S(wt%) = weight percent of sulfur, per lab analysis by appropriate ASTM standard
S_i = Standard deviation of the hourly average inlet pollutant rates for each performance test period, ng/J (lb/million Btu).
S_o = Standard deviation of the hourly average emission rates for each performance test period, ng/J (lb/million Btu).
$\%S_p$, $\%S_r$ = Sulfur content of the product and raw fuel lots respectively, dry basis, weight percent.
SCF = standard cubic feet
SH = specific humidity, pounds of water per pound of air
$t_{0.95}$ = Values shown in Table 19-3 for the indicated number of data points n.
T_{amb} = ambient temperature, °F
W/D Factor = 1.0236 = conv. at 14.696 psia and
68 deg F (ref. Civil Eng. Ref. Manual, 7th Ed.)
X_{CO2}=CO_2 Correction factor, percent.
X_k = Fraction of total heat input from each type of fuel k.

Calculations, Formulas, and Constants

The following information supports the spreadsheets for this testing project.

Given Data:

Ideal Gas Conversion Factor = 385.23 SCF/lb-mol at 68 deg F & 14.696 psia

Fuel Heating Value is based upon Air Hygiene's fuel gas calculation sheet. All calculations are based upon a correction to 68 deg F & 14.696 psia

High Heating Values (HHV) are used for the Fuel Heating Value, F-Factor, and Fuel Flow Data per EPA requirements.

ASTM D 3588

Molecular Weight of NOx (lb/lb-mole) =	46.01
Molecular Weight of CO (lb/lb-mole) =	28.00
Molecular Weight of SO2 (lb/lb-mole) =	64.00
Molecular Weight of THC (propane) (lb/lb-mole) =	44.00
Molecular Weight of VOC (methane) (lb/lb-mole) =	16.00
Molecular Weight of NH3 (lb/lb-mole) =	17.03
Molecular Weight of HCHO (lb/lb-mole) =	30.03

40CFR60, App. A., RM 19, Table 19-1

Conversion Constant for NOx =	0.0000001194351
Conversion Constant for CO =	0.0000000726839
Conversion Constant for SO2 =	0.0000001661345
Conversion Constant for THC =	0.0000001142175
Conversion Constant for VOC (methane) =	0.0000000415336
Conversion Constant for NH_3 =	0.0000000442074
Conversion Constant for HCHO =	0.0000000779534

NOTE: units are lb/ppm*ft^3

Formulas:

1. Corrected Raw Average (C_{Gas}), 40CFR60, App. A, RM 7E, Eq. 7E-5 (08/15/06)

$$C_{Gas} = \left(C_{Avg} - C_O\right) \times \left(\frac{C_{MA}}{C_M - C_O}\right)$$

2. Correction to % O_2, 40CFR60, App. A, RM 20, Eq. 20-5 (11/26/02)

$$C_{adj} = C_{Gas(Target)} \times \left(\frac{20.9\% - AdjFactor}{20.9\% - C_{Gas(O2)}}\right)$$

3. Emission Rate in lb/hr

$$E_{lb/hr} = \frac{C_{Gas}}{10^6} \times \frac{Q_S \times MW}{G}$$

4. Emission Concentration in lb/MMBtu (O_2 based)

$$E_{lb/MMBtu} = \frac{C_{Gas} \times F_d Factor \times Conv_C \times 20.9\%}{20.9\% - C_{Gas(O2)}}$$

5. Emission Concentration in lb/MMBtu (CO_2 based)

$$E_{lb/MMBtu} = \frac{C_{Gas} \times F_d Factor \times Conv_C \times 100\%}{C_{Gas(CO2)}}$$

RATA SHEET CALCULATIONS

d = Reference Method Data - CEMS Data

S_d = Standard Deviation

CC = Confident Coefficient

n = number of runs

$t_{0.025}$ = 2.5 percent confidence coefficent T-values

RA = relative accuracy

ARA = alternative relative accuracy

BAF = Bias adjustment factor

n	t	n	t	n	t
2	12.706	7	2.447	12	2.201
3	4.303	8	2.365	13	2.179
4	3.182	9	2.306	14	2.160
5	2.776	10	2.262	15	2.145
6	2.571	11	2.228	16	2.131

1. Difference

$$d = \sum_{i=1}^{n} d_i$$

2. Standard Deviation

$$S_d = \sqrt{\frac{\sum_{i=1}^{n} d_i^2 - \left[\frac{\left(\sum_{i=1}^{n} d_i\right)^2}{n}\right]}{n-1}}$$

3. Confident Coefficient

$$CC = t_{0.025} \times \frac{S_d}{\sqrt{n}}$$

4. Relative Accuracy

$$RA = \frac{|d_{AVG}| + |CC|}{RM_{AVG}} \times 100$$

5. Alternative Relative Accuracy

$$ARA = \frac{|d_{AVG}| + |CC|}{AS} \times 100$$

5. Bias Adjustment Factor

$$BAF = 1 + \left(\frac{|d_{AVG}|}{CEM_{AVG}}\right)$$

APPENDIX E

STATEMENT OF QUALIFICATIONS

STATEMENT OF QUALIFICATIONS - 2012

AIR HYGIENE, INC.

Testing Solutions for a Better World

Corporate Headquarters:
1600 West Tacoma Street
Broken Arrow, OK 74012

(918) 307-8865
(888) 461-8778

AIR HYGIENE, INC.

Remote Office Locations:
Las Vegas, NV 89156
Ft. Worth, TX 76028
Humble, TX 77338
Shreveport, LA 71115
Philadelphia, PA 19136

WWW.AIRHYGIENE.COM

Follow us on Twitter @AirHygiene

Cimarex Energy Co.
202 S. Cheyenne Ave. Suite 1000
Tulsa, Oklahoma 74103-3001
MAIN 918.585.1100
FAX 918.585.1133

AI/AL/CO

CIMAREX

RECEIVED

Air/Toxics & Inspection
Coordination Branch
6EN-A

Certified Mail (7013 3020 0001 1498 8056)

April 18, 2014

Lorinda Gardner, Director
TCEQ Region 7
Texas Commission on Environmental Quality
9900 W. IH-20, Ste. 100
Midland, TX 79706

Re: 30-day Advance Notification of Intent to Conduct Performance Test
Reeves and Ward Counties, Texas
Cimarex Energy Co: Livingston 2-12 1H, Narrow 6-21 2H, Sluice Box 4-2 1H, Big Sky 55-16 1H, Pitzer Johnson State Unit 1H
TCEQ CN601706302
TCEQ RN106864671 (Narrow), 106874704 (Sluice), 106871064 (Big Sky), 106873847 (Pitzer)

Dear Ms. Gardner:

Pursuant to 40 CFR §60.8(d), Cimarex Energy Co. (Cimarex) is hereby providing 30-day advance notification of intent to conduct a performance test to afford the agency an opportunity to have an observer present. Cimarex proposes to conduct performance tests on or about the week of May 19, 2014.

Cimarex proposes to conduct performance tests on six (6) compressor engines located at the oil and gas production facilities referenced above. The performance tests will be conducted in accordance with the requirements of 40 CFR 60 Subpart JJJJ. Enclosed, please find the testing protocols for these engines.

Should you or members of your staff have any questions or require additional information, please contact me at (918) 560-7073 or via email at aaraiza@cimarex.com.

Sincerely,
Cimarex Energy Co.

Adrian Araiza

Adrian Araiza
Manager – Air Quality/Compliance

Enclosures (5) – 40 CFR 60 Subpart JJJJ Sampling Plans

cc: Director, Air, Pesticides and Toxics, EPA Region 6
Certified Mail (7013 3020 0001 1498 8063)

Kelly Gayneaux, Kermit Production Manager, Cimarex Energy Co., Midland, TX

Nick Koch, Kermit Production Superintendent, Cimarex Energy Co., Midland, TX

Air Quality Library File: AQ-07-01 (PBTX Testing Notification)

Performance Test Plan
40 CFR Part 60, Subpart JJJJ

Source: Livingston 2-12 1H
Make: Caterpillar
Model: 3306 NA

Location: Reeves County, TX.

Prepared on behalf of:

Cimarex Energy Co.

Prepared by:

Great Plains Analytical Services
303 West 3rd Street
Elk City, OK 73644

Table of Contents

1.0	Introduction	1
2.0	Test Information	1
3.0	Emission Point Information	2
4.0	Quality Control Information	3
	4.1 Pre-Test Procedures	3
5.0	Test Runs and Duration	5
6.0	Post-test Quality Assurance	5
7.0	Additional Information and Reporting	5
8.0	Health and Safety Concerns	6
9.0	Process Flow Diagram	6

Figure(s)

Figure 1: Test Specific Target Analytes and Data Quality Objectives

Figure 2: Measurement System Capabilities

Figure 3: Emission Flow and Sample Schematic

1.0 INTRODUCTION

The purpose of this test plan is to document the test methods and procedures that will be employed to collect and analyze exhaust gas emissions during performance testing of reciprocating internal combustion engines fueled by natural gas. The test will be conducted by:

Great Plains Analytical Services
303 West 3rd Street
Elk City, OK 73644
Contact: Tyson Milner
(580) 225-0403

2.0 TEST INFORMATION

This plan was developed for the following reciprocating internal combustion engine (source) at the following location:

Livingston 2-12 1H
Make: Caterpillar
Model: 3306 NA
SN: R6S01461
HP: 145
Manufacture Date: 10/1/13

Location: Reeves County, Texas

The test will be conducted using a multi component gas analyzer that incorporates a Fourier Transform Infrared (FTIR) spectrometer. FTIR is the state of the art technology. It is designed to military specifications and allows simple calibration using only single component calibration gases.

Exhaust emission gas concentrations will be collected and analyzed following the Environmental Protection Agency (EPA) Method 1A, Method 2, Method 2A, Method 3A and ASTM D6348-12.

Information provided in Figures 1 and 2 consists of background data collected from the FTIR during initial bench scale testing from a natural gas fired internal combustion engine. This is provided to demonstrate the FTIR's analytical and quality assurance capabilities.

Method Synopsis

ASTM D6348-12

This extractive FTIR based field test method is used to quantify gas phase concentrations of multiple target analytes from stationary source effluent. Because an FTIR analyzer is potentially capable of analyzing hundreds of compounds, this test method is not analyte or source specific. The analytes, detection levels, and data quality objectives are expected to change for any particular testing situation. It is the responsibility of the tester to define the target analytes, the associated detection limits for those analytes in the particular source effluent, and the required data quality objectives for each specific test program. Provisions are included in this test method that require the tester to determine critical sampling system and instrument operational parameters, and for the conduct of QA/QC procedures. Testers following this test method will generate data that will allow an independent observer to verify the valid collection, identification, and quantification of the subject target analytes.

EPA Method 1A

The purpose of the method is to provide guidance for the selection of sampling ports and traverse points at which sampling for air pollutants will be performed pursuant to regulations set forth in this part.

EPA Method 2

This method is applicable for the determination of the average velocity and the volumetric flow rate of a gas stream.

Method 3A

This is a procedure for measuring oxygen (O2) and carbon dioxide (CO2) in stationary source emissions using a continuous instrumental analyzer. Quality assurance and quality control requirements are included to assure that the tester collects data of known quality. Documentation to these specific requirements for equipment, supplies, sample collection and analysis, calculations, and data analysis will be included.

3.0 EMISSION POINT INFORMATION

Target Analytes

Exhaust emission testing will be conducted for the following compounds: carbon monoxide (CO), oxides of nitrogen (NOx), Volatile organic compounds (VOCs) and Oxygen (O2%).

Test Quality Objectives

Figure 1 summarizes the test quality objectives specific that will be used to evaluate test data to a known degree of accuracy.

Compounds	Infrared Analysis Region (cm^{-1})	Expected Concentration Range	Measurement System Achievable Minimum Detectable Concentrations	Required Measurement System Accuracy and Precision for Test Application
Target Analytes				
CO	200-2200	0-1200 ppm	0.14 ppm	4 ppm
NOx	1875-2138	0-300 ppm	0.20ppm	2 ppm
VOC	2700-2950	0-200 ppm	0.03 ppm	2 ppm
Interfering Compounds				
CO_2	870-1150	0-15%	0%	n/a
Water Vapor	3200-3401	0-25%	0.2%	n/a

Figure 1 Test Specific Target Analytes and Data Quality Objectives

Measured flue gas conditions at the sampling location including temperature, moisture content, and volumetric flow rate will be included in test results.

4.0 QUALITY CONTROL INFORMATION

4.1 Pre-Test Procedures

Pre-test procedures will be conducted prior to FTIR emission testing. Calibration sheets, calibration gases and any other test equipment will be made available prior to the start of testing. Upon completion of the assembled sampling system, a leak check will be conducted under pressure or partial vacuum conditions to ensure the integrity of the sample collection system.

Additional pre-test procedures will include:

- The introduction of nitrogen in order to collect the FTIR background;
- The acquisition of background spectrum;
- A system zero test will be conducted by directing nitrogen through the entire sampling system. The presence of a large amount of CO_2 and H_20 infrared spectral bands is indicative of system leakage;
- Determination of sample cell absorption path length by directing calibration transfer standard (CTS) gas directly through the absorption cell and acquiring its absorbance spectrum;
- A system mechanical response time test will be conducted by directing ethylene (CTS) through the entire system. The time required to reach 95% full scale reading of the CTS will be recorded;
- A system equilibration response time test will be conducted by introducing nitrogen through the entire sampling system;
- A system recovery check will be conducted by introducing a spike (acetaldehyde). The spike gas will be blended with sulfur hexafluoride (SF_6) at
- A known concentration to allow accurate quantification of the exact dilution factor and determination of sample recovery;

- A second system zero test will be conducted by directing nitrogen through the entire sampling system. Data will be recorded continuously until 95% of downscale reading is met. The time for the system to reach zero after exposure to the analyte will be recorded; and
- We will level and zero the incline manometer prior to each set of sample collections.

Data generated during the bench scale pre-test procedures will be presented in Figure 2 (please see section 3.0). Please note that Figure 2 will be presented in the final report with data collected from the actual field-testing source.

Parameter Measured	Gas	Concentration	Path Length	Equilibration Time	Dilution Factor	% Recovery
Path Length	Ethylene	101.2	4.93			
Mechanical Response Time	Ethylene	101.2		42		
System Response Time	Acetaldehyde	101.9		37		
Analyte Spike Recovery	Acetaldehyde	101.9		50	10	92
System Zero	Nitrogen			65		

Figure 2 Measurement System Capabilities

5.0 TEST RUNS AND DURATION

The FTIR integration time is capable of achieving 95% full scale reading (mechanical response time) quicker than most technology used today. Because of this unique feature, along with the pre-test protocols (listed in section 5.0), the unit becomes stabilized in approximately 15-20 minutes. A Great Plains Analytical Services JJJJ technician will collect three separate 1-hour test runs. The final reported analyte concentrations will be the average of each 1-hour test run. Quality control and quality assurance will be conducted prior to, during, and post testing to demonstrate the instrument's integrity and to ensure test result accuracy.

6.0 POST-TEST QUALITY ASSURANCE

Post test quality assurance will verify that the line positions have not shifted by more than 15% of the resolution, and the resolution has not changed by more than 15% of that determined before testing.

7.0 ADDITIONAL INFORMATION AND REPORTING

Additional parameters and atmospheric information will also be provided in the final report and will include:

- Barometric pressure, ambient temperature and volumetric flow;
- The percent moisture.

The final report will contain all field test data including all pre and post calibration information. Final concentrations will be reported in g/hp-hr, lbs/hr and tons/year. The report will also contain a description of the source process and airflow schematic, along with a schematic of the sampling system. Figure 3 represents a typical source and is included for illustrative purposes only.

8.0 HEALTH AND SAFETY CONCERNS

In accordance with 40 CFR Part 60.8, the client must provide safe access to the unit for testing and observance. Due to the nature of the source and the exposure to high temperatures, extreme caution will be observed in order to avoid contact with the unit which may result in burns and or inhalation of exhaust emissions.

Due to the remote location of the source unit, additional health & safety precautions will be observed such as avoidance of slips, trips, falls, and heat exhaustion.

9.0 PROCESS FLOW DIAGRAM

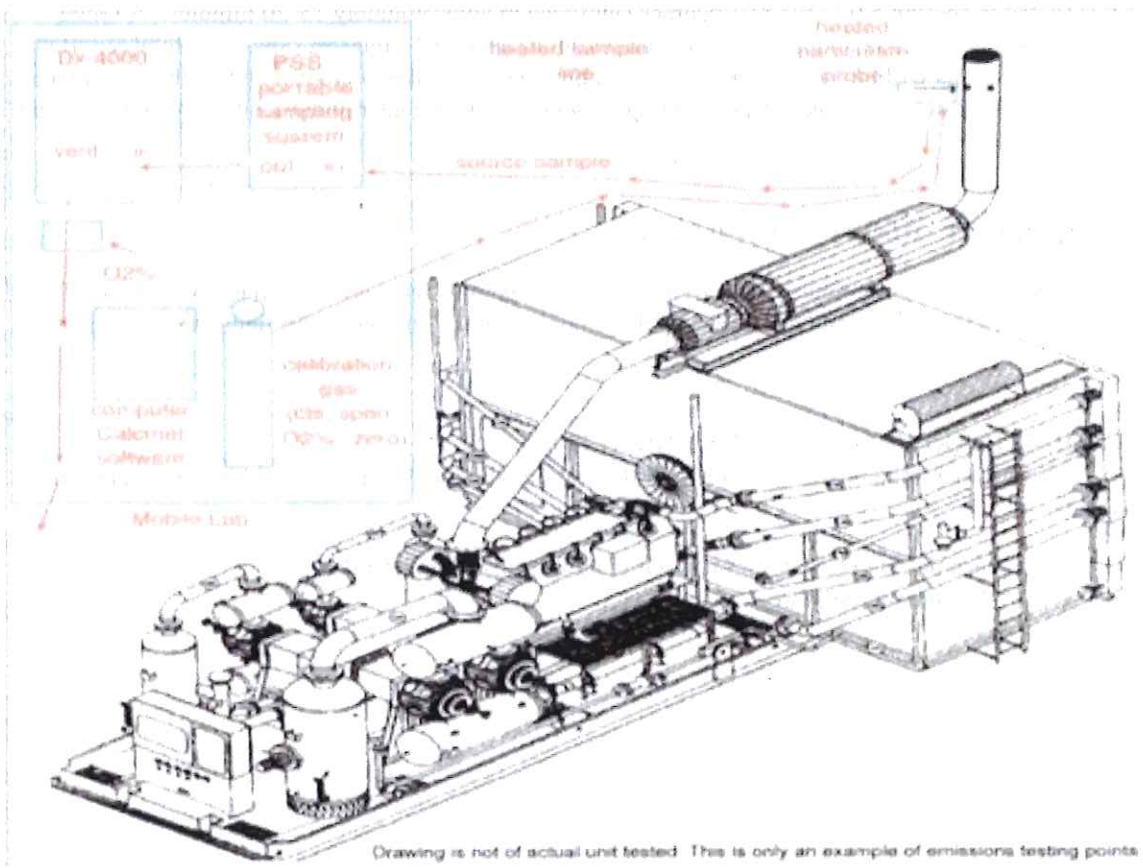

Performance Test Plan
40 CFR Part 60, Subpart JJJJ

Source: Narrow 6-21 2H
Make: Caterpillar
Model: 3306 NAB

Location: Reeves County, TX.

Prepared on behalf of:

Cimarex Energy Co.

Prepared by:

Great Plains Analytical Services
303 West 3rd Street
Elk City, OK 73644

Table of Contents

1.0	Introduction	1
2.0	Test Information	1
3.0	Emission Point Information	2
4.0	Quality Control Information	3
	4.1 Pre-Test Procedures	3
5.0	Test Runs and Duration	5
6.0	Post-test Quality Assurance	5
7.0	Additional Information and Reporting	5
8.0	Health and Safety Concerns	6
9.0	Process Flow Diagram	6

Figure(s)

Figure 1: Test Specific Target Analytes and Data Quality Objectives

Figure 2: Measurement System Capabilities

Figure 3: Emission Flow and Sample Schematic

1.0 INTRODUCTION

The purpose of this test plan is to document the test methods and procedures that will be employed to collect and analyze exhaust gas emissions during performance testing of reciprocating internal combustion engines fueled by natural gas. The test will be conducted by:

Great Plains Analytical Services
303 West 3rd Street
Elk City, OK 73644
Contact: Tyson Milner
(580) 225-0403

2.0 TEST INFORMATION

This plan was developed for the following reciprocating internal combustion engine (source) at the following location:

Narrow 6-21 2H
Make: Caterpillar
Model: 3306 NAB
SN: R6S02211
HP: 145
Manufacture Date: 2/19/14

Location: Reeves County, Texas

The test will be conducted using a multi component gas analyzer that incorporates a Fourier Transform Infrared (FTIR) spectrometer. FTIR is the state of the art technology. It is designed to military specifications and allows simple calibration using only single component calibration gases.

Exhaust emission gas concentrations will be collected and analyzed following the Environmental Protection Agency (EPA) Method 1A, Method 2, Method 2A, Method 3A and ASTM D6348-12.

Information provided in Figures 1 and 2 consists of background data collected from the FTIR during initial bench scale testing from a natural gas fired internal combustion engine. This is provided to demonstrate the FTIR's analytical and quality assurance capabilities.

Method Synopsis

ASTM D6348-12

This extractive FTIR based field test method is used to quantify gas phase concentrations of multiple target analytes from stationary source effluent. Because an FTIR analyzer is potentially capable of analyzing hundreds of compounds, this test method is not analyte or source specific. The analytes, detection levels, and data quality objectives are expected to change for any particular testing situation. It is the responsibility of the tester to define the target analytes, the associated detection limits for those analytes in the particular source effluent, and the required data quality objectives for each specific test program. Provisions are included in this test method that require the tester to determine critical sampling system and instrument operational parameters, and for the conduct of QA/QC procedures. Testers following this test method will generate data that will allow an independent observer to verify the valid collection, identification, and quantification of the subject target analytes.

EPA Method 1A

The purpose of the method is to provide guidance for the selection of sampling ports and traverse points at which sampling for air pollutants will be performed pursuant to regulations set forth in this part.

EPA Method 2

This method is applicable for the determination of the average velocity and the volumetric flow rate of a gas stream.

Method 3A

This is a procedure for measuring oxygen (O2) and carbon dioxide (CO2) in stationary source emissions using a continuous instrumental analyzer. Quality assurance and quality control requirements are included to assure that the tester collects data of known quality. Documentation to these specific requirements for equipment, supplies, sample collection and analysis, calculations, and data analysis will be included.

3.0 EMISSION POINT INFORMATION

Target Analytes

Exhaust emission testing will be conducted for the following compounds: carbon monoxide (CO), oxides of nitrogen (NOx), Volatile organic compounds (VOCs) and Oxygen (O2%).

Test Quality Objectives

Figure 1 summarizes the test quality objectives specific that will be used to evaluate test data to a known degree of accuracy.

Compounds	Infrared Analysis Region (cm^{-1})	Expected Concentration Range	Measurement System Achievable Minimum Detectable Concentrations	Required Measurement System Accuracy and Precision for Test Application
Target Analytes				
CO	200-2200	0-1200 ppm	0.14 ppm	4 ppm
NOx	1875-2138	0-300 ppm	0.20ppm	2 ppm
VOC	2700-2950	0-200 ppm	0.03 ppm	2 ppm
Interfering Compounds				
CO_2	870-1150	0-15%	0%	n/a
Water Vapor	3200-3401	0-25%	0.2%	n/a

Figure 1 Test Specific Target Analytes and Data Quality Objectives

Measured flue gas conditions at the sampling location including temperature, moisture content, and volumetric flow rate will be included in test results.

4.0 QUALITY CONTROL INFORMATION

4.1 Pre-Test Procedures

Pre-test procedures will be conducted prior to FTIR emission testing. Calibration sheets, calibration gases and any other test equipment will be made available prior to the start of testing. Upon completion of the assembled sampling system, a leak check will be conducted under pressure or partial vacuum conditions to ensure the integrity of the sample collection system.

Additional pre-test procedures will include:

- The introduction of nitrogen in order to collect the FTIR background;
- The acquisition of background spectrum;
- A system zero test will be conducted by directing nitrogen through the entire sampling system. The presence of a large amount of CO_2 and H_20 infrared spectral bands is indicative of system leakage;
- Determination of sample cell absorption path length by directing calibration transfer standard (CTS) gas directly through the absorption cell and acquiring its absorbance spectrum;
- A system mechanical response time test will be conducted by directing ethylene (CTS) through the entire system. The time required to reach 95% full scale reading of the CTS will be recorded;
- A system equilibration response time test will be conducted by introducing nitrogen through the entire sampling system;
- A system recovery check will be conducted by introducing a spike (acetaldehyde). The spike gas will be blended with sulfur hexafluoride (SF_6) at
- A known concentration to allow accurate quantification of the exact dilution factor and determination of sample recovery;

- A second system zero test will be conducted by directing nitrogen through the entire sampling system. Data will be recorded continuously until 95% of downscale reading is met. The time for the system to reach zero after exposure to the analyte will be recorded; and
- We will level and zero the incline manometer prior to each set of sample collections.

Data generated during the bench scale pre-test procedures will be presented in Figure 2 (please see section 3.0). Please note that Figure 2 will be presented in the final report with data collected from the actual field-testing source.

Parameter Measured	Gas	Concentration	Path Length	Equilibration Time	Dilution Factor	% Recovery
Path Length	Ethylene	101.2	4.93			
Mechanical Response Time	Ethylene	101.2		42		
System Response Time	Acetaldehyde	101.9		37		
Analyte Spike Recovery	Acetaldehyde	101.9		50	10	92
System Zero	Nitrogen			65		

Figure 2 Measurement System Capabilities

5.0 TEST RUNS AND DURATION

The FTIR integration time is capable of achieving 95% full scale reading (mechanical response time) quicker than most technology used today. Because of this unique feature, along with the pre-test protocols (listed in section 5.0), the unit becomes stabilized in approximately 15-20 minutes. A Great Plains Analytical Services JJJJ technician will collect three separate 1-hour test runs. The final reported analyte concentrations will be the average of each 1-hour test run. Quality control and quality assurance will be conducted prior to, during, and post testing to demonstrate the instrument's integrity and to ensure test result accuracy.

6.0 POST-TEST QUALITY ASSURANCE

Post test quality assurance will verify that the line positions have not shifted by more than 15% of the resolution, and the resolution has not changed by more than 15% of that determined before testing.

7.0 ADDITIONAL INFORMATION AND REPORTING

Additional parameters and atmospheric information will also be provided in the final report and will include:

- Barometric pressure, ambient temperature and volumetric flow;
- The percent moisture.

The final report will contain all field test data including all pre and post calibration information. Final concentrations will be reported in g/hp-hr, lbs/hr and tons/year. The report will also contain a description of the source process and airflow schematic, along with a schematic of the sampling system. Figure 3 represents a typical source and is included for illustrative purposes only.

8.0 HEALTH AND SAFETY CONCERNS

In accordance with 40 CFR Part 60.8, the client must provide safe access to the unit for testing and observance. Due to the nature of the source and the exposure to high temperatures, extreme caution will be observed in order to avoid contact with the unit which may result in burns and or inhalation of exhaust emissions.

Due to the remote location of the source unit, additional health & safety precautions will be observed such as avoidance of slips, trips, falls, and heat exhaustion.

9.0 PROCESS FLOW DIAGRAM

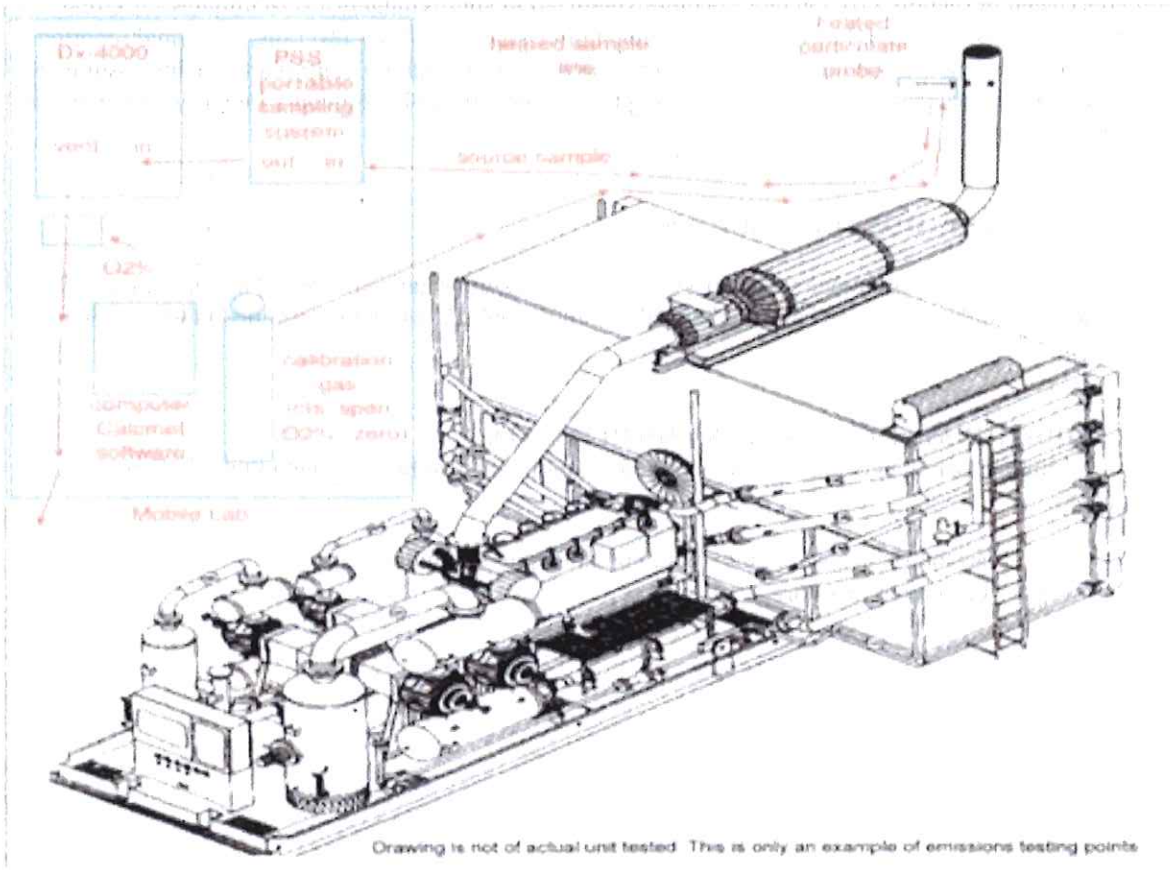

Performance Test Plan
40 CFR Part 60, Subpart JJJJ

Source: Sluice Box 4-2 1H
Make: Caterpillar
Model: 3306 TAB

Location: Reeves County, TX.

Prepared on behalf of:

Cimarex Energy Co.

Prepared by:

Great Plains Analytical Services
303 West 3rd Street
Elk City, OK 73644

Table of Contents

1.0	Introduction	1
2.0	Test Information	1
3.0	Emission Point Information	2
4.0	Quality Control Information	3
	4.1 Pre-Test Procedures	3
5.0	Test Runs and Duration	5
6.0	Post-test Quality Assurance	5
7.0	Additional Information and Reporting	5
8.0	Health and Safety Concerns	6
9.0	Process Flow Diagram	6

Figure(s)

Figure 1: Test Specific Target Analytes and Data Quality Objectives

Figure 2: Measurement System Capabilities

Figure 3: Emission Flow and Sample Schematic

1.0 INTRODUCTION

The purpose of this test plan is to document the test methods and procedures that will be employed to collect and analyze exhaust gas emissions during performance testing of reciprocating internal combustion engines fueled by natural gas. The test will be conducted by:

Great Plains Analytical Services
303 West 3rd Street
Elk City, OK 73644
Contact: Tyson Milner
(580) 225-0403

2.0 TEST INFORMATION

This plan was developed for the following reciprocating internal combustion engine (source) at the following location:

Sluice Box 4-2 1H
Make: Caterpillar
Model: 3306 TAB
SN: R6S01408
HP: 205
Manufacture Date: 9/24/13

Sluice Box 4-2 1H
Make: Caterpillar
Model: 3306 TAB
SN: R6S01851
HP: 205
Manufacture Date: 9/30/13

Location: Reeves County, Texas

The test will be conducted using a multi component gas analyzer that incorporates a Fourier Transform Infrared (FTIR) spectrometer. FTIR is the state of the art technology. It is designed to military specifications and allows simple calibration using only single component calibration gases.

Exhaust emission gas concentrations will be collected and analyzed following the Environmental Protection Agency (EPA) Method 1A, Method 2, Method 2A, Method 3A and ASTM D6348-12.

Information provided in Figures 1 and 2 consists of background data collected from the FTIR during initial bench scale testing from a natural gas fired internal combustion engine. This is provided to demonstrate the FTIR's analytical and quality assurance capabilities.

Method Synopsis

ASTM D6348-12

This extractive FTIR based field test method is used to quantify gas phase concentrations of multiple target analytes from stationary source effluent. Because an FTIR analyzer is potentially capable of analyzing hundreds of compounds, this test method is not analyte or source specific. The analytes, detection levels, and data quality objectives are expected to change for any particular testing situation. It is the responsibility of the tester to define the target analytes, the associated detection limits for those analytes in the particular source effluent, and the required data quality objectives for each specific test program. Provisions are included in this test method that require the tester to determine critical sampling system and instrument operational parameters, and for the conduct of QA/QC procedures. Testers following this test method will generate data that will allow an independent observer to verify the valid collection, identification, and quantification of the subject target analytes.

EPA Method 1A

The purpose of the method is to provide guidance for the selection of sampling ports and traverse points at which sampling for air pollutants will be performed pursuant to regulations set forth in this part.

EPA Method 2

This method is applicable for the determination of the average velocity and the volumetric flow rate of a gas stream.

Method 3A

This is a procedure for measuring oxygen (O2) and carbon dioxide (CO2) in stationary source emissions using a continuous instrumental analyzer. Quality assurance and quality control requirements are included to assure that the tester collects data of known quality. Documentation to these specific requirements for equipment, supplies, sample collection and analysis, calculations, and data analysis will be included.

3.0 EMISSION POINT INFORMATION

Target Analytes

Exhaust emission testing will be conducted for the following compounds: carbon monoxide (CO), oxides of nitrogen (NOx), Volatile organic compounds (VOCs) and Oxygen (O2%).

Test Quality Objectives

Figure 1 summarizes the test quality objectives specific that will be used to evaluate test data to a known degree of accuracy.

Compounds	Infrared Analysis Region (cm^{-1})	Expected Concentration Range	Measurement System Achievable Minimum Detectable Concentrations	Required Measurement System Accuracy and Precision for Test Application
Target Analytes				
CO	200-2200	0-1200 ppm	0.14 ppm	4 ppm
NOx	1875-2138	0-300 ppm	0.20ppm	2 ppm
VOC	2700-2950	0-200 ppm	0.03 ppm	2 ppm
Interfering Compounds				
CO_2	870-1150	0-15%	0%	n/a
Water Vapor	3200-3401	0-25%	0.2%	n/a

Figure 1 Test Specific Target Analytes and Data Quality Objectives

Measured flue gas conditions at the sampling location including temperature, moisture content, and volumetric flow rate will be included in test results.

4.0 QUALITY CONTROL INFORMATION

4.1 Pre-Test Procedures

Pre-test procedures will be conducted prior to FTIR emission testing. Calibration sheets, calibration gases and any other test equipment will be made available prior to the start of testing. Upon completion of the assembled sampling system, a leak check will be conducted under pressure or partial vacuum conditions to ensure the integrity of the sample collection system.

Additional pre-test procedures will include:

- The introduction of nitrogen in order to collect the FTIR background;
- The acquisition of background spectrum;
- A system zero test will be conducted by directing nitrogen through the entire sampling system. The presence of a large amount of CO_2 and H_20 infrared spectral bands is indicative of system leakage;
- Determination of sample cell absorption path length by directing calibration transfer standard (CTS) gas directly through the absorption cell and acquiring its absorbance spectrum;
- A system mechanical response time test will be conducted by directing ethylene (CTS) through the entire system. The time required to reach 95% full scale reading of the CTS will be recorded;
- A system equilibration response time test will be conducted by introducing nitrogen through the entire sampling system;
- A system recovery check will be conducted by introducing a spike (acetaldehyde). The spike gas will be blended with sulfur hexafluoride (SF_6) at
- A known concentration to allow accurate quantification of the exact dilution factor and determination of sample recovery;

- A second system zero test will be conducted by directing nitrogen through the entire sampling system. Data will be recorded continuously until 95% of downscale reading is met. The time for the system to reach zero after exposure to the analyte will be recorded; and
- We will level and zero the incline manometer prior to each set of sample collections.

Data generated during the bench scale pre-test procedures will be presented in Figure 2 (please see section 3.0). Please note that Figure 2 will be presented in the final report with data collected from the actual field-testing source.

Parameter Measured	Gas	Concentration	Path Length	Equilibration Time	Dilution Factor	% Recovery
Path Length	Ethylene	101.2	4.93			
Mechanical Response Time	Ethylene	101.2		42		
System Response Time	Acetaldehyde	101.9		37		
Analyte Spike Recovery	Acetaldehyde	101.9		50	10	92
System Zero	Nitrogen			65		

Figure 2 Measurement System Capabilities

5.0 TEST RUNS AND DURATION

The FTIR integration time is capable of achieving 95% full scale reading (mechanical response time) quicker than most technology used today. Because of this unique feature, along with the pre-test protocols (listed in section 5.0), the unit becomes stabilized in approximately 15-20 minutes. A Great Plains Analytical Services JJJJ technician will collect three separate 1-hour test runs. The final reported analyte concentrations will be the average of each 1-hour test run. Quality control and quality assurance will be conducted prior to, during, and post testing to demonstrate the instrument's integrity and to ensure test result accuracy.

6.0 POST-TEST QUALITY ASSURANCE

Post test quality assurance will verify that the line positions have not shifted by more than 15% of the resolution, and the resolution has not changed by more than 15% of that determined before testing.

7.0 ADDITIONAL INFORMATION AND REPORTING

Additional parameters and atmospheric information will also be provided in the final report and will include:

- Barometric pressure, ambient temperature and volumetric flow;
- The percent moisture.

The final report will contain all field test data including all pre and post calibration information. Final concentrations will be reported in g/hp-hr, lbs/hr and tons/year. The report will also contain a description of the source process and airflow schematic, along with a schematic of the sampling system. Figure 3 represents a typical source and is included for illustrative purposes only.

8.0 HEALTH AND SAFETY CONCERNS

In accordance with 40 CFR Part 60.8, the client must provide safe access to the unit for testing and observance. Due to the nature of the source and the exposure to high temperatures, extreme caution will be observed in order to avoid contact with the unit which may result in burns and or inhalation of exhaust emissions.

Due to the remote location of the source unit, additional health & safety precautions will be observed such as avoidance of slips, trips, falls, and heat exhaustion.

9.0 PROCESS FLOW DIAGRAM

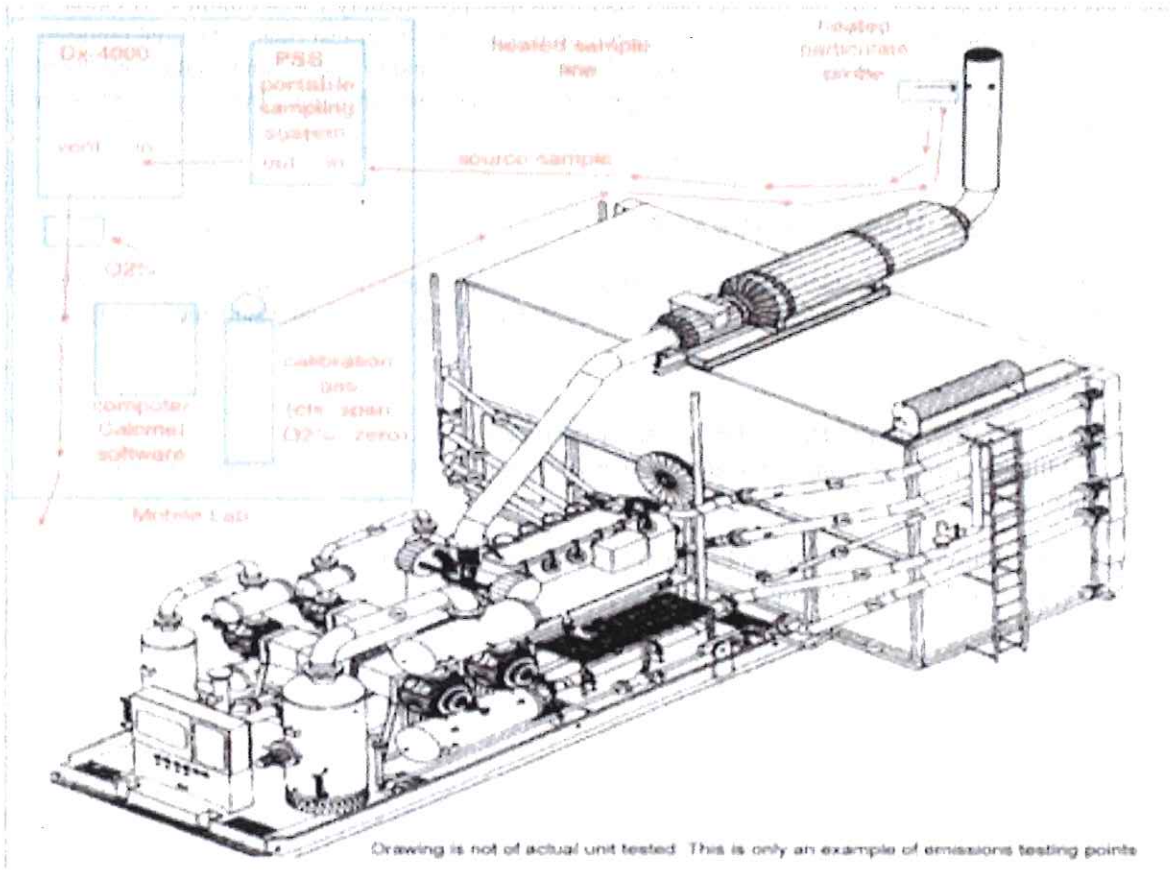

Performance Test Plan
40 CFR Part 60, Subpart JJJJ

Source: Big Sky 55-16H
(Wolfcamp B, C & D)

Make: Caterpillar
Model: 3306 NA

Location: Reeves County, TX.

Prepared on behalf of:

Cimarex Energy Co.

Prepared by:

Great Plains Analytical Services
303 West 3rd Street
Elk City, OK 73644

Table of Contents

1.0	Introduction	1
2.0	Test Information	1
3.0	Emission Point Information	2
4.0	Quality Control Information	3
	4.1 Pre-Test Procedures	3
5.0	Test Runs and Duration	5
6.0	Post-test Quality Assurance	5
7.0	Additional Information and Reporting	5
8.0	Health and Safety Concerns	6
9.0	Process Flow Diagram	6

Figure(s)

Figure 1: Test Specific Target Analytes and Data Quality Objectives

Figure 2: Measurement System Capabilities

Figure 3: Emission Flow and Sample Schematic

1.0 INTRODUCTION

The purpose of this test plan is to document the test methods and procedures that will be employed to collect and analyze exhaust gas emissions during performance testing of reciprocating internal combustion engines fueled by natural gas. The test will be conducted by:

Great Plains Analytical Services
303 West 3rd Street
Elk City, OK 73644
Contact: Tyson Milner
(580) 225-0403

2.0 TEST INFORMATION

This plan was developed for the following reciprocating internal combustion engine (source) at the following location:

Big Sky 55-16 1H (Wolfcamp B,C & D)
Make: Caterpillar
Model: 3306 NA
SN: G6X06997
HP: 145
Manufacture Date: 12/21/10

Location: Reeves County, Texas

The test will be conducted using a multi component gas analyzer that incorporates a Fourier Transform Infrared (FTIR) spectrometer. FTIR is the state of the art technology. It is designed to military specifications and allows simple calibration using only single component calibration gases.

Exhaust emission gas concentrations will be collected and analyzed following the Environmental Protection Agency (EPA) Method 1A, Method 2, Method 2A, Method 3A and ASTM D6348-12.

Information provided in Figures 1 and 2 consists of background data collected from the FTIR during initial bench scale testing from a natural gas fired internal combustion engine. This is provided to demonstrate the FTIR's analytical and quality assurance capabilities.

Method Synopsis

ASTM D6348-12

This extractive FTIR based field test method is used to quantify gas phase concentrations of multiple target analytes from stationary source effluent. Because an FTIR analyzer is potentially capable of analyzing hundreds of compounds, this test method is not analyte or source specific. The analytes, detection levels, and data quality objectives are expected to change for any particular testing situation. It is the responsibility of the tester to define the target analytes, the associated detection limits for those analytes in the particular source effluent, and the required data quality objectives for each specific test program. Provisions are included in this test method that require the tester to determine critical sampling system and instrument operational parameters, and for the conduct of QA/QC procedures. Testers following this test method will generate data that will allow an independent observer to verify the valid collection, identification, and quantification of the subject target analytes.

EPA Method 1A

The purpose of the method is to provide guidance for the selection of sampling ports and traverse points at which sampling for air pollutants will be performed pursuant to regulations set forth in this part.

EPA Method 2

This method is applicable for the determination of the average velocity and the volumetric flow rate of a gas stream.

Method 3A

This is a procedure for measuring oxygen (O2) and carbon dioxide (CO2) in stationary source emissions using a continuous instrumental analyzer. Quality assurance and quality control requirements are included to assure that the tester collects data of known quality. Documentation to these specific requirements for equipment, supplies, sample collection and analysis, calculations, and data analysis will be included.

3.0 EMISSION POINT INFORMATION

Target Analytes

Exhaust emission testing will be conducted for the following compounds: carbon monoxide (CO), oxides of nitrogen (NOx), Volatile organic compounds (VOCs) and Oxygen (O2%).

Test Quality Objectives

Figure 1 summarizes the test quality objectives specific that will be used to evaluate test data to a known degree of accuracy.

Compounds	Infrared Analysis Region (cm^{-1})	Expected Concentration Range	Measurement System Achievable Minimum Detectable Concentrations	Required Measurement System Accuracy and Precision for Test Application
Target Analytes				
CO	200-2200	0-1200 ppm	0.14 ppm	4 ppm
NOx	1875-2138	0-300 ppm	0.20ppm	2 ppm
VOC	2700-2950	0-200 ppm	0.03 ppm	2 ppm
Interfering Compounds				
CO_2	870-1150	0-15%	0%	n/a
Water Vapor	3200-3401	0-25%	0.2%	n/a

Figure 1 Test Specific Target Analytes and Data Quality Objectives

Measured flue gas conditions at the sampling location including temperature, moisture content, and volumetric flow rate will be included in test results.

4.0 QUALITY CONTROL INFORMATION

4.1 Pre-Test Procedures

Pre-test procedures will be conducted prior to FTIR emission testing. Calibration sheets, calibration gases and any other test equipment will be made available prior to the start of testing. Upon completion of the assembled sampling system, a leak check will be conducted under pressure or partial vacuum conditions to ensure the integrity of the sample collection system.

Additional pre-test procedures will include:

- The introduction of nitrogen in order to collect the FTIR background;
- The acquisition of background spectrum;
- A system zero test will be conducted by directing nitrogen through the entire sampling system. The presence of a large amount of CO_2 and H_20 infrared spectral bands is indicative of system leakage;
- Determination of sample cell absorption path length by directing calibration transfer standard (CTS) gas directly through the absorption cell and acquiring its absorbance spectrum;
- A system mechanical response time test will be conducted by directing ethylene (CTS) through the entire system. The time required to reach 95% full scale reading of the CTS will be recorded;
- A system equilibration response time test will be conducted by introducing nitrogen through the entire sampling system;
- A system recovery check will be conducted by introducing a spike (acetaldehyde). The spike gas will be blended with sulfur hexafluoride (SF_6) at
- A known concentration to allow accurate quantification of the exact dilution factor and determination of sample recovery;

- A second system zero test will be conducted by directing nitrogen through the entire sampling system. Data will be recorded continuously until 95% of downscale reading is met. The time for the system to reach zero after exposure to the analyte will be recorded; and
- We will level and zero the incline manometer prior to each set of sample collections.

Data generated during the bench scale pre-test procedures will be presented in Figure 2 (please see section 3.0). Please note that Figure 2 will be presented in the final report with data collected from the actual field-testing source.

Parameter Measured	Gas	Concentration	Path Length	Equilibration Time	Dilution Factor	% Recovery
Path Length	Ethylene	101.2	4.93			
Mechanical Response Time	Ethylene	101.2		42		
System Response Time	Acetaldehyde	101.9		37		
Analyte Spike Recovery	Acetaldehyde	101.9		50	10	92
System Zero	Nitrogen			65		

Figure 2 Measurement System Capabilities

5.0 TEST RUNS AND DURATION

The FTIR integration time is capable of achieving 95% full scale reading (mechanical response time) quicker than most technology used today. Because of this unique feature, along with the pre-test protocols (listed in section 5.0), the unit becomes stabilized in approximately 15-20 minutes. A Great Plains Analytical Services JJJJ technician will collect three separate 1-hour test runs. The final reported analyte concentrations will be the average of each 1-hour test run. Quality control and quality assurance will be conducted prior to, during, and post testing to demonstrate the instrument's integrity and to ensure test result accuracy.

6.0 POST-TEST QUALITY ASSURANCE

Post test quality assurance will verify that the line positions have not shifted by more than 15% of the resolution, and the resolution has not changed by more than 15% of that determined before testing.

7.0 ADDITIONAL INFORMATION AND REPORTING

Additional parameters and atmospheric information will also be provided in the final report and will include:

- Barometric pressure, ambient temperature and volumetric flow;
- The percent moisture.

The final report will contain all field test data including all pre and post calibration information. Final concentrations will be reported in g/hp-hr, lbs/hr and tons/year. The report will also contain a description of the source process and airflow schematic, along with a schematic of the sampling system. Figure 3 represents a typical source and is included for illustrative purposes only.

8.0 HEALTH AND SAFETY CONCERNS

In accordance with 40 CFR Part 60.8, the client must provide safe access to the unit for testing and observance. Due to the nature of the source and the exposure to high temperatures, extreme caution will be observed in order to avoid contact with the unit which may result in burns and or inhalation of exhaust emissions.

Due to the remote location of the source unit, additional health & safety precautions will be observed such as avoidance of slips, trips, falls, and heat exhaustion.

9.0 PROCESS FLOW DIAGRAM

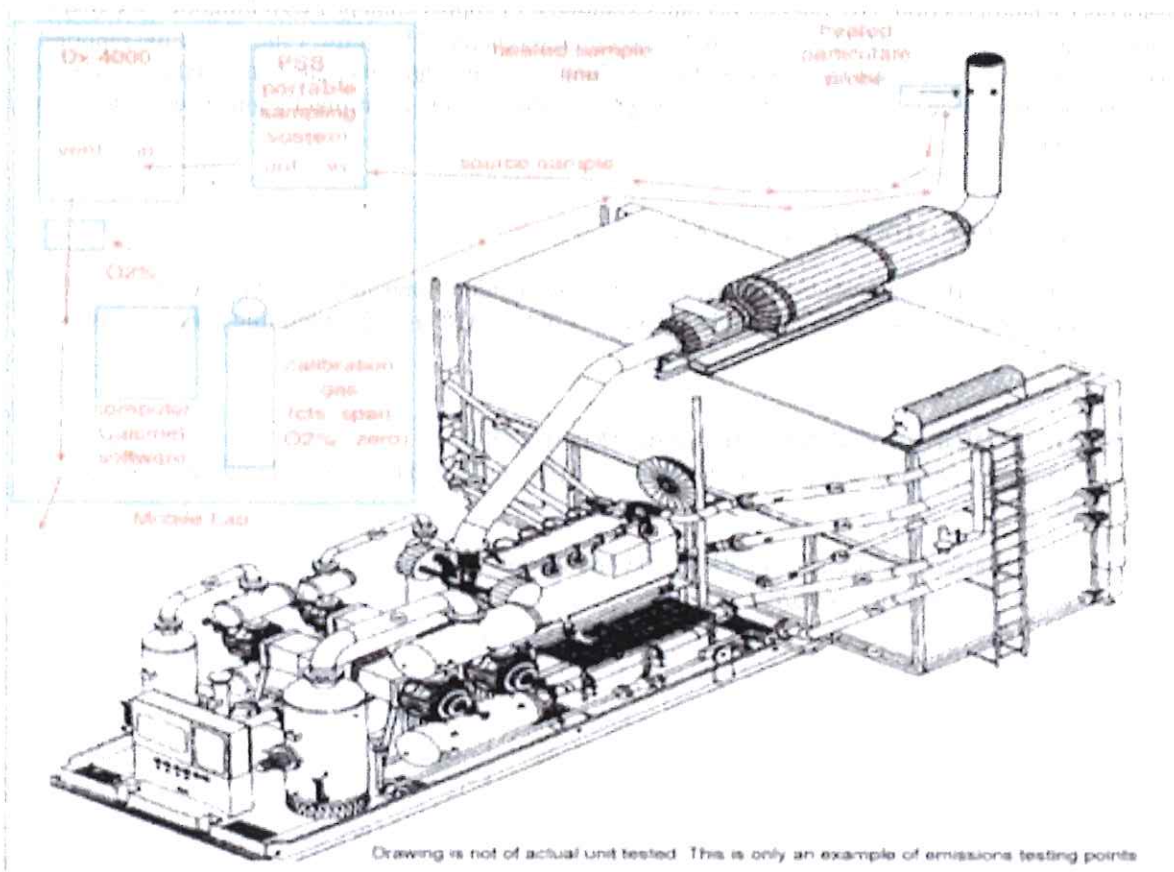

Performance Test Plan
40 CFR Part 60, Subpart JJJJ

Source: Pitzer Johnson State Unit 1H
Make: Caterpillar
Model: 3306 TA

Location: Ward County, TX.

Prepared on behalf of:

Cimarex Energy Co.

Prepared by:

Great Plains Analytical Services
303 West 3rd Street
Elk City, OK 73644

Table of Contents

1.0	Introduction	1
2.0	Test Information	1
3.0	Emission Point Information	2
4.0	Quality Control Information	3
	4.1 Pre-Test Procedures	3
5.0	Test Runs and Duration	5
6.0	Post-test Quality Assurance	5
7.0	Additional Information and Reporting	5
8.0	Health and Safety Concerns	6
9.0	Process Flow Diagram	6

Figure(s)

Figure 1: Test Specific Target Analytes and Data Quality Objectives

Figure 2: Measurement System Capabilities

Figure 3: Emission Flow and Sample Schematic

1.0 INTRODUCTION

The purpose of this test plan is to document the test methods and procedures that will be employed to collect and analyze exhaust gas emissions during performance testing of reciprocating internal combustion engines fueled by natural gas. The test will be conducted by:

Great Plains Analytical Services
303 West 3rd Street
Elk City, OK 73644
Contact: Tyson Milner
(580) 225-0403

2.0 TEST INFORMATION

This plan was developed for the following reciprocating internal combustion engine (source) at the following location:

Pitzer Johson State Unit 1H
Make: Caterpillar
Model: 3306 TA
SN: G6X07456
HP: 203
Manufacture Date: 7/15/2011

Location: Ward County, Texas

The test will be conducted using a multi component gas analyzer that incorporates a Fourier Transform Infrared (FTIR) spectrometer. FTIR is the state of the art technology. It is designed to military specifications and allows simple calibration using only single component calibration gases.

Exhaust emission gas concentrations will be collected and analyzed following the Environmental Protection Agency (EPA) Method 1A, Method 2, Method 2A, Method 3A and ASTM D6348-12.

Information provided in Figures 1 and 2 consists of background data collected from the FTIR during initial bench scale testing from a natural gas fired internal combustion engine. This is provided to demonstrate the FTIR's analytical and quality assurance capabilities.

Method Synopsis

ASTM D6348-12

This extractive FTIR based field test method is used to quantify gas phase concentrations of multiple target analytes from stationary source effluent. Because an FTIR analyzer is potentially capable of analyzing hundreds of compounds, this test method is not analyte or source specific. The analytes, detection levels, and data quality objectives are expected to change for any particular testing situation. It is the responsibility of the tester to define the target analytes, the associated detection limits for those analytes in the particular source effluent, and the required data quality objectives for each specific test program. Provisions are included in this test method that require the tester to determine critical sampling system and instrument operational parameters, and for the conduct of QA/QC procedures. Testers following this test method will generate data that will allow an independent observer to verify the valid collection, identification, and quantification of the subject target analytes.

EPA Method 1A

The purpose of the method is to provide guidance for the selection of sampling ports and traverse points at which sampling for air pollutants will be performed pursuant to regulations set forth in this part.

EPA Method 2

This method is applicable for the determination of the average velocity and the volumetric flow rate of a gas stream.

Method 3A

This is a procedure for measuring oxygen (O2) and carbon dioxide (CO2) in stationary source emissions using a continuous instrumental analyzer. Quality assurance and quality control requirements are included to assure that the tester collects data of known quality. Documentation to these specific requirements for equipment, supplies, sample collection and analysis, calculations, and data analysis will be included.

3.0 EMISSION POINT INFORMATION

Target Analytes

Exhaust emission testing will be conducted for the following compounds: carbon monoxide (CO), oxides of nitrogen (NOx), Volatile organic compounds (VOCs) and Oxygen (O2%).

Test Quality Objectives

Figure 1 summarizes the test quality objectives specific that will be used to evaluate test data to a known degree of accuracy.

Compounds	Infrared Analysis Region (cm^{-1})	Expected Concentration Range	Measurement System Achievable Minimum Detectable Concentrations	Required Measurement System Accuracy and Precision for Test Application
Target Analytes				
CO	200-2200	0-1200 ppm	0.14 ppm	4 ppm
NOx	1875-2138	0-300 ppm	0.20ppm	2 ppm
VOC	2700-2950	0-200 ppm	0.03 ppm	2 ppm
Interfering Compounds				
CO_2	870-1150	0-15%	0%	n/a
Water Vapor	3200-3401	0-25%	0.2%	n/a

Figure 1 Test Specific Target Analytes and Data Quality Objectives

Measured flue gas conditions at the sampling location including temperature, moisture content, and volumetric flow rate will be included in test results.

4.0 QUALITY CONTROL INFORMATION

4.1 Pre-Test Procedures

Pre-test procedures will be conducted prior to FTIR emission testing. Calibration sheets, calibration gases and any other test equipment will be made available prior to the start of testing. Upon completion of the assembled sampling system, a leak check will be conducted under pressure or partial vacuum conditions to ensure the integrity of the sample collection system.

Additional pre-test procedures will include:

- The introduction of nitrogen in order to collect the FTIR background;
- The acquisition of background spectrum;
- A system zero test will be conducted by directing nitrogen through the entire sampling system. The presence of a large amount of CO_2 and H_20 infrared spectral bands is indicative of system leakage;
- Determination of sample cell absorption path length by directing calibration transfer standard (CTS) gas directly through the absorption cell and acquiring its absorbance spectrum;
- A system mechanical response time test will be conducted by directing ethylene (CTS) through the entire system. The time required to reach 95% full scale reading of the CTS will be recorded;
- A system equilibration response time test will be conducted by introducing nitrogen through the entire sampling system;
- A system recovery check will be conducted by introducing a spike (acetaldehyde). The spike gas will be blended with sulfur hexafluoride (SF_6) at
- A known concentration to allow accurate quantification of the exact dilution factor and determination of sample recovery;

- A second system zero test will be conducted by directing nitrogen through the entire sampling system. Data will be recorded continuously until 95% of downscale reading is met. The time for the system to reach zero after exposure to the analyte will be recorded; and
- We will level and zero the incline manometer prior to each set of sample collections.

Data generated during the bench scale pre-test procedures will be presented in Figure 2 (please see section 3.0). Please note that Figure 2 will be presented in the final report with data collected from the actual field-testing source.

Parameter Measured	Gas	Concentration	Path Length	Equilibration Time	Dilution Factor	% Recovery
Path Length	Ethylene	101.2	4.93			
Mechanical Response Time	Ethylene	101.2		42		
System Response Time	Acetaldehyde	101.9		37		
Analyte Spike Recovery	Acetaldehyde	101.9		50	10	92
System Zero	Nitrogen			65		

Figure 2 Measurement System Capabilities

5.0 TEST RUNS AND DURATION

The FTIR integration time is capable of achieving 95% full scale reading (mechanical response time) quicker than most technology used today. Because of this unique feature, along with the pre-test protocols (listed in section 5.0), the unit becomes stabilized in approximately 15-20 minutes. A Great Plains Analytical Services JJJJ technician will collect three separate 1-hour test runs. The final reported analyte concentrations will be the average of each 1-hour test run. Quality control and quality assurance will be conducted prior to, during, and post testing to demonstrate the instrument's integrity and to ensure test result accuracy.

6.0 POST-TEST QUALITY ASSURANCE

Post test quality assurance will verify that the line positions have not shifted by more than 15% of the resolution, and the resolution has not changed by more than 15% of that determined before testing.

7.0 ADDITIONAL INFORMATION AND REPORTING

Additional parameters and atmospheric information will also be provided in the final report and will include:

- Barometric pressure, ambient temperature and volumetric flow;
- The percent moisture.

The final report will contain all field test data including all pre and post calibration information. Final concentrations will be reported in g/hp-hr, lbs/hr and tons/year. The report will also contain a description of the source process and airflow schematic, along with a schematic of the sampling system. Figure 3 represents a typical source and is included for illustrative purposes only.

8.0 HEALTH AND SAFETY CONCERNS

In accordance with 40 CFR Part 60.8, the client must provide safe access to the unit for testing and observance. Due to the nature of the source and the exposure to high temperatures, extreme caution will be observed in order to avoid contact with the unit which may result in burns and or inhalation of exhaust emissions.

Due to the remote location of the source unit, additional health & safety precautions will be observed such as avoidance of slips, trips, falls, and heat exhaustion.

9.0 PROCESS FLOW DIAGRAM

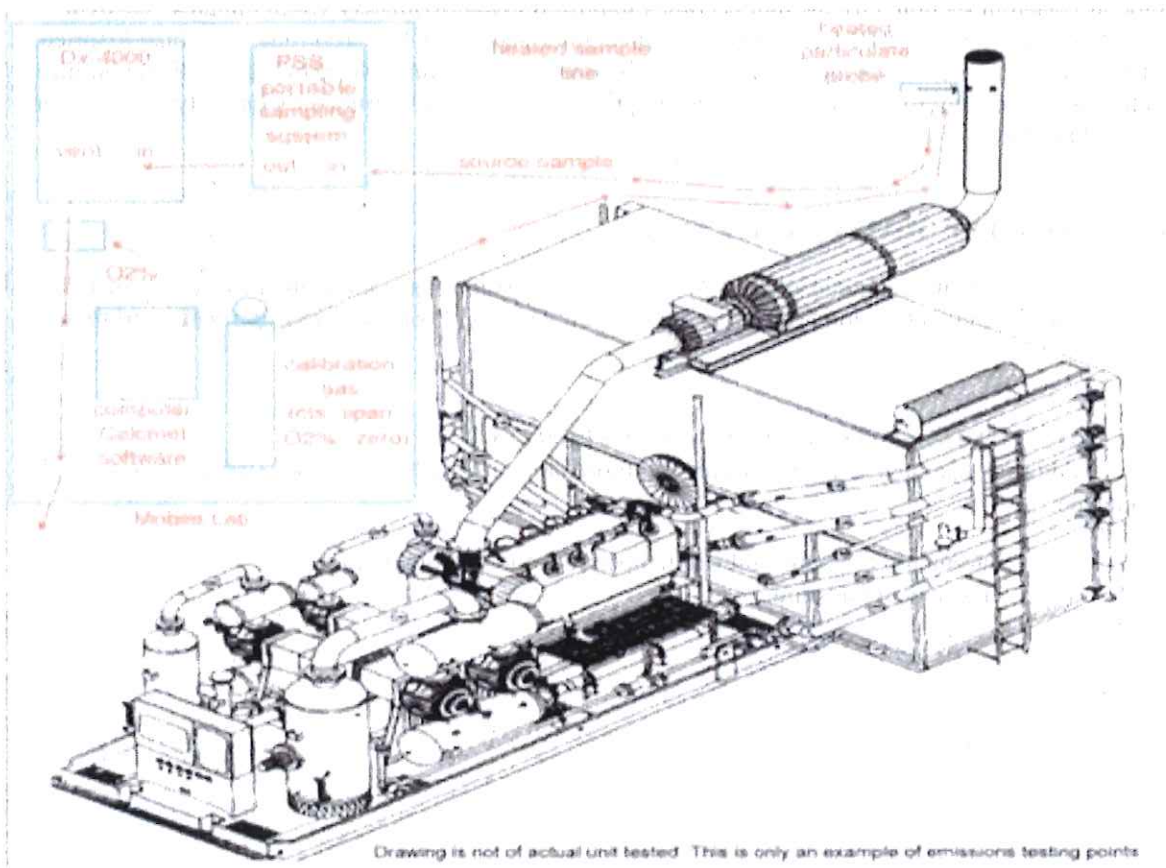

A1/A1/CO 1100548814 64

AIR HYGIENE, INC.

Testing Solutions for a Better World

RECEIVE

JUL 23 2015

AirToxics & Inspection
Coordination Branch
6EN-A

July 10, 2015

Regional Administrator
U.S. EPA - Region 6
Fountain Place 12th Floor, Suite 1200
1445 Ross Avenue
Dallas, TX 75202-2733

Dear Administrator:

Enclosed please find one copy each of the following 40 CFR 60, Subpart JJJJ emission compliance test reports, submitted by Air Hygiene International, Inc., on behalf of XTO Energy, Inc. for the following engines.

- McCarty 1-36H, Carter County, OK
- Miller 1-35H, Carter County, OK

If you have any questions, comments, or concerns please feel free to contact me at (918) 810-5638 or mplummer@airhygiene.com.

Sincerely,

Mike Plummer, QSTI
Regional Manager – Fort Worth, TX

Encl. (2)

cc:
xto-15-multi.ok-eng#8

AIR HYGIENE, INC.

Testing Solutions for a Better World

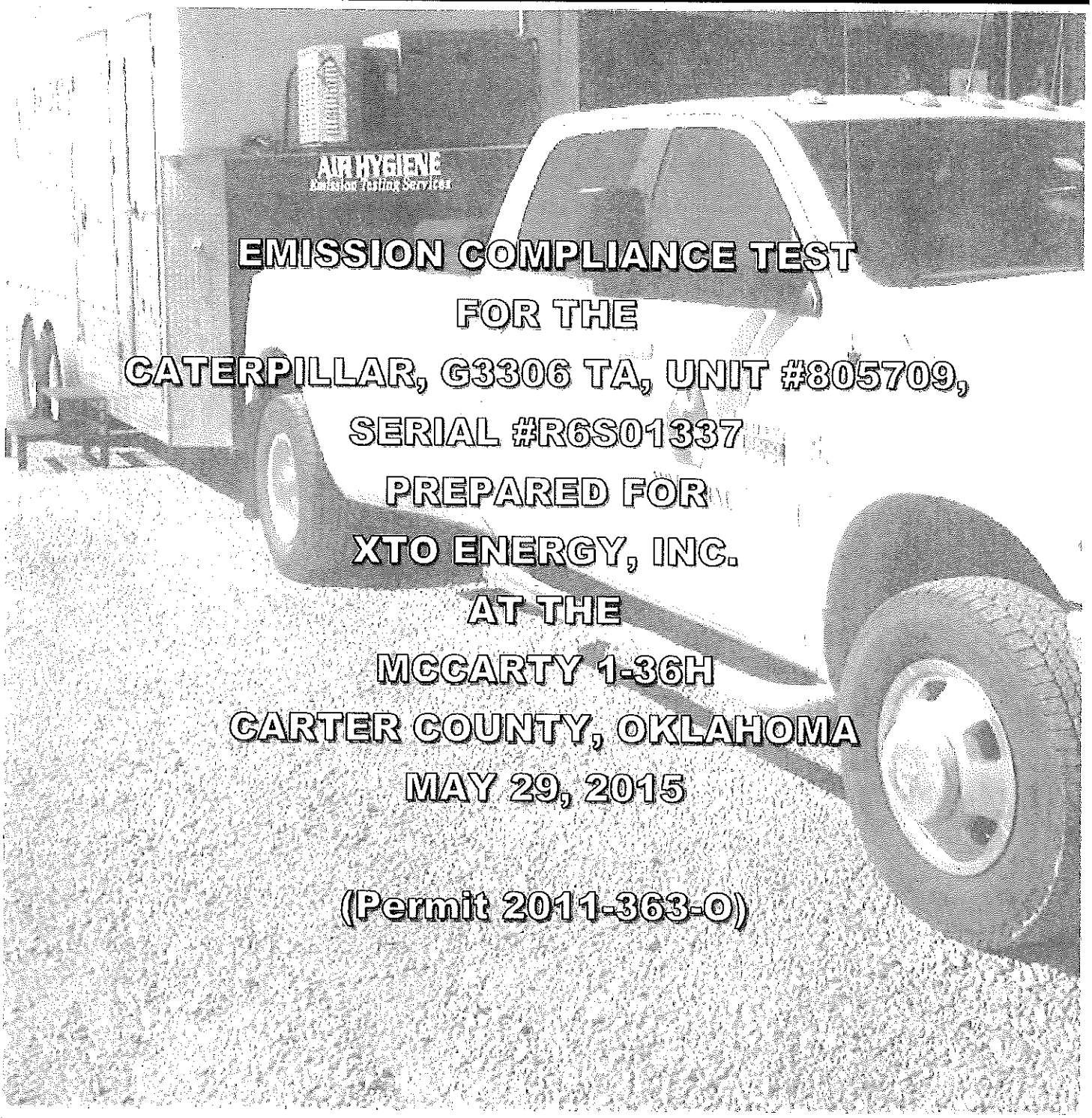

EMISSION COMPLIANCE TEST FOR THE CATERPILLAR, G3306 TA, UNIT #805709, SERIAL #R6S01337 PREPARED FOR XTO ENERGY, INC. AT THE MCCARTY 1-36H CARTER COUNTY, OKLAHOMA MAY 29, 2015

(Permit 2011-363-O)

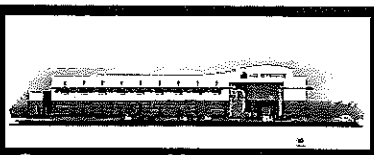

Corporate Headquarters
1600 W Tacoma Street
Broken Arrow, OK 74012

AIR HYGIENE, INC.

(918) 307-8865 or (888) 461-8778
www.airhygiene.com

Remote Testing Offices
Las Vegas, NV 89156
Ft. Worth, TX 76028
Humble, TX 77338
Shreveport, LA 71115
Miami, FL 33101
Philadelphia, PA 19136

EMISSION COMPLIANCE TEST
FOR THE
CATERPILLAR, G3306 TA, UNIT #805709,
SERIAL #R6S01337
PREPARED FOR
XTO ENERGY, INC.
AT THE
MCCARTY 1-36H
CARTER COUNTY, OKLAHOMA
MAY 29, 2015

Prepared and Reviewed by:

Cole McBride, QSTI
Project Manager

John M. Plummer, QSTI
Regional Manager, Fort Worth, Texas

Pandu Sattvika, P.E., QSTI,
Regional Manager, Austin, Texas

Table of Contents

1.0 INTRODUCTION ____ *1*

1.1 TEST PURPOSE AND OBJECTIVES ____ 1

1.2 SUMMARY OF TEST PROGRAM ____ 1

1.2.1 Participating Organizations ____ 1
1.2.2 Industry ____ 1
1.2.3 State and Federal Requirements ____ 1
1.2.4 Plant Location ____ 1
1.2.5 Equipment Tested ____ 1
1.2.6 Emission Points ____ 1
1.2.7 Emission Parameters Measured ____ 1
1.2.8 Date of Emission Test ____ 1
1.2.9 State Certification ____ 1

1.3 KEY PERSONNEL ____ 1

2.0 SUMMARY OF TEST RESULTS ____ *1*

3.0 SOURCE OPERATION ____ *3*

3.1 PROCESS DESCRIPTION ____ 3

3.2 SAMPLING LOCATION ____ 3

4.0 SAMPLING AND ANALYTICAL PROCEDURES ____ *3*

4.1 TEST METHODS ____ 3

4.2 INSTRUMENT CONFIGURATION AND OPERATIONS FOR GAS ANALYSIS ____ 4

APPENDICES

Appendix A Test Results and Calculations

Appendix B Emission Data Records

Appendix C Calibration Gas Certifications

Appendix D Quality Assurance and Quality Control Data

Appendix E Fuel Analysis Records

Appendix F Field Data Sheets

Emissions Compliance Test
Caterpillar, G3306 TA, Unit #805709, Serial #R6S01337
XTO Energy, Inc.
McCarty 1-36H
Carter County, Oklahoma
May 29, 2015

1.0 INTRODUCTION

Air Hygiene International, Inc. (Air Hygiene) has completed the emissions testing study for nitrogen oxides (NOx), carbon monoxide (CO), volatile organic compound (VOC) and oxygen (O_2) from the exhaust of the Caterpillar, G3306 TA, Unit #805709, Serial #R6S01337 for XTO Energy, Inc. at the McCarty 1-36H in Carter County, Oklahoma. This report details the background, results, process description, and the sampling/analysis methodology of the stack sampling survey conducted on May 29, 2015.

1.1 TEST PURPOSE AND OBJECTIVES

The purpose of the test was to conduct the periodic emission test to document levels of selected pollutants with the unit operating within 10% of peak or highest achievable load. The engine is subject to emission testing requirements set forth in the standards designated by the United States Environmental Protection Agency (EPA) Title 40, Code of Federal Regulations 40 CFR 60, Subpart JJJJ and the Oklahoma Department of Environmental Quality (ODEQ) permits. The specific objective was to determine the emission concentration of NOx, CO, VOC and O_2 from the exhaust of XTO Energy, Inc.' Caterpillar, G3306 TA, Unit #805709, Serial #R6S01337.

1.2 SUMMARY OF TEST PROGRAM

The following list details pertinent information related to this specific project:

1.2.1 Participating Organizations
- Oklahoma Department of Environmental Quality (ODEQ)
- XTO Energy, Inc.
- Air Hygiene

1.2.2 Industry
- Natural Gas Transport and Processing

1.2.3 State and Federal Requirements
- State Permit 2011-363-O
- 40 CFR 60, Subpart JJJJ

1.2.4 Plant Location
- McCarty 1-36H in Carter County, Oklahoma
- GPS Coordinates [Latitude 34.246010, Longitude -97.053990]

1.2.5 Equipment Tested
- Caterpillar, G3306 TA, Unit #805709, Serial #R6S01337

1.2.6 Emission Points
- Exhaust from the Caterpillar, G3306 TA, Unit #805709, Serial #R6S01337

1.2.7 Emission Parameters Measured
- NOx
- CO
- VOC
- O_2

xto-15-multi.ok-eng#8-McCarty 1-36H_805709

1.2.8 Date of Emission Test

- May 29, 2015

1.2.9 State Certification

- Texas NELAP Accreditation No. T104704523-14-1

1.3 KEY PERSONNEL

XTO Energy, Inc.:	William Payne	817-885-3165
Air Hygiene:	Rob White	918-307-8865

2.0 SUMMARY OF TEST RESULTS

Results from the sampling conducted on XTO Energy, Inc.'s Caterpillar, G3306 TA, Unit #805709, Serial #R6S01337 located at the McCarty 1-36H on May 29, 2015 are summarized in the following table and relate only to the items tested.

The results of all measured pollutant emissions were below the required limits. All testing was performed without any real or apparent errors.

TABLE 2.1: ENGINE EMISSIONS REPORT
XTO ENERGY, INC.
CATERPILLAR, G3306 TA, UNIT #805709, SERIAL #R6S01337

Test Period:	Qtr 2 - 2015	**Manufacturing or Rebuild Date**		**Federal Requirements :**	40 CFR 60, JJJJ
Location:	McCarty 1-36H			**Unit Number:**	805709
Date:	May 29, 2015	09/12/13		**Suction Pressure (psi):**	58
Project Number:	xto-15-multi.ok-eng#8			**Discharge Pressure (psi):**	930
Engine Manufacturer:	Caterpillar	**Federal Regulatory Citation**		**Stack Exhaust Temperature (°F):**	–
Engine Model:	G3306 TA			**Rated Horsepower (hp_r):**	203
Engine Serial Number:	R6S01337			**Brake Horsepower (bhp):**	118
Analyzer Manufacturers:	TECO(NOx), TECO(CO), SERV(O2), VIG(VOC)	Subpart JJJJ		**Engine Fuel Flow (SCFH):**	968
Analyzer Model Numbers:	42c, 48i, 1440, 210			**Specific Gravity:**	0.7253
Date Analyzers Calibrated:	May 29, 2015	§60.4233 and/or §60.4243		**Fuel Heating Value [LHV] (Btu/SCF):**	1,107
Test Results and Calculations:	Appendix A			**BSFC (Btu/hp*hr):**	9,053
Emission Data Records:	Appendix B			**Annual Hours Allowed to Operate:**	8,760
Calibration Gas Certifications:	Appendix C			**Engine Speed (rpm):**	1,518
Quality Assurance and QC Data:	Appendix D			**Air Manifold Temp (°F):**	113
Fuel Analysis Records:	Appendix E			**Air Manifold Pressure (psia):**	13
Ambient Temperature (°F):	77.3			**Operating Hours (hours):**	4,200
Barometric Pressure (in. Hg):	30.52			**Available Horsepower (hp_a):**	171
Relative Humidity (%):	69			**Rated Engine Speed (rpm):**	1,800
				Rated Manifold Pressure (in. Hg (abs)):	39
				Engine Load (%):	69
				Differential Pressure (in H_2O):	–

Emission Test Results

Pollutant (units)		Stack Test Results	Federal Limits	Passing
O_2	(%)	0.00	--	--
NOx	(ppmvd)	37.49	--	--
CO	(ppmvd)	338.88	--	--
VOC	(ppmvd)	12.13	--	--
NOx	(ppmvd@15%O_2)	10.58	82.00	YES
CO	(ppmvd@15%O_2)	95.66	270.00	YES
VOC	(ppmvd@15%O_2)	3.42	60.00	YES
NOx	(lb/hr)	0.05	--	--
CO	(lb/hr)	0.25	--	--
VOC	(lb/hr)	0.01	--	--
NOx	(g/hp*hr)	0.18	1.00	YES
CO	(g/hp*hr)	0.97	2.00	YES
VOC	(g/hp*hr)	0.05	0.70	YES

All testing conducted according to United States Environmental Protection Agency (EPA), Methods: 3a, 4, 7e, 10, 19 and 18/25a.

-Brake horsepower based on available horsepower multiplied by load.
-Available horsepower based on the engine speed ratio (actual vs rated), see Engine Spec Sheet, Appendix B.
-Load based on the air manifold ratio (actual vs rated), see Engine Spec Sheet, Appendix B.

Tested By: Air Hygiene International, Inc.
Tester(s) / Test Unit(s): RW/162/208

3.0 SOURCE OPERATION

3.1 PROCESS DESCRIPTION

The unit tested was a Caterpillar, G3306 TA, Unit #805709, Serial #R6S01337. The engine is rated at 203 horsepower. The engine emissions are vented to the atmosphere through an exhaust system extending from the engine.

3.2 SAMPLING LOCATION

The stack measures 6 inches in diameter with an elevation at the top of 7 feet above grade. The stack lacked exhaust ports and testing was conducted using a stainless steel hook over the top of the stack and down into the exhaust. The hook extended at least 0.5 stack diameters from the exit to the atmosphere and at least 2.0 stack diameters from the upstream disturbance. All exhaust samples for gaseous emissions were continuously drawn from in the exhaust of the stack.

4.0 SAMPLING AND ANALYTICAL PROCEDURES

4.1 TEST METHODS

The emission test on the Caterpillar, G3306 TA, Unit #805709, Serial #R6S01337 at the McCarty 1-36H was performed following United States Environmental Protection Agency (EPA) methods described by the Code of Federal Regulations (CFR). Table 4.1 outlines the specific methods performed on May 29, 2015.

TABLE 4.1
SUMMARY OF SAMPLING METHODS

Pollutant or Parameter	Sampling Method	Analysis Method
Sample Point Location	EPA Method 1	Equal Area Method
Oxygen	EPA Method 3A	Paramagnetic Cell
Stack Moisture Content	EPA Method 4	Section 16.4 FFactor Based Calculation
Nitrogen Oxides	EPA Method 7E	Chemiluminescent Analyzer
Carbon Monoxide	EPA Method 10	Nondispersive Infrared Analyzer
Volatile Organic Compounds	EPA Method 18/25A	Gas Chromatograph and Flame Ionization Detector
Stack Flow Rate	EPA Method 19	Dry Oxygen F Factor

4.2 INSTRUMENT CONFIGURATION AND OPERATIONS FOR GAS ANALYSIS

The sampling and analysis procedures used during these tests conform with the methods outlined in the Code of Federal Regulations (CFR), Title 40, Part 60, Appendix A, Methods 1, 3A, 7E, 10, 18, 19 and 25.

Figure 4.1 depicts the sample system used for the real-time gas analyzer tests. The gas sample was continuously pulled through the probe and transported, via heat-traced Teflon® tubing, to a stainless steel minimum-contact condenser designed to dry the sample. Transportation of the sample, through Teflon® tubing, continued into the sample manifold within the mobile laboratory via a stainless steel/Teflon® diaphragm pump. From the manifold, the sample was partitioned to the real-time analyzers through rotameters that controlled the flow rate of the sample. Exhaust samples were routed to the wet based analyzer prior to gas conditioning.

Figure 4.1 shows that the sample system was also equipped with a separate path through which a calibration gas could be delivered to the probe and back through the entire sampling system. This allowed for convenient performance of system bias checks as required by the testing methods.

All instruments were housed in an air-conditioned, trailer-mounted mobile laboratory. Gaseous calibration standards were provided in aluminum cylinders with the concentrations certified by the vendor. EPA Protocol No. 1 was used to determine the cylinder concentrations where applicable (i.e. NOx calibration gases).

Table 4.2 provides a description of the analyzers used for the instrument portion of the tests. All data from the continuous monitoring instruments were recorded on a Logic Beach Portable Data Logging System Hyperlogger which retrieves calibrated electronic data from each instrument every one second and reports an average of the collected data every 30 seconds. Data records can be found in Appendix A and B of this report.

Three test runs of approximately 60 minutes each were conducted on the Caterpillar, G3306 TA, Unit #805709, Serial #R6S01337 with the unit operating within 10% of peak or highest achievable load for NOx, CO, VOC and O_2.

The stack gas analysis for O_2 concentrations was performed in accordance with procedures set forth in EPA Method 3A. The O_2 analyzer uses a paramagnetic cell detector.

EPA Method 7E was used to determine concentrations of NOx. A chemiluminescent analyzer was used to determine the nitrogen oxides concentration in the gas stream. A NO_2 in nitrogen certified gas cylinder was used to verify at least a 90 percent NO_2 conversion on the day of the test.

CO emission concentrations were quantified in accordance with procedures set forth in EPA Method 10. A continuous nondispersive infrared (NDIR) analyzer was used for this purpose.

VOC emission concentrations were quantified in accordance with principles set forth in EPA Method 18 and 25A. A VIG 210 was used for this purpose. The VIG 210 includes both a conventional total hydrocarbon (THC) analyzer and an automated gas chromatograph (GC) for determining VOCs. Two FIDs (flame ionization detectors) were used for the measurements: one for the THC channel and the other for the automated GC which measured methane, ethane, and residual (VOCs). During each sample period gas sample is injected directly to the first FID. This detector responded to all hydrocarbons in the sample and is used as a traditional FID as needed. For VOC sampling, a heated gas sampling valve is used for direct injection of the gas on the GC column per Method 18, Section 8.2.2. The GC column separates hydrocarbon components based on their molecular configurations, weights, and boiling points. In this application, the analyzer used the gas chromatograph column to separate methane and ethane from the heavier residual hydrocarbons (i.e. VOCs). Methane eluted from the sample first, it was immediately detected by the second FID; ethane eluted from the column second and was also detected by the second FID. The flow in the GC column was reversed (back-flushed) and the residual

components were recombined and detected by the second FID as residual VOCs. Peak residual (VOC) values are reported by the analyzer between each sample period. EPA Method 7E bias and drift check criterion was used to validate data instead of EPA Method 18 recovery studies as it is has more stringent and comprehensive quality assurance procedures. EPA Protocol No. 1 traceable propane calibration gas was used to calibrate the residual channel of the analyzer and the calibration procedure followed the requirements of EPA Method 25A. In this application, the target compound was VOC (non methane, non ethane hydrocarbon); therefore, the methane, ethane, and total hydrocarbon channels of the analyzer were not formally calibrated.

TABLE 4.2
ANALYTICAL INSTRUMENTATION

Parameter	Manufacturer and Model	Range	Sensitivity	Detection Principle
NOx	THERMO 42C	User may select up to 5,000 ppm	0.1 ppm	Thermal reduction of NO_2 to NO. Chemiluminescence of reaction of NO with O_3. Detection by PMT. Inherently linear for listed ranges.
CO	THERMO 48i	User may select up to 10,000 ppm	0.1 ppm	Infrared absorption, gas filter correlation detector, microprocessor based linearization.
VOC	VIG 210	User may select up to 10,000 ppm	0.1 ppm	GC Column and Flame Ionization Detector
O_2	SERVOMEX 1440	0-25%	0.1%	Paramagnetic cell, inherently linear.

COPYRIGHT © 2011 AIR HYGIENE INTERNATIONAL, INC.

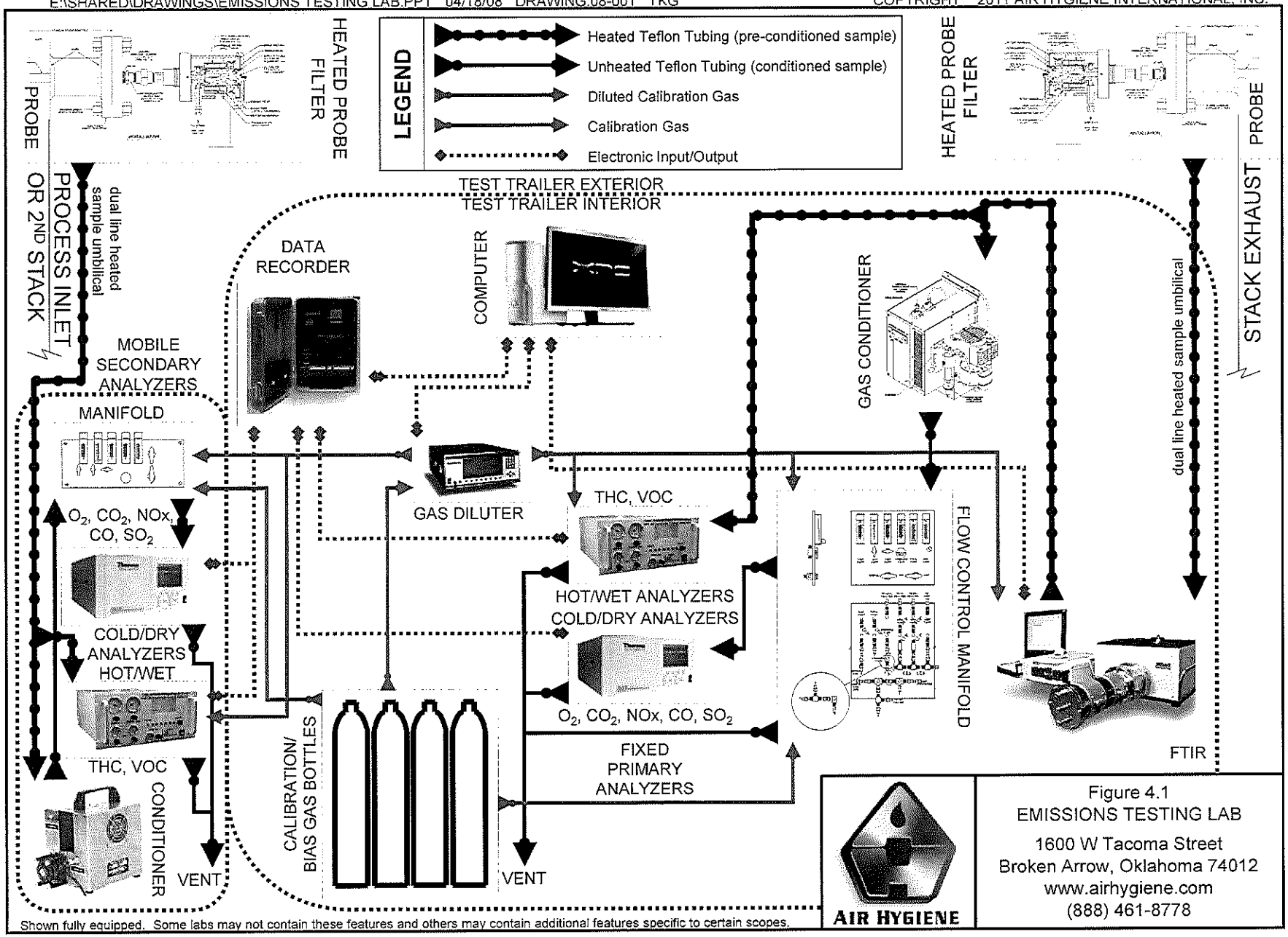

Shown fully equipped. Some labs may not contain these features and others may contain additional features specific to certain scopes.

Figure 4.1
EMISSIONS TESTING LAB

1600 W Tacoma Street
Broken Arrow, Oklahoma 74012
www.airhygiene.com
(888) 461-8778

APPENDIX A

TEST RESULTS AND CALCULATIONS

EMISSION CALCULATIONS SUMMARY TABLES

Company: XTO Energy, Inc.
Engine Tested: Caterpillar, G3306 TA, Unit #805709
Engine Serial #: R6S01337

Date: May 29, 2015
Location: McCarty 1-36H

Stack Gas Flow Rate: Method 19

Test #	Brake Horsepower	O_2 Conc. (%)	Fuel Heating [HHV] Value (Btu/SCF)	F Factor-Dry Oxy. (DSCFex/MMBtu)	Fuel Flow (SCF/hr)	Stack Flow (SCF/hr)
1	118	0.00	1,220	8,714.27	972	10,335
2	119	0.00	1,220	8,714.27	972	10,332
3	119	0.00	1,220	8,714.27	960	10,206
Average	118	0.00	1,220	8,714.27	968	10,291

NOx Mass Emission Rate

Test #	Brake Horsepower	NOx Conc. (ppmvd)	MW	E (g/hp*hr)	E (lb/hr)	E (ton/yr)
1	118	56.35	46.01	0.27	0.07	0.30
2	119	28.21	46.01	0.13	0.03	0.15
3	119	27.90	46.01	0.13	0.03	0.15
Average	118	37.49	46.01	0.18	0.05	0.20

NOx @15%O_2 Concentration

Test #	Brake Horsepower	NOx Conc. (ppmvd)	NOx @15%O_2 (ppmvd)
1	118	56.35	15.91
2	119	28.21	7.96
3	119	27.90	7.87
Average	118	37.49	10.58

CO Mass Emission Rate

Test #	Brake Horsepower	CO Conc. (ppmvd)	MW	E (g/hp*hr)	E (lb/hr)	E (ton/yr)
1	118	434.88	28.00	1.26	0.33	1.43
2	119	307.56	28.00	0.88	0.23	1.01
3	119	274.21	28.00	0.78	0.20	0.89
Average	118	338.88	28.00	0.97	0.25	1.11

CO @15%O_2 Concentration

Test #	Brake Horsepower	CO Conc. (ppmvd)	CO @15%O_2 (ppmvd)
1	118	434.88	122.77
2	119	307.56	86.80
3	119	274.21	77.40
Average	118	338.88	95.66

VOC Mass Emission Rate

Test #	Brake Horsepower	VOC Conc. (ppmvd)	MW	E (g/hp*hr)	E (lb/hr)	E (ton/yr)
1	118	13.59	44.00	0.06	0.02	0.07
2	119	12.06	44.00	0.05	0.01	0.06
3	119	10.74	44.00	0.05	0.01	0.05
Average	118	12.13	44.00	0.05	0.01	0.06

VOC @15%O_2 Concentration

Test #	Brake Horsepower	VOC Conc. (ppmvd)	VOC @15%O_2 (ppmvd)
1	118	13.59	3.84
2	119	12.06	3.40
3	119	10.74	3.03
Average	118	12.13	3.42

Calculations, Formulas, and Constants

The following information supports the spreadsheets for this testing project.

Given Data:

Ideal Gas Conversion Factor = 385.23 SCF/lb-mol at 68 deg F & 14.696 psia

Fuel Heating Value is based upon Air Hygiene's fuel gas calculation sheet. All calculations are based upon a correction to 68 deg F & 14.696 psia

High Heating Values (HHV) are used for the Fuel Heating Value, F-Factor, and Fuel Flow Data per EPA requirements.

ASTM D 3588

Molecular Weight of NOx (lb/lb-mole) = 46.01
Molecular Weight of CO (lb/lb-mole) = 28.00
Molecular Weight of SO_2 (lb/lb-mole) = 64.00
Molecular Weight of THC (propane) (lb/lb-mole) = 44.00
Molecular Weight of VOC (methane) (lb/lb-mole) = 16.00
Molecular Weight of NH_3 (lb/lb-mole) = 17.03
Molecular Weight of HCHO (lb/lb-mole) = 30.03

40CFR60, App. A., RM 19, Table 19-1

Conversion Constant for NOx = 0.0000001194351
Conversion Constant for CO = 0.0000000726839
Conversion Constant for SO_2 = 0.0000001661345
Conversion Constant for THC = 0.0000001142175
Conversion Constant for VOC (methane) = 0.0000000415336
Conversion Constant for NH_3 = 0.0000000442074
Conversion Constant for HCHO = 0.0000000779534
NOTE: units are lb/ppm*ft^3

Formulas:

1. Corrected Raw Average (C_{Gas}), 40CFR60, App. A, RM 7E, Eq. 7E-5 (08/15/06)

$$C_{Gas} = (C_{Avg} - C_O) \times \left(\frac{C_M}{C_M - C_O} \right)$$

2. Correction to % O_2, 40CFR60, App. A, RM 20, Eq. 20-5 (11/26/02)

$$C_{adj} = C_{Gas(Target)} \times \left(\frac{20.9\% - AdjFactor}{20.9\% - C_{Gas(O2)}} \right)$$

3. Correction to % O_2 and ISO Conditions

$$C_{ISO} = C_{Adj} \times \sqrt{\frac{P_r}{P_o}} \times e^{(19 \times (H_O - 0.00633))} \times \left(\frac{288}{T_a} \right)^{1.53}$$

4. Method 19 stack exhaust flow (scfh)

$$Q_s = \left(\frac{FFactor \times Q_f \times HHV}{1{,}000{,}000} \right) \times \left(\frac{20.9\%}{20.9\% - C_{Gas(O2)}} \right)$$

5. Emission Rate in lb/hr

$$E_{lb/hr} = \frac{C_{Gas}}{10^6} \times \frac{Q_S \times MW}{G}$$

6. Emission Rate in tons per year

$$E_{ton/yr} = \frac{E_{lb/hr} \times hr_{year}}{2000}$$

7. Emission Concentration in lb/MMBtu (O_2 based)

$$E_{lb/MMBtu} = \frac{C_{Gas} \times F_d Factor \times Conv_C \times 20.9\%}{20.9\% - C_{Gas(O2)}}$$

8. Emission Concentration in g/hp*hr

$$E_{g/hp\,hr} = \frac{E_{lb/hr} \times 453.6}{mw \times 1341.022} \; or \; \frac{E_{lb/hr} \times 453.6}{hp}$$

EXAMPLE CALCULATIONS (FFACTOR)

RM 19, (02-27-14), 2.0 Summary of Method, 2.1 Emission Rates. Oxygen (O_2) or carbon dioxide (CO_2) concentrations and appropriate F factors (ratios of combustion gas volumes to heat inputs) are used to calculate pollutant emission rates from pollutant concentrations.

RM 19, (02-27-14), 12.2 Emission Rates of PM, SO_2, and NOx. Select from the following sections the applicable procedure to compute the PM, SO_2, or NOx emission rate (E) in lb/MMBtu. The pollutant concentration must be in lb/scf and the F factor must be in scf/MMBtu. If the pollutant concentration (C) is not in the appropriate units, use Table 19–1 in Section 17.0 to make the proper conversion. An F factor is the ratio of the gas volume of the products of combustion to the heat content of the fuel. The dry F factor (F_d) includes all components of combustion less water, the wet F factor (F_w) includes all components of combustion, and the carbon F factor (F_c) includes only carbon dioxide.

Mark's Std Hdbk, 10th ed.,pg 4-26
High Heat Value Dry (HHV_{dry}), calc for Methane (single component for the fuel gas)

$$HHV_{dry}(Btu/SCF) = \left[\left(\frac{M_{\%}}{100}\right) \times GCM\right]$$

$$HHV_{dry} = \frac{78.45\ \%}{100.00} \times \frac{994.85\ Btu}{SCF} = \frac{780.43\ Btu}{SCF}$$

Mark's Std Hdbk, 10th ed., pg 4-26
Low Heat Value Dry (LHV_{dry}), calc for Methane (single component for the fuel gas)

$$LHV_{dry}(Btu/SCF) = \left[\left(\frac{M_{\%}}{100}\right) \times NCM\right]$$

$$LHV_{dry} = \frac{78.45\ \%}{100.00} \times \frac{895.75\ Btu}{SCF} = \frac{702.70\ Btu}{SCF}$$

Civil Eng. Ref. Man.,7th Ed.,pg 14-9/GPA Ref. Bulletin 181-86, App. C
High Heat Value Wet (HHV_{wet}), calc for entire sample (all components of the fuel gas)

$$HHV_{wet}(Btu/SCF) = \frac{HHV_{dry}}{W/D.factor}$$

$$HHV_{wet} = \frac{1{,}220.09\ Btu/SCF}{1.0236} = 1{,}191.96\ Btu/SCF$$

Civil Eng. Ref. Man.,7th Ed.,pg 14-9/GPA Ref. Bulletin 181-86, App. C
Low Heat Value Wet (LHV_{wet}), calc for entire sample (all components of the fuel gas)

$$LHV_{wet}(Btu/SCF) = \frac{LHV_{dry}}{W/D.factor}$$

$$LHV_{wet} = \frac{1{,}106.61\ Btu/SCF}{1.0236} = 1{,}081.10\ Btu/SCF$$

Lbs Component per Lb-Mol of Gas (CM), calc for Methane (single component for the fuel gas)

$$CM(lb/lb-mol) = \left[\left(\frac{M_{\%}}{100}\right) \times MW\right]$$

$$CM = \frac{78.45\ \%}{100.00} \times \frac{16.04\ lb}{lb\text{-}mol} = 12.59\ lb/lb\text{-}mol$$

ASTM D 3588
Fuel Molecular Weight (MW_{Fuel})

$$MW_{Fuel}(lb/lb\cdot mol) = \left[\sum (CM)\right]$$

MW_{Fuel} = 12.59 lb/lb-mol
+ 3.43 lb/lb-mol
+ etc. = 21.005 lb/lb-mol

Btu per Lb of Gas Gross (**GCV**)

$$GCV\ (Btu/lb) = \left[\frac{HHV_{dry} \times G}{MW_{Fuel}}\right]$$

$$GCV = \frac{1{,}220.09\ Btu/SCF \times 385.23\ ft^3/lbmol}{21.005\ lb/lb\text{-}mol} = 22{,}376.22\ Btu/lb$$

ASTM D 3588 (SG)
Specific Gravity

$$SG = \left[\frac{MW_{Fuel}}{MW_{AIR}}\right]$$

$$SG = \frac{21.01\ lb/lb\text{-}mol}{28.96\ lb/lb\text{-}mol} = 0.7253$$

Btu per Lb of Gas Net (**NCV**)

$$NCV\ (Btu/lb) = \left[\frac{LHV_{dry} \times G}{MW_{Fuel}}\right]$$

$$NCV = \frac{1{,}106.61\ Btu/SCF \times 385.23\ ft^3/lbmol}{21.005\ lb/lb\text{-}mol} = 20{,}294.98\ Btu/lb$$

Weight Percent of Component ($C_{\%}$), methane

$$C_{\%}(\%) = \left[\left(\frac{CM}{MW_{Fuel}}\right) \times 100\right]$$

$$C_{\%} = \frac{12.59\ lb/lb\text{-}mol}{21.01\ lb/lb\text{-}mol} \times 100 = 59.92\ \%$$

Weight Percent of Volatile Organic Compounds ($VOC_{\%}$)

$$VOC_{\%}(\%) = \left[\sum_{C_3H_8}^{C_6H_{14}} M_{\%}\right]$$

$VOC_{\%}$ = 9.69 % + 1.64 % + 4.19 % + etc. = 20.63 %

RM 19, (02-27-14), 12.3.2 Determined **F Factors**. If the fuel burned is not listed in Table 19–2 or if the owner or operator chooses to determine an F factor rather than use the values in Table 19–2, use the procedure below: 12.3.2.1 Equations. Use the eq

RM 19, (02-27-14), 12.1 Nomenclature

K (scf/lb)/%	
H	3.64
C	1.53
S	0.57
N_2	0.14
O_2	0.46

$$F_d = \frac{K(K_{hd}\%H + K_c\%C + K_s\%S + K_n\%N - K_o\%O)}{GCV} \qquad \text{Eq. 19-13}$$

$$F_d = \frac{10^6 Btu}{MMBtu} \times \left[\frac{3.64\ SCF}{lb\cdot\%} \times 21.98\ \% + \frac{1.53\ SCF}{lb\cdot\%} \times 75.22\ \% + \frac{0.57\ SCF}{lb\cdot\%} \times 0.00\ \% + \frac{0.14\ SCF}{lb\cdot\%} \times 1.98\ \% - \frac{0.46\ SCF}{lb\cdot\%} \times 0.82\ \%\right] \times \frac{lb}{22{,}376.22\ Btu} = \frac{8{,}714.27\ SCF}{MMBtu}$$

Note: Lack of significant figures may cause rounding errors between actual calculations and example calculations.

EXAMPLE CALCULATIONS (INFORMATION)

Specific Humidity (RH_{sp})

Note: RHsp (gr/lb) calculated using temperature, relative humidity, and barometric pressure with psychrometric chart, psychrometric calculator, or built in psychrometric algorithm.

$$RH_{sp}(lb/lb) = \left[\left(\frac{gr}{lb}\right) \times \frac{lb}{7000\ gr}\right]$$

$$RH_{sp} = \frac{89.66\ gr}{lb} \times \frac{1\ lb}{7000\ gr} = 0.012808 \frac{lb\ H_2O}{lb\ Air}$$

Calculated Stack Gas Moisture Content (B_{ws})

RM 4, (02-27-14), 16.4 Using F-factors to determine moisture is an acceptable alternative to Method 4 for a combustion stack not using a scrubber. If this option is selected, calculate the moisture content as follows: [with corrected equations from the Final Rule: Revisions to Test Methods and Testing Regulations]

$$B_{ws}(\%) = B_H(\%) + B_A(\%) + B_F(\%)$$

B_{WS} = 17.91 % + 2.02 % + 0.17 % = 20.09 %

$$B_{ws}(\%) = \left[\left(1 - \frac{F_d}{F_w}\right)\left(\frac{20.9 - O_2}{20.9}\right)\right] + \left[\left(\frac{\%RH}{100 \times P_{Bar}}\right) \times 10^{\left\{6.6912 - \left(\frac{3144}{T + 390.86}\right)\right\}}\right] + \left[\left(\frac{0.0036 \times \left\{2.36 \times \frac{18.015}{MW_{Gas}}\right\}^2 + 0.075 \times \left\{2.36 \times \frac{18.015}{MW_{Gas}}\right\}}{100}\right)\left(\frac{20.9 - O_2}{20.9}\right)\right]$$

B_H = mole fraction of moisture from the hydrogen in fuel

$$B_H(\%) = \left\{1 - \frac{8710.0}{10610.0}\right\}\left\{\frac{20.9 - 0.00}{20.9}\right\} = 17.91\ \%$$

W (%, by weight) = 2.36 mol% x $\frac{18.015}{21.005}$ = 2.0240 %

2.36 mol% = %H_2O (mol%) at EPA Standard Conditions (68°F and 14.696psia); MW_{water} = 18.015 lb/lb-mol

B_A = mole faction of moisture in the ambient air

$$B_A(\%) = \frac{68}{100 \times 30.51} \times 10^{\left\{6.6912 - \frac{3144}{76 + 390.86}\right\}} = 2.02\ \%$$

B_F = mole faction of moisture from free water in the fuel

$$B_F(\%) = \left\{\frac{0.0036 \times 2.0240^2 + 0.075 \times 2.0240}{100}\right\}\left\{\frac{20.9 - 0.00}{20.9}\right\} = 0.17\ \%$$

Note: Lack of significant figures may cause rounding errors between actual calculations and example calculations.

EXAMPLE CALCULATIONS (CALIBRATION)

Analyzer Calibration Error

RM 7E, (02-27-14), 12.2 Analyzer Calibration Error. For non-dilution systems, use Equation 7E-1 to calculate the analyzer calibration error for the low-, mid-, and high-level calibration gases. (calc for NOx analyzer mid gas, if applicable)

$$ACE = \left(\frac{C_{Dir} - C_V}{CS}\right) \times 100 \qquad \text{Eq. 7E-1}$$

$$ACE = \frac{250.38\ ppm - 251.00\ ppm}{482.70\ ppm} \times 100 = -0.13\ \%$$

Calibration Error and Estimated Point, RM 25A, THC/VOC Analyzer

RM 25A, (02-27-14), 8.4 Calibration Error Test. Immediately prior to the test series (within 2 hours of the start of the test), introduce zero gas and high-level calibration gas at the calibration valve assembly. Adjust the analyzer output to the appropriate levels, if necessary. Calculate the predicted response for the low-level and mid-level gases based on a linear response line between the zero and high-level response. Then introduce low-level and mid-level calibration gases successively to the measurement system. ... These differences must be less than 5 percent of the respective calibration gas value. (calc for THC/VOC analyzer mid gas, if applicable)

$$E_P = \frac{C_{Dir(H)} - C_{Dir(Z)}}{C_{V(H)} - C_{V(Z)}} \times C_{Dir(M)} + C_{Dir(Z)}$$

Eq. of a line y=mx+b

$$E_p = \frac{86.04\ ppm - 0.00\ ppm}{85.50\ ppm - 0.00\ ppm} \times 45.10\ ppm + 0.00 = 45.38\ ppm$$

$$ACE = \left(\frac{C_{Dir} - C_V}{CS}\right) \times 100 \qquad \text{Eq. 7E-1}$$

$$ACE_{voc} = \frac{45.33\ ppm - 45.38\ ppm}{45.10\ ppm} \times 100 = -0.12\ \%$$

Note: Lack of significant figures may cause rounding errors between actual calculations and example calculations.

EXAMPLE CALCULATIONS (BIAS, DRIFT, AND CORRECTED RAW AVERAGE)

System Bias

RM 7E, (02-27-14), 12.3 System Bias. For non-dilution systems, use Equation 7E-2 to calculate the system bias separately for the low-level and upscale calibration gases. (calc for NOx analyzer upscale gas, Run 1 initial bias, if applicable)

$$SB = \left(\frac{C_S - C_{Dir}}{CS}\right) \times 100$$ Eq. 7E-2

$$SB = \frac{244.38 \text{ ppm} - 250.38 \text{ ppm}}{482.70 \text{ ppm}} \times 100 = -1.24 \ \%$$

Drift Assessment

RM 7E, (02-27-14), 12.5 Drift Assessment. Use Equation 7E-4 to separately calculate the low-level and upscale drift over each test run. (calc for NOx analyzer upscale drift, Run 1, if applicable)

$$D = \left|SB_{final} - SB_i\right|$$ Eq. 7E-4

$$D = |\ -0.81\ \% - -1.24\ \%\ | = 0.44\ \%$$

Bias Adjusted Average

RM 7E, (02-27-14), 12.6 Effluent Gas Concentration. For each test run, calculate Cavg, the arithmetic average of all valid NOx concentration values (e.g., 1-minute averages). Then adjust the value of Cavg for bias, using Equation 7E-5b. (calc for NOx analyzer, Run 1, if applicable)

$$C_{Gas} = \left(C_{Avg} - C_O\right) \times \left(\frac{C_{MA}}{C_M - C_O}\right)$$ Eq. 7E-5b

$$C_{Gas} = \left(55.80 \text{ ppm} - 0.91 \text{ ppm}\right) \times \left(\frac{251.00 \text{ ppm}}{245.44 \text{ ppm} - 0.91 \text{ ppm}}\right) = 56.35 \text{ ppm}$$

EXAMPLE CALCULATIONS (Brake Horsepower)

Brake Horsepower (bhp)

BHP = hp_a x Load

$$BHP = 171 \text{ hp} \times \frac{69\ \%}{100} = 118 \text{ hp}$$

Available Horsepower (hp_a)

$$hp_a = \text{Rated Horsepower} \times \frac{\text{actual rpm}}{\text{rated rpm}}$$

$$hp_a = 203 \text{ hp} \times \frac{1{,}520 \text{ rpm}}{1{,}800 \text{ rpm}} = 171 \text{ hp}$$

Load (%)

$$\text{Load (\%)} = \frac{\text{actual Air Manifold Pressure}}{\text{rated Air Manifold Pressure}}$$

$$\text{Load} = \frac{26 \text{ in. Hg (abs)}}{39 \text{ in. Hg (abs)}} = 69\ \%$$

EXAMPLE CALCULATIONS (BSFC)

Using LHV with Q_f (SCFH)

$$BSFC\,(Btu/hp \cdot hr) = \frac{LHV \times Q_f}{bhp}$$

$$BSFC = \frac{1{,}107 \text{ Btu}}{\text{SCF}} \times \frac{968 \text{ SCF}}{\text{hr}} \times \frac{1}{118 \text{ hp}} = \frac{9{,}053 \text{ Btu}}{\text{hp*hr}}$$

Note: Lack of significant figures may cause rounding errors between actual calculations and example calculations.

EXAMPLE CALCULATIONS (RUNS)

Stack Exhaust Flow (Q_S) - RM19

$$Q_S = \left(\frac{FFactor \times Q_f \times HHV}{1{,}000{,}000}\right) \times \left(\frac{20.9\%}{20.9\% - C_{Gas(O2)}}\right)$$

$$Q_S = \frac{8{,}714.27\ SCF}{MMBtu} \times \frac{972.00\ SCF}{hr} \times \frac{1{,}220.09\ Btu}{SCF} \times \frac{MMBtu}{10^6\ Btu} \times \left(\frac{20.90\%}{20.9\% - 0.0\ \%}\right) = 10{,}334.52\ SCFH$$

Moisture Correction

RM 7E, (02-27-14), 12.10 Moisture Correction. Use Equation 7E-10 if your measurements need to be corrected to a dry basis. (calc for NOx analyzer, Run 1, if applicable) Note: Calculations may not match as Run 1 results are typically also bias adjusted

$$C_W = C_D \times (1 - B_{WS})$$

$$C_D = \frac{C_W}{1 - B_{WS}} \quad \text{Eq. 7E-10} \quad C_D = \frac{45.03\ ppmvw}{1 - 0.20} = 56.35\ ppmvd$$

or inversely, $C_W = 56.35\ ppmvd \times \left(1 - 0.20\right) = 45.03\ ppmvw$

Diluent-Corrected Pollutant Concentration, O_2 Based

RM 20, (11-26-02), 7.3.1 Correction of Pollutant Concentration Using O_2 Concentration. Calculate the O_2 corrected pollutant concentration, as follows: (calc for NOx gas, Run 1, if applicable) [now contained in applicable Subpart]

$$C_{adj} = C_{Gas(Target)} \times \left(\frac{20.9\% - AdjFactor}{20.9\% - C_{Gas(O2)}}\right) \quad \text{Eq. 20-4}$$

$$C_{adj} = 56.35\ ppm \times \left(\frac{20.9\% - 15.00\ \%}{20.9\% - 0.00\ \%}\right) = 15.91\ ppm@15\%O_2$$

EXAMPLE CALCULATIONS (RUNS)

Emissions Rate (lb/hr)

Calculation for pound per hour emission rate. Calculate, as follows: (calc for NOx gas Run 1, if applicable)

$$E_{lb/hr} = \frac{C_{Gas}}{10^6} \times \frac{Q_S \times MW}{G}$$

$$E_{lb/hr} = \frac{56.35\ ppm}{10^6\ ppm/part} \times \frac{10{,}335\ SCFH \times 46.01\ lb/lb\text{-}mol}{385.23\ SCF/lb\text{-}mol} = \frac{0.07\ lb}{hr}$$

Emissions Rate (ton/year)

Calculation for tons per year emission rate based on 8760 hours per year. Calculate, as follows: (calc for NOx gas Run 1, if applicable)

$$E_{ton/yr} = \frac{E_{lb/hr} \times hr_{year}}{2000}$$

$$E_{ton/yr} = \frac{0.07\ lb}{hr} \times \frac{8{,}760\ hr}{year} \times \frac{ton}{2000\ lb} = \frac{0.30\ ton}{year}$$

Emissions Rate (g/hp-hr)

Calculation for grams per horsepower-hour. Calculate, as follows: (calc for NOx gas Run 1, if applicable)

$$E_{g/hp\text{-}hr} = \frac{E_{lb/hr} \times 453.6}{mw \times 1341.022} \text{ or } \frac{E_{lb/hr} \times 453.6}{hp}$$

$$E_{g/hp\text{-}hr} = \frac{0.07\ lb}{hr} \times \frac{453.6\ g}{lb} \times \frac{1}{118\ hp} = \frac{0.27\ g}{hp*hr}$$

Note: Lack of significant figures may cause rounding errors between actual calculations and example calculations.

RM 7E, (08-15-06), 12.1 Nomenclature. The terms used in the equations are defined as follows:

ACE = Analyzer calibration error, percent of calibration span.
B_{WS} = Moisture content of sample gas as measured by Method 4 or other approved method, percent/100.
C_{Avg} = Average unadjusted gas concentration indicated by data recorder for the test run.
C_D = Pollutant concentration adjusted to dry conditions.
C_{Dir} = Measured concentration of a calibration gas (low, mid, or high) when introduced in direct calibration mode.
C_{Gas} = Average effluent gas concentration adjusted for bias.
C_{tA} = Average of initial and final system calibration bias (or 2-point system calibration error) check responses for the upscale calibration gas.
C_{MA} = Actual concentration of the upscale calibration gas, ppmv.
C_O = Average of the initial and final system calibration bias (or 2-point system calibration error) check responses from the low-level (or zero) calibration gas.
C_S = Measured concentration of a calibration gas (low, mid, or high) when introduced in system calibration mode.
C_{SS} = Concentration of NOx measured in the spiked sample.
C_{Spike} = Concentration of NOx in the undiluted spike gas.
C_{Calc} = Calculated concentration of NOx in the spike gas diluted in the sample.
C_V = Manufacturer certified concentration of a calibration gas (low, mid, or high).
C_W = Pollutant concentration measured under moist sample conditions, wet basis.
CS = Calibration span.
D = Drift assessment, percent of calibration span.
E_p = The predicted response for the low-level and mid-level gases based on a linear response line between the zero and high-level response.
Eff_{NO2} = NO_2 to NO converter efficiency, percent.
H = High calibration gas, designator.
L = Low calibration gas, designator.
M = Mid calibration gas, designator.
NOFinal = The average NO concentration observed with the analyzer in the NO mode during the converter efficiency test in Section 16.2.2.
NOxCorr = The NOx concentration corrected for the converter efficiency.
NOxFinal = The final NOx concentration observed during the converter efficiency test in Section 16.2.2.
NOxPeak = The highest NOx concentration observed during the converter efficiency test in Section 16.2.2.
Q_{Spike} = Flow rate of spike gas introduced in system calibration mode, L/min.
Q_{Total} = Total sample flow rate during the spike test, L/min.
R = Spike recovery, percent.
SB = System bias, percent of calibration span.
SB_i = Pre-run system bias, percent of calibration span.
SB_f = Post-run system bias, percent of calibration span.
SB / D_{Alt} = Alternative absolute difference criteria to pass bias and/or drift checks.
SCE = System calibration error, percent of calibration span.
SCE_i = Pre-run system calibration error, percent of calibration span.
SCE_{final} = Post-run system calibration error, percent of calibration span.
Z = Zero calibration gas, designator.

40CFR60.355(b)(1), (09-20-06), Nomenclature. The terms used in the equations are defined as follows:

P_r = reference combustor inlet absolute pressure at 101.3 kilopascals ambient pressure, mm Hg
P_o = observed combustor inlet absolute pressure at test, mm Hg
H_o = observed humidity of ambient air, g H_2O/g air
e = transcendental constant, 2.718
T_a = ambient temperature, K

Small Engine and FTIR Nomenclature. The terms used in the equations are defined as follows:

bhp = brake horsepower
hp = horsepower
Q_{sys} = system flow (lpm)
Q_m = matrix spike flow (lpm)

RM 19, (07-29-06), 12.1 Nomenclature. The terms used in the equations are defined as follows:

AdjFactor = Percent oxygen or carbon dioxide adjustment applied to a target pollutant
B_{wa} = Moisture fraction of ambient air, percent.
Btu = British thermal unit
$\%_C$ = Concentration of carbon from an ultimate analysis of fuel, weight percent.
$\%_{CO2d}, \%_{CO2w}$ = Concentration of carbon dioxide on a dry and wet basis, respectively, percent.
CIP / CDP = Combustor inlet pressure / compressor discharge pressure (mm Hg); note, some manufactures reference as PCD.
E = Pollutant emission rate, ng/J (lb/million Btu).
E_a = Average pollutant rate for the specified performance test period, ng/J (lb/million Btu).
E_{ao}, E_{ai} = Average pollutant rate of the control device, outlet and inlet, respectively, for the performance test period, ng/J (lb/million Btu).
E_{bi} = Pollutant rate from the steam generating unit, ng/J (lb/million Btu).
E_{bo} = Pollutant emission rate from the steam generating unit, ng/J (lb/million Btu).
E_{ci} = Pollutant rate in combined effluent, ng/J (lb/million Btu).
E_{co} = Pollutant emission rate in combined effluent, ng/J (lb/million Btu).
E_d = Average pollutant rate for each sampling period (e.g.,24-hr Method 6B sample or 24-hr fuel sample) or for each fuel lot (e.g., amount of fuel bunkered), ng/J (lb/million Btu)
E_{di} = Average inlet SO_2 rate for each sampling period d, ng/J (lb/million Btu).
E_g = Pollutant rate from gas turbine, ng/J (lb/million Btu).
E_{ga} = Daily geometric average pollutant rate, ng/J (lbs/million Btu) or ppm corrected to 7 percent O_2.
E_{jo}, E_{ji} = Matched pair hourly arithmetic average pollutant rate, outlet and inlet, respectively, ng/J (lb/million Btu) or ppm corrected to 7 percent O_2.
E_h = Hourly average pollutant, ng/J (lb/million Btu).
E_{hj} = Hourly arithmetic average pollutant rate for hour "j," ng/J (lb/million Btu) or ppm corrected to 7 percent O_2.
EXP = Natural logarithmic base (2.718) raised to the value enclosed by brackets.
Fc = Ratio of the volume of carbon dioxide produced to the gross calorific value of the fuel from Method 19
F_d, F_w, F_c = Volumes of combustion components per unit of heat content, scm/J (scf/million Btu).
ft^3 = cubic feet
G = ideal gas conversion factor
(385.23 SCF/lb-mol at 68 deg F & 14.696 psia)
GCM = gross Btu per SCF (constant, compound based)
GCV = Gross calorific value of the fuel consistent with the ultimate analysis, kJ/kg (Btu/lb).
GCV_p, GCV_r = Gross calorific value for the product and raw fuel lots, respectively, dry basis, kJ/kg (Btu/lb).
$\%_H$ = Concentration of hydrogen from an ultimate analysis of fuel, weight percent.
H_b = Heat input rate to the steam generating unit from fuels fired in the steam generating unit, J/hr (million Btu/hr).
H_g = Heat input rate to gas turbine from all fuels fired in the gas turbine, J/hr (million Btu/hr).
$\%_{H2O}$ = Concentration of water from an ultimate analysis of fuel, weight percent.
H_r = Total numbers of hours in the performance test period (e.g., 720 hours for 30-day performance test period).
K = volume of combustion component per pound of component (constant)
K = Conversion factor, 10^{-5} (kJ/J)/(%) [10^6 Btu/million Btu].
K_c = (9.57 scm/kg)/% [(1.53 scf/lb)/%].
K_{co} = (2.0 scm/kg)/% [(0.321 scf/lb)/%].
K_{hd} = (22.7 scm/kg)/% [(3.64 scf/lb)/%].
K_{hw} = (34.74 scm/kg)/% [(5.57 scf/lb)/%].
K_n = (0.86 scm/kg)/% [(0.14 scf/lb)/%].
K_o = (2.85 scm/kg)/% [(0.46 scf/lb)/%].
K_s = (3.54 scm/kg)/% [(0.57 scf/lb)/%].
K_{sulfur} = $2x10^4$ Btu/wt%-MMBtu
K_w = (1.30 scm/kg)/% [(0.21 scf/lb)/%].
lb = pound
ln = Natural log of indicated value.
L_p, L_r = Weight of the product and raw fuel lots, respectively, metric ton (ton).
$\%_N$ = Concentration of nitrogen from an ultimate analysis of fuel, weight percent.
$M_{\%}$ = mole percent
mol = mole
MW = molecular weight (lb/lb-mol)
MW_{AIR} = molecular weight of air (28.9625 lb/lb-mole)[1]
NCM = net Btu per SCF (constant based on compound)
$\%_O$ = Concentration of oxygen from an ultimate analysis of fuel, weight percent.
$\%_{O2d}, \%_{O2w}$ = Concentration of oxygen on a dry and wet basis, respectively, percent.
P_B = barometric pressure, in Hg
P_s = Potential SO2 emissions, percent.
$\%_S$ = Sulfur content of as-fired fuel lot, dry basis, weight percent.
S_e = Standard deviation of the hourly average pollutant rates for each performance test period, ng/J (lb/million Btu).
$\%_{Sf}$ = Concentration of sulfur from an ultimate analysis of fuel, weight percent.
S(wt%) = weight percent of sulfur, per lab analysis by appropriate ASTM standard
S_i = Standard deviation of the hourly average inlet pollutant rates for each performance test period, ng/J (lb/million Btu).
S_o = Standard deviation of the hourly average emission rates for each performance test period, ng/J (lb/million Btu).
$\%S_p, \%S_r$ = Sulfur content of the product and raw fuel lots respectively, dry basis, weight percent.
SCF = standard cubic feet
SH = specific humidity, pounds of water per pound of air
$t_{0.95}$ = Values shown in Table 19-3 for the indicated number of data points n.
T_{amb} = ambient temperature, °F
W/D Factor = 1.0236 = conv. at 14.696 psia and
68 deg F (ref. Civil Eng. Ref. Manual, 7th Ed.)
X_{CO2}=CO_2 Correction factor, percent.
X_k = Fraction of total heat input from each type of fuel k.

APPENDIX B

EMISSION DATA RECORDS

XTO Energy, Inc.

Federal Requirements :	40 CFR 60, JJJJ
Plant Name or Location:	McCarty 1-36H
Date:	May 29, 2015
Project Number:	xto-15-multi.ok-eng#8
Manufacturer & Equipment:	Caterpillar
Model:	G3306 TA
Serial Number:	R6S01337
Unit Number:	805709
Tester(s) / Test Unit(s):	RW/162/208

		RUN		
	UNITS	**1**	**2**	**3**
Start Time	hh:mm:ss	11:15:14	12:25:14	13:26:14
End Time	hh:mm:ss	12:14:44	13:24:44	14:25:44
Bar. Pressure	in. Hg	30.51	30.53	30.53
Amb. Temp.	°F	76	78	78
Rel. Humidity	%	68	69	69
Spec. Humidity	lb water / lb air	0.012808	0.013902	0.013902
Engine Fuel Flow	SCFH	972	972	960
Stack Moisture	% Calculated	20.09	20.26	20.26
Brake Horsepower	bhp	118	119	119
Rated Horsepower	hp_r	203	203	203
Rated Engine Speed	rpm	1,800	1,800	1,800
Rated Manifold Pressure	in. Hg (abs)	38.5	38.5	38.5
Available Horsepower	hp_a	171	171	171
Engine Load	%	69	69	69
Engine Speed	rpm	1,520	1,517	1,518
Air Manifold Pressure	psia	13.0	13.1	13.1
Air Manifold Temp	°F	112	113	113
Suction Pressure	psi	57.8	57.6	57.8
Discharge Pressure	psi	932	930	928
Operating Hours	hours	4,200		

-Brake horsepower based on available horsepower multiplied by load.
-Available horsepower based on the engine speed ratio (actual vs rated), see Engine Spec Sheet, Appendix B.
-Load based on the air manifold ratio (actual vs rated), see Engine Spec Sheet, Appendix B.

Comp&RATA&Eng-AHI v6.2: January 27, 2015

XTO Energy, Inc.
May 29, 2015
Caterpillar, G3306 TA, Unit #805709, Serial #R6S01337
McCarty 1-36H

Run - 1

Date/Time (mm/dd/yy hh:mm:ss)	Elapsed Time (seconds)	O_2 (%)	NOx (ppmvd)	CO (ppmvd)	VOC (ppmvw)
05/29/15 11:15:14	63404	0.02	42.76	247.80	12.79
05/29/15 11:15:44	63434	0.03	30.90	230.92	12.81
05/29/15 11:16:14	63464	0.03	59.33	392.49	12.86
05/29/15 11:16:44	63494	0.02	76.21	501.87	11.89
05/29/15 11:17:14	63524	0.02	84.82	324.96	9.52
05/29/15 11:17:44	63554	0.02	89.82	343.70	9.36
05/29/15 11:18:14	63584	0.02	87.57	660.28	9.45
05/29/15 11:18:44	63614	0.02	104.28	494.48	9.50
05/29/15 11:19:14	63644	0.02	92.50	370.72	9.45
05/29/15 11:19:44	63674	0.02	79.50	583.42	9.29
05/29/15 11:20:14	63704	0.02	142.11	812.28	9.39
05/29/15 11:20:44	63734	0.03	137.46	680.61	9.72
05/29/15 11:21:14	63764	0.02	119.13	662.77	9.62
05/29/15 11:21:44	63794	0.02	43.41	684.42	9.38
05/29/15 11:22:14	63824	0.02	86.37	589.86	9.44
05/29/15 11:22:44	63854	0.02	61.51	843.13	9.58
05/29/15 11:23:14	63884	0.02	54.48	838.42	9.54
05/29/15 11:23:44	63914	0.02	73.07	957.45	9.43
05/29/15 11:24:14	63944	0.02	146.32	586.16	9.36
05/29/15 11:24:44	63974	0.02	37.34	549.28	11.90
05/29/15 11:25:14	64004	0.02	89.96	870.91	16.90
05/29/15 11:25:44	64034	0.02	84.53	471.20	16.89
05/29/15 11:26:14	64064	0.02	82.65	491.87	16.96
05/29/15 11:26:44	64094	0.01	32.65	545.59	16.97
05/29/15 11:27:14	64124	0.02	50.13	547.38	16.98
05/29/15 11:27:44	64154	0.02	205.50	688.25	16.92
05/29/15 11:28:14	64184	0.02	139.64	471.55	16.97
05/29/15 11:28:44	64214	0.02	51.53	573.67	14.82
05/29/15 11:29:14	64244	0.02	40.33	1,126.81	10.68
05/29/15 11:29:44	64274	0.01	51.39	1,078.16	10.72
05/29/15 11:30:14	64304	0.01	82.60	845.41	10.63
05/29/15 11:30:44	64334	0.02	95.58	458.00	10.39
05/29/15 11:31:14	64364	0.02	89.43	554.84	10.36
05/29/15 11:31:44	64394	0.02	116.64	794.66	10.61
05/29/15 11:32:14	64424	0.02	85.06	770.06	10.56
05/29/15 11:32:44	64454	0.02	148.88	801.88	9.81
05/29/15 11:33:14	64484	0.01	90.46	789.81	8.44
05/29/15 11:33:44	64514	0.01	83.04	870.58	8.54
05/29/15 11:34:14	64544	0.01	46.55	785.19	8.47
05/29/15 11:34:44	64574	0.01	29.37	1,055.91	8.32
05/29/15 11:35:14	64604	0.01	52.15	734.38	8.31
05/29/15 11:35:44	64634	0.01	44.86	241.22	8.48
05/29/15 11:36:14	64664	0.01	31.12	403.88	8.46
05/29/15 11:36:44	64694	0.01	41.59	383.59	10.38
05/29/15 11:37:14	64724	0.01	43.63	267.74	13.99
05/29/15 11:37:44	64754	0.01	123.76	642.84	14.03
05/29/15 11:38:14	64784	0.01	80.98	590.86	13.98
05/29/15 11:38:44	64814	0.01	30.67	370.96	13.70
05/29/15 11:39:14	64844	0.01	37.71	325.64	13.77
05/29/15 11:39:44	64874	0.01	109.18	275.96	14.10
05/29/15 11:40:14	64904	0.01	52.52	164.32	14.05

XTO Energy, Inc.
May 29, 2015
Caterpillar, G3306 TA, Unit #805709, Serial #R6S01337
McCarty 1-36H

Run - 1

Date/Time (mm/dd/yy hh:mm:ss)	Elapsed Time (seconds)	O_2 (%)	NOx (ppmvd)	CO (ppmvd)	VOC (ppmvw)
05/29/15 11:40:44	64934	0.01	48.17	258.51	12.99
05/29/15 11:41:14	64964	0.01	57.90	415.65	11.08
05/29/15 11:41:44	64994	0.01	49.59	314.84	10.99
05/29/15 11:42:14	65024	0.01	56.14	415.82	10.95
05/29/15 11:42:44	65054	0.01	48.80	296.01	10.96
05/29/15 11:43:14	65084	0.01	31.91	237.94	10.90
05/29/15 11:43:44	65114	0.01	33.70	243.96	10.85
05/29/15 11:44:14	65144	0.01	40.96	264.01	10.91
05/29/15 11:44:44	65174	0.01	51.23	181.45	10.51
05/29/15 11:45:14	65204	0.01	32.93	369.54	9.50
05/29/15 11:45:44	65234	0.01	16.83	570.13	9.43
05/29/15 11:46:14	65264	0.01	24.71	403.01	9.37
05/29/15 11:46:44	65294	0.01	40.40	232.35	9.31
05/29/15 11:47:14	65324	0.01	22.77	428.41	9.30
05/29/15 11:47:44	65354	0.01	78.70	409.29	9.53
05/29/15 11:48:14	65384	0.01	34.40	212.38	9.53
05/29/15 11:48:44	65414	0.01	24.94	606.44	9.25
05/29/15 11:49:14	65444	0.01	47.21	338.95	8.56
05/29/15 11:49:44	65474	0.01	53.98	243.54	8.57
05/29/15 11:50:14	65504	0.01	22.45	548.70	8.59
05/29/15 11:50:44	65534	0.01	38.79	305.25	8.33
05/29/15 11:51:14	65564	0.01	39.18	191.71	8.26
05/29/15 11:51:44	65594	0.01	66.57	200.95	8.32
05/29/15 11:52:14	65624	0.01	31.74	249.81	8.36
05/29/15 11:52:44	65654	0.01	31.93	224.64	9.04
05/29/15 11:53:14	65684	0.01	41.46	145.15	9.93
05/29/15 11:53:44	65714	0.01	16.00	265.68	9.81
05/29/15 11:54:14	65744	0.01	15.47	422.05	9.89
05/29/15 11:54:44	65774	0.01	26.76	321.27	10.07
05/29/15 11:55:14	65804	0.01	50.22	274.84	9.96
05/29/15 11:55:44	65834	0.01	32.22	130.95	9.84
05/29/15 11:56:14	65864	0.01	31.22	245.03	9.82
05/29/15 11:56:44	65894	0.01	39.90	323.47	10.01
05/29/15 11:57:14	65924	0.01	35.15	310.55	10.39
05/29/15 11:57:44	65954	0.00	34.69	247.11	10.50
05/29/15 11:58:14	65984	0.00	40.47	111.26	10.45
05/29/15 11:58:44	66014	0.01	40.42	219.87	10.56
05/29/15 11:59:14	66044	0.01	78.93	402.10	10.50
05/29/15 11:59:44	66074	0.00	82.77	387.56	10.23
05/29/15 12:00:14	66104	0.00	55.01	521.30	10.23
05/29/15 12:00:44	66134	0.00	27.99	209.21	10.36
05/29/15 12:01:14	66164	0.01	51.00	318.45	10.77
05/29/15 12:01:44	66194	0.01	63.42	304.95	11.08
05/29/15 12:02:14	66224	0.00	51.79	233.01	10.98
05/29/15 12:02:44	66254	0.01	19.47	233.44	10.83
05/29/15 12:03:14	66284	0.01	55.21	243.10	10.81
05/29/15 12:03:44	66314	0.00	47.03	328.16	11.00
05/29/15 12:04:14	66344	0.00	40.75	285.91	10.97
05/29/15 12:04:44	66374	0.00	27.79	197.53	10.78
05/29/15 12:05:14	66404	0.00	45.73	293.13	10.52
05/29/15 12:05:44	66434	0.00	97.25	174.45	10.50

XTO Energy, Inc.
May 29, 2015
Caterpillar, G3306 TA, Unit #805709, Serial #R6S01337
McCarty 1-36H

Run - 1

Date/Time (mm/dd/yy hh:mm:ss)	Elapsed Time (seconds)	O_2 (%)	NOx (ppmvd)	CO (ppmvd)	VOC (ppmvw)
05/29/15 12:06:14	66464	0.01	19.18	355.22	10.47
05/29/15 12:06:44	66494	0.00	50.43	469.73	10.28
05/29/15 12:07:14	66524	0.01	16.96	353.94	10.33
05/29/15 12:07:44	66554	0.00	16.91	247.22	10.50
05/29/15 12:08:14	66584	0.01	25.35	194.88	10.48
05/29/15 12:08:44	66614	0.00	31.66	78.94	11.14
05/29/15 12:09:14	66644	0.00	10.18	404.95	12.42
05/29/15 12:09:44	66674	0.00	23.89	552.67	12.25
05/29/15 12:10:14	66704	0.00	35.47	229.73	12.33
05/29/15 12:10:44	66734	0.00	50.02	221.45	12.76
05/29/15 12:11:14	66764	0.00	41.97	204.36	12.61
05/29/15 12:11:44	66794	0.00	27.74	361.97	12.34
05/29/15 12:12:14	66824	0.01	24.51	265.80	12.29
05/29/15 12:12:44	66854	0.00	38.96	236.18	11.90
05/29/15 12:13:14	66884	0.00	19.30	326.58	11.37
05/29/15 12:13:44	66914	0.00	21.99	591.89	11.38
05/29/15 12:14:14	66944	0.01	31.06	303.87	11.31
05/29/15 12:14:44	66974	0.00	43.87	123.92	11.30
RAW AVERAGE		**0.01**	**55.80**	**426.54**	**10.92**

		O_2	NOx	CO	VOC
	Serial Number:	INST-O2-0012	INST-NX-0012	INST-CO-0016	INST-VC-0002
		(%)	(ppmvd)	(ppmvd)	(ppmvw)
Bias	**Initial Zero**	0.04	0.17	0.25	0.00
	Final Zero	0.12	1.65	0.68	0.00
	Avg. Zero	0.08	0.91	0.47	0.00
	Initial UpScale	11.93	244.38	247.16	25.01
	Final UpScale	11.91	246.49	245.60	25.17
	Avg. UpScale	11.92	245.44	246.38	25.09
Upscale Cal Gas		11.92	251.00	251.00	24.95

EMISSIONS DATA	O_2	NOx	CO	VOC
Corrected Raw Average (ppm/% dry basis)	0.00	56.35	434.88	13.59
Corrected Raw Average (ppm/% wet basis)	0.00	44.84	347.41	10.86

XTO Energy, Inc.
May 29, 2015
Caterpillar, G3306 TA, Unit #805709, Serial #R6S01337
McCarty 1-36H

Run - 2

Date/Time (mm/dd/yy hh:mm:ss)	Elapsed Time (seconds)	O_2 (%)	NOx (ppmvd)	CO (ppmvd)	VOC (ppmvw)
05/29/15 12:25:14	67604	0.00	8.38	321.34	8.87
05/29/15 12:25:44	67634	0.00	19.00	278.02	8.84
05/29/15 12:26:14	67664	0.00	16.45	139.57	8.86
05/29/15 12:26:44	67694	0.00	9.71	206.48	8.90
05/29/15 12:27:14	67724	0.06	11.82	466.55	8.87
05/29/15 12:27:44	67754	0.08	21.47	200.20	8.75
05/29/15 12:28:14	67784	0.08	17.13	147.09	8.92
05/29/15 12:28:44	67814	0.08	19.99	133.27	10.11
05/29/15 12:29:14	67844	0.08	30.64	561.48	11.69
05/29/15 12:29:44	67874	0.08	13.38	251.95	11.22
05/29/15 12:30:14	67904	0.08	121.47	148.70	11.23
05/29/15 12:30:44	67934	0.08	17.04	167.31	11.52
05/29/15 12:31:14	67964	0.08	13.25	390.75	11.54
05/29/15 12:31:44	67994	0.08	14.80	285.09	11.30
05/29/15 12:32:14	68024	0.08	19.18	205.20	11.34
05/29/15 12:32:44	68054	0.08	35.22	144.35	10.72
05/29/15 12:33:14	68084	0.08	31.48	107.74	9.50
05/29/15 12:33:44	68114	0.08	17.41	199.48	9.47
05/29/15 12:34:14	68144	0.08	26.31	174.64	9.47
05/29/15 12:34:44	68174	0.08	42.14	245.04	9.53
05/29/15 12:35:14	68204	0.08	22.17	403.22	9.56
05/29/15 12:35:44	68234	0.08	28.83	302.12	9.65
05/29/15 12:36:14	68264	0.08	20.05	127.74	9.51
05/29/15 12:36:44	68294	0.08	36.57	340.47	9.71
05/29/15 12:37:14	68324	0.08	22.54	370.10	9.99
05/29/15 12:37:44	68354	0.08	24.37	792.98	10.03
05/29/15 12:38:14	68384	0.08	38.01	319.25	9.93
05/29/15 12:38:44	68414	0.08	11.29	346.90	9.81
05/29/15 12:39:14	68444	0.08	16.99	418.99	9.83
05/29/15 12:39:44	68474	0.08	14.91	300.90	9.99
05/29/15 12:40:14	68504	0.08	24.06	118.03	9.93
05/29/15 12:40:44	68534	0.08	15.88	275.23	9.72
05/29/15 12:41:14	68564	0.08	78.82	375.02	9.14
05/29/15 12:41:44	68594	0.08	44.76	435.13	9.12
05/29/15 12:42:14	68624	0.08	30.51	386.39	9.02
05/29/15 12:42:44	68654	0.08	17.86	325.46	8.93
05/29/15 12:43:14	68684	0.08	19.32	556.91	8.99
05/29/15 12:43:44	68714	0.08	16.05	672.09	9.07
05/29/15 12:44:14	68744	0.08	15.38	255.73	8.97
05/29/15 12:44:44	68774	0.08	20.44	231.80	9.00
05/29/15 12:45:14	68804	0.08	99.09	154.29	8.98
05/29/15 12:45:44	68834	0.08	33.52	205.23	8.93
05/29/15 12:46:14	68864	0.08	19.73	294.27	8.94
05/29/15 12:46:44	68894	0.08	15.55	290.52	8.82
05/29/15 12:47:14	68924	0.08	18.11	366.05	8.87
05/29/15 12:47:44	68954	0.08	20.02	315.66	8.85
05/29/15 12:48:14	68984	0.08	17.98	369.53	8.84
05/29/15 12:48:44	69014	0.08	35.01	353.51	9.40
05/29/15 12:49:14	69044	0.08	13.69	156.35	10.32
05/29/15 12:49:44	69074	0.08	34.95	330.04	10.42
05/29/15 12:50:14	69104	0.08	27.52	459.91	10.46

XTO Energy, Inc.
May 29, 2015
Caterpillar, G3306 TA, Unit #805709, Serial #R6S01337
McCarty 1-36H

Run - 2

Date/Time (mm/dd/yy hh:mm:ss)	Elapsed Time (seconds)	O_2 (%)	NOx (ppmvd)	CO (ppmvd)	VOC (ppmvw)
05/29/15 12:50:44	69134	0.07	40.72	371.09	10.45
05/29/15 12:51:14	69164	0.08	15.16	435.38	10.39
05/29/15 12:51:44	69194	0.08	15.52	273.20	10.20
05/29/15 12:52:14	69224	0.07	25.13	256.13	10.20
05/29/15 12:52:44	69254	0.08	25.75	420.19	9.51
05/29/15 12:53:14	69284	0.08	21.90	445.88	8.36
05/29/15 12:53:44	69314	0.08	18.99	432.16	8.52
05/29/15 12:54:14	69344	0.07	22.83	212.92	8.45
05/29/15 12:54:44	69374	0.07	9.96	167.09	8.46
05/29/15 12:55:14	69404	0.08	25.00	500.38	8.45
05/29/15 12:55:44	69434	0.08	68.66	283.02	8.36
05/29/15 12:56:14	69464	0.08	16.00	198.91	8.37
05/29/15 12:56:44	69494	0.07	19.39	328.45	8.81
05/29/15 12:57:14	69524	0.07	14.20	295.34	9.51
05/29/15 12:57:44	69554	0.08	55.80	124.83	9.47
05/29/15 12:58:14	69584	0.08	31.11	93.52	9.43
05/29/15 12:58:44	69614	0.08	10.64	262.84	9.29
05/29/15 12:59:14	69644	0.08	24.99	397.88	9.34
05/29/15 12:59:44	69674	0.07	20.95	300.59	9.44
05/29/15 13:00:14	69704	0.07	12.09	457.25	9.52
05/29/15 13:00:44	69734	0.08	18.73	227.20	9.67
05/29/15 13:01:14	69764	0.07	29.91	47.70	9.98
05/29/15 13:01:44	69794	0.08	17.08	411.45	9.94
05/29/15 13:02:14	69824	0.08	63.68	794.34	10.01
05/29/15 13:02:44	69854	0.07	39.11	247.52	9.75
05/29/15 13:03:14	69884	0.07	19.51	322.06	9.70
05/29/15 13:03:44	69914	0.07	51.32	273.36	9.75
05/29/15 13:04:14	69944	0.07	21.65	343.18	9.73
05/29/15 13:04:44	69974	0.08	33.60	267.55	9.26
05/29/15 13:05:14	70004	0.08	25.20	255.86	8.40
05/29/15 13:05:44	70034	0.08	21.82	187.34	8.59
05/29/15 13:06:14	70064	0.08	24.12	131.04	8.46
05/29/15 13:06:44	70094	0.08	15.58	325.20	8.28
05/29/15 13:07:14	70124	0.08	25.18	477.78	8.33
05/29/15 13:07:44	70154	0.08	85.53	269.65	8.44
05/29/15 13:08:14	70184	0.07	47.04	238.14	8.42
05/29/15 13:08:44	70214	0.08	10.26	422.26	10.16
05/29/15 13:09:14	70244	0.08	49.23	288.19	12.95
05/29/15 13:09:44	70274	0.08	43.07	154.75	13.04
05/29/15 13:10:14	70304	0.08	9.82	265.20	13.07
05/29/15 13:10:44	70334	0.08	29.09	459.70	13.00
05/29/15 13:11:14	70364	0.08	39.54	393.18	12.96
05/29/15 13:11:44	70394	0.08	23.71	225.89	12.80
05/29/15 13:12:14	70424	0.08	26.63	294.81	12.88
05/29/15 13:12:44	70454	0.08	65.67	246.22	11.89
05/29/15 13:13:14	70484	0.07	17.90	212.71	9.94
05/29/15 13:13:44	70514	0.08	18.65	263.38	9.73
05/29/15 13:14:14	70544	0.08	12.91	239.30	9.72
05/29/15 13:14:44	70574	0.08	22.17	505.32	9.80
05/29/15 13:15:14	70604	0.08	22.52	471.24	9.85
05/29/15 13:15:44	70634	0.08	44.40	181.50	10.04

XTO Energy, Inc.
May 29, 2015
Caterpillar, G3306 TA, Unit #805709, Serial #R6S01337
McCarty 1-36H

Run - 2

Date/Time (mm/dd/yy hh:mm:ss)	Elapsed Time (seconds)	O_2 (%)	NOx (ppmvd)	CO (ppmvd)	VOC (ppmvw)
05/29/15 13:16:14	70664	0.08	30.56	152.73	10.04
05/29/15 13:16:44	70694	0.08	23.68	338.13	9.74
05/29/15 13:17:14	70724	0.08	27.39	190.98	9.12
05/29/15 13:17:44	70754	0.08	12.97	284.11	8.84
05/29/15 13:18:14	70784	0.08	12.16	326.12	8.90
05/29/15 13:18:44	70814	0.08	16.04	326.01	8.97
05/29/15 13:19:14	70844	0.08	19.63	253.26	8.96
05/29/15 13:19:44	70874	0.08	11.94	310.51	8.91
05/29/15 13:20:14	70904	0.08	38.29	470.35	8.85
05/29/15 13:20:44	70934	0.08	45.09	210.18	8.86
05/29/15 13:21:14	70964	0.08	18.34	332.59	8.85
05/29/15 13:21:44	70994	0.08	55.24	463.02	9.04
05/29/15 13:22:14	71024	0.08	16.57	127.30	8.95
05/29/15 13:22:44	71054	0.08	12.58	230.02	9.10
05/29/15 13:23:14	71084	0.08	18.57	361.03	9.13
05/29/15 13:23:44	71114	0.07	28.74	279.89	8.99
05/29/15 13:24:14	71144	0.08	49.42	268.68	9.01
05/29/15 13:24:44	71174	0.08	140.31	166.52	9.25
RAW AVERAGE		**0.08**	**28.39**	**301.80**	**9.67**

		O_2	NOx	CO	VOC
	Serial Number:	INST-O2-0012	INST-NX-0012	INST-CO-0016	INST-VC-0002
		(%)	(ppmvd)	(ppmvd)	(ppmvw)
Bias	**Initial Zero**	0.04	0.17	0.25	0.00
	Final Zero	0.12	1.65	0.68	0.00
	Avg. Zero	0.08	0.91	0.47	0.00
	Initial UpScale	11.93	244.38	247.16	25.01
	Final UpScale	11.91	246.49	245.60	25.17
	Avg. UpScale	11.92	245.44	246.38	25.09
Upscale Cal Gas		11.92	251.00	251.00	24.95

EMISSIONS DATA	O_2	NOx	CO	VOC
Corrected Raw Average (ppm/% dry basis)	0.00	28.21	307.56	12.06
Corrected Raw Average (ppm/% wet basis)	0.00	22.31	245.14	9.61

XTO Energy, Inc.
May 29, 2015
Caterpillar, G3306 TA, Unit #805709, Serial #R6S01337
McCarty 1-36H

Run - 3

Date/Time (mm/dd/yy hh:mm:ss)	Elapsed Time (seconds)	O_2 (%)	NOx (ppmvd)	CO (ppmvd)	VOC (ppmvw)
05/29/15 13:26:14	71264	0.08	61.63	534.86	9.37
05/29/15 13:26:44	71294	0.08	19.75	218.45	9.78
05/29/15 13:27:14	71324	0.08	15.79	145.29	9.73
05/29/15 13:27:44	71354	0.08	14.08	126.57	9.59
05/29/15 13:28:14	71384	0.08	13.24	108.39	9.58
05/29/15 13:28:44	71414	0.08	26.63	163.91	9.14
05/29/15 13:29:14	71444	0.08	64.00	130.68	8.14
05/29/15 13:29:44	71474	0.08	16.77	130.03	7.98
05/29/15 13:30:14	71504	0.08	22.08	234.26	7.92
05/29/15 13:30:44	71534	0.07	66.75	126.45	7.89
05/29/15 13:31:14	71564	0.08	9.04	243.62	7.83
05/29/15 13:31:44	71594	0.08	52.71	438.38	7.81
05/29/15 13:32:14	71624	0.08	36.35	221.96	7.82
05/29/15 13:32:44	71654	0.08	24.88	424.72	7.92
05/29/15 13:33:14	71684	0.08	21.19	506.41	7.59
05/29/15 13:33:44	71714	0.08	17.89	459.27	7.45
05/29/15 13:34:14	71744	0.08	20.89	273.24	7.48
05/29/15 13:34:44	71774	0.08	30.28	132.24	7.56
05/29/15 13:35:14	71804	0.08	14.54	282.76	7.60
05/29/15 13:35:44	71834	0.08	18.66	393.79	7.50
05/29/15 13:36:14	71864	0.07	72.09	236.34	7.45
05/29/15 13:36:44	71894	0.08	19.48	221.87	7.93
05/29/15 13:37:14	71924	0.07	145.24	128.96	9.25
05/29/15 13:37:44	71954	0.07	19.89	106.95	9.44
05/29/15 13:38:14	71984	0.08	11.68	415.84	9.45
05/29/15 13:38:44	72014	0.08	24.18	367.84	9.29
05/29/15 13:39:14	72044	0.08	16.89	198.77	9.41
05/29/15 13:39:44	72074	0.08	22.13	137.04	9.73
05/29/15 13:40:14	72104	0.08	12.12	182.97	9.77
05/29/15 13:40:44	72134	0.08	17.21	197.26	9.37
05/29/15 13:41:14	72164	0.07	19.67	216.57	8.64
05/29/15 13:41:44	72194	0.07	14.65	281.64	8.44
05/29/15 13:42:14	72224	0.07	32.28	143.94	8.51
05/29/15 13:42:44	72254	0.07	15.56	196.54	8.69
05/29/15 13:43:14	72284	0.07	25.53	172.55	8.64
05/29/15 13:43:44	72314	0.08	12.83	180.53	8.55
05/29/15 13:44:14	72344	0.08	104.44	374.38	8.56
05/29/15 13:44:44	72374	0.08	20.48	274.84	8.38
05/29/15 13:45:14	72404	0.08	13.71	236.95	8.39
05/29/15 13:45:44	72434	0.08	20.78	183.63	8.44
05/29/15 13:46:14	72464	0.08	30.16	206.20	8.44
05/29/15 13:46:44	72494	0.08	14.11	222.46	8.42
05/29/15 13:47:14	72524	0.08	36.62	308.77	8.42
05/29/15 13:47:44	72554	0.07	66.45	177.38	8.25
05/29/15 13:48:14	72584	0.08	21.93	175.36	8.26
05/29/15 13:48:44	72614	0.08	72.91	111.28	8.87
05/29/15 13:49:14	72644	0.08	14.18	112.86	9.85
05/29/15 13:49:44	72674	0.08	10.45	595.47	10.03
05/29/15 13:50:14	72704	0.07	29.25	288.21	9.93
05/29/15 13:50:44	72734	0.08	9.95	262.77	9.73
05/29/15 13:51:14	72764	0.08	36.42	549.80	9.84

XTO Energy, Inc.
May 29, 2015
Caterpillar, G3306 TA, Unit #805709, Serial #R6S01337
McCarty 1-36H

Run - 3

Date/Time (mm/dd/yy hh:mm:ss)	Elapsed Time (seconds)	O_2 (%)	NOx (ppmvd)	CO (ppmvd)	VOC (ppmvw)
05/29/15 13:51:44	72794	0.08	45.76	219.71	9.84
05/29/15 13:52:14	72824	0.08	12.06	177.34	9.84
05/29/15 13:52:44	72854	0.08	24.73	97.27	10.15
05/29/15 13:53:14	72884	0.07	13.48	216.68	10.38
05/29/15 13:53:44	72914	0.08	25.43	414.70	10.29
05/29/15 13:54:14	72944	0.08	18.39	478.77	10.31
05/29/15 13:54:44	72974	0.08	29.34	426.44	10.32
05/29/15 13:55:14	73004	0.08	18.96	409.66	10.32
05/29/15 13:55:44	73034	0.08	16.27	503.70	10.50
05/29/15 13:56:14	73064	0.08	30.74	264.30	10.46
05/29/15 13:56:44	73094	0.08	45.82	173.76	9.76
05/29/15 13:57:14	73124	0.08	31.56	294.59	8.81
05/29/15 13:57:44	73154	0.08	33.54	237.10	8.77
05/29/15 13:58:14	73184	0.08	17.95	206.74	8.80
05/29/15 13:58:44	73214	0.08	13.41	253.18	8.70
05/29/15 13:59:14	73244	0.08	15.00	616.42	8.76
05/29/15 13:59:44	73274	0.08	32.99	421.71	9.01
05/29/15 14:00:14	73304	0.08	22.37	396.58	9.02
05/29/15 14:00:44	73334	0.10	25.09	343.41	8.41
05/29/15 14:01:14	73364	0.09	27.57	405.97	7.48
05/29/15 14:01:44	73394	0.08	39.36	216.27	7.39
05/29/15 14:02:14	73424	0.08	13.92	392.96	7.35
05/29/15 14:02:44	73454	0.09	10.46	434.57	7.33
05/29/15 14:03:14	73484	0.08	44.91	458.07	7.33
05/29/15 14:03:44	73514	0.08	29.18	214.67	7.46
05/29/15 14:04:14	73544	0.09	22.03	157.05	7.48
05/29/15 14:04:44	73574	0.08	38.96	157.37	8.92
05/29/15 14:05:14	73604	0.08	27.98	206.03	11.49
05/29/15 14:05:44	73634	0.09	20.05	484.90	11.48
05/29/15 14:06:14	73664	0.07	30.04	295.75	11.40
05/29/15 14:06:44	73694	0.08	15.34	190.67	11.19
05/29/15 14:07:14	73724	0.08	22.77	527.08	11.38
05/29/15 14:07:44	73754	0.08	18.97	289.19	11.73
05/29/15 14:08:14	73784	0.08	19.37	244.66	11.62
05/29/15 14:08:44	73814	0.08	32.52	114.07	10.31
05/29/15 14:09:14	73844	0.08	14.66	427.63	8.46
05/29/15 14:09:44	73874	0.08	22.23	239.93	8.20
05/29/15 14:10:14	73904	0.07	19.89	284.71	8.28
05/29/15 14:10:44	73934	0.08	13.83	506.63	8.53
05/29/15 14:11:14	73964	0.08	16.64	350.63	8.53
05/29/15 14:11:44	73994	0.07	25.46	180.42	8.41
05/29/15 14:12:14	74024	0.07	18.05	194.91	8.48
05/29/15 14:12:44	74054	0.08	48.65	193.76	8.36
05/29/15 14:13:14	74084	0.08	35.35	144.50	7.69
05/29/15 14:13:44	74114	0.07	26.35	189.08	7.44
05/29/15 14:14:14	74144	0.07	20.58	218.68	7.46
05/29/15 14:14:44	74174	0.08	14.33	113.10	7.54
05/29/15 14:15:14	74204	0.08	16.47	264.59	7.53
05/29/15 14:15:44	74234	0.08	41.00	245.45	7.50
05/29/15 14:16:14	74264	0.08	31.16	237.87	7.45
05/29/15 14:16:44	74294	0.08	13.66	310.44	7.59

XTO Energy, Inc.
May 29, 2015
Caterpillar, G3306 TA, Unit #805709, Serial #R6S01337
McCarty 1-36H

Run - 3

Date/Time (mm/dd/yy hh:mm:ss)	Elapsed Time (seconds)	O_2 (%)	NOx (ppmvd)	CO (ppmvd)	VOC (ppmvw)
05/29/15 14:17:14	74324	0.08	82.51	173.60	7.43
05/29/15 14:17:44	74354	0.08	19.72	190.09	7.25
05/29/15 14:18:14	74384	0.08	95.76	235.89	7.30
05/29/15 14:18:44	74414	0.08	19.16	130.86	7.25
05/29/15 14:19:14	74444	0.08	8.90	195.62	7.35
05/29/15 14:19:44	74474	0.08	12.02	151.52	7.46
05/29/15 14:20:14	74504	0.08	19.11	371.19	7.52
05/29/15 14:20:44	74534	0.08	57.59	431.77	7.41
05/29/15 14:21:14	74564	0.08	17.34	314.97	7.06
05/29/15 14:21:44	74594	0.08	70.32	157.23	7.06
05/29/15 14:22:14	74624	0.08	24.12	138.27	6.95
05/29/15 14:22:44	74654	0.08	10.18	366.05	6.71
05/29/15 14:23:14	74684	0.08	14.99	186.22	6.74
05/29/15 14:23:44	74714	0.08	22.80	147.13	6.99
05/29/15 14:24:14	74744	0.08	12.55	144.24	6.93
05/29/15 14:24:44	74774	0.08	21.68	451.79	7.22
05/29/15 14:25:14	74804	0.08	18.37	437.77	7.81
05/29/15 14:25:44	74834	0.08	28.23	265.48	7.91
RAW AVERAGE		**0.08**	**28.09**	**269.12**	**8.61**

		O_2	NOx	CO	VOC
	Serial Number:	INST-O2-0012	INST-NX-0012	INST-CO-0016	INST-VC-0002
		(%)	(ppmvd)	(ppmvd)	(ppmvw)
Bias	**Initial Zero**	0.04	0.17	0.25	0.00
	Final Zero	0.12	1.65	0.68	0.00
	Avg. Zero	0.08	0.91	0.47	0.00
	Initial UpScale	11.93	244.38	247.16	25.01
	Final UpScale	11.91	246.49	245.60	25.17
	Avg. UpScale	11.92	245.44	246.38	25.09
Upscale Cal Gas		11.92	251.00	251.00	24.95

EMISSIONS DATA	O_2	NOx	CO	VOC
Corrected Raw Average (ppm/% dry basis)	0.00	27.90	274.21	10.74
Corrected Raw Average (ppm/% wet basis)	0.00	22.05	218.55	8.57

G3306 TA

GAS COMPRESSION APPLICATION

GAS ENGINE SITE SPECIFIC TECHNICAL DATA

CATERPILLAR®

ENGINE SPEED (rpm):	1800
COMPRESSION RATIO:	8.0:1
AFTERCOOLER WATER INLET (°F):	130
JACKET WATER OUTLET (°F):	210
COOLING SYSTEM:	JW+OC , AC
IGNITION SYSTEM:	MAG
EXHAUST MANIFOLD:	WC
COMBUSTION:	Catalyst
EXHAUST O2 EMISSION LEVEL %:	0.5
SET POINT TIMING:	35.0

FUEL SYSTEM:	HPG IMPCO
	WITH CUSTOMER SUPPLIED AIR FUEL RATIO CONTROL
SITE CONDITIONS:	
FUEL:	Nat Gas
FUEL PRESSURE RANGE(psig):	12.0-24.9
FUEL METHANE NUMBER:	84.8
FUEL LHV (Btu/scf):	905
ALTITUDE(ft):	500
MAXIMUM INLET AIR TEMPERATURE(°F):	77
NAMEPLATE RATING:	203 bhp@1800rpm

			MAXIMUM RATING	SITE RATING AT MAXIMUM INLET AIR TEMPERATURE		
RATING	**NOTES**	**LOAD**	**100%**	**100%**	**75%**	**50%**
ENGINE POWER	(1)	bhp	203	203	152	101
INLET AIR TEMPERATURE		°F	77	77	77	77
ENGINE DATA						
FUEL CONSUMPTION (LHV)	(2)	Btu/bhp-hr	8098	8098	8442	9195
FUEL CONSUMPTION (HHV)	(2)	Btu/bhp-hr	8983	8983	9364	10199
AIR FLOW	(3)(4)	lb/hr	1351	1351	1080	788
AIR FLOW WET (77°F, 14.7 psia)	(3)(4)	scfm	305	305	243	178
INLET MANIFOLD PRESSURE	(5)	in Hg(abs)	38.5	38.5	32.3	24.9
EXHAUST STACK TEMPERATURE	(6)	°F	1064	1064	1030	988
EXHAUST GAS FLOW (@ stack temp, 14.5 psia)	(7)(4)	ft3/min	970	970	756	536
EXHAUST GAS MASS FLOW	(7)(4)	lb/hr	1434	1434	1144	835
EMISSIONS DATA						
NOx (as NO2)	(8)	g/bhp-hr	16.57	16.57	16.27	13.78
CO	(8)	g/bhp-hr	16.57	16.57	16.27	13.78
THC (mol. wt. of 15.84)	(8)	g/bhp-hr	1.20	1.20	1.39	1.67
NMHC (mol. wt. of 15.84)	(8)	g/bhp-hr	0.18	0.18	0.21	0.25
NMNEHC (VOCs) (mol. wt. of 15.84)	(8)(9)	g/bhp-hr	0.12	0.12	0.14	0.17
HCHO (Formaldehyde)	(8)	g/bhp-hr	0.25	0.25	0.25	0.25
CO2	(8)	g/bhp-hr	511	511	548	607
EXHAUST OXYGEN	(10)	% DRY	0.5	0.5	0.5	0.5
HEAT REJECTION						
HEAT REJ. TO JACKET WATER (JW)	(11)	Btu/min	9045	9045	7545	6039
HEAT REJ. TO ATMOSPHERE	(11)	Btu/min	1095	1095	856	622
HEAT REJ. TO LUBE OIL (OC)	(11)	Btu/min	1430	1430	1193	955
HEAT REJ. TO AFTERCOOLER (AC)	(11)(12)	Btu/min	515	515	209	31

HEAT EXCHANGER SIZING CRITERIA			
TOTAL JACKET WATER CIRCUIT (JW+OC)	(12)	Btu/min	11666
TOTAL AFTERCOOLER CIRCUIT (AC)	(12)(13)	Btu/min	540
A cooling system safety factor of 0% has been added to the heat exchanger sizing criteria.			

CONDITIONS AND DEFINITIONS

Engine rating obtained and presented in accordance with ISO 3046/1, adjusted for fuel, site altitude and site inlet air temperature.
100% rating at maximum inlet air temperature is the maximum engine capability for the specified fuel at site altitude and maximum site inlet air temperature.
Max. rating is the maximum capability for the specified fuel at site altitude and reduced inlet air temperature.
Lowest load point is the lowest continuous duty operating load allowed. No overload permitted at rating shown.

For notes information consult page three.

PREPARED BY:
Data generated by Gas Engine Rating Pro Version 3.02.00
Ref. Data Set DM5202-03-001, Printed 13Feb2009

Engine Power vs. Inlet Air Temperature

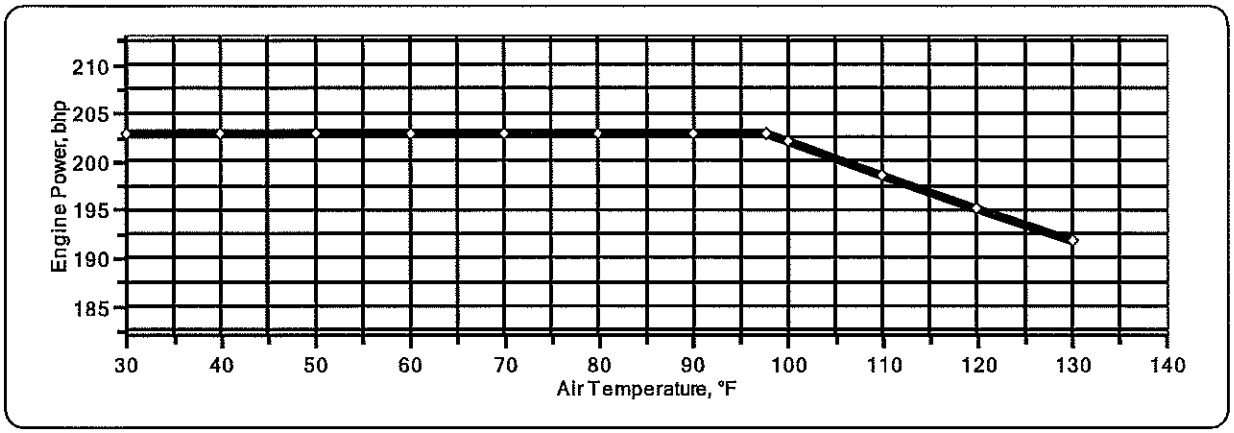

Engine Power vs. Engine Speed

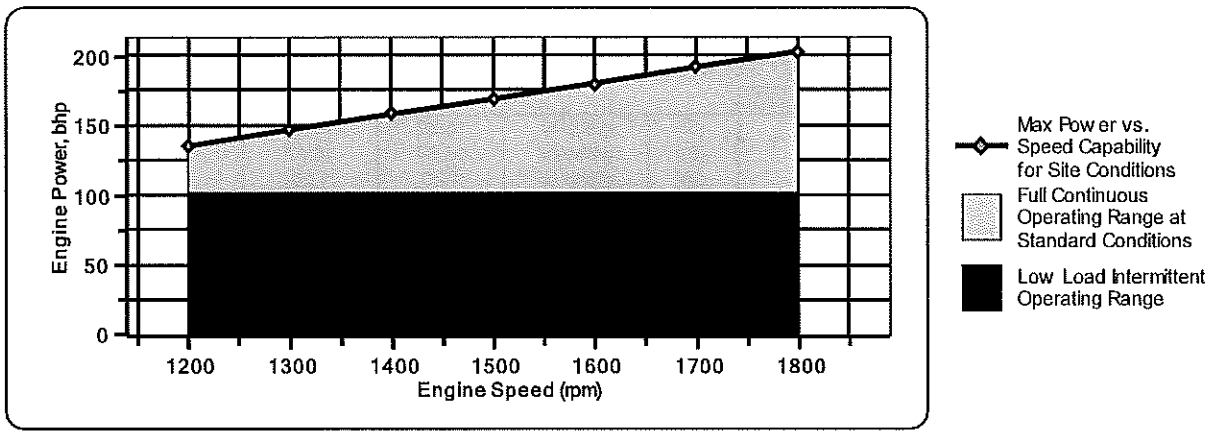

Engine Torque vs. Engine Speed

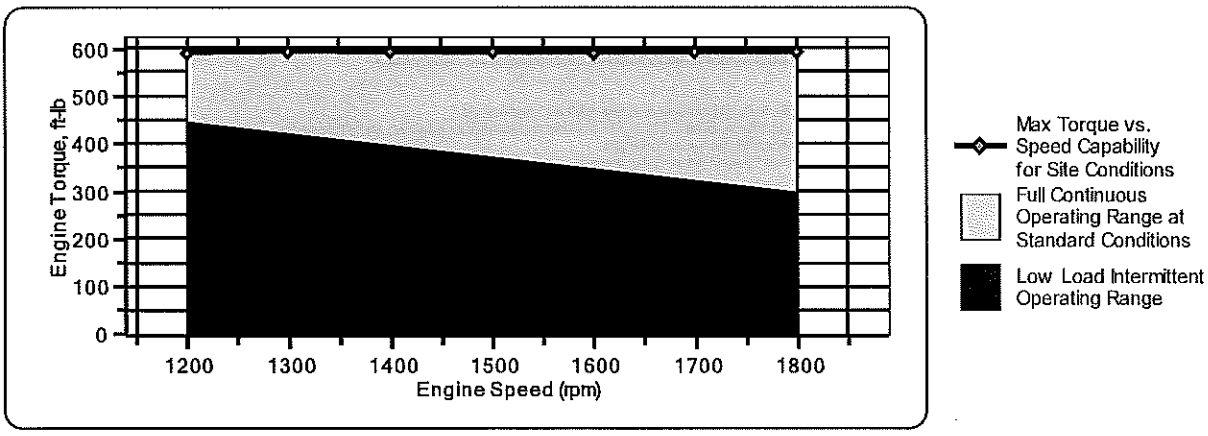

Note: At site conditions of 500 ft and 77°F inlet air temp., constant torque can be maintained down to 1200 rpm.

APPENDIX C

CALIBRATION GAS CERTIFICATIONS

RED BALL
TECHNICAL GAS SERVICES

Assay Laboratory: Red Ball TGS
555 Craig Kennedy Way
Shreveport, LA 71107
800-551-8150

CERTIFICATE OF ANALYSIS
(Zero Ambient Nitrogen)

Cylinder Number:	EB0046440	Certification Date:	02/13/2015
Product ID Number:	121026	Expiration Date:	02/11/2023
Cylinder Pressure:	1900 PSIG	MFG Facility:	RBTGS-Shreveport-LA
COA #	EB0046440.20150213-0	Lot Number:	EB0046440.20150213
Customer PO. NO.:		Tracking Number:	065271661
Customer:		Previous Certification Dates:	

This mixture is for laboratory use only, not for drug, household or other use.
This mixture is certified in Mole % to be within ±2% of the actual number reported with a confidence of 95%.
This mixture was manufactured by scale; weights traceable to N.I.S.T. Certificate #822/266926-02.
Do Not Use This Cylinder Below 100 psig (0.7 Megapascal).

Composing Material: Zero Ambient Nitrogen, Cert., Sz152

Component	Specification	Concentration
Nitrogen	Balance	Balance
Oxygen as Impurity	<1.0 PPM	<1.0 PPM
Carbon Dioxide as Impurity	<0.5 PPM	<0.5 PPM
Carbon Monoxide as Impurity	<0.5 PPM	<0.5 PPM
Total Oxides of Nitrogen as Impurity	<0.1 PPM	<0.1 PPM
Sulfur Dioxide as Impurity	<0.1 PPM	<0.1 PPM
Total Hydrocarbons as Impurity	<0.1 PPM	<0.1 PPM

Red Ball Technical Gas Service
PGVP Vendor ID # G12015
Information and Ordering
800-551-8150
Fax (318-425-6309)

LaMeka Dennis
Analytical Chemist

AIR LIQUIDE | Air Liquide America Specialty Gases LLC | Scott

RATA CLASS

Guaranteed +/- 1% Accuracy

1290 COMBERMERE STREET, TROY, MI 48083 Phone: 248-589-2950 Fax: 248-589-2134

CERTIFICATE OF ACCURACY: EPA Protocol Gas

Assay Laboratory - PGVP Vendor ID: A22013
AIR LIQUIDE AMERICA SPECIALTY GASES LLC
1290 COMBERMERE STREET
TROY, MI 48083

P.O. No.:
Document # : 52580535-003
Folio #:AH067

Customer
AIR HYGIENE
MIKE SCOTT
1600 WEST TACOMA ST
BROKEN ARROW OK 74012
US

ANALYTICAL INFORMATION Gas Type : CO,NO,BALN

This certification was performed according to EPA Traceability Protocol For Assay & Certification of Gaseous Calibration Standards; Procedure G-1, EPA/600/R-12/531; May 2012. Do not use this standard if pressure is less than 100 psig.

Cylinder Number: ALM051379 Certification Date: 28Oct2013 Exp. Date: 29Oct2021
Cylinder Pressure: 2015 PSIG Batch No: TRC0095146

COMPONENT	CERTIFIED CONCENTRATION (Moles)		ACCURACY (ABSOLUTE / RELATIVE)			
CARBON MONOXIDE	251	PPM	2.	PPM	/ 0.7	%
NITRIC OXIDE	251	PPM	2.	PPM	/ 0.6	%
NITROGEN - OXYGEN FREE		BALANCE				
TOTAL OXIDES OF NITROGEN	251.	PPM	Reference Value Only			

TRACEABILITY

REFERENCE STANDARD

COMPONENT	CONCENTRATION		UNCERTAINTY		CYLINDER	TYPE/SRM SAMPLE	EXP. DATE
CARBON MONOXIDE	970.0000	PPM	3.5000	PPM	KAL004592	NTRM 1681	16Jun2015
NITRIC OXIDE	242.0000	PPM	1.3000	PPM	KAL004362	NTRM 1685	04Jan2018

ANALYTICAL METHOD

1st Analysis: 21Oct2013

COMPONENT	INSTRUMENT	ANALYTICAL/PRINCIPLE	CALIBRATED	CONCENTRATION
CARBON MONOXIDE	MKS/2030/0928621	FOURIER-TRANSFORM IR	23Oct2013	251.0 PPM
NITRIC OXIDE	MKS/2030/0928621	FOURIER-TRANSFORM IR	17Oct2013	251.0 PPM

2nd Analysis: 28Oct2013

COMPONENT	INSTRUMENT	ANALYTICAL/PRINCIPLE	CALIBRATED	CONCENTRATION
NITRIC OXIDE	MKS/2030/0928621	FOURIER-TRANSFORM IR	17Oct2013	251.0 PPM

Special Notes: AH067 LIST ITEM AH067 ON CERTS AND TAGS

APPROVED BY: ROBERT MCCRANDALL

Page 1 of 1

RED BALL
TECHNICAL GAS SERVICES

Assay Laboratory: Red Ball TGS
555 Craig Kennedy Way
Shreveport, LA 71107
800-551-8150

EPA PROTOCOL GAS CERTIFICATE OF ANALYSIS

Cylinder Number:	EB0003607	Certification Date:	05/14/2014
Product ID Number:	125300	Expiration Date:	05/12/2022
Cylinder Pressure:	1900 PSIG	MFG Facility:	RBTGS-Shreveport-LA
COA #	EB0003607.20140502-0	Lot Number:	EB0003607.20140502
Customer PO. NO.:		Tracking Number:	6041090
Customer:		Previous Certification Dates:	

This calibration standard has been certified per the May 2012 EPA Traceability Protocol, Document EPA-600/R-12/531, using procedure G1.

Do Not Use This Cylinder Below 100 psig (0.7 Megapascal).

Certified Concentration(s)

Component	Concentration	Uncertainty	Analytical Principle
Carbon Monoxide	485 PPM	±1.3 PPM	GCF
Nitric Oxide	478.7 PPM	±0.7 PPM	NDIR
Total Oxides of Nitrogen	482.7 PPM		
Nitrogen	Balance		

Analytical Measurement Data Available Online.

Reference Standard(s)

Lot	Expiration	Type	Balance	Component	Concentration	Uncertainty(%)	NIST Reference
LD131016.152043.1G	11/30/2021	GMIS	N2	NO	639.9 PPM	0.433	2630
021003	11/05/2017	NTRM	N2	CO	988 PPM	0.6109	021003
LD131016.152043.2G	11/30/2021	GMIS	N2	NO	649.2 PPM	0.455	2630

Analytical Instrumentation

Component	Analytical Principle	Make	Model	Serial	MPC Date
CO	GCF	Thermo	T40C	0414030441	5/6/2014 11:53:42 AM
NO	NDIR	Horiba	VIA-510 NO	FC131303	4/15/2014 12:46:05 PM
NO	NDIR	Horiba	VIA-510 NO	FC131303	5/14/2014 7:50:56 AM

Red Ball Technical Gas Service
PGVP Vendor ID # G12014
Information and Ordering
800-551-8150
Fax (318-425-0309)

LaMeka Dennis
Analytical Chemist

RED BALL
TECHNICAL GAS SERVICES

Assay Laboratory: Red Ball TGS
555 Craig Kennedy Way
Shreveport, LA 71107
800-551-8160

EPA PROTOCOL GAS CERTIFICATE OF ANALYSIS

Cylinder Number:	EB0057381	Certification Date:	01/16/2015
Product ID Number:	124606	Expiration Date:	01/14/2023
Cylinder Pressure:	1900 PSIG	MFG Facility:	RBTGS-Shreveport-LA
COA #	EB0057381.20150112-0	Lot Number:	EB0057381.20150112
Customer PO. NO.:		Tracking Number:	074329456
Customer:		Previous Certification Dates:	

This calibration standard has been certified per the May 2012 EPA Traceability Protocol, Document EPA-600/R-12/531, using procedure G1.

Do Not Use This Cylinder Below 100 psig (0.7 Megapascal).

Certified Concentration(s)

Component	Concentration	Uncertainty	Analytical Principle
Carbon Dioxide	9.13 %	±0.04 %	FTIR
Oxygen	11.92 %	±0.02 %	MPA
Nitrogen	Balance		

Analytical Measurement Data Available Online.

Reference Standard(s)

Lot	Expiration	Type	Balance	Component	Concentration	Uncertainty(%)	NIST Reference
EB0055114.20140328.1E	10/07/2022	GMIS	N2	O2	23.8 %	0.605	071001
GC1108380818	05/04/2021	GMIS	N2	CO2	15.07 %	0.547	3221755.02
LD131022.115909.1G	10/07/2022	GMIS	N2	O2	11.97 %	0.527	071001
SG-9916936	01/15/2016	NTRM	N2	CO2	19.93 %	0.0014	101001

Analytical Instrumentation

Component	Analytical Principle	Make	Model	Serial	MPC Date
O2	MPA	Horiba	VA-3013	H0003P11	1/13/2015 8:19:04 AM
CO2	FTIR	MKS	MKS 2031DJG2EKVS13T	01714[illegible]	12/22/2014 9:23:30 PM

Red Ball Technical Gas Service
PGVP Vendor ID # G12015
Information and Ordering
800-551-8160
Fax (318-426-6309)

LaMeka Dennis
Analytical Chemist

Air Liquide America Specialty Gases LLC

SCOTT

RATA CLASS

Guaranteed +/- 1% Accuracy

1290 COMBERMERE STREET, TROY, MI 48083 Phone: 248-589-2950 Fax: 248-589-2134

CERTIFICATE OF ACCURACY: EPA Protocol Gas

Assay Laboratory - PGVP Vendor ID: A22013
AIR LIQUIDE AMERICA SPECIALTY GASES LLC
1290 COMBERMERE STREET
TROY, MI 48083

P.O. No.:
Document # : 52235725-002
Folio #:AH095

Customer
AIR HYGIENE
MIKE SCOTT
1600 WEST TACOMA ST
BROKEN ARROW OK 74012
US

ANALYTICAL INFORMATION Gas Type : CO2,O2,BALN

This certification was performed according to EPA Traceability Protocol For Assay & Certification of Gaseous Calibration Standards; Procedure G-1, EPA/600/R-12/531; May 2012. Do not use this standard if pressure is less than 100 psig.

Cylinder Number: ALM038933
Cylinder Pressure: 2000 PSIG
Certification Date: 30Sep2013
Exp. Date: 01Oct2021
Batch No: TR00093577

COMPONENT	CERTIFIED CONCENTRATION (Moles)	ACCURACY (ABSOLUTE / RELATIVE)
OXYGEN	21.1 %	0.08 % / 0.4 %
CARBON DIOXIDE	18.5 %	0.2 % / 0.8 %
NITROGEN	BALANCE	

TRACEABILITY

REFERENCE STANDARD COMPONENT	CONCENTRATION	UNCERTAINTY	CYLINDER	TYPE/SRM SAMPLE	EXP. DATE
OXYGEN	23.2000 %	0.0900 %	K024582	NTRM 2350	04Jan2018
CARBON DIOXIDE	23.0400 %	0.1200 %	K028052	NTRM 2300	17Aug2016

ANALYTICAL METHOD

1st Analysis: 30Sep2013

COMPONENT	INSTRUMENT	ANALYTICAL PRINCIPLE	CALIBRATED	CONCENTRATION
OXYGEN	CAI/110P/V03016	PARAMAGNETIC	30Sep2013	21.10 %
CARBON DIOXIDE	FIR/2000/S08015	NDIR	09Sep2013	18.50 %

Special Notes: AH095 LIST ITEM AH095 ON CERTS AND TAGS

APPROVED BY: _____
JEFF CROTEAU

THE LINDE GROUP

CERTIFICATE OF ANALYSIS

EPA PROTOCOL MIXTURE

PROCEDURE # : G1

PGVP ID#:	112013	GAS CODE:	APPVD
CUSTOMER:	Linde North America	CYLINDER # :	EB-0049752
SALES#:	501242646	CYLINDER PRES:	2000 PSIG
PROD#:	1264162	CYLINDER VALVE:	CGA 350
P.O.# :	TO#4501242646	CYLINDER SIZE:	2A
MATERIAL#:	24091360	CYLINDER MATERIAL:	Aluminum
CERTIFICATION DATE:	26-Jul-2013	GAS VOLUME:	4000 Liter
EXPIRATION DATE:	27-Jul-2021	BLEND TOLERANCE:	5% Relative
		PAGE:	1 of 1

CERTIFICATION HISTORY

COMPONENT	DATE OF ASSAY	MEAN CONCENTRATION	CERTIFIED CONCENTRATION	UNCERTAINTY AT 95% CONFIDENCE
Propane	26-Jul-2013	24.95 ppm	24.95 ppm	± 0.38 ppm

BALANCE Nitrogen

PREVIOUS CERTIFICATION DATES: None

REFERENCE STANDARDS

COMPONENT	SRM/NTRM#	CYLINDER#	CONCENTRATION	EXPIRATION DATE
Propane	GMIS-234866 SRM 1666b	cc-83859 clm-000391	100.50 ± 0.98 ppm 95.00 ± 0.90 ppm	04-Apr-2014 24-May-2013

INSTRUMENTATION

COMPONENT	MAKE/MODEL	SERIAL #	DETECTOR	CALIBRATION DATE(S)
Propane	H. Packard 6890	US00001434	GC - FID	26-Jul-2013

THIS STANDARD IS NIST TRACEABLE. IT WAS CERTIFIED ACCORDING TO THE 2012 EPA PROTOCOL PROCEDURES. DO NOT USE THIS STANDARD IF THE CYLINDER PRESSURE IS LESS THAN 100 PSIG.

ANALYST: MATTHEW JACKSON

Linde Gas North America LLC

DATE: 26-Jul-2013

(908) 329-9700 Main (908) 329-9740 Fax
www.Lindeus.com

AIR LIQUIDE | Air Liquide America Specialty Gases LLC | Scott

RATA CLASS

Dual-Analyzed Calibration Standard

1290 COMBERMERE STREET, TROY, MI 48083 Phone: 248-589-2950 Fax: 248-589-2134

CERTIFICATE OF ACCURACY: EPA Protocol Gas

Assay Laboratory - PGVP Vendor ID: A22011

AIR LIQUIDE AMERICA SPECIALTY GASES LLC
1290 COMBERMERE STREET
TROY, MI 48083

P.O. No.: 11111310
Document # : 44427303-002

Customer
AIR HYGIENE

MIKE SCOTT
1600 WEST TACOMA ST
BROKEN ARROW OK 74012
US

ANALYTICAL INFORMATION Gas Type : NONE

This certification was performed according to EPA Traceability Protocol For Assay & Certification of Gaseous Calibration Standards; Procedure G-1; September, 1997.

Cylinder Number: CC115743 **Certification Date:** 21Dec2011 **Exp. Date:** 22Dec2019
Cylinder Pressure*:** 1950 PSIG **Batch No:** TRO0048599

COMPONENT	CERTIFIED CONCENTRATION (Moles)		ACCURACY**	TRACEABILITY
PROPANE	45.1	PPM	+/- 1%	Direct NIST and VSL
NITROGEN		BALANCE		

*** Do not use when cylinder pressure is below 150 psig.
** Analytical accuracy is based on the requirements of EPA Protocol Procedure G1, September 1997.

REFERENCE STANDARD

TYPE/SRM NO.	EXPIRATION DATE	CYLINDER NUMBER	CONCENTRATION	COMPONENT
NTRM 1668	02Oct2013	ALM002439	99.50 PPM	PROPANE

INSTRUMENTATION

INSTRUMENT/MODEL/SERIAL#	DATE LAST CALIBRATED	ANALYTICAL PRINCIPLE
VARIAN/3400/7508	02Dec2011	TCD/FID

ANALYZER READINGS

(Z=Zero Gas R=Reference Gas T=Test Gas r=Correlation Coefficient)

First Triad Analysis	Second Triad Analysis	Calibration Curve
PROPANE		
Date: 21Dec2011 Response Unit: AREA		Concentration=A+Bx+Cx2+Dx3+Ex4
Z1=0.00000 R1=2626816. T1=1192391.		r=0.9999998
R2=2627886. Z2=0.00000 T2=1192014.		Constants: A=0.00681947
Z3=0.00000 T3=1191188. R3=2628950.		B=3.80834E-05 C=0
Avg. Concentration: 45.10 PPM		D=0 E=0

Special Notes: The expiration date has been extended without re-assay per EPA 600/R23-23/542.
AIR HYGIENE ITEM # AH051

APPROVED BY: Sarah Herbert
SARAH HERBERT

Page 1 of 1

AIR LIQUIDE | Air Liquide America Specialty Gases LLC | Scott

RATA CLASS

Guaranteed +/- 1% Accuracy

1290 COMBERMERE STREET, TROY, MI 48083 Phone: 248-689-2950 Fax: 248-689-2134

CERTIFICATE OF ACCURACY: EPA Protocol Gas

Assay Laboratory - PGVP Vendor ID: A22013
AIR LIQUIDE AMERICA SPECIALTY GASES LLC
1290 COMBERMERE STREET
TROY, MI 48083

P.O. No.:
Document # : 52995339-003
Folio #:AH052

Customer
AIR HYGIENE
MIKE SCOTT
1800 WEST TACOMA ST
BROKEN ARROW OK 74012
US

ANALYTICAL INFORMATION Gas Type : PPN,BALN

This certification was performed according to EPA Traceability Protocol For Assay & Certification of Gaseous Calibration Standards; Procedure G-1, EPA/600/R-12/631; May 2012. Do not use this standard if pressure is less than 100 psig.

Cylinder Number:	ALM005423	Certification Date:	22Nov2013	Exp. Date:	23Nov2021
Cylinder Pressure:	1950 PSIG			Batch No:	TRO0097716

COMPONENT	CERTIFIED CONCENTRATION (Moles)		ACCURACY (ABSOLUTE / RELATIVE)			
PROPANE	85.5	PPM	0.6	PPM	/	0.7 %
NITROGEN		BALANCE				

TRACEABILITY

REFERENCE STANDARD

COMPONENT	CONCENTRATION		UNCERTAINTY		CYLINDER	TYPE/SRM SAMPLE	EXP. DATE
PROPANE	98.3000	PPM	0.6000	PPM	ALM038653	NTRM 1668	12Jul2018

ANALYTICAL METHOD

1st Analysis: 22Nov2013

COMPONENT	INSTRUMENT	ANALYTICAL/PRINCIPLE	CALIBRATED	CONCENTRATION
PROPANE	VARIAN/3400/7506	TCD/FID	12Nov2013	85.50 PPM

Special Notes: ITEM AH052

APPROVED BY: ROBERT LESNIAK

RED BALL
TECHNICAL GAS SERVICES

Assay Laboratory: Red Ball TGS
555 Craig Kennedy Way
Shreveport, LA 71107
800-551-8150

CERTIFICATE OF ANALYSIS
EPA PROTOCOL GAS

Cylinder Number:	CC187281	Certification Date:	04/10/2013
Product ID Number:	123595	Expiration Date:	04/09/2019
Cylinder Pressure:	1900 PSIG	MFG Facility:	RBTGS-Shreveport-LA
COA Number:	CC187281-0	Lot Number:	CC187281
Customer PO. NO.:		Tracking Number:	65122268
Customer		Previous Certification Dates:	

This calibration standard has been certified per the 1997 EPA Traceability Protocol, Document EPA-600/97/121, using procedure G1. All values so noted are certified to be +/-1% NIST Traceable.

Do Not Use This Cylinder Below 150 psig (1.0 Megapascal).

Certified Concentration(s)

Component	Concentration	Analytical Principle	Accuracy
Nitrogen Dioxide	**48.4 PPM**	FTIR	**+/- 1% NIST**
AIR	Balance		

Reference Standard(s)

Type	Component	Balance Gas	Concentration	Cylinder Number	Expiration	NIST Reference
SRM	Nitrogen Dioxide	Nitrogen	96.6 PPM	EB0004761		SRM 1684b
SRM	Nitrogen Dioxide	Nitrogen	96.6 PPM	EB0004761		SRM 1684b
			PPM			

Analytical Information

Component		Nitrogen Dioxide	
Analysis Date:		4/3/2013	
Z 0.058	S 89.692	C 44.663	Conc. 48.1 PPM
S 89.725	C 45.585	Z 0.005	Conc. 49.1 PPM
C 45.536	Z 0.012	S 89.526	Conc. 49.1 PPM
Analysis Date:		4/10/2013	
Z 0.004	S 90.067	C 43.292	Conc. 46.7 PPM
S 89.505	C 45.632	Z -0.004	Conc. 49.2 PPM
C 44.833	Z -0.002	S 89.297	Conc. 48.3 PPM

Component			
Analysis Date:			
Z	S	C	Conc.
S	C	Z	Conc.
C	Z	S	Conc.

Z= Zero Gas S= Span Gas C= Candidate Gas

Fred Holt

Fred Holt, CHMM
Quality Control

Red Ball Technical Gas Service
PGVP Vendor ID # G12013
Information and Ordering
800-551-8150
Fax (318-425-6309)

APPENDIX D

QUALITY ASSURANCE AND QUALITY CONTROL DATA

QA/QC PROGRAM

Air Hygiene ensures the quality and validity of its emission measurement and reporting procedures through a rigorous quality assurance (QA) program. The program is developed and administered by an internal QA team and encompasses five major areas:

1. QA reviews of reports, laboratory work, and field testing
2. Equipment calibration and maintenance
3. Chain-of-custody
4. Training
5. Knowledge of current test methods

Each of these areas is discussed individually below.

QA Reviews

Air Hygiene's review procedure includes review of each source test report, along with laboratory and fieldwork, by the QA Team. The most important review is the one that takes place before a test program begins. The QA Team works closely with technical division personnel to prepare and review test protocols. Test protocol review includes selection of appropriate test procedures, evaluation of interferences or other restrictions that might preclude use of standard test procedures, and evaluation and/or development of alternate procedures.

Equipment Calibration and Maintenance

The equipment used to conduct the emission measurements is maintained according to the manufacturer's instructions to ensure proper operation. In addition to the maintenance program, calibrations are carried out on each measurement device according to the schedule outlined by the Environmental Protection Agency. Quality control checks are also conducted in the field for each test program.

Chain-of-Custody

Air Hygiene maintains full chain-of-custody documentation on all samples and data sheets. In addition to normal documentation of changes between field sample custodians, laboratory personnel, and field test personnel, Air Hygiene documents every individual who handles any test component in the field (e.g., probe wash, impinger loading and recovery, filter loading and recovery, etc.). Samples are stored in a locked area to which only Air Hygiene personnel have access. Field data sheets are secured at Air Hygiene's offices upon return from the field.

Training

Personnel's training is essential to ensure quality testing. Air Hygiene has formal and informal training programs, which include:

1. Attendance at EPA-sponsored training courses
2. Enrollment in EPA correspondence courses
3 A requirement for all technicians to read and understand Air Hygiene's QA manual
4. In-house training and QA meetings on a regular basis
5. Maintenance of training records

Knowledge of Current Test Methods

With the constant updating of standard test methods and the wide variety of emerging test procedures, it is essential that any qualified source tester keep abreast of new developments. Air Hygiene subscribes to services, which provide updates on EPA reference methods, rules, and regulations. Additionally, source test personnel regularly attend and present papers at testing and emission-related seminars and conferences. Air Hygiene personnel maintain membership in the Air and Waste Management Association and the American Industrial Hygiene Association.

Reproduction and Distribution Policy

Reproducing portions of this test report may omit critical or substantial documentation or be taken out of context and due care must be exercised in this regard. Furthermore, this test report and its associated data shall not be reproduced in full or in part without the written consent of the customer.

COMBUSTION TESTING QUALITY ASSURANCE ACTIVITIES

A number of quality assurance activities were undertaken before, during, and after this testing project. This section of the report combined with the documentation in Appendix C describes each of those activities.

Each instrument's response was checked and adjusted in the field prior to the collection of data via multi-point calibration. The instrument's linearity was checked by adjusting its zero and span responses to zero nitrogen and an upscale calibration gas in the range of the expected concentrations. The instrument response was then challenged with other calibration gases of known concentration and accepted as being linear if the response of the other calibration gases agreed within plus or minus two percent of the range of predicted values. NO_2 to NO conversion was checked via direct connect with an EPA Protocol certified concentration of NO_2 in a balance of air. Conversion was verified to be between 90 and 110 percent.

After each test run, the analyzers were checked for zero and span drift. This allowed each test run to be bracketed by calibrations and documents the precision of the data just collected. The criterion for acceptable data is that the instrument drift is no more than three percent of the full-scale response. The quality assurance worksheets in the following pages summarize all multipoint calibration checks and zero to span checks performed during the tests. These worksheets (as prepared from the data records of Appendix A) show that no drifts in excess of three percent occurred in the zero to span checks following each test run.

The sampling systems were leak checked by demonstrating that a vacuum greater than 10 in Hg could be held for at least one minute with a decline of less than one inch of Hg. A leak test was conducted after the sample system was set up and before the system was dismantled. This test was conducted to ensure that ambient air had not diluted the sample. Any leakage detected prior to the tests would be repaired and another leak check conducted before testing commenced. No leaks were found during the pre or post-test leak checks.

The absence of leaks in the sampling system was also verified by a sampling system bias check. The sampling system's integrity was tested by comparing the responses of the analyzers to the calibration gases introduced via two paths. The first path was directly into the analyzer and the second path via the sample system at the sample probe. Any difference in the instrument responses by these two methods was attributed to sampling system bias or leakage. The criterion for acceptance is agreement within five percent of the span of the analyzer.

The control gases used to calibrate the instruments were analyzed and certified by the compressed gas vendors to plus or minus one percent accuracy for all gases. EPA Protocol No. 1 was used, where applicable to assign the concentration values traceable to the National Institute of Standards and Technology (NIST), Standard Reference Materials (SRM's). The gas calibration sheets as prepared by the vendor are contained in Appendix C.

Air Hygiene collected and reported the enclosed test data in accordance with the procedures and quality assurance activities described in this test report. Air Hygiene makes no warranty as to the suitability of the test methods. Air Hygiene also assumes no liability relating to the interpretation and use of the test data.

INSTRUMENTAL ANALYSIS QUALITY ASSURANCE DATA

Date: May 29, 2015
Company: XTO Energy, Inc.
Location: Carter County, Oklahoma
Techs: RW

Sample System Leak Check

Date	Sample System	Leak Rate (l/min)
May 29, 2015	1	0

xto-15-multi.ok-eng#8-McCarty 1-36H_805709

Calibration Date: May 29, 2015
Client: XTO Energy, Inc.

NOx Span (ppm) = 482.70

THERMO 42c (NOx Analyzer)				
Certified Concentration (ppm)	Instrument Response (ppm)	Calibration Error (%)	Absolute Conc. (ppm)	Pass or Fail (±2%, ≤0.5ppm)
0.00	0.14	0.03	0.14	YES (%)
251.00	250.38	-0.13	0.62	YES (%)
482.70	480.30	-0.50	2.40	YES (%)
Linearity = 1.005				

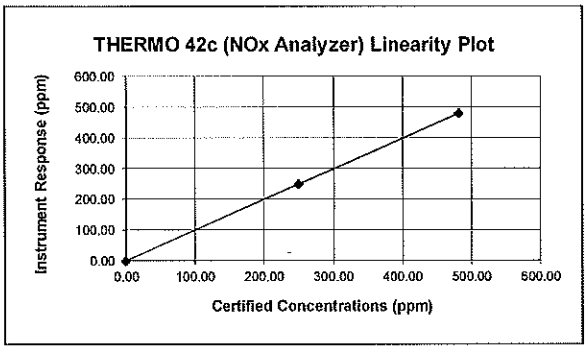

CO Span (ppm) = 485.00

THERMO 48i (CO Analyzer)				
Certified Concentration (ppm)	Instrument Response (ppm)	Calibration Error (%)	Absolute Conc. (ppm)	Pass or Fail (±2%, ≤0.5ppm)
0.00	0.15	0.03	0.15	YES (%)
251.00	252.21	0.25	1.21	YES (%)
485.00	489.82	0.99	4.82	YES (%)
Linearity = 0.991				

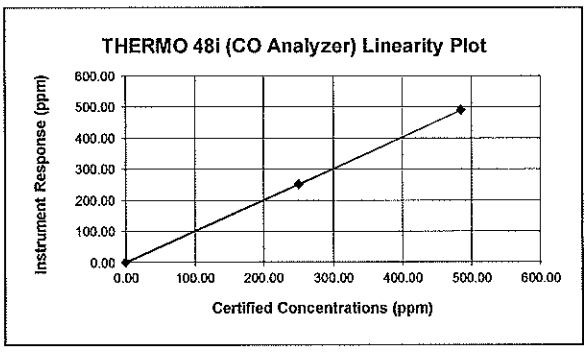

O_2 Span (%) = 21.10

SERVOMEX 1440 (O_2 Analyzer)				
Certified Concentration (%)	Instrument Response (%)	Calibration Error (%)	Absolute Conc. (%)	Pass or Fail (±2%, ≤0.5%)
0.00	0.04	0.19	0.04	YES (%)
11.92	12.01	0.43	0.09	YES (%)
21.10	21.00	-0.47	0.10	YES (%)
Linearity = 1.006				

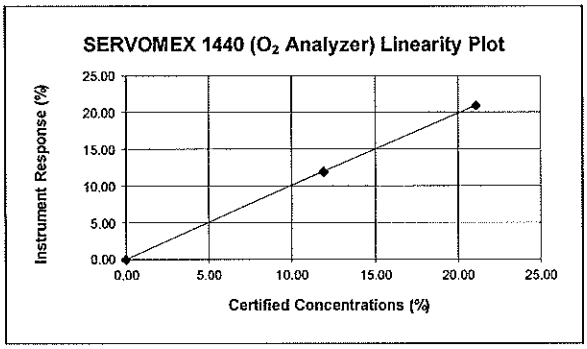

VOC Range (ppm) = 95

VIG 210 (VOC Analyzer)				
Certified Concentration (ppm)	Instrument Response (ppm)	Calibration Error (%)	Estimated Point (ppm)	Pass or Fail (±2,5%)[1]
0.00	0.00	0.00	N/A	YES
24.95	25.23	0.49	25.11	YES
45.10	45.33	-0.12	45.38	YES
85.50	86.04	0.57	N/A	YES
Linearity = 0.995				

[1]-zero/high based on 2% of span,low/mid based on 5% of concentration

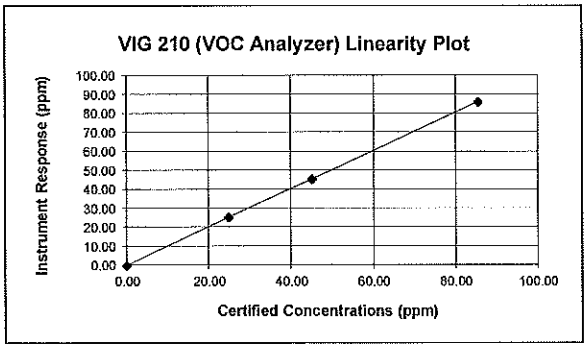

NOx Converter Efficiency

Date: May 29, 2015

Analyzer: INST-NX-0012

RM 7E, (02-27-14), Sections 7.1.4; 8.2.4.1; 12.7; and 13.5 Introduce NO_2 to the analyzer and record the NOx concentration displayed. ... Calculate the converter efficiency using Equation 7E-7. The specification for converter efficiency must be met. ... Air Hygiene also references ALT-0013 for specific NO_2 concentration (40-60 ppm) and EPA Traceability Protocol requirements (±2%).

Audit Gas:	NO_2 Concentration (C_v), ppmvd	**48.40**
Converter Efficiency Calculations:		
	Analyzer Reading, NO Channel, ppmvd	**1.44**
	Analyzer Reading, NOx Channel, ppmvd	**47.97**
	Analyzer Reading, NO_2 Channel ($C_{Dir(NO2)}$), ppmvd	**46.53**
	Converter Efficiency, %	**96.14**

RM 7E, (02-27-14), 13.5 NO_2 to NO Conversion Efficiency Test (as applicable). The NO_2 to NO conversion efficiency, calculated according to Equation 7E-7, must be greater than or equal to 90 percent.

$$Eff_{NO2} = \left(\frac{C_{Dir}}{C_V}\right) \times 100$$

Eq. 7E-7 = $\frac{46.53 \text{ ppmvd}}{48.40 \text{ ppmvd}}$ x 100 = 96.14%

Date/Time mm/dd/yy hh:mm:ss	Elapsed Time Seconds	NOx ppmvd	NO ppmvd
05/29/15 09:22:34	56644	48.28	1.74
05/29/15 09:22:44	56654	47.71	1.74
05/29/15 09:22:54	56664	47.75	1.84
05/29/15 09:23:04	56674	47.61	1.90
05/29/15 09:23:14	56684	47.52	1.76
05/29/15 09:23:24	56694	47.47	1.64
05/29/15 09:23:34	56704	47.46	1.64
05/29/15 09:23:44	56714	47.58	1.62
05/29/15 09:23:54	56724	47.71	1.54
05/29/15 09:24:04	56734	47.97	1.44
05/29/15 09:24:14	56744	48.14	1.50
05/29/15 09:24:24	56754	48.30	1.49
05/29/15 09:24:34	56764	48.47	1.53

DRIFT AND BIAS CHECK				
Run - 1	O_2	NOx	CO	VOC
Raw Average	0.01	55.80	426.54	10.92
Corrected Average	0.00	56.35	434.88	13.59
Initial Zero	0.04	0.17	0.25	0.00
Final Zero	0.12	1.65	0.68	0.00
Avg. Zero	0.08	0.91	0.47	0.00
Initial UpScale	11.93	244.38	247.16	25.01
Final UpScale	11.91	246.49	245.60	25.17
Avg. UpScale	11.92	245.44	246.38	25.09
Sys Resp (Zero)	0.04	0.14	0.15	0.00
Sys Resp (Upscale)	12.01	250.38	252.21	25.23
Upscale Cal Gas	11.92	251.00	251.00	24.95
Initial Zero Bias	0.00%	0.01%	0.02%	0.00%
Final Zero Bias	0.38%	0.31%	0.11%	0.00%
Zero Drift	0.38%	0.31%	0.09%	0.00%
Initial Upscale Bias	-0.38%	-1.24%	-1.04%	-0.23%
Final Upscale Bias	-0.47%	-0.81%	-1.36%	-0.06%
Upscale Drift	0.09%	0.44%	0.32%	0.17%
Alternative Specification Abs Diff: Initial Zero	0.00	0.03	0.10	--
Alternative Specification Abs Diff: Final Zero	0.08	1.51	0.53	--
Alternative Specification Abs Diff: Initial Upscale	0.08	6.00	5.05	--
Alternative Specification Abs Diff: Final Upscale	0.10	3.89	6.61	--
Calibration Span	21.10	482.70	485.00	95.00
3% of Cal. Span (drift)	0.63	14.48	14.55	2.85
5% of Cal. Span (bias)	1.06	24.14	24.25	4.75

DRIFT AND BIAS CHECK				
Run - 2	O_2	NOx	CO	VOC
Raw Average	0.08	28.39	301.80	9.67
Corrected Average	0.00	28.21	307.56	12.06
Initial Zero	0.04	0.17	0.25	0.00
Final Zero	0.12	1.65	0.68	0.00
Avg. Zero	0.08	0.91	0.47	0.00
Initial UpScale	11.93	244.38	247.16	25.01
Final UpScale	11.91	246.49	245.60	25.17
Avg. UpScale	11.92	245.44	246.38	25.09
Sys Resp (Zero)	0.04	0.14	0.15	0.00
Sys Resp (Upscale)	12.01	250.38	252.21	25.23
Upscale Cal Gas	11.92	251.00	251.00	24.95
Initial Zero Bias	0.00%	0.01%	0.02%	0.00%
Final Zero Bias	0.38%	0.31%	0.11%	0.00%
Zero Drift	0.38%	0.31%	0.09%	0.00%
Initial Upscale Bias	-0.38%	-1.24%	-1.04%	-0.23%
Final Upscale Bias	-0.47%	-0.81%	-1.36%	-0.06%
Upscale Drift	0.09%	0.44%	0.32%	0.17%
Alternative Specification Abs Diff: Initial Zero	0.00	0.03	0.10	--
Alternative Specification Abs Diff: Final Zero	0.08	1.51	0.53	--
Alternative Specification Abs Diff: Initial Upscale	0.08	6.00	5.05	--
Alternative Specification Abs Diff: Final Upscale	0.10	3.89	6.61	--
Calibration Span	21.10	482.70	485.00	95.00
3% of Cal. Span (drift)	0.63	14.48	14.55	2.85
5% of Cal. Span (bias)	1.06	24.14	24.25	4.75

DRIFT AND BIAS CHECK				
Run - 3	O_2	NOx	CO	VOC
Raw Average	0.08	28.09	269.12	8.61
Corrected Average	0.00	27.90	274.21	10.74
Initial Zero	0.04	0.17	0.25	0.00
Final Zero	0.12	1.65	0.68	0.00
Avg. Zero	0.08	0.91	0.47	0.00
Initial UpScale	11.93	244.38	247.16	25.01
Final UpScale	11.91	246.49	245.60	25.17
Avg. UpScale	11.92	245.44	246.38	25.09
Sys Resp (Zero)	0.04	0.14	0.15	0.00
Sys Resp (Upscale)	12.01	250.38	252.21	25.23
Upscale Cal Gas	11.92	251.00	251.00	24.95
Initial Zero Bias	0.00%	0.01%	0.02%	0.00%
Final Zero Bias	0.38%	0.31%	0.11%	0.00%
Zero Drift	0.38%	0.31%	0.09%	0.00%
Initial Upscale Bias	-0.38%	-1.24%	-1.04%	-0.23%
Final Upscale Bias	-0.47%	-0.81%	-1.36%	-0.06%
Upscale Drift	0.09%	0.44%	0.32%	0.17%
Alternative Specification Abs Diff: Initial Zero	0.00	0.03	0.10	--
Alternative Specification Abs Diff: Final Zero	0.08	1.51	0.53	--
Alternative Specification Abs Diff: Initial Upscale	0.08	6.00	5.05	--
Alternative Specification Abs Diff: Final Upscale	0.10	3.89	6.61	--
Calibration Span	21.10	482.70	485.00	95.00
3% of Cal. Span (drift)	0.63	14.48	14.55	2.85
5% of Cal. Span (bias)	1.06	24.14	24.25	4.75

APPENDIX E

FUEL ANALYSIS RECORDS

Legacy Measurement Solutions Upload

MOUNDS , OK

918-665-5400

Customer	: 1028 - XTO	**Date Sampled**	: 02/17/2015
Station ID	: 93193	**Date Analyzed**	: 03/05/2015
Cylinder ID	: 5366	**Effective Date**	: 03/01/2015
Producer	: XTO ENERGY	**Cyl Pressure**	: 948
Lease	: MCCARTY 1-36H INJ	**Temp**	: 113
Area	: 127 - XTO-ARDMORE	**Cylinder Type**	: Spot
State	:	**Sample By**	: S BROCK

COMPONENT	MOL%	GPM@0(PSIA)
Methane	78.4475	0.000
Ethane	11.4227	3.058
Propane	4.6162	1.273
Iso-Butane	0.5914	0.194
Normal-Butane	1.5150	0.478
Neo-Pentane	0.0000	0.000
Iso-Pentane	0.3561	0.130
Normal-Pentane	0.5014	0.182
Hexanes++	0.5269	0.229
Nitrogen	1.4867	0.000
Carbon-Dioxide	0.5358	0.000
Oxygen	0.0000	0.000
Hydrogen Sulfide	0.0003	0.000
TOTAL	**100.0000**	**5.544**

Compressibility Factor (Z) @ 0 @ 60 Deg. F = 0.9965 **C5+ GPM** : 0.31200

Ideal Gravity: 0.7265 **Real Gravity:** 0.7288 **C5+ Mole %** : 1.3844

BTU @ (PSIA)	@14.65	@14.696	@14.73	@15.025
Ideal GPM	5.507	5.524	5.537	5.648
Ideal BTU Dry	1,236.76	1,240.64	1,243.51	1,268.42
Ideal BTU Sat	1,215.11	1,219.00	1,221.87	1,246.77
Real GPM	5.526	5.544	5.557	5.668
Real BTU Dry	1,241.14	1,245.06	1,247.95	1,273.03
Real BTU Sat	1,219.92	1,223.83	1,226.72	1,251.82

Comments:

Gas Analysis performed in accordance with GPA 2261 **Sample Count** : 230002970

Analytical Calculations performed in accordance with GPA 2172 **COC** :

Client: XTO Energy, Inc.
Location: McCarty 1-36H
Date: May 29, 2015
Project #: xto-15-multi.ok-eng#8

Natural Gas - Fuel Analysis

Standardized to 68 deg F and 14.696 psia - EPA Standards

Gas Component		Mole (%)	Molecular[1] Weight (lb/lb-mole)	Lbs Component per Lb-Mole of Gas	Wt. % of Component	Ideal Gross[1,3] Heating Value (Btu/ft^3)	Fuel Heat Value [HHV] (Btu/SCF)	Ideal Net[1,3] Heating Value (Btu/ft^3)	Fuel Heat Value [LHV] (Btu/SCF)
Methane	CH_4	78.448	16.0430	12.59	59.92	994.85	780.43	895.75	702.70
Ethane	C_2H_6	11.423	30.0700	3.43	16.35	1,743.15	199.11	1,594.41	182.12
Propane	C_3H_8	4.616	44.0970	2.04	9.69	2,478.35	114.41	2,280.17	105.26
iso-Butane	iC_4H_{10}	0.591	58.1230	0.34	1.64	3,203.11	18.94	2,955.38	17.48
n-Butane	nC_4H_{10}	1.515	58.1230	0.88	4.19	3,213.35	48.68	2,965.62	44.93
Iso-Pentane	iC_5H_{12}	0.356	72.1500	0.26	1.22	3,940.87	14.03	3,643.50	12.97
n-Pentane	nC_5H_{12}	0.501	72.1500	0.36	1.72	3,948.75	19.80	3,648.32	18.29
Hexanes	C_6H_{14}	0.527	86.1770	0.45	2.16	4,684.54	24.68	4,337.82	22.86
Heptanes	C_7H_{16}	0.000	100.2040	0.00	0.00	5,419.94	0.00	5,023.77	0.00
Octanes	C_8H_{18}	0.000	114.2310	0.00	0.00	6,155.14	0.00	5,709.23	0.00
Carbon Dioxide	CO_2	0.536	44.0100	0.24	1.12	0.00	0.00	0.00	0.00
Nitrogen	N_2	1.487	28.0134	0.42	1.98	0.00	0.00	0.00	0.00
Hydrogen Sulfide	H_2S	0.000	34.0800	0.00	0.00	627.54	0.00	578.00	0.00
Oxygen	O_2	0.000	31.9988	0.00	0.00	0.00	0.00	0.00	0.00
Helium	He	0.000	4.0026	0.00	0.00	0.00	0.00	0.00	0.00
Hydrogen	H_2	0.000	2.0159	0.00	0.00	319.34	0.00	269.82	0.00
Totals		**100.000**		**21.01**	**100.00**	**dry**	**1,220.09**	**dry**	**1,106.61**
						wet[2,5]	**1,191.96**	**wet[2,5]**	**1,081.10**

Characteristics of Fuel Gas		
Molecular Weight of gas =	21.005	lb/lb-mole
Btu per lb. of gas[4] =	22,376.218	gross (HHV)
Btu per lb. of gas[4] =	20,294.980	net (LHV)
Density of fuel gas[2] =	0.0545	lb/cu. ft
Wt % VOC in fuel gas =	20.63	%
Specific Gravity[1] =	0.7253	

Component	Wt%
carbon	75.22
oxygen	0.82
hydrogen	21.98
nitrogen	1.98
helium	0.00
sulfur	0.00
Total	**100.00**

F-Factor (SCF dry exhaust per MMBtu [HHV]) = 8,714.27
(Based on EPA RM-19) at 68 deg F and 14.696 psia

F-Factor Calculation:

F-Factor = 1,000,000*((3.64*%H)+(1.53*%C)+(0.57*%S)+(0.14*%N)-(0.46*%O))/GCV
GCV = Gross Btu per lb. of gas (HHV)
%H, %C, %S, %N, & %O are percent weight values calculated from fuel analysis and have units of (scf/lb)/%
Density of natural gas based on specific gravity multiplied by density of air at 68 deg F and 14.696 psia.

References:

[1] ASTM D 3588
[2] Civil Engineering Reference Manual, 7th ed. - Michael R. Lindeburg
[3] Mark's Standard Handbook for Mechanical Engineers, 10th ed. - Eugene A. Avallone, Theodore Baumeister III
[4] Introduction to Fluid Mechanics, 3rd ed. - William S. Janna
[5] GPA Reference Bulletin 181-86, revised 1986, reprinted 1995

APPENDIX F

FIELD DATA SHEETS

ENGINE TEST - FIELD DATA SHEET

McCarty

AIR HYGIENE

Company:	XTO Energy Inc.
Location:	Carter Co. Oklahoma
Date:	5-29-2015
Unit Make and Model:	Caterpillar G3306 NA
Unit Number:	805709
Serial Number:	R6501337
Data Recorded By:	RW
Tested With AHI Unit(s):	Truck(s): 162 Trailer(s): 208
LDEQ Warmup/Cal Req:	On (Day/Time): Cal (Day/Time):

CYLINDER SERIAL NUMBERS		O_2	NOx	CO	THC	CO_2	SO_2
	Low						
	Mid						
	High						

NO_2 CONVERSION	
NO_2 Gas (ppm)	48.4
NO Reading (ppm)	
NOx Reading (ppm)	
Cylinder Num	

Stack Dia. = _____
Measured By: _____
Measured With: _____

RUN INFORMATION	Run #1	Run #2	Run #3	Run #4	Average
Time Start (hh:mm:ss)	1115:14	1225:14	1326:14		
Time Stop (hh:mm:ss)	1214:44	1324:44	1425:44		
Barometric Pressure (in. Hg)	30.51	30.53	30.53		
Ambient Temperature (°F)	76	78	78		
Relative Humidity (%)	68	69	68		
Suction Pressure (psig)	57.8	57.6	57.8		
Discharge Pressure (psig)	932	930	928		
Rated Horsepower (hp)	203	203	203		
Actual Horsepower (hp)					
Fuel Flow (SCF/hr)	16.2	16.2	16.0		
Engine Operating Hours	4200				
Engine Speed (npg) or (rpm)	1520	1517	1518		
Air Manifold Temperature (°F)	112	113	113		
Air Manifold Pressure (psig or in. Hg)	13.0	13.1	13.1		
Engine Timing BTDC					

REPORT INFORMATION	INSTRUMENT	SERIAL #
O_2	1440	
NOx	42	
CO	48L	
THC	210	
CO_2	—	—
SO_2	—	—

RESPONSE TIME	TIME (hh:mm)	RESP (min)
Gas Inject	/ /	
1st Inst. @ 95%	/ /	/ /
2nd Inst. @ 95%	/ /	/ /
3rd Inst. @ 95%	/ /	/ /

CALIBRATION	O_2		NOx		CO		THC		CO_2	
	Conc.	Actual	Conc.	Actual	Conc.	Actual	Conc.	Actual	Conc.	Actual
Zero Gas	0	0.04	0	0.14	0	0.15	0	0.00		
Low Gas							24.9	25.23		
Mid Gas	11.9	12.01	251	250.38	251	252.21	45.1	45.33		
High Gas	21.1	21.0	478.7	480.30	458	459.82	85.5	86.04		

BIAS	O_2		NOx		CO		THC		CO_2	
	Zero	Mid	Zero	Mid	Zero	Mid	Zero	Mid	Zero	Mid
Initial/Run #1	0.04	11.93	0.17	244.38	0.25	247.16	0.00	25.01		
Run #1/Run #2										
Run #2/Run #3										
Run #3/Run #4	0.0	11.91	1.65	246.49	0.68	245.60	0.00	25.17		
Run #4/Final										
Bias Gas Actual Conc.										

this page intentionally left blank
end of report

AC/AI/40

AIR HYGIENE, INC.

Testing Solutions for a Better World

RECEIVED

JAN 28 2015

Air Toxics & Inspection
Coordination Branch
6EN-A

January 8, 2015

Regional Administrator
U.S. EPA - Region 6
Fountain Place 12th Floor, Suite 1200
1445 Ross Avenue
Dallas, TX 75202-2733

Dear Administrator:

Enclosed please find one copy each of the following 40 CFR 60, Subpart JJJJ emission compliance test reports, submitted by Air Hygiene International, Inc., on behalf of XTO Energy, Inc. for the following engines.

- Enderco 1-4, Franki 1-4H9, unit #6785, Love County, OK
- Hart 1-03H, unit #805637, Love County, OK
- Miller 2-5 2H35, unit #6684, Carter County, OK
- Skytrain, unit #E01161, Carter County, OK

If you have any questions, comments, or concerns please feel free to contact me at (918) 810-5638 or mplummer@airhygiene.com.

Sincerely,

Mike Plummer, QSTI
Regional Manager – Fort Worth, TX

Encl. (4)

cc:
xto-14-multi.ok-eng#13
William Payne, XTO Energy, Inc.

AIR HYGIENE, INC.

Testing Solutions for a Better World

EMISSION COMPLIANCE TEST
EPA 40 CFR PART 60 SUBPART JJJJ
FOR THE
CATERPILLAR, G3306 TA, UNIT #805637,
SERIAL #R6S02346
PREPARED FOR
XTO ENERGY, INC.
AT THE
HART 1-03H
LOVE COUNTY, OKLAHOMA
NOVEMBER 17, 2014

PERMIT ID: 2013-2068-NOI

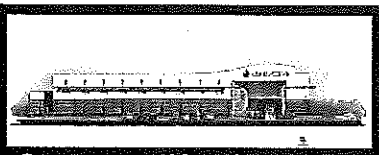

Corporate Headquarters
1600 W Tacoma Street
Broken Arrow, OK 74012

AIR HYGIENE, INC.

(918) 307-8865 or (888) 461-8778
www.airhygiene.com

Remote Testing Offices
Las Vegas, NV 89156
Ft. Worth, TX 76028
Humble, TX 77338
Shreveport, LA 71115
Miami, FL 33101
Philadelphia, PA 19136

EMISSION COMPLIANCE TEST
EPA 40 CFR PART 60 SUBPART JJJJ
FOR THE
CATERPILLAR, G3306 TA, UNIT #805637,
SERIAL #R6S02346
PREPARED FOR
XTO ENERGY, INC.
AT THE
HART 1-03H
LOVE COUNTY, OKLAHOMA
NOVEMBER 17, 2014

Prepared and Reviewed by:

Nathan Arthur, QSTI
Project Manager

Matt McBride, QSTI
Test Manager

John M. Plummer, QSTI
Regional Manager-Fort Worth, TX

Table of Contents

1.0 INTRODUCTION ____ *1*

1.1 TEST PURPOSE AND OBJECTIVES ____ 1

1.2 SUMMARY OF TEST PROGRAM ____ 1

1.2.1 Participating Organizations ____ 1
1.2.2 Industry ____ 1
1.2.3 Air Permit and Federal Requirements ____ 1
1.2.4 Plant Location ____ 1
1.2.5 Equipment Tested ____ 1
1.2.6 Emission Points ____ 2
1.2.7 Emission Parameters Measured ____ 2
1.2.8 Date of Emission Test ____ 2
1.2.9 State Certification ____ 2

1.3 KEY PERSONNEL ____ 2

2.0 SUMMARY OF TEST RESULTS ____ *2*

3.0 SOURCE OPERATION ____ *4*

3.1 PROCESS DESCRIPTION ____ 4

3.2 SAMPLING LOCATION ____ 4

4.0 SAMPLING AND ANALYTICAL PROCEDURES ____ *4*

4.1 TEST METHODS ____ 4

4.2 INSTRUMENT CONFIGURATION AND OPERATIONS FOR GAS ANALYSIS ____ 5

APPENDICES

Appendix A Test Results and Calculations

Appendix B Emission Data Records

Appendix C Calibration Gas Certifications

Appendix D Quality Assurance and Quality Control Data

Appendix E Fuel Analysis Records

Appendix F Field Data Sheets

Emissions Compliance Test
Caterpillar, G3306 TA, Unit #805637, Serial #R6S02346
XTO Energy, Inc.
Hart 1-03H
Love County, Oklahoma
November 17, 2014

1.0 INTRODUCTION

Air Hygiene International, Inc. (Air Hygiene) has completed the emissions testing study for nitrogen oxides (NOx), carbon monoxide (CO), volatile organic compounds (VOC), and oxygen (O_2) from the exhaust of the Caterpillar, G3306 TA, Unit #805637, Serial #R6S02346 for XTO Energy, Inc. at the Hart 1-03H near Love County, Oklahoma. This report details the background, results, process description, and the sampling/analysis methodology of the stack sampling survey conducted on November 17, 2014.

1.1 TEST PURPOSE AND OBJECTIVES

The purpose of the test was to conduct the initial emission test to document levels of selected pollutants with the unit operating within 10% of peak or highest achievable load. The information will be used to confirm compliance with the United States Environmental Protection Agency (EPA) Code of Federal Regulations (CFR), Title 40, Part 60 (40 CFR 60), Subpart JJJJ and the Oklahoma Department of Environmental Quality (ODEQ) air quality permit requirements. The specific objective was to determine the emission concentration of NOx, CO, VOC, and O_2 from the exhaust of XTO Energy, Inc.'s Caterpillar, G3306 TA, Unit #805637, Serial #R6S02346.

1.2 SUMMARY OF TEST PROGRAM

The following list details pertinent information related to this specific project:

1.2.1 Participating Organizations
- Oklahoma Department of Environmental Quality (ODEQ)
- XTO Energy, Inc.
- Air Hygiene

1.2.2 Industry
- Natural Gas Transport and Processing

1.2.3 Air Permit and Federal Requirements
- Permit Number: 2013-2068-NOI
- 40 CFR 60, Subpart JJJJ

1.2.4 Plant Location
- Hart 1-03H near Love County, Oklahoma
- GPS Coordinates [Latitude 33.9700, Longitude -97.1924]

1.2.5 Equipment Tested
- Caterpillar, G3306 TA, Unit #805637, Serial #R6S02346
- Engine Hours: 1,667
- Engine Name Plate and Serial Number Verification

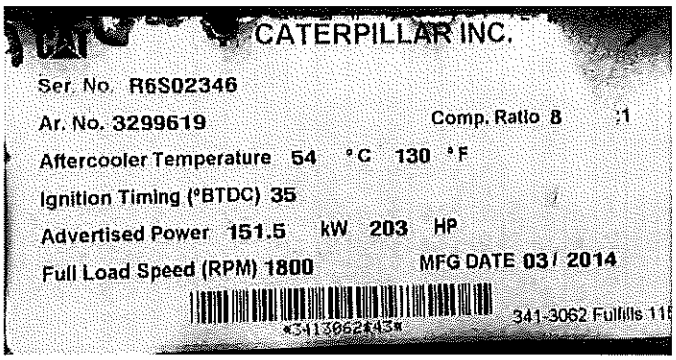

1.2.6 Emission Points
- Exhaust from the Caterpillar, G3306 TA, Unit #805637, Serial #R6S02346

1.2.7 Emission Parameters Measured
- NOx
- CO
- VOC
- O_2

1.2.8 Date of Emission Test
- November 17, 2014

1.2.9 State Certification
- State of Oklahoma: Certificate of Authority No. 4589

1.3 KEY PERSONNEL

XTO Energy, Inc.:	William Payne	817-885-3165
Air Hygiene:	Mike Plummer	918-810-5638

2.0 SUMMARY OF TEST RESULTS

Results from the sampling conducted on XTO Energy, Inc.'s Caterpillar, G3306 TA, Unit #805637, Serial #R6S02346 located at the Hart 1-03H on November 17, 2014 are summarized in the following table and relate only to the items tested.

The results of all measured pollutant emissions were below the required limits. All testing was performed without any real or apparent errors. All testing was conducted according to the approved testing protocol.

TABLE 2.1: ENGINE EMISSIONS REPORT
XTO ENERGY, INC.
CATERPILLAR, G3306 TA, UNIT #805637, SERIAL #R6S02346

Test Period:	Qtr 4 - 2014		**Manufacturing or Rebuild Date**		**Air Permit Number:**	2013-2068-NOI
Location:	Hart 1-03H				**Unit Number:**	805637
Date:	November 17, 2014		03/07/14		**Suction Pressure (psi):**	54
Project Number:	xto-14-multi.ok-eng#13				**Discharge Pressure (psi):**	1,049
Engine Manufacturer:	Caterpillar		**Federal Regulatory Citation**		**Stack Exhaust Temperature (°F):**	906
Engine Model:	G3306 TA				**Rated Horsepower (hp_r):**	203
Engine Serial Number:	R6S02346				**Brake Horsepower (bhp):**	127
Analyzer Manufacturers:	TECO(NOx), TECO(CO), SERV(O2), VIG(VOC)		Subpart JJJJ		**Engine Fuel Flow (SCFH):**	1,140
Analyzer Model Numbers:	42c, 48i, 1440, 210				**Specific Gravity:**	0.7964
Date Analyzers Calibrated:	November 17, 2014		40 CFR 60.4233 (e)		**Fuel Heating Value [LHV] (Btu/SCF):**	1,196
Test Results and Calculations:	Appendix A				**BSFC (Btu/hp*hr):**	10,736
Emission Data Records:	Appendix B				**Annual Hours Allowed to Operate:**	8,760
Calibration Gas Certifications:	Appendix C				**Engine Speed (rpm):**	1,402
Quality Assurance and QC Data:	Appendix D				**Air Manifold Temp (°F):**	86
Fuel Analysis Records:	Appendix E				**Air Manifold Pressure (psia):**	15.6
Ambient Temperature (°F):	37.3				**Operating Hours (hours):**	1,667
Barometric Pressure (in. Hg):	29.41				**Available Horsepower (hp_a):**	158
Relative Humidity (%):	47				**Rated Engine Speed (rpm):**	1,800
					Rated Manifold Pressure (in. Hg (abs)):	--
					Engine Load (%):	80
					Differential Pressure (in H_2O):	--

Emission Test Results

Pollutant (units)		Stack Test Results	State Limits	Federal Limits	Passing
O_2	(%)	0.00	--	--	--
NOx	(ppmvd)	27.27	--	--	--
CO	(ppmvd)	224.35	--	--	--
VOC	(ppmvd)	0.50	--	--	--
NOx	(ppmvd@15%O_2)	7.70	82.00	82.00	YES
CO	(ppmvd@15%O_2)	63.33	270.00	270.00	YES
VOC	(ppmvd@15%O_2)	0.14	60.00	60.00	YES
NOx	(lb/hr)	0.04	--	--	--
CO	(lb/hr)	0.21	--	--	--
VOC	(lb/hr)	0.00	--	--	--
NOx	(g/hp*hr)	0.15	1.00	1.00	YES
CO	(g/hp*hr)	0.76	2.00	2.00	YES
VOC	(g/hp*hr)	0.00	0.70	0.70	YES

-Brake horsepower available from engine panel.
-Available horsepower based on the engine speed ratio (actual vs rated), see Engine Spec Sheet, Appendix B.
-Load based on Brake horsepower vs available horsepower.

All testing conducted according to United States Environmental Protection Agency (EPA), Methods: 3a, 4, 7e, 10, 19 and 18/25a.

Tested By: Air Hygiene International, Inc.
Tester(s) / Test Unit(s): MP/216

3.0 SOURCE OPERATION

3.1 PROCESS DESCRIPTION

The unit tested was a Caterpillar, G3306 TA, Unit #805637, Serial #R6S02346. The engine is rated at 203 horsepower. The engine emissions are vented to the atmosphere through an exhaust system extending from the engine. A Non-Selective Catalytic Reduction (NSCR) catalyst is located between the engine and the exhaust stack.

3.2 SAMPLING LOCATION

The stack measures 6 inches in diameter with an elevation at the top of 12 feet above grade. The stack lacked exhaust ports and testing was conducted using a stainless steel hook over the top of the stack and down into the exhaust. The hook extended at least 0.5 stack diameters from the exit to the atmosphere and at least 2.0 stack diameters from the upstream disturbance. All exhaust samples for gaseous emissions were continuously drawn from a single point near the center of the stack.

4.0 SAMPLING AND ANALYTICAL PROCEDURES

4.1 TEST METHODS

The emission test on the Caterpillar, G3306 TA, Unit #805637, Serial #R6S02346 at the Hart 1-03H was performed following United States Environmental Protection Agency (EPA) methods described by the Code of Federal Regulations (CFR). Table 4.1 outlines the specific methods performed on November 17, 2014.

TABLE 4.1
SUMMARY OF SAMPLING METHODS

Pollutant or Parameter	Sampling Method	Analysis Method
Sample Point Location	EPA Method 1	Equal Area Method
Oxygen	EPA Method 3A	Paramagnetic Cell
Stack Moisture Content	EPA Method 4	Section 16.4 FFactor Based Calculation
Nitrogen Oxides	EPA Method 7E	Chemiluminescent Analyzer
Carbon Monoxide	EPA Method 10	Nondispersive Infrared Analyzer
Volatile Organic Compounds	EPA Method 18/25A	Gas Chromatograph and Flame Ionization Detector
Stack Flow Rate	EPA Method 19	Dry Oxygen F Factor
Calibration Gas Dilution	EPA Method 205	Mass Flow Controller

4.2 INSTRUMENT CONFIGURATION AND OPERATIONS FOR GAS ANALYSIS

The sampling and analysis procedures used during these tests conform with the methods outlined in the Code of Federal Regulations (CFR), Title 40, Part 60, Appendix A, Methods 1, 3A, 4, 7E, 10, 18, 19, 25A; and 40 CFR 51, Appendix M, 205.

Figure 4.1 depicts the sample system used for the real-time gas analyzer tests. The gas sample was continuously pulled through the probe and transported, via heat-traced Teflon® tubing, to a stainless steel minimum-contact condenser designed to dry the sample. Transportation of the sample, through Teflon® tubing, continued into the sample manifold within the mobile laboratory via a stainless steel/Teflon® diaphragm pump. From the manifold, the sample was partitioned to the real-time analyzers through rotameters that controlled the flow rate of the sample. Exhaust samples were routed to the wet based analyzer prior to gas conditioning.

Figure 4.1 shows that the sample system was also equipped with a separate path through which a calibration gas could be delivered to the probe and back through the entire sampling system. This allowed for convenient performance of system bias checks as required by the testing methods.

All instruments were housed in an air-conditioned, trailer-mounted mobile laboratory. Gaseous calibration standards were provided in aluminum cylinders with the concentrations certified by the vendor. EPA Protocol No. 1 was used to determine the cylinder concentrations where applicable (i.e. NOx calibration gases).

Table 4.2 provides a description of the analyzers used for the instrument portion of the tests. All data from the continuous monitoring instruments were recorded on a Logic Beach Portable Data Logging System Hyperlogger which retrieves calibrated electronic data from each instrument every one second and reports an average of the collected data every 30 seconds. Data records can be found in Appendix A and B of this report.

Three test runs of approximately 60 minutes each were conducted on the Caterpillar, G3306 TA, Unit #805637, Serial #R6S02346 with the unit operating within 10% of peak or highest achievable load for NOx, CO, VOC, and O_2.

The stack gas analysis for O_2 concentrations was performed in accordance with procedures set forth in EPA Method 3A and 20. The O_2 analyzer uses a paramagnetic cell detector.

EPA Method 7E was used to determine concentrations of NOx. A chemiluminescent analyzer was used to determine the nitrogen oxides concentration in the gas stream. A NO_2 in nitrogen certified gas cylinder was used to verify at least a 90 percent NO_2 conversion on the day of the test.

CO emission concentrations were quantified in accordance with procedures set forth in EPA Method 10. A continuous nondispersive infrared (NDIR) analyzer was used for this purpose.

VOC emission concentrations were quantified in accordance with principles set forth in EPA Method 18 and 25A. A VIG 210 was used for this purpose. The VIG 210 includes both a conventional total hydrocarbon (THC) analyzer and an automated gas chromatograph (GC) for determining VOCs. Two FIDs (flame ionization detectors) were used for the measurements: one for the THC channel and the other for the automated GC which measured methane, ethane, and residual (VOCs). During each sample period gas sample is injected directly to the first FID. This detector responded to all hydrocarbons in the sample and is used as a traditional FID as needed. For VOC sampling, a heated gas sampling valve is used for direct injection of the gas on the GC column per Method 18, Section 8.2.2. The GC column separates hydrocarbon components based on their molecular configurations, weights, and boiling points. In this application, the analyzer used the gas chromatograph column to separate methane and ethane from the heavier residual hydrocarbons (i.e. VOCs). Methane eluted from the

sample first, it was immediately detected by the second FID; ethane eluted from the column second and was also detected by the second FID. The flow in the GC column was reversed (back-flushed) and the residual components were recombined and detected by the second FID as residual VOCs. Peak residual (VOC) values are reported by the analyzer between each sample period. EPA Method 7E bias and drift check criterion was used to validate data instead of EPA Method 18 recovery studies as it is has more stringent and comprehensive quality assurance procedures. EPA Protocol No. 1 traceable propane calibration gas was used to calibrate the residual channel of the analyzer and the calibration procedure followed the requirements of EPA Method 25A. In this application, the target compound was VOC (non methane, non ethane hydrocarbon); therefore, the methane, ethane, and total hydrocarbon channels of the analyzer were not formally calibrated.

The calibration gas dilutions were performed in accordance with procedures set forth in EPA Method 205. The gas dilutor uses a mass flow controller and processing software to create user specified blends and concentrations of target calibration gases. Per the method requirements field verification was performed by introducing a mid-level supply gas directly into the analyzer, bypassing the gas dilution system. The procedure was repeated for a total of three mid-level supply gas injections. The difference between the certified concentration of the mid-level supply gas and the average instrument response was within two percent (Appendix D). Also, documentation of the date of the most recent dilution system calibration against flow standards and the name of the manufacturer who carried out the calibration is located in Appendix D of the test.

TABLE 4.2
ANALYTICAL INSTRUMENTATION

Parameter	Manufacturer and Model	Range	Sensitivity	Detection Principle
NOx	THERMO 42c	User may select up to 5,000 ppm	0.1 ppm	Thermal reduction of NO_2 to NO. Chemiluminescence of reaction of NO with O_3. Detection by PMT. Inherently linear for listed ranges.
CO	THERMO 48i	User may select up to 10,000 ppm	0.1 ppm	Infrared absorption, gas filter correlation detector, microprocessor based linearization.
Calibration Gas Dilution	ENVIRONICS 4040	User may select conc. and flow rate	0.1 ppm	Mass Flow Controller
VOC	VIG 210	User may select up to 10,000 ppm	0.1 ppm	GC Column and Flame Ionization Detector
O_2	SERVOMEX 1440	0-25%	0.1%	Paramagnetic cell, inherently linear.

COPYRIGHT © 2011 AIR HYGIENE INTERNATIONAL, INC.

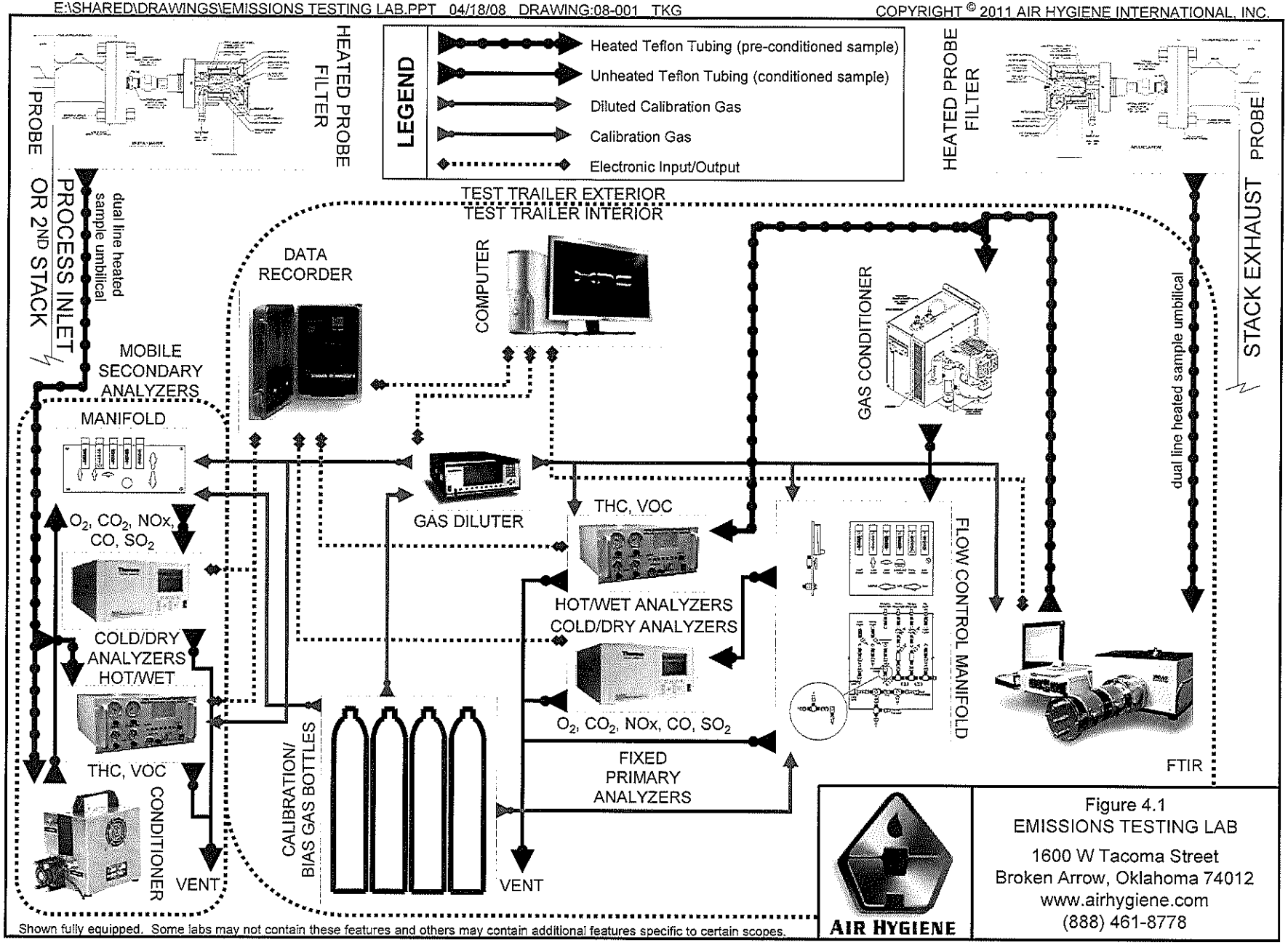

Shown fully equipped. Some labs may not contain these features and others may contain additional features specific to certain scopes.

Figure 4.1
EMISSIONS TESTING LAB

1600 W Tacoma Street
Broken Arrow, Oklahoma 74012
www.airhygiene.com
(888) 461-8778

APPENDIX A

TEST RESULTS AND CALCULATIONS

EMISSION CALCULATIONS SUMMARY TABLES

Company: XTO Energy, Inc.
Engine Tested: Caterpillar, G3306 TA, Unit #805637
Engine Serial #: R6S02346

Date: November 17, 2014
Location: Hart 1-03H

Stack Gas Flow Rate: Method 19

Test #	Brake Horsepower	O_2 Conc. (%)	Fuel Heating [HHV] Value (Btu/SCF)	F Factor-Dry Oxy. (DSCFex/MMBtu)	Fuel Flow (SCF/hr)	Stack Flow (SCF/hr)
1	127	0.00	1,316	8,741.46	1,140	13,111
2	127	0.00	1,316	8,741.46	1,134	13,042
3	127	0.00	1,316	8,741.46	1,146	13,180
Average	**127**	**0.00**	**1,316**	**8,741.46**	**1,140**	**13,111**

NOx Mass Emission Rate

Test #	Brake Horsepower	NOx Conc. (ppmvd)	MW	E (g/hp*hr)	E (lb/hr)
1	127	26.17	46.01	0.15	0.04
2	127	27.18	46.01	0.15	0.04
3	127	28.45	46.01	0.16	0.04
Average	**127**	**27.27**	**46.01**	**0.15**	**0.04**

NOx @15%O_2 Concentration

Test #	Brake Horsepower	NOx Conc. (ppmvd)	NOx @15%O_2 (ppmvd)
1	127	26.17	7.39
2	127	27.18	7.67
3	127	28.45	8.03
Average	**127**	**27.27**	**7.70**

CO Mass Emission Rate

Test #	Brake Horsepower	CO Conc. (ppmvd)	MW	E (g/hp*hr)	E (lb/hr)
1	127	201.28	28.00	0.69	0.19
2	127	222.27	28.00	0.75	0.21
3	127	249.50	28.00	0.85	0.24
Average	**127**	**224.35**	**28.00**	**0.76**	**0.21**

CO @15%O_2 Concentration

Test #	Brake Horsepower	CO Conc. (ppmvd)	CO @15%O_2 (ppmvd)
1	127	201.28	56.82
2	127	222.27	62.75
3	127	249.50	70.43
Average	**127**	**224.35**	**63.33**

VOC Mass Emission Rate

Test #	Brake Horsepower	VOC Conc. (ppmvd)	MW	E (g/hp*hr)	E (lb/hr)
1	127	0.06	44.00	0.00	0.00
2	127	1.43	44.00	0.01	0.00
3	127	0.01	44.00	0.00	0.00
Average	**127**	**0.50**	**44.00**	**0.00**	**0.00**

VOC @15%O_2 Concentration

Test #	Brake Horsepower	VOC Conc. (ppmvd)	VOC @15%O_2 (ppmvd)
1	127	0.06	0.02
2	127	1.43	0.40
3	127	0.01	0.00
Average	**127**	**0.50**	**0.14**

Calculations, Formulas, and Constants

The following information supports the spreadsheets for this testing project.

Given Data:

Ideal Gas Conversion Factor = 385.23 SCF/lb-mol at 68 deg F & 14.696 psia

Fuel Heating Value is based upon Air Hygiene's fuel gas calculation sheet. All calculations are based upon a correction to 68 deg F & 14.696 psia

High Heating Values (HHV) are used for the Fuel Heating Value, F-Factor, and Fuel Flow Data per EPA requirements.

ASTM D 3588

Molecular Weight of NOx (lb/lb-mole) = 46.01
Molecular Weight of CO (lb/lb-mole) = 28.00
Molecular Weight of SO_2 (lb/lb-mole) = 64.00
Molecular Weight of THC (propane) (lb/lb-mole) = 44.00
Molecular Weight of VOC (methane) (lb/lb-mole) = 16.00
Molecular Weight of NH_3 (lb/lb-mole) = 17.03
Molecular Weight of HCHO (lb/lb-mole) = 30.03

40CFR60, App. A., RM 19, Table 19-1

Conversion Constant for NOx = 0.0000001194351
Conversion Constant for CO = 0.0000000726839
Conversion Constant for SO_2 = 0.0000001661345
Conversion Constant for THC = 0.0000001142175
Conversion Constant for VOC (methane) = 0.0000000415336
Conversion Constant for NH_3 = 0.0000000442074
Conversion Constant for HCHO = 0.0000000779534
NOTE: units are lb/ppm*ft^3

Formulas:

1. Corrected Raw Average (C_{Gas}), 40CFR60, App. A, RM 7E, Eq. 7E-5 (08/15/06)

$$C_{Gas} = \left(C_{Avg} - C_O\right) \times \left(\frac{C_M}{C_M - C_O}\right)$$

2. Correction to % O_2, 40CFR60, App. A, RM 20, Eq. 20-5 (11/26/02)

$$C_{adj} = C_{Gas(Target)} \times \left(\frac{20.9\% - AdjFactor}{20.9\% - C_{Gas(O2)}}\right)$$

3. Correction to % O_2 and ISO Conditions

$$C_{ISO} = C_{Adj} \times \sqrt{\frac{P_r}{P_o}} \times e^{(19 \times (H_O - 0.00633))} \times \left(\frac{288}{T_a}\right)^{1.53}$$

4. Method 19 stack exhaust flow (scfh)

$$Q_s = \left(\frac{FFactor \times Q_f \times HHV}{1{,}000{,}000}\right) \times \left(\frac{20.9\%}{20.9\% - C_{Gas(O2)}}\right)$$

5. Emission Rate in lb/hr

$$E_{lb/hr} = \frac{C_{Gas}}{10^6} \times \frac{Q_S \times MW}{G}$$

6. Emission Rate in tons per year

$$E_{ton/yr} = \frac{E_{lb/hr} \times hr_{year}}{2000}$$

7. Emission Concentration in lb/MMBtu (O_2 based)

$$E_{lb/MMBtu} = \frac{C_{Gas} \times F_d Factor \times Conv_C \times 20.9\%}{20.9\% - C_{Gas(O2)}}$$

8. Emission Concentration in g/hp*hr

$$E_{g/hp \cdot hr} = \frac{E_{lb/hr} \times 453.6}{mw \times 1341.022} \; or \; \frac{E_{lb/hr} \times 453.6}{hp}$$

EXAMPLE CALCULATIONS (FFACTOR)

RM 19, (02-27-14), 2.0 Summary of Method, 2.1 Emission Rates. Oxygen (O_2) or carbon dioxide (CO_2) concentrations and appropriate F factors (ratios of combustion gas volumes to heat inputs) are used to calculate pollutant emission rates from pollutant concentrations.

RM 19, (02-27-14), 12.2 Emission Rates of PM, SO_2, and NOx. Select from the following sections the applicable procedure to compute the PM, SO_2, or NOx emission rate (E) in lb/MMBtu. The pollutant concentration must be in lb/scf and the F factor must be in scf/MMBtu. If the pollutant concentration (C) is not in the appropriate units, use Table 19–1 in Section 17.0 to make the proper conversion. An F factor is the ratio of the gas volume of the products of combustion to the heat content of the fuel. The dry F factor (F_d) includes all components of combustion less water, the wet F factor (F_w) includes all components of combustion, and the carbon F factor (F_c) includes only carbon dioxide.

Mark's Std Hdbk, 10th ed.,pg 4-26
High Heat Value Dry (HHV_{dry}), calc for Methane (single component for the fuel gas)

$$HHV_{dry}(Btu/SCF) = \left[\left(\frac{M_{\%}}{100}\right) \times GCM\right]$$

$$HHV_{dry} = \frac{70.58\ \%}{100.00} \times \frac{994.85\ Btu}{SCF} = \frac{702.12\ \ Btu}{SCF}$$

Mark's Std Hdbk, 10th ed., pg 4-26
Low Heat Value Dry (LHV_{dry}), calc for Methane (single component for the fuel gas)

$$LHV_{dry}(Btu/SCF) = \left[\left(\frac{M_{\%}}{100}\right) \times NCM\right]$$

$$LHV_{dry} = \frac{70.58\ \%}{100.00} \times \frac{895.75\ Btu}{SCF} = \frac{632.19\ \ Btu}{SCF}$$

Civil Eng. Ref. Man.,7th Ed.,pg 14-9/GPA Ref. Bulletin 181-86, App. C
High Heat Value Wet (HHV_{wet}), calc for entire sample (all components of the fuel gas)

$$HHV_{wet}(Btu/SCF) = \frac{HHV_{dry}}{W/D.factor}$$

$$HHV_{wet} = \frac{1{,}315.68\ Btu/SCF}{1.0236} = 1{,}285.34\ Btu/SCF$$

Civil Eng. Ref. Man.,7th Ed.,pg 14-9/GPA Ref. Bulletin 181-86, App. C
Low Heat Value Wet (LHV_{wet}), calc for entire sample (all components of the fuel gas)

$$LHV_{wet}(Btu/SCF) = \frac{LHV_{dry}}{W/D.factor}$$

$$LHV_{wet} = \frac{1{,}196.01\ Btu/SCF}{1.0236} = 1{,}168.44\ Btu/SCF$$

Lbs Component per Lb-Mol of Gas (CM), calc for Methane (single component for the fuel gas)

$$CM(lb/lb-mol) = \left[\left(\frac{M_{\%}}{100}\right) \times MW\right]$$

$$CM = \frac{70.58\ \%}{100.00} \times \frac{16.04\ \ lb}{lb\text{-}mol} = 11.32\ lb/lb\text{-}mol$$

ASTM D 3588
Fuel Molecular Weight (MW_{Fuel})

$$MW_{Fuel}(lb/lb\text{-}mol) = \left[\sum (CM)\right]$$

MW_{Fuel} = 11.32 lb/lb-mol
+ 4.12 lb/lb-mol
+ etc. = 23.067 lb/lb-mol

Btu per Lb of Gas Gross (**GCV**)

$$GCV(Btu/lb) = \left[\frac{HHV_{dry} \times G}{MW_{Fuel}}\right]$$

$$GCV = \frac{1{,}315.68\ Btu/SCF \times 385.23\ ft^3/lbmol}{23.067\ lb/lb\text{-}mol} = 21{,}972.90\ Btu/lb$$

ASTM D 3588 (SG)
Specific Gravity

$$SG = \left[\frac{MW_{Fuel}}{MW_{AIR}}\right]$$

$$SG = \frac{23.07\ lb/lb\text{-}mol}{28.96\ lb/lb\text{-}mol} = 0.7964$$

Btu per Lb of Gas Net (**NCV**)

$$NCV(Btu/lb) = \left[\frac{LHV_{dry} \times G}{MW_{Fuel}}\right]$$

$$NCV = \frac{1{,}196.01\ Btu/SCF \times 385.23\ ft^3/lbmol}{23.067\ lb/lb\text{-}mol} = 19{,}974.45\ Btu/lb$$

Weight Percent of Component ($C_{\%}$), methane

$$C_{\%}(\%) = \left[\left(\frac{CM}{MW_{Fuel}}\right) \times 100\right]$$

$$C_{\%} = \frac{11.32\ lb/lb\text{-}mol}{23.07\ lb/lb\text{-}mol} \times 100 = 49.09\ \%$$

Weight Percent of Volatile Organic Compounds ($VOC_{\%}$)

$$VOC_{\%}(\%) = \left[\sum_{C_3H_8}^{C_8H_{18}} M_{\%}\right]$$

$VOC_{\%}$ = 15.66 % + 1.74 % + 6.43 % + etc. = 29.21 %

RM 19, (02-27-14), 12.3.2 Determined **F Factors**. If the fuel burned is not listed in Table 19–2 or if the owner or operator chooses to determine an F factor rather than use the values in Table 19–2, use the procedure below: 12.3.2.1 Equations. Use the eq

RM 19, (02-27-14), 12.1 Nomenclature

K (scf/lb)/%

H	3.64
C	1.53
S	0.57
N_2	0.14
O_2	0.46

$$F_d = \frac{K(K_{hd}\%H + K_c\%C + K_s\%S + K_n\%N - K_o\%O)}{GCV} \qquad \text{Eq. 19-13}$$

$$F_d = \frac{10^6 Btu}{MMBtu} \times \left[\frac{3.64\ SCF}{lb \cdot \%} \times 21.10\ \% + \frac{1.53\ SCF}{lb \cdot \%} \times 75.50\ \% + \frac{0.57\ SCF}{lb \cdot \%} \times 0.00\ \% + \frac{0.14\ SCF}{lb \cdot \%} \times 2.18\ \% - \frac{0.46\ SCF}{lb \cdot \%} \times 1.22\ \%\right] \times \frac{lb}{21{,}972.90\ Btu} = \frac{8{,}741.46\ SCF}{MMBtu}$$

Note: Lack of significant figures may cause rounding errors between actual calculations and example calculations.

EXAMPLE CALCULATIONS (INFORMATION)

Specific Humidity (RH_{sp})

Note: RHsp (gr/lb) calculated using temperature, relative humidity, and barometric pressure with psychrometric chart, psychrometric calculator, or built in psychrometric algorithm.

$$RH_{sp}(lb/lb) = \left[\left(\frac{gr}{lb}\right) \times \frac{lb}{7000\ gr}\right]$$

$$RH_{sp} = \frac{15.42\ gr}{lb} \times \frac{1\ lb}{7000\ gr} = 0.002203 \frac{lb\ H_2O}{lb\ Air}$$

Calculated Stack Gas Moisture Content (B_{ws})

RM 4, (02-27-14), 16.4 Using F-factors to determine moisture is an acceptable alternative to Method 4 for a combustion stack not using a scrubber. If this option is selected, calculate the moisture content as follows: [with corrected equations from the Final Rule: Revisions to Test Methods and Testing Regulations]

$$B_{ws}(\%) = B_H(\%) + B_A(\%) + B_F(\%)$$

B_{WS} = 17.91 % + 0.35 % + 0.15 % = 18.41 %

$$B_{ws}(\%) = \left[\left(1 - \frac{F_d}{F_w}\right)\left(\frac{20.9 - O_2}{20.9}\right)\right] + \left[\left(\frac{\%RH}{100 \times P_{Bar}}\right) \times 10^{\left\{6.6912 - \left(\frac{3144}{T + 390.86}\right)\right\}}\right] + \left[\left(\frac{0.0036 \times \left\{2.36 \times \frac{18.015}{MW_{Gas}}\right\}^2 + 0.075 \times \left\{2.36 \times \frac{18.015}{MW_{Gas}}\right\}}{100}\right)\left(\frac{20.9 - O_2}{20.9}\right)\right]$$

B_H = mole fraction of moisture from the hydrogen in fuel

$$B_H(\%) = \left\{1 - \frac{8710.0}{10610.0}\right\}\left\{\frac{20.9 - 0.00}{20.9}\right\} = 17.91\ \%$$

W (%, by weight) = 2.36 mol% x $\frac{18.015}{23.067}$ = 1.8432 %

2.36 mol% = %H_2O (mol%) at EPA Standard Conditions (68°F and 14.696psia); MW_{water} = 18.015 lb/lb-mol

B_A = mole faction of moisture in the ambient air

$$B_A(\%) = \frac{49}{100 \times 29.41} \times 10^{\left\{6.6912 - \frac{3144}{36 + 390.86}\right\}} = 0.35\ \%$$

B_F = mole faction of moisture from free water in the fuel

$$B_F(\%) = \left\{\frac{0.0036 \times 1.8432^2 + 0.075 \times 1.8432}{100}\right\}\left\{\frac{20.9 - 0.00}{20.9}\right\} = 0.15\ \%$$

EXAMPLE CALCULATIONS (CALIBRATION)

Analyzer Calibration Error

RM 7E, (02-27-14), 12.2 Analyzer Calibration Error. For non-dilution systems, use Equation 7E-1 to calculate the analyzer calibration error for the low-, mid-, and high-level calibration gases. (calc for NOx analyzer mid gas, if applicable)

$$ACE = \left(\frac{C_{Dir} - C_V}{CS}\right) \times 100 \qquad \text{Eq. 7E-1}$$

$$ACE = \frac{57.94\ ppm - 60.00\ ppm}{125.00\ ppm} \times 100 = -1.65\ \%$$

Calibration Error and Estimated Point, RM 25A, THC/VOC Analyzer

RM 25A, (02-27-14), 8.4 Calibration Error Test. Immediately prior to the test series (within 2 hours of the start of the test), introduce zero gas and high-level calibration gas at the calibration valve assembly. Adjust the analyzer output to the appropriate levels, if necessary. Calculate the predicted response for the low-level and mid-level gases based on a linear response line between the zero and high-level response. Then introduce low-level and mid-level calibration gases successively to the measurement system. ... These differences must be less than 5 percent of the respective calibration gas value. (calc for THC/VOC analyzer mid gas, if applicable)

$$E_P = \frac{C_{Dir(H)} - C_{Dir(Z)}}{C_{V(H)} - C_{V(Z)}} \times C_{Dir(M)} + C_{Dir(Z)}$$

Eq. of a line
y=mx+b

$$E_p = \frac{100.34\ ppm - -0.02\ ppm}{100.00\ ppm - 0.00\ ppm} \times 65.00\ ppm + -0.02 = 65.21\ ppm$$

$$ACE = \left(\frac{C_{Dir} - C_V}{CS}\right) \times 100 \qquad \text{Eq. 7E-1}$$

$$ACE_{voc} = \frac{65.40\ ppm - 65.21\ ppm}{65.00\ ppm} \times 100 = 0.29\ \%$$

Note: Lack of significant figures may cause rounding errors between actual calculations and example calculations.

EXAMPLE CALCULATIONS (BIAS, DRIFT, AND CORRECTED RAW AVERAGE)

System Bias

RM 7E, (02-27-14), 12.3 System Bias. For non-dilution systems, use Equation 7E-2 to calculate the system bias separately for the low-level and upscale calibration gases. (calc for NOx analyzer upscale gas, Run 1 initial bias, if applicable)

$$SB = \left(\frac{C_S - C_{Dir}}{CS}\right) \times 100$$ Eq. 7E-2

$$SB = \frac{59.96 \text{ ppm} - 57.94 \text{ ppm}}{125.00 \text{ ppm}} \times 100 = 1.62 \ \%$$

Drift Assessment

RM 7E, (02-27-14), 12.5 Drift Assessment. Use Equation 7E-4 to separately calculate the low-level and upscale drift over each test run. (calc for NOx analyzer upscale drift, Run 1, if applicable)

$$D = \left|SB_{final} - SB_i\right|$$ Eq. 7E-4

$$D = |\ 1.78\ \% - 1.62\ \%\ | = 0.17\ \%$$

Bias Adjusted Average

RM 7E, (02-27-14), 12.6 Effluent Gas Concentration. For each test run, calculate Cavg, the arithmetic average of all valid NOx concentration values (e.g., 1-minute averages). Then adjust the value of Cavg for bias, using Equation 7E-5b. (calc for NOx analyzer, Run 1, if applicable)

$$C_{Gas} = \left(C_{Avg} - C_O\right) \times \left(\frac{C_{Ma}}{C_M - C_O}\right)$$ Eq. 7E-5b

$$C_{Gas} = \left(26.36 \text{ ppm} - 0.29 \text{ ppm}\right) \times \left(\frac{60.00 \text{ ppm}}{60.07 \text{ ppm} - 0.29 \text{ ppm}}\right) = 26.17 \text{ ppm}$$

EXAMPLE CALCULATIONS (Brake Horsepower)

Brake Horsepower (bhp)

$BHP = hp_a \times Load$

BHP = 127 hp

Available Horsepower (hp_a)

$$hp_a = \text{Rated Horsepower} \times \frac{\text{actual rpm}}{\text{rated rpm}}$$

$$hp_a = 203 \text{ hp} \times \frac{1{,}407 \text{ rpm}}{1{,}800 \text{ rpm}} = 159 \text{ hp}$$

Load (%)

$$\text{Load (\%)} = \frac{\text{Brake Horsepower (bhp)}}{\text{Available Horsepower (hpa)}}$$

$$\text{Load} = \frac{127 \text{ BHP}}{159 \text{ hpa}} = 80 \ \%$$

Note: Lack of significant figures may cause rounding errors between actual calculations and example calculations.

EXAMPLE CALCULATIONS (BSFC)

Using LHV with Q_f (SCFH)

$$BSFC(Btu/hp \cdot hr) = \frac{LHV \times Q_f}{bhp}$$

$$BSFC = \frac{1{,}196\ Btu}{SCF} \times \frac{1{,}140\ SCF}{hr} \times \frac{1}{127\ hp} = \frac{10{,}736\ Btu}{hp*hr}$$

EXAMPLE CALCULATIONS (RUNS)

Stack Exhaust Flow (Q_S) - RM19

$$Q_S = \left(\frac{FFactor \times Q_f \times HHV}{1{,}000{,}000}\right) \times \left(\frac{20.9\%}{20.9\% - C_{Gas(O2)}}\right)$$

$$Q_S = \frac{8{,}741.46\ SCF}{MMBtu} \times \frac{1{,}140.00\ SCF}{hr} \times \frac{1{,}315.68\ Btu}{SCF} \times \frac{MMBtu}{10^6\ Btu} \times \left(\frac{20.90\%}{20.9\% - 0.0\ \%}\right) = 13{,}111.06\ SCFH$$

Moisture Correction

RM 7E, (02-27-14), 12.10 Moisture Correction. Use Equation 7E-10 if your measurements need to be corrected to a dry basis. (calc for NOx analyzer, Run 1, if applicable) Note: Calculations may not match as Run 1 results are typically also bias adjusted

$$C_W = C_D \times (1 - B_{WS})$$

$$C_D = \frac{C_W}{1 - B_{WS}}$$ Eq. 7E-10 $$C_D = \frac{21.35\ ppmvw}{1 - 0.18} = 26.17\ ppmvd$$ or inversely, $$C_W = 26.17\ ppmvd \times \left(1 - 0.18\right) = 21.35\ ppmvw$$

Diluent-Corrected Pollutant Concentration, O_2 Based

RM 20, (11-26-02), 7.3.1 Correction of Pollutant Concentration Using O_2 Concentration. Calculate the O_2 corrected pollutant concentration, as follows: (calc for NOx gas, Run 1, if applicable) [now contained in applicable Subpart]

$$C_{adj} = C_{Gas(Target)} \times \left(\frac{20.9\% - AdjFactor}{20.9\% - C_{Gas(O2)}}\right)$$ Eq. 20-4 $$C_{adj} = 26.17\ ppm \times \left(\frac{20.9\% - 15.00\ \%}{20.9\% - 0.00\ \%}\right) = 7.39\ ppm@15\%O_2$$

EXAMPLE CALCULATIONS (RUNS)

Emissions Rate (g/hp-hr)

Calculation for grams per horsepower-hour. Calculate, as follows: (calc for NOx gas Run 1, if applicable)

$$E_{g/hp\text{-}hr} = \frac{E_{lb/hr} \times 453.6}{mw \times 1341.022}\ or\ \frac{E_{lb/hr} \times 453.6}{hp}$$

$$E_{g/hp\text{-}hr} = \frac{0.04\ lb}{hr} \times \frac{453.6\ g}{lb} \times \frac{1}{127\ hp} = \frac{0.15\ g}{hp*hr}$$

Note: Lack of significant figures may cause rounding errors between actual calculations and example calculations.

RM 7E, (08-15-06), 12.1 Nomenclature. The terms used in the equations are defined as follows:

ACE = Analyzer calibration error, percent of calibration span.
B_{WS} = Moisture content of sample gas as measured by Method 4 or other approved method, percent/100.
C_{Avg} = Average unadjusted gas concentration indicated by data recorder for the test run.
C_D = Pollutant concentration adjusted to dry conditions.
C_{Dir} = Measured concentration of a calibration gas (low, mid, or high) when introduced in direct calibration mode.
C_{Gas} = Average effluent gas concentration adjusted for bias.
C_M = Average of initial and final system calibration bias (or 2-point system calibration error) check responses for the upscale calibration gas.
C_{MA} = Actual concentration of the upscale calibration gas, ppmv.
C_O = Average of the initial and final system calibration bias (or 2-point system calibration error) check responses from the low-level (or zero) calibration gas.
C_S = Measured concentration of a calibration gas (low, mid, or high) when introduced in system calibration mode.
C_{SS} = Concentration of NOx measured in the spiked sample.
C_{Spike} = Concentration of NOx in the undiluted spike gas.
C_{Calc} = Calculated concentration of NOx in the spike gas diluted in the sample.
C_V = Manufacturer certified concentration of a calibration gas (low, mid, or high).
C_W = Pollutant concentration measured under moist sample conditions, wet basis.
CS = Calibration span.
D = Drift assessment, percent of calibration span.
E_p = The predicted response for the low-level and mid-level gases based on a linear response line between the zero and high-level response.
Eff_{NO2} = NO_2 to NO converter efficiency, percent.
H = High calibration gas, designator.
L = Low calibration gas, designator.
M = Mid calibration gas, designator.
NOFinal = The average NO concentration observed with the analyzer in the NO mode during the converter efficiency test in Section 16.2.2.
NOxCorr = The NOx concentration corrected for the converter efficiency.
NOxFinal = The final NOx concentration observed during the converter efficiency test in Section 16.2.2.
NOxPeak = The highest NOx concentration observed during the converter efficiency test in Section 16.2.2.
Q_{Spike} = Flow rate of spike gas introduced in system calibration mode, L/min.
Q_{Total} = Total sample flow rate during the spike test, L/min.
R = Spike recovery, percent.
SB = System bias, percent of calibration span.
SB_i = Pre-run system bias, percent of calibration span.
SB_f = Post-run system bias, percent of calibration span.
SB / D_{Alt} = Alternative absolute difference criteria to pass bias and/or drift checks.
SCE = System calibration error, percent of calibration span.
SCE_i = Pre-run system calibration error, percent of calibration span.
SCE_{final} = Post-run system calibration error, percent of calibration span.
Z = Zero calibration gas, designator.

40CFR60.355(b)(1), (09-20-06), Nomenclature. The terms used in the equations are defined as follows:

P_r = reference combustor inlet absolute pressure at 101.3 kilopascals ambient pressure, mm Hg
P_o = observed combustor inlet absolute pressure at test, mm Hg
H_o = observed humidity of ambient air, g H_2O/g air
e = transcendental constant, 2.718
T_a = ambient temperature, K

Small Engine and FTIR Nomenclature. The terms used in the equations are defined as follows:

bhp = brake horsepower
hp = horsepower
Q_{sys} = system flow (lpm)
Q_m = matrix spike flow (lpm)

RM 19, (07-29-06), 12.1 Nomenclature. The terms used in the equations are defined as follows:

AdjFactor = Percent oxygen or carbon dioxide adjustment applied to a target pollutant
B_{wa} = Moisture fraction of ambient air, percent.
Btu = British thermal unit
$\%_C$ = Concentration of carbon from an ultimate analysis of fuel, weight percent.
$\%_{CO2d}$, $\%_{CO2w}$ = Concentration of carbon dioxide on a dry and wet basis, respectively, percent.
CIP / CDP = Combustor inlet pressure / compressor discharge pressure (mm Hg); note, some manufactures reference as PCD.
E = Pollutant emission rate, ng/J (lb/million Btu).
E_a = Average pollutant rate for the specified performance test period, ng/J (lb/million Btu).
E_{ao}, E_{ai} = Average pollutant rate of the control device, outlet and inlet, respectively, for the performance test period, ng/J (lb/million Btu).
E_{bi} = Pollutant rate from the steam generating unit, ng/J (lb/million Btu).
E_{bo} = Pollutant emission rate from the steam generating unit, ng/J (lb/million Btu).
E_{ci} = Pollutant rate in combined effluent, ng/J (lb/million Btu).
E_{co} = Pollutant emission rate in combined effluent, ng/J (lb/million Btu).
E_d = Average pollutant rate for each sampling period (e.g.,24-hr Method 6B sample or 24-hr fuel sample) or for each fuel lot (e.g., amount of fuel bunkered), ng/J (lb/million Btu)
E_{di} = Average inlet SO_2 rate for each sampling period d, ng/J (lb/million Btu).
E_g = Pollutant rate from gas turbine, ng/J (lb/million Btu).
E_{ga} = Daily geometric average pollutant rate, ng/J (lbs/million Btu) or ppm corrected to 7 percent O_2.
E_{jo},E_{ji} = Matched pair hourly arithmetic average pollutant rate, outlet and inlet, respectively, ng/J (lb/million Btu) or ppm corrected to 7 percent O_2.
E_h = Hourly average pollutant, ng/J (lb/million Btu).
E_{hj} = Hourly arithmetic average pollutant rate for hour "j," ng/J (lb/million Btu) or ppm corrected to 7 percent O_2.
EXP = Natural logarithmic base (2.718) raised to the value enclosed by brackets.
Fc = Ratio of the volume of carbon dioxide produced to the gross calorific value of the fuel from Method 19
F_d, F_w, F_c = Volumes of combustion components per unit of heat content, scm/J (scf/million Btu).
ft^3 = cubic feet
G = ideal gas conversion factor
(385.23 SCF/lb-mol at 68 deg F & 14.696 psia)
GCM = gross Btu per SCF (constant, compound based)
GCV = Gross calorific value of the fuel consistent with the ultimate analysis, kJ/kg (Btu/lb).
GCV_p, GCV_r = Gross calorific value for the product and raw fuel lots, respectively, dry basis, kJ/kg (Btu/lb).
$\%_H$ = Concentration of hydrogen from an ultimate analysis of fuel, weight percent.
H_b = Heat input rate to the steam generating unit from fuels fired in the steam generating unit, J/hr (million Btu/hr).
H_g = Heat input rate to gas turbine from all fuels fired in the gas turbine, J/hr (million Btu/hr).
$\%_{H2O}$ = Concentration of water from an ultimate analysis of fuel, weight percent.
H_r = Total numbers of hours in the performance test period (e.g., 720 hours for 30-day performance test period).
K = volume of combustion component per pound of component (constant)
K = Conversion factor, 10^{-5} (kJ/J)/(%) [10^6 Btu/million Btu].
K_c = (9.57 scm/kg)/% [(1.53 scf/lb)/%].
K_{co} = (2.0 scm/kg)/% [(0.321 scf/lb)/%].
K_{hd} = (22.7 scm/kg)/% [(3.64 scf/lb)/%].
K_{hw} = (34.74 scm/kg)/% [(5.57 scf/lb)/%].
K_n = (0.86 scm/kg)/% [(0.14 scf/lb)/%].
K_o = (2.85 scm/kg)/% [(0.46 scf/lb)/%].
K_s = (3.54 scm/kg)/% [(0.57 scf/lb)/%].
$K_{subfuel}$ = $2x10^4$ Btu/wt%-MMBtu
K_w = (1.30 scm/kg)/% [(0.21 scf/lb)/%].
lb = pound
ln = Natural log of indicated value.
L_p,L_r = Weight of the product and raw fuel lots, respectively, metric ton (ton).
$\%_N$ = Concentration of nitrogen from an ultimate analysis of fuel, weight percent.
$M_{\%}$ = mole percent
mol = mole
MW = molecular weight (lb/lb-mol)
MW_{AIR} = molecular weight of air (28.9625 lb/lb-mole)[1]
NCM = net Btu per SCF (constant based on compound)
$\%_O$ = Concentration of oxygen from an ultimate analysis of fuel, weight percent.
$\%_{O2d}$, $\%_{O2w}$ = Concentration of oxygen on a dry and wet basis, respectively, percent.
P_B = barometirc pressure, in Hg
P_s = Potential SO2 emissions, percent.
$\%_S$ = Sulfur content of as-fired fuel lot, dry basis, weight percent.
S_e = Standard deviation of the hourly average pollutant rates for each performance test period, ng/J (lb/million Btu).
$\%_{Sf}$ = Concentration of sulfur from an ultimate analysis of fuel, weight percent.
S(wt%) = weight percent of sulfur, per lab analysis by appropriate ASTM standard
S_i = Standard deviation of the hourly average inlet pollutant rates for each performance test period, ng/J (lb/million Btu).
S_o = Standard deviation of the hourly average emission rates for each performance test period, ng/J (lb/million Btu).
$\%S_p$, $\%S_r$ = Sulfur content of the product and raw fuel lots respectively, dry basis, weight percent.
SCF = standard cubic feet
SH = specific humidity, pounds of water per pound of air
$t_{0.95}$ = Values shown in Table 19-3 for the indicated number of data points n.
T_{amb} = ambient temperature, °F
W/D Factor = 1.0236 = conv. at 14.696 psia and
68 deg F (ref. Civil Eng. Ref. Manual, 7th Ed.)
X_{CO2}=CO_2 Correction factor, percent.
X_k = Fraction of total heat input from each type of fuel k.

APPENDIX B

EMISSION DATA RECORDS

XTO Energy, Inc.

Air Permit Number:	2013-2068-NOI
Plant Name or Location:	Hart 1-03H
Date:	November 17, 2014
Project Number:	xto-14-multi.ok-eng#13
Manufacturer & Equipment:	Caterpillar
Model:	G3306 TA
Serial Number:	R6S02346
Unit Number:	805637
Tester(s) / Test Unit(s):	MP/216

		RUN		
	UNITS	**1**	**2**	**3**
Start Time	hh:mm:ss	08:54:03	10:09:33	11:42:03
End Time	hh:mm:ss	09:53:33	11:09:03	12:41:33
Bar. Pressure	in. Hg	29.41	29.41	29.41
Amb. Temp.	°F	36	37	39
Rel. Humidity	%	49	47	45
Spec. Humidity	lb water / lb air	0.002203	0.002198	0.002277
Avg. Stack Temp.	°F	907	907	904
Engine Fuel Flow	SCFM	19.0	18.9	19.1
Engine Fuel Flow	SCFH	1,140	1,134	1,146
Stack Moisture	% Calculated	18.4	18.4	18.4
Brake Horsepower	bhp	127	127	127
Rated Horsepower	hp_r	203	203	203
Rated Engine Speed	rpm	1,800	1,800	1,800
Available Horsepower	hp_a	159	158	157
Engine Load	%	80	80	81
Engine Speed	rpm	1,407	1,403	1,396
Air Manifold Pressure	psia	15.6	15.5	15.6
Air Manifold Temp	°F	83	86	88
Suction Pressure	psi	54	54	53
Discharge Pressure	psi	1,052	1,046	1,050
Operating Hours	hours	1,667		

-Brake horsepower available from engine panel.
-Available horsepower based on the engine speed ratio (actual vs rated), see Engine Spec Sheet, Appendix B.
-Load based on Brake horsepower vs available horsepower.

Comp&RATA&Eng-AHI v6.0: November 7, 2014

XTO Energy, Inc.
November 17, 2014
Caterpillar, G3306 TA, Unit #805637, Serial #R6S02346
Hart 1-03H

Run - 1

Date/Time (mm/dd/yy hh:mm:ss)	Elapsed Time (seconds)	O_2 (%)	NOx (ppmvd)	CO (ppmvd)	VOC (ppmvw)
11/17/14 08:54:03	5100	-0.08	24.08	197.38	-0.16
11/17/14 08:54:33	5130	-0.08	42.49	185.75	-0.22
11/17/14 08:55:03	5160	-0.08	27.43	188.29	-0.23
11/17/14 08:55:33	5190	-0.08	20.67	187.86	-0.13
11/17/14 08:56:03	5220	-0.09	19.66	199.85	-0.14
11/17/14 08:56:33	5250	-0.09	21.92	201.72	-0.08
11/17/14 08:57:03	5280	-0.09	21.93	174.91	-0.08
11/17/14 08:57:33	5310	-0.09	31.67	193.21	-0.22
11/17/14 08:58:03	5340	-0.09	31.34	202.04	-0.23
11/17/14 08:58:33	5370	-0.09	28.67	250.36	-0.20
11/17/14 08:59:03	5400	-0.09	45.00	170.20	-0.22
11/17/14 08:59:33	5430	-0.08	17.60	217.28	-0.22
11/17/14 09:00:03	5460	-0.08	25.66	250.83	-0.21
11/17/14 09:00:33	5490	-0.09	40.95	182.42	-0.04
11/17/14 09:01:03	5520	-0.09	17.94	241.76	-0.04
11/17/14 09:01:33	5550	-0.09	50.98	223.50	-0.05
11/17/14 09:02:03	5580	-0.09	28.71	240.83	-0.03
11/17/14 09:02:33	5610	-0.08	37.16	214.90	-0.11
11/17/14 09:03:03	5640	-0.08	21.54	212.31	-0.17
11/17/14 09:03:33	5670	-0.08	33.06	180.82	0.07
11/17/14 09:04:03	5700	-0.09	20.32	191.38	0.01
11/17/14 09:04:33	5730	-0.09	23.79	207.61	-0.22
11/17/14 09:05:03	5760	-0.09	19.26	247.44	-0.21
11/17/14 09:05:33	5790	-0.09	25.45	199.36	-0.25
11/17/14 09:06:03	5820	-0.09	26.24	250.42	-0.33
11/17/14 09:06:33	5850	-0.09	38.69	199.06	-0.34
11/17/14 09:07:03	5880	-0.09	26.07	205.23	-0.33
11/17/14 09:07:33	5910	-0.08	22.40	207.15	-0.25
11/17/14 09:08:03	5940	-0.09	22.20	224.18	-0.23
11/17/14 09:08:33	5970	-0.08	24.95	216.00	-0.24
11/17/14 09:09:03	6000	-0.11	36.80	205.98	-0.24
11/17/14 09:09:33	6030	-0.08	27.37	196.61	0.10
11/17/14 09:10:03	6060	-0.08	24.14	243.66	0.17
11/17/14 09:10:33	6090	-0.11	32.18	238.89	-0.04
11/17/14 09:11:03	6120	-0.08	28.24	215.30	-0.05
11/17/14 09:11:33	6150	-0.08	42.55	176.85	0.07
11/17/14 09:12:03	6180	-0.08	41.99	168.04	0.14
11/17/14 09:12:33	6210	-0.08	13.01	182.06	-0.07
11/17/14 09:13:03	6240	-0.08	17.94	209.79	-0.12
11/17/14 09:13:33	6270	-0.09	21.98	171.77	-0.04
11/17/14 09:14:03	6300	-0.09	22.40	230.63	-0.04
11/17/14 09:14:33	6330	-0.08	23.51	175.84	-0.23
11/17/14 09:15:03	6360	-0.08	26.81	141.48	-0.26
11/17/14 09:15:33	6390	-0.09	17.79	191.90	-0.07
11/17/14 09:16:03	6420	-0.08	29.88	215.06	-0.08
11/17/14 09:16:33	6450	-0.07	26.37	147.99	-0.22
11/17/14 09:17:03	6480	-0.08	40.80	203.50	-0.19
11/17/14 09:17:33	6510	-0.08	12.80	206.79	-0.23
11/17/14 09:18:03	6540	-0.08	19.74	242.84	-0.18
11/17/14 09:18:33	6570	-0.07	38.89	162.48	-0.26
11/17/14 09:19:03	6600	-0.07	22.46	208.44	-0.29

XTO Energy, Inc.
November 17, 2014
Caterpillar, G3306 TA, Unit #805637, Serial #R6S02346
Hart 1-03H

Run - 1

Date/Time (mm/dd/yy hh:mm:ss)	Elapsed Time (seconds)	O_2 (%)	NOx (ppmvd)	CO (ppmvd)	VOC (ppmvw)
11/17/14 09:19:33	6630	-0.07	17.69	213.26	-0.23
11/17/14 09:20:03	6660	-0.07	20.26	225.80	-0.23
11/17/14 09:20:33	6690	-0.08	22.27	237.85	-0.29
11/17/14 09:21:03	6720	-0.07	20.88	241.20	-0.29
11/17/14 09:21:33	6750	-0.06	66.77	305.81	-0.14
11/17/14 09:22:03	6780	-0.06	29.56	116.47	-0.18
11/17/14 09:22:33	6810	-0.06	15.80	176.93	-0.22
11/17/14 09:23:03	6840	-0.06	19.16	193.87	-0.22
11/17/14 09:23:33	6870	-0.06	13.18	215.14	0.06
11/17/14 09:24:03	6900	-0.06	24.68	197.57	0.09
11/17/14 09:24:33	6930	-0.05	45.57	216.03	-0.05
11/17/14 09:25:03	6960	-0.05	15.25	190.70	-0.05
11/17/14 09:25:33	6990	-0.05	23.26	195.70	0.05
11/17/14 09:26:03	7020	-0.04	16.41	183.29	0.10
11/17/14 09:26:33	7050	-0.04	25.49	197.83	-0.02
11/17/14 09:27:03	7080	-0.04	19.67	183.54	0.00
11/17/14 09:27:33	7110	-0.03	30.27	189.97	-0.31
11/17/14 09:28:03	7140	-0.04	27.95	167.75	-0.29
11/17/14 09:28:33	7170	-0.03	31.21	178.05	0.06
11/17/14 09:29:03	7200	-0.03	29.35	276.52	0.04
11/17/14 09:29:33	7230	-0.03	20.84	208.75	-0.20
11/17/14 09:30:03	7260	-0.02	21.85	168.66	-0.17
11/17/14 09:30:33	7290	-0.02	26.57	188.46	-0.06
11/17/14 09:31:03	7320	-0.03	37.88	193.46	-0.11
11/17/14 09:31:33	7350	-0.02	19.25	206.06	-0.09
11/17/14 09:32:03	7380	-0.02	25.52	232.35	-0.08
11/17/14 09:32:33	7410	-0.02	25.49	180.59	-0.08
11/17/14 09:33:03	7440	-0.03	24.05	193.61	-0.04
11/17/14 09:33:33	7470	-0.02	23.41	200.59	-0.34
11/17/14 09:34:03	7500	-0.01	23.37	181.77	-0.30
11/17/14 09:34:33	7530	-0.01	32.91	178.25	0.00
11/17/14 09:35:03	7560	-0.01	30.73	196.17	-0.01
11/17/14 09:35:33	7590	-0.01	32.60	200.71	-0.19
11/17/14 09:36:03	7620	0.00	24.34	187.66	-0.23
11/17/14 09:36:33	7650	-0.02	31.24	182.68	-0.19
11/17/14 09:37:03	7680	-0.03	34.52	183.01	-0.21
11/17/14 09:37:33	7710	-0.03	13.83	195.36	-0.16
11/17/14 09:38:03	7740	-0.02	14.59	174.02	-0.16
11/17/14 09:38:33	7770	-0.01	28.03	179.06	0.03
11/17/14 09:39:03	7800	0.00	21.61	162.77	-0.04
11/17/14 09:39:33	7830	-0.02	18.02	172.26	-0.26
11/17/14 09:40:03	7860	-0.03	17.75	209.79	-0.23
11/17/14 09:40:33	7890	-0.03	27.68	176.65	0.09
11/17/14 09:41:03	7920	-0.03	38.67	209.14	0.08
11/17/14 09:41:33	7950	-0.03	17.98	184.89	0.11
11/17/14 09:42:03	7980	-0.03	15.75	219.66	0.13
11/17/14 09:42:33	8010	-0.04	30.36	200.01	-0.04
11/17/14 09:43:03	8040	-0.04	24.01	194.18	-0.11
11/17/14 09:43:33	8070	-0.05	39.18	228.91	-0.10
11/17/14 09:44:03	8100	-0.04	16.79	167.00	-0.14
11/17/14 09:44:33	8130	-0.06	32.20	188.63	-0.01

XTO Energy, Inc.
November 17, 2014
Caterpillar, G3306 TA, Unit #805637, Serial #R6S02346
Hart 1-03H

Run - 1

Date/Time (mm/dd/yy hh:mm:ss)	Elapsed Time (seconds)	O_2 (%)	NOx (ppmvd)	CO (ppmvd)	VOC (ppmvw)
11/17/14 09:45:03	8160	-0.05	28.32	217.16	-0.07
11/17/14 09:45:33	8190	-0.04	18.62	181.11	-0.15
11/17/14 09:46:03	8220	-0.03	17.69	253.60	-0.20
11/17/14 09:46:33	8250	-0.04	18.22	245.06	-0.25
11/17/14 09:47:03	8280	-0.03	25.98	212.06	-0.27
11/17/14 09:47:33	8310	-0.03	21.16	185.01	-0.08
11/17/14 09:48:03	8340	-0.04	24.75	249.77	-0.03
11/17/14 09:48:33	8370	-0.03	23.78	218.27	0.00
11/17/14 09:49:03	8400	-0.03	28.85	228.78	-0.04
11/17/14 09:49:33	8430	-0.03	26.90	179.33	0.14
11/17/14 09:50:03	8460	-0.03	24.73	174.53	0.12
11/17/14 09:50:33	8490	-0.02	22.73	203.04	-0.28
11/17/14 09:51:03	8520	-0.03	37.87	211.22	-0.35
11/17/14 09:51:33	8550	-0.02	32.63	219.57	-0.18
11/17/14 09:52:03	8580	-0.01	20.81	214.30	-0.18
11/17/14 09:52:33	8610	-0.01	25.59	227.73	-0.24
11/17/14 09:53:03	8640	0.00	30.87	189.58	-0.27
11/17/14 09:53:33	8670	-0.01	22.45	188.62	-0.27
RAW AVERAGE		**-0.05**	**26.36**	**202.06**	**-0.13**

		O_2	NOx	CO	VOC
	Serial Number:	INST-O2-0012	INST-NX-0012	INST-CO-0016	INST-VC-0002
		(%)	(ppmvd)	(ppmvd)	(ppmvw)
Bias	**Initial Zero**	-0.03	0.31	0.13	-0.10
	Final Zero	0.00	0.26	0.43	-0.32
	Avg. Zero	-0.02	0.29	0.28	-0.21
	Initial UpScale	11.89	59.96	402.08	40.08
	Final UpScale	11.92	60.17	400.48	39.87
	Avg. UpScale	11.91	60.07	401.28	39.98
Upscale Cal Gas		11.90	60.00	400.00	40.00

EMISSIONS DATA	O_2	NOx	CO	VOC
Corrected Raw Average (ppm/% dry basis)	0.00	26.17	201.28	0.06
Corrected Raw Average (ppm/% wet basis)	0.00	21.30	164.17	0.08

XTO Energy, Inc.
November 17, 2014
Caterpillar, G3306 TA, Unit #805637, Serial #R6S02346
Hart 1-03H

Run - 2

Date/Time (mm/dd/yy hh:mm:ss)	Elapsed Time (seconds)	O_2 (%)	NOx (ppmvd)	CO (ppmvd)	VOC (ppmvw)
11/17/14 10:09:33	9630	-0.04	19.57	209.78	1.26
11/17/14 10:10:03	9660	-0.04	26.96	216.49	1.26
11/17/14 10:10:33	9690	-0.03	28.90	222.57	1.45
11/17/14 10:11:03	9720	-0.03	22.35	170.59	1.39
11/17/14 10:11:33	9750	-0.03	42.30	203.35	1.46
11/17/14 10:12:03	9780	-0.03	19.13	160.03	1.47
11/17/14 10:12:33	9810	-0.03	33.51	176.52	1.23
11/17/14 10:13:03	9840	-0.03	27.67	221.19	1.25
11/17/14 10:13:33	9870	-0.04	24.61	198.50	0.79
11/17/14 10:14:03	9900	-0.03	38.86	213.46	0.74
11/17/14 10:14:33	9930	-0.03	21.92	220.35	0.71
11/17/14 10:15:03	9960	-0.04	60.22	207.20	0.68
11/17/14 10:15:33	9990	-0.02	21.43	221.62	0.76
11/17/14 10:16:03	10020	-0.03	25.98	196.78	0.69
11/17/14 10:16:33	10050	-0.03	18.94	231.09	0.89
11/17/14 10:17:03	10080	-0.03	35.27	274.92	0.91
11/17/14 10:17:33	10110	-0.02	40.61	177.23	0.77
11/17/14 10:18:03	10140	-0.02	16.56	141.92	0.74
11/17/14 10:18:33	10170	-0.03	42.76	165.33	0.99
11/17/14 10:19:03	10200	-0.01	27.27	192.74	0.94
11/17/14 10:19:33	10230	-0.01	15.40	290.16	0.89
11/17/14 10:20:03	10260	-0.01	25.87	344.26	0.94
11/17/14 10:20:33	10290	-0.01	28.08	255.39	0.70
11/17/14 10:21:03	10320	-0.02	29.86	218.86	0.73
11/17/14 10:21:33	10350	-0.02	23.88	244.07	2.68
11/17/14 10:22:03	10380	-0.03	25.50	216.04	2.67
11/17/14 10:22:33	10410	-0.02	27.50	215.57	2.68
11/17/14 10:23:03	10440	-0.02	25.05	213.84	2.69
11/17/14 10:23:33	10470	-0.03	21.47	216.36	2.74
11/17/14 10:24:03	10500	-0.02	36.36	203.20	2.76
11/17/14 10:24:33	10530	-0.03	28.33	205.67	2.87
11/17/14 10:25:03	10560	-0.03	32.86	286.73	2.85
11/17/14 10:25:33	10590	-0.03	26.86	273.93	0.93
11/17/14 10:26:03	10620	-0.04	25.32	242.77	0.97
11/17/14 10:26:33	10650	-0.03	20.73	232.52	0.68
11/17/14 10:27:03	10680	-0.03	24.07	263.89	0.74
11/17/14 10:27:33	10710	-0.03	24.98	225.98	0.79
11/17/14 10:28:03	10740	-0.03	27.52	193.89	0.77
11/17/14 10:28:33	10770	-0.03	21.92	237.20	0.93
11/17/14 10:29:03	10800	-0.03	27.10	241.51	0.95
11/17/14 10:29:33	10830	-0.02	17.24	182.51	0.74
11/17/14 10:30:03	10860	-0.03	20.57	206.43	0.71
11/17/14 10:30:33	10890	-0.03	29.20	223.71	0.79
11/17/14 10:31:03	10920	-0.03	26.70	208.73	0.76
11/17/14 10:31:33	10950	-0.03	23.63	169.02	0.78
11/17/14 10:32:03	10980	-0.03	41.63	201.25	0.76
11/17/14 10:32:33	11010	-0.03	16.86	200.55	0.92
11/17/14 10:33:03	11040	-0.03	23.46	216.21	0.92
11/17/14 10:33:33	11070	-0.04	34.27	230.32	0.90
11/17/14 10:34:03	11100	-0.04	15.80	232.54	0.93
11/17/14 10:34:33	11130	-0.03	26.67	278.58	0.75

XTO Energy, Inc.
November 17, 2014
Caterpillar, G3306 TA, Unit #805637, Serial #R6S02346
Hart 1-03H

Run - 2

Date/Time (mm/dd/yy hh:mm:ss)	Elapsed Time (seconds)	O_2 (%)	NOx (ppmvd)	CO (ppmvd)	VOC (ppmvw)
11/17/14 10:35:03	11160	-0.03	23.33	231.19	0.71
11/17/14 10:35:33	11190	-0.03	25.72	195.49	0.98
11/17/14 10:36:03	11220	-0.02	35.72	215.48	0.93
11/17/14 10:36:33	11250	-0.01	26.51	312.21	0.75
11/17/14 10:37:03	11280	-0.02	27.23	222.93	0.72
11/17/14 10:37:33	11310	-0.02	36.81	183.25	1.03
11/17/14 10:38:03	11340	-0.02	19.99	199.88	1.03
11/17/14 10:38:33	11370	-0.02	18.23	238.01	0.96
11/17/14 10:39:03	11400	-0.03	32.15	217.23	0.93
11/17/14 10:39:33	11430	-0.02	30.27	199.88	0.93
11/17/14 10:40:03	11460	-0.02	22.14	171.32	0.92
11/17/14 10:40:33	11490	-0.02	36.67	231.61	0.97
11/17/14 10:41:03	11520	-0.02	16.10	226.67	1.04
11/17/14 10:41:33	11550	-0.02	24.49	196.98	1.49
11/17/14 10:42:03	11580	-0.01	26.54	263.73	1.49
11/17/14 10:42:33	11610	-0.01	24.17	201.26	1.04
11/17/14 10:43:03	11640	-0.01	18.16	244.78	1.04
11/17/14 10:43:33	11670	-0.01	29.23	214.41	1.19
11/17/14 10:44:03	11700	0.00	16.27	233.84	1.27
11/17/14 10:44:33	11730	0.00	34.64	241.94	1.46
11/17/14 10:45:03	11760	0.00	15.93	211.82	1.53
11/17/14 10:45:33	11790	-0.01	32.20	222.10	1.34
11/17/14 10:46:03	11820	0.00	22.86	210.70	1.33
11/17/14 10:46:33	11850	0.00	27.25	284.62	1.43
11/17/14 10:47:03	11880	-0.01	23.59	208.38	1.45
11/17/14 10:47:33	11910	0.01	44.09	200.41	1.47
11/17/14 10:48:03	11940	0.00	28.40	201.00	1.46
11/17/14 10:48:33	11970	0.00	19.08	229.85	1.15
11/17/14 10:49:03	12000	0.00	30.43	203.35	1.10
11/17/14 10:49:33	12030	-0.01	26.44	214.13	0.90
11/17/14 10:50:03	12060	0.00	35.77	225.30	0.93
11/17/14 10:50:33	12090	0.00	17.26	234.26	0.92
11/17/14 10:51:03	12120	-0.01	45.27	203.60	0.93
11/17/14 10:51:33	12150	0.00	19.42	236.25	0.74
11/17/14 10:52:03	12180	0.00	33.30	229.40	0.72
11/17/14 10:52:33	12210	0.00	15.29	182.77	0.77
11/17/14 10:53:03	12240	-0.01	26.78	279.37	0.68
11/17/14 10:53:33	12270	0.00	36.29	180.73	0.25
11/17/14 10:54:03	12300	0.00	17.80	188.99	0.28
11/17/14 10:54:33	12330	0.00	24.29	210.24	0.40
11/17/14 10:55:03	12360	0.00	26.91	216.23	0.45
11/17/14 10:55:33	12390	0.01	26.50	202.02	0.21
11/17/14 10:56:03	12420	0.01	35.50	185.92	0.24
11/17/14 10:56:33	12450	0.01	39.33	197.21	0.32
11/17/14 10:57:03	12480	0.01	21.96	200.63	0.35
11/17/14 10:57:33	12510	0.01	20.75	262.30	0.65
11/17/14 10:58:03	12540	0.00	34.91	268.41	0.66
11/17/14 10:58:33	12570	0.00	17.57	198.71	0.98
11/17/14 10:59:03	12600	0.00	19.59	206.26	0.91
11/17/14 10:59:33	12630	0.00	24.98	213.63	1.02
11/17/14 11:00:03	12660	0.00	32.52	198.19	1.02

XTO Energy, Inc.
November 17, 2014
Caterpillar, G3306 TA, Unit #805637, Serial #R6S02346
Hart 1-03H

Run - 2

Date/Time (mm/dd/yy hh:mm:ss)	Elapsed Time (seconds)	O_2 (%)	NOx (ppmvd)	CO (ppmvd)	VOC (ppmvw)
11/17/14 11:00:33	12690	0.00	35.43	242.71	0.75
11/17/14 11:01:03	12720	0.00	17.94	216.28	0.73
11/17/14 11:01:33	12750	0.00	25.59	244.42	0.45
11/17/14 11:02:03	12780	0.00	20.49	220.32	0.41
11/17/14 11:02:33	12810	0.00	37.94	226.17	0.17
11/17/14 11:03:03	12840	0.00	32.93	198.72	0.24
11/17/14 11:03:33	12870	0.00	23.21	199.55	0.28
11/17/14 11:04:03	12900	0.00	26.51	243.72	0.24
11/17/14 11:04:33	12930	0.00	31.12	251.11	0.44
11/17/14 11:05:03	12960	0.00	40.58	275.98	0.43
11/17/14 11:05:33	12990	0.00	21.09	220.07	0.08
11/17/14 11:06:03	13020	-0.02	23.97	221.75	-0.01
11/17/14 11:06:33	13050	-0.01	35.52	276.34	-0.13
11/17/14 11:07:03	13080	-0.01	34.83	347.30	-0.19
11/17/14 11:07:33	13110	-0.01	41.64	157.26	-0.22
11/17/14 11:08:03	13140	-0.02	14.11	125.03	-0.29
11/17/14 11:08:33	13170	-0.01	12.87	237.79	-0.09
11/17/14 11:09:03	13200	-0.01	23.17	321.56	0.00
RAW AVERAGE		**-0.02**	**27.13**	**221.40**	**0.93**

		O_2	NOx	CO	VOC
	Serial Number:	INST-O2-0012	INST-NX-0012	INST-CO-0016	INST-VC-0002
		(%)	(ppmvd)	(ppmvd)	(ppmvw)
Bias	**Initial Zero**	0.00	0.26	0.43	-0.32
	Final Zero	0.01	-0.17	0.02	-0.29
	Avg. Zero	0.01	0.05	0.23	-0.31
	Initial UpScale	11.92	60.17	400.48	39.87
	Final UpScale	11.92	59.46	396.04	40.94
	Avg. UpScale	11.92	59.82	398.26	40.41
Upscale Cal Gas		11.90	60.00	400.00	40.00

EMISSIONS DATA	O_2	NOx	CO	VOC
Corrected Raw Average (ppm/% dry basis)	0.00	27.18	222.27	1.43
Corrected Raw Average (ppm/% wet basis)	0.00	22.17	181.31	1.22

XTO Energy, Inc.
November 17, 2014
Caterpillar, G3306 TA, Unit #805637, Serial #R6S02346
Hart 1-03H

Run - 3

Date/Time (mm/dd/yy hh:mm:ss)	Elapsed Time (seconds)	O_2 (%)	NOx (ppmvd)	CO (ppmvd)	VOC (ppmvw)
11/17/14 11:42:03	15180	-0.05	23.21	281.99	-0.02
11/17/14 11:42:33	15210	-0.04	21.98	255.48	-0.12
11/17/14 11:43:03	15240	-0.05	26.87	217.63	-0.15
11/17/14 11:43:33	15270	-0.04	25.49	251.52	0.05
11/17/14 11:44:03	15300	-0.04	48.00	294.30	0.01
11/17/14 11:44:33	15330	-0.04	30.81	288.24	-0.22
11/17/14 11:45:03	15360	-0.04	31.67	294.82	-0.19
11/17/14 11:45:33	15390	-0.04	34.22	251.56	-0.18
11/17/14 11:46:03	15420	-0.05	27.59	257.63	-0.22
11/17/14 11:46:33	15450	-0.05	22.71	238.13	-0.15
11/17/14 11:47:03	15480	-0.05	23.67	227.15	-0.13
11/17/14 11:47:33	15510	-0.06	30.45	173.23	-0.33
11/17/14 11:48:03	15540	-0.06	23.86	303.04	-0.31
11/17/14 11:48:33	15570	-0.06	32.36	249.79	-0.31
11/17/14 11:49:03	15600	-0.05	25.62	194.78	-0.33
11/17/14 11:49:33	15630	-0.05	20.22	190.32	-0.28
11/17/14 11:50:03	15660	-0.05	19.20	251.49	-0.30
11/17/14 11:50:33	15690	-0.04	25.92	266.44	-0.16
11/17/14 11:51:03	15720	-0.04	44.60	236.81	-0.19
11/17/14 11:51:33	15750	-0.04	20.94	200.20	-0.04
11/17/14 11:52:03	15780	-0.04	32.53	246.39	-0.07
11/17/14 11:52:33	15810	-0.04	23.38	261.20	-0.29
11/17/14 11:53:03	15840	-0.04	27.67	289.22	-0.34
11/17/14 11:53:33	15870	-0.03	40.44	241.30	0.17
11/17/14 11:54:03	15900	-0.04	19.68	212.95	0.09
11/17/14 11:54:33	15930	-0.04	22.12	214.77	-0.25
11/17/14 11:55:03	15960	-0.04	46.97	277.52	-0.24
11/17/14 11:55:33	15990	-0.04	27.64	181.77	-0.16
11/17/14 11:56:03	16020	-0.04	22.81	208.75	-0.27
11/17/14 11:56:33	16050	-0.04	29.42	217.22	-0.19
11/17/14 11:57:03	16080	-0.04	34.63	209.23	-0.23
11/17/14 11:57:33	16110	-0.03	16.45	251.42	-0.09
11/17/14 11:58:03	16140	-0.04	22.20	238.16	-0.06
11/17/14 11:58:33	16170	-0.04	22.53	262.05	0.06
11/17/14 11:59:03	16200	-0.04	52.86	217.60	0.07
11/17/14 11:59:33	16230	-0.04	13.94	243.61	0.09
11/17/14 12:00:03	16260	-0.03	36.86	294.95	0.15
11/17/14 12:00:33	16290	-0.04	38.86	193.48	-0.09
11/17/14 12:01:03	16320	-0.04	16.63	275.45	-0.12
11/17/14 12:01:33	16350	-0.05	39.38	334.05	-0.02
11/17/14 12:02:03	16380	-0.05	48.22	349.13	-0.04
11/17/14 12:02:33	16410	-0.05	32.16	270.64	-0.13
11/17/14 12:03:03	16440	-0.04	25.58	240.04	-0.23
11/17/14 12:03:33	16470	-0.04	24.07	230.76	0.09
11/17/14 12:04:03	16500	-0.03	28.31	285.50	0.11
11/17/14 12:04:33	16530	-0.04	26.04	185.75	-0.05
11/17/14 12:05:03	16560	-0.04	30.69	234.88	-0.03
11/17/14 12:05:33	16590	-0.03	27.51	192.14	0.03
11/17/14 12:06:03	16620	-0.04	37.77	279.34	0.10
11/17/14 12:06:33	16650	-0.04	27.17	246.53	-0.02
11/17/14 12:07:03	16680	-0.04	29.07	202.44	-0.02

XTO Energy, Inc.
November 17, 2014
Caterpillar, G3306 TA, Unit #805637, Serial #R6S02346
Hart 1-03H

Run - 3

Date/Time (mm/dd/yy hh:mm:ss)	Elapsed Time (seconds)	O_2 (%)	NOx (ppmvd)	CO (ppmvd)	VOC (ppmvw)
11/17/14 12:07:33	16710	-0.03	30.77	235.15	-0.04
11/17/14 12:08:03	16740	-0.03	25.07	235.70	-0.05
11/17/14 12:08:33	16770	-0.03	34.53	200.04	-0.27
11/17/14 12:09:03	16800	-0.03	29.44	194.66	-0.24
11/17/14 12:09:33	16830	-0.04	24.63	235.45	-0.20
11/17/14 12:10:03	16860	-0.04	23.90	254.76	-0.19
11/17/14 12:10:33	16890	-0.04	34.21	265.59	-0.31
11/17/14 12:11:03	16920	-0.04	16.93	244.12	-0.30
11/17/14 12:11:33	16950	-0.03	23.25	261.66	-0.20
11/17/14 12:12:03	16980	-0.03	45.22	268.29	-0.19
11/17/14 12:12:33	17010	-0.03	16.84	228.79	-0.11
11/17/14 12:13:03	17040	-0.03	34.50	279.87	-0.12
11/17/14 12:13:33	17070	-0.04	31.39	210.54	-0.01
11/17/14 12:14:03	17100	-0.04	26.91	218.84	0.01
11/17/14 12:14:33	17130	-0.04	18.25	247.25	-0.37
11/17/14 12:15:03	17160	-0.04	34.66	273.34	-0.36
11/17/14 12:15:33	17190	-0.03	27.72	251.17	-0.22
11/17/14 12:16:03	17220	-0.03	35.47	260.44	-0.21
11/17/14 12:16:33	17250	-0.03	15.65	206.57	-0.25
11/17/14 12:17:03	17280	-0.03	21.41	294.62	-0.17
11/17/14 12:17:33	17310	-0.04	31.18	251.23	-0.31
11/17/14 12:18:03	17340	-0.04	26.03	289.27	-0.32
11/17/14 12:18:33	17370	-0.03	29.72	218.93	-0.17
11/17/14 12:19:03	17400	-0.03	15.76	323.77	-0.11
11/17/14 12:19:33	17430	-0.04	18.18	295.93	-0.24
11/17/14 12:20:03	17460	-0.03	49.47	290.99	-0.27
11/17/14 12:20:33	17490	-0.03	27.35	249.49	-0.27
11/17/14 12:21:03	17520	-0.03	38.49	253.04	-0.24
11/17/14 12:21:33	17550	-0.03	18.52	295.56	-0.10
11/17/14 12:22:03	17580	-0.03	30.50	301.95	-0.09
11/17/14 12:22:33	17610	-0.03	20.24	276.10	-0.22
11/17/14 12:23:03	17640	-0.03	16.31	249.04	-0.17
11/17/14 12:23:33	17670	-0.03	24.70	225.48	-0.15
11/17/14 12:24:03	17700	-0.03	21.04	218.60	-0.13
11/17/14 12:24:33	17730	-0.03	26.95	231.32	-0.20
11/17/14 12:25:03	17760	-0.03	31.46	251.14	-0.14
11/17/14 12:25:33	17790	-0.03	24.80	219.28	-0.02
11/17/14 12:26:03	17820	-0.03	30.85	284.56	-0.06
11/17/14 12:26:33	17850	-0.03	29.63	282.57	0.01
11/17/14 12:27:03	17880	-0.03	32.28	251.21	0.06
11/17/14 12:27:33	17910	-0.04	18.43	254.36	0.01
11/17/14 12:28:03	17940	-0.03	26.83	255.95	-0.05
11/17/14 12:28:33	17970	-0.03	21.92	214.81	-0.27
11/17/14 12:29:03	18000	-0.04	17.72	250.38	-0.32
11/17/14 12:29:33	18030	-0.03	20.12	285.40	-0.22
11/17/14 12:30:03	18060	-0.03	45.26	271.38	-0.21
11/17/14 12:30:33	18090	-0.03	15.36	208.99	0.00
11/17/14 12:31:03	18120	-0.04	22.27	246.85	-0.05
11/17/14 12:31:33	18150	-0.03	36.01	238.77	-0.11
11/17/14 12:32:03	18180	-0.03	24.93	260.87	-0.16
11/17/14 12:32:33	18210	-0.03	21.23	328.87	0.00

XTO Energy, Inc.
November 17, 2014
Caterpillar, G3306 TA, Unit #805637, Serial #R6S02346
Hart 1-03H

Run - 3

Date/Time (mm/dd/yy hh:mm:ss)	Elapsed Time (seconds)	O_2 (%)	NOx (ppmvd)	CO (ppmvd)	VOC (ppmvw)
11/17/14 12:33:03	18240	-0.03	38.05	284.56	-0.02
11/17/14 12:33:33	18270	-0.04	14.32	245.67	-0.23
11/17/14 12:34:03	18300	-0.03	31.12	269.72	-0.29
11/17/14 12:34:33	18330	-0.03	26.24	242.38	0.00
11/17/14 12:35:03	18360	-0.03	26.00	297.78	-0.01
11/17/14 12:35:33	18390	-0.03	18.12	234.53	-0.33
11/17/14 12:36:03	18420	-0.03	25.86	257.13	-0.31
11/17/14 12:36:33	18450	-0.03	22.03	261.20	-0.05
11/17/14 12:37:03	18480	-0.03	12.87	253.35	-0.04
11/17/14 12:37:33	18510	-0.03	20.30	281.08	-0.19
11/17/14 12:38:03	18540	-0.03	24.97	229.29	-0.22
11/17/14 12:38:33	18570	-0.02	27.77	180.21	-0.34
11/17/14 12:39:03	18600	-0.02	26.31	214.52	-0.26
11/17/14 12:39:33	18630	-0.03	41.60	209.54	-0.04
11/17/14 12:40:03	18660	-0.03	42.03	250.16	-0.10
11/17/14 12:40:33	18690	-0.03	24.76	243.23	-0.26
11/17/14 12:41:03	18720	-0.03	55.20	309.45	-0.21
11/17/14 12:41:33	18750	-0.03	28.96	188.32	-0.20
RAW AVERAGE		**-0.04**	**27.95**	**249.23**	**-0.14**

		O_2	NOx	CO	VOC
	Serial Number:	INST-O2-0012	INST-NX-0012	INST-CO-0016	INST-VC-0002
		(%)	(ppmvd)	(ppmvd)	(ppmvw)
Bias	**Initial Zero**	0.01	-0.17	0.02	-0.29
	Final Zero	0.00	-0.20	0.12	-0.07
	Avg. Zero	0.01	-0.19	0.07	-0.18
	Initial UpScale	11.92	59.46	396.04	40.94
	Final UpScale	11.97	58.82	403.02	40.93
	Avg. UpScale	11.95	59.14	399.53	40.94
Upscale Cal Gas		11.90	60.00	400.00	40.00

EMISSIONS DATA	O_2	NOx	CO	VOC
Corrected Raw Average (ppm/% dry basis)	0.00	28.45	249.50	0.01
Corrected Raw Average (ppm/% wet basis)	0.00	23.25	203.52	0.04

G3306 TA

GAS COMPRESSION APPLICATION

GAS ENGINE SITE SPECIFIC TECHNICAL DATA

CATERPILLAR®

ENGINE SPEED (rpm):	1800	FUEL SYSTEM:	HPG IMPCO
COMPRESSION RATIO:	8.0:1		WITH CUSTOMER SUPPLIED AIR FUEL RATIO CONTROL
AFTERCOOLER WATER INLET (°F):	130	**SITE CONDITIONS:**	
JACKET WATER OUTLET (°F):	210	FUEL:	Nat Gas
COOLING SYSTEM:	JW+OC , AC	FUEL PRESSURE RANGE(psig):	12.0-24.9
IGNITION SYSTEM:	MAG	FUEL METHANE NUMBER:	84.8
EXHAUST MANIFOLD:	WC	FUEL LHV (Btu/scf):	905
COMBUSTION:	Catalyst	ALTITUDE(ft):	500
EXHAUST O2 EMISSION LEVEL %:	0.5	MAXIMUM INLET AIR TEMPERATURE(°F):	77
SET POINT TIMING:	35.0	NAMEPLATE RATING:	203 bhp@1800rpm

			MAXIMUM RATING	SITE RATING AT MAXIMUM INLET AIR TEMPERATURE		
RATING	**NOTES**	**LOAD**	**100%**	**100%**	**75%**	**50%**
ENGINE POWER	(1)	bhp	203	203	152	101
INLET AIR TEMPERATURE		°F	77	77	77	77
ENGINE DATA						
FUEL CONSUMPTION (LHV)	(2)	Btu/bhp-hr	8098	8098	8442	9195
FUEL CONSUMPTION (HHV)	(2)	Btu/bhp-hr	8983	8983	9364	10199
AIR FLOW	(3)(4)	lb/hr	1351	1351	1080	788
AIR FLOW WET (77°F, 14.7 psia)	(3)(4)	scfm	305	305	243	178
INLET MANIFOLD PRESSURE	(5)	in Hg(abs)	38.5	38.5	32.3	24.9
EXHAUST STACK TEMPERATURE	(6)	°F	1064	1064	1030	988
EXHAUST GAS FLOW (@ stack temp, 14.5 psia)	(7)(4)	ft3/min	970	970	756	536
EXHAUST GAS MASS FLOW	(7)(4)	lb/hr	1434	1434	1144	835
EMISSIONS DATA						
NOx (as NO2)	(8)	g/bhp-hr	16.57	16.57	16.27	13.78
CO	(8)	g/bhp-hr	16.57	16.57	16.27	13.78
THC (mol. wt. of 15.84)	(8)	g/bhp-hr	1.20	1.20	1.39	1.67
NMHC (mol. wt. of 15.84)	(8)	g/bhp-hr	0.18	0.18	0.21	0.25
NMNEHC (VOCs) (mol. wt. of 15.84)	(8)(9)	g/bhp-hr	0.12	0.12	0.14	0.17
HCHO (Formaldehyde)	(8)	g/bhp-hr	0.25	0.25	0.25	0.25
CO2	(8)	g/bhp-hr	511	511	548	607
EXHAUST OXYGEN	(10)	% DRY	0.5	0.5	0.5	0.5
HEAT REJECTION						
HEAT REJ. TO JACKET WATER (JW)	(11)	Btu/min	9045	9045	7545	6039
HEAT REJ. TO ATMOSPHERE	(11)	Btu/min	1095	1095	856	622
HEAT REJ. TO LUBE OIL (OC)	(11)	Btu/min	1430	1430	1193	955
HEAT REJ. TO AFTERCOOLER (AC)	(11)(12)	Btu/min	515	515	209	31

HEAT EXCHANGER SIZING CRITERIA			
TOTAL JACKET WATER CIRCUIT (JW+OC)	(12)	Btu/min	11666
TOTAL AFTERCOOLER CIRCUIT (AC)	(12)(13)	Btu/min	540
A cooling system safety factor of 0% has been added to the heat exchanger sizing criteria.			

CONDITIONS AND DEFINITIONS

Engine rating obtained and presented in accordance with ISO 3046/1, adjusted for fuel, site altitude and site inlet air temperature.
100% rating at maximum inlet air temperature is the maximum engine capability for the specified fuel at site altitude and maximum site inlet air temperature.
Max. rating is the maximum capability for the specified fuel at site altitude and reduced inlet air temperature.
Lowest load point is the lowest continuous duty operating load allowed. No overload permitted at rating shown.

For notes information consult page three.

PREPARED BY:
Data generated by Gas Engine Rating Pro Version 3.02.00
Ref. Data Set DM5202-03-001, Printed 13Feb2009

Engine Power vs. Inlet Air Temperature

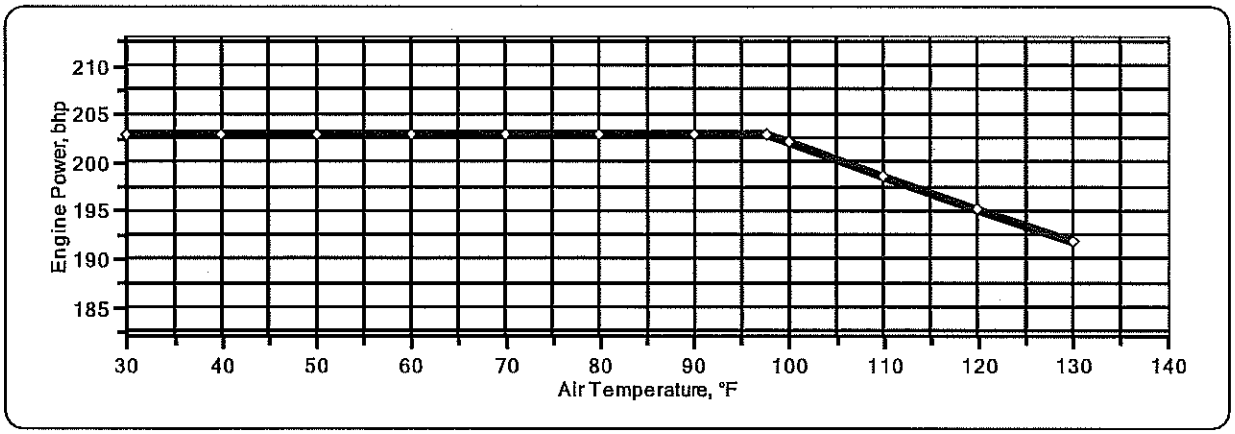

Engine Power vs. Engine Speed

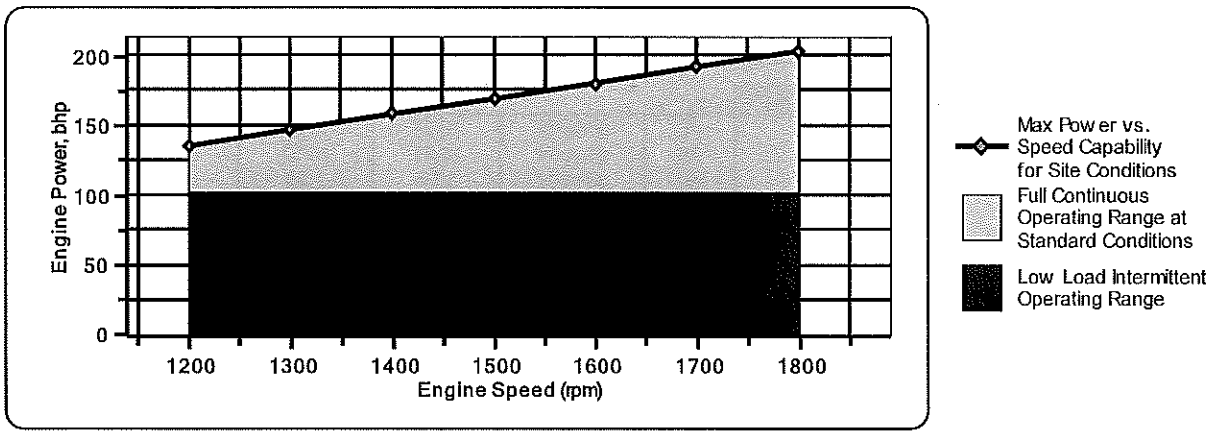

Engine Torque vs. Engine Speed

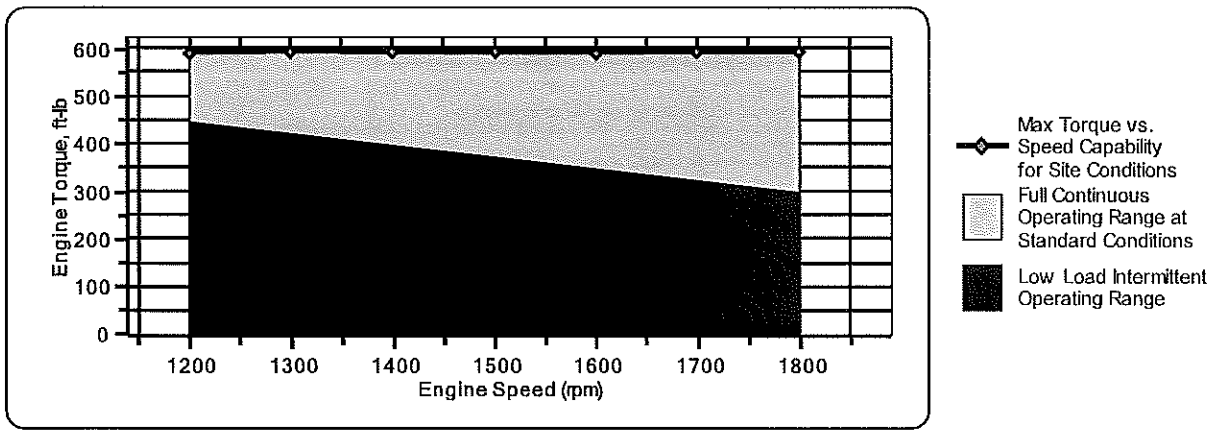

Note: At site conditions of 500 ft and 77°F inlet air temp., constant torque can be maintained down to 1200 rpm.

APPENDIX C

CALIBRATION GAS CERTIFICATIONS

CERTIFICATE OF BATCH/LOT ANALYSIS

Serial #: ALM043721

Product: Nitrogen Grade: CEM Zero

Customer:		**Batch/Lot#:**	**202LAP47501C**
Date of Certification:		**Test Cylinder #:**	**ALM059095**
P.O. Number:		**Item Number:**	**7501**
Document Number:		**Valve:**	**580**
		Cylinder Size:	**30AL**

ANALYSIS REPORT

Major Component	Specification	Purity
Nitrogen CEM Zero	99.9995%**	99.9995%

Impurities	Specification	Actual Analysis
Moisture	<2 ppm	<2.0000ppm
Oxygen	<0.5 ppm	<0.5000ppm
Total Hydrocarbons	<0.5 ppm	<0.1000ppm
Carbon Dioxide	<1 ppm	<0.1000ppm
Carbon Monoxide	<1 ppm	<0.5000ppm
NOx*	<0.1 ppm	<0.1000ppm
SOx*	<0.1 ppm	<0.1000ppm

**Excludes Argon

*Typical Property

Notes:

Certified By: _____

Elving Chamorro

Air Liquide America Specialty Gases LLC

11426 Fairmont Pkwy LaPorte, TX 77571-6000

Phone: 281-474-8400

AIR LIQUIDE Air Liquide America Specialty Gases LLC Scott

RATA CLASS

Dual-Analyzed Calibration Standard

11426 FAIRMONT PKWY, LA PORTE, TX 77571 Phone: 800-248-1427 Fax: 281-474-8419

CERTIFICATE™ OF ACCURACY: Interference Free Multi-Component EPA Protocol Gas

Assay Laboratory - PGVP Vendor ID: A32013

AIR LIQUIDE AMERICA SPECIALTY GASES LLC
11426 FAIRMONT PKWY
LA PORTE, TX 77571

P.O. No.:
Document # : 49230780-001
Folio #:AH094

Customer
AIR HYGIENE INTERNATIONAL

MIKE SCOTT
1600 WEST TACOMA ST
BROKEN ARROW OK 74012
US

ANALYTICAL INFORMATION Gas Type : CO2,O2,BALN

This certification was performed according to EPA Traceability Protocol For Assay & Certification of Gaseous Calibration Standards; Procedure G-1; September, 1997.

Cylinder Number: CC352363 **Certification Date:** 15Jan2013 **Exp. Date:** 16Jan2021
Cylinder Pressure*:** 1900 PSIG **Batch No:** LAP0079843

COMPONENT	CERTIFIED CONCENTRATION (Moles)	ACCURACY**	TRACEABILITY
OXYGEN	11.9 %	+/- 1%	
CARBON DIOXIDE	9.06 %	+/- 1%	Direct NIST and VSL
NITROGEN	BALANCE		

*** Do not use when cylinder pressure is below 150 psig.
** Analytical accuracy is based on the requirements of EPA Protocol Procedure G1, September 1997.

REFERENCE STANDARD

TYPE/SRM NO.	EXPIRATION DATE	CYLINDER NUMBER	CONCENTRATION	COMPONENT
NTRM 2658 1	01Feb2016	K025996	10.03 %	OXYGEN
NTRM 1674	03Feb2016	K010416	7.016 %	CARBON DIOXIDE

INSTRUMENTATION

INSTRUMENT/MODEL/SERIAL#	DATE LAST CALIBRATED	ANALYTICAL PRINCIPLE
SERVOMEX/MODEL 244A/701/716	07Jan2013	PARAMAGNETIC
FTIR//000929060	07Jan2013	FTIR

ANALYZER READINGS

(Z=Zero Gas R=Reference Gas T=Test Gas r=Correlation Coefficient)

First Triad Analysis | Second Triad Analysis | Calibration Curve

OXYGEN

Date: 21Jan2013 Response Unit: VOLTS

Z1=0.00000	R1=0.40820	T1=0.48530
R2=0.40900	Z2=0.00000	T2=0.48490
Z3=0.00000	T3=0.48530	R3=0.40870

Avg. Concentration: 11.91 %

Concentration=A+Bx+Cx2+Dx3+Ex4
r=0.9999991
Constants: A=-0.00942348
B=24.71207253 C=
D= E=

CARBON DIOXIDE

Date: 15Jan2013 Response Unit: %

Z1=-0.00158	R1=7.02170	T1=9.06968
R2=7.02435	Z2=-0.00158	T2=9.07213
Z3=0.00099	T3=9.07609	R3=7.03171

Avg. Concentration: 9.060 %

Concentration=A+Bx+Cx2+Dx3+Ex4
r=9.99998E-1
Constants: A=0.00000E+0
B=7.40243E-1 C=7.28100E-3
D=0.00000E+0 E=0.00000E+0

Special Notes: AH094 LIST ITEM AH094 ON CERTS AND TAGS CGA 590 ; DEW PT. 40 DEG. F.

APPROVED BY: DAVID KELLY

AIR LIQUIDE Air Liquide America Specialty Gases LLC

Intertek

RATA CLASS

Guaranteed +/- 1% Accuracy

8832 DICE ROAD, SANTA FE SPRINGS, CA 90670-2516 Phone: 800-323-2212 Fax: 562-464-5262

CERTIFICATE OF ACCURACY: EPA Protocol Gas

Assay Laboratory - PGVP Vendor ID: A52014
AIR LIQUIDE AMERICA SPECIALTY GASES LLC
8832 DICE ROAD
SANTA FE SPRINGS, CA 90670-2516

P.O. No.:
Document # : 54627260-003
Folio #:AH095

Customer
AIR HYGIENE INTERNATIONAL
MIKE SCOTT
1600 WEST TACOMA ST
BROKEN ARROW OK 74012
US

ANALYTICAL INFORMATION Gas Type : CO2,O2,BALN

This certification was performed according to EPA Traceability Protocol For Assay & Certification of Gaseous Calibration Standards; Procedure G-1, EPA/600/R-12/531; May 2012. Do not use this standard if pressure is less than 100 psig.

Cylinder Number: CC101517
Cylinder Pressure: 2000 PSIG
Certification Date: 08Apr2014
Exp. Date: 09Apr2022
Batch No: SB00090425

COMPONENT	CERTIFIED CONCENTRATION (Moles)		ACCURACY (ABSOLUTE / RELATIVE)			
OXYGEN	20.9	%	0.13	%	/ 0.6	%
CARBON DIOXIDE	19.0	%	0.12	%	/ 0.6	%
NITROGEN		BALANCE				

TRACEABILITY

REFERENCE STANDARD

COMPONENT	CONCENTRATION		UNCERTAINTY		CYLINDER	TYPE/SRM SAMPLE	EXP. DATE
OXYGEN	20.8500	%	0.1300	%	K000461	NTRM 2659/020500	14May2018
CARBON DIOXIDE	13.9400	%	0.0800	%	K014199	NTRM 1675	05Jan2018

ANALYTICAL METHOD

1st Analysis: 08Apr2014

COMPONENT	INSTRUMENT	ANALYTICAL/PRINCIPLE	CALIBRATED	CONCENTRATION
OXYGEN	VARIAN B/3400/2806	FID & TCD	03Apr2014	20.90 %
CARBON DIOXIDE	VARIAN B/3400/2806	FID & TCD	10Mar2014	18.96 %

Special Notes: AH095 LIST ITEM AH095 ON CERTS AND TAGS

APPROVED BY: DC

Page 1 of 1

AIR LIQUIDE Air Liquide America Specialty Gases LLC

Intertek

RATA CLASS

Guaranteed +/- 1% Accuracy

8832 DICE ROAD, SANTA FE SPRINGS, CA 90670-2516 Phone: 800-323-2212 Fax: 562-464-5262

CERTIFICATE OF ACCURACY: EPA Protocol Gas

Assay Laboratory - PGVP Vendor ID: A52014
AIR LIQUIDE AMERICA SPECIALTY GASES LLC
8832 DICE ROAD
SANTA FE SPRINGS, CA 90670-2516

P.O. No.:
Document # : 54627260-001
Folio #:AH125

Customer
AIR HYGIENE INTERNATIONAL
MIKE SCOTT
1600 WEST TACOMA ST
BROKEN ARROW OK 74012
US

ANALYTICAL INFORMATION Gas Type : CO,NO,BALN

This certification was performed according to EPA Traceability Protocol For Assay & Certification of Gaseous Calibration Standards; Procedure G-1, EPA/600/R-12/531; May 2012. Do not use this standard if pressure is less than 100 psig.

Cylinder Number: AAL9030 Certification Date: 05Apr2014 Exp. Date: 06Apr2022
Cylinder Pressure: 2000 PSIG Batch No: SB00090248

COMPONENT	CERTIFIED CONCENTRATION (Moles)		ACCURACY (ABSOLUTE / RELATIVE)			
CARBON MONOXIDE	180	PPM	1.1	PPM	/ 0.6	%
NITRIC OXIDE	180	PPM	1.0	PPM	/ 0.6	%
NITROGEN - OXYGEN FREE		BALANCE				
TOTAL OXIDES OF NITROGEN	180.	PPM	Reference Value Only			

TRACEABILITY

REFERENCE STANDARD

COMPONENT	CONCENTRATION		UNCERTAINTY		CYLINDER	TYPE/SRM SAMPLE	EXP. DATE
CARBON MONOXIDE	240.8000	PPM	1.4000	PPM	KAL004023	NTRM 2636	03Nov2017
NITRIC OXIDE	242.0000	PPM	1.3000	PPM	KAL004383	NTRM 1685	04Jan2018

ANALYTICAL METHOD

1st Analysis: 05Apr2014

COMPONENT	INSTRUMENT	ANALYTICAL/PRINCIPLE	CALIBRATED	CONCENTRATION
CARBON MONOXIDE	MKS-FTIR/2030/001785245	FTIR	13Mar2014	179.7 PPM
NITRIC OXIDE	MKS-FTIR/2030/001785245	FTIR	20Mar2014	179.4 PPM

2nd Analysis: 14Apr2014

COMPONENT	INSTRUMENT	ANALYTICAL/PRINCIPLE	CALIBRATED	CONCENTRATION
NITRIC OXIDE	MKS-FTIR/2030/001785245	FTIR	20Mar2014	180.3 PPM

Special Notes: AH125 LIST ITEM AH125,ON CERTS AND TAGS"

APPROVED BY: THUAN TRAN

Page 1 of 1

AIR LIQUIDE SPECIALTY GASES Scott

Download as...

1200 COMBERMERE STREET, TROY, MI 48083 Phone: 248-589-2950 Fax: 248-589-2134

RATA CLASS

Dual-Analyzed Calibration Standard

CERTIFICATE OF ACCURACY: Interference Free™ Multi-Component EPA Protocol Gas

Assay Laboratory - PGVP Vendor ID: A22013
AIR LIQUIDE AMERICA SPECIALTY GASES LLC
1200 COMBERMERE STREET
TROY, MI 48083

P.O. No.:
Document # : 49230602-002
Foko #:AH076

Customer
AIR HYGIENE INTERNATIONAL
MIKE SCOTT
1600 WEST TACOMA ST
BROKEN ARROW OK 74012
US

ANALYTICAL INFORMATION Gas Type : CO,NO,BALN

This certification was performed according to EPA Traceability Protocol For Assay & Certification of Gaseous Calibration Standards, Procedure G-1; September, 1997.

Cylinder Number: ALM046647
Cylinder Pressure*:** 1959 PSIG

Certification Date: 30Jan2013

Exp. Date: 31Jan2021
Batch No: TRO0073448

COMPONENT	CERTIFIED CONCENTRATION (Moles)	ACCURACY**	TRACEABILITY
CARBON MONOXIDE	4,550 PPM	+/- 1%	Direct NIST and VSL
NITRIC OXIDE	4,510 PPM	+/- 1%	
NITROGEN - OXYGEN MIX	BALANCE		
TOTAL OXIDES OF NITROGEN	4,510. PPM		Information Value Only

*** Do not use when cylinder pressure is below 150 psig.
** Analytical accuracy is based on the requirements of EPA Protocol Procedure G1, September 1997.

REFERENCE STANDARD

TYPE/SRM NO.	EXPIRATION DATE	CYLINDER NUMBER	CONCENTRATION	COMPONENT
NTRM 2639.50	01May2016	ALM005612	5012. PPM	CARBON MONOXIDE
NTRM 3600	23Mar2017	KAL003350	3400. PPM	NITRIC OXIDE

INSTRUMENTATION

INSTRUMENT/MODEL/SERIAL#	DATE LAST CALIBRATED	ANALYTICAL PRINCIPLE
FTIR/0928021	22Jan2013	FTIR
CAI/006X11041	07Jan2013	CHEMI

ANALYZER READINGS

(Z=Zero Gas R=Reference Gas T=Test Gas r=Correlation Coefficient)

First Triad Analysis	Second Triad Analysis	Calibration Curve
CARBON MONOXIDE		
Date: 23Jan2013 Response Unit: PPM	Date: 30Jan2013 Response Unit: PPM	Concentration=A+Bx+Cx2+Dx3+Ex4
Z1=0.03998 R1=4868.613 T1=4554.035	Z1=-0.00030 R1=4851.740 T1=4514.110	r=0.999941E+1
R2=4869.440 Z2=1.13407 T2=4558.301	R2=4853.570 Z2=1.05910 T2=4547.069	Constants: A=0.00000E+0
Z3=1.47825 T3=4561.120 R3=4873.331	Z3=1.27783 T3=4561.765 R3=4856.310	B=1.87000E+1 C=3.28000E-4
Avg. Concentration: 4546 PPM	Avg. Concentration: 4554. PPM	D=0.00000E+0 E=0.00000E+0
NITRIC OXIDE		
Date: 23Jan2013 Response Unit: PPM	Date: 01Feb2013 Response Unit: PPM	Concentration=A+Bx+Cx2+Dx3+Ex4
Z1=0.00000 R1=3456.000 T1=4508.000	Z1=0.00000 R1=3456.000 T1=4507.000	r=0.999999
R2=3456.000 Z2=0.00000 T2=4508.000	R2=3456.000 Z2=0.00000 T2=4507.000	Constants: A=0.3917099
Z3=0.00000 T3=4508.000 R3=3456.000	Z3=0.00000 T3=4507.000 R3=3456.000	B=0.999981160 C=0
Avg. Concentration: 4508 PPM	Avg. Concentration: 4507 PPM	D=0 E=0

Special Notes:
AH076 LIST ITEM AH076 ON CERTS AND TAGS

QUALITY ASSURANCE

APPROVED BY: JEFF CROTEAU
(signature on file)

AIR LIQUIDE | Air Liquide America Specialty Gases LLC | Scott

COMPLIANCE CLASS

Guaranteed +/- 2% Accuracy

1290 COMBERMERE STREET, TROY, MI 48083 Phone: 248-589-2950 Fax: 248-589-2134

CERTIFICATE OF ACCURACY: EPA Protocol Gas

Assay Laboratory - PGVP Vendor ID: A22013
AIR LIQUIDE AMERICA SPECIALTY GASES LLC
1290 COMBERMERE STREET
TROY, MI 48083

P.O. No.:
Document # : 52629127-003
Folio #:AH033

Customer
AIR HYGIENE INTERNATIONAL
MIKE SCOTT
1600 WEST TACOMA ST
BROKEN ARROW OK 74012
US

ANALYTICAL INFORMATION Gas Type : NO2,BALA

This certification was performed according to EPA Traceability Protocol For Assay & Certification of Gaseous Calibration Standards; Procedure G-1. EPA/600/R-12/531; May 2012. Do not use this standard if pressure is less than 100 psig.

Cylinder Number:	ALM057038	Certification Date:	04Nov2013	Exp. Date:	05Nov2019
Cylinder Pressure:	2000 PSIG			Batch No:	TRO0095740

COMPONENT	CERTIFIED CONCENTRATION (Moles)	ACCURACY (ABSOLUTE / RELATIVE)
NITROGEN DIOXIDE	47.9 PPM	0.5 PPM / 1.1 %
AIR	BALANCE	

TRACEABILITY

REFERENCE STANDARD

COMPONENT	CONCENTRATION	UNCERTAINTY	CYLINDER	TYPE/SRM SAMPLE	EXP. DATE
NITROGEN DIOXIDE	299.0000 PPM	3.2000 PPM	ALM034150	300 NO2	30Aug2014

ANALYTICAL METHOD

1st Analysis: 28Oct2013

COMPONENT	INSTRUMENT	ANALYTICAL/PRINCIPLE	CALIBRATED	CONCENTRATION
NITROGEN DIOXIDE	AMETEK 921/921 CE NO2/AW-921-S281	UV	29Oct2013	47.80 PPM

2nd Analysis: 04Nov2013

COMPONENT	INSTRUMENT	ANALYTICAL/PRINCIPLE	CALIBRATED	CONCENTRATION
NITROGEN DIOXIDE	AMETEK 921/921 CE NO2/AW-921-S281	UV	29Oct2013	47.90 PPM

Special Notes: AH033 RANGE 45 / 50 PPM NITROGEN DIOXIDE

APPROVED BY: JEFF CROTEAU

AIR LIQUIDE | Air Liquide America Specialty Gases LLC | Scott

RATA CLASS

Guaranteed +/- 1% Accuracy

1290 COMBERMERE STREET, TROY, MI 48083 Phone: 248-589-2950 Fax: 248-589-2134

CERTIFICATE OF ACCURACY: EPA Protocol Gas

Assay Laboratory - PGVP Vendor ID: A22013
AIR LIQUIDE AMERICA SPECIALTY GASES LLC
1290 COMBERMERE STREET
TROY, MI 48083

P.O. No.:
Document # : 52629127-006
Folio #:AH053

Customer
AIR HYGIENE INTERNATIONAL
MIKE SCOTT
1600 WEST TACOMA ST
BROKEN ARROW OK 74012
US

ANALYTICAL INFORMATION Gas Type : PPN,BALN

This certification was performed according to EPA Traceability Protocol For Assay & Certification of Gaseous Calibration Standards; Procedure G-1. EPA/600/R-12/531; May 2012. Do not use this standard if pressure is less than 100 psig.

Cylinder Number: CC151957
Cylinder Pressure: 1950 PSIG
Certification Date: 28Oct2013
Exp. Date: 29Oct2021
Batch No: TR00095685

COMPONENT	CERTIFIED CONCENTRATION (Moles)		ACCURACY (ABSOLUTE / RELATIVE)			
PROPANE	160	PPM	1.0	PPM	/ 0.6	%
NITROGEN		BALANCE				

TRACEABILITY

REFERENCE STANDARD

COMPONENT	CONCENTRATION		UNCERTAINTY		CYLINDER	TYPE/SRM SAMPLE	EXP. DATE
PROPANE	98.8000	PPM	0.6000	PPM	ALM038653	NTRM 1668	12Jul2018

ANALYTICAL METHOD

1st Analysis: 28Oct2013

COMPONENT	INSTRUMENT	ANALYTICAL/PRINCIPLE	CALIBRATED	CONCENTRATION
PROPANE	VARIAN/3400/7506	TCD/FID	16Oct2013	160.0 PPM

Special Notes: ITEM AH053

APPROVED BY: ROBERT LEGNIAK

APPENDIX D

QUALITY ASSURANCE AND QUALITY CONTROL DATA

QA/QC PROGRAM

Air Hygiene ensures the quality and validity of its emission measurement and reporting procedures through a rigorous quality assurance (QA) program. The program is developed and administered by an internal QA team and encompasses five major areas:

1. QA reviews of reports, laboratory work, and field testing
2. Equipment calibration and maintenance
3. Chain-of-custody
4. Training
5. Knowledge of current test methods

Each of these areas is discussed individually below.

QA Reviews

Air Hygiene's review procedure includes review of each source test report, along with laboratory and fieldwork, by the QA Team. The most important review is the one that takes place before a test program begins. The QA Team works closely with technical division personnel to prepare and review test protocols. Test protocol review includes selection of appropriate test procedures, evaluation of interferences or other restrictions that might preclude use of standard test procedures, and evaluation and/or development of alternate procedures.

Equipment Calibration and Maintenance

The equipment used to conduct the emission measurements is maintained according to the manufacturer's instructions to ensure proper operation. In addition to the maintenance program, calibrations are carried out on each measurement device according to the schedule outlined by the Environmental Protection Agency. Quality control checks are also conducted in the field for each test program.

Chain-of-Custody

Air Hygiene maintains full chain-of-custody documentation on all samples and data sheets. In addition to normal documentation of changes between field sample custodians, laboratory personnel, and field test personnel, Air Hygiene documents every individual who handles any test component in the field (e.g., probe wash, impinger loading and recovery, filter loading and recovery, etc.). Samples are stored in a locked area to which only Air Hygiene personnel have access. Field data sheets are secured at Air Hygiene's offices upon return from the field.

Training

Personnel's training is essential to ensure quality testing. Air Hygiene has formal and informal training programs, which include:

1. Attendance at EPA-sponsored training courses
2. Enrollment in EPA correspondence courses
3 A requirement for all technicians to read and understand Air Hygiene's QA manual
4. In-house training and QA meetings on a regular basis
5. Maintenance of training records

Knowledge of Current Test Methods

With the constant updating of standard test methods and the wide variety of emerging test procedures, it is essential that any qualified source tester keep abreast of new developments. Air Hygiene subscribes to services, which provide updates on EPA reference methods, rules, and regulations. Additionally, source test personnel regularly attend and present papers at testing and emission-related seminars and conferences. Air Hygiene personnel maintain membership in the Air and Waste Management Association and the American Industrial Hygiene Association.

Reproduction and Distribution Policy

Reproducing portions of this test report may omit critical or substantial documentation or be taken out of context and due care must be exercised in this regard. Furthermore, this test report and its associated data shall not be reproduced in full or in part without the written consent of the customer.

COMBUSTION TESTING QUALITY ASSURANCE ACTIVITIES

A number of quality assurance activities were undertaken before, during, and after this testing project. This section of the report combined with the documentation in Appendix C describes each of those activities.

Each instrument's response was checked and adjusted in the field prior to the collection of data via multi-point calibration. The instrument's linearity was checked by adjusting its zero and span responses to zero nitrogen and an upscale calibration gas in the range of the expected concentrations. The instrument response was then challenged with other calibration gases of known concentration and accepted as being linear if the response of the other calibration gases agreed within plus or minus two percent of the range of predicted values. NO_2 to NO conversion was checked via direct connect with an EPA Protocol certified concentration of NO_2 in a balance of air. Conversion was verified to be between 90 and 110 percent.

After each test run, the analyzers were checked for zero and span drift. This allowed each test run to be bracketed by calibrations and documents the precision of the data just collected. The criterion for acceptable data is that the instrument drift is no more than three percent of the full-scale response. The quality assurance worksheets in the following pages summarize all multipoint calibration checks and zero to span checks performed during the tests. These worksheets (as prepared from the data records of Appendix A) show that no drifts in excess of three percent occurred in the zero to span checks following each test run.

The sampling systems were leak checked by demonstrating that a vacuum greater than 10 in Hg could be held for at least one minute with a decline of less than one inch of Hg. A leak test was conducted after the sample system was set up and before the system was dismantled. This test was conducted to ensure that ambient air had not diluted the sample. Any leakage detected prior to the tests would be repaired and another leak check conducted before testing commenced. No leaks were found during the pre or post-test leak checks.

The absence of leaks in the sampling system was also verified by a sampling system bias check. The sampling system's integrity was tested by comparing the responses of the analyzers to the calibration gases introduced via two paths. The first path was directly into the analyzer and the second path via the sample system at the sample probe. Any difference in the instrument responses by these two methods was attributed to sampling system bias or leakage. The criterion for acceptance is agreement within five percent of the span of the analyzer.

The control gases used to calibrate the instruments were analyzed and certified by the compressed gas vendors to plus or minus one percent accuracy for all gases. EPA Protocol No. 1 was used, where applicable to assign the concentration values traceable to the National Institute of Standards and Technology (NIST), Standard Reference Materials (SRM's). The gas calibration sheets as prepared by the vendor are contained in Appendix C.

Air Hygiene collected and reported the enclosed test data in accordance with the procedures and quality assurance activities described in this test report. Air Hygiene makes no warranty as to the suitability of the test methods. Air Hygiene also assumes no liability relating to the interpretation and use of the test data.

INSTRUMENTAL ANALYSIS QUALITY ASSURANCE DATA

Date: November 17, 2014
Company: XTO Energy, Inc.
Location: Love County, Oklahoma
Techs: MP

Sample System Leak Check

Date	Sample System	Leak Rate (l/min)
November 17, 2014	1	0

xto-14-multi.ok-eng#13-Hart 1-03H_805637

Calibration Date: November 17, 2014
Client: XTO Energy, Inc.

NOx Span (ppm) = 125.00

THERMO 42c (NOx Analyzer)				
Certified Concentration (ppm)	Instrument Response (ppm)	Calibration Error (%)	Absolute Conc. (ppm)	Pass or Fail (±2%, ≤0.5ppm)
0.00	0.01	0.01	0.01	YES (%)
60.00	57.94	-1.65	2.06	YES (%)
125.00	125.03	0.02	0.03	YES (%)
Linearity = 0.999				

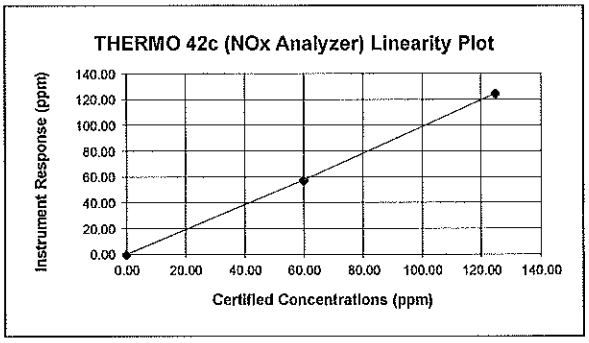

CO Span (ppm) = 800.00

THERMO 48i (CO Analyzer)				
Certified Concentration (ppm)	Instrument Response (ppm)	Calibration Error (%)	Absolute Conc. (ppm)	Pass or Fail (±2%, ≤0.5ppm)
0.00	0.15	0.02	0.15	YES (%)
400.00	401.86	0.23	1.86	YES (%)
800.00	803.64	0.45	3.64	YES (%)
Linearity = 0.996				

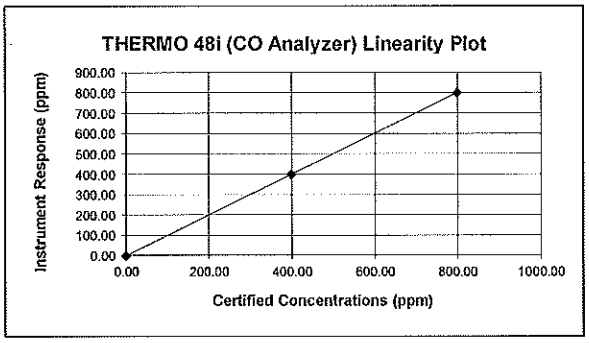

O_2 Span (%) = 20.90

SERVOMEX 1440 (O_2 Analyzer)				
Certified Concentration (%)	Instrument Response (%)	Calibration Error (%)	Absolute Conc. (%)	Pass or Fail (±2%, ≤0.5%)
0.00	-0.05	-0.24	0.05	YES (%)
11.90	11.96	0.29	0.06	YES (%)
20.90	21.03	0.62	0.13	YES (%)
Linearity = 0.991				

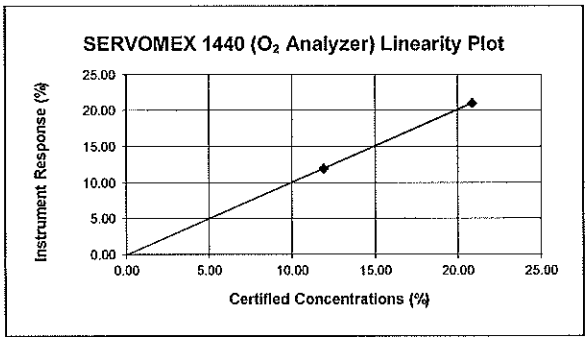

VOC Range (ppm) = 125

VIG 210 (THC/VOC Analyzer)				
Certified Concentration (ppm)	Instrument Response (ppm)	Calibration Error (%)	Estimated Point (ppm)	Pass or Fail (±2,5%)[1]
0.00	-0.02	-0.02	N/A	YES
40.00	39.94	-0.46	40.12	YES
65.00	65.40	0.29	65.21	YES
100.00	100.34	0.27	N/A	YES
Linearity = 0.994				

[1]-zero/high based on 2% of span,low/mid based on 5% of concentration

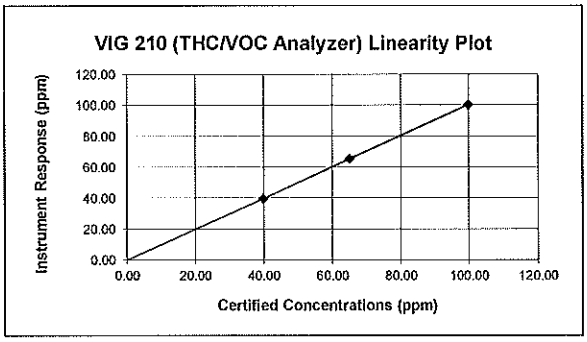

Method 205 Gas Diluter Validation Daily Test Procedure

Calibration Date: November 17, 2014

Client: XTO Energy, Inc.

Target Analyzer Serial No: INST-O2-0012

Dilution System Serial No: 4446

Step 1	Calibrate Oxygen analyzer per normal procedure using EPA protocol gases (~ 21.0% and ~12.0%) - RM 205-3.2

Step 2	Using diluter, send a programmed mid (11.0%) and high (18.0%) diluted gas made with the EPA protocol high gas (~21.0%) and nitrogen. Repeat 3 times and complete validation tables below for each diluted gas. - RM 205-3.2.1 - 3.2.5

High Level Diluted Gas Validation Table

Trial #	Diluter Output (18.0%)	Instrument Response (%)	% Error	% Drift
1	18.00	18.05	-0.28%	0.00%
2	18.00	18.06	-0.33%	0.06%
3	18.00	18.04	-0.22%	-0.06%
AVG	18.00	18.05	-0.28%	

If Mid Level Protocol Gas = 11.9 ppm then ±10 = 10.71 to 13.09

Mid Level Diluted Gas Validation Table (within 10% Mid level Protocol Gas)

Trial #	Diluter Output (11.0%)	Instrument Response (%)	% Error	% Drift
1	11.00	11.00	0.00%	0.00%
2	11.00	11.01	-0.09%	0.09%
3	11.00	10.99	0.09%	-0.09%
AVG	11.00	11.00	0.00%	

Step 3	Introduce the EPA protocol gas directly to the analyzer bypassing the diluter. Repeat 3 times and complete validation table below. RM 205-3.2.6

Mid Level Protocol Gas Validation Table

Trial #	Certified Value (%)	Instrument Response (%)	% Error	% Drift
1	11.9	11.90	0.00%	-0.06%
2	11.9	11.90	0.00%	-0.06%
3	11.9	11.92	-0.17%	0.11%
AVG	11.9	11.91	-0.06%	

Step 4	If diluter passes all %Error and %Difference (< 2.0%) it is certified for use throughout the field test.

NOx Converter Efficiency

Date: November 17, 2014

Analyzer: INST-NX-0012

RM 7E, (02-27-14), Sections 7.1.4; 8.2.4.1; 12.7; and 13.5 Introduce NO_2 to the analyzer and record the NOx concentration displayed. ... Calculate the converter efficiency using Equation 7E-7. The specification for converter efficiency must be met. ... Air Hygiene also references ALT-0013 for specific NO_2 concentration (40-60 ppm) and EPA Traceability Protocol requirements (±2%).

Audit Gas:	NO_2 Concentration (C_v), ppmvd	**47.9**
Converter Efficiency Calculations:		
	Analyzer Reading, NO Channel, ppmvd	**2.81**
	Analyzer Reading, NOx Channel, ppmvd	**51.02**
	Analyzer Reading, NO_2 Channel ($C_{Dir(NO2)}$), ppmvd	**48.21**
	Converter Efficiency, %	**100.65**

RM 7E, (02-27-14), 13.5 NO_2 to NO Conversion Efficiency Test (as applicable). The NO_2 to NO conversion efficiency, calculated according to Equation 7E-7, must be greater than or equal to 90 percent.

$$Eff_{NO2} = \left(\frac{C_{Dir}}{C_v}\right) \times 100$$

Eq. 7E-7 = $\frac{48.21 \text{ ppmvd}}{47.90 \text{ ppmvd}}$ x 100 = 100.65%

Date/Time mm/dd/yy hh:mm:ss	Elapsed Time Seconds	NOx ppmvd	NO ppmvd
11/17/14 07:59:23	1820	50.96	2.81
11/17/14 07:59:33	1830	50.95	2.81
11/17/14 07:59:43	1840	50.94	2.87
11/17/14 07:59:53	1850	50.94	2.83
11/17/14 08:00:03	1860	50.92	2.83
11/17/14 08:00:13	1870	51.02	2.81
11/17/14 08:00:23	1880	51.01	2.82
11/17/14 08:00:33	1890	51.02	2.71
11/17/14 08:00:43	1900	50.99	2.26
11/17/14 08:00:53	1910	51.06	2.35

DRIFT AND BIAS CHECK				
Run - 1	O_2	NOx	CO	VOC
Raw Average	-0.05	26.36	202.06	-0.13
Corrected Average	0.00	26.17	201.28	0.06
Initial Zero	-0.03	0.31	0.13	-0.10
Final Zero	0.00	0.26	0.43	-0.32
Avg. Zero	-0.02	0.29	0.28	-0.21
Initial UpScale	11.89	59.96	402.08	40.08
Final UpScale	11.92	60.17	400.48	39.87
Avg. UpScale	11.91	60.07	401.28	39.98
Sys Resp (Zero)	-0.05	0.01	0.15	-0.02
Sys Resp (Upscale)	11.96	57.94	401.86	39.94
Upscale Cal Gas	11.90	60.00	400.00	40.00
Initial Zero Bias	0.10%	0.24%	0.00%	-0.06%
Final Zero Bias	0.24%	0.20%	0.04%	-0.24%
Zero Drift	0.14%	0.04%	0.04%	0.18%
Initial Upscale Bias	-0.33%	1.62%	0.03%	0.11%
Final Upscale Bias	-0.19%	1.78%	-0.17%	-0.06%
Upscale Drift	0.14%	0.17%	0.20%	0.17%
Alternative Specification Abs Diff: Initial Zero	0.02	0.30	0.02	--
Alternative Specification Abs Diff: Final Zero	0.05	0.25	0.28	--
Alternative Specification Abs Diff: Initial Upscale	0.07	2.02	0.22	--
Alternative Specification Abs Diff: Final Upscale	0.04	2.23	1.38	--
Calibration Span	20.90	125.00	800.00	125.00
3% of Cal. Span (drift)	0.63	3.75	24.00	3.75
5% of Cal. Span (bias)	1.05	6.25	40.00	6.25

DRIFT AND BIAS CHECK				
Run - 2	O_2	NOx	CO	VOC
Raw Average	-0.02	27.13	221.40	0.93
Corrected Average	0.00	27.18	222.27	1.43
Initial Zero	0.00	0.26	0.43	-0.32
Final Zero	0.01	-0.17	0.02	-0.29
Avg. Zero	0.01	0.05	0.23	-0.31
Initial UpScale	11.92	60.17	400.48	39.87
Final UpScale	11.92	59.46	396.04	40.94
Avg. UpScale	11.92	59.82	398.26	40.41
Sys Resp (Zero)	-0.05	0.01	0.15	-0.02
Sys Resp (Upscale)	11.96	57.94	401.86	39.94
Upscale Cal Gas	11.90	60.00	400.00	40.00
Initial Zero Bias	0.24%	0.20%	0.04%	-0.24%
Final Zero Bias	0.29%	-0.14%	-0.02%	-0.22%
Zero Drift	0.05%	0.34%	0.05%	0.02%
Initial Upscale Bias	-0.19%	1.78%	-0.17%	-0.06%
Final Upscale Bias	-0.19%	1.22%	-0.73%	0.80%
Upscale Drift	0.00%	0.57%	0.56%	0.86%
Alternative Specification Abs Diff: Initial Zero	0.05	0.25	0.28	--
Alternative Specification Abs Diff: Final Zero	0.06	0.18	0.13	--
Alternative Specification Abs Diff: Initial Upscale	0.04	2.23	1.38	--
Alternative Specification Abs Diff: Final Upscale	0.04	1.52	5.82	--
Calibration Span	20.90	125.00	800.00	125.00
3% of Cal. Span (drift)	0.63	3.75	24.00	3.75
5% of Cal. Span (bias)	1.05	6.25	40.00	6.25

DRIFT AND BIAS CHECK				
Run - 3	O_2	NOx	CO	VOC
Raw Average	-0.04	27.95	249.23	-0.14
Corrected Average	0.00	28.45	249.50	0.01
Initial Zero	0.01	-0.17	0.02	-0.29
Final Zero	0.00	-0.20	0.12	-0.07
Avg. Zero	0.01	-0.19	0.07	-0.18
Initial UpScale	11.92	59.46	396.04	40.94
Final UpScale	11.97	58.82	403.02	40.93
Avg. UpScale	11.95	59.14	399.53	40.94
Sys Resp (Zero)	-0.05	0.01	0.15	-0.02
Sys Resp (Upscale)	11.96	57.94	401.86	39.94
Upscale Cal Gas	11.90	60.00	400.00	40.00
Initial Zero Bias	0.29%	-0.14%	-0.02%	-0.22%
Final Zero Bias	0.24%	-0.17%	0.00%	-0.04%
Zero Drift	0.05%	0.02%	0.01%	0.18%
Initial Upscale Bias	-0.19%	1.22%	-0.73%	0.80%
Final Upscale Bias	0.05%	0.70%	0.14%	0.79%
Upscale Drift	0.24%	0.51%	0.87%	0.01%
Alternative Specification Abs Diff: Initial Zero	0.06	0.18	0.13	--
Alternative Specification Abs Diff: Final Zero	0.05	0.21	0.03	--
Alternative Specification Abs Diff: Initial Upscale	0.04	1.52	5.82	--
Alternative Specification Abs Diff: Final Upscale	0.01	0.88	1.16	--
Calibration Span	20.90	125.00	800.00	125.00
3% of Cal. Span (drift)	0.63	3.75	24.00	3.75
5% of Cal. Span (bias)	1.05	6.25	40.00	6.25

Environics®

Series 4040

System S/N 4446

ENVIRONICS FLOW CONTROLLER CALIBRATION SHEET

MFC # 1 Size: 10,000 SCCM

SERIAL NUMBER 4569900001

This flow controller was calibrated using a NIST-traceable Flow Standard. This calibration was performed with Nitrogen at a standard reference temperature and pressure of 32°F and 29.92 in. Hg. This is not performance data. This data is used by the system operating modes to improve the flow accuracy.

		Set Flow		True Flow	
5	%	500.0	SCCM	484.456	SCCM
10	%	1000.0	SCCM	999.846	SCCM
20	%	2000.0	SCCM	2027.310	SCCM
30	%	3000.0	SCCM	3046.342	SCCM
40	%	4000.0	SCCM	4062.154	SCCM
50	%	5000.0	SCCM	5078.193	SCCM
60	%	6000.0	SCCM	6097.326	SCCM
70	%	7000.0	SCCM	7113.480	SCCM
80	%	8000.0	SCCM	8106.860	SCCM
90	%	9000.0	SCCM	9122.147	SCCM
100	%	10000.0	SCCM	10150.430	SCCM

Verified by: Lenie Lundmark Date: 4-9-14

Computerized Gas Mixing / Dilution / Calibration Systems
Environics Inc. • 69 Industrial Park Road East • Tolland, CT 06084 • (860) 872-1111 • Fax: (860) 870-9333
World Wide Web: http://www.environics.com E-mail: info@environics.com

Environics®

Series 4040

System S/N 4446

ENVIRONICS FLOW CONTROLLER CALIBRATION SHEET

MFC # 2 Size: 10,000 SCCM

SERIAL NUMBER 4569900002

This flow controller was calibrated using a NIST-traceable Flow Standard. This calibration was performed with Nitrogen at a standard reference temperature and pressure of 32°F and 29.92 in. Hg. This is not performance data. This data is used by the system operating modes to improve the flow accuracy.

		Set Flow		True Flow	
5	%	500.0	SCCM	488.537	SCCM
10	%	1000.0	SCCM	1004.682	SCCM
20	%	2000.0	SCCM	2033.609	SCCM
30	%	3000.0	SCCM	3052.454	SCCM
40	%	4000.0	SCCM	4066.236	SCCM
50	%	5000.0	SCCM	5075.313	SCCM
60	%	6000.0	SCCM	6076.463	SCCM
70	%	7000.0	SCCM	7083.255	SCCM
80	%	8000.0	SCCM	8089.326	SCCM
90	%	9000.0	SCCM	9103.936	SCCM
100	%	10000.0	SCCM	10144.535	SCCM

Verified by: Terri Lundmark Date: 4-9-14

Computerized Gas Mixing / Dilution / Calibration Systems
Environics Inc. • 69 Industrial Park Road East • Tolland, CT 06084 • (860) 872-1111 • Fax: (860) 870-9333
World Wide Web: http://www.environics.com E-mail: info@environics.com

Environics®

Series 4040

System S/N 4446

ENVIRONICS FLOW CONTROLLER CALIBRATION SHEET

MFC # 3 Size: 1000 SCCM

SERIAL NUMBER 4523300001

This flow controller was calibrated using a NIST-traceable Flow Standard. This calibration was performed with Nitrogen at a standard reference temperature and pressure of 32°F and 29.92 in. Hg. This is not performance data. This data is used by the system operating modes to improve the flow accuracy.

		Set Flow		True Flow	
5	%	50.0	SCCM	49.083	SCCM
10	%	100.0	SCCM	100.141	SCCM
20	%	200.0	SCCM	202.144	SCCM
30	%	300.0	SCCM	302.732	SCCM
40	%	400.0	SCCM	403.819	SCCM
50	%	500.0	SCCM	503.582	SCCM
60	%	600.0	SCCM	604.426	SCCM
70	%	700.0	SCCM	705.644	SCCM
80	%	800.0	SCCM	807.506	SCCM
90	%	900.0	SCCM	912.264	SCCM
100	%	1000.0	SCCM	1020.775	SCCM

Verified by: Terri Lundmark Date: 4-9-14

Computerized Gas Mixing / Dilution / Calibration Systems
Environics Inc. • 69 Industrial Park Road East • Tolland, CT 06084 • (860) 872-1111 • Fax: (860) 870-9333
World Wide Web: http://www.environics.com E-mail: info@environics.com

Environics®

Series 4040

System S/N 4446

ENVIRONICS FLOW CONTROLLER CALIBRATION SHEET

MFC # 4 Size: 100 SCCM

SERIAL NUMBER 4523500001

This flow controller was calibrated using a NIST-traceable Flow Standard. This calibration was performed with Nitrogen at a standard reference temperature and pressure of 32°F and 29.92 in. Hg. This is not performance data. This data is used by the system operating modes to improve the flow accuracy.

	Set Flow	True Flow
5 %	5.0 SCCM	5.019 SCCM
10 %	10.0 SCCM	10.322 SCCM
20 %	20.0 SCCM	20.859 SCCM
30 %	30.0 SCCM	31.261 SCCM
40 %	40.0 SCCM	41.559 SCCM
50 %	50.0 SCCM	51.783 SCCM
60 %	60.0 SCCM	61.969 SCCM
70 %	70.0 SCCM	72.021 SCCM
80 %	80.0 SCCM	82.025 SCCM
90 %	90.0 SCCM	91.997 SCCM
100 %	100.0 SCCM	102.131 SCCM

Verified by: Terrie Lundmark Date: 4-9-14

Computerized Gas Mixing / Dilution / Calibration Systems
Environics Inc. • 69 Industrial Park Road East • Tolland, CT 06084 • (860) 872-1111 • Fax: (860) 870-9333
World Wide Web: http://www.environics.com E-mail: info@environics.com

APPENDIX E

FUEL ANALYSIS RECORDS

Client: XTO Energy, Inc.
Location: Hart 1-03H
Date: November 17, 2014
Project #: xto-14-multi.ok-eng#13

Natural Gas - Fuel Analysis

Standardized to 68 deg F and 14.696 psia - EPA Standards

Gas Component		Mole (%)	Molecular[1] Weight (lb/lb-mole)	Lbs Component per Lb-Mole of Gas	Wt. % of Component	Ideal Gross[1,3] Heating Value (Btu/ft^3)	Fuel Heat Value [HHV] (Btu/SCF)	Ideal Net[1,3] Heating Value (Btu/ft^3)	Fuel Heat Value [LHV] (Btu/SCF)
Methane	CH_4	70.576	16.0430	11.32	49.09	994.85	702.12	895.75	632.19
Ethane	C_2H_6	13.696	30.0700	4.12	17.85	1,743.15	238.74	1,594.41	218.37
Propane	C_3H_8	8.194	44.0970	3.61	15.66	2,478.35	203.08	2,280.17	186.84
iso-Butane	iC_4H_{10}	0.691	58.1230	0.40	1.74	3,203.11	22.13	2,955.38	20.42
n-Butane	nC_4H_{10}	2.551	58.1230	1.48	6.43	3,213.35	81.97	2,965.62	75.65
Iso-Pentane	iC_5H_{12}	0.439	72.1500	0.32	1.37	3,940.87	17.30	3,643.50	15.99
n-Pentane	nC_5H_{12}	0.685	72.1500	0.49	2.14	3,948.75	27.05	3,648.32	24.99
Hexanes	C_6H_{14}	0.497	86.1770	0.43	1.86	4,684.54	23.28	4,337.82	21.56
Heptanes	C_7H_{16}	0.000	100.2040	0.00	0.00	5,419.94	0.00	5,023.77	0.00
Octanes	C_8H_{18}	0.000	114.2310	0.00	0.00	6,155.14	0.00	5,709.23	0.00
Carbon Dioxide	CO_2	0.878	44.0100	0.39	1.68	0.00	0.00	0.00	0.00
Nitrogen	N_2	1.793	28.0134	0.50	2.18	0.00	0.00	0.00	0.00
Hydrogen Sulfide	H_2S	0.000	34.0800	0.00	0.00	627.54	0.00	578.00	0.00
Oxygen	O_2	0.000	31.9988	0.00	0.00	0.00	0.00	0.00	0.00
Helium	He	0.000	4.0026	0.00	0.00	0.00	0.00	0.00	0.00
Hydrogen	H_2	0.000	2.0159	0.00	0.00	319.34	0.00	269.82	0.00
Totals		**100.000**		**23.07**	**100.00**	**dry**	**1,315.68**	**dry**	**1,196.01**
						wet[2,5]	**1,285.34**	**wet[2,5]**	**1,168.44**

Characteristics of Fuel Gas		
Molecular Weight of gas =	23.067	lb/lb-mole
Btu per lb. of gas[4] =	21,972.898	gross (HHV)
Btu per lb. of gas[4] =	19,974.450	net (LHV)
Density of fuel gas[2] =	0.0599	lb/cu. ft
Wt % VOC in fuel gas =	29.21	%
Specific Gravity[1] =	0.7964	

Component	Wt%
carbon	75.50
oxygen	1.22
hydrogen	21.10
nitrogen	2.18
helium	0.00
sulfur	0.00
Total	**100.00**

F-Factor (SCF dry exhaust per MMBtu [HHV]) = 8,741.46
(Based on EPA RM-19) at 68 deg F and 14.696 psia

F-Factor Calculation:

F-Factor = 1,000,000*((3.64*%H)+(1.53*%C)+(0.57*%S)+(0.14*%N)-(0.46*%O))/GCV

GCV = Gross Btu per lb. of gas (HHV)

%H, %C, %S, %N, & %O are percent weight values calculated from fuel analysis and have units of (scf/lb)/%

Density of natural gas based on specific gravity multiplied by density of air at 68 deg F and 14.696 psia.

References:

[1] ASTM D 3588
[2] Civil Engineering Reference Manual, 7th ed. - Michael R. Lindeburg
[3] Mark's Standard Handbook for Mechanical Engineers, 10th ed. - Eugene A. Avallone, Theodore Baumeister III
[4] Introduction to Fluid Mechanics, 3rd ed. - William S. Janna
[5] GPA Reference Bulletin 181-86, revised 1986, reprinted 1995

GAS TESTING AND MEASUREMENT
PETROLEUM LABORATORY
PHYSICAL TEST
GAS SURVEYS

GAS PRODUCTION SURVEYS
BACK PRESSURE TESTS
ELECTRONIC VOLUMES
CHART INTEGRATION

THURMOND-McGLOTHLIN, INC.

THE NATURAL GAS MEASUREMENT COMPANY
P.O. Box 1948 ARDMORE OK 73402
34 BROADLAWN CENTER
580-223-9632 Office / 580-223-3163 Fax

FRACTIONAL ANALYSIS *

DATE RUN: 11/13/2014

COMPONENTS		MOL %	GPM 14.65	GPM 14.73
Carbon Dioxide	CO2	0.878		
Nitrogen	N2	1.793		
Methane	C1	70.576		
Ethane	C2	13.696	3.658	3.678
Propane	C3	8.194	2.255	2.267
iso-Butane	IC4	0.691	0.226	0.227
n-Butane	NC4	2.551	0.803	0.808
iso-Pentane	IC5	0.439	0.161	0.162
n-Pentane	NC5	0.685	0.248	0.249
Hexane +	NC6+	0.497	0.217	0.218
Oxygen	O2	0.000		
		100.000		

COMPANY:	XTO-WS
PURCHASER:	
LEASE:	HART 1-3H
STATION:	MCA60008
PRESSURE:	116.2
TEMPERATURE:	71.36
CYLINDER:	XTO-WS TM2 068
ANALYSIS BY:	D CORONADO
SECURED BY:	S BROCK
DATE SAMPLED:	11/5/2014
RUN NUMBER:	ARD/GSM 8849
SAMPLE TYPE:	S

GASOLINE CONTENT 60 F

ETHANE & HEAVIER	7.568	7.609
PROPANE & HEAVIER	3.910	3.931
BUTANE & HEAVIER	1.655	1.664
PENTANE & HEAVIER	0.626	0.629

Gross Heating Value

BTU @ 60 F	14.65 PSIA	14.73 PSIA
Dry	1339.147	1346.460
Wet	1316.163	1323.350

SPECIFIC GRAVITY Z = 0.9957
REAL 0.8007

REMARKS:

H2S: 0.00 PPM
H2O: lb/mmcf
RESULTS TO: XTO-WS

*Based on GPA 2145 & 2172

Natural Gas is one of our Most Valuable and Profitable Properties. Careful Conservation and Expert Handling will pay Abundant Dividends.

APPENDIX F

FIELD DATA SHEETS

ENGINE TEST - FIELD DATA SHEET

Company:	XTO Energy, Inc.
Facility Name:	Hart F-03H
Location:	Love Co, OK
Physical Address or GPS Coordinates:	33.9700 -97.1924
Date:	11/17/14 Project Code: Xto-14-multi-tx-eng#13
Unit Make and Model:	CAT G3306 TA
Unit Number:	805637
Serial Number:	R6502346
Data Recorded By:	MP
Tested With AHI Unit(s):	Truck(s): 149 Trailer(s): 216
LDEQ Warmup/Cal Req:	On (Day/Time): — Cal (Day/Time): —

RUN INFORMATION	Run #1	Run #2 10:09:33	Run #3
Time Start (hh:mm:ss)	8:54:03	10:09:03	11:42:03
Time Stop (hh:mm:ss)	9:53:33	11:09:33	12:41:33
Barometric Pressure (in. Hg)	29.41	29.41	29.41
Ambient Temperature (°F)	36	37	39
Relative Humidity (%)	49	47	45
Stack Temperature (°F)	907	907	904
Fuel Consumption ~~(btu/hp-hr)~~ scfm	19.0	18.9	19.1
Rated Horsepower (hp)	203		
Rated Engine RPM	1800		
Load % BHP panel	127	127	127
Engine Speed RPM	1407	1403	1396
Air Manifold Pressure (psig or in. Hg)	15.6	15.5	15.6
Air Manifold Temperature (°F)	83	86	88
Suction Pressure (psig)	54	54	53
Discharge Pressure (psig)	1052	1046	1050
Engine Operating Hours	1667		
Engine Timing (degrees)	32.0	32.1	32.3

CALIBRATION	O_2 Conc.	O_2 Actual	NOx Conc.	NOx Actual	CO Conc.	CO Actual	VOC Conc.	VOC Actual
Zero Gas	0	-.05	0	.01	0	.15	0	-.02
Low Gas			60	57.94	~~200~~	~~201.70~~	40	39.94
Mid Gas	11.9	11.96	125	125.03	400	401.86	65	65.40
High Gas	20.9	21.03	~~250~~	~~251.07~~	800	803.64	100	100.34

BIAS	O_2 Zero	O_2 Mid	NOx Zero	NOx Mid	CO Zero	CO Mid	VOC Zero	VOC Mid
Initial/Run #1	-.03	11.89	.31	59.96	.13	402.08	-.10	40.08
Run #1/Run #2	0	11.92	.26	60.17	.43	400.48	-.32	39.87
Run #2/Run #3	.01	11.92	-.17	59.46	.02	396.04	-.29	40.94
Run #3/Run #4	0	11.97	-.20	58.82	.12	403.02	-.07	40.93
Run #4/Final								
Bias Gas Actual Conc.		11.9		60		400		40

CYLINDER SERIAL NUMBERS		O_2	VOC
	N2/Low	ALM043721 →	
	Mid	CC352363	—
	High	CC101517	CC157957
		NOx	CO
	N2/Low	ALM043721 →	
	Mid	AAL9030	—
	High	ALM046647 →	

NO_2 CONVERSION 8:00:13	
NO_2 Gas (ppm)	47.9
NO Reading (ppm)	2.81
NOx Reading (ppm)	51.02
Cylinder Num	ALM057038

Man. Date: ~~Mar, 2014~~ 3/7/2014

Customer Number:	—
Regulated Entity Number:	—
Permit ID:	2013-2068-NOI

REPORT INFORMATION	INSTRUMENT	SERIAL #
O_2	1440	INST-O2-0012
NOX	~~481-HL~~ 42c	INST-NX-0030 12
CO	48i	INST-CO-0016
VOC	210	INST-VC-0002
Dilutor	4040	LABS-GM-0004 / 4446

High Level Diluted Gas Validation Table		
Trial #	Diluter Output (18.0%)	Instrument Response (%)
1	18.0	18.05
2	18.0	18.06
3	18.0	18.04

Mid Level Diluted Gas Validation Table		
Trial #	Diluter Output (11.0%)	Instrument Response (%)
1	11.0	11.00
2	11.0	11.01
3	11.0	10.99

Mid Level Protocol Gas Validation Table		
Trial #	Certified Value (%)	Instrument Response (%)
1	11.9	11.90
2	11.9	11.90
3	11.9	11.92

Signature: [signature] 11/17/14