DATE: October 28, 2013

MEMORANDUM:

SUBJECT: Ethyl Corporation

FROM: Jamal Lewis

TO: FILE

Representatives of the Environmental Protection Agency (EPA), Hazardous Waste Enforcement Branch, Compliance and Enforcement Section reviewed a letter and documents submitted on November 20, 2012 and March 22, 2013, regarding the Consent Agreement and Final Order (CAFO). We have determined that Ethyl Corporation has complied with all terms and conditions of the CAFO.

Ethyl CORPORATION

330 South Fourth Street
Richmond, VA 23219
Post Office Box 2218
Richmond, VA 23218-2218
Tel: 804-788-5600

November 20, 2012

Chief
Compliance Enforcement Section (6EN-HE)
Hazardous Waste Enforcement Branch
U.S. EPA, Region 6
1445 Ross Avenue, Suite 1200
Dallas, TX 75202-2733

Manager
Waste Enforcement Section
Texas Commission on Environmental Quality
P.O. Box 13087, MC-128
Austin, TX 78711-3087

Re: Docket No. RCRA-06-2011-0957

Dear Sirs:

Enclosed please find Ethyl Corporation's "plan to prevent future disposal of hazardous waste to the Process Canal" as required by the CAFO under the above referenced Docket No.

This submittal also serves as the notice required by the CAFO of implementation of this same plan.

> "I certify that the information contained in or accompanying this submission is true, accurate and complete. I am aware that there are significant penalties for submitting false information, including the possibility of fine and imprisonment for knowing violations."

Sincerely,

Ethyl Corporation

John W. Street

John W Street

Director HSSE

Cc: H. S. Livesay, Ethyl Houston

K. L. Kirkeby, NewMarket

Al Axe, Winstead

Plan To Prevent Hazardous Waste Discharge To Ethyl Corporation Houston Plant Wastewater Discharge System

This document provides a description of Ethyl Corporation's Houston Plant focusing on its waste water discharges to Albemarle's TPDES 00492 via the Process Canal and the measures employed by Ethyl to assure its regulatory compliance. This description covers Ethyl internal outfall locations, discharges through those outfalls; both process wastewater and storm water management. Over the past, approximately four years, Ethyl has invested considerable effort updating and improving its process equipment, procedures and test methods to help minimize the risk of non-compliance. As the current practice has been effective in assuring no hazardous wastewater releases to the Process Canal over the past 3+ years, Ethyl plans to continue the current established practice; details are described below.

System Overview

Currently, there are four physical connections that feed wastewater to the Albemarle TPDES permitted treatment system via the Process Canal (which is operated by Albemarle). These include one physical connection from the Ethyl Fuel and Lubricant Additives plant on the South end of the complex (Complex includes Ethyl, Albemarle and MEMC owned facilities) and three from the Ethyl Fuel Additives Terminal operations located at the North End of the complex. A schematic of the Ethyl wastewater flows to the Process Canal is included as Attachment 1.

A. South Discharge to Process Canal

From the Fuel and Lubricant Additives portion of the Ethyl plant, waters from all activities are directed to a single discharge point which is designated MH33A. MH33A is a very large sump, 60,000 gallons capacity, with a typical average flow rate of 20 gallons per minute. This provides an average wastewater retention time of approximately 30 hours. MH33A was designed and installed to provide equalization, thereby minimizing the potential for slug loading the Process Canal with excess caustic from batch discharge from an operating unit and/or heavy floating organics from various fugitive sources. It is constructed similar to a large, three chambered API style separator and the outlet can be isolated to give positive control in the event of an emergency or process upset. A sampling system has been installed in the basin's outlet stream which includes an inline continuous pH meter and a composite sampling system. A slip stream from the discharge continuously feeds water past the pH probe. Additionally, grab samples of the discharge stream are also taken from this slip stream and pH readings are verified in the on-site lab. A composite sampler is also used to ensure that the daily loading to the Albemarle wastewater system does not exceed prescribed concentration limits.

B. **North Discharges to Process Canal**

From the Ethyl Fuel Additives Terminal there are three discharge points connected to the Process Canal. First is the T-1816 North Sump which collects rain water from the Fuels Blending pad area. This system is a batch discharge system. During a rain event significant enough to merit a discharge, a grab sample is taken from this sump and analyzed by our internal laboratory for the parameters of concern, including pH, EDC, and lead concentrations. Acceptable results are then transmitted to Albemarle, for approval prior to the batch transfer to the Process Canal via Ethyl Internal Outfall 101 as listed in Ethyl's TPDES Permit 003890.

The second connection to the Process Canal conveys storm water from all of the remaining Terminal areas process systems including the T-1865 Water Treater Area, Spheres Storage Tank Firewall, Diesel Fuel Additives unit, T-1880 Water Stripper and Fuel Additives railroad load spots (Dock Spots) located in the Dock Area. Like the T-1816 discharges, samples are taken from these areas and submitted to the Ethyl lab. They are tested for the parameters of concern including pH and lead concentrations. Once acceptable results are received the results are obtained these results are transmitted to Albemarle to obtain permission to discharge to the Process Canal. Upon approval, the transfer is begun to the Process Canal. These data are kept for 3 years. Note these waters are discharged to an Albemarle process drain and thence to the Albemarle Process Canal. The Ethyl discharge point is for this drain is currently known as Ethyl Internal Outfall 104 under Ethyl's TPDES Permit 003890.

The third Ethyl related connection in the Terminal Area to the Process Canal is a steam condensate line which collects steam condensate from Ethyl, MEMC and Enterprise Products. This is exclusively uncontaminated steam condensate and as such, no samples are presently taken by Ethyl. However, as part of a project improvement plan currently being implemented, Ethyl is removing its condensate from this line and moving it to the monitored Internal Outfall 104 listed above. Once completed Ethyl will no longer be discharging from this outlet to the Process Canal. This project is scheduled for completion prior to year end.

Verification Procedures

The procedure to ensure the reliability of this sampling system is as follows: Each morning two samples are retrieved from the auto sampler at MH33A. One is the composite sample, the other is a grab sample from this slip stream. The operator documents the field pH measurement and then takes both samples to the lab. The lab then immediately analyzes the grab sample for pH and documents the lab reading and the field measurements into a log. The composite sample is then analyzed for formaldehyde, phenol, cresol and TOC concentrations which are recorded into a log. In addition, operators are required to make periodic rounds which include checking the sampling system. These checks include ensuring that the pH on the continuous monitor is within normal limits and the pump for the slip stream is working properly. These checks are conducted multiple times per day. Instrument and electrical personnel check the calibration of the pH probe and the integrity of the system each week. Examples of these data points are included in Attachment 2. Ethyl maintains these records for 3 years.

Attachment 1

Ethyl Wastewater Flow Diagrams

TERMINAL WASTEWATER CONTRIBUTORS TO ALB. PROCESS CANAL

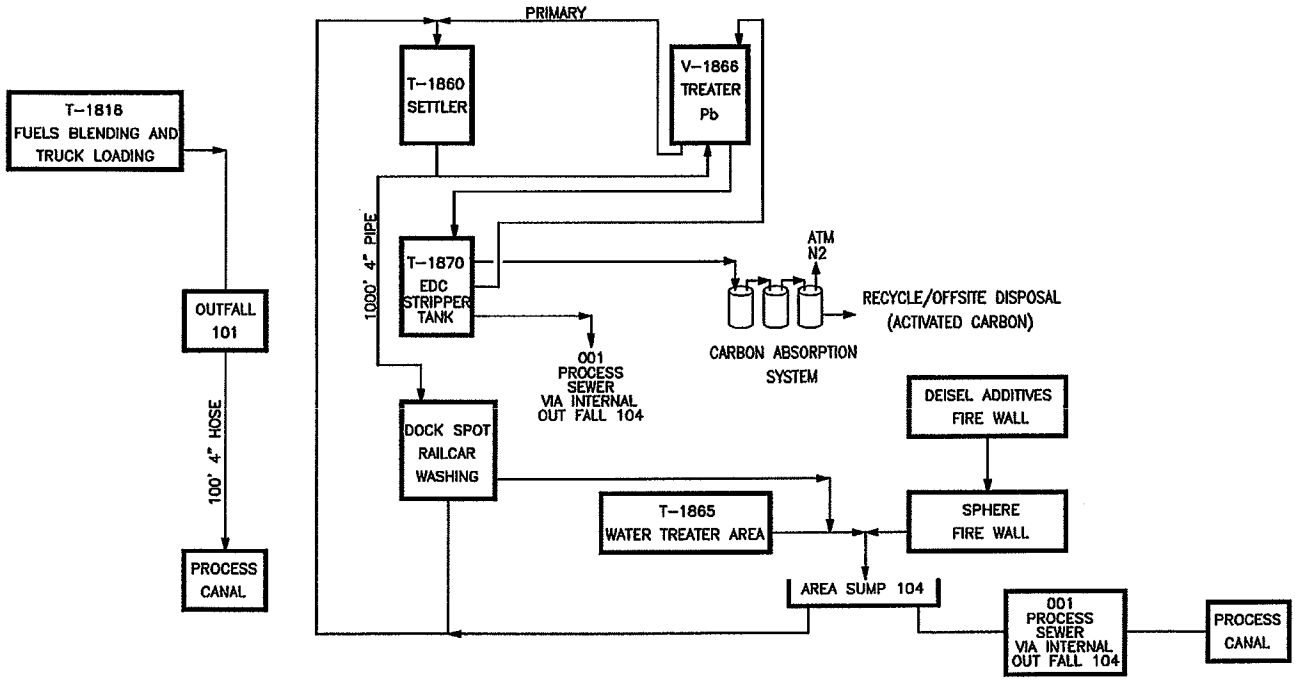

WASTEWATER CONTRIBUTORS FROM ETHYL LUBE/FUEL ADDITIVES TO ALB. PROCESS CANAL

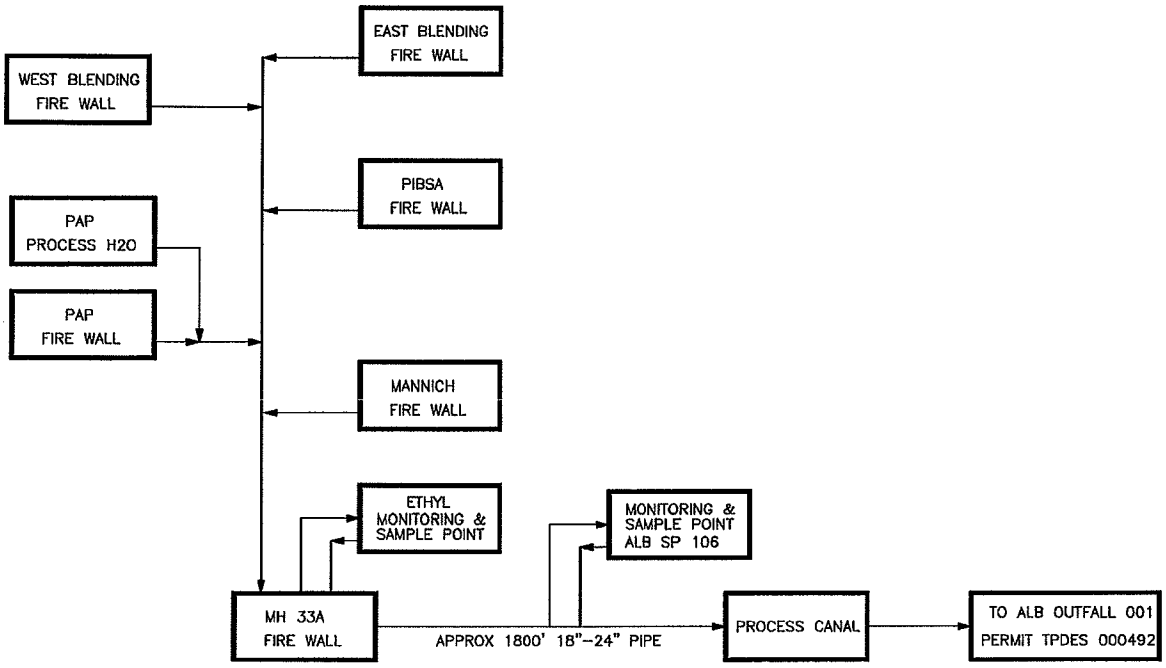

WASTEWATER CONTRIBUTORS TO ALB. PROCESS CANAL

SOUTH DISCHARGE

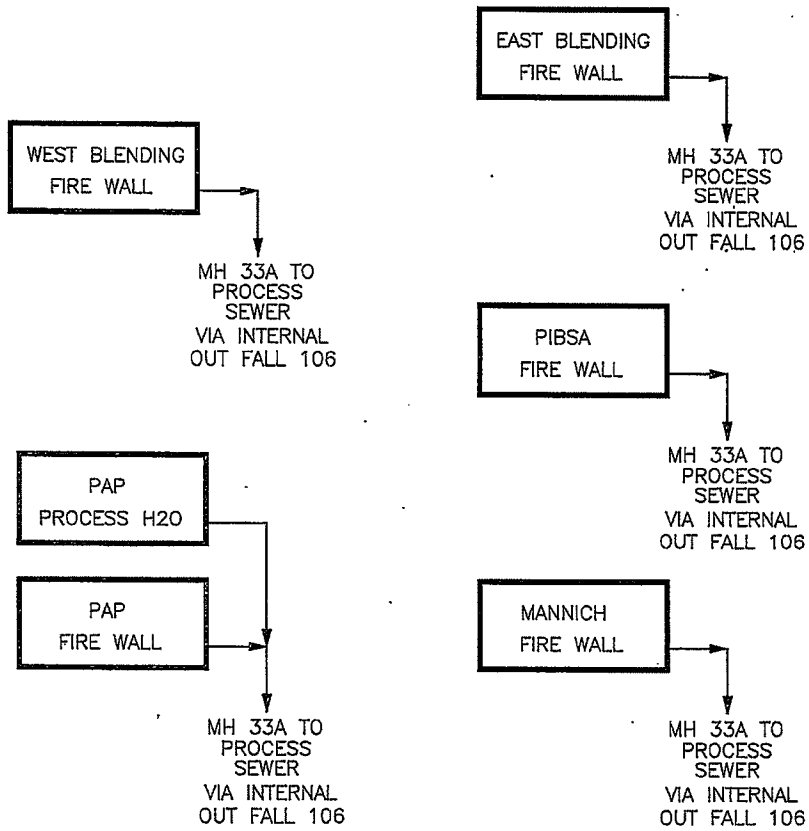

WASTEWATER CONTRIBUTORS TO ALB. PROCESS CANAL

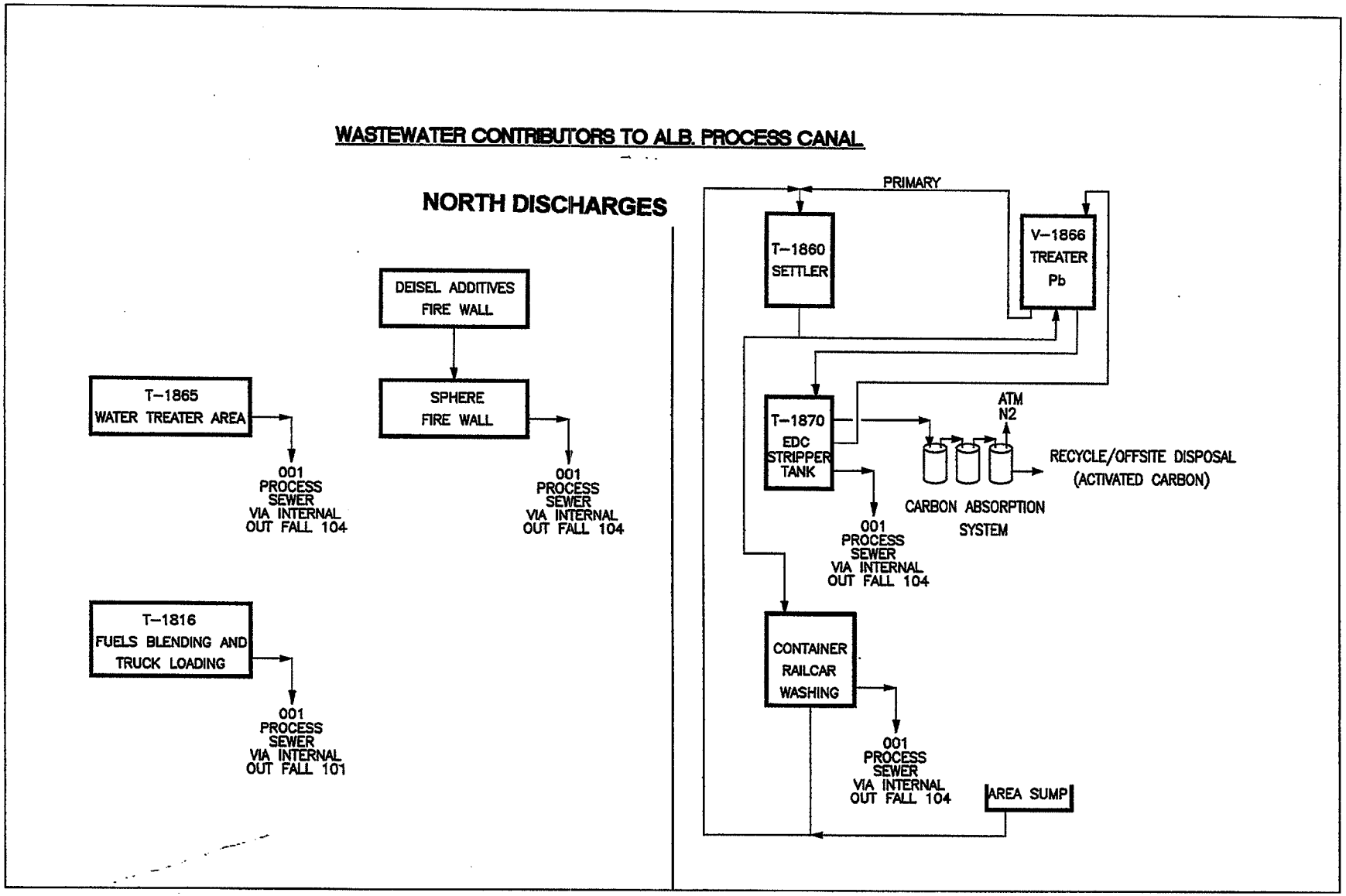

Attachment 2

Example Ethyl Monitoring Data

T-1880 Predischarge

Batch Discharge Results

Sample ID	Sample Code	Description	Collection Date	Test	Result
HO-12-000942001	150-1880-PD	C-1880_Pre-Discharge	1/12/2012 23:00	pH/920/940	8.73
HO-12-000983001	150-1880-PD	C-1880_Pre-Discharge	1/13/2012 11:00	pH/920/940	8.7
HO-12-002377001	150-1880-PD	C-1880_Pre-Discharge	2/1/2012 23:45	pH/920/940	8.85
HO-12-003531001	150-1880-PD	C-1880_Pre-Discharge	2/15/2012 21:00	pH/920/940	8.89
HO-12-004030001	150-1880-PD	C-1880_Pre-Discharge	2/21/2012 23:40	pH/920/940	8.94
HO-12-004249001	150-1880-PD	C-1880_Pre-Discharge	2/24/2012 23:50	pH/920/940	8.42
HO-12-004297001	150-1880-PD	C-1880_Pre-Discharge	2/25/2012 10:00	pH/920/940	8.58
HO-12-005127001	150-1880-PD	C-1880_Pre-Discharge	3/7/2012 7:15	pH/920/940	9.54
HO-12-005901001	150-1880-PD	C-1880_Pre-Discharge	3/17/2012 11:30	pH/920/940	9.14
HO-12-006474001	150-1880-PD	C-1880_Pre-Discharge	3/25/2012 12:15	pH/920/940	9.51
HO-12-006534001	150-1880-PD	C-1880_Pre-Discharge	3/26/2012 7:45	pH/920/940	9.4
HO-12-006572001	150-1880-PD	C-1880_Pre-Discharge	3/26/2012 19:30	pH/920/940	9.33
HO-12-006617001	150-1880-PD	C-1880_Pre-Discharge	3/27/2012 8:00	pH/920/940	9.14
HO-12-009608001	150-1880-PD	C-1880_Pre-Discharge	5/11/2012 7:00	pH/920/940	8.95
HO-12-009762001	150-1880-PD	C-1880_Pre-Discharge	5/14/2012 3:45	pH/920/940	8.97
HO-12-010789001	150-1880-PD	C-1880_Pre-Discharge	5/26/2012 22:30	pH/920/940	9.3
HO-12-014919001	150-1880-PD	C-1880_Pre-Discharge	7/15/2012 14:50	pH/920/940	9.09
HO-12-015165001	150-1880-PD	C-1880_Pre-Discharge	7/18/2012 0:15	pH/920/940	9.1
HO-12-015557001	150-1880-PD	C-1880_Pre-Discharge	7/23/2012 2:00	pH/920/940	9.13
HO-12-017207001	150-1880-PD	C-1880_Pre-Discharge	8/12/2012 23:00	pH/920/940	9.21
HO-12-017722001	150-1880-PD	C-1880_Pre-Discharge	8/18/2012 23:50	pH/920/940	9.18
HO-12-017778001	150-1880-PD	C-1880_Pre-Discharge	8/19/2012 22:15	pH/920/940	9.08
HO-12-017802001	150-1880-PD	C-1880_Pre-Discharge	8/20/2012 8:40	pH/920/940	9.3
HO-12-017887001	150-1880-PD	C-1880_Pre-Discharge	8/21/2012 7:30	pH/920/940	9.17
HO-12-018084001	150-1880-PD	C-1880_Pre-Discharge	8/24/2012 13:00	pH/920/940	9.08
HO-12-018106001	150-1880-PD	C-1880_Pre-Discharge	8/24/2012 22:30	pH/920/940	9.2
HO-12-019302001	150-1880-PD	C-1880_Pre-Discharge	9/8/2012 23:15	pH/920/940	9.4
HO-12-019777001	150-1880-PD	C-1880_Pre-Discharge	9/15/2012 11:55	pH/920/940	9.94
HO-12-020158001	150-1880-PD	C-1880_Pre-Discharge	9/20/2012 7:00	pH/920/940	9.73
HO-12-020210001	150-1880-PD	C-1880_Pre-Discharge	9/20/2012 22:30	pH/920/940	9.89
HO-12-020680001	150-1880-PD	C-1880_Pre-Discharge	9/25/2012 23:15	pH/920/940	9.05
HO-12-020896001	150-1880-PD	C-1880_Pre-Discharge	9/28/2012 12:30	pH/920/940	9.13
HO-12-020937001	150-1880-PD	C-1880_Pre-Discharge	9/28/2012 23:30	pH/920/940	9.2
HO-12-020996001	150-1880-PD	C-1880_Pre-Discharge	9/29/2012 14:00	pH/920/940	Not_Tested
HO-12-021063001	150-1880-PD	C-1880_Pre-Discharge	9/30/2012 10:45	pH/920/940	9.3
HO-12-021140001	150-1880-PD	C-1880_Pre-Discharge	10/1/2012 15:30	pH/920/940	9.06
HO-12-021353001	150-1880-PD	C-1880_Pre-Discharge	10/4/2012 22:00	pH/920/940	8.79
HO-12-021453001	150-1880-PD	C-1880_Pre-Discharge	10/6/2012 14:00	pH/920/940	8.8
HO-12-022204001	150-1880-PD	C-1880_Pre-Discharge	10/18/2012 0:50	pH/920/940	8.64
HO-12-022228001	150-1880-PD	C-1880_Pre-Discharge	10/18/2012 9:25	pH/920/940	8.5

HO-12-022316001	150-1880-PD	C-1880_Pre-Discharge	10/19/2012 15:10	pH/920/940	8.62
HO-12-023827001	150-1880-PD	C-1880_Pre-Discharge	11/10/2012 13:30	pH/920/940	10.02
HO-12-023895001	150-1880-PD	C-1880_Pre-Discharge	11/11/2012 10:00	pH/920/940	9.87
HO-12-024256001	150-1880-PD	C-1880_Pre-Discharge	11/15/2012 21:45	pH/920/940	9.74
HO-12-024439001	150-1880-PD	C-1880_Pre-Discharge	11/18/2012 7:30	pH/920/940	8.88
HO-12-024507001	150-1880-PD	C-1880_Pre-Discharge	11/19/2012 7:50	pH/920/940	8.84
HO-12-024549001	150-1880-PD	C-1880_Pre-Discharge	11/19/2012 23:00	pH/920/940	8.63

*Batch discharges suitable for discharge

Ethyl MH33A Last discharge point to Alb SP106

Sample ID	Sample Code	Description	Collection Date	Test	Result
HO-12-000023001	150-MH33A	Man_Hole_33A	1/1/2012 9:15	pH	7.57
HO-12-000076001	150-MH33A	Man_Hole_33A	1/2/2012 5:50	pH	7.63
HO-12-000141001	150-MH33A	Man_Hole_33A	1/3/2012 8:00	pH	9.43
HO-12-000199001	150-MH33A	Man_Hole_33A	1/4/2012 6:53	pH	9.27
HO-12-000272001	150-MH33A	Man_Hole_33A	1/5/2012 8:06	pH	7.43
HO-12-000371001	150-MH33A	Man_Hole_33A	1/6/2012 7:14	pH	9.6
HO-12-000466001	150-MH33A	Man_Hole_33A	1/7/2012 11:00	pH	8.25
HO-12-000554001	150-MH33A	Man_Hole_33A	1/8/2012 7:45	pH	9.8
HO-12-000622001	150-MH33A	Man_Hole_33A	1/9/2012 7:33	pH	9
HO-12-000733001	150-MH33A	Man_Hole_33A	1/10/2012 8:09	pH	10.03
HO-12-000818001	150-MH33A	Man_Hole_33A	1/11/2012 8:30	pH	9.18
HO-12-000861001	150-MH33A	Man_Hole_33A	1/11/2012 18:35	pH	9
HO-12-000899001	150-MH33A	Man_Hole_33A	1/12/2012 8:18	pH	8.24
HO-12-000992001	150-MH33A	Man_Hole_33A	1/13/2012 10:05	pH	7.7
HO-12-001060001	150-MH33A	Man_Hole_33A	1/14/2012 6:30	pH	7.99
HO-12-001156001	150-MH33A	Man_Hole_33A	1/15/2012 10:40	pH	9.58
HO-12-001229001	150-MH33A	Man_Hole_33A	1/16/2012 7:35	pH	9.81
HO-12-001333001	150-MH33A	Man_Hole_33A	1/17/2012 8:50	pH	7.75
HO-12-001407001	150-MH33A	Man_Hole_33A	1/18/2012 8:00	pH	7.9
HO-12-001482001	150-MH33A	Man_Hole_33A	1/19/2012 6:19	pH	9.92
HO-12-001559001	150-MH33A	Man_Hole_33A	1/20/2012 5:20	pH	9.7
HO-12-001628001	150-MH33A	Man_Hole_33A	1/21/2012 7:08	pH	9.56
HO-12-001683001	150-MH33A	Man_Hole_33A	1/22/2012 8:15	pH	9.48
HO-12-001748001	150-MH33A	Man_Hole_33A	1/23/2012 7:10	pH	9.37
HO-12-001829001	150-MH33A	Man_Hole_33A	1/24/2012 5:15	pH	7.56
HO-12-001909001	150-MH33A	Man_Hole_33A	1/25/2012 7:03	pH	7.52
HO-12-001970001	150-MH33A	Man_Hole_33A	1/26/2012 6:53	pH	7.09
HO-12-002109001	150-MH33A	Man_Hole_33A	1/28/2012 8:07	pH	8.11
HO-12-002147001	150-MH33A	Man_Hole_33A	1/29/2012 7:10	pH	10.7
HO-12-002218001	150-MH33A	Man_Hole_33A	1/30/2012 7:05	pH	8.86
HO-12-002316001	150-MH33A	Man_Hole_33A	1/31/2012 7:15	pH	7.79
HO-12-002412001	150-MH33A	Man_Hole_33A	2/1/2012 10:30	pH	7.95
HO-12-002498001	150-MH33A	Man_Hole_33A	2/2/2012 9:10	pH	9.89
HO-12-002575001	150-MH33A	Man_Hole_33A	2/3/2012 10:15	pH	9.99
HO-12-002651001	150-MH33A	Man_Hole_33A	2/4/2012 10:10	pH	7.43
HO-12-002736001	150-MH33A	Man_Hole_33A	2/5/2012 7:30	pH	9.9
HO-12-002831001	150-MH33A	Man_Hole_33A	2/6/2012 13:00	pH	8.86
HO-12-002891001	150-MH33A	Man_Hole_33A	2/7/2012 7:57	pH	9.14
HO-12-002996001	150-MH33A	Man_Hole_33A	2/8/2012 9:12	pH	8.4
HO-12-003056001	150-MH33A	Man_Hole_33A	2/9/2012 8:29	pH	9.18

HO-12-003114001	150-MH33A	Man_Hole_33A	2/10/2012 6:00	pH	9.16
HO-12-003182001	150-MH33A	Man_Hole_33A	2/11/2012 6:30	pH	7.57
HO-12-003250001	150-MH33A	Man_Hole_33A	2/12/2012 6:05	pH	7.78
HO-12-003317001	150-MH33A	Man_Hole_33A	2/13/2012 9:00	pH	7.4
HO-12-003409001	150-MH33A	Man_Hole_33A	2/14/2012 9:45	pH	7.47
HO-12-003484001	150-MH33A	Man_Hole_33A	2/15/2012 5:30	pH	7.41
HO-12-003585001	150-MH33A	Man_Hole_33A	2/16/2012 9:30	pH	9.27
HO-12-003667001	150-MH33A	Man_Hole_33A	2/17/2012 6:30	pH	9.28
HO-12-003774001	150-MH33A	Man_Hole_33A	2/18/2012 7:38	pH	9.16
HO-12-003834001	150-MH33A	Man_Hole_33A	2/19/2012 7:21	pH	9.56
HO-12-003929001	150-MH33A	Man_Hole_33A	2/20/2012 10:15	pH	8.48
HO-12-004001001	150-MH33A	Man_Hole_33A	2/21/2012 9:00	pH	9.2
HO-12-004070001	150-MH33A	Man_Hole_33A	2/22/2012 10:05	pH	8.3
HO-12-004200001	150-MH33A	Man_Hole_33A	2/24/2012 9:15	pH	8.32
HO-12-004289001	150-MH33A	Man_Hole_33A	2/25/2012 9:01	pH	7.45
HO-12-004349001	150-MH33A	Man_Hole_33A	2/26/2012 8:00	pH	7.74
HO-12-004434001	150-MH33A	Man_Hole_33A	2/27/2012 7:15	pH	8.3
HO-12-004526001	150-MH33A	Man_Hole_33A	2/28/2012 6:45	pH	9.72
HO-12-004612001	150-MH33A	Man_Hole_33A	2/29/2012 9:00	pH	9.48
HO-12-004683001	150-MH33A	Man_Hole_33A	3/1/2012 8:00	pH	9.64
HO-12-004759001	150-MH33A	Man_Hole_33A	3/2/2012 7:40	pH	8.22
HO-12-004816001	150-MH33A	Man_Hole_33A	3/3/2012 7:00	pH	7.37
HO-12-004899001	150-MH33A	Man_Hole_33A	3/4/2012 9:20	pH	7.48
HO-12-004962001	150-MH33A	Man_Hole_33A	3/5/2012 8:15	pH	7.8
HO-12-005048001	150-MH33A	Man_Hole_33A	3/6/2012 9:00	pH	8.13
HO-12-005128001	150-MH33A	Man_Hole_33A	3/7/2012 8:30	pH	9.01
HO-12-005197001	150-MH33A	Man_Hole_33A	3/8/2012 8:50	pH	9.1
HO-12-005276001	150-MH33A	Man_Hole_33A	3/9/2012 6:15	pH	9.96
HO-12-005350001	150-MH33A	Man_Hole_33A	3/10/2012 8:50	pH	9.84
HO-12-005411001	150-MH33A	Man_Hole_33A	3/11/2012 6:10	pH	9.18
HO-12-005489001	150-MH33A	Man_Hole_33A	3/12/2012 9:20	pH	8.82
HO-12-005578001	150-MH33A	Man_Hole_33A	3/13/2012 7:29	pH	8.96
HO-12-005642001	150-MH33A	Man_Hole_33A	3/14/2012 7:30	pH	9.33
HO-12-005727001	150-MH33A	Man_Hole_33A	3/15/2012 8:20	pH	9.33
HO-12-005827001	150-MH33A	Man_Hole_33A	3/16/2012 7:00	pH	8.41
HO-12-005884001	150-MH33A	Man_Hole_33A	3/17/2012 6:37	pH	8.02
HO-12-005949001	150-MH33A	Man_Hole_33A	3/18/2012 7:28	pH	7.19
HO-12-006014001	150-MH33A	Man_Hole_33A	3/19/2012 6:25	pH	7.88
HO-12-006074001	150-MH33A	Man_Hole_33A	3/20/2012 6:00	pH	9.24
HO-12-006154001	150-MH33A	Man_Hole_33A	3/21/2012 7:10	pH	8.67
HO-12-006244001	150-MH33A	Man_Hole_33A	3/22/2012 5:40	pH	8.6
HO-12-006331001	150-MH33A	Man_Hole_33A	3/23/2012 7:29	pH	8.89
HO-12-006400001	150-MH33A	Man_Hole_33A	3/24/2012 7:15	pH	9.44
HO-12-006465001	150-MH33A	Man_Hole_33A	3/25/2012 9:58	pH	8.2
HO-12-006543001	150-MH33A	Man_Hole_33A	3/26/2012 7:30	pH	8.85
HO-12-006614001	150-MH33A	Man_Hole_33A	3/27/2012 7:30	pH	8.55
HO-12-006699001	150-MH33A	Man_Hole_33A	3/28/2012 7:35	pH	7.42

HO-12-006761001	150-MH33A	Man_Hole_33A	3/29/2012 9:16	pH	7.48
HO-12-006823001	150-MH33A	Man_Hole_33A	3/30/2012 9:55	pH	7.55
HO-12-006862001	150-MH33A	Man_Hole_33A	3/31/2012 15:15	pH	7.1
HO-12-006868001	150-MH33A	Man_Hole_33A	4/1/2012 15:45	pH	8.07
HO-12-006889001	150-MH33A	Man_Hole_33A	4/2/2012 8:50	pH	5.1
HO-12-006937001	150-MH33A	Man_Hole_33A	4/3/2012 9:30	pH	6.56
HO-12-006979001	150-MH33A	Man_Hole_33A	4/4/2012 8:30	pH	6.6
HO-12-007024001	150-MH33A	Man_Hole_33A	4/5/2012 9:25	pH	6.9
HO-12-007084001	150-MH33A	Man_Hole_33A	4/6/2012 5:25	pH	10.15
HO-12-007156001	150-MH33A	Man_Hole_33A	4/7/2012 8:30	pH	9.42
HO-12-007210001	150-MH33A	Man_Hole_33A	4/8/2012 6:30	pH	9.89
HO-12-007292001	150-MH33A	Man_Hole_33A	4/9/2012 8:15	pH	11.19
HO-12-007371001	150-MH33A	Man_Hole_33A	4/10/2012 7:00	pH	9.65
HO-12-007450001	150-MH33A	Man_Hole_33A	4/11/2012 7:10	pH	8.63
HO-12-007530001	150-MH33A	Man_Hole_33A	4/12/2012 6:45	pH	9.08
HO-12-007614001	150-MH33A	Man_Hole_33A	4/13/2012 6:45	pH	8.9
HO-12-007721001	150-MH33A	Man_Hole_33A	4/14/2012 17:14	pH	7.67
HO-12-007777001	150-MH33A	Man_Hole_33A	4/15/2012 12:05	pH	8.7
HO-12-007854001	150-MH33A	Man_Hole_33A	4/16/2012 7:15	pH	9.09
HO-12-007909001	150-MH33A	Man_Hole_33A	4/17/2012 6:30	pH	7.7
HO-12-007994001	150-MH33A	Man_Hole_33A	4/18/2012 6:00	pH	8.67
HO-12-008088001	150-MH33A	Man_Hole_33A	4/19/2012 6:35	pH	8.14
HO-12-008164001	150-MH33A	Man_Hole_33A	4/20/2012 10:00	pH	8.12
HO-12-008216001	150-MH33A	Man_Hole_33A	4/21/2012 9:39	pH	7.72
HO-12-008258001	150-MH33A	Man_Hole_33A	4/22/2012 9:30	pH	7.92
HO-12-008306001	150-MH33A	Man_Hole_33A	4/23/2012 7:05	pH	8.06
HO-12-008373001	150-MH33A	Man_Hole_33A	4/24/2012 7:50	pH	9.74
HO-12-008438001	150-MH33A	Man_Hole_33A	4/25/2012 9:00	pH	9.96
HO-12-008501001	150-MH33A	Man_Hole_33A	4/26/2012 7:10	pH	9.07
HO-12-008557001	150-MH33A	Man_Hole_33A	4/27/2012 8:00	pH	8.18
HO-12-008609001	150-MH33A	Man_Hole_33A	4/28/2012 7:33	pH	8.19
HO-12-008674001	150-MH33A	Man_Hole_33A	4/29/2012 11:00	pH	7.39
HO-12-008714001	150-MH33A	Man_Hole_33A	4/30/2012 7:10	pH	7.45
HO-12-008820001	150-MH33A	Man_Hole_33A	5/1/2012 8:40	pH	8.7
HO-12-008886001	150-MH33A	Man_Hole_33A	5/2/2012 7:00	pH	9.6
HO-12-008986001	150-MH33A	Man_Hole_33A	5/3/2012 8:35	pH	8.91
HO-12-009050001	150-MH33A	Man_Hole_33A	5/4/2012 7:30	pH	8.99
HO-12-009135001	150-MH33A	Man_Hole_33A	5/5/2012 9:45	pH	8.64
HO-12-009202001	150-MH33A	Man_Hole_33A	5/6/2012 6:05	pH	8.62
HO-12-009289001	150-MH33A	Man_Hole_33A	5/7/2012 8:40	pH	8.85
HO-12-009379001	150-MH33A	Man_Hole_33A	5/8/2012 7:57	pH	8.59
HO-12-009470001	150-MH33A	Man_Hole_33A	5/9/2012 8:30	pH	9.55
HO-12-009544001	150-MH33A	Man_Hole_33A	5/10/2012 7:32	pH	9.78
HO-12-009602001	150-MH33A	Man_Hole_33A	5/11/2012 6:30	pH	9.15
HO-12-009672001	150-MH33A	Man_Hole_33A	5/12/2012 7:45	pH	9.8
HO-12-009731001	150-MH33A	Man_Hole_33A	5/13/2012 7:30	pH	9.92
HO-12-009778001	150-MH33A	Man_Hole_33A	5/14/2012 6:00	pH	8.09

HO-12-009941001	150-MH33A	Man_Hole_33A	5/15/2012 6:10	pH	8.71
HO-12-010003001	150-MH33A	Man_Hole_33A	5/16/2012 6:45	pH	7.55
HO-12-010090001	150-MH33A	Man_Hole_33A	5/17/2012 5:15	pH	8.42
HO-12-010158001	150-MH33A	Man_Hole_33A	5/18/2012 7:25	pH	9.93
HO-12-010243001	150-MH33A	Man_Hole_33A	5/19/2012 9:30	pH	9.84
HO-12-010289001	150-MH33A	Man_Hole_33A	5/20/2012 6:25	pH	9.67
HO-12-010365001	150-MH33A	Man_Hole_33A	5/21/2012 7:10	pH	8.49
HO-12-010454001	150-MH33A	Man_Hole_33A	5/22/2012 6:30	pH	9.66
HO-12-010536001	150-MH33A	Man_Hole_33A	5/23/2012 6:50	pH	9.39
HO-12-010624001	150-MH33A	Man_Hole_33A	5/24/2012 6:25	pH	9.29
HO-12-010691001	150-MH33A	Man_Hole_33A	5/25/2012 7:30	pH	9.89
HO-12-010761001	150-MH33A	Man_Hole_33A	5/26/2012 7:30	pH	7.62
HO-12-010828001	150-MH33A	Man_Hole_33A	5/27/2012 11:01	pH	9.5
HO-12-010907001	150-MH33A	Man_Hole_33A	5/28/2012 7:28	pH	8.3
HO-12-011003001	150-MH33A	Man_Hole_33A	5/29/2012 5:15	pH	9.15
HO-12-011078001	150-MH33A	Man_Hole_33A	5/30/2012 5:40	pH	9.92
HO-12-011151001	150-MH33A	Man_Hole_33A	5/31/2012 6:15	pH	9.28
HO-12-011225001	150-MH33A	Man_Hole_33A	6/1/2012 6:35	pH	9.66
HO-12-011318001	150-MH33A	Man_Hole_33A	6/2/2012 6:45	pH	8.13
HO-12-011378001	150-MH33A	Man_Hole_33A	6/3/2012 9:25	pH	7.83
HO-12-011461001	150-MH33A	Man_Hole_33A	6/4/2012 8:50	pH	9.08
HO-12-011549001	150-MH33A	Man_Hole_33A	6/5/2012 6:36	pH	9.41
HO-12-011641001	150-MH33A	Man_Hole_33A	6/6/2012 6:35	pH	8
HO-12-011727001	150-MH33A	Man_Hole_33A	6/7/2012 6:20	pH	8.03
HO-12-011820001	150-MH33A	Man_Hole_33A	6/8/2012 6:00	pH	8.94
HO-12-011902001	150-MH33A	Man_Hole_33A	6/9/2012 10:12	pH	7.67
HO-12-011966001	150-MH33A	Man_Hole_33A	6/10/2012 6:25	pH	8.71
HO-12-012050001	150-MH33A	Man_Hole_33A	6/11/2012 5:35	pH	8.51
HO-12-012145001	150-MH33A	Man_Hole_33A	6/12/2012 6:30	pH	7.9
HO-12-012230001	150-MH33A	Man_Hole_33A	6/13/2012 6:25	pH	7.58
HO-12-012317001	150-MH33A	Man_Hole_33A	6/14/2012 7:30	pH	7.5
HO-12-012377001	150-MH33A	Man_Hole_33A	6/15/2012 7:50	pH	8.16
HO-12-012444001	150-MH33A	Man_Hole_33A	6/16/2012 9:20	pH	9.53
HO-12-012506001	150-MH33A	Man_Hole_33A	6/17/2012 8:30	pH	9.85
HO-12-012583001	150-MH33A	Man_Hole_33A	6/18/2012 6:45	pH	9.85
HO-12-012672001	150-MH33A	Man_Hole_33A	6/19/2012 6:30	pH	9.05
HO-12-012729001	150-MH33A	Man_Hole_33A	6/20/2012 5:15	pH	8.1
HO-12-012800001	150-MH33A	Man_Hole_33A	6/21/2012 7:15	pH	7.79
HO-12-012863001	150-MH33A	Man_Hole_33A	6/22/2012 6:06	pH	8.52
HO-12-012873001	150-MH33A	Man_Hole_33A	6/22/2012 9:32	pH	8.52
HO-12-012948001	150-MH33A	Man_Hole_33A	6/23/2012 6:03	pH	8.67
HO-12-013008001	150-MH33A	Man_Hole_33A	6/24/2012 6:03	pH	9.78
HO-12-013085001	150-MH33A	Man_Hole_33A	6/25/2012 6:04	pH	9.68
HO-12-013190001	150-MH33A	Man_Hole_33A	6/26/2012 6:03	pH	8.73
HO-12-013308001	150-MH33A	Man_Hole_33A	6/27/2012 6:06	pH	9.53
HO-12-013379001	150-MH33A	Man_Hole_33A	6/28/2012 5:20	pH	8.69
HO-12-013476001	150-MH33A	Man_Hole_33A	6/29/2012 8:40	pH	9.84

HO-12-013540001	150-MH33A	Man_Hole_33A	6/30/2012 6:03	pH	8.22
HO-12-013626001	150-MH33A	Man_Hole_33A	7/1/2012 6:05	pH	8.08
HO-12-013722001	150-MH33A	Man_Hole_33A	7/2/2012 6:04	pH	8.11
HO-12-013828001	150-MH33A	Man_Hole_33A	7/3/2012 6:04	pH	8.51
HO-12-013916001	150-MH33A	Man_Hole_33A	7/4/2012 6:05	pH	10.16
HO-12-013998001	150-MH33A	Man_Hole_33A	7/5/2012 6:03	pH	9.81
HO-12-014065001	150-MH33A	Man_Hole_33A	7/6/2012 6:30	pH	9.74
HO-12-014141001	150-MH33A	Man_Hole_33A	7/7/2012 6:05	pH	9.5
HO-12-014206001	150-MH33A	Man_Hole_33A	7/8/2012 6:04	pH	9.08
HO-12-014271001	150-MH33A	Man_Hole_33A	7/9/2012 6:06	pH	8.21
HO-12-014355001	150-MH33A	Man_Hole_33A	7/10/2012 6:03	pH	7.64
HO-12-014443001	150-MH33A	Man_Hole_33A	7/11/2012 8:55	pH	7.3
HO-12-014489001	150-MH33A	Man_Hole_33A	7/12/2012 6:04	pH	8.5
HO-12-014580001	150-MH33A	Man_Hole_33A	7/13/2012 6:06	pH	8.67
HO-12-014732001	150-MH33A	Man_Hole_33A	7/14/2012 6:03	pH	7.94
HO-12-014891001	150-MH33A	Man_Hole_33A	7/15/2012 6:03	pH	8.94
HO-12-014994001	150-MH33A	Man_Hole_33A	7/16/2012 6:03	pH	8.3
HO-12-015011001	150-MH33A	Man_Hole_33A	7/16/2012 9:00	pH	8.3
HO-12-015088001	150-MH33A	Man_Hole_33A	7/17/2012 6:06	pH	8.06
HO-12-015181001	150-MH33A	Man_Hole_33A	7/18/2012 6:05	pH	8.66
HO-12-015262001	150-MH33A	Man_Hole_33A	7/19/2012 6:05	pH	9.81
HO-12-015327001	150-MH33A	Man_Hole_33A	7/20/2012 6:05	pH	9.99
HO-12-015412001	150-MH33A	Man_Hole_33A	7/21/2012 6:06	pH	9.85
HO-12-015488001	150-MH33A	Man_Hole_33A	7/22/2012 6:06	pH	8.72
HO-12-015570001	150-MH33A	Man_Hole_33A	7/23/2012 6:03	pH	7.74
HO-12-015649001	150-MH33A	Man_Hole_33A	7/24/2012 6:05	pH	8.14
HO-12-015798001	150-MH33A	Man_Hole_33A	7/26/2012 6:07	pH	8.99
HO-12-015865001	150-MH33A	Man_Hole_33A	7/27/2012 7:00	pH	9.23
HO-12-015931001	150-MH33A	Man_Hole_33A	7/28/2012 7:40	pH	8.44
HO-12-015999001	150-MH33A	Man_Hole_33A	7/29/2012 7:30	pH	9.51
HO-12-016070001	150-MH33A	Man_Hole_33A	7/30/2012 9:45	pH	8.61
HO-12-016159001	150-MH33A	Man_Hole_33A	7/31/2012 10:15	pH	9.12
HO-12-016212001	150-MH33A	Man_Hole_33A	8/1/2012 6:13	pH	7.7
HO-12-016279001	150-MH33A	Man_Hole_33A	8/2/2012 4:45	pH	9.07
HO-12-016372001	150-MH33A	Man_Hole_33A	8/3/2012 7:15	pH	7.81
HO-12-016470001	150-MH33A	Man_Hole_33A	8/4/2012 6:10	pH	8.69
HO-12-016546001	150-MH33A	Man_Hole_33A	8/5/2012 9:12	pH	8.2
HO-12-016620001	150-MH33A	Man_Hole_33A	8/6/2012 10:27	pH	7.5
HO-12-016709001	150-MH33A	Man_Hole_33A	8/7/2012 8:00	pH	9
HO-12-016821001	150-MH33A	Man_Hole_33A	8/8/2012 14:55	pH	9.7
HO-12-016932001	150-MH33A	Man_Hole_33A	8/9/2012 13:20	pH	8.48
HO-12-017026001	150-MH33A	Man_Hole_33A	8/10/2012 9:00	pH	8.91
HO-12-017111001	150-MH33A	Man_Hole_33A	8/11/2012 8:55	pH	8.94
HO-12-017168001	150-MH33A	Man_Hole_33A	8/12/2012 8:25	pH	7.79
HO-12-017246001	150-MH33A	Man_Hole_33A	8/13/2012 7:00	pH	9.71
HO-12-017342001	150-MH33A	Man_Hole_33A	8/14/2012 7:25	pH	8.79
HO-12-017424001	150-MH33A	Man_Hole_33A	8/15/2012 7:45	pH	7.92

HO-12-017525001	150-MH33A	Man_Hole_33A	8/16/2012 9:40	pH	7.77
HO-12-017589001	150-MH33A	Man_Hole_33A	8/17/2012 7:39	pH	8.36
HO-12-017673001	150-MH33A	Man_Hole_33A	8/18/2012 6:30	pH	9.21
HO-12-017752001	150-MH33A	Man_Hole_33A	8/19/2012 9:15	pH	9.58
HO-12-017804001	150-MH33A	Man_Hole_33A	8/20/2012 9:00	pH	8.25
HO-12-017891001	150-MH33A	Man_Hole_33A	8/21/2012 10:42	pH	8.08
HO-12-017962001	150-MH33A	Man_Hole_33A	8/22/2012 9:49	pH	8.01
HO-12-018019001	150-MH33A	Man_Hole_33A	8/23/2012 12:20	pH	7.62
HO-12-018062001	150-MH33A	Man_Hole_33A	8/24/2012 7:50	pH	7.56
HO-12-018141001	150-MH33A	Man_Hole_33A	8/25/2012 6:00	pH	7.39
HO-12-018209001	150-MH33A	Man_Hole_33A	8/26/2012 6:40	pH	7.49
HO-12-018305001	150-MH33A	Man_Hole_33A	8/27/2012 7:55	pH	7.51
HO-12-018403001	150-MH33A	Man_Hole_33A	8/28/2012 8:45	pH	7.77
HO-12-018480001	150-MH33A	Man_Hole_33A	8/29/2012 6:20	pH	9.03
HO-12-018557001	150-MH33A	Man_Hole_33A	8/30/2012 7:00	pH	9.34
HO-12-018656001	150-MH33A	Man_Hole_33A	8/31/2012 7:00	pH	9.09
HO-12-018741001	150-MH33A	Man_Hole_33A	9/1/2012 9:25	pH	8.79
HO-12-018788001	150-MH33A	Man_Hole_33A	9/2/2012 7:05	pH	9.64
HO-12-018862001	150-MH33A	Man_Hole_33A	9/3/2012 8:20	pH	8
HO-12-018938001	150-MH33A	Man_Hole_33A	9/4/2012 7:30	pH	8
HO-12-019012001	150-MH33A	Man_Hole_33A	9/5/2012 5:45	pH	7.32
HO-12-019108001	150-MH33A	Man_Hole_33A	9/6/2012 7:40	pH	7.5
HO-12-019167001	150-MH33A	Man_Hole_33A	9/7/2012 7:32	pH	9.4
HO-12-019263001	150-MH33A	Man_Hole_33A	9/8/2012 8:47	pH	9.6
HO-12-019337001	150-MH33A	Man_Hole_33A	9/9/2012 7:55	pH	8.59
HO-12-019394001	150-MH33A	Man_Hole_33A	9/10/2012 6:45	pH	8.84
HO-12-019481001	150-MH33A	Man_Hole_33A	9/11/2012 7:28	pH	8.38
HO-12-019558001	150-MH33A	Man_Hole_33A	9/12/2012 6:00	pH	7.27
HO-12-019632001	150-MH33A	Man_Hole_33A	9/13/2012 6:30	pH	7.32
HO-12-019688001	150-MH33A	Man_Hole_33A	9/14/2012 6:00	pH	7.32
HO-12-019767001	150-MH33A	Man_Hole_33A	9/15/2012 6:30	pH	8.98
HO-12-019832001	150-MH33A	Man_Hole_33A	9/16/2012 7:30	pH	7.69
HO-12-019903001	150-MH33A	Man_Hole_33A	9/17/2012 8:47	pH	9.32
HO-12-019997001	150-MH33A	Man_Hole_33A	9/18/2012 8:20	pH	8.38
HO-12-020090001	150-MH33A	Man_Hole_33A	9/19/2012 13:15	pH	9.69
HO-12-020166001	150-MH33A	Man_Hole_33A	9/20/2012 6:30	pH	9.7
HO-12-020247001	150-MH33A	Man_Hole_33A	9/21/2012 7:30	pH	9.4
HO-12-020346001	150-MH33A	Man_Hole_33A	9/22/2012 6:00	pH	8.64
HO-12-020433001	150-MH33A	Man_Hole_33A	9/23/2012 7:24	pH	8.01
HO-12-020534001	150-MH33A	Man_Hole_33A	9/24/2012 7:04	pH	7.78
HO-12-020631001	150-MH33A	Man_Hole_33A	9/25/2012 7:16	pH	8.57
HO-12-020719001	150-MH33A	Man_Hole_33A	9/26/2012 6:00	pH	7.69
HO-12-020808001	150-MH33A	Man_Hole_33A	9/27/2012 7:38	pH	7.6
HO-12-020878001	150-MH33A	Man_Hole_33A	9/28/2012 8:08	pH	7.38
HO-12-020986001	150-MH33A	Man_Hole_33A	9/29/2012 9:29	pH	7.27
HO-12-021052001	150-MH33A	Man_Hole_33A	9/30/2012 8:50	pH	7.24
HO-12-021125001	150-MH33A	Man_Hole_33A	10/1/2012 7:40	pH	7.66

HO-12-021208001	150-MH33A	Man_Hole_33A	10/2/2012 7:20	pH	7.39
HO-12-021267001	150-MH33A	Man_Hole_33A	10/3/2012 8:05	pH	7.44
HO-12-021341001	150-MH33A	Man_Hole_33A	10/4/2012 9:20	pH	7.47
HO-12-021371001	150-MH33A	Man_Hole_33A	10/5/2012 7:39	pH	7.51
HO-12-021439001	150-MH33A	Man_Hole_33A	10/6/2012 6:42	pH	7.72
HO-12-021478001	150-MH33A	Man_Hole_33A	10/7/2012 6:28	pH	7.8
HO-12-021533001	150-MH33A	Man_Hole_33A	10/8/2012 7:56	pH	8.69
HO-12-021601001	150-MH33A	Man_Hole_33A	10/9/2012 7:32	pH	7.29
HO-12-021660001	150-MH33A	Man_Hole_33A	10/10/2012 10:50	pH	8.52
HO-12-021720001	150-MH33A	Man_Hole_33A	10/11/2012 6:50	pH	7.48
HO-12-021783001	150-MH33A	Man_Hole_33A	10/12/2012 9:40	pH	7.77
HO-12-021866001	150-MH33A	Man_Hole_33A	10/13/2012 8:15	pH	9.26
HO-12-021943001	150-MH33A	Man_Hole_33A	10/14/2012 9:20	pH	8.95
HO-12-022001001	150-MH33A	Man_Hole_33A	10/15/2012 8:16	pH	9.8
HO-12-022080001	150-MH33A	Man_Hole_33A	10/16/2012 7:02	pH	7.7
HO-12-022152001	150-MH33A	Man_Hole_33A	10/17/2012 8:30	pH	9.3
HO-12-022224001	150-MH33A	Man_Hole_33A	10/18/2012 7:55	pH	9.87
HO-12-022302001	150-MH33A	Man_Hole_33A	10/19/2012 10:00	pH	9.07
HO-12-022376001	150-MH33A	Man_Hole_33A	10/20/2012 5:30	pH	9.04
HO-12-022449001	150-MH33A	Man_Hole_33A	10/21/2012 8:30	pH	7.49
HO-12-022497001	150-MH33A	Man_Hole_33A	10/22/2012 5:29	pH	7.52
HO-12-022585001	150-MH33A	Man_Hole_33A	10/23/2012 4:58	pH	7.42
HO-12-022644001	150-MH33A	Man_Hole_33A	10/24/2012 5:09	pH	7.57
HO-12-022728001	150-MH33A	Man_Hole_33A	10/25/2012 8:25	pH	7.39
HO-12-022793001	150-MH33A	Man_Hole_33A	10/26/2012 8:40	pH	7.31
HO-12-022879001	150-MH33A	Man_Hole_33A	10/27/2012 8:00	pH	8.61
HO-12-022967001	150-MH33A	Man_Hole_33A	10/28/2012 10:15	pH	10
HO-12-023029001	150-MH33A	Man_Hole_33A	10/29/2012 6:09	pH	7.81
HO-12-023119001	150-MH33A	Man_Hole_33A	10/30/2012 6:02	pH	8.19
HO-12-023171001	150-MH33A	Man_Hole_33A	10/31/2012 5:26	pH	7.59
HO-12-023239001	150-MH33A	Man_Hole_33A	11/1/2012 7:00	pH	7.65
HO-12-023289001	150-MH33A	Man_Hole_33A	11/2/2012 8:09	pH	7.6
HO-12-023353001	150-MH33A	Man_Hole_33A	11/3/2012 8:46	pH	9.76
HO-12-023401001	150-MH33A	Man_Hole_33A	11/4/2012 9:42	pH	7.1
HO-12-023452001	150-MH33A	Man_Hole_33A	11/5/2012 8:18	pH	7.35
HO-12-023527001	150-MH33A	Man_Hole_33A	11/6/2012 5:40	pH	7.72
HO-12-023585001	150-MH33A	Man_Hole_33A	11/7/2012 8:07	pH	9.9
HO-12-023644001	150-MH33A	Man_Hole_33A	11/8/2012 5:20	pH	8.26
HO-12-023731001	150-MH33A	Man_Hole_33A	11/9/2012 8:49	pH	9.93
HO-12-023816001	150-MH33A	Man_Hole_33A	11/10/2012 7:23	pH	9.89
HO-12-023893001	150-MH33A	Man_Hole_33A	11/11/2012 10:30	pH	8.77
HO-12-023953001	150-MH33A	Man_Hole_33A	11/12/2012 5:30	pH	9.48
HO-12-024057001	150-MH33A	Man_Hole_33A	11/13/2012 6:55	pH	10.08
HO-12-024151001	150-MH33A	Man_Hole_33A	11/14/2012 8:15	pH	7.7
HO-12-024226001	150-MH33A	Man_Hole_33A	11/15/2012 6:40	pH	7.72
HO-12-024281001	150-MH33A	Man_Hole_33A	11/16/2012 7:10	pH	7.36
HO-12-024363001	150-MH33A	Man_Hole_33A	11/17/2012 7:20	pH	7.52

HO-12-024430001	150-MH33A	Man_Hole_33A	11/18/2012 6:30	pH	7.83
HO-12-024498001	150-MH33A	Man_Hole_33A	11/19/2012 6:30	pH	7.98
HO-12-024597001	150-MH33A	Man_Hole_33A	11/20/2012 6:39	pH	7.79

T-1816 North Sump Blending Area

Sample ID	Code	Description	Collection Date	Test	Result
HO-12-000670001	150-1816	T-1816	1/9/2012 18:40	pH/920/940	8.32
HO-12-000782001	150-1816	T-1816	1/11/2012 1:00	pH/920/940	8.21
HO-12-002025001	150-1816	T-1816	1/27/2012 1:15	pH/920/940	8.01
HO-12-002340001	150-1816	T-1816	1/31/2012 14:45	pH/920/940	7.9
HO-12-002658001	150-1816	T-1816	2/4/2012 10:30	pH/920/940	8.6
HO-12-003059001	150-1816	T-1816	2/9/2012 8:31	pH/920/940	8.9
HO-12-003291001	150-1816	T-1816	2/13/2012 0:32	pH/920/940	7.9
HO-12-003767001	150-1816	T-1816	2/18/2012 10:15	pH/920/940	8.35
HO-12-005338001	150-1816	T-1816	3/10/2012 7:30	pH/920/940	8.39
HO-12-006164001	150-1816	T-1816	3/21/2012 8:15	pH/920/940	8
HO-12-006784001	150-1816	T-1816	3/29/2012 19:51	pH/920/940	7.47
HO-12-008195001	150-1816	T-1816	4/20/2012 23:15	pH/920/940	7.98
HO-12-009674001	150-1816	T-1816	5/12/2012 8:30	pH/920/940	8.25
HO-12-013977001	150-1816	T-1816	7/5/2012 21:30	pH/920/940	7.91
HO-12-014243001	150-1816	T-1816	7/8/2012 22:30	pH/920/940	8.1
HO-12-014286001	150-1816	T-1816	7/9/2012 7:30	pH/920/940	7.97
HO-12-014547001	150-1816	T-1816	7/13/2012 23:00	pH/920/940	8.16
HO-12-015298001	150-1816	T-1816	7/19/2012 21:59	pH/920/940	8.37
HO-12-018065001	150-1816	T-1816	8/24/2012 9:50	pH/920/940	7.78
HO-12-019639001	150-1816	T-1816	9/13/2012 9:10	pH/920/940	8.1
HO-12-021013001	150-1816	T-1816	9/29/2012 23:12	pH/920/940	7.25
HO-12-022203001	150-1816	T-1816	10/18/2012 0:30	pH/920/940	7.65
HO-12-023557001	150-1816	T-1816	11/6/2012 20:30	pH/920/940	8.79

*Batches Suitable for Discharg

Sphere FireWall pH Test

Sphere FireWall Lead Test

Sample ID	Sample Code	Description	Collection Date	Test	Result
HO-12-000671001	11-1865	T1865_Firewall	1/9/2012 18:40	pH/920/940	7.25
HO-12-000829001	11-1865	T1865_Firewall	1/11/2012 8:00	pH/920/940	7.54
HO-12-002024001	11-1865	T1865_Firewall	1/27/2012 0:50	pH/920/940	8.12
HO-12-006161001	11-1865	T1865_Firewall	3/21/2012 8:00	pH/920/940	7.25
HO-12-006782001	11-1865	T1865_Firewall	3/29/2012 19:48	pH/920/940	7.04
HO-12-008194001	11-1865	T1865_Firewall	4/20/2012 23:15	pH/920/940	7.09
HO-12-014023001	11-1865	T1865_Firewall	7/5/2012 12:30	pH/920/940	8.16
HO-12-014287001	11-1865	T1865_Firewall	7/9/2012 7:30	pH/920/940	7.51
HO-12-014379001	11-1865	T1865_Firewall	7/10/2012 8:30	pH/920/940	7.92
HO-12-017771001	11-1865	T1865_Firewall	8/19/2012 20:00	pH/920/940	7.3
HO-12-018083001	11-1865	T1865_Firewall	8/24/2012 13:00	pH/920/940	7.3
HO-12-019949001	11-1865	T1865_Firewall	9/17/2012 23:15	pH/920/940	7.72

* Batches tested and suitable for discharge

Ethyl CORPORATION

330 South Fourth Street
Richmond, VA 23219
Post Office Box 2218
Richmond, VA 23218-2218
Tel: 804-788-5600

March 22, 2013

RECEIVED
2013 MAR 26 PM 4: 17
HAZARDOUS WASTE
ENFORCEMENT BRANCH

Guy Tidmore, Chief
Compliance Enforcement Section (6EN-HE)
Hazardous Waste Enforcement Branch
Compliance Assurance and Enforcement Division
U.S. EPA, Region 6
1445 Ross Avenue, Suite 1200
Dallas, TX 75202-2733

Re: Consent Agreement and Final Order – Ethyl Corporation
Docket No. RCRA-06-2011-0957

Dear Mr. Tidmore:

This letter and attachments constitute the report of results of sampling as per the requirements of Paragraph 52.B of the Consent Agreement and Final Order (CAFO) issued under the above referenced Docket No. RCRA-06-2011-0957.

Ethyl Corporation (Ethyl) has completed the sampling and analysis in accordance with a sampling plan that meets the procedures set forth in "Test Methods for Evaluating Solid Waste, Physical/Chemical Methods," EPA Publication SW-846, and the corresponding method detection limits. All wastewater discharged by Ethyl to the Process Canal was sampled and tested for VOCs, SVOCs, total metals, and pH. Samples were taken after each point where any dilution or treatment of the Ethyl wastewaters occurs to ensure that any characteristic hazardous waste loses its hazardous waste characteristics prior to discharge into the Process Canal.

Sampling results for the sample points containing Ethyl wastewater are tabulated for convenience in Attachment 1. Laboratory reports complete with method descriptions, QA/QC data and all sample results (including Albemarle, MEMC and Ethyl) are included in Attachment 2. An engineering diagram showing the sample locations is included as Attachment 3. The sample results demonstrate that the Ethyl wastewaters are not characteristic hazardous waste when they enter the Process Canal.

In accordance with Paragraph 52.D of the CAFO:

> "I certify that the information contained in or accompanying this submission is true, accurate and complete. I am aware that there are significant penalties for submitting false information, including the possibility of fine and imprisonment for knowing violations."

Sincerely,

Ethyl Corporation

John W. Street

John W. Street

Director HSSE

cc: Manager
Waste Enforcement Section
Texas Commission on Environmental Quality
P.O. Box 13087, MC-128
Austin, TX 78711-3087

Evan Pearson
Senior Environmental Counsel
U.S. EPA, Region 6
1445 Ross Avenue, Suite 1200
Dallas, TX 75202-2733

H. S. Livesay, Ethyl Houston
K. L. Kirkeby, NewMarket
Al Axe, Winstead

ATTACHMENT 1

Results of Sampling

Background

Samples were collected in December 2012 as described in Ethyl's sampling plan submitted to EPA on November 20, 2012. Ethyl coordinated with Site partners, Albemarle and MEMC, to obtain and analyze wastewater samples entering the Process Canal in accordance with methods described in EPA Publication SW-846, as required by the CAFO. An independent qualified contractor, TestAmerica Laboratories, was commissioned to conduct the coordinated sampling event and testing for VOCs, SVOCs and metals. Albemarle conducted the pH testing. Full-text reports, including analytical results as well as all QA/QC from TestAmerica and Albemarle are included in Attachment 2. Please note that these reports contain the test results for Albemarle, MEMC and Ethyl samples.

Sample Points

Ethyl's sampling plan identified the following three wastewater inputs to the Process Canal:

1) The combined process wastewater flow from the Fuel and Lubricant Additives portion of the Plant flowing through the large sump designated as MH-33A by Ethyl, thence discharged via a sewer pipe to the sampling point designated as Manhole 11, upstream of the discharge point into the Process Canal.
2) The stormwater collected in the Fuels Blending area of the Ethyl Fuel Additives Terminal, which is discharged via the T-1816 North Sump to the Process Canal.
3) Stripper wastewater including stormwater from portions of the Fuel Additives Terminal, including the Water Treater area, various load spots and several storage tank dikes. In the TestAmerica Report, this sample is designated "Storm Water Basin." This stream also includes some Albemarle wastewater and stormwater.

As per the sampling plan, samples were analyzed for VOCs, SVOCs, total metals and pH.

Ethyl Sample Results

Full laboratory reports are included in Attachment 2. The table below summarizes all analytes detected for samples collected at the Ethyl sample points. This summary table and Attachment 2 sample results show that the vast majority of VOCs, SVOCs, and metals were not detected and that the pH was within the acceptable range. No samples were above the regulatory threshold which would define the wastewater as being a characteristic hazardous waste.

TABLE OF RESULTS - ETHYL CORPORATION SAMPLING EVENT - DOCKET NO. RCRA 06-2011-0965

Sample ID	Sample Name	Specific Method	CAS Number	Analyte	Result	Units	Method Detection Limit	Regulatory Level (mg/L)
600-65562-3	MANHOLE 11	7470A	7439-97-6	Mercury	ND	mg/L	0.0002	0.2
600-65562-3	MANHOLE 11	6010C	7440-38-2	Arsenic	ND	mg/L	0.005	5
600-65562-3	MANHOLE 11	6010C	7440-39-3	Barium	**0.03**	mg/L	0.01	100
600-65562-3	MANHOLE 11	6010C	7440-43-9	Cadmium	ND	mg/L	0.005	1
600-65562-3	MANHOLE 11	6010C	7440-47-3	Chromium	ND	mg/L	0.005	5
600-65562-3	MANHOLE 11	6010C	7439-92-1	Lead	ND	mg/L	0.005	5
600-65562-3	MANHOLE 11	6010C	7782-49-2	Selenium	ND	mg/L	0.01	1
600-65562-3	MANHOLE 11	6010C	7440-22-4	Silver	ND	mg/L	0.005	5
600-65562-3	MANHOLE 11	8270D	95-95-4	2,4,5-Trichlorophenol	ND	mg/L	0.04	400
600-65562-3	MANHOLE 11	8270D	88-06-2	2,4,6-Trichlorophenol	ND	mg/L	0.04	2
600-65562-3	MANHOLE 11	8270D	121-14-2	2,4-Dinitrotoluene	ND	mg/L	0.04	0.13
600-65562-3	MANHOLE 11	8270D	95-48-7	2-Methylphenol	ND	mg/L	0.04	200
600-65562-3	MANHOLE 11	8270D	15831-10-4	3 & 4 Methylphenol	ND	mg/L	0.08	200
600-65562-3	MANHOLE 11	8270D	118-74-1	Hexachlorobenzene	ND	mg/L	0.04	0.13
600-65562-3	MANHOLE 11	8270D	87-68-3	Hexachlorobutadiene	ND	mg/L	0.04	0.5
600-65562-3	MANHOLE 11	8270D	67-72-1	Hexachloroethane	ND	mg/L	0.04	3
600-65562-3	MANHOLE 11	8270D	98-95-3	Nitrobenzene	ND	mg/L	0.04	2
600-65562-3	MANHOLE 11	8270D	87-86-5	Pentachlorophenol	ND	mg/L	0.08	100
600-65562-3	MANHOLE 11	8270D	110-86-1	Pyridine	ND	mg/L	0.04	5
600-65562-3	MANHOLE 11	8260B	75-35-4	1,1-Dichloroethene	ND	mg/L	0.1	0.7
600-65562-3	MANHOLE 11	8260B	107-06-2	1,2-Dichloroethane	ND	mg/L	0.1	0.5
600-65562-3	MANHOLE 11	8260B	106-46-7	1,4-Dichlorobenzene	ND	mg/L	0.1	7.5
600-65562-3	MANHOLE 11	8260B	78-93-3	2-Butanone (MEK)	ND	mg/L	0.2	200
600-65562-3	MANHOLE 11	8260B	71-43-2	Benzene	ND	mg/L	0.1	0.5
600-65562-3	MANHOLE 11	8260B	56-23-5	Carbon tetrachloride	ND	mg/L	0.1	0.5
600-65562-3	MANHOLE 11	8260B	108-90-7	Chlorobenzene	ND	mg/L	0.1	100
600-65562-3	MANHOLE 11	8260B	67-66-3	Chloroform	ND	mg/L	0.1	6
600-65562-3	MANHOLE 11	8260B	127-18-4	Tetrachloroethene	ND	mg/L	0.1	0.7
600-65562-3	MANHOLE 11	8260B	79-01-6	Trichloroethene	ND	mg/L	0.1	0.5
600-65562-3	MANHOLE 11	8260B	75-01-4	Vinyl chloride	ND	mg/L	0.1	0.2
1235311	MANHOLE 11	9040C	N/A	pH	**7.00**	SU	N/A	12.5
600-65562-5	Storm Water Basin	7470A	7439-97-6	Mercury	ND	mg/L	0.0002	0.2
600-65562-5	Storm Water Basin	6010C	7440-38-2	Arsenic	ND	mg/L	0.005	5
600-65562-5	Storm Water Basin	6010C	7440-39-3	Barium	**0.047**	mg/L	0.01	100
600-65562-5	Storm Water Basin	6010C	7440-43-9	Cadmium	ND	mg/L	0.005	1
600-65562-5	Storm Water	6010C	7440-47-3	Chromium	ND	mg/L	0.005	5

	Basin							
600-65562-5	Storm Water Basin	6010C	7439-92-1	Lead	**0.008**	mg/L	0.005	5
600-65562-5	Storm Water Basin	6010C	7782-49-2	Selenium	ND	mg/L	0.01	1
600-65562-5	Storm Water Basin	6010C	7440-22-4	Silver	ND	mg/L	0.005	5
600-65562-5	Storm Water Basin	8270D	95-95-4	2,4,5-Trichlorophenol	ND	mg/L	0.04	400
600-65562-5	Storm Water Basin	8270D	88-06-2	2,4,6-Trichlorophenol	ND	mg/L	0.04	2
600-65562-5	Storm Water Basin	8270D	121-14-2	2,4-Dinitrotoluene	ND	mg/L	0.04	0.13
600-65562-5	Storm Water Basin	8270D	95-48-7	2-Methylphenol	ND	mg/L	0.04	200
600-65562-5	Storm Water Basin	8270D	15831-10-4	3 & 4 Methylphenol	ND	mg/L	0.08	200
600-65562-5	Storm Water Basin	8270D	118-74-1	Hexachlorobenzene	ND	mg/L	0.04	0.13
600-65562-5	Storm Water Basin	8270D	87-68-3	Hexachlorobutadiene	ND	mg/L	0.04	0.5
600-65562-5	Storm Water Basin	8270D	67-72-1	Hexachloroethane	ND	mg/L	0.04	3
600-65562-5	Storm Water Basin	8270D	98-95-3	Nitrobenzene	ND	mg/L	0.04	2
600-65562-5	Storm Water Basin	8270D	87-86-5	Pentachlorophenol	ND	mg/L	0.08	100
600-65562-5	Storm Water Basin	8270D	110-86-1	Pyridine	ND	mg/L	0.04	5
600-65562-5	Storm Water Basin	8260B	75-35-4	1,1-Dichloroethene	ND	mg/L	0.1	0.7
600-65562-5	Storm Water Basin	8260B	107-06-2	1,2-Dichloroethane	**0.37**	mg/L	0.1	0.5
600-65562-5	Storm Water Basin	8260B	106-46-7	1,4-Dichlorobenzene	ND	mg/L	0.1	7.5
600-65562-5	Storm Water Basin	8260B	78-93-3	2-Butanone (MEK)	ND	mg/L	0.2	200
600-65562-5	Storm Water Basin	8260B	71-43-2	Benzene	ND	mg/L	0.1	0.5
600-65562-5	Storm Water Basin	8260B	56-23-5	Carbon tetrachloride	ND	mg/L	0.1	0.5
600-65562-5	Storm Water Basin	8260B	108-90-7	Chlorobenzene	ND	mg/L	0.1	100
600-65562-5	Storm Water Basin	8260B	67-66-3	Chloroform	ND	mg/L	0.1	6
600-65562-5	Storm Water Basin	8260B	127-18-4	Tetrachloroethene	ND	mg/L	0.1	0.7
600-65562-5	Storm Water Basin	8260B	79-01-6	Trichloroethene	ND	mg/L	0.1	0.5
600-65562-5	Storm Water Basin	8260B	75-01-4	Vinyl chloride	ND	mg/L	0.1	0.2

1236241	Storm Water Basin	9040C	N/A	pH	**7.70**	SU	N/A	12.5
600-65562-7	T1816	7470A	7439-97-6	Mercury	ND	mg/L	0.0002	0.2
600-65562-7	T1816	6010C	7440-38-2	Arsenic	ND	mg/L	0.005	5
600-65562-7	T1816	6010C	7440-39-3	Barium	**0.074**	mg/L	0.01	100
600-65562-7	T1816	6010C	7440-43-9	Cadmium	ND	mg/L	0.005	1
600-65562-7	T1816	6010C	7440-47-3	Chromium	ND	mg/L	0.005	5
600-65562-7	T1816	6010C	7439-92-1	Lead	**0.33**	mg/L	0.005	5
600-65562-7	T1816	6010C	7782-49-2	Selenium	ND	mg/L	0.01	1
600-65562-7	T1816	6010C	7440-22-4	Silver	ND	mg/L	0.005	5
600-65562-7	T1816	8270D	95-95-4	2,4,5-Trichlorophenol	ND	mg/L	0.04	400
600-65562-7	T1816	8270D	88-06-2	2,4,6-Trichlorophenol	ND	mg/L	0.04	2
600-65562-7	T1816	8270D	121-14-2	2,4-Dinitrotoluene	ND	mg/L	0.04	0.13
600-65562-7	T1816	8270D	95-48-7	2-Methylphenol	ND	mg/L	0.04	200
600-65562-7	T1816	8270D	15831-10-4	3 & 4 Methylphenol	ND	mg/L	0.08	200
600-65562-7	T1816	8270D	118-74-1	Hexachlorobenzene	ND	mg/L	0.04	0.13
600-65562-7	T1816	8270D	87-68-3	Hexachlorobutadiene	ND	mg/L	0.04	0.5
600-65562-7	T1816	8270D	67-72-1	Hexachloroethane	ND	mg/L	0.04	3
600-65562-7	T1816	8270D	98-95-3	Nitrobenzene	ND	mg/L	0.04	2
600-65562-7	T1816	8270D	87-86-5	Pentachlorophenol	ND	mg/L	0.08	100
600-65562-7	T1816	8270D	110-86-1	Pyridine	ND	mg/L	0.04	5
600-65562-7	T1816	8260B	75-35-4	1,1-Dichloroethene	ND	mg/L	0.1	0.7
600-65562-7	T1816	8260B	107-06-2	1,2-Dichloroethane	ND	mg/L	0.1	0.5
600-65562-7	T1816	8260B	106-46-7	1,4-Dichlorobenzene	ND	mg/L	0.1	7.5
600-65562-7	T1816	8260B	78-93-3	2-Butanone (MEK)	ND	mg/L	0.2	200
600-65562-7	T1816	8260B	71-43-2	Benzene	ND	mg/L	0.1	0.5
600-65562-7	T1816	8260B	56-23-5	Carbon tetrachloride	ND	mg/L	0.1	0.5
600-65562-7	T1816	8260B	108-90-7	Chlorobenzene	ND	mg/L	0.1	100
600-65562-7	T1816	8260B	67-66-3	Chloroform	ND	mg/L	0.1	6
600-65562-7	T1816	8260B	127-18-4	Tetrachloroethene	ND	mg/L	0.1	0.7
600-65562-7	T1816	8260B	79-01-6	Trichloroethene	ND	mg/L	0.1	0.5
600-65562-7	T1816	8260B	75-01-4	Vinyl chloride	ND	mg/L	0.1	0.2
1236230	T1816	9040C	N/A	pH	**7.44**	SU	N/A	12.5

Attachment 2

Analytical Reports

Attachment 3

Sample Locations

Attachment 2

Analytical Reports

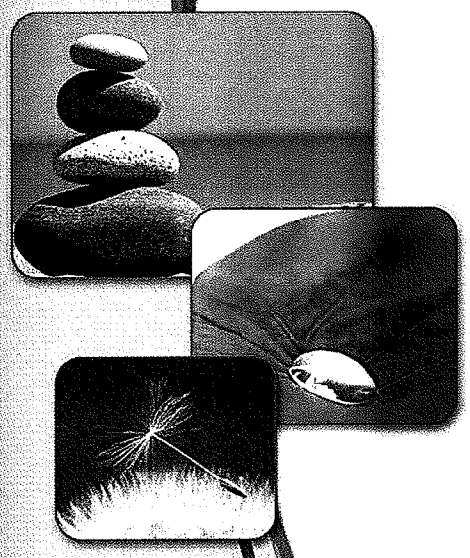

TestAmerica

THE LEADER IN ENVIRONMENTAL TESTING

ANALYTICAL REPORT

TestAmerica Laboratories, Inc.
TestAmerica Houston
6310 Rothway Street
Houston, TX 77040
Tel: (713)690-4444

TestAmerica Job ID: 600-65562-1
Client Project/Site: PAS NON- ROUTINE - Special Project

For:
Albemarle Corporation
PO BOX 2500
Pasadena, Texas 77501

Attn: Mr. Doug Thompson

Authorized for release by:
12/24/2012 2:00:29 PM
Cathy Upton
Data Delivery Analyst
cathy.upton@testamericainc.com

Designee for

Dean Joiner
Project Manager I
dean.joiner@testamericainc.com

LINKS

Review your project results through TotalAccess

Have a Question? Ask The Expert

Visit us at: www.testamericainc.com

The test results in this report meet all 2003 NELAC and 2009 TNI requirements for accredited parameters, exceptions are noted in this report. This report may not be reproduced except in full, and with written approval from the laboratory. For questions please contact the Project Manager at the e-mail address or telephone number listed on this page.

This report has been electronically signed and authorized by the signatory. Electronic signature is intended to be the legally binding equivalent of a traditionally handwritten signature.

Results relate only to the items tested and the sample(s) as received by the laboratory.

Table of Contents

Cover Page 1
Table of Contents 2
Definitions/Glossary 3
Case Narrative 4
Client Sample Results 5
Surrogate Summary 14
QC Sample Results 16
QC Association Summary 22
Lab Chronicle 25
Certification Summary 28
Method Summary 29
Sample Summary 30
Chain of Custody 31
Receipt Checklists 32

Qualifiers

GC/MS Semi VOA

Qualifier	Qualifier Description
F	MS or MSD exceeds the control limits
X	Surrogate is outside control limits

Metals

Qualifier	Qualifier Description
F	MS or MSD exceeds the control limits

Glossary

Abbreviation	These commonly used abbreviations may or may not be present in this report.
☼	Listed under the "D" column to designate that the result is reported on a dry weight basis
%R	Percent Recovery
CNF	Contains no Free Liquid
DER	Duplicate error ratio (normalized absolute difference)
DL, RA, RE, IN	Indicates a Dilution, Reanalysis, Re-extraction, or additional Initial metals/anion analysis of the sample
DLC	Decision level concentration
EDL	Estimated Detection Limit
EPA	United States Environmental Protection Agency
MDA	Minimum detectable activity
MDC	Minimum detectable concentration
MDL	Method Detection Limit
ML	Minimum Level (Dioxin)
ND	Not detected at the reporting limit (or MDL or EDL if shown)
PQL	Practical Quantitation Limit
QC	Quality Control
RER	Relative error ratio
RL	Reporting Limit or Requested Limit (Radiochemistry)
RPD	Relative Percent Difference, a measure of the relative difference between two points
TEF	Toxicity Equivalent Factor (Dioxin)
TEQ	Toxicity Equivalent Quotient (Dioxin)

Job ID: 600-65562-1

Laboratory: TestAmerica Houston

Narrative

Job Narrative
600-65562-1

Comments
No additional comments.

Receipt
The samples were received on 12/12/2012 12:45 PM; the samples arrived in good condition, properly preserved and, where required, on ice. The temperatures of the 4 coolers at receipt time were 1.6° C, 1.6° C, 3.6° C and 3.9° C.

GC/MS VOA
Method(s) 8260B: The laboratory's default procedure for TCLP samples for 8260B incorporates a dilution factor of twenty prior to analysis. Further dilutions may be required due to the level of target analytes in the samples.

No other analytical or quality issues were noted.

GC/MS Semi VOA
Method(s) 8270D: Surrogate recovery for the following sample(s) was outside the upper control limit: T816 (600-65562-7). This sample did not contain any target analytes; therefore, re-extraction and/or re-analysis was not performed.

Method(s) 8270D: The initial calibration verification (ICV) analyzed in batch 169300 was outside method criteria for the following analyte(s): Hexachloroethane. As indicated in the reference method, sample analysis may proceed; however, any detection for the affected analyte(s) is considered estimated.

Method(s) 8270D: The matrix spike / matrix spike duplicate (MS/MSD) recoveries for batch 169030 were outside control limits. The associated laboratory control sample (LCS) recovery met acceptance criteria.

No other analytical or quality issues were noted.

Metals
Method(s) 6010C: Due to sample matrix effect on the internal standard (ISTD), a dilution was required for the following sample(s): S SOLIDS DECANT (600-65562-1).

Method(s) 6010C: The matrix spike / matrix spike duplicate (MS/MSD) recoveries for batch 168906 were outside control limits. The associated laboratory control sample (LCS) recovery met acceptance criteria.

No other analytical or quality issues were noted.

Organic Prep
No analytical or quality issues were noted.

Client Sample Results

Client: Albemarle Corporation
Project/Site: PAS NON- ROUTINE - Special Project

TestAmerica Job ID: 600-65562-1

Client Sample ID: S SOLIDS DECANT

Lab Sample ID: 600-65562-1

Date Collected: 12/06/12 14:45
Date Received: 12/12/12 12:45

Matrix: Water

Method: 8260B - Volatile Organic Compounds (GC/MS) - TCLP

Analyte	Result	Qualifier	RL	MDL	Unit	D	Prepared	Analyzed	Dil Fac
Benzene	ND		0.10		mg/L			12/14/12 18:10	20
2-Butanone (MEK)	ND		0.20		mg/L			12/14/12 18:10	20
Carbon tetrachloride	ND		0.10		mg/L			12/14/12 18:10	20
Chlorobenzene	ND		0.10		mg/L			12/14/12 18:10	20
Chloroform	ND		0.10		mg/L			12/14/12 18:10	20
1,4-Dichlorobenzene	ND		0.10		mg/L			12/14/12 18:10	20
1,2-Dichloroethane	ND		0.10		mg/L			12/14/12 18:10	20
1,1-Dichloroethene	ND		0.10		mg/L			12/14/12 18:10	20
Tetrachloroethene	ND		0.10		mg/L			12/14/12 18:10	20
Trichloroethene	ND		0.10		mg/L			12/14/12 18:10	20
Vinyl chloride	ND		0.10		mg/L			12/14/12 18:10	20

Surrogate	*%Recovery*	*Qualifier*	*Limits*	*Prepared*	*Analyzed*	*Dil Fac*
4-Bromofluorobenzene	*75*		*67 - 139*		*12/14/12 18:10*	*20*
Dibromofluoromethane	*68*		*62 - 130*		*12/14/12 18:10*	*20*
1,2-Dichloroethane-d4 (Surr)	*65*		*50 - 134*		*12/14/12 18:10*	*20*
Toluene-d8 (Surr)	*79*		*70 - 130*		*12/14/12 18:10*	*20*

Method: 8270D - Semivolatile Organic Compounds (GC/MS) - TCLP

Analyte	Result	Qualifier	RL	MDL	Unit	D	Prepared	Analyzed	Dil Fac
2-Methylphenol	**0.12**		0.040		mg/L		12/18/12 11:40	12/20/12 21:33	1
3 & 4 Methylphenol	ND		0.080		mg/L		12/18/12 11:40	12/20/12 21:33	1
2,4-Dinitrotoluene	ND		0.040		mg/L		12/18/12 11:40	12/20/12 21:33	1
Hexachloroethane	ND		0.040		mg/L		12/18/12 11:40	12/20/12 21:33	1
Hexachlorobutadiene	ND		0.040		mg/L		12/18/12 11:40	12/20/12 21:33	1
Hexachlorobenzene	ND		0.040		mg/L		12/18/12 11:40	12/20/12 21:33	1
Nitrobenzene	ND		0.040		mg/L		12/18/12 11:40	12/20/12 21:33	1
Pentachlorophenol	ND		0.080		mg/L		12/18/12 11:40	12/20/12 21:33	1
2,4,5-Trichlorophenol	ND		0.040		mg/L		12/18/12 11:40	12/20/12 21:33	1
2,4,6-Trichlorophenol	ND		0.040		mg/L		12/18/12 11:40	12/20/12 21:33	1
Pyridine	ND		0.040		mg/L		12/18/12 11:40	12/20/12 21:33	1

Surrogate	*%Recovery*	*Qualifier*	*Limits*	*Prepared*	*Analyzed*	*Dil Fac*
2,4,6-Tribromophenol (Surr)	*90*		*15 - 135*	*12/18/12 11:40*	*12/20/12 21:33*	*1*
2-Fluorobiphenyl	*85*		*34 - 113*	*12/18/12 11:40*	*12/20/12 21:33*	*1*
2-Fluorophenol (Surr)	*54*		*10 - 104*	*12/18/12 11:40*	*12/20/12 21:33*	*1*
Nitrobenzene-d5 (Surr)	*105*		*27 - 110*	*12/18/12 11:40*	*12/20/12 21:33*	*1*
Phenol-d5 (Surr)	*78*		*10 - 110*	*12/18/12 11:40*	*12/20/12 21:33*	*1*
Terphenyl-d14 (Surr)	*82*		*53 - 125*	*12/18/12 11:40*	*12/20/12 21:33*	*1*

Method: 6010C - Metals (ICP)

Analyte	Result	Qualifier	RL	MDL	Unit	D	Prepared	Analyzed	Dil Fac
Arsenic	ND		0.0050		mg/L		12/17/12 10:22	12/18/12 14:25	1
Barium	**0.016**		0.010		mg/L		12/17/12 10:22	12/18/12 14:25	1
Cadmium	ND		0.0050		mg/L		12/17/12 10:22	12/18/12 14:25	1
Chromium	**0.024**		0.0050		mg/L		12/17/12 10:22	12/19/12 14:54	1
Lead	ND		0.025		mg/L		12/17/12 10:22	12/19/12 14:57	5
Selenium	ND		0.010		mg/L		12/17/12 10:22	12/18/12 14:25	1
Silver	ND		0.0050		mg/L		12/17/12 10:22	12/18/12 14:25	1

Client Sample Results

Client: Albemarle Corporation
Project/Site: PAS NON- ROUTINE - Special Project

TestAmerica Job ID: 600-65562-1

Client Sample ID: S SOLIDS DECANT

Lab Sample ID: 600-65562-1
Matrix: Water

Date Collected: 12/06/12 14:45
Date Received: 12/12/12 12:45

Method: 7470A - Mercury (CVAA)

Analyte	Result	Qualifier	RL	MDL	Unit	D	Prepared	Analyzed	Dil Fac
Mercury	ND		0.00020		mg/L		12/19/12 07:35	12/19/12 13:51	1

Client Sample ID: SP102

Lab Sample ID: 600-65562-2
Matrix: Water

Date Collected: 12/06/12 14:15
Date Received: 12/12/12 12:45

Method: 8260B - Volatile Organic Compounds (GC/MS) - TCLP

Analyte	Result	Qualifier	RL	MDL	Unit	D	Prepared	Analyzed	Dil Fac
Benzene	ND		0.10		mg/L			12/14/12 19:47	20
2-Butanone (MEK)	ND		0.20		mg/L			12/14/12 19:47	20
Carbon tetrachloride	ND		0.10		mg/L			12/14/12 19:47	20
Chlorobenzene	ND		0.10		mg/L			12/14/12 19:47	20
Chloroform	ND		0.10		mg/L			12/14/12 19:47	20
1,4-Dichlorobenzene	ND		0.10		mg/L			12/14/12 19:47	20
1,2-Dichloroethane	ND		0.10		mg/L			12/14/12 19:47	20
1,1-Dichloroethene	ND		0.10		mg/L			12/14/12 19:47	20
Tetrachloroethene	ND		0.10		mg/L			12/14/12 19:47	20
Trichloroethene	ND		0.10		mg/L			12/14/12 19:47	20
Vinyl chloride	ND		0.10		mg/L			12/14/12 19:47	20

Surrogate	*%Recovery*	*Qualifier*	*Limits*	*Prepared*	*Analyzed*	*Dil Fac*
4-Bromofluorobenzene	*76*		*67 - 139*		*12/14/12 19:47*	*20*
Dibromofluoromethane	*71*		*62 - 130*		*12/14/12 19:47*	*20*
1,2-Dichloroethane-d4 (Surr)	*70*		*50 - 134*		*12/14/12 19:47*	*20*
Toluene-d8 (Surr)	*84*		*70 - 130*		*12/14/12 19:47*	*20*

Method: 8270D - Semivolatile Organic Compounds (GC/MS) - TCLP

Analyte	Result	Qualifier	RL	MDL	Unit	D	Prepared	Analyzed	Dil Fac
2-Methylphenol	ND		0.040		mg/L		12/18/12 11:40	12/20/12 22:06	1
3 & 4 Methylphenol	ND		0.080		mg/L		12/18/12 11:40	12/20/12 22:06	1
2,4-Dinitrotoluene	ND		0.040		mg/L		12/18/12 11:40	12/20/12 22:06	1
Hexachloroethane	ND		0.040		mg/L		12/18/12 11:40	12/20/12 22:06	1
Hexachlorobutadiene	ND		0.040		mg/L		12/18/12 11:40	12/20/12 22:06	1
Hexachlorobenzene	ND		0.040		mg/L		12/18/12 11:40	12/20/12 22:06	1
Nitrobenzene	ND		0.040		mg/L		12/18/12 11:40	12/20/12 22:06	1
Pentachlorophenol	ND		0.080		mg/L		12/18/12 11:40	12/20/12 22:06	1
2,4,5-Trichlorophenol	ND		0.040		mg/L		12/18/12 11:40	12/20/12 22:06	1
2,4,6-Trichlorophenol	ND		0.040		mg/L		12/18/12 11:40	12/20/12 22:06	1
Pyridine	ND		0.040		mg/L		12/18/12 11:40	12/20/12 22:06	1

Surrogate	*%Recovery*	*Qualifier*	*Limits*	*Prepared*	*Analyzed*	*Dil Fac*
2,4,6-Tribromophenol (Surr)	*90*		*15 - 135*	*12/18/12 11:40*	*12/20/12 22:06*	*1*
2-Fluorobiphenyl	*88*		*34 - 113*	*12/18/12 11:40*	*12/20/12 22:06*	*1*
2-Fluorophenol (Surr)	*53*		*10 - 104*	*12/18/12 11:40*	*12/20/12 22:06*	*1*
Nitrobenzene-d5 (Surr)	*84*		*27 - 110*	*12/18/12 11:40*	*12/20/12 22:06*	*1*
Phenol-d5 (Surr)	*72*		*10 - 110*	*12/18/12 11:40*	*12/20/12 22:06*	*1*
Terphenyl-d14 (Surr)	*87*		*53 - 125*	*12/18/12 11:40*	*12/20/12 22:06*	*1*

Method: 6010C - Metals (ICP)

Analyte	Result	Qualifier	RL	MDL	Unit	D	Prepared	Analyzed	Dil Fac
Arsenic	**0.010**		0.0050		mg/L		12/17/12 10:22	12/18/12 14:50	1

Client Sample ID: SP102

Lab Sample ID: 600-65562-2

Date Collected: 12/06/12 14:15
Matrix: Water
Date Received: 12/12/12 12:45

Method: 6010C - Metals (ICP) (Continued)

Analyte	Result	Qualifier	RL	MDL	Unit	D	Prepared	Analyzed	Dil Fac
Barium	**1.4**		0.010		mg/L		12/17/12 10:22	12/18/12 14:50	1
Cadmium	ND		0.0050		mg/L		12/17/12 10:22	12/18/12 14:50	1
Chromium	**0.15**		0.0050		mg/L		12/17/12 10:22	12/19/12 15:00	1
Lead	**0.76**		0.0050		mg/L		12/17/12 10:22	12/18/12 14:50	1
Selenium	ND		0.010		mg/L		12/17/12 10:22	12/18/12 14:50	1
Silver	ND		0.0050		mg/L		12/17/12 10:22	12/18/12 14:50	1

Method: 7470A - Mercury (CVAA)

Analyte	Result	Qualifier	RL	MDL	Unit	D	Prepared	Analyzed	Dil Fac
Mercury	**0.0042**		0.00020		mg/L		12/19/12 07:35	12/19/12 13:52	1

Client Sample ID: MANHOLE 11

Lab Sample ID: 600-65562-3

Date Collected: 12/06/12 11:45
Matrix: Water
Date Received: 12/12/12 12:45

Method: 8260B - Volatile Organic Compounds (GC/MS) - TCLP

Analyte	Result	Qualifier	RL	MDL	Unit	D	Prepared	Analyzed	Dil Fac
Benzene	ND		0.10		mg/L			12/14/12 20:11	20
2-Butanone (MEK)	ND		0.20		mg/L			12/14/12 20:11	20
Carbon tetrachloride	ND		0.10		mg/L			12/14/12 20:11	20
Chlorobenzene	ND		0.10		mg/L			12/14/12 20:11	20
Chloroform	ND		0.10		mg/L			12/14/12 20:11	20
1,4-Dichlorobenzene	ND		0.10		mg/L			12/14/12 20:11	20
1,2-Dichloroethane	ND		0.10		mg/L			12/14/12 20:11	20
1,1-Dichloroethene	ND		0.10		mg/L			12/14/12 20:11	20
Tetrachloroethene	ND		0.10		mg/L			12/14/12 20:11	20
Trichloroethene	ND		0.10		mg/L			12/14/12 20:11	20
Vinyl chloride	ND		0.10		mg/L			12/14/12 20:11	20

Surrogate	*%Recovery*	*Qualifier*	*Limits*	*Prepared*	*Analyzed*	*Dil Fac*
4-Bromofluorobenzene	*77*		*67 - 139*		*12/14/12 20:11*	*20*
Dibromofluoromethane	*71*		*62 - 130*		*12/14/12 20:11*	*20*
1,2-Dichloroethane-d4 (Surr)	*70*		*50 - 134*		*12/14/12 20:11*	*20*
Toluene-d8 (Surr)	*81*		*70 - 130*		*12/14/12 20:11*	*20*

Method: 8270D - Semivolatile Organic Compounds (GC/MS) - TCLP

Analyte	Result	Qualifier	RL	MDL	Unit	D	Prepared	Analyzed	Dil Fac
2-Methylphenol	ND		0.040		mg/L		12/18/12 11:40	12/20/12 22:39	1
3 & 4 Methylphenol	ND		0.080		mg/L		12/18/12 11:40	12/20/12 22:39	1
2,4-Dinitrotoluene	ND		0.040		mg/L		12/18/12 11:40	12/20/12 22:39	1
Hexachloroethane	ND		0.040		mg/L		12/18/12 11:40	12/20/12 22:39	1
Hexachlorobutadiene	ND		0.040		mg/L		12/18/12 11:40	12/20/12 22:39	1
Hexachlorobenzene	ND		0.040		mg/L		12/18/12 11:40	12/20/12 22:39	1
Nitrobenzene	ND		0.040		mg/L		12/18/12 11:40	12/20/12 22:39	1
Pentachlorophenol	ND		0.080		mg/L		12/18/12 11:40	12/20/12 22:39	1
2,4,5-Trichlorophenol	ND		0.040		mg/L		12/18/12 11:40	12/20/12 22:39	1
2,4,6-Trichlorophenol	ND		0.040		mg/L		12/18/12 11:40	12/20/12 22:39	1
Pyridine	ND		0.040		mg/L		12/18/12 11:40	12/20/12 22:39	1

Surrogate	*%Recovery*	*Qualifier*	*Limits*	*Prepared*	*Analyzed*	*Dil Fac*
2,4,6-Tribromophenol (Surr)	*98*		*15 - 135*	*12/18/12 11:40*	*12/20/12 22:39*	*1*

Client Sample ID: MANHOLE 11

Lab Sample ID: 600-65562-3

Date Collected: 12/06/12 11:45
Matrix: Water
Date Received: 12/12/12 12:45

Method: 8270D - Semivolatile Organic Compounds (GC/MS) - TCLP (Continued)

Surrogate	*%Recovery*	*Qualifier*	*Limits*	*Prepared*	*Analyzed*	*Dil Fac*
2-Fluorobiphenyl	*92*		*34 - 113*	*12/18/12 11:40*	*12/20/12 22:39*	*1*
2-Fluorophenol (Surr)	*57*		*10 - 104*	*12/18/12 11:40*	*12/20/12 22:39*	*1*
Nitrobenzene-d5 (Surr)	*86*		*27 - 110*	*12/18/12 11:40*	*12/20/12 22:39*	*1*
Phenol-d5 (Surr)	*81*		*10 - 110*	*12/18/12 11:40*	*12/20/12 22:39*	*1*
Terphenyl-d14 (Surr)	*86*		*53 - 125*	*12/18/12 11:40*	*12/20/12 22:39*	*1*

Method: 6010C - Metals (ICP)

Analyte	Result	Qualifier	RL	MDL	Unit	D	Prepared	Analyzed	Dil Fac
Arsenic	ND		0.0050		mg/L		12/17/12 10:22	12/18/12 14:53	1
Barium	**0.030**		0.010		mg/L		12/17/12 10:22	12/18/12 14:53	1
Cadmium	ND		0.0050		mg/L		12/17/12 10:22	12/18/12 14:53	1
Chromium	ND		0.0050		mg/L		12/17/12 10:22	12/19/12 15:03	1
Lead	ND		0.0050		mg/L		12/17/12 10:22	12/18/12 14:53	1
Selenium	ND		0.010		mg/L		12/17/12 10:22	12/18/12 14:53	1
Silver	ND		0.0050		mg/L		12/17/12 10:22	12/18/12 14:53	1

Method: 7470A - Mercury (CVAA)

Analyte	Result	Qualifier	RL	MDL	Unit	D	Prepared	Analyzed	Dil Fac
Mercury	ND		0.00020		mg/L		12/19/12 07:35	12/19/12 13:54	1

Client Sample ID: SP104

Lab Sample ID: 600-65562-4

Date Collected: 12/06/12 12:52
Matrix: Water
Date Received: 12/12/12 12:45

Method: 8260B - Volatile Organic Compounds (GC/MS) - TCLP

Analyte	Result	Qualifier	RL	MDL	Unit	D	Prepared	Analyzed	Dil Fac
Benzene	ND		0.10		mg/L			12/14/12 20:35	20
2-Butanone (MEK)	ND		0.20		mg/L			12/14/12 20:35	20
Carbon tetrachloride	ND		0.10		mg/L			12/14/12 20:35	20
Chlorobenzene	ND		0.10		mg/L			12/14/12 20:35	20
Chloroform	ND		0.10		mg/L			12/14/12 20:35	20
1,4-Dichlorobenzene	ND		0.10		mg/L			12/14/12 20:35	20
1,2-Dichloroethane	ND		0.10		mg/L			12/14/12 20:35	20
1,1-Dichloroethene	ND		0.10		mg/L			12/14/12 20:35	20
Tetrachloroethene	ND		0.10		mg/L			12/14/12 20:35	20
Trichloroethene	ND		0.10		mg/L			12/14/12 20:35	20
Vinyl chloride	ND		0.10		mg/L			12/14/12 20:35	20

Surrogate	*%Recovery*	*Qualifier*	*Limits*	*Prepared*	*Analyzed*	*Dil Fac*
4-Bromofluorobenzene	*78*		*67 - 139*		*12/14/12 20:35*	*20*
Dibromofluoromethane	*71*		*62 - 130*		*12/14/12 20:35*	*20*
1,2-Dichloroethane-d4 (Surr)	*69*		*50 - 134*		*12/14/12 20:35*	*20*
Toluene-d8 (Surr)	*84*		*70 - 130*		*12/14/12 20:35*	*20*

Method: 8270D - Semivolatile Organic Compounds (GC/MS) - TCLP

Analyte	Result	Qualifier	RL	MDL	Unit	D	Prepared	Analyzed	Dil Fac
2-Methylphenol	ND		0.040		mg/L		12/18/12 11:40	12/20/12 23:13	1
3 & 4 Methylphenol	ND		0.080		mg/L		12/18/12 11:40	12/20/12 23:13	1
2,4-Dinitrotoluene	ND		0.040		mg/L		12/18/12 11:40	12/20/12 23:13	1
Hexachloroethane	ND		0.040		mg/L		12/18/12 11:40	12/20/12 23:13	1

Client Sample ID: SP104

Lab Sample ID: 600-65562-4

Date Collected: 12/06/12 12:52
Matrix: Water
Date Received: 12/12/12 12:45

Method: 8270D - Semivolatile Organic Compounds (GC/MS) - TCLP (Continued)

Analyte	Result	Qualifier	RL	MDL	Unit	D	Prepared	Analyzed	Dil Fac
Hexachlorobutadiene	ND		0.040		mg/L		12/18/12 11:40	12/20/12 23:13	1
Hexachlorobenzene	ND		0.040		mg/L		12/18/12 11:40	12/20/12 23:13	1
Nitrobenzene	ND		0.040		mg/L		12/18/12 11:40	12/20/12 23:13	1
Pentachlorophenol	ND		0.080		mg/L		12/18/12 11:40	12/20/12 23:13	1
2,4,5-Trichlorophenol	ND		0.040		mg/L		12/18/12 11:40	12/20/12 23:13	1
2,4,6-Trichlorophenol	ND		0.040		mg/L		12/18/12 11:40	12/20/12 23:13	1
Pyridine	ND		0.040		mg/L		12/18/12 11:40	12/20/12 23:13	1

Surrogate	*%Recovery*	*Qualifier*	*Limits*	*Prepared*	*Analyzed*	*Dil Fac*
2,4,6-Tribromophenol (Surr)	*97*		*15 - 135*	*12/18/12 11:40*	*12/20/12 23:13*	*1*
2-Fluorobiphenyl	*93*		*34 - 113*	*12/18/12 11:40*	*12/20/12 23:13*	*1*
2-Fluorophenol (Surr)	*54*		*10 - 104*	*12/18/12 11:40*	*12/20/12 23:13*	*1*
Nitrobenzene-d5 (Surr)	*90*		*27 - 110*	*12/18/12 11:40*	*12/20/12 23:13*	*1*
Phenol-d5 (Surr)	*86*		*10 - 110*	*12/18/12 11:40*	*12/20/12 23:13*	*1*
Terphenyl-d14 (Surr)	*87*		*53 - 125*	*12/18/12 11:40*	*12/20/12 23:13*	*1*

Method: 6010C - Metals (ICP)

Analyte	Result	Qualifier	RL	MDL	Unit	D	Prepared	Analyzed	Dil Fac
Arsenic	ND		0.0050		mg/L		12/17/12 10:22	12/18/12 14:56	1
Barium	**0.11**		0.010		mg/L		12/17/12 10:22	12/18/12 14:56	1
Cadmium	ND		0.0050		mg/L		12/17/12 10:22	12/18/12 14:56	1
Chromium	ND		0.0050		mg/L		12/17/12 10:22	12/19/12 15:06	1
Lead	ND		0.0050		mg/L		12/17/12 10:22	12/18/12 14:56	1
Selenium	ND		0.010		mg/L		12/17/12 10:22	12/18/12 14:56	1
Silver	ND		0.0050		mg/L		12/17/12 10:22	12/18/12 14:56	1

Method: 7470A - Mercury (CVAA)

Analyte	Result	Qualifier	RL	MDL	Unit	D	Prepared	Analyzed	Dil Fac
Mercury	ND		0.00020		mg/L		12/19/12 07:35	12/19/12 13:56	1

Client Sample ID: SWB TO PC

Lab Sample ID: 600-65562-5

Date Collected: 12/07/12 09:45
Matrix: Water
Date Received: 12/12/12 12:45

Method: 8260B - Volatile Organic Compounds (GC/MS) - TCLP

Analyte	Result	Qualifier	RL	MDL	Unit	D	Prepared	Analyzed	Dil Fac
Benzene	ND		0.10		mg/L			12/14/12 21:00	20
2-Butanone (MEK)	ND		0.20		mg/L			12/14/12 21:00	20
Carbon tetrachloride	ND		0.10		mg/L			12/14/12 21:00	20
Chlorobenzene	ND		0.10		mg/L			12/14/12 21:00	20
Chloroform	ND		0.10		mg/L			12/14/12 21:00	20
1,4-Dichlorobenzene	ND		0.10		mg/L			12/14/12 21:00	20
1,2-Dichloroethane	**0.37**		0.10		mg/L			12/14/12 21:00	20
1,1-Dichloroethene	ND		0.10		mg/L			12/14/12 21:00	20
Tetrachloroethene	ND		0.10		mg/L			12/14/12 21:00	20
Trichloroethene	ND		0.10		mg/L			12/14/12 21:00	20
Vinyl chloride	ND		0.10		mg/L			12/14/12 21:00	20

Surrogate	*%Recovery*	*Qualifier*	*Limits*	*Prepared*	*Analyzed*	*Dil Fac*
4-Bromofluorobenzene	*77*		*67 - 139*		*12/14/12 21:00*	*20*
Dibromofluoromethane	*69*		*62 - 130*		*12/14/12 21:00*	*20*

Client Sample ID: SWB TO PC

Lab Sample ID: 600-65562-5
Matrix: Water

Date Collected: 12/07/12 09:45
Date Received: 12/12/12 12:45

Method: 8260B - Volatile Organic Compounds (GC/MS) - TCLP (Continued)

Surrogate	*%Recovery*	*Qualifier*	*Limits*	*Prepared*	*Analyzed*	*Dil Fac*
1,2-Dichloroethane-d4 (Surr)	*74*		*50 - 134*		*12/14/12 21:00*	*20*
Toluene-d8 (Surr)	*83*		*70 - 130*		*12/14/12 21:00*	*20*

Method: 8270D - Semivolatile Organic Compounds (GC/MS) - TCLP

Analyte	Result	Qualifier	RL	MDL	Unit	D	Prepared	Analyzed	Dil Fac
2-Methylphenol	ND		0.040		mg/L		12/18/12 11:40	12/20/12 23:46	1
3 & 4 Methylphenol	ND		0.080		mg/L		12/18/12 11:40	12/20/12 23:46	1
2,4-Dinitrotoluene	ND		0.040		mg/L		12/18/12 11:40	12/20/12 23:46	1
Hexachloroethane	ND		0.040		mg/L		12/18/12 11:40	12/20/12 23:46	1
Hexachlorobutadiene	ND		0.040		mg/L		12/18/12 11:40	12/20/12 23:46	1
Hexachlorobenzene	ND		0.040		mg/L		12/18/12 11:40	12/20/12 23:46	1
Nitrobenzene	ND		0.040		mg/L		12/18/12 11:40	12/20/12 23:46	1
Pentachlorophenol	ND		0.080		mg/L		12/18/12 11:40	12/20/12 23:46	1
2,4,5-Trichlorophenol	ND		0.040		mg/L		12/18/12 11:40	12/20/12 23:46	1
2,4,6-Trichlorophenol	ND		0.040		mg/L		12/18/12 11:40	12/20/12 23:46	1
Pyridine	ND		0.040		mg/L		12/18/12 11:40	12/20/12 23:46	1

Surrogate	*%Recovery*	*Qualifier*	*Limits*	*Prepared*	*Analyzed*	*Dil Fac*
2,4,6-Tribromophenol (Surr)	*100*		*15 - 135*	*12/18/12 11:40*	*12/20/12 23:46*	*1*
2-Fluorobiphenyl	*94*		*34 - 113*	*12/18/12 11:40*	*12/20/12 23:46*	*1*
2-Fluorophenol (Surr)	*57*		*10 - 104*	*12/18/12 11:40*	*12/20/12 23:46*	*1*
Nitrobenzene-d5 (Surr)	*92*		*27 - 110*	*12/18/12 11:40*	*12/20/12 23:46*	*1*
Phenol-d5 (Surr)	*86*		*10 - 110*	*12/18/12 11:40*	*12/20/12 23:46*	*1*
Terphenyl-d14 (Surr)	*90*		*53 - 125*	*12/18/12 11:40*	*12/20/12 23:46*	*1*

Method: 6010C - Metals (ICP)

Analyte	Result	Qualifier	RL	MDL	Unit	D	Prepared	Analyzed	Dil Fac
Arsenic	ND		0.0050		mg/L		12/17/12 10:22	12/18/12 14:59	1
Barium	**0.047**		0.010		mg/L		12/17/12 10:22	12/18/12 14:59	1
Cadmium	ND		0.0050		mg/L		12/17/12 10:22	12/18/12 14:59	1
Chromium	ND		0.0050		mg/L		12/17/12 10:22	12/19/12 15:09	1
Lead	**0.0075**		0.0050		mg/L		12/17/12 10:22	12/18/12 14:59	1
Selenium	ND		0.010		mg/L		12/17/12 10:22	12/18/12 14:59	1
Silver	ND		0.0050		mg/L		12/17/12 10:22	12/18/12 14:59	1

Method: 7470A - Mercury (CVAA)

Analyte	Result	Qualifier	RL	MDL	Unit	D	Prepared	Analyzed	Dil Fac
Mercury	ND		0.00020		mg/L		12/19/12 07:35	12/19/12 13:57	1

Client Sample ID: SANITARY SEWER

Lab Sample ID: 600-65562-6
Matrix: Water

Date Collected: 12/10/12 14:15
Date Received: 12/12/12 12:45

Method: 8260B - Volatile Organic Compounds (GC/MS) - TCLP

Analyte	Result	Qualifier	RL	MDL	Unit	D	Prepared	Analyzed	Dil Fac
Benzene	ND		0.10		mg/L			12/14/12 21:24	20
2-Butanone (MEK)	ND		0.20		mg/L			12/14/12 21:24	20
Carbon tetrachloride	ND		0.10		mg/L			12/14/12 21:24	20
Chlorobenzene	ND		0.10		mg/L			12/14/12 21:24	20
Chloroform	ND		0.10		mg/L			12/14/12 21:24	20

Client Sample ID: SANITARY SEWER

Lab Sample ID: 600-65562-6

Date Collected: 12/10/12 14:15
Matrix: Water
Date Received: 12/12/12 12:45

Method: 8260B - Volatile Organic Compounds (GC/MS) - TCLP (Continued)

Analyte	Result	Qualifier	RL	MDL	Unit	D	Prepared	Analyzed	Dil Fac
1,4-Dichlorobenzene	ND		0.10		mg/L			12/14/12 21:24	20
1,2-Dichloroethane	ND		0.10		mg/L			12/14/12 21:24	20
1,1-Dichloroethene	ND		0.10		mg/L			12/14/12 21:24	20
Tetrachloroethene	ND		0.10		mg/L			12/14/12 21:24	20
Trichloroethene	ND		0.10		mg/L			12/14/12 21:24	20
Vinyl chloride	ND		0.10		mg/L			12/14/12 21:24	20

Surrogate	*%Recovery*	*Qualifier*	*Limits*	*Prepared*	*Analyzed*	*Dil Fac*
4-Bromofluorobenzene	*70*		*67 - 139*		*12/14/12 21:24*	*20*
Dibromofluoromethane	*69*		*62 - 130*		*12/14/12 21:24*	*20*
1,2-Dichloroethane-d4 (Surr)	*68*		*50 - 134*		*12/14/12 21:24*	*20*
Toluene-d8 (Surr)	*82*		*70 - 130*		*12/14/12 21:24*	*20*

Method: 8270D - Semivolatile Organic Compounds (GC/MS) - TCLP

Analyte	Result	Qualifier	RL	MDL	Unit	D	Prepared	Analyzed	Dil Fac
2-Methylphenol	ND		0.040		mg/L		12/18/12 11:40	12/21/12 00:19	1
3 & 4 Methylphenol	ND		0.080		mg/L		12/18/12 11:40	12/21/12 00:19	1
2,4-Dinitrotoluene	ND		0.040		mg/L		12/18/12 11:40	12/21/12 00:19	1
Hexachloroethane	ND		0.040		mg/L		12/18/12 11:40	12/21/12 00:19	1
Hexachlorobutadiene	ND		0.040		mg/L		12/18/12 11:40	12/21/12 00:19	1
Hexachlorobenzene	ND		0.040		mg/L		12/18/12 11:40	12/21/12 00:19	1
Nitrobenzene	ND		0.040		mg/L		12/18/12 11:40	12/21/12 00:19	1
Pentachlorophenol	ND		0.080		mg/L		12/18/12 11:40	12/21/12 00:19	1
2,4,5-Trichlorophenol	ND		0.040		mg/L		12/18/12 11:40	12/21/12 00:19	1
2,4,6-Trichlorophenol	ND		0.040		mg/L		12/18/12 11:40	12/21/12 00:19	1
Pyridine	ND		0.040		mg/L		12/18/12 11:40	12/21/12 00:19	1

Surrogate	*%Recovery*	*Qualifier*	*Limits*	*Prepared*	*Analyzed*	*Dil Fac*
2,4,6-Tribromophenol (Surr)	*88*		*15 - 135*	*12/18/12 11:40*	*12/21/12 00:19*	*1*
2-Fluorobiphenyl	*85*		*34 - 113*	*12/18/12 11:40*	*12/21/12 00:19*	*1*
2-Fluorophenol (Surr)	*53*		*10 - 104*	*12/18/12 11:40*	*12/21/12 00:19*	*1*
Nitrobenzene-d5 (Surr)	*105*		*27 - 110*	*12/18/12 11:40*	*12/21/12 00:19*	*1*
Phenol-d5 (Surr)	*68*		*10 - 110*	*12/18/12 11:40*	*12/21/12 00:19*	*1*
Terphenyl-d14 (Surr)	*87*		*53 - 125*	*12/18/12 11:40*	*12/21/12 00:19*	*1*

Method: 6010C - Metals (ICP)

Analyte	Result	Qualifier	RL	MDL	Unit	D	Prepared	Analyzed	Dil Fac
Arsenic	ND		0.0050		mg/L		12/17/12 10:22	12/18/12 15:02	1
Barium	**0.20**		0.010		mg/L		12/17/12 10:22	12/18/12 15:02	1
Cadmium	ND		0.0050		mg/L		12/17/12 10:22	12/18/12 15:02	1
Chromium	ND		0.0050		mg/L		12/17/12 10:22	12/19/12 15:13	1
Lead	ND		0.0050		mg/L		12/17/12 10:22	12/18/12 15:02	1
Selenium	ND		0.010		mg/L		12/17/12 10:22	12/18/12 15:02	1
Silver	ND		0.0050		mg/L		12/17/12 10:22	12/18/12 15:02	1

Method: 7470A - Mercury (CVAA)

Analyte	Result	Qualifier	RL	MDL	Unit	D	Prepared	Analyzed	Dil Fac
Mercury	ND		0.00020		mg/L		12/19/12 07:35	12/19/12 13:58	1

Client Sample Results

Client: Albemarle Corporation
Project/Site: PAS NON- ROUTINE - Special Project

TestAmerica Job ID: 600-65562-1

Client Sample ID: T816
Date Collected: 12/11/12 13:50
Date Received: 12/12/12 12:45

Lab Sample ID: 600-65562-7
Matrix: Water

Method: 8260B - Volatile Organic Compounds (GC/MS) - TCLP

Analyte	Result	Qualifier	RL	MDL	Unit	D	Prepared	Analyzed	Dil Fac
Benzene	ND		0.10		mg/L			12/14/12 21:48	20
2-Butanone (MEK)	ND		0.20		mg/L			12/14/12 21:48	20
Carbon tetrachloride	ND		0.10		mg/L			12/14/12 21:48	20
Chlorobenzene	ND		0.10		mg/L			12/14/12 21:48	20
Chloroform	ND		0.10		mg/L			12/14/12 21:48	20
1,4-Dichlorobenzene	ND		0.10		mg/L			12/14/12 21:48	20
1,2-Dichloroethane	ND		0.10		mg/L			12/14/12 21:48	20
1,1-Dichloroethene	ND		0.10		mg/L			12/14/12 21:48	20
Tetrachloroethene	ND		0.10		mg/L			12/14/12 21:48	20
Trichloroethene	ND		0.10		mg/L			12/14/12 21:48	20
Vinyl chloride	ND		0.10		mg/L			12/14/12 21:48	20

Surrogate	*%Recovery*	*Qualifier*	*Limits*	*Prepared*	*Analyzed*	*Dil Fac*
4-Bromofluorobenzene	*74*		*67 - 139*		*12/14/12 21:48*	*20*
Dibromofluoromethane	*66*		*62 - 130*		*12/14/12 21:48*	*20*
1,2-Dichloroethane-d4 (Surr)	*68*		*50 - 134*		*12/14/12 21:48*	*20*
Toluene-d8 (Surr)	*76*		*70 - 130*		*12/14/12 21:48*	*20*

Method: 8270D - Semivolatile Organic Compounds (GC/MS) - TCLP

Analyte	Result	Qualifier	RL	MDL	Unit	D	Prepared	Analyzed	Dil Fac
2-Methylphenol	ND		0.040		mg/L		12/18/12 11:40	12/21/12 00:52	1
3 & 4 Methylphenol	ND		0.080		mg/L		12/18/12 11:40	12/21/12 00:52	1
2,4-Dinitrotoluene	ND		0.040		mg/L		12/18/12 11:40	12/21/12 00:52	1
Hexachloroethane	ND		0.040		mg/L		12/18/12 11:40	12/21/12 00:52	1
Hexachlorobutadiene	ND		0.040		mg/L		12/18/12 11:40	12/21/12 00:52	1
Hexachlorobenzene	ND		0.040		mg/L		12/18/12 11:40	12/21/12 00:52	1
Nitrobenzene	ND		0.040		mg/L		12/18/12 11:40	12/21/12 00:52	1
Pentachlorophenol	ND		0.080		mg/L		12/18/12 11:40	12/21/12 00:52	1
2,4,5-Trichlorophenol	ND		0.040		mg/L		12/18/12 11:40	12/21/12 00:52	1
2,4,6-Trichlorophenol	ND		0.040		mg/L		12/18/12 11:40	12/21/12 00:52	1
Pyridine	ND		0.040		mg/L		12/18/12 11:40	12/21/12 00:52	1

Surrogate	*%Recovery*	*Qualifier*	*Limits*	*Prepared*	*Analyzed*	*Dil Fac*
2,4,6-Tribromophenol (Surr)	*96*		*15 - 135*	*12/18/12 11:40*	*12/21/12 00:52*	*1*
2-Fluorobiphenyl	*95*		*34 - 113*	*12/18/12 11:40*	*12/21/12 00:52*	*1*
2-Fluorophenol (Surr)	*59*		*10 - 104*	*12/18/12 11:40*	*12/21/12 00:52*	*1*
Nitrobenzene-d5 (Surr)	*121*	*X*	*27 - 110*	*12/18/12 11:40*	*12/21/12 00:52*	*1*
Phenol-d5 (Surr)	*85*		*10 - 110*	*12/18/12 11:40*	*12/21/12 00:52*	*1*
Terphenyl-d14 (Surr)	*93*		*53 - 125*	*12/18/12 11:40*	*12/21/12 00:52*	*1*

Method: 6010C - Metals (ICP)

Analyte	Result	Qualifier	RL	MDL	Unit	D	Prepared	Analyzed	Dil Fac
Arsenic	ND		0.0050		mg/L		12/17/12 10:22	12/18/12 15:06	1
Barium	**0.074**		0.010		mg/L		12/17/12 10:22	12/18/12 15:06	1
Cadmium	ND		0.0050		mg/L		12/17/12 10:22	12/18/12 15:06	1
Chromium	ND		0.0050		mg/L		12/17/12 10:22	12/19/12 15:16	1
Lead	**0.33**		0.0050		mg/L		12/17/12 10:22	12/18/12 15:06	1
Selenium	ND		0.010		mg/L		12/17/12 10:22	12/18/12 15:06	1
Silver	ND		0.0050		mg/L		12/17/12 10:22	12/18/12 15:06	1

Client Sample Results

Client: Albemarle Corporation
Project/Site: PAS NON- ROUTINE - Special Project

TestAmerica Job ID: 600-65562-1

Client Sample ID: T816
Date Collected: 12/11/12 13:50
Date Received: 12/12/12 12:45

Lab Sample ID: 600-65562-7
Matrix: Water

Method: 7470A - Mercury (CVAA)

Analyte	Result	Qualifier	RL	MDL	Unit	D	Prepared	Analyzed	Dil Fac
Mercury	ND		0.00020		mg/L		12/19/12 07:35	12/19/12 14:00	1

Surrogate Summary

Client: Albemarle Corporation
Project/Site: PAS NON- ROUTINE - Special Project

TestAmerica Job ID: 600-65562-1

Method: 8260B - Volatile Organic Compounds (GC/MS)

Matrix: Water **Prep Type: Total/NA**

		Percent Surrogate Recovery (Acceptance Limits)			
		BFB	DBFM	12DCE	TOL
Lab Sample ID	Client Sample ID	(67-139)	(62-130)	(50-134)	(70-130)
LCS 600-95441/4	Lab Control Sample	90	83	90	94
MB 600-95441/7	Method Blank	78	71	70	83

Surrogate Legend

BFB = 4-Bromofluorobenzene
DBFM = Dibromofluoromethane
12DCE = 1,2-Dichloroethane-d4 (Surr)
TOL = Toluene-d8 (Surr)

Method: 8260B - Volatile Organic Compounds (GC/MS)

Matrix: Water **Prep Type: TCLP**

		Percent Surrogate Recovery (Acceptance Limits)			
		BFB	DBFM	12DCE	TOL
Lab Sample ID	Client Sample ID	(67-139)	(62-130)	(50-134)	(70-130)
600-65562-1	S SOLIDS DECANT	75	68	65	79
600-65562-1 MS	S SOLIDS DECANT	83	76	81	88
600-65562-1 MSD	S SOLIDS DECANT	77	67	74	80
600-65562-2	SP102	76	71	70	84
600-65562-3	MANHOLE 11	77	71	70	81
600-65562-4	SP104	78	71	69	84
600-65562-5	SWB TO PC	77	69	74	83
600-65562-6	SANITARY SEWER	70	69	68	82
600-65562-7	T816	74	66	68	76
LB 600-95282/1-A LB	Method Blank	74	67	66	80

Surrogate Legend

BFB = 4-Bromofluorobenzene
DBFM = Dibromofluoromethane
12DCE = 1,2-Dichloroethane-d4 (Surr)
TOL = Toluene-d8 (Surr)

Method: 8270D - Semivolatile Organic Compounds (GC/MS)

Matrix: Water **Prep Type: Total/NA**

		Percent Surrogate Recovery (Acceptance Limits)					
		TBP	FBP	2FP	NBZ	PHL	TPH
Lab Sample ID	Client Sample ID	(15-135)	(34-113)	(10-104)	(27-110)	(10-110)	(53-125)
LCS 400-169030/2-A	Lab Control Sample	102	101	84	95	106	82

Surrogate Legend

TBP = 2,4,6-Tribromophenol (Surr)
FBP = 2-Fluorobiphenyl
2FP = 2-Fluorophenol (Surr)
NBZ = Nitrobenzene-d5 (Surr)
PHL = Phenol-d5 (Surr)
TPH = Terphenyl-d14 (Surr)

Surrogate Summary

Client: Albemarle Corporation
Project/Site: PAS NON- ROUTINE - Special Project

TestAmerica Job ID: 600-65562-1

Method: 8270D - Semivolatile Organic Compounds (GC/MS)

Matrix: Water **Prep Type: TCLP**

		Percent Surrogate Recovery (Acceptance Limits)					
		TBP	FBP	2FP	NBZ	PHL	TPH
Lab Sample ID	Client Sample ID	(15-135)	(34-113)	(10-104)	(27-110)	(10-110)	(53-125)
600-65562-1	S SOLIDS DECANT	90	85	54	105	78	82
600-65562-1 MS	S SOLIDS DECANT	98	93	63	87	88	85
600-65562-1 MSD	S SOLIDS DECANT	106	98	63	93	93	92
600-65562-2	SP102	90	88	53	84	72	87
600-65562-3	MANHOLE 11	98	92	57	86	81	86
600-65562-4	SP104	97	93	54	90	86	87
600-65562-5	SWB TO PC	100	94	57	92	86	90
600-65562-6	SANITARY SEWER	88	85	53	105	68	87
600-65562-7	T816	96	95	59	121 X	85	93
LB 400-168984/1-B LB	Method Blank	93	92	61	109	85	90

Surrogate Legend

TBP = 2,4,6-Tribromophenol (Surr)
FBP = 2-Fluorobiphenyl
2FP = 2-Fluorophenol (Surr)
NBZ = Nitrobenzene-d5 (Surr)
PHL = Phenol-d5 (Surr)
TPH = Terphenyl-d14 (Surr)

Method: 8260B - Volatile Organic Compounds (GC/MS)

Lab Sample ID: MB 600-95441/7
Matrix: Water
Analysis Batch: 95441

Client Sample ID: Method Blank
Prep Type: Total/NA

Analyte	MB Result	MB Qualifier	RL	MDL	Unit	D	Prepared	Analyzed	Dil Fac
Benzene	ND		0.0050		mg/L			12/14/12 15:51	1
2-Butanone (MEK)	ND		0.010		mg/L			12/14/12 15:51	1
Carbon tetrachloride	ND		0.0050		mg/L			12/14/12 15:51	1
Chlorobenzene	ND		0.0050		mg/L			12/14/12 15:51	1
Chloroform	ND		0.0050		mg/L			12/14/12 15:51	1
1,4-Dichlorobenzene	ND		0.0050		mg/L			12/14/12 15:51	1
1,2-Dichloroethane	ND		0.0050		mg/L			12/14/12 15:51	1
1,1-Dichloroethene	ND		0.0050		mg/L			12/14/12 15:51	1
Tetrachloroethene	ND		0.0050		mg/L			12/14/12 15:51	1
Trichloroethene	ND		0.0050		mg/L			12/14/12 15:51	1
Vinyl chloride	ND		0.0050		mg/L			12/14/12 15:51	1

Surrogate	*MB %Recovery*	*MB Qualifier*	*Limits*	*Prepared*	*Analyzed*	*Dil Fac*
4-Bromofluorobenzene	*78*		*67 - 139*		*12/14/12 15:51*	*1*
Dibromofluoromethane	*71*		*62 - 130*		*12/14/12 15:51*	*1*
1,2-Dichloroethane-d4 (Surr)	*70*		*50 - 134*		*12/14/12 15:51*	*1*
Toluene-d8 (Surr)	*83*		*70 - 130*		*12/14/12 15:51*	*1*

Lab Sample ID: LCS 600-95441/4
Matrix: Water
Analysis Batch: 95441

Client Sample ID: Lab Control Sample
Prep Type: Total/NA

Analyte	Spike Added	LCS Result	LCS Qualifier	Unit	D	%Rec	%Rec. Limits
Benzene	0.0500	0.0535		mg/L		107	69 - 131
2-Butanone (MEK)	0.100	0.102		mg/L		102	59 - 133
Carbon tetrachloride	0.0500	0.0430		mg/L		86	59 - 147
Chlorobenzene	0.0500	0.0520		mg/L		104	60 - 136
Chloroform	0.0500	0.0486		mg/L		97	69 - 128
1,4-Dichlorobenzene	0.0500	0.0462		mg/L		92	72 - 131
1,2-Dichloroethane	0.0500	0.0480		mg/L		96	66 - 140
1,1-Dichloroethene	0.0500	0.0370		mg/L		74	59 - 145
Tetrachloroethene	0.0500	0.0464		mg/L		93	70 - 150
Trichloroethene	0.0500	0.0505		mg/L		101	68 - 130
Vinyl chloride	0.0500	0.0337		mg/L		67	47 - 146

Surrogate	*LCS %Recovery*	*LCS Qualifier*	*Limits*
4-Bromofluorobenzene	*90*		*67 - 139*
Dibromofluoromethane	*83*		*62 - 130*
1,2-Dichloroethane-d4 (Surr)	*90*		*50 - 134*
Toluene-d8 (Surr)	*94*		*70 - 130*

Lab Sample ID: LB 600-95282/1-A LB
Matrix: Water
Analysis Batch: 95441

Client Sample ID: Method Blank
Prep Type: TCLP

Analyte	LB Result	LB Qualifier	RL	MDL	Unit	D	Prepared	Analyzed	Dil Fac
Benzene	ND		0.10		mg/L			12/14/12 15:28	20

Method: 8260B - Volatile Organic Compounds (GC/MS) (Continued)

Lab Sample ID: LB 600-95282/1-A LB — **Client Sample ID: Method Blank**
Matrix: Water — **Prep Type: TCLP**
Analysis Batch: 95441

Analyte	LB Result	LB Qualifier	RL	MDL	Unit	D	Prepared	Analyzed	Dil Fac
2-Butanone (MEK)	ND		0.20		mg/L			12/14/12 15:28	20
Carbon tetrachloride	ND		0.10		mg/L			12/14/12 15:28	20
Chlorobenzene	ND		0.10		mg/L			12/14/12 15:28	20
Chloroform	ND		0.10		mg/L			12/14/12 15:28	20
1,4-Dichlorobenzene	ND		0.10		mg/L			12/14/12 15:28	20
1,2-Dichloroethane	ND		0.10		mg/L			12/14/12 15:28	20
1,1-Dichloroethene	ND		0.10		mg/L			12/14/12 15:28	20
Tetrachloroethene	ND		0.10		mg/L			12/14/12 15:28	20
Trichloroethene	ND		0.10		mg/L			12/14/12 15:28	20
Vinyl chloride	ND		0.10		mg/L			12/14/12 15:28	20

Surrogate	*LB %Recovery*	*LB Qualifier*	*Limits*	*Prepared*	*Analyzed*	*Dil Fac*
4-Bromofluorobenzene	*74*		*67 - 139*		*12/14/12 15:28*	*20*
Dibromofluoromethane	*67*		*62 - 130*		*12/14/12 15:28*	*20*
1,2-Dichloroethane-d4 (Surr)	*66*		*50 - 134*		*12/14/12 15:28*	*20*
Toluene-d8 (Surr)	*80*		*70 - 130*		*12/14/12 15:28*	*20*

Lab Sample ID: 600-65562-1 MS — **Client Sample ID: S SOLIDS DECANT**
Matrix: Water — **Prep Type: TCLP**
Analysis Batch: 95441

Analyte	Sample Result	Sample Qualifier	Spike Added	MS Result	MS Qualifier	Unit	D	%Rec	%Rec. Limits
Benzene	ND		1.00	1.02		mg/L		102	51 - 152
2-Butanone (MEK)	ND		2.00	2.04		mg/L		102	17 - 153
Carbon tetrachloride	ND		1.00	0.871		mg/L		87	49 - 176
Chlorobenzene	ND		1.00	1.02		mg/L		102	74 - 148
Chloroform	ND		1.00	0.954		mg/L		95	70 - 148
1,4-Dichlorobenzene	ND		1.00	0.882		mg/L		88	74 - 139
1,2-Dichloroethane	ND		1.00	0.935		mg/L		93	64 - 158
1,1-Dichloroethene	ND		1.00	0.738		mg/L		74	46 - 168
Tetrachloroethene	ND		1.00	0.921		mg/L		92	38 - 220
Trichloroethene	ND		1.00	0.985		mg/L		98	45 - 189
Vinyl chloride	ND		1.00	0.680		mg/L		68	59 - 138

Surrogate	*MS %Recovery*	*MS Qualifier*	*Limits*
4-Bromofluorobenzene	*83*		*67 - 139*
Dibromofluoromethane	*76*		*62 - 130*
1,2-Dichloroethane-d4 (Surr)	*81*		*50 - 134*
Toluene-d8 (Surr)	*88*		*70 - 130*

Lab Sample ID: 600-65562-1 MSD — **Client Sample ID: S SOLIDS DECANT**
Matrix: Water — **Prep Type: TCLP**
Analysis Batch: 95441

Analyte	Sample Result	Sample Qualifier	Spike Added	MSD Result	MSD Qualifier	Unit	D	%Rec	%Rec. Limits	RPD	RPD Limit
Benzene	ND		1.00	0.961		mg/L		96	51 - 152	6	21
2-Butanone (MEK)	ND		2.00	1.70		mg/L		85	17 - 153	18	25
Carbon tetrachloride	ND		1.00	0.800		mg/L		80	49 - 176	9	25

Method: 8260B - Volatile Organic Compounds (GC/MS) (Continued)

Lab Sample ID: 600-65562-1 MSD
Matrix: Water
Analysis Batch: 95441

Client Sample ID: S SOLIDS DECANT
Prep Type: TCLP

Analyte	Sample Result	Sample Qualifier	Spike Added	MSD Result	MSD Qualifier	Unit	D	%Rec	%Rec. Limits	RPD	RPD Limit
Chlorobenzene	ND		1.00	0.976		mg/L		98	74 - 148	5	21
Chloroform	ND		1.00	0.887		mg/L		89	70 - 148	7	25
1,4-Dichlorobenzene	ND		1.00	0.916		mg/L		92	74 - 139	4	25
1,2-Dichloroethane	ND		1.00	0.876		mg/L		88	64 - 158	6	25
1,1-Dichloroethene	ND		1.00	0.670		mg/L		67	46 - 168	10	22
Tetrachloroethene	ND		1.00	0.884		mg/L		88	38 - 220	4	25
Trichloroethene	ND		1.00	0.959		mg/L		96	45 - 189	3	24
Vinyl chloride	ND		1.00	0.612		mg/L		61	59 - 138	10	25

Surrogate	*MSD %Recovery*	*MSD Qualifier*	*Limits*
4-Bromofluorobenzene	*77*		*67 - 139*
Dibromofluoromethane	*67*		*62 - 130*
1,2-Dichloroethane-d4 (Surr)	*74*		*50 - 134*
Toluene-d8 (Surr)	*80*		*70 - 130*

Method: 8270D - Semivolatile Organic Compounds (GC/MS)

Lab Sample ID: LCS 400-169030/2-A
Matrix: Water
Analysis Batch: 169300

Client Sample ID: Lab Control Sample
Prep Type: Total/NA
Prep Batch: 169030

Analyte	Spike Added	LCS Result	LCS Qualifier	Unit	D	%Rec	%Rec. Limits
2-Methylphenol	0.0500	0.0428		mg/L		86	44 - 100
3 & 4 Methylphenol	0.100	0.0894		mg/L		89	38 - 110
2,4-Dinitrotoluene	0.0500	0.0507		mg/L		101	59 - 113
Hexachloroethane	0.0500	0.0341		mg/L		68	37 - 99
Hexachlorobutadiene	0.0500	0.0389		mg/L		78	40 - 110
Hexachlorobenzene	0.0500	0.0469		mg/L		94	47 - 131
Nitrobenzene	0.0500	0.0463		mg/L		93	46 - 110
Pentachlorophenol	0.0500	0.0515		mg/L		103	14 - 147
2,4,5-Trichlorophenol	0.0500	0.0504		mg/L		101	48 - 111
2,4,6-Trichlorophenol	0.0500	0.0506		mg/L		101	48 - 111
Pyridine	0.0500	0.0360		mg/L		72	10 - 109

Surrogate	*LCS %Recovery*	*LCS Qualifier*	*Limits*
2,4,6-Tribromophenol (Surr)	*102*		*15 - 135*
2-Fluorobiphenyl	*101*		*34 - 113*
2-Fluorophenol (Surr)	*84*		*10 - 104*
Nitrobenzene-d5 (Surr)	*95*		*27 - 110*
Phenol-d5 (Surr)	*106*		*10 - 110*
Terphenyl-d14 (Surr)	*82*		*53 - 125*

Method: 8270D - Semivolatile Organic Compounds (GC/MS) (Continued)

Lab Sample ID: LB 400-168984/1-B LB
Matrix: Water
Analysis Batch: 169300

Client Sample ID: Method Blank
Prep Type: TCLP
Prep Batch: 169030

Analyte	LB Result	LB Qualifier	RL	MDL	Unit	D	Prepared	Analyzed	Dil Fac
2-Methylphenol	ND		0.040		mg/L		12/18/12 11:40	12/20/12 19:19	1
3 & 4 Methylphenol	ND		0.080		mg/L		12/18/12 11:40	12/20/12 19:19	1
2,4-Dinitrotoluene	ND		0.040		mg/L		12/18/12 11:40	12/20/12 19:19	1
Hexachloroethane	ND		0.040		mg/L		12/18/12 11:40	12/20/12 19:19	1
Hexachlorobutadiene	ND		0.040		mg/L		12/18/12 11:40	12/20/12 19:19	1
Hexachlorobenzene	ND		0.040		mg/L		12/18/12 11:40	12/20/12 19:19	1
Nitrobenzene	ND		0.040		mg/L		12/18/12 11:40	12/20/12 19:19	1
Pentachlorophenol	ND		0.080		mg/L		12/18/12 11:40	12/20/12 19:19	1
2,4,5-Trichlorophenol	ND		0.040		mg/L		12/18/12 11:40	12/20/12 19:19	1
2,4,6-Trichlorophenol	ND		0.040		mg/L		12/18/12 11:40	12/20/12 19:19	1
Pyridine	ND		0.040		mg/L		12/18/12 11:40	12/20/12 19:19	1

Surrogate	*LB %Recovery*	*LB Qualifier*	*Limits*	*Prepared*	*Analyzed*	*Dil Fac*
2,4,6-Tribromophenol (Surr)	*93*		*15 - 135*	*12/18/12 11:40*	*12/20/12 19:19*	*1*
2-Fluorobiphenyl	*92*		*34 - 113*	*12/18/12 11:40*	*12/20/12 19:19*	*1*
2-Fluorophenol (Surr)	*61*		*10 - 104*	*12/18/12 11:40*	*12/20/12 19:19*	*1*
Nitrobenzene-d5 (Surr)	*109*		*27 - 110*	*12/18/12 11:40*	*12/20/12 19:19*	*1*
Phenol-d5 (Surr)	*85*		*10 - 110*	*12/18/12 11:40*	*12/20/12 19:19*	*1*
Terphenyl-d14 (Surr)	*90*		*53 - 125*	*12/18/12 11:40*	*12/20/12 19:19*	*1*

Lab Sample ID: 600-65562-1 MS
Matrix: Water
Analysis Batch: 169300

Client Sample ID: S SOLIDS DECANT
Prep Type: TCLP
Prep Batch: 169030

Analyte	Sample Result	Sample Qualifier	Spike Added	MS Result	MS Qualifier	Unit	D	%Rec	%Rec. Limits
2-Methylphenol	0.12		0.200	0.228		mg/L		55	28 - 93
3 & 4 Methylphenol	ND		0.400	0.312		mg/L		64	31 - 93
2,4-Dinitrotoluene	ND		0.200	0.178		mg/L		89	53 - 111
Hexachloroethane	ND		0.200	0.0994		mg/L		50	10 - 150
Hexachlorobutadiene	ND		0.200	0.143		mg/L		71	30 - 107
Hexachlorobenzene	ND		0.200	0.171		mg/L		86	38 - 122
Nitrobenzene	ND		0.200	0.167		mg/L		84	39 - 111
Pentachlorophenol	ND		0.200	0.208		mg/L		104	29 - 130
2,4,5-Trichlorophenol	ND		0.200	0.193	F	mg/L		97	34 - 96
2,4,6-Trichlorophenol	ND		0.200	0.192		mg/L		96	33 - 97
Pyridine	ND		0.200	0.101		mg/L		50	10 - 111

Surrogate	*MS %Recovery*	*MS Qualifier*	*Limits*
2,4,6-Tribromophenol (Surr)	*98*		*15 - 135*
2-Fluorobiphenyl	*93*		*34 - 113*
2-Fluorophenol (Surr)	*63*		*10 - 104*
Nitrobenzene-d5 (Surr)	*87*		*27 - 110*
Phenol-d5 (Surr)	*88*		*10 - 110*
Terphenyl-d14 (Surr)	*85*		*53 - 125*

Method: 8270D - Semivolatile Organic Compounds (GC/MS) (Continued)

Lab Sample ID: 600-65562-1 MSD
Matrix: Water
Analysis Batch: 169300

Client Sample ID: S SOLIDS DECANT
Prep Type: TCLP
Prep Batch: 169030

Analyte	Sample Result	Sample Qualifier	Spike Added	MSD Result	MSD Qualifier	Unit	D	%Rec	%Rec. Limits	RPD	RPD Limit
2-Methylphenol	0.12		0.200	0.241		mg/L		62	28 - 93	6	47
3 & 4 Methylphenol	ND		0.400	0.333		mg/L		70	31 - 93	6	47
2,4-Dinitrotoluene	ND		0.200	0.195		mg/L		97	53 - 111	9	28
Hexachloroethane	ND		0.200	0.109		mg/L		54	10 - 150	9	41
Hexachlorobutadiene	ND		0.200	0.154		mg/L		77	30 - 107	8	36
Hexachlorobenzene	ND		0.200	0.186		mg/L		93	38 - 122	8	33
Nitrobenzene	ND		0.200	0.180		mg/L		90	39 - 111	7	35
Pentachlorophenol	ND		0.200	0.226		mg/L		113	29 - 130	8	42
2,4,5-Trichlorophenol	ND		0.200	0.212	F	mg/L		106	34 - 96	10	42
2,4,6-Trichlorophenol	ND		0.200	0.211	F	mg/L		106	33 - 97	10	44
Pyridine	ND		0.200	0.116		mg/L		58	10 - 111	15	55

Surrogate	*MSD %Recovery*	*MSD Qualifier*	*Limits*
2,4,6-Tribromophenol (Surr)	*106*		*15 - 135*
2-Fluorobiphenyl	*98*		*34 - 113*
2-Fluorophenol (Surr)	*63*		*10 - 104*
Nitrobenzene-d5 (Surr)	*93*		*27 - 110*
Phenol-d5 (Surr)	*93*		*10 - 110*
Terphenyl-d14 (Surr)	*92*		*53 - 125*

Method: 6010C - Metals (ICP)

Lab Sample ID: MB 400-168906/1-A
Matrix: Water
Analysis Batch: 169091

Client Sample ID: Method Blank
Prep Type: Total/NA
Prep Batch: 168906

Analyte	MB Result	MB Qualifier	RL	MDL	Unit	D	Prepared	Analyzed	Dil Fac
Arsenic	ND		0.0050		mg/L		12/17/12 10:22	12/18/12 14:18	1
Barium	ND		0.010		mg/L		12/17/12 10:22	12/18/12 14:18	1
Cadmium	ND		0.0050		mg/L		12/17/12 10:22	12/18/12 14:18	1
Chromium	ND		0.0050		mg/L		12/17/12 10:22	12/18/12 14:18	1
Lead	ND		0.0050		mg/L		12/17/12 10:22	12/18/12 14:18	1
Selenium	ND		0.010		mg/L		12/17/12 10:22	12/18/12 14:18	1
Silver	ND		0.0050		mg/L		12/17/12 10:22	12/18/12 14:18	1

Lab Sample ID: LCS 400-168906/2-A
Matrix: Water
Analysis Batch: 169091

Client Sample ID: Lab Control Sample
Prep Type: Total/NA
Prep Batch: 168906

Analyte	Spike Added	LCS Result	LCS Qualifier	Unit	D	%Rec	%Rec. Limits
Arsenic	1.00	0.948		mg/L		95	80 - 120
Barium	1.00	1.01		mg/L		101	80 - 120
Cadmium	0.500	0.479		mg/L		96	80 - 120
Chromium	1.00	0.994		mg/L		99	80 - 120
Lead	1.00	0.966		mg/L		97	80 - 120
Selenium	1.00	0.906		mg/L		91	80 - 120
Silver	0.500	0.489		mg/L		98	80 - 120

Method: 6010C - Metals (ICP) (Continued)

Lab Sample ID: 600-65562-1 MS — **Client Sample ID: S SOLIDS DECANT**
Matrix: Water — **Prep Type: Total/NA**
Analysis Batch: 169091 — **Prep Batch: 168906**

Analyte	Sample Result	Sample Qualifier	Spike Added	MS Result	MS Qualifier	Unit	D	%Rec	%Rec. Limits
Arsenic	ND		1.00	1.15		mg/L		115	75 - 125
Barium	0.016		1.00	1.01		mg/L		99	75 - 125
Cadmium	ND		0.500	0.579		mg/L		116	75 - 125
Chromium	0.024		1.00	0.918		mg/L		89	75 - 125
Lead	0.011		1.00	1.05		mg/L		104	75 - 125
Selenium	ND		1.00	1.17		mg/L		117	75 - 125
Silver	ND		0.500	0.633	F	mg/L		127	75 - 125

Lab Sample ID: 600-65562-1 MSD — **Client Sample ID: S SOLIDS DECANT**
Matrix: Water — **Prep Type: Total/NA**
Analysis Batch: 169091 — **Prep Batch: 168906**

Analyte	Sample Result	Sample Qualifier	Spike Added	MSD Result	MSD Qualifier	Unit	D	%Rec	%Rec. Limits	RPD	RPD Limit
Arsenic	ND		1.00	1.14		mg/L		114	75 - 125	1	20
Barium	0.016		1.00	1.02		mg/L		101	75 - 125	1	20
Cadmium	ND		0.500	0.575		mg/L		115	75 - 125	1	20
Chromium	0.024		1.00	0.924		mg/L		90	75 - 125	1	20
Lead	0.011		1.00	1.04		mg/L		103	75 - 125	1	20
Selenium	ND		1.00	1.16		mg/L		116	75 - 125	1	20
Silver	ND		0.500	0.640	F	mg/L		128	75 - 125	1	20

Method: 7470A - Mercury (CVAA)

Lab Sample ID: MB 400-169095/14-A — **Client Sample ID: Method Blank**
Matrix: Water — **Prep Type: Total/NA**
Analysis Batch: 169154 — **Prep Batch: 169095**

Analyte	MB Result	MB Qualifier	RL	MDL	Unit	D	Prepared	Analyzed	Dil Fac
Mercury	ND		0.00020		mg/L		12/19/12 07:35	12/19/12 13:28	1

Lab Sample ID: LCS 400-169095/15-A — **Client Sample ID: Lab Control Sample**
Matrix: Water — **Prep Type: Total/NA**
Analysis Batch: 169154 — **Prep Batch: 169095**

Analyte	Spike Added	LCS Result	LCS Qualifier	Unit	D	%Rec	%Rec. Limits
Mercury	0.00100	0.000996		mg/L		99	80 - 120

QC Association Summary

Client: Albemarle Corporation
Project/Site: PAS NON- ROUTINE - Special Project

TestAmerica Job ID: 600-65562-1

GC/MS VOA

Leach Batch: 95282

Lab Sample ID	Client Sample ID	Prep Type	Matrix	Method	Prep Batch
600-65562-1	S SOLIDS DECANT	TCLP	Water	1311	
600-65562-1 MS	S SOLIDS DECANT	TCLP	Water	1311	
600-65562-1 MSD	S SOLIDS DECANT	TCLP	Water	1311	
600-65562-2	SP102	TCLP	Water	1311	
600-65562-3	MANHOLE 11	TCLP	Water	1311	
600-65562-4	SP104	TCLP	Water	1311	
600-65562-5	SWB TO PC	TCLP	Water	1311	
600-65562-6	SANITARY SEWER	TCLP	Water	1311	
600-65562-7	T816	TCLP	Water	1311	
LB 600-95282/1-A LB	Method Blank	TCLP	Water	1311	

Analysis Batch: 95441

Lab Sample ID	Client Sample ID	Prep Type	Matrix	Method	Prep Batch
600-65562-1	S SOLIDS DECANT	TCLP	Water	8260B	95282
600-65562-1 MS	S SOLIDS DECANT	TCLP	Water	8260B	95282
600-65562-1 MSD	S SOLIDS DECANT	TCLP	Water	8260B	95282
600-65562-2	SP102	TCLP	Water	8260B	95282
600-65562-3	MANHOLE 11	TCLP	Water	8260B	95282
600-65562-4	SP104	TCLP	Water	8260B	95282
600-65562-5	SWB TO PC	TCLP	Water	8260B	95282
600-65562-6	SANITARY SEWER	TCLP	Water	8260B	95282
600-65562-7	T816	TCLP	Water	8260B	95282
LB 600-95282/1-A LB	Method Blank	TCLP	Water	8260B	95282
LCS 600-95441/4	Lab Control Sample	Total/NA	Water	8260B	
MB 600-95441/7	Method Blank	Total/NA	Water	8260B	

GC/MS Semi VOA

Leach Batch: 168984

Lab Sample ID	Client Sample ID	Prep Type	Matrix	Method	Prep Batch
600-65562-1	S SOLIDS DECANT	TCLP	Water	1311	
600-65562-1 MS	S SOLIDS DECANT	TCLP	Water	1311	
600-65562-1 MSD	S SOLIDS DECANT	TCLP	Water	1311	
600-65562-2	SP102	TCLP	Water	1311	
600-65562-3	MANHOLE 11	TCLP	Water	1311	
600-65562-4	SP104	TCLP	Water	1311	
600-65562-5	SWB TO PC	TCLP	Water	1311	
600-65562-6	SANITARY SEWER	TCLP	Water	1311	
600-65562-7	T816	TCLP	Water	1311	
LB 400-168984/1-B LB	Method Blank	TCLP	Water	1311	

Prep Batch: 169030

Lab Sample ID	Client Sample ID	Prep Type	Matrix	Method	Prep Batch
600-65562-1	S SOLIDS DECANT	TCLP	Water	3520C	168984
600-65562-1 MS	S SOLIDS DECANT	TCLP	Water	3520C	168984
600-65562-1 MSD	S SOLIDS DECANT	TCLP	Water	3520C	168984
600-65562-2	SP102	TCLP	Water	3520C	168984
600-65562-3	MANHOLE 11	TCLP	Water	3520C	168984
600-65562-4	SP104	TCLP	Water	3520C	168984
600-65562-5	SWB TO PC	TCLP	Water	3520C	168984

GC/MS Semi VOA (Continued)

Prep Batch: 169030 (Continued)

Lab Sample ID	Client Sample ID	Prep Type	Matrix	Method	Prep Batch
600-65562-6	SANITARY SEWER	TCLP	Water	3520C	168984
600-65562-7	T816	TCLP	Water	3520C	168984
LB 400-168984/1-B LB	Method Blank	TCLP	Water	3520C	168984
LCS 400-169030/2-A	Lab Control Sample	Total/NA	Water	3520C	

Analysis Batch: 169300

Lab Sample ID	Client Sample ID	Prep Type	Matrix	Method	Prep Batch
600-65562-1	S SOLIDS DECANT	TCLP	Water	8270D	169030
600-65562-1 MS	S SOLIDS DECANT	TCLP	Water	8270D	169030
600-65562-1 MSD	S SOLIDS DECANT	TCLP	Water	8270D	169030
600-65562-2	SP102	TCLP	Water	8270D	169030
600-65562-3	MANHOLE 11	TCLP	Water	8270D	169030
600-65562-4	SP104	TCLP	Water	8270D	169030
600-65562-5	SWB TO PC	TCLP	Water	8270D	169030
600-65562-6	SANITARY SEWER	TCLP	Water	8270D	169030
600-65562-7	T816	TCLP	Water	8270D	169030
LB 400-168984/1-B LB	Method Blank	TCLP	Water	8270D	169030
LCS 400-169030/2-A	Lab Control Sample	Total/NA	Water	8270D	169030

Metals

Prep Batch: 168906

Lab Sample ID	Client Sample ID	Prep Type	Matrix	Method	Prep Batch
600-65562-1	S SOLIDS DECANT	Total/NA	Water	3010A	
600-65562-1 MS	S SOLIDS DECANT	Total/NA	Water	3010A	
600-65562-1 MSD	S SOLIDS DECANT	Total/NA	Water	3010A	
600-65562-2	SP102	Total/NA	Water	3010A	
600-65562-3	MANHOLE 11	Total/NA	Water	3010A	
600-65562-4	SP104	Total/NA	Water	3010A	
600-65562-5	SWB TO PC	Total/NA	Water	3010A	
600-65562-6	SANITARY SEWER	Total/NA	Water	3010A	
600-65562-7	T816	Total/NA	Water	3010A	
LCS 400-168906/2-A	Lab Control Sample	Total/NA	Water	3010A	
MB 400-168906/1-A	Method Blank	Total/NA	Water	3010A	

Analysis Batch: 169091

Lab Sample ID	Client Sample ID	Prep Type	Matrix	Method	Prep Batch
600-65562-1	S SOLIDS DECANT	Total/NA	Water	6010C	168906
600-65562-1 MS	S SOLIDS DECANT	Total/NA	Water	6010C	168906
600-65562-1 MSD	S SOLIDS DECANT	Total/NA	Water	6010C	168906
600-65562-2	SP102	Total/NA	Water	6010C	168906
600-65562-3	MANHOLE 11	Total/NA	Water	6010C	168906
600-65562-4	SP104	Total/NA	Water	6010C	168906
600-65562-5	SWB TO PC	Total/NA	Water	6010C	168906
600-65562-6	SANITARY SEWER	Total/NA	Water	6010C	168906
600-65562-7	T816	Total/NA	Water	6010C	168906
LCS 400-168906/2-A	Lab Control Sample	Total/NA	Water	6010C	168906
MB 400-168906/1-A	Method Blank	Total/NA	Water	6010C	168906

QC Association Summary

Client: Albemarle Corporation
Project/Site: PAS NON- ROUTINE - Special Project

TestAmerica Job ID: 600-65562-1

Metals (Continued)

Prep Batch: 169095

Lab Sample ID	Client Sample ID	Prep Type	Matrix	Method	Prep Batch
600-65562-1	S SOLIDS DECANT	Total/NA	Water	7470A	
600-65562-2	SP102	Total/NA	Water	7470A	
600-65562-3	MANHOLE 11	Total/NA	Water	7470A	
600-65562-4	SP104	Total/NA	Water	7470A	
600-65562-5	SWB TO PC	Total/NA	Water	7470A	
600-65562-6	SANITARY SEWER	Total/NA	Water	7470A	
600-65562-7	T816	Total/NA	Water	7470A	
LCS 400-169095/15-A	Lab Control Sample	Total/NA	Water	7470A	
MB 400-169095/14-A	Method Blank	Total/NA	Water	7470A	

Analysis Batch: 169154

Lab Sample ID	Client Sample ID	Prep Type	Matrix	Method	Prep Batch
600-65562-1	S SOLIDS DECANT	Total/NA	Water	7470A	169095
600-65562-2	SP102	Total/NA	Water	7470A	169095
600-65562-3	MANHOLE 11	Total/NA	Water	7470A	169095
600-65562-4	SP104	Total/NA	Water	7470A	169095
600-65562-5	SWB TO PC	Total/NA	Water	7470A	169095
600-65562-6	SANITARY SEWER	Total/NA	Water	7470A	169095
600-65562-7	T816	Total/NA	Water	7470A	169095
LCS 400-169095/15-A	Lab Control Sample	Total/NA	Water	7470A	169095
MB 400-169095/14-A	Method Blank	Total/NA	Water	7470A	169095

Analysis Batch: 169203

Lab Sample ID	Client Sample ID	Prep Type	Matrix	Method	Prep Batch
600-65562-1	S SOLIDS DECANT	Total/NA	Water	6010C	168906
600-65562-1	S SOLIDS DECANT	Total/NA	Water	6010C	168906
600-65562-2	SP102	Total/NA	Water	6010C	168906
600-65562-3	MANHOLE 11	Total/NA	Water	6010C	168906
600-65562-4	SP104	Total/NA	Water	6010C	168906
600-65562-5	SWB TO PC	Total/NA	Water	6010C	168906
600-65562-6	SANITARY SEWER	Total/NA	Water	6010C	168906
600-65562-7	T816	Total/NA	Water	6010C	168906

Lab Chronicle

Client: Albemarle Corporation
Project/Site: PAS NON- ROUTINE - Special Project

TestAmerica Job ID: 600-65562-1

Client Sample ID: S SOLIDS DECANT

Lab Sample ID: 600-65562-1
Date Collected: 12/06/12 14:45
Matrix: Water
Date Received: 12/12/12 12:45

Prep Type	Batch Type	Batch Method	Run	Dil Factor	Initial Amount	Final Amount	Batch Number	Prepared or Analyzed	Analyst	Lab
TCLP	Leach	1311			1.0 g	1.0 mL	95282	12/13/12 12:26	CD	TAL HOU
TCLP	Analysis	8260B		20	5 mL	5 mL	95441	12/14/12 18:10	KLV	TAL HOU
TCLP	Leach	1311			1.0 g	1.0 mL	168984	12/18/12 08:12	LW	TAL PEN
TCLP	Prep	3520C			250 mL	1.0 mL	169030	12/18/12 11:40	KH	TAL PEN
TCLP	Analysis	8270D		1			169300	12/20/12 21:33	DW	TAL PEN
Total/NA	Prep	3010A			50 mL	50 mL	168906	12/17/12 10:22	KN	TAL PEN
Total/NA	Analysis	6010C		1			169091	12/18/12 14:25	GS	TAL PEN
Total/NA	Prep	7470A			40 mL	40 mL	169095	12/19/12 07:35	BG	TAL PEN
Total/NA	Analysis	7470A		1			169154	12/19/12 13:51	BG	TAL PEN
Total/NA	Analysis	6010C		1			169203	12/19/12 14:54	GS	TAL PEN
Total/NA	Analysis	6010C		5			169203	12/19/12 14:57	GS	TAL PEN

Client Sample ID: SP102

Lab Sample ID: 600-65562-2
Date Collected: 12/06/12 14:15
Matrix: Water
Date Received: 12/12/12 12:45

Prep Type	Batch Type	Batch Method	Run	Dil Factor	Initial Amount	Final Amount	Batch Number	Prepared or Analyzed	Analyst	Lab
TCLP	Leach	1311			1.0 g	1.0 mL	95282	12/13/12 12:26	CD	TAL HOU
TCLP	Analysis	8260B		20	5 mL	5 mL	95441	12/14/12 19:47	KLV	TAL HOU
TCLP	Leach	1311			1.0 g	1.0 mL	168984	12/18/12 08:12	LW	TAL PEN
TCLP	Prep	3520C			250 mL	1.0 mL	169030	12/18/12 11:40	KH	TAL PEN
TCLP	Analysis	8270D		1			169300	12/20/12 22:06	DW	TAL PEN
Total/NA	Prep	3010A			50 mL	50 mL	168906	12/17/12 10:22	KN	TAL PEN
Total/NA	Analysis	6010C		1			169091	12/18/12 14:50	GS	TAL PEN
Total/NA	Prep	7470A			40 mL	40 mL	169095	12/19/12 07:35	BG	TAL PEN
Total/NA	Analysis	7470A		1			169154	12/19/12 13:52	BG	TAL PEN
Total/NA	Analysis	6010C		1			169203	12/19/12 15:00	GS	TAL PEN

Client Sample ID: MANHOLE 11

Lab Sample ID: 600-65562-3
Date Collected: 12/06/12 11:45
Matrix: Water
Date Received: 12/12/12 12:45

Prep Type	Batch Type	Batch Method	Run	Dil Factor	Initial Amount	Final Amount	Batch Number	Prepared or Analyzed	Analyst	Lab
TCLP	Leach	1311			1.0 g	1.0 mL	95282	12/13/12 12:26	CD	TAL HOU
TCLP	Analysis	8260B		20	5 mL	5 mL	95441	12/14/12 20:11	KLV	TAL HOU
TCLP	Leach	1311			1.0 g	1.0 mL	168984	12/18/12 08:12	LW	TAL PEN
TCLP	Prep	3520C			250 mL	1.0 mL	169030	12/18/12 11:40	KH	TAL PEN
TCLP	Analysis	8270D		1			169300	12/20/12 22:39	DW	TAL PEN
Total/NA	Prep	3010A			50 mL	50 mL	168906	12/17/12 10:22	KN	TAL PEN
Total/NA	Analysis	6010C		1			169091	12/18/12 14:53	GS	TAL PEN
Total/NA	Prep	7470A			40 mL	40 mL	169095	12/19/12 07:35	BG	TAL PEN
Total/NA	Analysis	7470A		1			169154	12/19/12 13:54	BG	TAL PEN
Total/NA	Analysis	6010C		1			169203	12/19/12 15:03	GS	TAL PEN

Lab Chronicle

Client: Albemarle Corporation
Project/Site: PAS NON- ROUTINE - Special Project

TestAmerica Job ID: 600-65562-1

Client Sample ID: SP104

Lab Sample ID: 600-65562-4
Matrix: Water

Date Collected: 12/06/12 12:52
Date Received: 12/12/12 12:45

Prep Type	Batch Type	Batch Method	Run	Dil Factor	Initial Amount	Final Amount	Batch Number	Prepared or Analyzed	Analyst	Lab
TCLP	Leach	1311			1.0 g	1.0 mL	95282	12/13/12 12:26	CD	TAL HOU
TCLP	Analysis	8260B		20	5 mL	5 mL	95441	12/14/12 20:35	KLV	TAL HOU
TCLP	Leach	1311			1.0 g	1.0 mL	168984	12/18/12 08:12	LW	TAL PEN
TCLP	Prep	3520C			250 mL	1.0 mL	169030	12/18/12 11:40	KH	TAL PEN
TCLP	Analysis	8270D		1			169300	12/20/12 23:13	DW	TAL PEN
Total/NA	Prep	3010A			50 mL	50 mL	168906	12/17/12 10:22	KN	TAL PEN
Total/NA	Analysis	6010C		1			169091	12/18/12 14:56	GS	TAL PEN
Total/NA	Prep	7470A			40 mL	40 mL	169095	12/19/12 07:35	BG	TAL PEN
Total/NA	Analysis	7470A		1			169154	12/19/12 13:56	BG	TAL PEN
Total/NA	Analysis	6010C		1			169203	12/19/12 15:06	GS	TAL PEN

Client Sample ID: SWB TO PC

Lab Sample ID: 600-65562-5
Matrix: Water

Date Collected: 12/07/12 09:45
Date Received: 12/12/12 12:45

Prep Type	Batch Type	Batch Method	Run	Dil Factor	Initial Amount	Final Amount	Batch Number	Prepared or Analyzed	Analyst	Lab
TCLP	Leach	1311			1.0 g	1.0 mL	95282	12/13/12 12:26	CD	TAL HOU
TCLP	Analysis	8260B		20	5 mL	5 mL	95441	12/14/12 21:00	KLV	TAL HOU
TCLP	Leach	1311			1.0 g	1.0 mL	168984	12/18/12 08:12	LW	TAL PEN
TCLP	Prep	3520C			250 mL	1.0 mL	169030	12/18/12 11:40	KH	TAL PEN
TCLP	Analysis	8270D		1			169300	12/20/12 23:46	DW	TAL PEN
Total/NA	Prep	3010A			50 mL	50 mL	168906	12/17/12 10:22	KN	TAL PEN
Total/NA	Analysis	6010C		1			169091	12/18/12 14:59	GS	TAL PEN
Total/NA	Prep	7470A			40 mL	40 mL	169095	12/19/12 07:35	BG	TAL PEN
Total/NA	Analysis	7470A		1			169154	12/19/12 13:57	BG	TAL PEN
Total/NA	Analysis	6010C		1			169203	12/19/12 15:09	GS	TAL PEN

Client Sample ID: SANITARY SEWER

Lab Sample ID: 600-65562-6
Matrix: Water

Date Collected: 12/10/12 14:15
Date Received: 12/12/12 12:45

Prep Type	Batch Type	Batch Method	Run	Dil Factor	Initial Amount	Final Amount	Batch Number	Prepared or Analyzed	Analyst	Lab
TCLP	Leach	1311			1.0 g	1.0 mL	95282	12/13/12 12:26	CD	TAL HOU
TCLP	Analysis	8260B		20	5 mL	5 mL	95441	12/14/12 21:24	KLV	TAL HOU
TCLP	Leach	1311			1.0 g	1.0 mL	168984	12/18/12 08:12	LW	TAL PEN
TCLP	Prep	3520C			250 mL	1.0 mL	169030	12/18/12 11:40	KH	TAL PEN
TCLP	Analysis	8270D		1			169300	12/21/12 00:19	DW	TAL PEN
Total/NA	Prep	3010A			50 mL	50 mL	168906	12/17/12 10:22	KN	TAL PEN
Total/NA	Analysis	6010C		1			169091	12/18/12 15:02	GS	TAL PEN
Total/NA	Prep	7470A			40 mL	40 mL	169095	12/19/12 07:35	BG	TAL PEN
Total/NA	Analysis	7470A		1			169154	12/19/12 13:58	BG	TAL PEN
Total/NA	Analysis	6010C		1			169203	12/19/12 15:13	GS	TAL PEN

Lab Chronicle

Client: Albemarle Corporation
Project/Site: PAS NON- ROUTINE - Special Project

TestAmerica Job ID: 600-65562-1

Client Sample ID: T816

Date Collected: 12/11/12 13:50
Date Received: 12/12/12 12:45

Lab Sample ID: 600-65562-7

Matrix: Water

Prep Type	Batch Type	Batch Method	Run	Dil Factor	Initial Amount	Final Amount	Batch Number	Prepared or Analyzed	Analyst	Lab
TCLP	Leach	1311			1.0 g	1.0 mL	95282	12/13/12 12:26	CD	TAL HOU
TCLP	Analysis	8260B		20	5 mL	5 mL	95441	12/14/12 21:48	KLV	TAL HOU
TCLP	Leach	1311			1.0 g	1.0 mL	168984	12/18/12 08:12	LW	TAL PEN
TCLP	Prep	3520C			250 mL	1.0 mL	169030	12/18/12 11:40	KH	TAL PEN
TCLP	Analysis	8270D		1			169300	12/21/12 00:52	DW	TAL PEN
Total/NA	Prep	3010A			50 mL	50 mL	168906	12/17/12 10:22	KN	TAL PEN
Total/NA	Analysis	6010C		1			169091	12/18/12 15:06	GS	TAL PEN
Total/NA	Prep	7470A			40 mL	40 mL	169095	12/19/12 07:35	BG	TAL PEN
Total/NA	Analysis	7470A		1			169154	12/19/12 14:00	BG	TAL PEN
Total/NA	Analysis	6010C		1			169203	12/19/12 15:16	GS	TAL PEN

Laboratory References:

TAL HOU = TestAmerica Houston, 6310 Rothway Street, Houston, TX 77040, TEL (713)690-4444

TAL PEN = TestAmerica Pensacola, 3355 McLemore Drive, Pensacola, FL 32514, TEL (850)474-1001

Certification Summary

Client: Albemarle Corporation
Project/Site: PAS NON- ROUTINE - Special Project

TestAmerica Job ID: 600-65562-1

Laboratory: TestAmerica Houston

All certifications held by this laboratory are listed. Not all certifications are applicable to this report.

Authority	Program	EPA Region	Certification ID	Expiration Date
Arkansas DEQ	State Program	6	88-0759	08-04-12
Louisiana	NELAP	6	01967	06-30-13
Oklahoma	State Program	6	9503	08-31-13
Texas	NELAP	6	T104704223-10-6-TX	10-31-13
USDA	Federal		P330-08-00217	04-01-14
Utah	NELAP	8	GULF	10-31-13

Laboratory: TestAmerica Pensacola

All certifications held by this laboratory are listed. Not all certifications are applicable to this report.

Authority	Program	EPA Region	Certification ID	Expiration Date
Alabama	State Program	4	40150	06-30-13
Arizona	State Program	9	AZ0710	01-11-13
Arkansas DEQ	State Program	6	88-0689	09-01-13
Florida	NELAP	4	E81010	06-30-13
Georgia	State Program	4	N/A	06-30-13
Illinois	NELAP	5	200041	10-09-13
Iowa	State Program	7	367	08-01-14
Kansas	NELAP	7	E-10253	10-31-13
Kentucky (UST)	State Program	4	53	07-05-13
Louisiana	NELAP	6	30976	06-30-13
Maryland	State Program	3	233	09-30-13
Massachusetts	State Program	1	M-FL094	06-30-13
Michigan	State Program	5	9912	06-30-13
New Hampshire	NELAP	1	2505	08-16-13
New Jersey	NELAP	2	FL006	06-30-13
North Carolina DENR	State Program	4	314	12-31-12
Oklahoma	State Program	6	9810	08-31-13
Pennsylvania	NELAP	3	68-00467	12-31-12
Rhode Island	State Program	1	LAO00307	12-30-12
South Carolina	State Program	4	96026	06-30-12
Tennessee	State Program	4	TN02907	06-30-13
Texas	NELAP	6	T104704286-12-5	09-30-13
USDA	Federal		P330-10-00407	12-10-13
Virginia	NELAP	3	460166	06-14-13
West Virginia DEP	State Program	3	136	06-30-13

Method Summary

Client: Albemarle Corporation
Project/Site: PAS NON- ROUTINE - Special Project

TestAmerica Job ID: 600-65562-1

Method	Method Description	Protocol	Laboratory
8260B	Volatile Organic Compounds (GC/MS)	SW846	TAL HOU
8270D	Semivolatile Organic Compounds (GC/MS)	SW846	TAL PEN
6010C	Metals (ICP)	SW846	TAL PEN
7470A	Mercury (CVAA)	SW846	TAL PEN

Protocol References:

SW846 = "Test Methods For Evaluating Solid Waste, Physical/Chemical Methods", Third Edition, November 1986 And Its Updates.

Laboratory References:

TAL HOU = TestAmerica Houston, 6310 Rothway Street, Houston, TX 77040, TEL (713)690-4444

TAL PEN = TestAmerica Pensacola, 3355 McLemore Drive, Pensacola, FL 32514, TEL (850)474-1001

Sample Summary

Client: Albemarle Corporation
Project/Site: PAS NON- ROUTINE - Special Project

TestAmerica Job ID: 600-65562-1

Lab Sample ID	Client Sample ID	Matrix	Collected	Received
600-65562-1	S SOLIDS DECANT	Water	12/06/12 14:45	12/12/12 12:45
600-65562-2	SP102	Water	12/06/12 14:15	12/12/12 12:45
600-65562-3	MANHOLE 11	Water	12/06/12 11:45	12/12/12 12:45
600-65562-4	SP104	Water	12/06/12 12:52	12/12/12 12:45
600-65562-5	SWB TO PC	Water	12/07/12 09:45	12/12/12 12:45
600-65562-6	SANITARY SEWER	Water	12/10/12 14:15	12/12/12 12:45
600-65562-7	T816	Water	12/11/12 13:50	12/12/12 12:45

TestAmerica Houston
6310 Rothway Street
Houston, TX 77040
Phone (713) 690-4444 Fax (713) 690-5646

Chain of Custody Record

TestAmerica

12/24/2012

Sampler:	Lab PM: Joiner, Dean A	Carrier Tracking No(s):	COC No: 600-17815-6966.1	
Phone:	E-Mail: dean.joiner@testamericainc.com		Page: Page 1 of 1	
			Job #:	

Client Information

Client Contact: Mr. Doug Thompson
Company: Albemarle Corporation
Address: PO BOX 2500
City: Pasadena
State, Zip: TX, 77501
Phone: 713-740-1861(Tel) 713-740-1781(Fax)
Email: doug.thompson@albemarle.com
Project Name: PAS NON- ROUTINE - Special Project
Site: Albemarle Corporation -Pasadena

Due Date Requested:
TAT Requested (days): 10 WD Level 2
PO #: 9501014996
WO #:
Project #: 60003633
SSOW#:

Analysis Requested

Sample Identification	Sample Date	Sample Time	Sample Type (C=comp, G=grab)	Matrix (W=water, S=solid, O=waste/oil, BT=Tissue, A=Air)	Field Filtered Sample (Yes or No)	Perform MS/MSD (Yes or No)	** 6010C/7470A - Total Metals RCRA 8	** 1311/8270D - TCLP 8270	1311/8260B - TCLP VOA	Total Number of containers	Special Instructions/Note:
			Preservation Code:				D	N	N		
S SOLIDS DECANT	12-6-12	1445	G	Water			X	X	X	5	** Sub to TA Pensacola
SP102	12-6-12	1415	G	Water			X	X	X	5	
MANHOLE 11	12-6-12	1145	G	Water			X	X	X	5	
SP104	12-6-12	1252	G	Water			X	X	X	5	
SWB TO PC	12-7-12	0945	G	Water			X	X	X	5	
SANITARY SEWER	12-10-12	1415	G	Water			X	X	X	5	
T816	12-11-12	1350	G	Water			X	X	X	5	
			G	Water			X	X	X	5	
			G	Water			X	X	X	5	
			G	Water			X	X	X	5	
			G	Water			X	X	X	5	

Preservation Codes:

A - HCL
B - NaOH
C - Zn Acetate
D - Nitric Acid
E - NaHSO4
F - MeOH
G - Amchlor
H - Ascorbic Acid
I - Ice
J - DI Water
K - EDTA
L - EDA
M - Hexane
N - None
O - AsNaO2
P - Na2O4S
Q - Na2SO3
R - Na2S2SO3
S - H2SO4
T - TSP Dodecahydrate
U - Acetone
V - MCAA
W - ph 4-5
Z - other (specify)

Other:

Possible Hazard Identification
☐ Non-Hazard ☐ Flammable ☐ Skin Irritant ☐ Poison B ☐ Unknown ☐ Radiological

Sample Disposal (A fee may be assessed if samples are retained longer than 1 month)
☐ Return To Client ☐ Disposal By Lab ☐ Archive For _____ Months

Deliverable Requested: I, II, III, IV, Other (specify)

Special Instructions/QC Requirements:

Empty Kit Relinquished by:	Date:	Time:	Method of Shipment:			
Relinquished by: [signature]	Date/Time: 12-12-12 11:32	Company: AB.	Received by: [signature]	Date/Time: 12-12-12 11:32	Company: [illegible]	
Relinquished by: [signature]	Date/Time: 12-12-12 12:45	Company: [illegible]	Received by: [signature]	Date/Time: 12/12/12 1245	Company: TA	
Relinquished by:	Date/Time:	Company:	Received by:	Date/Time:	Company:	

Custody Seals Intact: Δ Yes Δ No
Custody Seal No.:
Cooler Temperature(s) °C and Other Remarks:

Login Sample Receipt Checklist

Client: Albemarle Corporation

Job Number: 600-65562-1

Login Number: 65562
List Number: 1
Creator: Pulumbarit, Josh

List Source: TestAmerica Houston

Question	Answer	Comment
Radioactivity wasn't checked or is </= background as measured by a survey meter.	True	
The cooler's custody seal, if present, is intact.	True	
Sample custody seals, if present, are intact.	True	
The cooler or samples do not appear to have been compromised or tampered with.	True	
Samples were received on ice.	True	
Cooler Temperature is acceptable.	True	
Cooler Temperature is recorded.	True	3.9 1.6 3.6 1.6
COC is present.	True	
COC is filled out in ink and legible.	True	
COC is filled out with all pertinent information.	True	
Is the Field Sampler's name present on COC?	True	
There are no discrepancies between the containers received and the COC.	True	
Samples are received within Holding Time.	True	
Sample containers have legible labels.	True	
Containers are not broken or leaking.	True	
Sample collection date/times are provided.	True	
Appropriate sample containers are used.	True	
Sample bottles are completely filled.	True	
Sample Preservation Verified.	True	
There is sufficient vol. for all requested analyses, incl. any requested MS/MSDs	True	
Containers requiring zero headspace have no headspace or bubble is <6mm (1/4").	True	
Multiphasic samples are not present.	True	
Samples do not require splitting or compositing.	True	
Residual Chlorine Checked.	True	

Login Sample Receipt Checklist

Client: Albemarle Corporation

Job Number: 600-65562-1

Login Number: 65562
List Number: 1
Creator: Chea, Vanda L

List Source: TestAmerica Pensacola
List Creation: 12/15/12 02:17 PM

Question	Answer	Comment
Radioactivity wasn't checked or is </= background as measured by a survey meter.	N/A	
The cooler's custody seal, if present, is intact.	True	
Sample custody seals, if present, are intact.	True	
The cooler or samples do not appear to have been compromised or tampered with.	True	
Samples were received on ice.	True	
Cooler Temperature is acceptable.	True	0.5°C, IR-5
Cooler Temperature is recorded.	True	
COC is present.	True	
COC is filled out in ink and legible.	True	
COC is filled out with all pertinent information.	True	
Is the Field Sampler's name present on COC?	True	
There are no discrepancies between the containers received and the COC.	True	
Samples are received within Holding Time.	True	
Sample containers have legible labels.	True	
Containers are not broken or leaking.	True	
Sample collection date/times are provided.	True	
Appropriate sample containers are used.	True	
Sample bottles are completely filled.	True	
Sample Preservation Verified.	True	
There is sufficient vol. for all requested analyses, incl. any requested MS/MSDs	N/A	
Containers requiring zero headspace have no headspace or bubble is <6mm (1/4").	True	
Multiphasic samples are not present.	True	
Samples do not require splitting or compositing.	True	
Residual Chlorine Checked.	True	

TestAmerica

THE LEADER IN ENVIRONMENTAL TESTING

ANALYTICAL REPORT

TestAmerica Laboratories, Inc.
TestAmerica Houston
6310 Rothway Street
Houston, TX 77040
Tel: (713)690-4444

TestAmerica Job ID: 600-65658-1
Client Project/Site: PAS NON- ROUTINE - Special Project

For:
Albemarle Corporation
PO BOX 2500
Pasadena, Texas 77501

Attn: Mr. Doug Thompson

Dean A. Joiner

Authorized for release by:
12/28/2012 3:47:39 PM

Dean Joiner
Project Manager I
dean.joiner@testamericainc.com

LINKS

Review your project results through TotalAccess

Have a Question? Ask The Expert

Visit us at: www.testamericainc.com

The test results in this report meet all 2003 NELAC and 2009 TNI requirements for accredited parameters, exceptions are noted in this report. This report may not be reproduced except in full, and with written approval from the laboratory. For questions please contact the Project Manager at the e-mail address or telephone number listed on this page.

This report has been electronically signed and authorized by the signatory. Electronic signature is intended to be the legally binding equivalent of a traditionally handwritten signature.

Results relate only to the items tested and the sample(s) as received by the laboratory.

Table of Contents

Cover Page 1
Table of Contents 2
Definitions/Glossary 3
Case Narrative 4
Client Sample Results 5
Surrogate Summary 7
QC Sample Results 9
QC Association Summary 14
Lab Chronicle 16
Certification Summary 17
Method Summary 18
Sample Summary 19
Chain of Custody 20
Receipt Checklists 21

Glossary

Abbreviation	These commonly used abbreviations may or may not be present in this report.
☼	Listed under the "D" column to designate that the result is reported on a dry weight basis
%R	Percent Recovery
CNF	Contains no Free Liquid
DER	Duplicate error ratio (normalized absolute difference)
DL, RA, RE, IN	Indicates a Dilution, Reanalysis, Re-extraction, or additional Initial metals/anion analysis of the sample
DLC	Decision level concentration
EDL	Estimated Detection Limit
EPA	United States Environmental Protection Agency
MDA	Minimum detectable activity
MDC	Minimum detectable concentration
MDL	Method Detection Limit
ML	Minimum Level (Dioxin)
ND	Not detected at the reporting limit (or MDL or EDL if shown)
PQL	Practical Quantitation Limit
QC	Quality Control
RER	Relative error ratio
RL	Reporting Limit or Requested Limit (Radiochemistry)
RPD	Relative Percent Difference, a measure of the relative difference between two points
TEF	Toxicity Equivalent Factor (Dioxin)
TEQ	Toxicity Equivalent Quotient (Dioxin)

Job ID: 600-65658-1

Laboratory: TestAmerica Houston

Narrative

Job Narrative
600-65658-1

Comments
No additional comments.

Receipt
The sample was received on 12/14/2012 7:45 AM; the sample arrived in good condition, properly preserved and, where required, on ice. The temperature of the cooler at receipt was 1.2° C.

GC/MS VOA
Method(s) 8260B: The laboratory's default procedure for TCLP samples for 8260B incorporates a dilution factor of twenty prior to analysis. Further dilutions may be required due to the level of target analytes in the samples.

No other analytical or quality issues were noted.

GC/MS Semi VOA
No analytical or quality issues were noted.

Metals
Method(s) 3010A: The following sample submitted for metals analysis was received with insufficient preservation (pH >2). Lab preserved to < 2. Sp 105 @ EAST GRATIVE (600-65658-1).

No other analytical or quality issues were noted.

Organic Prep
Method(s) 3520C: Insufficient sample volume was available to meet method-mandated requirements for matrix spike/matrix spike duplicate (MS/MSD) analyses for batch 169367.

No other analytical or quality issues were noted.

Client Sample Results

Client: Albemarle Corporation
Project/Site: PAS NON- ROUTINE - Special Project

TestAmerica Job ID: 600-65658-1

Client Sample ID: Sp 105 @ EAST GRATIVE

Lab Sample ID: 600-65658-1
Matrix: Water

Date Collected: 12/12/12 13:04
Date Received: 12/14/12 07:45

Method: 8260B - Volatile Organic Compounds (GC/MS) - TCLP

Analyte	Result	Qualifier	RL	MDL	Unit	D	Prepared	Analyzed	Dil Fac
Benzene	ND		0.10		mg/L			12/19/12 14:54	20
2-Butanone (MEK)	ND		0.20		mg/L			12/19/12 14:54	20
Carbon tetrachloride	ND		0.10		mg/L			12/19/12 14:54	20
Chlorobenzene	ND		0.10		mg/L			12/19/12 14:54	20
Chloroform	ND		0.10		mg/L			12/19/12 14:54	20
1,4-Dichlorobenzene	ND		0.10		mg/L			12/19/12 14:54	20
1,2-Dichloroethane	ND		0.10		mg/L			12/19/12 14:54	20
1,1-Dichloroethene	ND		0.10		mg/L			12/19/12 14:54	20
Tetrachloroethene	ND		0.10		mg/L			12/19/12 14:54	20
Trichloroethene	ND		0.10		mg/L			12/19/12 14:54	20
Vinyl chloride	ND		0.10		mg/L			12/19/12 14:54	20

Surrogate	*%Recovery*	*Qualifier*	*Limits*	*Prepared*	*Analyzed*	*Dil Fac*
4-Bromofluorobenzene	*73*		*67 - 139*		*12/19/12 14:54*	*20*
Dibromofluoromethane	*84*		*62 - 130*		*12/19/12 14:54*	*20*
1,2-Dichloroethane-d4 (Surr)	*88*		*50 - 134*		*12/19/12 14:54*	*20*
Toluene-d8 (Surr)	*86*		*70 - 130*		*12/19/12 14:54*	*20*

Method: 8270D - Semivolatile Organic Compounds (GC/MS) - TCLP

Analyte	Result	Qualifier	RL	MDL	Unit	D	Prepared	Analyzed	Dil Fac
2-Methylphenol	ND		0.040		mg/L		12/21/12 11:52	12/26/12 12:34	1
3 & 4 Methylphenol	ND		0.080		mg/L		12/21/12 11:52	12/26/12 12:34	1
2,4-Dinitrotoluene	ND		0.040		mg/L		12/21/12 11:52	12/26/12 12:34	1
Hexachloroethane	ND		0.040		mg/L		12/21/12 11:52	12/26/12 12:34	1
Hexachlorobutadiene	ND		0.040		mg/L		12/21/12 11:52	12/26/12 12:34	1
Hexachlorobenzene	ND		0.040		mg/L		12/21/12 11:52	12/26/12 12:34	1
Nitrobenzene	ND		0.040		mg/L		12/21/12 11:52	12/26/12 12:34	1
Pentachlorophenol	ND		0.080		mg/L		12/21/12 11:52	12/26/12 12:34	1
2,4,5-Trichlorophenol	ND		0.040		mg/L		12/21/12 11:52	12/26/12 12:34	1
2,4,6-Trichlorophenol	ND		0.040		mg/L		12/21/12 11:52	12/26/12 12:34	1
Pyridine	ND		0.040		mg/L		12/21/12 11:52	12/26/12 12:34	1

Surrogate	*%Recovery*	*Qualifier*	*Limits*	*Prepared*	*Analyzed*	*Dil Fac*
2,4,6-Tribromophenol (Surr)	*108*		*15 - 135*	*12/21/12 11:52*	*12/26/12 12:34*	*1*
2-Fluorobiphenyl	*91*		*34 - 113*	*12/21/12 11:52*	*12/26/12 12:34*	*1*
2-Fluorophenol (Surr)	*68*		*10 - 104*	*12/21/12 11:52*	*12/26/12 12:34*	*1*
Nitrobenzene-d5 (Surr)	*90*		*27 - 110*	*12/21/12 11:52*	*12/26/12 12:34*	*1*
Phenol-d5 (Surr)	*83*		*10 - 110*	*12/21/12 11:52*	*12/26/12 12:34*	*1*
Terphenyl-d14 (Surr)	*91*		*53 - 125*	*12/21/12 11:52*	*12/26/12 12:34*	*1*

Method: 6010C - Metals (ICP)

Analyte	Result	Qualifier	RL	MDL	Unit	D	Prepared	Analyzed	Dil Fac
Arsenic	ND		0.0050		mg/L		12/19/12 10:57	12/21/12 13:52	1
Barium	**0.016**		0.010		mg/L		12/19/12 10:57	12/21/12 13:52	1
Cadmium	ND		0.0050		mg/L		12/19/12 10:57	12/21/12 13:52	1
Chromium	ND		0.0050		mg/L		12/19/12 10:57	12/21/12 13:52	1
Lead	ND		0.0050		mg/L		12/19/12 10:57	12/21/12 13:52	1
Selenium	ND		0.010		mg/L		12/19/12 10:57	12/21/12 13:52	1
Silver	ND		0.0050		mg/L		12/19/12 10:57	12/21/12 13:52	1

Client Sample Results

Client: Albemarle Corporation
Project/Site: PAS NON- ROUTINE - Special Project

TestAmerica Job ID: 600-65658-1

Client Sample ID: Sp 105 @ EAST GRATIVE
Date Collected: 12/12/12 13:04
Date Received: 12/14/12 07:45

Lab Sample ID: 600-65658-1
Matrix: Water

Method: 7470A - Mercury (CVAA)

Analyte	Result	Qualifier	RL	MDL	Unit	D	Prepared	Analyzed	Dil Fac
Mercury	ND		0.00020		mg/L		12/19/12 07:35	12/19/12 14:14	1

Surrogate Summary

Client: Albemarle Corporation
Project/Site: PAS NON- ROUTINE - Special Project

TestAmerica Job ID: 600-65658-1

Method: 8260B - Volatile Organic Compounds (GC/MS)

Matrix: Water — **Prep Type: Total/NA**

		Percent Surrogate Recovery (Acceptance Limits)			
		BFB	DBFM	12DCE	TOL
Lab Sample ID	Client Sample ID	(67-139)	(62-130)	(50-134)	(70-130)
LCS 600-95779/3	Lab Control Sample	86	97	98	99
MB 600-95779/5	Method Blank	71	94	99	83

Surrogate Legend

BFB = 4-Bromofluorobenzene
DBFM = Dibromofluoromethane
12DCE = 1,2-Dichloroethane-d4 (Surr)
TOL = Toluene-d8 (Surr)

Method: 8260B - Volatile Organic Compounds (GC/MS)

Matrix: Water — **Prep Type: TCLP**

		Percent Surrogate Recovery (Acceptance Limits)			
		BFB	DBFM	12DCE	TOL
Lab Sample ID	Client Sample ID	(67-139)	(62-130)	(50-134)	(70-130)
600-65658-1	Sp 105 @ EAST GRATIVE	73	84	88	86
600-65658-1 MS	Sp 105 @ EAST GRATIVE	86	99	108	100
600-65658-1 MSD	Sp 105 @ EAST GRATIVE	79	86	91	92
LB 600-95569/1-A LB	Method Blank	73	90	92	89

Surrogate Legend

BFB = 4-Bromofluorobenzene
DBFM = Dibromofluoromethane
12DCE = 1,2-Dichloroethane-d4 (Surr)
TOL = Toluene-d8 (Surr)

Method: 8270D - Semivolatile Organic Compounds (GC/MS)

Matrix: Water — **Prep Type: Total/NA**

		Percent Surrogate Recovery (Acceptance Limits)					
		TBP	FBP	2FP	NBZ	PHL	TPH
Lab Sample ID	Client Sample ID	(15-135)	(34-113)	(10-104)	(27-110)	(10-110)	(53-125)
LCS 400-169367/2-A	Lab Control Sample	94	94	67	84	69	99

Surrogate Legend

TBP = 2,4,6-Tribromophenol (Surr)
FBP = 2-Fluorobiphenyl
2FP = 2-Fluorophenol (Surr)
NBZ = Nitrobenzene-d5 (Surr)
PHL = Phenol-d5 (Surr)
TPH = Terphenyl-d14 (Surr)

Method: 8270D - Semivolatile Organic Compounds (GC/MS)

Matrix: Water — **Prep Type: TCLP**

		Percent Surrogate Recovery (Acceptance Limits)					
		TBP	FBP	2FP	NBZ	PHL	TPH
Lab Sample ID	Client Sample ID	(15-135)	(34-113)	(10-104)	(27-110)	(10-110)	(53-125)
600-65658-1	Sp 105 @ EAST GRATIVE	108	91	68	90	83	91
LB 400-169254/1-C LB	Method Blank	102	94	74	93	83	94

Surrogate Summary

Client: Albemarle Corporation
Project/Site: PAS NON- ROUTINE - Special Project

TestAmerica Job ID: 600-65658-1

Surrogate Legend

TBP = 2,4,6-Tribromophenol (Surr)
FBP = 2-Fluorobiphenyl
2FP = 2-Fluorophenol (Surr)
NBZ = Nitrobenzene-d5 (Surr)
PHL = Phenol-d5 (Surr)
TPH = Terphenyl-d14 (Surr)

Method: 8260B - Volatile Organic Compounds (GC/MS)

Lab Sample ID: MB 600-95779/5
Matrix: Water
Analysis Batch: 95779

Client Sample ID: Method Blank
Prep Type: Total/NA

Analyte	MB Result	MB Qualifier	RL	MDL	Unit	D	Prepared	Analyzed	Dil Fac
Benzene	ND		0.0050		mg/L			12/19/12 13:44	1
2-Butanone (MEK)	ND		0.010		mg/L			12/19/12 13:44	1
Carbon tetrachloride	ND		0.0050		mg/L			12/19/12 13:44	1
Chlorobenzene	ND		0.0050		mg/L			12/19/12 13:44	1
Chloroform	ND		0.0050		mg/L			12/19/12 13:44	1
1,4-Dichlorobenzene	ND		0.0050		mg/L			12/19/12 13:44	1
1,2-Dichloroethane	ND		0.0050		mg/L			12/19/12 13:44	1
1,1-Dichloroethene	ND		0.0050		mg/L			12/19/12 13:44	1
Tetrachloroethene	ND		0.0050		mg/L			12/19/12 13:44	1
Trichloroethene	ND		0.0050		mg/L			12/19/12 13:44	1
Vinyl chloride	ND		0.0050		mg/L			12/19/12 13:44	1

Surrogate	*MB %Recovery*	*MB Qualifier*	*Limits*	*Prepared*	*Analyzed*	*Dil Fac*
4-Bromofluorobenzene	*71*		*67 - 139*		*12/19/12 13:44*	*1*
Dibromofluoromethane	*94*		*62 - 130*		*12/19/12 13:44*	*1*
1,2-Dichloroethane-d4 (Surr)	*99*		*50 - 134*		*12/19/12 13:44*	*1*
Toluene-d8 (Surr)	*83*		*70 - 130*		*12/19/12 13:44*	*1*

Lab Sample ID: LCS 600-95779/3
Matrix: Water
Analysis Batch: 95779

Client Sample ID: Lab Control Sample
Prep Type: Total/NA

Analyte	Spike Added	LCS Result	LCS Qualifier	Unit	D	%Rec	%Rec. Limits
Benzene	0.0500	0.0533		mg/L		107	69 - 131
2-Butanone (MEK)	0.100	0.102		mg/L		102	59 - 133
Carbon tetrachloride	0.0500	0.0515		mg/L		103	59 - 147
Chlorobenzene	0.0500	0.0538		mg/L		108	60 - 136
Chloroform	0.0500	0.0499		mg/L		100	69 - 128
1,4-Dichlorobenzene	0.0500	0.0443		mg/L		89	72 - 131
1,2-Dichloroethane	0.0500	0.0534		mg/L		107	66 - 140
1,1-Dichloroethene	0.0500	0.0444		mg/L		89	59 - 145
Tetrachloroethene	0.0500	0.0498		mg/L		100	70 - 150
Trichloroethene	0.0500	0.0537		mg/L		107	68 - 130
Vinyl chloride	0.0500	0.0381		mg/L		76	47 - 146

Surrogate	*LCS %Recovery*	*LCS Qualifier*	*Limits*
4-Bromofluorobenzene	*86*		*67 - 139*
Dibromofluoromethane	*97*		*62 - 130*
1,2-Dichloroethane-d4 (Surr)	*98*		*50 - 134*
Toluene-d8 (Surr)	*99*		*70 - 130*

Lab Sample ID: LB 600-95569/1-A LB
Matrix: Water
Analysis Batch: 95779

Client Sample ID: Method Blank
Prep Type: TCLP

Analyte	LB Result	LB Qualifier	RL	MDL	Unit	D	Prepared	Analyzed	Dil Fac
Benzene	ND		0.10		mg/L			12/19/12 13:21	20

Method: 8260B - Volatile Organic Compounds (GC/MS) (Continued)

Lab Sample ID: LB 600-95569/1-A LB
Matrix: Water
Analysis Batch: 95779

Client Sample ID: Method Blank
Prep Type: TCLP

Analyte	LB Result	LB Qualifier	RL	MDL	Unit	D	Prepared	Analyzed	Dil Fac
2-Butanone (MEK)	ND		0.20		mg/L			12/19/12 13:21	20
Carbon tetrachloride	ND		0.10		mg/L			12/19/12 13:21	20
Chlorobenzene	ND		0.10		mg/L			12/19/12 13:21	20
Chloroform	ND		0.10		mg/L			12/19/12 13:21	20
1,4-Dichlorobenzene	ND		0.10		mg/L			12/19/12 13:21	20
1,2-Dichloroethane	ND		0.10		mg/L			12/19/12 13:21	20
1,1-Dichloroethene	ND		0.10		mg/L			12/19/12 13:21	20
Tetrachloroethene	ND		0.10		mg/L			12/19/12 13:21	20
Trichloroethene	ND		0.10		mg/L			12/19/12 13:21	20
Vinyl chloride	ND		0.10		mg/L			12/19/12 13:21	20

Surrogate	*LB %Recovery*	*LB Qualifier*	*Limits*	*Prepared*	*Analyzed*	*Dil Fac*
4-Bromofluorobenzene	*73*		*67 - 139*		*12/19/12 13:21*	*20*
Dibromofluoromethane	*90*		*62 - 130*		*12/19/12 13:21*	*20*
1,2-Dichloroethane-d4 (Surr)	*92*		*50 - 134*		*12/19/12 13:21*	*20*
Toluene-d8 (Surr)	*89*		*70 - 130*		*12/19/12 13:21*	*20*

Lab Sample ID: 600-65658-1 MS
Matrix: Water
Analysis Batch: 95779

Client Sample ID: Sp 105 @ EAST GRATIVE
Prep Type: TCLP

Analyte	Sample Result	Sample Qualifier	Spike Added	MS Result	MS Qualifier	Unit	D	%Rec	%Rec. Limits
Benzene	ND		1.00	1.11		mg/L		111	51 - 152
2-Butanone (MEK)	ND		2.00	2.06		mg/L		103	17 - 153
Carbon tetrachloride	ND		1.00	1.08		mg/L		108	49 - 176
Chlorobenzene	ND		1.00	1.15		mg/L		115	74 - 148
Chloroform	ND		1.00	1.06		mg/L		106	70 - 148
1,4-Dichlorobenzene	ND		1.00	0.945		mg/L		95	74 - 139
1,2-Dichloroethane	ND		1.00	1.13		mg/L		113	64 - 158
1,1-Dichloroethene	ND		1.00	0.976		mg/L		98	46 - 168
Tetrachloroethene	ND		1.00	2.02		mg/L		202	38 - 220
Trichloroethene	ND		1.00	1.43		mg/L		143	45 - 189
Vinyl chloride	ND		1.00	0.781		mg/L		78	59 - 138

Surrogate	*MS %Recovery*	*MS Qualifier*	*Limits*
4-Bromofluorobenzene	*86*		*67 - 139*
Dibromofluoromethane	*99*		*62 - 130*
1,2-Dichloroethane-d4 (Surr)	*108*		*50 - 134*
Toluene-d8 (Surr)	*100*		*70 - 130*

Lab Sample ID: 600-65658-1 MSD
Matrix: Water
Analysis Batch: 95779

Client Sample ID: Sp 105 @ EAST GRATIVE
Prep Type: TCLP

Analyte	Sample Result	Sample Qualifier	Spike Added	MSD Result	MSD Qualifier	Unit	D	%Rec	%Rec. Limits	RPD	RPD Limit
Benzene	ND		1.00	0.976		mg/L		98	51 - 152	13	21
2-Butanone (MEK)	ND		2.00	1.86		mg/L		93	17 - 153	10	25
Carbon tetrachloride	ND		1.00	0.987		mg/L		99	49 - 176	9	25

Method: 8260B - Volatile Organic Compounds (GC/MS) (Continued)

Lab Sample ID: 600-65658-1 MSD
Matrix: Water
Analysis Batch: 95779

Client Sample ID: Sp 105 @ EAST GRATIVE
Prep Type: TCLP

Analyte	Sample Result	Sample Qualifier	Spike Added	MSD Result	MSD Qualifier	Unit	D	%Rec	%Rec. Limits	RPD	RPD Limit
Chlorobenzene	ND		1.00	1.01		mg/L		101	74 - 148	12	21
Chloroform	ND		1.00	0.909		mg/L		91	70 - 148	15	25
1,4-Dichlorobenzene	ND		1.00	0.856		mg/L		86	74 - 139	10	25
1,2-Dichloroethane	ND		1.00	0.946		mg/L		95	64 - 158	18	25
1,1-Dichloroethene	ND		1.00	0.825		mg/L		83	46 - 168	17	22
Tetrachloroethene	ND		1.00	1.79		mg/L		179	38 - 220	12	25
Trichloroethene	ND		1.00	1.33		mg/L		133	45 - 189	7	24
Vinyl chloride	ND		1.00	0.698		mg/L		70	59 - 138	11	25

Surrogate	*MSD %Recovery*	*MSD Qualifier*	*Limits*
4-Bromofluorobenzene	*79*		*67 - 139*
Dibromofluoromethane	*86*		*62 - 130*
1,2-Dichloroethane-d4 (Surr)	*91*		*50 - 134*
Toluene-d8 (Surr)	*92*		*70 - 130*

Method: 8270D - Semivolatile Organic Compounds (GC/MS)

Lab Sample ID: LCS 400-169367/2-A
Matrix: Water
Analysis Batch: 169532

Client Sample ID: Lab Control Sample
Prep Type: Total/NA
Prep Batch: 169367

Analyte	Spike Added	LCS Result	LCS Qualifier	Unit	D	%Rec	%Rec. Limits
2-Methylphenol	0.0500	0.0360		mg/L		72	44 - 100
3 & 4 Methylphenol	0.100	0.0769		mg/L		77	38 - 110
2,4-Dinitrotoluene	0.0500	0.0488		mg/L		98	59 - 113
Hexachloroethane	0.0500	0.0355		mg/L		71	37 - 99
Hexachlorobutadiene	0.0500	0.0416		mg/L		83	40 - 110
Hexachlorobenzene	0.0500	0.0461		mg/L		92	47 - 131
Nitrobenzene	0.0500	0.0408		mg/L		82	46 - 110
Pentachlorophenol	0.0500	0.0326		mg/L		65	14 - 147
2,4,5-Trichlorophenol	0.0500	0.0407		mg/L		81	48 - 111
2,4,6-Trichlorophenol	0.0500	0.0409		mg/L		82	48 - 111
Pyridine	0.0500	0.0254		mg/L		51	10 - 109

Surrogate	*LCS %Recovery*	*LCS Qualifier*	*Limits*
2,4,6-Tribromophenol (Surr)	*94*		*15 - 135*
2-Fluorobiphenyl	*94*		*34 - 113*
2-Fluorophenol (Surr)	*67*		*10 - 104*
Nitrobenzene-d5 (Surr)	*84*		*27 - 110*
Phenol-d5 (Surr)	*69*		*10 - 110*
Terphenyl-d14 (Surr)	*99*		*53 - 125*

Method: 8270D - Semivolatile Organic Compounds (GC/MS) (Continued)

Lab Sample ID: LB 400-169254/1-C LB
Matrix: Water
Analysis Batch: 169544

Client Sample ID: Method Blank
Prep Type: TCLP
Prep Batch: 169367

Analyte	LB Result	LB Qualifier	RL	MDL	Unit	D	Prepared	Analyzed	Dil Fac
2-Methylphenol	ND		0.040		mg/L		12/21/12 11:52	12/26/12 12:00	1
3 & 4 Methylphenol	ND		0.080		mg/L		12/21/12 11:52	12/26/12 12:00	1
2,4-Dinitrotoluene	ND		0.040		mg/L		12/21/12 11:52	12/26/12 12:00	1
Hexachloroethane	ND		0.040		mg/L		12/21/12 11:52	12/26/12 12:00	1
Hexachlorobutadiene	ND		0.040		mg/L		12/21/12 11:52	12/26/12 12:00	1
Hexachlorobenzene	ND		0.040		mg/L		12/21/12 11:52	12/26/12 12:00	1
Nitrobenzene	ND		0.040		mg/L		12/21/12 11:52	12/26/12 12:00	1
Pentachlorophenol	ND		0.080		mg/L		12/21/12 11:52	12/26/12 12:00	1
2,4,5-Trichlorophenol	ND		0.040		mg/L		12/21/12 11:52	12/26/12 12:00	1
2,4,6-Trichlorophenol	ND		0.040		mg/L		12/21/12 11:52	12/26/12 12:00	1
Pyridine	ND		0.040		mg/L		12/21/12 11:52	12/26/12 12:00	1

Surrogate	*LB %Recovery*	*LB Qualifier*	*Limits*	*Prepared*	*Analyzed*	*Dil Fac*
2,4,6-Tribromophenol (Surr)	*102*		*15 - 135*	*12/21/12 11:52*	*12/26/12 12:00*	*1*
2-Fluorobiphenyl	*94*		*34 - 113*	*12/21/12 11:52*	*12/26/12 12:00*	*1*
2-Fluorophenol (Surr)	*74*		*10 - 104*	*12/21/12 11:52*	*12/26/12 12:00*	*1*
Nitrobenzene-d5 (Surr)	*93*		*27 - 110*	*12/21/12 11:52*	*12/26/12 12:00*	*1*
Phenol-d5 (Surr)	*83*		*10 - 110*	*12/21/12 11:52*	*12/26/12 12:00*	*1*
Terphenyl-d14 (Surr)	*94*		*53 - 125*	*12/21/12 11:52*	*12/26/12 12:00*	*1*

Method: 6010C - Metals (ICP)

Lab Sample ID: MB 400-169124/1-A
Matrix: Water
Analysis Batch: 169455

Client Sample ID: Method Blank
Prep Type: Total/NA
Prep Batch: 169124

Analyte	MB Result	MB Qualifier	RL	MDL	Unit	D	Prepared	Analyzed	Dil Fac
Arsenic	ND		0.0050		mg/L		12/19/12 10:57	12/21/12 12:42	1
Barium	ND		0.010		mg/L		12/19/12 10:57	12/21/12 12:42	1
Cadmium	ND		0.0050		mg/L		12/19/12 10:57	12/21/12 12:42	1
Chromium	ND		0.0050		mg/L		12/19/12 10:57	12/21/12 12:42	1
Lead	ND		0.0050		mg/L		12/19/12 10:57	12/21/12 12:42	1
Selenium	ND		0.010		mg/L		12/19/12 10:57	12/21/12 12:42	1
Silver	ND		0.0050		mg/L		12/19/12 10:57	12/21/12 12:42	1

Lab Sample ID: LCS 400-169124/2-A
Matrix: Water
Analysis Batch: 169455

Client Sample ID: Lab Control Sample
Prep Type: Total/NA
Prep Batch: 169124

Analyte	Spike Added	LCS Result	LCS Qualifier	Unit	D	%Rec	%Rec. Limits
Arsenic	1.00	1.04		mg/L		104	80 - 120
Barium	1.00	1.09		mg/L		109	80 - 120
Cadmium	0.500	0.520		mg/L		104	80 - 120
Chromium	1.00	1.08		mg/L		108	80 - 120
Lead	1.00	1.04		mg/L		104	80 - 120
Selenium	1.00	0.983		mg/L		98	80 - 120
Silver	0.500	0.515		mg/L		103	80 - 120

QC Sample Results

Client: Albemarle Corporation
Project/Site: PAS NON- ROUTINE - Special Project

TestAmerica Job ID: 600-65658-1

Method: 7470A - Mercury (CVAA)

Lab Sample ID: MB 400-169095/14-A
Matrix: Water
Analysis Batch: 169154

Client Sample ID: Method Blank
Prep Type: Total/NA
Prep Batch: 169095

Analyte	MB Result	MB Qualifier	RL	MDL	Unit	D	Prepared	Analyzed	Dil Fac
Mercury	ND		0.00020		mg/L		12/19/12 07:35	12/19/12 13:28	1

Lab Sample ID: LCS 400-169095/15-A
Matrix: Water
Analysis Batch: 169154

Client Sample ID: Lab Control Sample
Prep Type: Total/NA
Prep Batch: 169095

Analyte	Spike Added	LCS Result	LCS Qualifier	Unit	D	%Rec	%Rec. Limits
Mercury	0.00100	0.000996		mg/L		99	80 - 120

QC Association Summary

Client: Albemarle Corporation
Project/Site: PAS NON- ROUTINE - Special Project

TestAmerica Job ID: 600-65658-1

GC/MS VOA

Leach Batch: 95569

Lab Sample ID	Client Sample ID	Prep Type	Matrix	Method	Prep Batch
600-65658-1	Sp 105 @ EAST GRATIVE	TCLP	Water	1311	
600-65658-1 MS	Sp 105 @ EAST GRATIVE	TCLP	Water	1311	
600-65658-1 MSD	Sp 105 @ EAST GRATIVE	TCLP	Water	1311	
LB 600-95569/1-A LB	Method Blank	TCLP	Water	1311	

Analysis Batch: 95779

Lab Sample ID	Client Sample ID	Prep Type	Matrix	Method	Prep Batch
600-65658-1	Sp 105 @ EAST GRATIVE	TCLP	Water	8260B	95569
600-65658-1 MS	Sp 105 @ EAST GRATIVE	TCLP	Water	8260B	95569
600-65658-1 MSD	Sp 105 @ EAST GRATIVE	TCLP	Water	8260B	95569
LB 600-95569/1-A LB	Method Blank	TCLP	Water	8260B	95569
LCS 600-95779/3	Lab Control Sample	Total/NA	Water	8260B	
MB 600-95779/5	Method Blank	Total/NA	Water	8260B	

GC/MS Semi VOA

Leach Batch: 169254

Lab Sample ID	Client Sample ID	Prep Type	Matrix	Method	Prep Batch
600-65658-1	Sp 105 @ EAST GRATIVE	TCLP	Water	1311	
LB 400-169254/1-C LB	Method Blank	TCLP	Water	1311	

Prep Batch: 169367

Lab Sample ID	Client Sample ID	Prep Type	Matrix	Method	Prep Batch
600-65658-1	Sp 105 @ EAST GRATIVE	TCLP	Water	3520C	169254
LB 400-169254/1-C LB	Method Blank	TCLP	Water	3520C	169254
LCS 400-169367/2-A	Lab Control Sample	Total/NA	Water	3520C	

Analysis Batch: 169532

Lab Sample ID	Client Sample ID	Prep Type	Matrix	Method	Prep Batch
LCS 400-169367/2-A	Lab Control Sample	Total/NA	Water	8270D	169367

Analysis Batch: 169544

Lab Sample ID	Client Sample ID	Prep Type	Matrix	Method	Prep Batch
600-65658-1	Sp 105 @ EAST GRATIVE	TCLP	Water	8270D	169367
LB 400-169254/1-C LB	Method Blank	TCLP	Water	8270D	169367

Metals

Prep Batch: 169095

Lab Sample ID	Client Sample ID	Prep Type	Matrix	Method	Prep Batch
600-65658-1	Sp 105 @ EAST GRATIVE	Total/NA	Water	7470A	
LCS 400-169095/15-A	Lab Control Sample	Total/NA	Water	7470A	
MB 400-169095/14-A	Method Blank	Total/NA	Water	7470A	

Prep Batch: 169124

Lab Sample ID	Client Sample ID	Prep Type	Matrix	Method	Prep Batch
600-65658-1	Sp 105 @ EAST GRATIVE	Total/NA	Water	3010A	
LCS 400-169124/2-A	Lab Control Sample	Total/NA	Water	3010A	
MB 400-169124/1-A	Method Blank	Total/NA	Water	3010A	

QC Association Summary

Client: Albemarle Corporation
Project/Site: PAS NON- ROUTINE - Special Project

TestAmerica Job ID: 600-65658-1

Metals (Continued)

Analysis Batch: 169154

Lab Sample ID	Client Sample ID	Prep Type	Matrix	Method	Prep Batch
600-65658-1	Sp 105 @ EAST GRATIVE	Total/NA	Water	7470A	169095
LCS 400-169095/15-A	Lab Control Sample	Total/NA	Water	7470A	169095
MB 400-169095/14-A	Method Blank	Total/NA	Water	7470A	169095

Analysis Batch: 169455

Lab Sample ID	Client Sample ID	Prep Type	Matrix	Method	Prep Batch
600-65658-1	Sp 105 @ EAST GRATIVE	Total/NA	Water	6010C	169124
LCS 400-169124/2-A	Lab Control Sample	Total/NA	Water	6010C	169124
MB 400-169124/1-A	Method Blank	Total/NA	Water	6010C	169124

Lab Chronicle

Client: Albemarle Corporation
Project/Site: PAS NON- ROUTINE - Special Project

TestAmerica Job ID: 600-65658-1

Client Sample ID: Sp 105 @ EAST GRATIVE

Lab Sample ID: 600-65658-1
Matrix: Water

Date Collected: 12/12/12 13:04
Date Received: 12/14/12 07:45

Prep Type	Batch Type	Batch Method	Run	Dil Factor	Initial Amount	Final Amount	Batch Number	Prepared or Analyzed	Analyst	Lab
TCLP	Leach	1311			1.0 g	1.0 mL	95569	12/17/12 16:13	CD	TAL HOU
TCLP	Analysis	8260B		20	5 mL	5 mL	95779	12/19/12 14:54	KLV	TAL HOU
TCLP	Leach	1311			1.0 g	1.0 mL	169254	12/20/12 13:41	LW	TAL PEN
TCLP	Prep	3520C			250 mL	1.0 mL	169367	12/21/12 11:52	KH	TAL PEN
TCLP	Analysis	8270D		1			169544	12/26/12 12:34	DW	TAL PEN
Total/NA	Prep	7470A			40 mL	40 mL	169095	12/19/12 07:35	BG	TAL PEN
Total/NA	Analysis	7470A		1			169154	12/19/12 14:14	BG	TAL PEN
Total/NA	Prep	3010A			50 mL	50 mL	169124	12/19/12 10:57	KN	TAL PEN
Total/NA	Analysis	6010C		1			169455	12/21/12 13:52	GS	TAL PEN

Laboratory References:

TAL HOU = TestAmerica Houston, 6310 Rothway Street, Houston, TX 77040, TEL (713)690-4444

TAL PEN = TestAmerica Pensacola, 3355 McLemore Drive, Pensacola, FL 32514, TEL (850)474-1001

Certification Summary

Client: Albemarle Corporation
Project/Site: PAS NON- ROUTINE - Special Project

TestAmerica Job ID: 600-65658-1

Laboratory: TestAmerica Houston

All certifications held by this laboratory are listed. Not all certifications are applicable to this report.

Authority	Program	EPA Region	Certification ID	Expiration Date
Arkansas DEQ	State Program	6	88-0759	08-04-12
Louisiana	NELAP	6	01967	06-30-13
Oklahoma	State Program	6	9503	08-31-13
Texas	NELAP	6	T104704223-10-6-TX	10-31-13
USDA	Federal		P330-08-00217	04-01-14
Utah	NELAP	8	GULF	10-31-13

Laboratory: TestAmerica Pensacola

All certifications held by this laboratory are listed. Not all certifications are applicable to this report.

Authority	Program	EPA Region	Certification ID	Expiration Date
Alabama	State Program	4	40150	06-30-13
Arizona	State Program	9	AZ0710	01-11-13
Arkansas DEQ	State Program	6	88-0689	09-01-13
Florida	NELAP	4	E81010	06-30-13
Georgia	State Program	4	N/A	06-30-13
Illinois	NELAP	5	200041	10-09-13
Iowa	State Program	7	367	08-01-14
Kansas	NELAP	7	E-10253	10-31-13
Kentucky (UST)	State Program	4	53	07-05-13
Louisiana	NELAP	6	30976	06-30-13
Maryland	State Program	3	233	09-30-13
Massachusetts	State Program	1	M-FL094	06-30-13
Michigan	State Program	5	9912	06-30-13
New Hampshire	NELAP	1	2505	08-16-13
New Jersey	NELAP	2	FL006	06-30-13
North Carolina DENR	State Program	4	314	12-31-12
Oklahoma	State Program	6	9810	08-31-13
Pennsylvania	NELAP	3	68-00467	12-31-12
Rhode Island	State Program	1	LAO00307	12-30-12
South Carolina	State Program	4	96026	06-30-12
Tennessee	State Program	4	TN02907	06-30-13
Texas	NELAP	6	T104704286-12-5	09-30-13
USDA	Federal		P330-10-00407	12-10-13
Virginia	NELAP	3	460166	06-14-13
West Virginia DEP	State Program	3	136	06-30-13

Method Summary

Client: Albemarle Corporation
Project/Site: PAS NON- ROUTINE - Special Project

TestAmerica Job ID: 600-65658-1

Method	Method Description	Protocol	Laboratory
8260B	Volatile Organic Compounds (GC/MS)	SW846	TAL HOU
8270D	Semivolatile Organic Compounds (GC/MS)	SW846	TAL PEN
6010C	Metals (ICP)	SW846	TAL PEN
7470A	Mercury (CVAA)	SW846	TAL PEN

Protocol References:

SW846 = "Test Methods For Evaluating Solid Waste, Physical/Chemical Methods", Third Edition, November 1986 And Its Updates.

Laboratory References:

TAL HOU = TestAmerica Houston, 6310 Rothway Street, Houston, TX 77040, TEL (713)690-4444

TAL PEN = TestAmerica Pensacola, 3355 McLemore Drive, Pensacola, FL 32514, TEL (850)474-1001

Sample Summary

Client: Albemarle Corporation
Project/Site: PAS NON- ROUTINE - Special Project

TestAmerica Job ID: 600-65658-1

Lab Sample ID	Client Sample ID	Matrix	Collected	Received
600-65658-1	Sp 105 @ EAST GRATIVE	Water	12/12/12 13:04	12/14/12 07:45

TestAmerica Houston
6310 Rothway Street
Houston, TX 77040
Phone (713) 690-4444 Fax (713) 690-5646

Chain of Custody Record

TestAmerica

12/28/2012

Client Information	Sampler:	Lab PM: Joiner, Dean A	Carrier Tracking No(s):	COC No: 600-17815-6966.1
Client Contact: Mr. Doug Thompson	Phone:	E-Mail: dean.joiner@testamericainc.com		Page: Page 1 of 1
Company: Albemarle Corporation				Job #:
Address: PO BOX 2500	Due Date Requested:			
City: Pasadena	TAT Requested (days): 10 WD Level 2			
State, Zip: TX, 77501				
Phone: 713-740-1861(Tel) 713-740-1781(Fax)	PO #: 9501014996			
Email: doug.thompson@albemarle.com	WO #:			
Project Name: PAS NON- ROUTINE - Special Project	Project #: 60003633			
Site: Albemarle Corporation -Pasadena	SSOW#:			

Analysis Requested

Preservation Codes:

A - HCL, B - NaOH, C - Zn Acetate, D - Nitric Acid, E - NaHSO4, F - MeOH, G - Amchlor, H - Ascorbic Acid, I - Ice, J - DI Water, K - EDTA, L - EDA, M - Hexane, N - None, O - AsNaO2, P - Na2O4S, Q - Na2SO3, R - Na2S2SO3, S - H2SO4, T - TSP Dodecahydrate, U - Acetone, V - MCAA, W - ph 4-5, Z - other (specify)

Other:

Sample Identification	Sample Date	Sample Time	Sample Type (C=comp, G=grab)	Matrix (W=water, S=solid, O=waste/oil, BT=Tissue, A=Air)	Field Filtered Sample (Yes or No)	Perform MS/MSD (Yes or No)	** 6010C/7470A - Total Metals RCRA 8	** 1311/8270D - TCLP 8270	1311/8260B - TCLP VOA	Total Number of containers	Special Instructions/Note:
			Preservation Code:				D	N	N		
SP 105 @ EAST GRAPHIC	12-12-12	1304	G	Water			X	X	X	5	** Sub to TA Pensacola
			G	Water			X	X	X	5	
			G	Water			X	X	X	5	
			G	Water			X	X	X	5	
			G	Water			X	X	X	5	
			G	Water			X	X	X	5	
			G	Water			X	X	X	5	
			G	Water			X	X	X	5	
			G	Water			X	X	X	5	
			G	Water			X	X	X	5	
			G	Water			X	X	X	5	

Possible Hazard Identification
☐ Non-Hazard ☐ Flammable ☐ Skin Irritant ☐ Poison B ☐ Unknown ☐ Radiological

Sample Disposal (A fee may be assessed if samples are retained longer than 1 month)
☐ Return To Client ☐ Disposal By Lab ☐ Archive For _____ Months

Deliverable Requested: I, II, III, IV, Other (specify)

Special Instructions/QC Requirements:

Empty Kit Relinquished by:	Date:	Time:		Method of Shipment:		
Relinquished by:	Date/Time: 12-14-0745	Company	Received by:	Date/Time: 12/14/12 745	Company TAH	
Relinquished by:	Date/Time: 12/14/12 1155	Company TAH	Received by:	Date/Time: 12/14/12 1155	Company TAH	
Relinquished by:	Date/Time:	Company	Received by:	Date/Time:	Company	

Custody Seals Intact: Δ Yes Δ No

Custody Seal No.:

Cooler Temperature(s) °C and Other Remarks:

Login Sample Receipt Checklist

Client: Albemarle Corporation

Job Number: 600-65658-1

Login Number: 65658
List Number: 1
Creator: Capps, Dana

List Source: TestAmerica Houston

Question	Answer	Comment
Radioactivity wasn't checked or is </= background as measured by a survey meter.	True	
The cooler's custody seal, if present, is intact.	True	
Sample custody seals, if present, are intact.	True	
The cooler or samples do not appear to have been compromised or tampered with.	True	
Samples were received on ice.	True	
Cooler Temperature is acceptable.	True	
Cooler Temperature is recorded.	True	1.2
COC is present.	True	
COC is filled out in ink and legible.	True	
COC is filled out with all pertinent information.	True	
Is the Field Sampler's name present on COC?	True	
There are no discrepancies between the containers received and the COC.	True	
Samples are received within Holding Time.	True	
Sample containers have legible labels.	True	
Containers are not broken or leaking.	True	
Sample collection date/times are provided.	True	
Appropriate sample containers are used.	True	
Sample bottles are completely filled.	True	
Sample Preservation Verified.	True	
There is sufficient vol. for all requested analyses, incl. any requested MS/MSDs	True	
Containers requiring zero headspace have no headspace or bubble is <6mm (1/4").	True	
Multiphasic samples are not present.	True	
Samples do not require splitting or compositing.	True	
Residual Chlorine Checked.	True	

Login Sample Receipt Checklist

Client: Albemarle Corporation

Job Number: 600-65658-1

Login Number: 65658
List Number: 1
Creator: Crawford, Lauren E

List Source: TestAmerica Pensacola
List Creation: 12/18/12 10:12 AM

Question	Answer	Comment
Radioactivity wasn't checked or is </= background as measured by a survey meter.	N/A	
The cooler's custody seal, if present, is intact.	True	
Sample custody seals, if present, are intact.	N/A	
The cooler or samples do not appear to have been compromised or tampered with.	True	
Samples were received on ice.	True	
Cooler Temperature is acceptable.	True	
Cooler Temperature is recorded.	True	1.3°C IR-5
COC is present.	True	
COC is filled out in ink and legible.	True	
COC is filled out with all pertinent information.	True	
Is the Field Sampler's name present on COC?	True	
There are no discrepancies between the containers received and the COC.	True	
Samples are received within Holding Time.	True	
Sample containers have legible labels.	True	
Containers are not broken or leaking.	True	
Sample collection date/times are provided.	True	
Appropriate sample containers are used.	True	
Sample bottles are completely filled.	True	
Sample Preservation Verified.	True	
There is sufficient vol. for all requested analyses, incl. any requested MS/MSDs	True	
Containers requiring zero headspace have no headspace or bubble is <6mm (1/4").	N/A	
Multiphasic samples are not present.	True	
Samples do not require splitting or compositing.	True	
Residual Chlorine Checked.	N/A	

ALBEMARLE LAB REPORT

Code Name	MH dwnstream 105	T1816	Sanitary Sewer	Storm Water Pond
Sample Date	12/12/2012	12/11/2012	12/10/2012	12/7/2012
Sample Time	13:04	13:50	14:15	09:45
Sample Id	1236266	1236230	1236088	1236241
pH	**10.79**	**7.44**	**6.26**	**7.71**

Code Name	SAND BED	SP 102 CHA/DF1	SP 104 HB2	Manhole 11/Trunkline
Sample Date	12/6/2012	12/6/2012	12/6/2012	12/6/2012
Sample Time	14:45	14:15	12:52	11:46
Sample Id	1236231	1235332	1235325	1235311
pH	**4.28**	**8.61**	**7.1**	**7**

Albemarle Corporation - Analytical Services Procedures

Approved by Daniel Warthen on 03/18/2010

Section: Water Lab Procedures

Name:	Number:	Issue Date:	Reissue Date:
Non-Routine water samples (MEMC, etc).	WS0-03	03/18/2010	03/18/2010

EPA CAFO Sx's

date 12/6/12 Analyst(s) LR/DP

	Sample name	date/time	pH	TOC	GCD	HPLC	GC#1
		Sx Time	Time In		PH Taken		Result
1	M.H. 11	1146	1149		1150		7.0
6	Sp 104	1252	1257		1259		7.1
5	Sp 102	1415	1420		1421		8.6
3	Sa Solids Decant	14:45	1450		1452		4.28

LHH 14:52 12/06/12 1
LHH 14:52 12/06/12

David

Albemarle Corporation - Analytical Services Procedures

Approved by Daniel Warthen on 03/18/2010

Section: **Water Lab Procedures**

Name:	Number:	Issue Date:	Reissue Date:
Non-Routine water samples (MEMC, etc)	WS0-03	03/18/2010	03/18/2010

date 12/12/12 Analyst(s)

Sample name	date/time	pH	TOC	GCD	~~HPLC~~ ARRIVAL TIME	~~GCMS~~ PHONE TIME
SP105e	12/12/1304	10.79			1310	1311
EAST GRATING						

2

12/12 11:35 AM L7

Albemarle Corporation - Analytical Services Procedures

Approved by Daniel Warthen on 03/18/2010

Section: Water Lab Procedures

Name:	Number:	Issue Date:	Reissue Date:
Non-Routine water samples (MEMC, etc)	WS0-03	03/18/2010	03/18/2010

date 12/7/12 thru 12/9/12 Analyst(s) DP / MM

Sample name	date/time	pH	TOC	GCD	HPLC	GC#1
	Sample Time		Time at Lab	Time pH taken		
7:8 SWB to PC	12/7/12-0945	7.71	0952	0954		
E 23599	12/9-1000		277			
SA						
U 67351	12/9-1015		415			
SA						
P 92487	12/9-1130		352			
SA						
T 451	12/9-1345		231			
SA						
MEMC 21	12/9-1730	9.21				✓
46	"	7.35				✓

L144 09:56 12/12

Albemarle Corporation - Analytical Services Procedures

Approved by Daniel Warthen on 03/18/2010

Section: Water Lab Procedures

Name:	Number:	Issue Date:	Reissue Date:
Non-Routine water samples (MEMC, etc)	WS0-03	03/18/2010	03/18/2010

SPECIAL WASTEWATER SAMPLES

date 12/10/12 — Analyst(s) DP/

Sample name	date/time	pH	TOC	GCD	HPLC	GC#1
			TIME	TIME		
	SAMPLE TIME	pH	AT LAB	pH TAKEN		
④ Sanitary Sewer	12/10 - 1415	6.26	14:20	14:21		14:21 12/10/12
⑨ T1816	12/11 - 1350	7.44	13:58	13:59		13:58 12/11/12

Albemarle Corporation - Analytical Services Procedures

Approved by Chet StRomain on 03/22/2010

Section: **Instrument Procedures; PAO/AN Procedures; Water Lab Procedures; Specialties Lab Procedures; Alkyl Lab Procedures**

Name:	Number:	Issue Date:	Reissue Date:
pH meter daily calibration	IP0-01	08/31/2009	03/22/2010

Lab Room 144

Month December

Year 2012

TOLERANCE CHART

Print out "pages 1 to 2"

NOTE: record additional instrument calibrations on page 2.

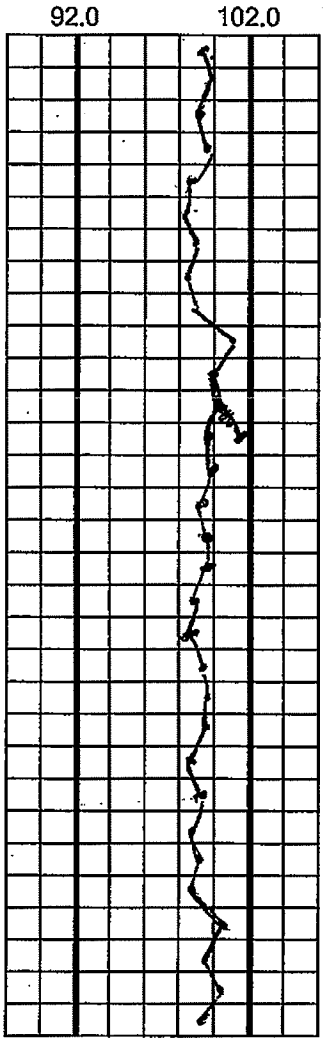

date	time	temp	pH4	pH7	pH10	slope	analyst
1	00:05	20.4	4.01	7.02	10.04	99.6	EHJ
2	07:34	19.7	4.03	7.01	10.07	99.9	BC
3	0910	20.3	4.01	6.98	10.05	99.2	EHJ
4	0000	20.3	4.01	7.01	10.06	99.8	[illegible]
5	00:10	19.7	4.00	7.04	10.04	98.5	EHJ
6	0915	20.1	4.01	7.00	10.02	98.7	[illegible]
7	02:10	19.6	4.00	7.02	10.07	98.8	BC
8	0005	20.1	3.99	6.95	10.04	98.3	R
9	2330	20.0	4.01	7.01	10.06	98.7	[illegible]
10	0111	20.0	4.00	6.94	10.01	101.6	R
11	0100	19.3	3.99	6.94	10.05	100.0	R
12	23:28	19.8	4.00	7.01	10.04	100.3	EHJ
13	23:20	19.4	4.00	7.02	10.05	99.8	EHJ
14	0015	20.1	4.00	7.02	10.01	100.0	[illegible]
15	00:00	20.5	4.01	7.03	10.00	99.6	[illegible]
16	0005	21.6	4.00	7.01	10.00	99.7	DK
17	0010	20.8	4.01	7.00	10.01	99.8	DK
18	6030	20.4	3.98	7.01	10.00	99.7	DK
19	0030	20.6	4.00	6.99	10.00	99.6	DK
20	0030	21.0	4.01	7.01	10.00	99.5	DK
21	0030	19.3	4.00	7.00	10.01	99.7	DK
22	2355	19.7	4.01	7.02	10.07	98.5	[illegible]
23	2330	20.0	4.06	7.01	10.06	98.3	[illegible]
24	0800	22.1	4.01	7.01	9.99	99.4	EHJ
25	0020	20.1	4.01	7.01	10.06	99.1	[illegible]
26	0120	20.6	4.01	7.01	10.06	99.5	RH
27	01:10	19.9	4.00	7.02	10.07	98.8	[illegible]
28	00:50	22.6	4.01	7.01	10.04	100.6	[illegible]
29	2358	20.0	3.91	6.99	10.06	99.1	BMC
30	00:05	20.0	4.00	7.01	10.06	100.4	[illegible]
31	23:25	20.8	4.04	7.04	10.03	99.6	EHJ

Attachment 3

Sample Locations