Scan A1/A1/Co 110000460885 V.23 TX

FEB 01 2012

RECEIVE
FEB 1 2012
Air/Toxics & Inspection
Coordination Branch
SE.1-A

VALERO

January 30, 2012

Ms. Linda Vasse
Regional Director
TCEQ
5425 Polk St., Suite H
Houston, Texas 77023-1423

Re: NSPS Subpart GGG, Refinery MACT CC, 30 TAC HRVOC and Consent Decree (Civil Action SA-05-CA-0569)
Fugitive Emissions Monitoring Report for Reporting Period 7/1/11 through 12/31/11
Valero Refining-Texas, L.P. (Valero)
Houston Refinery, Harris County
TCEQ Account No. HG-0130-C
TCEQ Customer No. CN600127468
TCEQ Regulated Entity No. RN100219310

Dear Ms. Vasse:

As part of the reports required under 40 CFR 60.487 for NSPS Subpart GGG, 40 CFR 63.654 for Refinery MACT CC, 30 TAC 115.786(c) for HRVOC, and Consent Decree (Civil Action SA-05-CA-0569), Part XI, Valero submits the following information:

Attachment I – LDAR requirements under each Semi-Annual Report in accordance with Paragraph 215(a) of the Consent Decree,

Attachment II – LDAR requirements under each Semi-Annual Report in accordance with Paragraph 215(b) of the Consent Decree,

Attachment III – Additional monitoring information in accordance with Paragraph 215(b)(iii)(a) through (j) of the Consent Decree,

Attachment IV – Semi-Annual LDAR monitoring information reported under 40 CFR 60.487,

Attachment V– Semi-Annual LDAR monitoring information reported under 40 CFR 63.654, and

Attachment VI – Records of non-repairable components reported under 30 TAC 115.786(c).

Please note that in accordance with Paragraph 215(b)(ii) of the Consent Decree, 12 personnel completed LDAR training in accordance with either Paragraph 186(1) or (2) of the Consent Decree during the reporting period of 7/1/11 through 12/31/11.

In accordance with the provisions in 30 TAC §122.165(a)(7), a Certification by Responsible Official (OP-CRO1) Form signed by the Responsible Official certifying the information contained in this report is enclosed.

If you have any questions or concerns please contact me at 713-924-1524.

Sincerely,

Christopher Abshire
Manager, Environmental Engineering

Attachments

cc: CERTIFIED MAIL 7007 1490 0002 5609 2314 (Vasse)

U.S. EPA (one copy) CERTIFIED MAIL 7007 1490 0002 5609 2321

Chief (two copies) Air, Toxics, and Inspection Coordination Branch (6EN-A)
Compliance Assurance and Enforcement Division
U.S. Environmental Protection Agency, Region 6
1445 Ross Avenue Dallas, Texas 75202
CERTIFIED MAIL 7007 1490 0002 5609 2338

John Steib (two copies)
Deputy Director
Office of Compliance & Enforcement Texas Commission on Environmental Quality
P.O. Box 13087, MC 172
Austin, Texas 78711-3087
CERTIFIED MAIL 7007 1490 0002 5609 2345

Mr. Michael Shaffer, Director, HCPCD, Pasadena, Texas
CERTIFIED MAIL 7007 1490 0002 5609 2352

Office of the Attorney General of the State of Texas (two copies)
Natural Resource Division Attn: Karen Kornell
300 West 15th Street, 10th Floor Austin, Texas 78701
CERTIFIED MAIL 7007 1490 0002 5609 2369

With .pdf copy of file to:

csullivan@matrixneworld.com; and
braby.sharon@epa.gov

If unable to send electronic file, please mail to:

Director, Air Enforcement Division
c/o Matrix New World Engineering, Inc.
120 Eagle Rock Ave., Suite 207
East Hanover, NJ 07936-3159

Form OP-CRO1
Certification by Responsible Official
Federal Operating Permit Program

All initial permit application, revision, renewal, and reopening submittals requiring certification must be addressed using this form. Updates to site operating permit (SOP) and temporary operating permit (TOP) applications, other than public notice verification materials, must be certified prior to authorization of public notice or start of public announcement. Updates to general operating permit (GOP) applications must be certified prior to receiving an authorization to operate under a GOP.

I. IDENTIFYING INFORMATION

A. RN: 100219310	B. CN: 600127468	C. Account No.: HG-0130-C
D. Permit No.: O1381	E. Project No.:	
F. Area Name: Houston Refinery		
G. Company Name: Valero Refining – Texas, L.P.		

II. CERTIFICATION TYPE *(Please mark the appropriate box)*

A. ☒ Responsible Official: B. ☐ Duly Authorized Representative:

III. SUBMITTAL TYPE *(Place an "X" in the appropriate box) (Only one response can be accepted per form)*

☐ SOP/TOP Initial Permit Application	☐ Update to Permit Application
☐ GOP Initial Permit Application	☐ Permit Revision, Renewal, or Reopening

☒ Other: LDAR NSPS GGG, MACT CC, Consent Decree Semi-annual Reports

IV. CERTIFICATION OF TRUTH

This certification does not extend to information which is designated by the TCEQ as information for reference only.

I, Robert E. Moore *(Certifier Name printed or typed)*, certify that I am the RO *(RO or DAR)* for this application and that, based on information and belief formed after reasonable inquiry, the statements and information dated during the time period in Section IV.A below, or on the specific date(s) in Section IV.B below, are true, accurate, and complete:

Note: Enter EITHER a Time Period OR Specific Date(s) for each certification. This section must be completed. The certification is not valid without documentation date(s).

A. Time Period: From _____ *Start Date** to _____ *End Date**

OR

B. Specific Dates: 01/30/12 _____ _____ _____ _____ _____ _____ _____

*Date 1** *Date 2** *Date 3** *Date 4** *Date 5** *Date 6** *Date 7** *Date 8**

**The Time Period option may only be used when the "Submittal Type" is 'Update to Permit Application' and there are multiple uncertified submittals; or a submittal package has multiple dates recorded in the documentation. Do not use the Time Period option if the "Submittal Type" is 'Other.'*

Signature: [signature] Signature Date: 1/30/12

Title: Vice President & General Manager

ATTACHMENT I

SEMI-ANNUAL REPORT ELEMENTS

215(a) **First Semi-Annual Report Due under the Consent Decree:**

(i.) A certification of the implementation of the "initial attempt at repair" program under Paragraph 199;

The implementation of a program for Initial Attempt at Repair on Valves, as outlined in Section I, Paragraph 199 of the Consent Decree was required on February 21, 2006. A signed certification statement, submitted on April 24, 2006, attesting to this implementation was included in the first transmittal letter for this report.

(ii.) A certification of the implementation of QA/QC procedures for review of data generated by LDAR technicians as required by Paragraph 207;

The implementation of a program to QA/QC of LDAR Data, as outlined in Section L, Paragraph 207 of the Consent Decree was required on February 21, 2006. A signed certification statement, submitted on April 24, 2006, attesting to this implementation was included in the first transmittal letter for this report.

(iii.) An identification of the individual, by name or title, at each Refinery responsible for LDAR management as required by Paragraph 288;

This information on the identification of the title/position and associated LDAR related job duties responsible for LDAR management was provided in the semiannual report submitted in January 2006.

(iv.) A certification of the development of a tracking program for new valves and pumps added during maintenance and construction (Management of Change Program) as required by Paragraph 209;

The development of a Management of Change Program for Adding New Valves and Pumps, as outlined in Section N, Paragraph 209 of the Consent Decree was required on November 23, 2006. A signed certification statement, submitted on April 30, 2007, attesting to this implementation was included in the third transmittal letter for this report.

(v.) A certification of the implementation of the calibration and calibration drift assessment procedures of Paragraphs 210 and 211;

The development of Calibration and Calibration Drift Assessment procedures, as outlined in Section O, Paragraphs 210-211 of the Consent Decree, was required on January 22,2006. A signed certification statement, submitted on April 24, 2006, attesting to this implementation was included in the first transmittal letter for this report.

(vi.) A certification of the implementation of the "chronic leaker" and "delay of repair" procedures of Paragraphs 212 and 213;

The certification of the implementation of the chronic leaker program was provided in the semiannual report submitted in January 2006.

The implementation of a Delay of Repair procedure, as outlined in Section B, Paragraph 185 of the Consent Decree, was required on January 22, 2006. A signed certification statement attesting to this implementation was included in the first transmittal letter for this report.

(vii.) A copy of each refinery's written refinery-wide LDAR program under Paragraph 185.

The development of the written, refinery-wide LDAR Program, as outlined in Section O, Paragraph 185 of the Consent Decree, was required to be implemented on March 31, 2006. A copy of the written program was submitted in April 2006.

ATTACHMENT II

SEMI-ANNUAL REPORT ELEMENTS

215(b) **Until termination of this Part XI of the Consent Decree:**

(i.) An identification of each audit, if any, that was conducted pursuant to the requirements of Section XI.D. in the previous semiannual period at each of Valero's Refineries and Tesoro shall include an identification of each audit, if any, that was conducted pursuant to the requirements of Section XI.D in the previous semiannual period at Tesoro's Golden Eagle Refinery. For each audit identified, the report shall include an identification of the auditors, a summary of the audit results, and a summary of the actions that Valero or Tesoro, as applicable, took or intends to take to correct all deficiencies identified in the audits.

There were no scheduled audits conducted during the 2nd Semiannual Period of 2011 as it relates to the Consent Decree, however an independent third-party audit as required by 30 TAC 115-HRVOC was conducted during the 4th Quarter of 2011 with no deficiencies noted.

(ii.) Training. Information identifying the measures taken to comply with the provisions of Paragraph 186;

The implementation of an LDAR Training program, as outlined in Section C, Paragraph 186 of the Consent Decree was required by March 31,2006. A training program for LDAR personnel was developed and implemented for LDAR personnel by March 31, 2006. Newly assigned LDAR personnel complete the training program prior to beginning any LDAR work. During the 2nd Semiannual Period of 2011, 0 LDAR personnel was trained pursuant to Paragraph 186. A training program for operations and maintenance personnel (including contract personnel) was developed and commenced by March 31, 2006. This initial training for operations and maintenance personnel was completed by September 30, 2006 and the refresher training required every three years was conducted throughout 2009 and completed by December 31, 2009.

(iii.) Monitoring. The following information on LDAR monitoring:

(a) a list of the process units monitored during the reporting period;

(b) the number of valves and pumps present in each monitored process unit;

(c) the number of valves and pumps monitored in each process unit;

(d) the number of valves and pumps found leaking;

(e) the number of "difficult to monitor" pieces of equipment monitored;

(f) the projected month of the next monitoring event for that unit;

(g) a list of all pumps and valves currently on the"delay of repair" list, the date each component was placed on the list, the date each such component was determined to be leaking at a rate greater than 10,000 ppm, the date each drill and tap or equivalent method of repair, its associated monitoring results and whether such activities were completed in a timely manner under Paragraph 213;

(h) a list of all initial attempts/remonitoring that did not occur in a timely manner under Paragraph 199;

(i) the number of missed or untimely repairs under Paragraph 198; and

(j) the number of missed or untimely repairs under Paragraphs 212 and 213.

The required LDAR monitoring information in items (a) through (j) is provided in Attachment III. Please note that there were no initial attempts not occurring in a timely manner, or missed or untimely repairs during this reporting period.

ATTACHMENT III

ADDITIONAL MONITORING INFORMATION

PARAGRAPH 215(B)(III)(A) THROUGH (J)

Process Unit Number/Name	Component Type	Accessibility	Number Present In Each Unit @ Start of Monitoring Period (7/1/11)	Number Monitored During Period	Number of Leaks Found	Month of Next Monitoring Event
21-ISOOCTENE	PUMP	N	10	5	0	January 2012
	VALVE	D	3	0	0	January 2012
	VALVE	N	796	46	0	January 2012
22A-BHT	PUMP	N	2	12	0	January 2012
	VALVE	D	2	2	0	January 2012
	VALVE	N	310	619	21	January 2012
22-ALKYLATION	PUMP	N	54	266	18	January 2012
	VALVE	D	95	57	0	January 2012
	VALVE	N	3127	6356	107	January 2012
22B-XYLENE	PUMP	N	4	24	0	January 2012
	VALVE	N	91	182	0	January 2012
23-COMBO	PUMP	N	55	241	4	January 2012
	VALVE	D	176	190	0	January 2012
	VALVE	N	3792	7529	41	January 2012
27A-C UNIFINER	PUMP	N	2	12	0	January 2012
	VALVE	D	0	0	0	January 2012
	VALVE	N	226	452	0	January 2012
27-PLATFORMER	PUMP	N	5	12	1	January 2012
	VALVE	D	0	0	0	January 2012
	VALVE	N	579	1072	6	January 2012
28-A UNIFINER	PUMP	N	7	36	1	January 2012
	VALVE	D	8	0	0	January 2012
	VALVE	N	743	1476	0	January 2012
29-B UNIFINER	PUMP	N	2	0	0	January 2012
	VALVE	D	20	4	0	January 2012
	VALVE	N	1169	2339	2	January 2012
30-Flare System	PUMP	N	12	52	0	January 2012
	VALVE	D	22	0	0	January 2012
	VALVE	N	975	1945	3	January 2012
39-SRU 2	PUMP	N	12	46	0	January 2012
	VALVE	D	10	0	0	January 2012
	VALVE	N	844	1688	0	January 2012
40-ULSD FRACTIONATION	PUMP	N	34	60	0	January 2012
	VALVE	D	18	35	0	January 2012
	VALVE	N	1549	3116	0	January 2012
40-ULSD SAT GAS	PUMP	N	23	22	0	January 2012
	VALVE	D	38	47	0	January 2012
	VALVE	N	2267	4598	20	January 2012
40-ULSD UNICRACKER	PUMP	N	27	71	1	January 2012
	VALVE	D	62	142	0	January 2012
	VALVE	N	2562	5278	3	January 2012
41-D UNIFINER	PUMP	N	18	32	1	January 2012
	VALVE	D	64	77	0	January 2012
	VALVE	N	2403	4805	16	January 2012

Process Unit Number/Name	Component Type	Accessibility	Number Present In Each Unit @ Start of Monitoring Period (7/1/11)	Number Monitored During Period	Number of Leaks Found	Month of Next Monitoring Event
42A-FCCU CATALYST	PUMP	N	5	10	0	January 2012
	VALVE	D	2	4	0	January 2012
	VALVE	N	453	919	1	January 2012
42B-FCCU GAS CON	PUMP	N	25	98	4	January 2012
	VALVE	D	9	0	0	January 2012
	VALVE	N	1701	3394	8	January 2012
42C-FCCU DEPENTANIZER	PUMP	N	9	37	0	January 2012
	VALVE	D	35	35	0	January 2012
	VALVE	N	879	1763	2	January 2012
42-FCCU CAT GAS	PUMP	N	28	66	0	January 2012
	VALVE	D	10	11	0	January 2012
	VALVE	N	1144	2270	5	January 2012
43A-FCCU MEROX	PUMP	N	2	12	0	January 2012
	VALVE	D	0	0	0	January 2012
	VALVE	N	446	891	9	January 2012
43-FCCU PROPYLENE	PUMP	N	9	53	4	January 2012
	VALVE	D	0	0	0	January 2012
	VALVE	N	822	1646	29	January 2012
44A-SAT GAS	PUMP	N	11	54	1	January 2012
	VALVE	D	0	0	0	January 2012
	VALVE	N	516	1032	0	January 2012
44-ROSE	PUMP	N	25	104	3	January 2012
	VALVE	D	53	62	0	January 2012
	VALVE	N	2219	4505	20	January 2012
45A-SOUR H20 STRIPPER	PUMP	N	11	66	0	January 2012
	VALVE	D	2	2	0	January 2012
	VALVE	N	396	792	0	January 2012
45-MEA	PUMP	N	25	88	0	January 2012
	VALVE	D	0	0	0	January 2012
	VALVE	N	1713	4223	1	January 2012
46-SRU	PUMP	N	16	49	0	January 2012
	VALVE	D	2	2	0	January 2012
	VALVE	N	836	1672	0	January 2012
47-H20 TREATERS	PUMP	N	10	60	1	January 2012
	VALVE	D	0	0	0	January 2012
	VALVE	N	109	218	0	January 2012
50-COGEN BOILERS	VALVE	D	1	0	0	January 2012
	VALVE	N	257	515	6	January 2012
81-Boilerhouse	PUMP	N	9	46	0	January 2012
	VALVE	D	6	0	0	January 2012
	VALVE	N	357	715	1	January 2012
90-A TANK FARM	PUMP	N	60	238	8	January 2012
	VALVE	D	49	0	0	January 2012
	VALVE	N	3764	7531	85	January 2012
90A-CRUDE TANK FARM	PUMP	N	7	42	0	January 2012
	VALVE	D	17	2	0	January 2012
	VALVE	N	716	1427	0	January 2012

Process Unit Number/Name	Component Type	Accessibility	Number Present In Each Unit @ Start of Monitoring Period (7/1/11)	Number Monitored During Period	Number of Leaks Found	Month of Next Monitoring Event
90B-16 ACRE TANK FARM	PUMP	N	13	40	0	January 2012
	VALVE	D	10	6	0	January 2012
	VALVE	N	411	723	2	January 2012
90C-REFRIGE STORAGE TANK FARM	PUMP	N	8	48	5	January 2012
	VALVE	D	2	0	0	January 2012
	VALVE	N	654	1312	22	January 2012
91-300 TANK FARM	PUMP	N	0	0	0	January 2012
	VALVE	D	0	0	0	January 2012
	VALVE	N	0	0	0	January 2012
91B-900 TANK FARM	PUMP	N	16	68	0	January 2012
	VALVE	D	11	14	0	January 2012
	VALVE	N	1109	2220	9	January 2012
96-RECOVERY WELL SYSTEM	PUMP	N	2	12	0	January 2012
	VALVE	D	2	0	0	January 2012
	VALVE	N	279	834	0	January 2012
Pipe Rack	VALVE	D	481	465	0	January 2012
	VALVE	N	615	1228	4	January 2012

CURRENT "DELAY OF REPAIR" LIST - PUMPS & VALVES

Unit	Component ID Code	Component Type	Date placed on Delay of Repair List	Date Leak was found to be greater than 10,000 ppm	Date Drill and Tap Repair was conducted and associated monitoring results
22-Alkylation	22-1369	Control Valve	1/18/2011	1/11/2011	N/A*
22-Alkylation	22-1916	Pump	8/26/2011	8/11/2011	N/A*
22-Alkylation	22-1918	Pump	8/26/2011	Never over 10,000 ppm	N/A*
50-Boilers	50-097	Valve	8/11/2011	Never over 10,000 ppm	N/A*

*-Not Applicable, not required for control valves, pumps, or valves where the leak was not greater than 10,000 ppm.

ATTACHMENT IV

NSPS SUBPART GGG

SEMI-ANNUAL MONITORING REPORT

VALERO REFINING– TEXAS, L.P.; HOUSTON REFINERY

NSPS GGG SEMI-ANNUAL REPORT [§60.487(c)]

Unit Identification: Alkylation Unit	**Report Date: 1/23/2012**
Account #: HG-0130-C	**Person Completing Report: Matt Lindquist**

	JUL	AUG	SEP	OCT	NOV	DEC
VALVES						
NUMBER FOUND LEAKING						
§60.482-7(b) or §60.483-2	12	0	0	9	0	1
DELAY OF REPAIR						
Not Repaired per §60.482-7(d)(1)	0	0	0	0	0	0
NUMBER OF COMPONENTS						
Additions/Deletions	+2/-43					
PUMPS						
NUMBER FOUND LEAKING						
§60.482-2(b) and (d)(6)(i)	3	1	2	2	1	2
DELAY OF REPAIR						
Not Repaired per 60.482-2(c)(1) and (d)(6)(ii)	0	1	0	0	0	0
Additions/Deletions	+1/-0					
COMPRESSORS						
NUMBER FOUND LEAKING						
§60.482-3(f)	0	0	0	0	0	0
DELAY OF REPAIR						
Not Repaired per §60.482-3(g)(1)	0	0	0	0	0	0
NUMBER OF COMPONENTS						
Additions/Deletions	+0/-0					

DATES OF SHUTDOWNS OCCURRING DURING THIS PERIOD:

None

DELAY OF REPAIR DOCUMENTATION:

Repair of pump is technically infeasible without a unit shutdown.

VALERO REFINING– TEXAS, L.P.; HOUSTON REFINERY

NSPS GGG SEMI-ANNUAL REPORT [§60.487(c)]

Unit Identification: Amine Unit | **Report Date: 1/23/2012**

Account #: HG-0130-C | **Person Completing Report: Matt Lindquist**

	JUL	AUG	SEP	OCT	NOV	DEC
VALVES						
NUMBER FOUND LEAKING						
§60.482-7(b) or §60.483-2	0	0	1	0	0	0
DELAY OF REPAIR						
Not Repaired per §60.482-7(d)(1)	0	0	0	0	0	0
NUMBER OF COMPONENTS						
Additions/Deletions	+0/-0					
PUMPS						
NUMBER FOUND LEAKING						
§60.482-2(b) and (d)(6)(i)	0	0	0	0	0	0
DELAY OF REPAIR						
Not Repaired per 60.482-2(c)(1) and (d)(6)(ii)	0	0	0	0	0	0
Additions/Deletions	+0/-0					
COMPRESSORS						
There are no compressors subject to the requirements of §60.482-3						

DATES OF SHUTDOWNS OCCURRING DURING THIS PERIOD:

None

DELAY OF REPAIR DOCUMENTATION:

N/A

VALERO REFINING– TEXAS, L.P.; HOUSTON REFINERY

NSPS GGG SEMI-ANNUAL REPORT [§60.487(c)]

Unit Identification: FLARE UNIT	**Report Date: 1/23/2012**
Account #: HG-0130-C	**Person Completing Report: Matt Lindquist**

	JUL	AUG	SEP	OCT	NOV	DEC
VALVES						
NUMBER FOUND LEAKING						
§60.482-7(b) or §60.483-2	0	0	0	1	0	0
DELAY OF REPAIR						
Not Repaired per §60.482-7(d)(1)	0	0	0	0	0	0
NUMBER OF COMPONENTS						
Additions/Deletions	+0/-9					
PUMPS						
NUMBER FOUND LEAKING						
§60.482-2(b) and (d)(6)(i)	0	0	0	0	0	0
DELAY OF REPAIR						
Not Repaired per 60.482-2(c)(1) and (d)(6)(ii)	0	0	0	0	0	0
Additions/Deletions	0					
COMPRESSORS						
NUMBER FOUND LEAKING						
§60.482-3(f)	0	0	0	0	0	0
DELAY OF REPAIR						
Not Repaired per §60.482-3(g)(1)	0	0	0	0	0	0
NUMBER OF COMPONENTS						
Additions/Deletions	0					

DATES OF SHUTDOWNS OCCURRING DURING THIS PERIOD:

None.

DELAY OF REPAIR DOCUMENTATION:

N/A

VALERO REFINING– TEXAS, L.P.; HOUSTON REFINERY NSPS GGG SEMI-ANNUAL REPORT [§60.487(c)]						
Unit Identification: ROSE Unit			**Report Date: 1/23/2012**			
Account #: HG-0130-C			**Person Completing Report: Matt Lindquist**			
	JUL	**AUG**	**SEP**	**OCT**	**NOV**	**DEC**
VALVES						
NUMBER FOUND LEAKING						
§60.482-7(b) or §60.483-2	1	0	0	2	0	0
DELAY OF REPAIR						
Not Repaired per §60.482-7(d)(1)	0	0	0	0	0	0
NUMBER OF COMPONENTS						
Additions/Deletions	+13/-33					
PUMPS						
NUMBER FOUND LEAKING						
§60.482-2(b) and (d)(6)(i)	0	0	0	1	0	0
DELAY OF REPAIR						
Not Repaired per 60.482-2(c)(1) and (d)(6)(ii)	0	0	0	0	0	0
Additions/Deletions	0					
COMPRESSORS						
NUMBER FOUND LEAKING						
§60.482-3(f)	1	0	0	0	0	0
DELAY OF REPAIR						
Not Repaired per §60.482-3(g)(1)	1	0	0	0	0	0
NUMBER OF COMPONENTS						
Additions/Deletions	0					
DATES OF SHUTDOWNS OCCURRING DURING THIS PERIOD: N/A						
DELAY OF REPAIR DOCUMENTATION: N/A						

VALERO REFINING– TEXAS, L.P.; HOUSTON REFINERY

NSPS GGG SEMI-ANNUAL REPORT [§60.487(c)]

Unit Identification: ULSD Unit | **Report Date: 1/23/2012**

Account #: HG-0130-C | **Person Completing Report: Matt Lindquist**

	JUL	AUG	SEP	OCT	NOV	DEC
VALVES						
NUMBER FOUND LEAKING						
§60.482-7(b) or §60.483-2	0	6	0	0	0	0
DELAY OF REPAIR						
Not Repaired per §60.482-7(d)(1)	0	0	0	0	0	0
NUMBER OF COMPONENTS						
Additions/Deletions	+6/-0					
PUMPS						
NUMBER FOUND LEAKING						
§60.482-2(b) and (d)(6)(i)	0	0	0	0	0	0
DELAY OF REPAIR						
Not Repaired per 60.482-2(c)(1) and (d)(6)(ii)	0	0	0	0	0	0
Additions/Deletions	+0/-2					
COMPRESSORS						
NUMBER FOUND LEAKING						
§60.482-3(f)	0	0	0	0	0	0
DELAY OF REPAIR						
Not Repaired per §60.482-3(g)(1)	0	0	0	0	0	0
NUMBER OF COMPONENTS						
Additions/Deletions	0					

DATES OF SHUTDOWNS OCCURRING DURING THIS PERIOD:

N/A

DELAY OF REPAIR DOCUMENTATION:

N/A

ATTACHMENT V

MACT SUBPART CC

SEMI-ANNUAL MONITORING REPORT

VALERO REFINING - TEXAS, L.P.; HOUSTON REFINERY
SEMI-ANNUAL REPORT - REFINERY MACT UNITS
PERIOD: JULY 1, 2011 - DECEMBER 31, 2011

Unit Identification:	PLANTWIDE	**Report Date:**	1/24/2012
Account #:	HG-0130-C	**Report By:**	Matt Lindquist

	JUL-SEP	OCT-DEC
VALVES		
Leakers*	39	27
Total Components Monitored	11991	11807
Percent Leaking*	0.33	0.23
2-Consecutive Quarter Average	0.41	0.28

	JUL-SEP			OCT-DEC		
PUMPS						
Leakers	2	0	4	2	1	1
Total Components Monitored	126	125	137	117	134	117
Percent Leaking**	1.59	0.00	2.92	1.71	0.75	0.85
Rolling 6-Month Average	1.43%			1.26%		

* Includes leaks found through quarterly monitoring as required by 63.168(b).

** Includes leaks found through monthly monitoring as required by 63.163(b)(1) and (b)(2) only.

VALERO REFINING - TEXAS, L.P.; HOUSTON REFINERY
SEMI-ANNUAL REPORT - REFINERY MACT UNITS
PERIOD: JULY 1, 2011 - DECEMBER 31, 2011

Unit Identification:	ALKYLATION (22)	**Report Date:**	1/24/2012
Account #:	HG-0130-C	**Report By:**	Matt Lindquist

	JUL	AUG	SEP	OCT	NOV	DEC
VALVES						
Number Found Leaking						
63.168(b)	3			2		
Delay of Repair						
Not repaired per 63.169(f)	0			0		
Number of Components						
Additions (Deletions)	0(5)			0(0)		
Total Components Monitored	250			200		
Percent Leaking	Per 63.648(c)(3), the percent leaking valves is calculated sourcewide.					
PUMPS						
Number Found Leaking						
63.163(b)(1), (b)(2)	0	0	0	0	0	0
Visual - 63.163(b)(3)	0			0		
Delay of Repair						
Not repaired per 63.163(c)	0			0		
Number of Components						
Additions (Deletions)	0			0		
Total Components Monitored 63.163(b)(1), (b)(2)	3	3	3	3	3	3
Percent Leaking	Per 63.163(d)(1), the percent leaking pumps is calculated sourcewide.					

COMPRESSORS

There are no compressors in Refinery MACT service in this unit.

PROCESS UNIT SHUTDOWNS DURING PERIOD

N/A

DELAY OF REPAIR DOCUMENTATION

N/A

VALERO REFINING - TEXAS, L.P.; HOUSTON REFINERY
SEMI-ANNUAL REPORT - REFINERY MACT UNITS
PERIOD: JULY 1, 2011 - DECEMBER 31, 2011

Unit Identification:	COMBO (23)	**Report Date:**	1/24/2012
Account #:	HG-0130-C	**Report By:**	Matt Lindquist

	JUL	AUG	SEP	OCT	NOV	DEC
VALVES						
Number Found Leaking						
63.168(b)	2			2		
Delay of Repair						
Not repaired per 63.169(f)	0			0		
Number of Components						
Additions (Deletions)	16(9)			0(0)		
Total Components Monitored	1702			1594		
Percent Leaking	Per 63.648(c)(3), the percent leaking valves is calculated sourcewide.					
PUMPS						
Number Found Leaking						
63.163(b)(1), (b)(2)	0	0	0	0	0	0
Visual - 63.163(b)(3)	0			0		
Delay of Repair						
Not repaired per 63.163(c)	0			0		
Number of Components						
Additions (Deletions)	0			0(3)		
Total Components Monitored 63.163(b)(1), (b)(2)	33	33	33	30	30	30
Percent Leaking	Per 63.163(d)(1), the percent leaking pumps is calculated sourcewide.					

COMPRESSORS

There are no compressors in Refinery MACT service in this unit.

PROCESS UNIT SHUTDOWNS DURING PERIOD

N/A

DELAY OF REPAIR DOCUMENTATION

N/A

VALERO REFINING - TEXAS, L.P.; HOUSTON REFINERY
SEMI-ANNUAL REPORT - REFINERY MACT UNITS
PERIOD: JULY 1, 2011 - DECEMBER 31, 2011

Unit Identification:	PLATFORMER (27)	**Report Date:**	1/24/2012
Account #:	HG-0130-C	**Report By:**	Matt Lindquist

	JUL	AUG	SEP	OCT	NOV	DEC
VALVES						
Number Found Leaking						
63.168(b)	1			0		
Delay of Repair						
Not repaired per 63.169(f)	0			0		
Number of Components						
Additions (Deletions)	0(11)			0(0)		
Total Components Monitored	392			390		
Percent Leaking	Per 63.648(c)(3), the percent leaking valves is calculated sourcewide.					
PUMPS						
Number Found Leaking						
63.163(b)(1), (b)(2)	0	0	0	0	0	0
Visual - 63.163(b)(3)	0			0		
Delay of Repair						
Not repaired per 63.163(c)	0			0		
Number of Components						
Additions (Deletions)	0			0		
Total Components Monitored 63.163(b)(1), (b)(2)	2	2	2	2	2	2
Percent Leaking	Per 63.163(d)(1), the percent leaking pumps is calculated sourcewide.					

COMPRESSORS

There are no compressors in Refinery MACT service in this unit.

PROCESS UNIT SHUTDOWNS DURING PERIOD

N/A

DELAY OF REPAIR DOCUMENTATION

N/A

VALERO REFINING - TEXAS, L.P.; HOUSTON REFINERY
SEMI-ANNUAL REPORT - REFINERY MACT UNITS
PERIOD: JULY 1, 2011 - DECEMBER 31, 2011

Unit Identification:	C UNIFINER (27A)	**Report Date:**	1/24/2012
Account #:	HG-0130-C	**Report By:**	Matt Lindquist

	JUL	AUG	SEP	OCT	NOV	DEC
VALVES						
Number Found Leaking						
63.168(b)	0			0		
Delay of Repair						
Not repaired per 63.169(f)	0			0		
Number of Components						
Additions (Deletions)	0			0		
Total Components Monitored	60			60		
Percent Leaking	Per 63.648(c)(3), the percent leaking valves is calculated sourcewide.					
PUMPS						
Number Found Leaking						
63.163(b)(1), (b)(2)	0	0	0	0	0	0
Visual - 63.163(b)(3)	0			0		
Delay of Repair						
Not repaired per 63.163(c)	0			0		
Number of Components						
Additions (Deletions)	0			0		
Total Components Monitored 63.163(b)(1), (b)(2)	2	2	2	2	2	2
Percent Leaking	Per 63.163(d)(1), the percent leaking pumps is calculated sourcewide.					

COMPRESSORS

There are no compressors in Refinery MACT service in this unit.

PROCESS UNIT SHUTDOWNS DURING PERIOD

None.

DELAY OF REPAIR DOCUMENTATION

N/A

VALERO REFINING - TEXAS, L.P.; HOUSTON REFINERY
SEMI-ANNUAL REPORT - REFINERY MACT UNITS
PERIOD: JULY 1, 2011 - DECEMBER 31, 2011

Unit Identification:	A UNIFINER (28)	**Report Date:**	1/24/2012
Account #:	HG-0130-C	**Report By:**	Matt Lindquist

	JUL	AUG	SEP	OCT	NOV	DEC
VALVES						
Number Found Leaking						
63.168(b)	0			0		
Delay of Repair						
Not repaired per 63.169(f)	0			0		
Number of Components						
Additions (Deletions)	0(7)			0		
Total Components Monitored	500			500		
Percent Leaking	Per 63.648(c)(3), the percent leaking valves is calculated sourcewide.					
PUMPS						
Number Found Leaking						
63.163(b)(1), (b)(2)	0	0	0	0	0	0
Visual - 63.163(b)(3)	0			0		
Delay of Repair						
Not repaired per 63.163(c)	0			0		
Number of Components						
Additions (Deletions)	0			0		
Total Components Monitored 63.163(b)(1), (b)(2)	5	5	5	5	5	5
Percent Leaking	Per 63.163(d)(1), the percent leaking pumps is calculated sourcewide.					
COMPRESSORS						
There are no compressors in Refinery MACT service in this unit.						
PROCESS UNIT SHUTDOWNS DURING PERIOD						
None.						
DELAY OF REPAIR DOCUMENTATION						
N/A						

VALERO REFINING - TEXAS, L.P.; HOUSTON REFINERY
SEMI-ANNUAL REPORT - REFINERY MACT UNITS
PERIOD: JULY 1, 2011 - DECEMBER 31, 2011

Unit Identification:	**B GDU (29)**		**Report Date:**		**1/24/2012**	
Account #:	**HG-0130-C**		**Report By:**		**Matt Lindquist**	
	JUL	**AUG**	**SEP**	**OCT**	**NOV**	**DEC**
VALVES						
Number Found Leaking						
63.168(b)	0			0		
Delay of Repair						
Not repaired per 63.169(f)	0			0		
Number of Components						
Additions (Deletions)	0			0		
Total Components Monitored	15			15		
Percent Leaking	Per 63.648(c)(3), the percent leaking valves is calculated sourcewide.					
PUMPS						
There are no pumps in Refinery MACT service in this unit.						
COMPRESSORS						
There are no compressors in Refinery MACT service in this unit.						
PROCESS UNIT SHUTDOWNS DURING PERIOD						
None.						
DELAY OF REPAIR DOCUMENTATION						
N/A						

VALERO REFINING - TEXAS, L.P.; HOUSTON REFINERY
SEMI-ANNUAL REPORT - REFINERY MACT UNITS
PERIOD: JULY 1, 2011 - DECEMBER 31, 2011

Unit Identification:	ULSD (40)		**Report Date:**		1/24/2012	
Account #:	HG-0130-C		**Report By:**		Matt Lindquist	
	JUL	**AUG**	**SEP**	**OCT**	**NOV**	**DEC**
VALVES						
Number Found Leaking						
63.168(b)	1			0		
Delay of Repair						
Not repaired per 63.169(f)	0			0		
Number of Components						
Additions (Deletions)	0			0		
Total Components Monitored	1185			1184		
Percent Leaking	Per 63.648(c)(3), the percent leaking valves is calculated sourcewide.					
PUMPS						
Number Found Leaking						
63.163(b)(1), (b)(2)	0	0	0	0	0	0
Visual - 63.163(b)(3)	0			0		
Delay of Repair						
Not repaired per 63.163(c)	0			0		
Number of Components						
Additions (Deletions)	0(2)			0		
Total Components Monitored 63.163(b)(1), (b)(2)	4	4	2	2	2	2
Percent Leaking	Per 63.163(d)(1), the percent leaking pumps is calculated sourcewide.					
COMPRESSORS						
There are no compressors in Refinery MACT service in this unit.						
PROCESS UNIT SHUTDOWNS DURING PERIOD						
N/A						
DELAY OF REPAIR DOCUMENTATION						
N/A						

VALERO REFINING - TEXAS, L.P.; HOUSTON REFINERY
SEMI-ANNUAL REPORT - REFINERY MACT UNITS
PERIOD: JULY 1, 2011 - DECEMBER 31, 2011

Unit Identification:	D GDU (41)		**Report Date:**		1/24/2012	
Account #:	HG-0130-C		**Report By:**		Matt Lindquist	
	JUL	**AUG**	**SEP**	**OCT**	**NOV**	**DEC**
VALVES						
Number Found Leaking						
63.168(b)	0			7		
Delay of Repair						
Not repaired per 63.169(f)	0			0		
Number of Components						
Additions (Deletions)	0(0)			0(2)		
Total Components Monitored	838			815		
Percent Leaking	Per 63.648(c)(3), the percent leaking valves is calculated sourcewide.					
PUMPS						
Number Found Leaking						
63.163(b)(1), (b)(2)	1	0	0	1	0	0
Visual - 63.163(b)(3)	0			0		
Delay of Repair						
Not repaired per 63.163(c)	0			0		
Number of Components						
Additions (Deletions)	0			0		
Total Components Monitored 63.163(b)(1), (b)(2)	3	3	3	3	3	3
Percent Leaking	Per 63.163(d)(1), the percent leaking pumps is calculated sourcewide.					
COMPRESSORS						
There are no compressors in Refinery MACT service in this unit.						
PROCESS UNIT SHUTDOWNS DURING PERIOD						
N/A						
DELAY OF REPAIR DOCUMENTATION						
N/A						

VALERO REFINING - TEXAS, L.P.; HOUSTON REFINERY
SEMI-ANNUAL REPORT - REFINERY MACT UNITS
PERIOD: JULY 1, 2011 - DECEMBER 31, 2011

Unit Identification:	FCCU (42)	**Report Date:**	1/24/2012
Account #:	HG-0130-C	**Report By:**	Matt Lindquist

	JUL	AUG	SEP	OCT	NOV	DEC
VALVES						
Number Found Leaking						
63.168(b)	4			0		
Delay of Repair						
Not repaired per 63.169(f)	0			0		
Number of Components						
Additions (Deletions)	0(1)			0		
Total Components Monitored	837			837		
Percent Leaking	Per 63.648(c)(3), the percent leaking valves is calculated sourcewide.					
PUMPS						
Number Found Leaking						
63.163(b)(1), (b)(2)	0	0	0	0	0	0
Visual - 63.163(b)(3)	0			0		
Delay of Repair						
Not repaired per 63.163(c)	0			0		
Number of Components						
Additions (Deletions)	0(1)			0(0)		
Total Components Monitored 63.163(b)(1), (b)(2)	13	13	12	12	12	12
Percent Leaking	Per 63.163(d)(1), the percent leaking pumps is calculated sourcewide.					

COMPRESSORS

There are no compressors in Refinery MACT service in this unit.

PROCESS UNIT SHUTDOWNS DURING PERIOD

N/A

DELAY OF REPAIR DOCUMENTATION

N/A

VALERO REFINING - TEXAS, L.P.; HOUSTON REFINERY
SEMI-ANNUAL REPORT - REFINERY MACT UNITS
PERIOD: JULY 1, 2011 - DECEMBER 31, 2011

Unit Identification:	FCCU DEPENT (42C)	**Report Date:**	1/24/2012
Account #:	HG-0130-C	**Report By:**	Matt Lindquist

	JUL	AUG	SEP	OCT	NOV	DEC
VALVES						
Number Found Leaking						
63.168(b)	2			0		
Delay of Repair						
Not repaired per 63.169(f)	0			0		
Number of Components						
Additions (Deletions)	0 (0)			0 (0)		
Total Components Monitored	713			687		
Percent Leaking	Per 63.648(c)(3), the percent leaking valves is calculated sourcewide.					
PUMPS						
Number Found Leaking						
63.163(b)(1), (b)(2)	0	0	0	0	0	0
Visual - 63.163(b)(3)	0			1		
Delay of Repair						
Not repaired per 63.163(c)	0			0		
Number of Components						
Additions (Deletions)	0			0		
Total Components Monitored 63.163(b)(1), (b)(2)	3	2	2	2	2	2
Percent Leaking	Per 63.163(d)(1), the percent leaking pumps is calculated sourcewide.					
COMPRESSORS						
There are no compressors in Refinery MACT service in this unit.						
PROCESS UNIT SHUTDOWNS DURING PERIOD						
N/A						
DELAY OF REPAIR DOCUMENTATION						
N/A						

VALERO REFINING - TEXAS, L.P.; HOUSTON REFINERY
SEMI-ANNUAL REPORT - REFINERY MACT UNITS
PERIOD: JULY 1, 2011 - DECEMBER 31, 2011

Unit Identification:	**SATS GAS (44A)**		**Report Date:**		**1/24/2012**	
Account #:	**HG-0130-C**		**Report By:**		**Matt Lindquist**	
	JUL	**AUG**	**SEP**	**OCT**	**NOV**	**DEC**
VALVES						
Number Found Leaking						
63.168(b)	0			0		
Delay of Repair						
Not repaired per 63.169(f)	0			0		
Number of Components						
Additions (Deletions)	0(0)			0(0)		
Total Components Monitored	155			155		
Percent Leaking	Per 63.648(c)(3), the percent leaking valves is calculated sourcewide.					
PUMPS						
Number Found Leaking						
63.163(b)(1), (b)(2)	0	0	1	0	0	0
Visual - 63.163(b)(3)	0			0		
Delay of Repair						
Not repaired per 63.163(c)	0			0		
Number of Components						
Additions (Deletions)	0			2(0)		
Total Components Monitored 63.163(b)(1), (b)(2)	6	6	6	6	6	6
Percent Leaking	Per 63.163(d)(1), the percent leaking pumps is calculated sourcewide.					
COMPRESSORS						
There are no compressors in Refinery MACT service in this unit.						
PROCESS UNIT SHUTDOWNS DURING PERIOD						
N/A						
DELAY OF REPAIR DOCUMENTATION						
N/A						

VALERO REFINING - TEXAS, L.P.; HOUSTON REFINERY
SEMI-ANNUAL REPORT - REFINERY MACT UNITS
PERIOD: JULY 1, 2011 - DECEMBER 31, 2011

Unit Identification:	**A TANK FARM (90)**		**Report Date:**		**1/24/2012**	
Account #:	**HG-0130-C**		**Report By:**		**Matt Lindquist**	
	JUL	**AUG**	**SEP**	**OCT**	**NOV**	**DEC**
VALVES						
Number Found Leaking						
63.168(b)	25			10		
Delay of Repair						
Not repaired per 63.169(f)	0			0		
Number of Components						
Additions (Deletions)	0(82)			0(5)		
Total Components Monitored	4634			4659		
Percent Leaking	Per 63.648(c)(3), the percent leaking valves is calculated sourcewide.					
PUMPS						
Number Found Leaking						
63.163(b)(1), (b)(2)	0	0	2	1	1	0
Visual - 63.163(b)(3)	1			3		
Delay of Repair						
Not repaired per 63.163(c)	0			0		
Number of Components						
Additions (Deletions)	0(3)			0		
Total Components Monitored 63.163(b)(1), (b)(2)	47	47	62	45	62	45
Percent Leaking	Per 63.163(d)(1), the percent leaking pumps is calculated sourcewide.					
COMPRESSORS						
There are no compressors in Refinery MACT service in this unit.						
PROCESS UNIT SHUTDOWNS DURING PERIOD						
N/A						
DELAY OF REPAIR DOCUMENTATION						
N/A						

VALERO REFINING - TEXAS, L.P.; HOUSTON REFINERY
SEMI-ANNUAL REPORT - REFINERY MACT UNITS
PERIOD: JULY 1, 2011 - DECEMBER 31, 2011

Unit Identification:	**B TANK FARM (91)**		**Report Date:**		**1/24/2012**	
Account #:	**HG-0130-C**		**Report By:**		**Matt Lindquist**	
	JUL	**AUG**	**SEP**	**OCT**	**NOV**	**DEC**
VALVES						
Number Found Leaking						
63.168(b)	1			6		
Delay of Repair						
Not repaired per 63.169(f)	0			0		
Number of Components						
Additions (Deletions)	0(0)			0(0)		
Total Components Monitored	710			711		
Percent Leaking	Per 63.648(c)(3), the percent leaking valves is calculated sourcewide.					
PUMPS						
Number Found Leaking						
63.163(b)(1), (b)(2)	0	0	0	0	0	0
Visual - 63.163(b)(3)	1			0		
Delay of Repair						
Not repaired per 63.163(c)	0			0		
Number of Components						
Additions (Deletions)	0			0		
Total Components Monitored 63.163(b)(1), (b)(2)	5	5	5	5	5	5
Percent Leaking	Per 63.163(d)(1), the percent leaking pumps is calculated sourcewide.					
COMPRESSORS						
There are no compressors in Refinery MACT service in this unit.						
PROCESS UNIT SHUTDOWNS DURING PERIOD						
N/A						
DELAY OF REPAIR DOCUMENTATION						
N/A						

A1/A1/CO

110000460885

V. 23

TX

VALERO

FEB 01 2012

RECEIVE

FEB 1 2012

Air/Toxics & Inspection Coordination Branch

6EN-A

January 30, 2012

John Sadlier, Deputy Director
Office of Compliance and Enforcement (MC-172)
Texas Commission on Environmental Quality
P.O. Box 13087
Austin, TX 78711-3087

Re: Semiannual Report NSPS Subpart QQQ
Reporting Period July 1 to December 31, 2011
Valero Refining – Texas, L.P. (Valero), Houston Refinery, Harris County
Certification of Control Equipment Inspections – 40 CFR §60.698(b)(1)
TCEQ Account No. HG-0130-C
Operating Permit No. O1381
Regulated Entity No. RN100219310

Dear Mr. Sadlier:

Enclosed, please find the semi-annual certification report for the period July 1 to December 31, 2011 as required under Subpart QQQ of the New Source Performance Standards (NSPS). Valero certifies that the required inspections have been carried out in accordance with the standards in 40 CFR Part 60, Subpart QQQ during the 2nd Half of 2011. In addition and pursuant to this subpart, Valero is submitting the attached report following the regulatory format outlined in 40 CFR §60.698(c).

In accordance with the provisions in 30 TAC §122.165(a)(7), a Certification by Responsible Official (OP-CRO1) Form signed by the Responsible Official certifying the information contained in this report is enclosed.

Should you have any questions regarding this report, please contact me at 713-924-1524.

Sincerely,

Christopher Abshire

Christopher Abshire
Manager, Environmental Engineering

Enclosures

cc: Certified Mail No. 7007 1490 0002 5609 2253 (Sadlier)

Mr. David Garcia, Director-Air/Toxics & Insp. Coord. Branch (6EN-A), U.S. EPA, Dallas, TX
Certified Mail No. 7007 1490 0002 5609 2260

Ms. Linda Vasse, Regional Director – Region 12, TCEQ, Houston, TX
Certified Mail No. 7007 1490 0002 5609 2277

Mr. Mark Vickery, Executive Director, TCEQ, Austin, TX
Certified Mail No. 7007 1490 0002 5609 2284

Mr. Arturo Blanco, Pollution Chief, BAQC – City of Houston, Houston, TX
Certified Mail No. 7007 1490 0002 5609 2291

Mr. Michael Shaffer, Director, Pollution Control Division, HCPCD, Pasadena, TX
Certified Mail No. 7007 1490 0002 5609 2307

Form OP-CRO1
Certification by Responsible Official
Federal Operating Permit Program

All initial permit application, revision, renewal, and reopening submittals requiring certification must be addressed using this form. Updates to site operating permit (SOP) and temporary operating permit (TOP) applications, other than public notice verification materials, must be certified prior to authorization of public notice or start of public announcement. Updates to general operating permit (GOP) applications must be certified prior to receiving an authorization to operate under a GOP.

I. IDENTIFYING INFORMATION

A. RN: 100219310	B. CN: 600127468	C. Account No.: HG-0130-C
D. Permit No.: O1381	E. Project No.:	
F. Area Name: Houston Refinery		
G. Company Name: Valero Refining – Texas, L.P.		

II. CERTIFICATION TYPE *(Please mark the appropriate box)*

A. ☒ Responsible Official: B. ☐ Duly Authorized Representative:

III. SUBMITTAL TYPE *(Place an "X" in the appropriate box) (Only one response can be accepted per form)*

☐ SOP/TOP Initial Permit Application	☐ Update to Permit Application
☐ GOP Initial Permit Application	☐ Permit Revision, Renewal, or Reopening
☒ Other: NSPS QQQ Semi-annual Report	

IV. CERTIFICATION OF TRUTH

This certification does not extend to information which is designated by the TCEQ as information for reference only.

I, Robert E. Moore *(Certifier Name printed or typed)*, certify that I am the RO *(RO or DAR)* for this application and that, based on information and belief formed after reasonable inquiry, the statements and information dated during the time period in Section IV.A below, or on the specific date(s) in Section IV.B below, are true, accurate, and complete:

Note: Enter EITHER a Time Period OR Specific Date(s) for each certification. This section must be completed. The certification is not valid without documentation date(s).

A. Time Period: From _____ *Start Date** to _____ *End Date**

OR

B. Specific Dates: 01/30/12 *Date 1** _____ *Date 2** _____ *Date 3** _____ *Date 4** _____ *Date 5** _____ *Date 6** _____ *Date 7** _____ *Date 8**

**The Time Period option may only be used when the "Submittal Type" is 'Update to Permit Application' and there are multiple uncertified submittals; or a submittal package has multiple dates recorded in the documentation. Do not use the Time Period option if the "Submittal Type" is 'Other.'*

Signature: _____ Signature Date: 1/30/12

Title: Vice President & General Manager

VALERO HOUSTON REFINERY SEMI-ANNUAL REPORT, NSPS SUBPART QQQ
2nd Semi-Annual Reporting Period - 2011

Report Date : 1/18/2012

Person Completing Form : Matthew Lindquist

Month	Process Drain ID	Status (40 CFR 60.692-2(a)(5))	Corrective Action Taken (40 CFR 60.697(b)(i))
July	53747	No water in p-trap	Water was added to p-trap
	54746	No water in p-trap	Water was added to p-trap
	46-456	No water in insert	Water was added to insert
August	52993	No water in insert	Water was added to insert
	53747	No water in p-trap	Water was added to p-trap
	53746	No water in p-trap	Water was added to p-trap
	42-0673	No water in insert	Water was added to insert
	29-0706	No water in p-trap	Water was added to p-trap
September	No Deficiencies		
October	42-0673	No water in insert	Water was added to insert
November	52993	No water in insert	Water was added to insert
	46-456	No water in insert	Water was added to insert
	42-0673	No water in insert	Water was added to insert
	41-2477	Insert cap removed	Insert cap was replaced
December	39-105	No water in insert	Water was added to insert
	42-0673	No water in insert	Water was added to insert

Note: This report summarizes all inspections when a water seal was dry or otherwise breached, when a drain cap or plug was missing or improperly installed, or when cracks, gaps or other problems were identified, when doors and other openings were not closed or gasketed or seal gaps in floating roofs exceeded the allowable.

Report Date : 1/18/2012

Person Completing Form : Matthew Lindquist

Houston Refinery Downstream Unit

Junction Boxes - ID #	**Status (40 CFR 60.692-2(b)(2))**	**Corrective Action Taken (40 CFR 60.697(b)(2))**
42PS060	Gaps in gasketing seal	Replaced gasketing seal along with caulking
47MH520	Cracks in seal	The cracks were resealed with epoxy caulking
47MH550	Gap in gasketing seal	The gaps were resealed with epoxy caulking
API Separator	**Status (40 CFR 60.692-3(a)(4))**	**Corrective Action Taken (40 CFR 60.697(c))**
No deficiencies		
Slop Tanks	**Status (40 CFR 60.692-3(a)(4))**	**Corrective Action Taken (40 CFR 60.697(c))**
No deficiencies		
Sewer Lines	**Status (40 CFR 60.692-2(c)(2))**	**Corrective Action Taken (40 CFR 60.697(b)(3))**
No deficiencies		

Note: This report summarizes all inspections when a water seal was dry or otherwise breached, when a drain cap or plug was missing or improperly installed, or when cracks, gaps or other problems were identified, when doors and other openings were not closed or gasketed or seal gaps in floating roofs exceeded the allowable.

A1/A1/Co

110000460885

VALERO

FEB 01 2012
RECEIVE
FEB 1 2012
Air/Toxics & Inspection
Coordination Branch
SE.1-A

434782

January 30, 2012

John Sadlier, Deputy Director
Office of Compliance and Enforcement (MC-172)
Texas Commission on Environmental Quality
P.O. Box 13087
Austin, TX 78711-3087

Re: Quarterly Report NESHAP Subpart FF – 40 CFR §61.357
Certification of Control Equipment Inspections – 40 CFR §61.357(d)(6)
Reporting Period October 1 to December 31, 2011
Valero Refining – Texas, L.P. (Valero), Houston Refinery, Harris County
TCEQ Account No. HG-0130-C
Operating Permit No. O1381
Regulated Entity No. RN100219310

Dear Mr. Sadlier:

Enclosed, please find the quarterly certification report for the period October 1 to December 31, 2011 as required under Subpart FF of the National Emission Standards for Benzene Waste Operations NESHAPS (BWON) – 6BQ Compliance Option. Valero certifies that the required inspections have been carried out in accordance with the standards in 40 CFR Part 61, Subpart FF, and more particularly the 6BQ compliance option, during the Fourth Quarter of 2011. In addition and pursuant to this subpart, Valero submits the attached report following the regulatory format outlined in 40 CFR §61.357(d)(i-v).

Pursuant to the Section §114 Consent Decree Civil Action No. SA-05-CA-0569, Valero is also submitting the results of the 4th Quarter 2011 End-of-Line (EOL) sampling in accordance with Section X.M, paragraph 176(iii) of the consent decree.

The sum of EOL benzene loadings for the 4th Quarter 2011 is 0.77 Mg which is less than the quarterly target of 1.5 Mg. For the 4 Quarters of 2011, the sum of EOL benzene loadings is 3.33 Mg. This was less than the 6.0 Mg annual limit.

As required and specified in Section X.G. of the Consent Decree, Valero conducts audits of all laboratories that perform analyses of benzene waste NESHAP samples collected at Valero's Houston Refinery initially and every 2 years thereafter. Please note that the most recently completed audit occurred during the 3rd Quarter of 2010.

As required and specified in Section X.I., Paragraph 154 of the Consent Decree, Valero maintains a computer based training (CBT) system to train new operators prior to assumption of their job duties and to provide refresher training at least once every three years for existing operators. Please note that the most recently completed refresher training was in the 4th Quarter 2009, however training for 2 new operators did occur during the 4th Quarter of 2011.

In addition, Valero maintains a presentation package to train new employees initially and existing employees annually who are asked to obtain benzene waste samples. Please note that refresher training for 1 sampler was most completed during the 4th Quarter of 2011.

In accordance with the provisions in 30 TAC §122.165(a)(7), a Certification by Responsible Official (OP-CRO1) Form signed by the Responsible Official certifying the information contained in this report is enclosed.

Should you have any questions regarding this report, please contact me at 713-924-1524.

Sincerely,

Christopher Abshire
Manager, Environmental Engineering

Enclosures

cc: Certified Mail No. 7007 1490 0002 5609 2376 (Sadlier)

Mr. David Garcia, Chief-Air/Toxics & Insp. Coord. Branch (6EN-A), U.S. EPA, Dallas, TX
Certified Mail No. 7007 1490 0002 5609 2383

Ms. Linda Vasse, Regional Director – Region 12, TCEQ, Houston, TX
Certified Mail No. 7007 1490 0002 5609 2390

Director, Air Enforcement Division (2242A), OECA, U.S. EPA, Washington D.C.
Certified Mail No. 7007 1490 0002 5609 2406

Office of the Attorney General of the State of Texas, Natural Resource Division, Austin, TX
Certified Mail No. 7007 1490 0002 5609 2413

Mr. Mark Vickery, Executive Director, TCEQ, Austin, TX
Certified Mail No. 7007 1490 0002 5609 2420

Mr. Arturo Blanco, Pollution Chief, BAQC – City of Houston, Houston, TX
Certified Mail No. 7007 1490 0002 5609 2437

Mr. Michael Shaffer, Director, Pollution Control Division, HCPCD, Pasadena, TX
Certified Mail No. 7007 1490 0002 5609 2444

With .pdf copy of file to:

csullivan@matrixneworld.com; and
braby.sharon@epa.gov

Form OP-CRO1
Certification by Responsible Official
Federal Operating Permit Program

All initial permit application, revision, renewal, and reopening submittals requiring certification must be addressed using this form. Updates to site operating permit (SOP) and temporary operating permit (TOP) applications, other than public notice verification materials, must be certified prior to authorization of public notice or start of public announcement. Updates to general operating permit (GOP) applications must be certified prior to receiving an authorization to operate under a GOP.

I. IDENTIFYING INFORMATION

A. RN: 100219310	B. CN: 600127468	C. Account No.: HG-0130-C
D. Permit No.: O1381	E. Project No.:	
F. Area Name: Houston Refinery		
G. Company Name: Valero Refining – Texas, L.P.		

II. CERTIFICATION TYPE *(Please mark the appropriate box)*

A. ☒ Responsible Official:	B. ☐ Duly Authorized Representative:

III. SUBMITTAL TYPE *(Place an "X" in the appropriate box) (Only one response can be accepted per form)*

☐ SOP/TOP Initial Permit Application	☐ Update to Permit Application
☐ GOP Initial Permit Application	☐ Permit Revision, Renewal, or Reopening
☒ Other: NESHAP FF Monitoring Report	

IV. CERTIFICATION OF TRUTH

This certification does not extend to information which is designated by the TCEQ as information for reference only.

I, Robert E. Moore, certify that I am the RO for this application
(Certifier Name printed or typed) *(RO or DAR)*

and that, based on information and belief formed after reasonable inquiry, the statements and information dated during the time period in Section IV.A below, or on the specific date(s) in Section IV.B below, are true, accurate, and complete:

Note: Enter EITHER a Time Period OR Specific Date(s) for each certification. This section must be completed. The certification is not valid without documentation date(s).

A. Time Period: From _____ to _____
*Start Date** *End Date**

OR

B. Specific Dates: 1/30/12 _____ _____ _____ _____ _____ _____ _____
*Date 1** *Date 2** *Date 3** *Date 4** *Date 5** *Date 6** *Date 7** *Date 8**

**The Time Period option may only be used when the "Submittal Type" is 'Update to Permit Application' and there are multiple uncertified submittals; or a submittal package has multiple dates recorded in the documentation. Do not use the Time Period option if the "Submittal Type" is 'Other.'*

Signature: Robert E Moore Signature Date: 1/30/12

Title: Vice President & General Manager

Valero Houston Refinery
Benzene Waste Operations NESHAP End-of-Line (EOL) Quarterly Report
4th Quarter 2011

	EOL1			EOL2			EOL3			EOL4			EOL5			EOL6			EOL7				
	T-503 Water			T-323 Oil			Vacuum Trucks			Miscellaneous			DAF Float			T-504			T-503 Oil				
Week Beginning	Yield, bbl/day	Benzene, mg/L	Benzene Quantity Mg	Yield bbl/day	Benzene mg/L	Benzene Quantity Mg	Flow, bbl/day	Benzene, mg/L	Benzene Quantity Mg	Yield bbl/week	Benzene mg/L	Benzene Quantity Mg	Yield bbl/day	Benzene mg/L	Benzene Quantity Mg	Yield bbl/day	Benzene mg/L	Benzene Quantity Mg	Yield bbl/day	Benzene mg/L	Benzene Quantity Mg	Benzene Quantity Weekly Mg/yr	Cumulative Benzene Quantity Mg/quarter
10/03/11	27,691	0.47	0.014	85	32.90	0.003	41	22.41	0.001	1494	10.47	0.002	27	2.66	0.000	0	0.29	0.000	0	54.80	0.000	0.02	0.02
10/10/11	29,292	0.63	0.018	77	269.00	0.020	103	22.41	0.003	1494	10.47	0.002	28	2.66	0.000	0	0.29	0.000	0	54.80	0.000	0.04	0.06
10/17/11	34,267	0.28	0.016	42	10.70	0.005	41	22.41	0.001	1494	10.47	0.002	27	0.00	0.000	1010	0.11	0.000	0	54.80	0.000	0.02	0.09
10/24/11	42,755	0.39	0.018	65	459.00	0.028	111	28.44	0.004	1494	10.47	0.002	30	0.00	0.000	0	0.11	0.000	0	54.80	0.000	0.05	0.14
10/31/11	48,671	0.75	0.030	103	432.00	0.044	72	28.44	0.002	1494	10.47	0.002	28	0.00	0.000	1010	0.11	0.000	0	54.80	0.000	0.08	0.22
11/07/11	46,838	0.75	0.041	65	432.00	0.027	38	28.44	0.001	1494	10.47	0.002	43	0.00	0.000	0	0.11	0.000	0	54.80	0.000	0.07	0.29
11/14/11	49,442	1.00	0.053	92	203.00	0.018	79	13.13	0.001	1494	10.47	0.002	31	0.01	0.000	0	0.11	0.000	0	54.80	0.000	0.07	0.36
11/21/11	47,042	1.91	0.100	0	246.00	0.000	157	13.13	0.002	1494	10.47	0.002	28	0.01	0.000	0	0.90	0.000	0	54.80	0.000	0.10	0.47
11/28/11	26,808	3.07	0.092	36	198.00	0.007	100	13.13	0.001	1494	10.47	0.002	29	0.01	0.000	120	0.90	0.000	0	54.80	0.000	0.10	0.57
12/05/11	19,641	1.61	0.045	18	356.00	0.005	76	13.13	0.001	1494	10.47	0.002	44	0.01	0.000	1367	0.90	0.001	0	54.80	0.000	0.06	0.63
12/12/11	22,358	0.71	0.021	3	84.60	0.000	77	13.13	0.001	1494	10.47	0.002	29	0.01	0.000	0	0.90	0.000	0	54.80	0.000	0.02	0.65
12/19/11	22,087	1.08	0.025	0	85.20	0.000	30	13.13	0.000	1494	10.47	0.002	44	0.05	0.000	1094	0.52	0.001	1000	54.80	0.061	0.09	0.74
12/26/11	18,295	1.12	0.023	39	85.20	0.003	43	10.55	0.001	1494	10.47	0.002	55	0.05	0.000	932	0.52	0.001	0	54.80	0.000	0.03	0.77

MONITORING PARAMETER VARIANCE REPORT

VALERO HOUSTON REFINERY
4th QUARTER 2011 – October 1 to December 31

The following information is submitted as outlined in 40 CFR 61.357 (d) (7) (i-v):

61.357(d)(7)(i): BENZENE IN EXITING WASTE STREAM
This section is not applicable.

61.357(d)(7)(ii): MONITORED PARAMETER
This section is not applicable.

61.357(d)(7)(iii): BENZENE IN ENTERING WASTE STREAM
This section is not applicable.

61.357(d)(7)(iv)(A): THERMAL VAPOR INCINERATOR
This section is not applicable.

61.357(d)(7)(iv)(B): CATALYTIC VAPOR INCINERATOR
This section is not applicable.

61.357(d)(7)(iv)(C): BOILER/PROCESS HEATER
This section is not applicable.

61.357(d)(7)(iv)(D): CONTINUOUS MONITORING/VAPOR RECOVERY SYSTEM
This section is not applicable.

61.357(d)(7)(iv)(E): CONDENSER EXHAUST VENT SYSTEM
This section is not applicable.

61.357(d)(7)(iv)(F): PILOT FLAME
This section is not applicable.

61.357(d)(7)(iv)(G): BOILER/PROCESS HEATER
This section is not applicable.

61.357(d)(7)(iv)(H): CARBON REGENERATED ON SITE
This section is not applicable.

61.357(d)(7)(iv)(I): CARBON NOT REGENERATED ON SITE
This section is not applicable.

61.357(d)(7)(iv)(J): CONTROL DEVICES
This section is not applicable.

61.357(d)(7)(v): PRESSURE/WASTE MANAGEMENT UNIT
This section is not applicable.

Scan

AI/AI/CO

1100046088 5

T 885
L 23

VALERO

Certified Mail No. 7007 2680 0000 4912 0482

February 1, 2012

Mr. Mark Vickery
Executive Director
TCEQ
P.O. Box 13087
Austin, Texas 78711-3087

Re: External Floating Roof Tank Seal Gap Measurement Reports
Tanks 90FB511 (Secondary Seal gap measurement) and 90FB004 (Primary & Secondary)
Valero Refining-Texas, L.P. (Valero)
Houston Refinery, Harris County
TCEQ Account No. HG-0130-C
Federal Operating Permit No. O-01381
TCEQ Customer No. CN600127468
TCEQ Regulated Entity No. RN100219310

Dear Mr. Vickery:

Valero hereby provides the results of the external floating roof seal gap measurements as required under 40 CFR §60.115b(b)(2) and 40 CFR §63.122(e)(1).

Please note that Tanks 90FB511 and 90FB004 are affected by the provisions of 40 CFR 60, Subpart Kb and 40 CFR 63, Subpart CC and Texas Administrative Code (TAC) §30 TAC 115.

If you have any questions, please contact me at (713) 923-3345.

Sincerely,

Preethi C. Joseph
Senior Environmental Engineer

PROCESSED BY REGION ON
DATE FEB 8 2012

cc: Mr. David Garcia, Director, Air, Pesticides, and Toxics Division, U.S. EPA, Dallas, TX
Certified Mail No. 7007 2680 0000 4912 0529 (In Duplicate)

Ms. Linda Vasse, Regional Director, TCEQ Region 12, Houston, TX
Certified Mail No. 7007 2680 0000 4912 0512

Mr. Arturo Blanco, Pollution Chief, BAQC – City of Houston, Houston, TX
Certified Mail No. 7007 2680 0000 4912 0499

Mr. Michael Shaffer, Director, Pollution Control Division, HCPCD, Pasadena, TX
Certified Mail No. 7007 2680 0000 4912 0505

ACR-116
Valero Refining – Texas, L.P.; Houston Refinery
EFR - Seal Gap Measurement of Secondary Seals
Wastewater Tanks

Inspector Shawn White Tank ID TK-511 Date 12/15/11

Tank Diameter 150 ft

Secondary Seal Rim Mounted? Yes ✓ No ___
Any location where gap exceeds 1/2 inch? Yes ___ No ✓
Accumulated area of seal gaps? 0 in²/ft tank diameter. Less than 1 in²/ft? Yes ✓ No ___
Any holes, tears or openings in shoe, seal fabric or seal envelope? Yes ___ No ✓

	Gap (in)	Length (in) or (ft)
A.		
B.		
C.		
D.		
E.		
F.		

Drawing

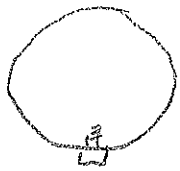

1W

Tank Fitting Criteria – An answer of "No" is a deficiency that must be repaired. It is also a deviation that must be reported to your supervisor.

	Yes	No	N/A
Are all automatic bleeder vents closed?	✓		
Are all rim vents closed?	✓		
Are all roof drains covered with slotted fabric covering >90% of opening?	✓		
Do all openings have a below-liquid projection or covered (except rim vents and bleeder vents).	✓		

1. Wherever the seal gap is 1/8 in or more, measure the gap and circumferential distance and show location of gap on drawing. Calculate seal gap measurements by summing the product of the gap and length for each gap (corrected to square inches) and divide by tank diameter.
2. For secondary seal gaps greater than or equal to 1/8" where the accumulated area of such gaps is greater than 1.0 square inch per foot of tank diameter, the excess emission calculation in 30 TAC §115.116(a)(2) must be calculated and reported on the TCEQ Emissions Inventory. Use Table 3-6a to perform and document this calculation.
3. For tanks that have deficiencies or seal gaps greater than the applicable standard, the following actions must be taken:

- Complete a First Report of Incident. The deficiency must be repaired or the tank must be taken out of service within a) 30 days for NSPS QQQ tanks, b) 45 days for NSPS Kb and MACT CC tanks, c) 60 days for TCEQ Reg. V tanks, or
- If the above steps cannot be taken, an extension may apply if the repair involves emptying the tank and no additional storage is available. Two-30 day extensions are available for TCEQ Reg. V and MACT CC tanks, one extension is available for NSPS Kb tanks. No extension is available for NSPS QQQ tanks.
- If a corrective action is needed, a report must be submitted to TCEQ within 30 days of the inspection [60.115b(b)(4)]. A repair extension request, if needed, must be submitted with this report.

Reporting Requirements -

- Submit a report to TCEQ within 60 days of the inspection with the information found at 60.115b(b)(2).
- If a corrective action is needed, a report must be submitted to TCEQ within 30 days of the inspection [60.115b(b)(4)]. A repair extension request, if needed, must be submitted with this report.

ACR 116
Valero Refining – Texas, L.P.; Houston Refinery
EFR - Seal Gap Measurement of Primary Seals*

Inspector Shaun White Tank ID #4 Date 1/26/12

Tank Diameter 190 ft

Primary Seal Type? Mechanical shoe ✓ Liquid mounted ___ Vapor mounted ___

Any location where gap exceeds 1-1/2 inch? Yes ___ No ✓

Accumulated area of seal gaps? C in²/ft tank diameter. Less than 10 in²/ft? Yes ✓ No ___

Any holes, tears or openings in shoe, seal fabric or seal envelope? Yes ___ No ✓

	Gap (in)	Length (in) or (ft)
A.		
B.		
C.		
D.		
E.		
F		
G.		

Drawing

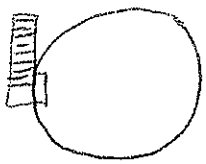

N

---

1. Wherever the seal gap is 1/8 in or more, measure the gap and circumferential distance and show location of gap on drawing. Calculate seal gap measurements by summing the product of the gap and length for each gap (corrected to square inches) and divide by tank diameter.

2. Tanks subject to NSPS Subpart Kb cannot have vapor mounted primary seals. For NSPS Ka tanks with vapor mounted primary seals, the allowable seal gap must be less than 1 in²/ft and the width of any gap must be below 1/2 in.

3. For tanks that have deficiencies or seal gaps greater than the applicable standard, the following actions must be taken:
   - The deficiency must be repaired or the tank must be taken out of service within 30 days for NSPS QQQ tanks and 45 days for NSPS Kb and MACT CC tanks.
   - If the above steps cannot be taken, an extension for repair may be available if repair involves removing the tank from service and alternate storage is limited. Two-30 day extensions are available for MACT CC tanks, one extension is available for NSPS Kb tanks. No extension is allowed for NSPS QQQ tanks.
   - If a corrective action is needed or if a repair extension is needed, this information can be included in the next MACT CC semi-annual report.
   - Upon any deficiency, write a First Report of Incident.

ACR-116
Valero Refining – Texas, L.P.; Houston Refinery
EFR - Seal Gap Measurement of Secondary Seals

Inspector Shawn White Tank ID #4 Date 1/26/12

Tank Diameter 190 ft

Secondary Seal Rim Mounted? Yes ✓ No ___
Any location where gap exceeds 1/2 inch? Yes ___ No ✓
Accumulated area of seal gaps? 0 in²/ft tank diameter. Less than 1 in²/ft? Yes ✓ No ___
Any holes, tears or openings in shoe, seal fabric or seal envelope? Yes ___ No ✓

	Gap (in)	Length (in) or (ft)
A.		
B.		
C.		
D.		
E.		
F.		

Drawing

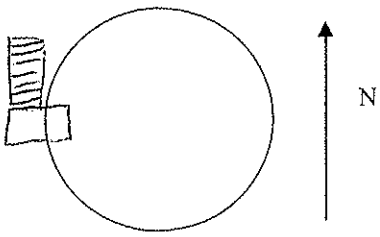

Tank Fitting Criteria – An answer of "No" is a deficiency that must be repaired. It is also a deviation that must be reported to your supervisor.

	Yes	No	N/A
Are all automatic bleeder vents closed?	✓		
Are all rim vents closed?	✓		
Are all roof drains covered with slotted fabric covering >90% of opening?	✓		
Do all openings have a below-liquid projection or covered (except rim vents and bleeder vents).	✓		

1. Wherever the seal gap is 1/8 in or more, measure the gap and circumferential distance and show location of gap on drawing. Calculate seal gap measurements by summing the product of the gap and length for each gap (corrected to square inches) and divide by tank diameter.

2. For secondary seal gaps greater than or equal to 1/8" where the accumulated area of such gaps is greater than 1.0 square inch per foot of tank diameter, the excess emission calculation in 30 TAC §115.116(a)(2) must be calculated and reported on the TCEQ Emissions Inventory. Use Table 3-6a to perform and document this calculation.

3. For tanks that have deficiencies or seal gaps greater than the applicable standard, the following actions must be taken:
   - Complete a First Report of Incident. The deficiency must be repaired or the tank must be taken out of service within a) 30 days for NSPS QQQ tanks, b) 45 days for NSPS Kb and MACT CC tanks, c) 60 days for TCEQ Reg. V tanks, or
   - If the above steps cannot be taken, an extension may apply if the repair involves emptying the tank and no additional storage is available. Two-30 day extensions are available for TCEQ Reg. V and MACT CC tanks, one extension is available for NSPS Kb tanks. No extension is available for NSPS QQQ tanks.
   - If a corrective action is needed or if a repair extension is needed, this information can be included in the next MACT CC semi-annual report.

A1/A1100 1100 460885 Garcia

VALERO

RECEIVE

FEB 22 2012

Air/Toxics & Inspection
Coordination Branch
6EN-A

CERTIFIED MAIL 7007 2680 0000 4912 1144

February 15, 2012

Mr. Manuel Bautista
Air Section Manager
Texas Commission on Environmental Quality – Region 12
5425 Polk St., Ste. H
Houston TX 77023-1452

RE: ***Notification of Intent to Conduct Relative Accuracy Test Audit***
NSR Permit No. 2507A
Operating Permit No. O1381
Valero Refining – Texas, L.P. (CN600127468)
Houston Refinery (RN100219310)
TCEQ Account No. HG-0130-C

Dear Mr. Bautista:

Valero Refining – Texas, L.P. (Valero) owns and operates a petroleum refinery located at 9701 Manchester Street, in Houston, Harris County, Texas. Valero's two (2) Sulfur Recovery Units (SRU B and SRU C) are authorized by the New Source Review (NSR) Permit No. 2507A. Special Condition No. 13.E. of this permit requires notification of any required Relative Accuracy Test Audit (RATA). Valero plans to conduct RATA on SRU B and SRU C on or after March 16, 2012.

If you have any questions regarding the information in this submittal, please call me at 713-924-1254.

Sincerely,

Christopher Abshire
Manager Environmental Engineering

cc: Mr. Michael Schaffer, Director, Harris County Public Health and Environmental Services, Pasadena 7007 2680 0000 4912 1021
Mr. Arturo Blanco, Bureau Chief of Air Quality Control, Health and Human Services Department, Houston 7007 2680 0000 4912 1137
John Blevins, Director Compliance Assurance and Enforcement Division, EPA Region 6 7007 2680 0000 4912 1120

1st Quarter 2012 SRU RATA Notification.docx

A1/A1/RA
1100046088S
450591

UNITED STATES ENVIRONMENTAL PROTECTION AGENCY
REGION 6
1445 ROSS AVENUE, SUITE 1200
DALLAS TX 75202-2733

February 21, 2012

Mr. Christopher Abshire
Manager, Environmental Engineering
Valero Refining-Texas, L.P.
Houston Refinery
Post Office Box 5038
Houston, TX 77262-5038

RE: Alternative Monitoring Plan (AMP) – New Source Performance Standards (NSPS) Part 60 Subpart J – Sulfur Collection Header 39FA1006 Vent Stream at C-Train Sulfur Recovery Unit (SRU) at the Valero Refining-Texas, L.P., Houston Refinery (Valero Houston), located in Houston, Texas; Consent Decree No. SA-05-CA-0569 (Valero CD).

Dear Mr. Abshire:

This letter is in response to the AMP request from Clayton Falcon of Valero Houston, dated November 19, 2007, concerning Sulfur Collection Header 39FA1006 at the C-Train SRU subject to NSPS Subpart J. The Environmental Protection Agency (EPA) has evaluated your request and finds that your AMP request is not necessary.

Specifically, the preamble discussions to the proposed and final amendment of Subpart J, effective June 24, 2008 (72 Federal Register 27180 and 73 Federal Register 35840 respectively) clarify that sulfur pits are part of the Claus sulfur recovery plant (SRP). Valero has documented that the Sulfur Collection Header 39FA1006 collects and routes produced sulfur to the sulfur pit, where oxidation control occurs within the C-Train SRU. The Sulfur Collection Header 39FA1006 vent stream at the C-Train Sulfur Recovery Unit (SRU) is routed to and combusted in the 39CB2001 Tail Gas Incinerator (TGI). Also, the TGI has a continuous monitoring system that demonstrates compliance with the emissions standard of 250 ppm by volume of sulfur dioxide (dry basis) at zero percent excess air, in accordance with 40 CFR 60.104(a)(2) and 60.105(a)(5). Therefore, NSPS Subpart J requirements are being met for the fuel gas stream and an AMP is not necessary.

If you have any questions or concerns about this determination, please feel free to contact Daniel Hoyt of my staff at (214) 665-7326.

Sincerely,

David F. Garcia
Associate Director
Air/Toxics Inspection
And Coordination Branch

cc: Michael De La Cruz (Texas Commission on Environmental Quality)
Salal Tahari (Texas Commission on Environmental Quality)
Arturo J. Blanco (Houston Department of Health and Human Services)
Michael Schaffer (Harris County Public Health Services)

A1/A1/RA

1100004660885

UNITED STATES ENVIRONMENTAL PROTECTION AGENCY
REGION 6
1445 ROSS AVENUE, SUITE 1200
DALLAS TX 75202-2733

February 21, 2012

Mr. Christopher Abshire
Manager, Environmental Engineering
Valero Refining-Texas, L.P.
Houston Refinery
Post Office Box 5038
Houston, TX 77262-5038

RE: Alternative Monitoring Plan (AMP) – New Source Performance Standards (NSPS) Part 60 Subpart J – Sulfur Storage Tank (39FB1001) and Sulfur Loading Arm Vent Streams at C-Train Sulfur Recovery Unit (SRU) as Fuel Gases; Valero Refining-Texas, L.P., Houston Refinery (Valero Houston), located in Houston, Texas; Consent Decree No. SA-05-CA-0569 (Valero CD)

Dear Mr. Abshire:

This letter is in response to an AMP request from Clayton Falcon of Valero Houston, dated November 19, 2007, concerning Sulfur Storage Tank (39FB1001) and Sulfur Loading Arm vent gas streams at the C-Train SRU under 40 CFR 60 Subpart J (NSPS Subpart J). The Environmental Protection Agency (EPA) has evaluated your request and finds that your AMP request is not necessary.

Specifically, the preamble discussions to the proposed and final amendment of Subpart J, effective June 24, 2008 (72 Federal Register 27180 and 73 Federal Register 35840 respectively) clarify that sulfur pits are part of the Claus sulfur recovery plant (SRP). Valero has documented that the Sulfur Loading Arm vent stream is routed to the Sulfur Storage Tank (39FB1001); that Sulfur Storage Tank (39FB1001) functions like a primary sulfur pit where oxidation control occurs within the C-Train SRU; and the resulting vent from the C-Train SRU is then routed to and combusted in the 39CB2001 Tail Gas Incinerator (TGI). Also, the TGI has a continuous monitoring system that demonstrates compliance with the emissions standard of 250 ppm by volume of sulfur dioxide (dry basis) at zero percent excess air, in accordance with 40 CFR 60.104(a)(2) and 60.105(a)(5). Therefore, NSPS Subpart J requirements are being met for the fuel gas stream and an AMP is not necessary.

If you have any questions or concerns about this determination, please feel free to contact Daniel Hoyt of my staff at (214) 665-7326.

Sincerely,

David F. Garcia
Associate Director
Air/Toxics Inspection
And Coordination Branch

cc: Michael De La Cruz (Texas Commission on Environmental Quality)
Salal Tahari (Texas Commission on Environmental Quality)
Arturo J. Blanco (Houston Department of Health and Human Services)
Michael Schaffer (Harris County Public Health Services)

AI/AI/RA
110000 460 885

UNITED STATES ENVIRONMENTAL PROTECTION AGENCY
REGION 6
1445 ROSS AVENUE, SUITE 1200
DALLAS TX 75202-2733

February 21, 2012

Mr. Christopher Abshire
Manager, Environmental Engineering
Valero Refining-Texas, L.P.
Houston Refinery
Post Office Box 5038
Houston, TX 77262-5038

RE: Alternative Monitoring Plan (AMP) – New Source Performance Standards (NSPS) Part 60 Subpart J – Sulfur Pit (46AD6202) and Sulfur Loading Arm (46LO6201) Vent Streams at B-Train Sulfur Recovery Unit (SRU) Combusted as Fuel Gases; Valero Refining-Texas, L.P., Houston Refinery (Valero Houston), located in Houston, Texas; Consent Decree No. SA-05-CA-0569 (Valero CD).

Dear Mr. Abshire:

This letter is in response to the AMP request from Clayton Falcon of Valero Houston, dated November 19, 2007, concerning Sulfur Pit (46AD6202) and Sulfur Loading Arm (46LO6201) vent gas streams at the B-Train SRU under 40 CFR Subpart J (NSPS Subpart J). The Environmental Protection Agency (EPA) has evaluated your request and finds that your AMP request is not necessary.

Specifically, the preamble discussions to the proposed and final amendment of Subpart J, effective June 24, 2008 (72 Federal Register 27180 and 73 Federal Register 35840 respectively) clarify that sulfur pits are part of the Claus sulfur recovery plant (SRP). Valero has documented that the Sulfur Loading Arm (46LO6201) vents to the Sulfur Pit (46AD6202) where oxidation control occurs within the B-Train SRU. The resulting vent from the B-Train SRU is then routed to the 46CB6301 Tail Gas Incinerator (TGI). The TGI has a continuous monitoring system that demonstrates compliance with the emissions standard of 250 ppm by volume of sulfur dioxide (dry basis) at zero percent excess air, in accordance with 40 CFR 60.104(a)(2) and 60.105(a)(5). Therefore, NSPS Subpart J requirements are being met for the fuel gas stream and an AMP is not necessary.

If you have any questions or concerns about this determination, please feel free to contact Daniel Hoyt of my staff at (214) 665-7326.

Sincerely,

David F. Garcia
Associate Director
Air/Toxics Inspection
And Coordination Branch

cc: Michael De La Cruz (Texas Commission on Environmental Quality)
Salal Tahari (Texas Commission on Environmental Quality)
Arturo J. Blanco (Houston Department of Health and Human Services)
Michael Schaffer (Harris County Public Health Services)

AI/AYCO 1/1 00460885

RECEIVE

FEB 24 2012

Air/Toxics & Inspection
Coordination Branch
6EN-A

VALERO

Certified Mail No. 7007 1490 0000 5608 7105

February 22, 2012

Mr. Mark Vickery
Executive Director
TCEQ
P.O. Box 13087
Austin, Texas 78711-3087

Re: External Floating Roof Tank Secondary Seal Gap Measurement Reports – Tank 90FB225
Valero Refining-Texas, L.P. (Valero)
Houston Refinery, Harris County
TCEQ Account No. HG-0130-C; Federal Operating Permit No. O-01381
TCEQ Customer No. CN600127468 ; TCEQ Regulated Entity No. RN100219310

Dear Mr. Vickery:

Valero hereby provides the results of the external floating roof seal gap measurement for tank 90FB225 as required under 40 CFR §60.115b(b)(2) and 40 CFR §63.122(e)(1). This letter also serves to satisfy failed seal gap notification in accordance with §60.115b(b)(4).

The secondary seal gap measurement was performed for Tank 90FB225 on January 24, 2012. The inspection detected rips on the secondary seal as described by §40 CFR 60.113b (b)(4)(ii)(C). As described in the attached table, repairs were made to the damaged secondary seal on February 8, 2012.

Please note that Tank 90FB225 is affected by the provisions of 40 CFR 60, Subpart Kb, 40 CFR 63, Subpart CC, and 30 TAC 115.

If you have any questions, please contact me at (713) 923-3345.

Sincerely,

Preethi Christina Joseph
Senior Environmental Engineer

Enclosure

cc: Mr. David Garcia, Director, Air, Pesticides, and Toxics Division, U.S. EPA, Dallas, TX
Certified Mail No. 7007 1490 0002 5608 7112 (In Duplicate)

Ms. Linda Vasse, Regional Director, TCEQ Region 12, Houston, TX
Certified Mail No. 7007 1490 0002 5608 7129

Mr. Arturo Blanco, Pollution Chief, BAQC – City of Houston, Houston, TX
Certified Mail No. 7007 1490 0002 5608 7136

Mr. Michael Shaffer, Director, Pollution Control Division, HCPCD, Pasadena, TX
Certified Mail No. 7007 1490 0002 5608 7143

Seal Gap Measurement Report

§ 60.115b(b)(4) and § 63.122(e)(1)

Tank ID	Date of Measurement	Raw Data and Calculations	Date the Vessel was or will be Emptied	Repairs	Date of Repair
90FB225	01/24/2012	NA	Repairs did not require the vessel to be emptied.	Repairs to the secondary seal fabric by applying 20 ml. urethane patches.	February 8, 2012

bcc: HS&E Library Files: AI-11-01 (NSPS Subpart Kb) & (MACT Subpart CC), AI-11-02 (Chapter 115), AI-16-03 (Notifications-Tanks)

Chris Abshire
Chip Gross
Randy Rice

ACR-116
Valero Refining – Texas, L.P.; Houston Refinery
EFR - Seal Gap Measurement of Secondary Seals

Inspector Shaun White Tank ID 225 Date 1/24/12

Tank Diameter _____

Secondary Seal Rim Mounted? Yes ✓ No ___
Any location where gap exceeds 1/2 inch? Yes ___ No ✓
Accumulated area of seal gaps? _____ in²/ft tank diameter. Less than 1 in²/ft? Yes ___ No ___
Any holes, tears or openings in shoe, seal fabric or seal envelope? Yes ✓ No ___

	Gap (in)	Length (in) or (ft)
A.	_____	1Ft RIP IN SECONDARY SEAL
B.	_____	2Ft RIP IN SECONDARY SEAL
C.	_____	_____
D.	_____	_____
E.	_____	_____
F.	_____	_____

Drawing

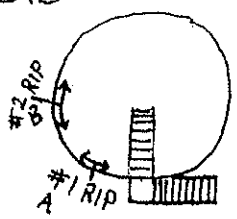

1N

Tank Fitting Criteria – An answer of "No" is a deficiency that must be repaired. It is also a deviation that must be reported to your supervisor.

	Yes	No	N/A
Are all automatic bleeder vents closed?	✓		
Are all rim vents closed?	✓		
Are all roof drains covered with slotted fabric covering >90% of opening?	✓		
Do all openings have a below-liquid projection or covered (except rim vents and bleeder vents).	✓		

1. Wherever the seal gap is 1/8 in or more, measure the gap and circumferential distance and show location of gap on drawing. Calculate seal gap measurements by summing the product of the gap and length for each gap (corrected to square inches) and divide by tank diameter.

2. For secondary seal gaps greater than or equal to 1/8" where the accumulated area of such gaps is greater than 1.0 square inch per foot of tank diameter, the excess emission calculation in 30 TAC §115.116(a)(2) must be calculated and reported on the TCEQ Emissions Inventory. Use Table 3-6a to perform and document this calculation.

3. For tanks that have deficiencies or seal gaps greater than the applicable standard, the following actions must be taken:
   - Complete a First Report of Incident. The deficiency must be repaired or the tank must be taken out of service within a) 30 days for NSPS QQQ tanks, b) 45 days for NSPS Kb and MACT CC tanks, c) 60 days for TCEQ Reg. V tanks, or
   - If the above steps cannot be taken, an extension may apply if the repair involves emptying the tank and no additional storage is available. Two-30 day extensions are available for TCEQ Reg. V and MACT CC tanks, one extension is available for NSPS Kb tanks. No extension is available for NSPS QQQ tanks.
   - If a corrective action is needed or if a repair extension is needed, this information can be included in the next MACT CC semi-annual report.

A4/A4/CO

110000460885

T885

V24

RECEIVE

AUG -3 2012

Air/Toxics & Inspection Coordination Branch 6EN-A

VALERO

CERTIFIED MAIL 7007 2680 0000 4912 3560

July 30, 2012

Director, Compliance Assurance and Enforcement Division
U.S. EPA Region 6
1445 Ross Avenue, Suite 1200
Dallas, Texas 75202

Re: ***Semi-Annual Compliance Reports***
January 1, 2012 through June 30, 2012
NSPS Subpart A CEMS Reports
NSPS Subpart Db Reports
NSPS Subpart J Reports
MACT Subpart UUU Reports
30 TAC Chapter 117 Monitoring System Reports
NSR Permit Reports
TCEQ Account No. HG-0130-C
Operating Permit No. O1381
Regulated Entity No. RN100219310
Valero Refining – Texas, L.P., Houston Refinery

Dear Sir or Madam:

Valero Refining– Texas, L.P. (Valero) operates a petroleum refinery located at 9701 Manchester Street, in Houston, Texas. This petroleum refinery is subject to the requirements found at 40 Code of Federal Regulations (CFR) Part 60 (New Source Performance Standards [NSPS]), Subparts A, Db, J, as well as Part 63 (National Emission Standards for Hazardous Air Pollutants for Source Categories (NESHAPs) - Maximum Achievable Control Technology (MACT) Standards), Subpart UUU. In addition to these requirements, the Refinery is subject to 30 Texas Administrative Code (TAC) Chapter 117 and New Source Review (NSR) permit requirements.

As required by these regulations, Valero submits the attached semi-annual reports for the reporting period beginning January 1, 2012 and ending June 30, 2012. A Certification by Responsible Official (OP-CRO1 Form), certifying the information contained in the semi-annual reports is included in Appendix A of this submittal.

NSPS Subpart A, Excess Emissions and Summary CEMS Reports
The sources presented in the table below are subject to various 40 CFR Part 60 Subparts. As such, these sources must be equipped with a Continuous Emissions Monitoring System (CEMS) and the reporting provisions at 40 CFR §60.7(c) and 40 CFR §60.7(d) must be followed.

Equipment Name	Emission Point Number (EPN)	Applicable NSPS Subpart
Fluid Catalytic Cracking Unit (FCCU)	42CB2201	J
Package Boiler No. 1	81BF01	Db
Package Boiler No. 2	50BF02	Db
Package Boiler No. 3	50BF03	Db
Refinery Fuel Gas System	N/A	J
Sulfur Recovery Unit (SRU) B Train TGI	46CB6301	J
Sulfur Recovery Unit (SRU) C Train TGI	39CB2001	J

Pursuant to 40 CFR §60.7(c) and 40 CFR §60.7(d), dates of monitor downtime and excess emissions are attached as Appendix B. For the units subject to NSPS Subpart Db, the periods of excess emissions are any calculated 30-day rolling average of NO_X emission rates that exceed the NO_X emission limit at 40 CFR §60.44b(l)(1).

For the units subject to NSPS Subpart J, the periods of excess emissions are determined as specified at 40 CFR §60.105(e) for the following CEMS: FCCU CO CEMS [40 CFR 60.105(e)(2)], Refinery Fuel Gas System H_2S CEMS [40 CFR 60.105(e)(3)(ii)], and Sulfur Recovery Units SO_2 CEMS [40 CFR 60.105(e)(4)(i)].

Please note that both the summary report and the excess emission report are submitted only for those units that experienced duration of excess emissions greater than 1% of the reporting period operating time or CEMS downtime greater than 5% of the reporting period operating time.

No analyzers experienced a greater than 5% monitor downtime during the reporting period. Please note that since the last reporting period there were no changes in the Continuous Monitoring Systems, process, or controls.

NSPS Subpart Db Reports

The sources presented in the table below are subject to 40 CFR Part 60 Subpart Db.

Equipment Name	Emission Point Number (EPN)
Package Boiler No. 1	81BF01
Package Boiler No. 2	50BF02
Package Boiler No. 3	50BF03

Per 40 CFR §60.49b(i), since the package boilers have to be monitored continuously for NO_X as required by 40 CFR §60.48b(b)(1), the semi-annual reports should contain the information listed at 40 CFR §60.49b(g), as detailed below:

40 CFR §60.49b(g)(1)
The calendar date is shown on Form OP-CRO1.

40 CFR §60.49b(g)(2)
The average hourly NO_X emission rates (lb/MMBtu heat input) measured is shown for each package boiler in Appendix C.

40 CFR §60.49b(g)(3)
The 30-day average NO_X emission rates (lb/MMBtu heat input) calculated at the end of each operating day, as the average of the measured hourly nitrogen oxide emission rates for the preceding 30 operating days, is shown in Appendix C for each package boiler.

40 CFR §60.49b(g)(4)
There were no operating days during the reporting period when the calculated 30-day average NO_X emission rates were in excess of the 0.2 lb/MMBtu NO_X emission standard at 40 CFR §60.44b(l)(1).

40 CFR §60.49b(g)(5)
The operating days in the reporting period for which NO_X data has not been obtained correspond to the analyzer downtime and are identified in Appendix C for each package boiler. The reasons for not obtaining data and a description of corrective actions taken are provided for each instance of analyzer downtime.

40 CFR §60.49b(g)(6)
For each package boiler, the times when emission data has been excluded from the calculation of average emission rates and the reasons for excluding data are presented in Appendix C.

40 CFR §60.49b(g)(7)
The "F" factor used for calculations, the method of determination (Method 19), and type of fuel combusted (refinery fuel gas, which may contain natural gas) is specified for each boiler. The average "F" factor measured during the reporting period was 9,937 dscf/MMBtu. No new types of fuel have been fired in the boilers.

40 CFR §60.49b(g)(8)
There were no instances in the reporting period when the NO_X concentration exceeded 500 ppm, the full span of the CEMS;

40 CFR §60.49b(g)(9)
No CEMS modifications that could affect the ability of the CEMS to comply with Performance Specification 2 occurred in the reporting period.

40 CFR §60.49b(g)(10)
The results of daily CEMS drift tests are included in Appendix C, for each boiler. The quarterly Cylinder Gas Audits, as required under Appendix F, Procedure 1, are included in Appendix F.

NSPS Subpart J Reports

The sources presented in the table below are subject to 40 CFR Part 60, Subpart J.

Equipment Name	Emission Point Number (EPN)
Fluid Catalytic Cracking Unit (FCCU)	42CB2201
Refinery Fuel Gas System	N/A
Sulfur Recovery Unit (SRU) B Train TGI	46CB6301
Sulfur Recovery Unit (SRU) C Train TGI	39CB2001

Please note that as required by Valero's global consent decree (Civil Action No. SA-05-CA-0569), on 11/23/2006 a wet gas scrubber was installed on the FCCU Regenerator stack. The condensation of stack gas moisture interferes with accurate measurement of opacity by the continuous opacity monitoring system (COMS) required by 40 CFR §60.105(a)(1). As such, Valero uses three (3) operating parameters in lieu of opacity monitoring:

- Water pressure across the filtering modules;
- Flue gas pressure drop across the filtering modules; and,
- Water pressure to the scrubber tower.

On October 4, 2005, Valero submitted an alternative monitoring plan, per 40 CFR §60.13(i), followed by a subsequent submittal on April 14, 2008.

The semi-annual report for sources subject to 40 CFR Part 60, Subpart J includes the following information:

40 CFR §60.105(e)

This requirement defines the periods of excess emissions for FCCU CO [40 CFR §60.105(e)(2)], Refinery Fuel Gas System H_2S CEMS [40 CFR §60.105(e)(3)(ii)], and Sulfur Recovery Units SO_2 CEMS [40 CFR §60.105(e)(4)(i)]. The periods of excess emissions for these units are included in Appendix B.

40 CFR §60.107(c)(1)

40 CFR §60.107(c)(1)(i)

There were no 7-day periods in the reporting period during which the average concentration of SO_2 on a dry and O_2-free basis in the gases discharged from the FCCU was above 50 ppmv, as measured by the CEMS.

40 CFR §60.107(c)(1)(ii)

These provisions do not apply, because the FCCU is equipped with a control device, thus the compliance option at 40 CFR §60.104(b)(2) is not used.

40 CFR §60.107(c)(1)(iii)

These provisions do not apply, because the FCCU is equipped with a control device, thus the compliance option at 40 CFR §60.104(b)(3) is not used.

40 CFR §60.107(c)(2)
There were no 30-day periods in the reporting period with less than 22 valid days [valid day is defined at 40 CFR §60.101(q)].

40 CFR §60.107(c)(3)
There were no 7-day periods in the reporting period during which the average concentration of SO_2 on a dry and O_2-free basis in the gases discharged from the FCCU was above 50 ppmv, as measured by the CEMS.

40 CFR §60.107(c)(4)
40 CFR §60.107(c)(4)(i)
These provisions do not apply, since the data is obtained at the outlet of the CEMS.
40 CFR §60.107(c)(4)(ii)
All days in the reporting period were valid days, as defined at 40 CFR §60.101(q).
40 CFR §60.107(c)(4)(iii)
There were no times during the reporting period when the hourly averages were obtained based on manual sampling.
40 CFR §60.107(c)(4)(iv)
There were no times during the reporting period when SO_2 pollutant concentration exceeded the CEMS span of 250 ppm.
40 CFR §60.107(c)(4)(v)
During the reporting period there were no modifications to the CEMS that could affect the ability of the CEMS to comply with Performance Specification 2.
40 CFR §60.107(c)(4)(vi)
The results of the SO_2 daily drift tests are included in Appendix D. The quarterly accuracy assessments are included in Appendix F.

40 CFR §60.107(c)(5)
These provisions do not apply, because the FCCU is equipped with a control device, thus the compliance option at 40 CFR §60.104(b)(2) is not used.

40 CFR §60.107(c)(6)
These provisions do not apply, because the FCCU is equipped with a control device, thus the compliance option at 40 CFR §60.104(b)(3) is not used.

40 CFR §60.107(d)
The periods for which SO_2 emission data was not available are presented in table 1st Half of 2012 FCCU SO_2 Analyzer Downtime Summary located in Appendix B. During the data unavailability periods, no changes were made in the operation of the emission control system which could affect the ability of the system to meet the applicable emission limit. There were no differences in the operations of the control systems among periods of data unavailability, periods before data unavailability, and periods following data unavailability.

MACT UUU Reports

The sources presented in the table below is subject to 40 CFR Part 63, Subpart UUU reporting requirements at 40 CFR §63.1575.

Equipment Name	Emission Point Number (EPN)
Fluid Catalytic Cracking Unit (FCCU)	42CB2201
Sulfur Recovery Unit (SRU) B Train TGI	46CB6301
Sulfur Recovery Unit (SRU) C Train TGI	39CB2001

At no time during the period was the flue gas from the SRU Tail Gas or from the catalytic cracking unit regenerator bypassed to atmosphere or any alternative control device.

The semi-annual report includes the following information:

40 CFR §63.1575(c)
63.1575(c)(1)
The company name and address in included on Form OP-CRO1.
40 CFR §63.1575(c)(2)
The responsible official statement is included on Form OP-CRO1.
40 CFR §63.1575(c)(3)
The semi-annual report if for the period of January 1, 2012 to June 30, 2012.
40 CFR §63.1575(c)(4)
These provisions do not apply.

40 CFR §63.1575(d)
40 CFR §63.1575(d)(1)
The total operating times for the sources listed in the table above are included in Appendix D.
40 CFR §63.1575(d)(2)
The number, duration, cause of deviations and the corrective actions taken are included in Appendix D.
40 CFR §63.1575(d)(3)
Information on the number, duration, and cause for monitor downtime incidents are included in Appendix D.

40 CFR §63.1575(f)
40 CFR §63.1575(f)(1)
There were no performance tests, as defined at 40 CFR §63.2, conducted in the reporting period.
40 CFR §63.1575(f)(2)
Valero does not request any changes in the applicability of any emission standards.

40 CFR §63.1575(h)
40 CFR §63.1575(h)(1)
The actions taken to respond to MACT UUU exceedances were consistent with the Startup, Shutdown, and Malfunction Plan. As such, these events are not reported in the semiannual

compliance report and the reporting requirements in 40 CFR §63.6(e)(3)(iii) and 40 CFR §63.10(d)(5) do not apply.
40 CFR §63.1575(h)(2)
These provisions do not apply, because all actions taken to respond to MACT UUU exceedances were consistent with the Startup, Shutdown, and Malfunction Plan.

Since Valero complies with NSPS Subpart J to meet the requirements for FCCU and SRUs, the reports required by NSPS are used to ensure compliance with the MACT UUU reporting requirements.

30 TAC Chapter 117 Monitoring System Reports
The sources presented in the table below are subject to the reporting provisions of 30 TAC §117.345(d).

Equipment Name	Emission Point Number (EPN)
Crude Unit Atmospheric Tower Furnace	23BC201
Fluid Catalytic Cracking Unit (FCCU)	42CB2201
Package Boiler No. 1	81BF01
Package Boiler No. 2	50BF02
Package Boiler No. 3	50BF03

Since Valero is part of the Mass Emission Cap and Trade Program, no longer subject to 30 TAC §117.305 (related to Emission Specifications for Reasonably Available Control Technology), the semi-annual report is a monitoring system report that includes the information at 30 TAC §117.345(d)(3). The date and time indentifying each period that the continuous monitoring system was inoperative in presented in Appendix B.

NSR Permit Reports
The sources subject to various NSR Permit reporting requirements are listed in the table below.

Equipment Name	Emission Point Number (EPN)	Permit No.	Reporting Requirement (Special Condition No.)
Crude Unit Atmospheric Tower Furnace	23BC201	48982	16
Fluid Catalytic Cracking Unit (FCCU)	42CB2201	2501A	22.A
Package Boiler No. 1	81BF01	19637	15.A; 24
Package Boiler No. 2	50BF02	19637	15.A; 24
Package Boiler No. 3	50BF03	19637	15.A; 24
Sulfur Recovery Unit (SRU) B Train TGI	46CB6301	2507A	13.A, 13.B(1)
Sulfur Recovery Unit (SRU) C Train TGI	39CB2001	2507A	13.A, 13.B(1)

Permit No. 48982
Special Condition No. 16 of this permit requires EPN 23BC201 be equipped with the NO_X CEMS. This Special Condition references the NSPS Appendix B, Performance Specification 2, Section 8.5, and Appendix F, Procedure 1, Section 7. The information required is presented in Appendix E.

Permit No. 2501A
Special Condition No. 22.A of this permit specifies that for EPN 42CB2201, the CEMS must meet the applicable reporting requirements in 40 CFR Part 60, Appendix B. The FCCU CEMS is subject to Performance Specification 2 (SO_2 and NO_X), Performance Specification 3 (O_2), and Performance Specification 4 (CO). Only the Performance Specification 2 has reporting requirements, and those reports are included in Appendix E.

Permit No. 19637
Special Condition Nos. 15.A and 24 require semi-annual reports as described in 40 CFR §60.7 for Package Boilers NO_X, CO, and O_2 CEMS. These reports are presented in Appendix E.

Permit No. 2507A
Special Condition No. 13 of this permit references the NSPS Appendix B, Performance Specification 2 and NSPS Appendix F, Procedure 1 reporting requirements. The information required is presented in Appendix E.

Should you have any questions or need additional information, please contact me at (713) 924-1524.

Sincerely,
VALERO REFINING - TEXAS, L.P.

Christopher Abshire
Manager Environmental Engineering
Attachments

Cc: Executive Director, TCEQ Austin 7007 2680 0000 4912 3582
Air Section Manager, TCEQ Region 12, 7007 2680 0000 4912 3599
Bureau Chief of Air Quality Control, City of Houston 7007 2680 0000 4912 3605
Director, Harris County Public Health and Environmental Services, Pasadena 7007 2680 0000 4912 3612

Appendix A
OP-CR01
Responsible Official Certification

Form OP-CRO1
Certification by Responsible Official
Federal Operating Permit Program

All initial permit application, revision, renewal, and reopening submittals requiring certification must be addressed using this form. Updates to site operating permit (SOP) and temporary operating permit (TOP) applications, other than public notice verification materials, must be certified prior to authorization of public notice or start of public announcement. Updates to general operating permit (GOP) applications must be certified prior to receiving an authorization to operate under a GOP.

I. IDENTIFYING INFORMATION

A. RN: 100219310	B. CN: 600127468	C. Account No.: HG-0130-C
D. Permit No.: O1381	E. Project No.:	
F. Area Name: Valero Houston Refinery		
G. Company Name: Valero Refining - Texas, L.P.		

II. CERTIFICATION TYPE *(Please mark the appropriate box)*

A. ☑ Responsible Official: B. ☐ Duly Authorized Representative:

III. SUBMITTAL TYPE *(Place an "X" in the appropriate box) (Only one response can be accepted per form)*

☐ SOP/TOP Initial Permit Application	☐ Update to Permit Application
☐ GOP Initial Permit Application	☐ Permit Revision, Renewal, or Reopening
☑ Other: Semi-annual Reports	

IV. CERTIFICATION OF TRUTH

This certification does not extend to information which is designated by the TCEQ as information for reference only.

I, Robert E. Moore, certify that I am the RO for this application
(Certifier Name printed or typed) *(RO or DAR)*

and that, based on information and belief formed after reasonable inquiry, the statements and information dated during the time period in Section IV.A below, or on the specific date(s) in Section IV.B below, are true, accurate, and complete:

Note: Enter EITHER a Time Period OR Specific Date(s) for each certification. This section must be completed. The certification is not valid without documentation date(s).

A. Time Period: From _____ to _____
*Start Date** *End Date**

OR

B. Specific Dates: 07/30/2012 _____ _____ _____ _____ _____ _____ _____
*Date 1** *Date 2** *Date 3** *Date 4** *Date 5** *Date 6** *Date 7** *Date 8**

**The Time Period option may only be used when the "Submittal Type" is 'Update to Permit Application' and there are multiple uncertified submittals; or a submittal package has multiple dates recorded in the documentation. Do not use the Time Period option if the "Submittal Type" is 'Other.'*

Signature: _____ Signature Date: 7/30/12

Title: Vice-President and General Manager

Appendix B

40 CFR §60.7 CEMS Summary Reports

30 TAC Chapter 117 Monitoring System Reports

40 CFR §60.7 CEMS Summary Reports

1st Half of 2012 FCCU CO Analyzer Summary Report

POLLUTANT CO **EMISSION POINT NUMBER:** 42CB2201

REPORTING PERIOD DATES **From:** 1/1/2012 **To:** 6/30/2012

COMPANY:	Valero Refining - Texas, L.P. 9701 Manchester Street Houston, Texas 77012
UNIT ID:	42CB2201
PROCESS UNIT:	Fluidized Catalytic Cracking Unit
EMISSIONS LIMITATION REQUIRED BY:	NSPS Subpart J/MACT UUU 40 CFR §60.103(a); 40 CFR §60.105(e)(2)
EMISSIONS LIMITATION:	500 ppmvd on a 1-hr average
TYPE OF REQUIREMENT:	Standard
MONITORING REQUIREMENT:	40 CFR §60.105(a)(2)
FREQUENCY:	1 hour
REPORT REQUIRED BY:	40 CFR §60.7(d)
MONITOR MANUFACTURER & MODEL NO:	TECO 48C
DATE OF LAST CEMS CERTIFICATION OR AUDIT:	5/30/2012 CGA
PROCESS UNIT DESCRIPTION	Fluidized Catalytic Cracking Unit Wet Gas Scrubber
OPERATING HOURS IN PERIOD	4,368 hours

EMISSIONS DATA SUMMARY

1. Duration of Excess Emission (hours) in Reporting Period Due To:

	500 ppmvd on a 1-hr average	
a) Startup/Shutdown	0.0	
b) Control Equipment Problems	0.0	
c) Process Problems	0.0	
d) Other Known Causes	1.0	
e) Unknown Causes	0.0	
2. Total Duration of Excess Emissions	1.0	hours
3. Percent Excess Emissions	0.0	%

CEMS PERFORMANCE SUMMARY

1. CEMS Downtime (hours) in Reporting Period Due To:

a) Monitor Equipment Malfunctions	0.0	
b) Non-Monitor Equipment Malfunctions	3.0	
c) Quality Assurance Calibrations	3.0	
d) Other Known Causes	14.0	
e) Unknown Causes	0.0	
2. Total CEMS Downtime	20.0	hours
3. Percent Downtime	0.5	%

The following summary details the magnitude and duration of monitor downtime at the FCCU CO CEMS
1st Semiannual Period of 2012

1st Half of 2012 FCCU CO Analyzer Downtime Summary

Event	Start Date/Time	End Date/Time	Duration, Hrs.	Downtime Description	Corrective Action
1H12-FCC CO-001	1/2/12 8:00 AM	1/2/12 8:15 AM	1.00	Exceeded two times the O2 and SO2 calibration drift.	Calibrated and returned to service.
1H12-FCC CO-002	1/5/12 12:15 PM	1/5/12 2:15 PM	3.00	PLC Failed.	Replaced PLC and re-ran a validation.
1H12-FCC CO-003	1/9/12 7:00 AM	1/9/12 7:45 AM	1.00	Check PLC configuration.	N/A
1H12-FCC CO-004	1/13/12 6:50 AM	1/13/12 7:20 AM	1.00	Exceeded two times the O2 calibration drift.	Calibrate O2.
1H12-FCC CO-005	1/19/12 10:31 AM	1/19/12 10:46 AM	1.00	Check new bottles of O2 and SO2.	Ran gas.
1H12-FCC CO-006	2/6/12 9:03 AM	2/6/12 9:20 AM	1.00	Check new CO/NOx bottle.	Calibrate.
1H12-FCC CO-007	2/9/12 7:12 AM	2/9/12 7:30 AM	1.00	Check new gas bottles.	Calibrate
1H12-FCC CO-008	2/23/12 8:14 AM	2/23/12 8:30 AM	1.00	Exceeded two times the O2 calibration drift.	Re-calibrate.
1H12-FCC CO-009	3/13/12 11:40 AM	3/13/12 1:00 PM	2.00	Preventive Maintenance	Water wash sample line and calibration line; calibrate.
1H12-FCC CO-010	3/19/12 7:03 AM	3/19/12 7:20 AM	1.00	Exceeded two times the O2 calibration drift.	Calibrated the O2 span and re-ran the validation.
1H12-FCC CO-011	3/22/12 8:09 AM	3/22/12 9:30 AM	1.00	CGA	N/A
1H12-FCC CO-012	4/3/12 6:45 AM	4/3/12 6:59 AM	1.00	Exceeded two times the SO2 span.	Re-calibrate.
1H12-FCC CO-013	4/24/12 6:48 AM	4/24/12 7:59 AM	1.00	Exceed two times the NOX calibration span.	Replaced internal NOX pump and calibrate.
1H12-FCC CO-014	5/8/12 10:08 AM	5/8/12 10:50 AM	1.00	Changed O2 bottle.	Re-calibrate.
1H12-FCC CO-015	5/30/12 12:05 PM	5/30/12 1:35 PM	2.00	Performed quarterly CGA.	N/A
1H12-FCC CO-016	6/21/12 12:04 PM	6/21/12 12:26 PM	1.00	New NOX/CO bottle.	Check calibration new bottle.
		Total Hours of Downtime	20.0		
		Total Operating Hours for the Quarter	4,368		
		Period of Exceedences, %	0.5%		

1st Half of 2012 FCCU SO_2 Analyzer Summary Report

POLLUTANT SO_2 **EMISSION POINT NUMBER:** 42CB2201

REPORTING PERIOD DATES **From:** 1/1/2012 **To:** 6/30/2012

COMPANY:	Valero Refining - Texas, L.P. 9701 Manchester Street Houston, Texas 77012
UNIT ID:	42CB2201
PROCESS UNIT:	Fluidized Catalytic Cracking Unit
EMISSIONS LIMITATION REQUIRED BY:	NSPS Subpart J 40 CFR §60.104(b)(1)
EMISSIONS LIMITATION:	50 ppmvd on a 7-day rolling average
TYPE OF REQUIREMENT:	Standard
MONITORING REQUIREMENT:	40 CFR §60.105(a)(9)
FREQUENCY:	7-day rolling average
REPORT REQUIRED BY:	40 CFR §60.7(d)
MONITOR MANUFACTURER & MODEL NO:	CAL. ANALYTICAL ZRE
DATE OF LAST CEMS CERTIFICATION OR AUDIT:	5/30/2012 CGA
PROCESS UNIT DESCRIPTION	Fluidized Catalytic Cracking Unit Wet Gas Scrubber
OPERATING HOURS IN PERIOD	4,368 hours

EMISSIONS DATA SUMMARY

1. Duration of Excess Emission (hours) in Reporting Period Due To:

	50 ppmvd on a 7-day rolling average	
a) Startup/Shutdown	0.0	
b) Control Equipment Problems	0.0	
c) Process Problems	0.0	
d) Other Known Causes	0.0	
e) Unknown Causes	0.0	
2. Total Duration of Excess Emissions	0.0	hours
3. Percent Excess Emissions	0.0	%

CEMS PERFORMANCE SUMMARY

1. CEMS Downtime (hours) in Reporting Period Due To:

a) Monitor Equipment Malfunctions	0.0	
b) Non-Monitor Equipment Malfunctions	3.0	
c) Quality Assurance Calibrations	3.0	
d) Other Known Causes	14.0	
e) Unknown Causes	0.0	
2. Total CEMS Downtime	20.0	hours
3. Percent Downtime	0.5	%

The following summary details the magnitude and duration of monitor downtime at the FCCU SO_2 CEMS
1st Semiannual Period of 2012

1st Half of 2012 FCCU SO_2 Analyzer Downtime Summary

Event	Start Date/Time	End Date/Time	Duration, Hrs.	Downtime Description	Corrective Action
1H12-FCC SO2-017	1/2/12 8:00 AM	1/2/12 8:15 AM	1.00	Exceeded two times the O2 and SO2 calibration drift.	Calibrated and returned to service.
1H12-FCC SO2-018	1/5/12 12:15 PM	1/5/12 2:15 PM	3.00	PLC Failed.	Replaced PLC and re-ran a validation.
1H12-FCC SO2-019	01/09/2012 07:00 AM	01/09/2012 12:00 AM	1.00	Re-calibrate zero.	N/A
1H12-FCC SO2-020	1/13/12 6:50 AM	1/13/12 7:20 AM	1.00	Exceeded two times the O2 calibration drift.	Calibrate O2.
1H12-FCC SO2-021	1/19/12 10:31 AM	1/19/12 10:46 AM	1.00	Check new bottles of O2 and SO2.	Ran gas.
1H12-FCC SO2-022	2/6/12 9:03 AM	2/6/12 9:20 AM	1.00	Check new CO/NOx bottle.	Calibrate.
1H12-FCC SO2-023	2/9/12 7:12 AM	2/9/12 7:30 AM	1.00	Check new gas bottles.	Calibrate
1H12-FCC SO2-024	2/23/12 8:14 AM	2/23/12 8:30 AM	1.00	Exceeded two times the O2 calibration drift.	Re-calibrate.
1H12-FCC SO2-025	3/13/12 11:40 AM	3/13/12 1:00 PM	2.00	Preventive Maintenance	Water wash sample line and calibration line; calibrate.
1H12-FCC SO2-026	3/19/12 7:03 AM	3/19/12 7:20 AM	1.00	Exceeded two times the O2 calibration drift.	Calibrated the O2 span and re-ran the validation.
1H12-FCC SO2-027	3/22/12 8:09 AM	3/22/12 9:30 AM	1.00	CGA	N/A
1H12-FCC SO2-028	4/3/12 6:45 AM	4/3/12 6:59 AM	1.00	Exceeded two times the SO2 span.	Re-calibrate.
1H12-FCC SO2-029	4/24/12 6:48 AM	4/24/12 7:59 AM	1.00	Exceed two times the NOX calibration span.	Replaced internal NOX pump and calibrate.
1H12-FCC SO2-030	5/8/12 10:08 AM	5/8/12 10:50 AM	1.00	Exceeded one time the SO2 span.	Re-calibrate.
1H12-FCC SO2-031	5/30/12 12:05 PM	5/30/12 1:35 PM	2.00	Performed quarterly CGA.	N/A
1H12-FCC SO2-032	6/21/12 12:04 PM	6/21/12 12:26 PM	1.00	New NOX/CO bottle.	Check calibration new bottle.
		Total Hours of Downtime	20.0		
		Total Operating Hours for the Quarter	4,368		
		Period of Exceedences, %	0.5%		

1st Half of 2012 Refinery Fuel Gas H2S Analyzer Summary Report

POLLUTANT H_2S **EMISSION POINT NUMBER:** N/A

REPORTING PERIOD DATES **From:** 1/1/2012 **To:** 6/30/2012

COMPANY:	Valero Refining - Texas, L.P. 9701 Manchester Street Houston, Texas 77012
UNIT ID:	N/A
PROCESS UNIT:	Refinery Fuel Gas System
EMISSIONS LIMITATION REQUIRED BY:	NSPS Subpart J 40 CFR §60.104(a)(1); 40 CFR §60.105(e)(3)(ii)
EMISSIONS LIMITATION:	0.1 gr/dscf (162 ppm) on a 3-hour rolling average
TYPE OF REQUIREMENT:	Standard
MONITORING REQUIREMENT:	40 CFR §60.105(a)(4)
FREQUENCY:	3-hour rolling average
REPORT REQUIRED BY:	40 CFR §60.7(d)
MONITOR MANUFACTURER & MODEL NO:	SIEMENS, Maxum II
DATE OF LAST CEMS CERTIFICATION OR AUDIT:	5/30/2012 CGA
PROCESS UNIT DESCRIPTION	Refinery Fuel Gas System
OPERATING HOURS IN PERIOD	4,368 hours

EMISSIONS DATA SUMMARY

1. Duration of Excess Emission (hours) in Reporting Period Due To:

	0.1 gr/dscf (162 ppm) on a 3-hour rolling average
a) Startup/Shutdown	0.0
b) Control Equipment Problems	0.0
c) Process Problems	0.0
d) Other Known Causes	0.0
e) Unknown Causes	0.0

2. Total Duration of Excess Emissions 0.0 hours

3. Percent Excess Emissions 0.0 %

CEMS PERFORMANCE SUMMARY

1. CEMS Downtime (hours) in Reporting Period Due To:

a) Monitor Equipment Malfunctions	0.0
b) Non-Monitor Equipment Malfunctions	0.0
c) Quality Assurance Calibrations	3.0
d) Other Known Causes	0.0
e) Unknown Causes	0.0

2. Total CEMS Downtime 3.0 hours

3. Percent Downtime 0.1 %

The following summary details the magnitude and duration of monitor downtime at the Fuel Gas H_2S CEMS
1st Half of 2012

1st Half of 2012 Fuel Gas H_2S Analyzer Downtime Summary

Event	Start Date/Time	End Date/Time	Duration, Hrs.	Downtime Description	Corrective Action
1H12-FG H2S-001	3/23/12 6:26 AM	3/23/12 7:43 AM	2.0	Quarterly CGA	N/A
1H12-FG H2S-002	5/30/12 8:00 AM	5/30/12 9:00 AM	1.0	Performed quarterly CGA.	N/A
		Total Hours of Downtime	3.0		
		Total Operating Hours for the Quarter	4,368		
		Period of Exceedences, %	0.1%		

1st Half of 2012 SRU Unit 46 SO_2 Analyzer Summary Report

POLLUTANT SO_2 **EMISSION POINT NUMBER:** 46CB6301

REPORTING PERIOD DATES **From:** 1/1/2012 **To:** 6/30/2012

COMPANY:	Valero Refining - Texas, L.P. 9701 Manchester Street Houston, Texas 77012
UNIT ID:	46CB6301
PROCESS UNIT:	Tail Gas Incinerator Unit 46 SRU
EMISSIONS LIMITATION REQUIRED BY:	NSPS Subpart J/MACT UUU 40 CFR §60.104(a)(2)(i); 40 CFR §60.105(e)(4)(i)
EMISSIONS LIMITATION:	250 ppm on a 12-hour rolling average
TYPE OF REQUIREMENT:	Standard
MONITORING REQUIREMENT:	40 CFR §60.105(a)(5)
FREQUENCY:	12-hour rolling average
REPORT REQUIRED BY:	40 CFR §60.7(c) and 40 CFR §60.7(d)
MONITOR MANUFACTURER & MODEL NO:	AMETEK, 921
DATE OF LAST CEMS CERTIFICATION OR AUDIT:	5/31/2012 CGA
PROCESS UNIT DESCRIPTION	Sulfur recovery unit tail gas incinerator
OPERATING HOURS IN PERIOD	4,368 hours

EMISSIONS DATA SUMMARY

1. Duration of Excess Emission (hours) in Reporting Period Due To:

	250 ppm on a 12-hour rolling average
a) Startup/Shutdown	0.0
b) Control Equipment Problems	0.0
c) Process Problems	0.0
d) Other Known Causes	55.0
e) Unknown Causes	0.0

2. Total Duration of Excess Emissions 55.0 hours

3. Percent Excess Emissions 1.3 %

CEMS PERFORMANCE SUMMARY

1. CEMS Downtime (hours) in Reporting Period Due To:

a) Monitor Equipment Malfunctions	3.0
b) Non-Monitor Equipment Malfunctions	3.0
c) Quality Assurance Calibrations	1.0
d) Other Known Causes	35.0
e) Unknown Causes	0.0

2. Total CEMS Downtime 42.0 hours

3. Percent Downtime 1.0 %

The information required by each section of 40 CFR §60.7(c) is detailed below.

40 CFR §60.7(c)(1)

Please refer to the table 2012 1st Half SRU Unit 46 SO_2 Excess Emissions.

40 CFR §60.7(c)(2)

The identification of each period of excees emissions is provided on table 2012 1st Half SRU Unit 46 SO_2 Excess Emissions.

40 CFR §60.7(c)(3)

Please refer to the 1st Half of 2012 SRU Unit 46 SO_2 Analyzer Downtime Summary.

40 CFR §60.7(c)(4)

These provisions are not applicable.

The following summary details the magnitude and duration of excess emissions at the SRU Unit 46 SO_2 CEMS for the 1st half of 2012.

2012 1st Half SRU Unit 46 SO_2 Excess Emissions

Event	Start Date/Time	End Date/Time	Duration, hrs.	Nature of Incident	Corrective Action
1H12-SRU B SO2-001	Mon, 09 Jan 12, 07:00:00 PM	Wed, 11 Jan 12, 07:00:00 PM	49.0	Malfunction RGG shutdown	Instrument techs inspected the valve and found the actuator was in bad order. Initiate actions to remove/replace the actuator.
1H12-SRU B SO2-002	Mon, 11 Jun 12, 12:00:00 AM	Mon, 11 Jun 12, 05:00:00 AM	6.0	Malfunction PTU Line Leak / East Loop Power Failure	Reduced crude rate and contacted maintenance to repair PTU line and restore power to the East Loop.
		Total Hours of Exceedences	55.0		
		Total Operating Hours for the Quarter	4368		
		Period of Exceedences, %	1.26%		

Date/Time	SO_2 Excess Emissions (ppmc, 12-hr rolling average)
Mon, 09 Jan 12, 07:00:00 PM	299.53
Mon, 09 Jan 12, 08:00:00 PM	353.52
Mon, 09 Jan 12, 09:00:00 PM	406.64
Mon, 09 Jan 12, 10:00:00 PM	459.54
Mon, 09 Jan 12, 11:00:00 PM	519.09
Tue, 10 Jan 12, 12:00:00 AM	581.28
Tue, 10 Jan 12, 01:00:00 AM	644.95
Tue, 10 Jan 12, 02:00:00 AM	735.58
Tue, 10 Jan 12, 03:00:00 AM	853.79
Tue, 10 Jan 12, 04:00:00 AM	1019.02
Tue, 10 Jan 12, 05:00:00 AM	1204.39
Tue, 10 Jan 12, 06:00:00 AM	1269.23
Tue, 10 Jan 12, 07:00:00 AM	1264.55
Tue, 10 Jan 12, 08:00:00 AM	1262.58
Tue, 10 Jan 12, 09:00:00 AM	1260.88
Tue, 10 Jan 12, 10:00:00 AM	1265.79
Tue, 10 Jan 12, 11:00:00 AM	1257.59
Tue, 10 Jan 12, 12:00:00 PM	1247.28
Tue, 10 Jan 12, 01:00:00 PM	1235.75
Tue, 10 Jan 12, 02:00:00 PM	1209.61
Tue, 10 Jan 12, 03:00:00 PM	1099.84
Tue, 10 Jan 12, 04:00:00 PM	928.52
Tue, 10 Jan 12, 05:00:00 PM	738.63
Tue, 10 Jan 12, 06:00:00 PM	669.27
Tue, 10 Jan 12, 07:00:00 PM	670.28
Tue, 10 Jan 12, 08:00:00 PM	670.14
Tue, 10 Jan 12, 09:00:00 PM	669.94
Tue, 10 Jan 12, 10:00:00 PM	662.50
Tue, 10 Jan 12, 11:00:00 PM	661.81
Wed, 11 Jan 12, 12:00:00 AM	660.79
Wed, 11 Jan 12, 01:00:00 AM	659.56
Wed, 11 Jan 12, 02:00:00 AM	646.15

Wed, 11 Jan 12, 03:00:00 AM	644.91
Wed, 11 Jan 12, 04:00:00 AM	643.65
Wed, 11 Jan 12, 05:00:00 AM	642.57
Wed, 11 Jan 12, 06:00:00 AM	632.48
Wed, 11 Jan 12, 07:00:00 AM	631.59
Wed, 11 Jan 12, 08:00:00 AM	630.87
Wed, 11 Jan 12, 09:00:00 AM	621.94
Wed, 11 Jan 12, 10:00:00 AM	613.71
Wed, 11 Jan 12, 11:00:00 AM	582.80
Wed, 11 Jan 12, 12:00:00 PM	550.69
Wed, 11 Jan 12, 01:00:00 PM	519.55
Wed, 11 Jan 12, 02:00:00 PM	483.18
Wed, 11 Jan 12, 03:00:00 PM	438.20
Wed, 11 Jan 12, 04:00:00 PM	391.90
Wed, 11 Jan 12, 05:00:00 PM	344.76
Wed, 11 Jan 12, 06:00:00 PM	306.38
Wed, 11 Jan 12, 07:00:00 PM	258.19
Mon, 11 Jun 12, 12:00:00 AM	255.41
Mon, 11 Jun 12, 01:00:00 AM	260.26
Mon, 11 Jun 12, 02:00:00 AM	263.72
Mon, 11 Jun 12, 03:00:00 AM	265.13
Mon, 11 Jun 12, 04:00:00 AM	266.55
Mon, 11 Jun 12, 05:00:00 AM	269.80

The following summary details the magnitude and duration of monitor downtime at the SRU Unit 46 SO_2 CEMS.
1st Half of 2012

1st Half of 2012 SRU Unit 46 SO_2 Analyzer Downtime Summary

Event	Start Date/Time	End Date/Time	Duration, Hrs.	Downtime Description	Corrective Action
1H12-SRU B SO2-003	1/1/12 5:45 AM	1/1/12 6:00 AM	1.00	Checked per Operations request.	No issues.
1H12-SRU B SO2-004	1/5/12 7:30 AM	1/5/12 9:30 AM	3.00	Sample chiller failed.	Replaced chiller and re-ran a calibration and validation.
1H12-SRU B SO2-005	1/11/12 12:00 PM	1/11/12 1:00 PM	1.00	Check system per Operations request.	Re-ran a validation.
1H12-SRU B SO2-006	1/25/12 6:30 AM	1/25/12 7:30 AM	2.00	Calibration failure during the morning.	Unplugged the calibration line at the stack filter canister port and re-ran a validation.
1H12-SRU B SO2-007	2/27/12 6:45 AM	2/27/12 9:00 AM	3.00	Sample system was almost liquid full causing exceedance of two times the calibration drift.	Cleaned sample probe assembly, replaced sample pump and filters, dried and cleaned lines.
1H12-SRU B SO2-008	3/2/12 7:15 AM	3/2/12 7:38 AM	1.00	Needed to calibrate the SO2 zero span.	Calibrated the SO2 zero and re-ran a validation.
1H12-SRU B SO2-009	3/16/12 7:56 AM	3/16/12 8:20 AM	1.00	Exceeded two times the O2 calibration drift.	Calibrated the O2 span and re-ran the validation.
1H12-SRU B SO2-010	4/10/12 6:30 AM	4/10/12 7:00 AM	1.00	Exceed one times the O2 span.	Calibrated O2 span and reran the validation.
1H12-SRU B SO2-011	4/16/12 7:30 AM	4/16/12 10:45 AM	4.00	Sample flow switch was plugged.	Cleaned out flow switch and reran a calibration and validation.
1H12-SRU B SO2-012	5/22/12 6:41 AM	5/22/12 7:07 AM	1.00	Exceeded one time the SO2 span.	Calibrated span and re-ran validation.
1H12-SRU B SO2-013	5/31/12 11:55 AM	5/31/12 12:55 PM	1.00	Performed quarterly CGA.	N/A
1H12-SRU B SO2-014	6/2/12 2:45 AM	6/2/12 5:10 AM	3.00	SO2 analyzer failure.	Replaced SO2 analyzer and calibrate.
1H12-SRU B SO2-015	6/4/12 9:30 AM	6/4/12 11:30 AM	3.00	Sample system maintenance.	Cleaned sample system.
1H12-SRU B SO2-016	6/7/12 6:50 AM	6/7/12 10:45 AM	4.00	Sample system plugging, exceeded one time the zero drift span.	Cleaned sample probe canister, repalced sample filter and pump re-ran validation
1H12-SRU B SO2-017	6/11/12 8:45 AM	6/11/12 5:15 PM	10.00	Low flow and exceeded one times the O2 calibration drift during validation.	Cleaned sample system, replaced O2 sensor, repaired leaks inside the analyzer, and re-ran the validation
1H12-SRU B SO2-018	6/13/12 6:55 AM	6/13/12 7:15 AM	1.00	Exceeded four times the O2 calibration drift.	Calibrated analyzer and re-ran the validation.
1H12-SRU B SO2-019	6/26/12 7:00 AM	6/26/12 7:26 AM	1.00	Needed to calibrate SO2 span.	Calibrated SO2 span and re-ran the validation.
1H12-SRU B SO2-020	6/28/12 12:16 PM	6/28/12 12:39 PM	1.00	Needed to calibrate O2 after changing out bottle.	Ran a validation after calibrating O2 analyzer.
		Total Hours of Downtime	42.0		
		Total Operating Hours for the Quarter	4,368		
		Period of Exceedences, %	0.96%		

1st Half of 2012 SRU Unit 46 O_2 Analyzer Summary Report

POLLUTANT O_2 **EMISSION POINT NUMBER:** 46CB6301

REPORTING PERIOD DATES **From:** 1/1/2012 **To:** 6/30/2012

COMPANY:	Valero Refining - Texas, L.P. 9701 Manchester Street Houston, Texas 77012
UNIT ID:	46CB6301
PROCESS UNIT:	Tail Gas Incinerator Unit 46 SRU
EMISSIONS LIMITATION REQUIRED BY:	N/A
EMISSIONS LIMITATION:	N/A
TYPE OF REQUIREMENT:	Standard
MONITORING REQUIREMENT:	40 CFR §60.105(a)(5)
FREQUENCY:	N/A
REPORT REQUIRED BY:	40 CFR §60.7(d)
MONITOR MANUFACTURER & MODEL NO:	THERMOX CEM O2
DATE OF LAST CEMS CERTIFICATION OR AUDIT:	5/31/2012 CGA
PROCESS UNIT DESCRIPTION	Sulfur recovery unit tail gas incinerator
OPERATING HOURS IN PERIOD	4,368 hours

EMISSIONS DATA SUMMARY: N/A

There are no emission limitations for O_2.

CEMS PERFORMANCE SUMMARY

1. CEMS Downtime (hours) in Reporting Period Due To:

a) Monitor Equipment Malfunctions	3.0
b) Non-Monitor Equipment Malfunctions	10.0
c) Quality Assurance Calibrations	1.0
d) Other Known Causes	51.0
e) Unknown Causes	0.0

2. Total CEMS Downtime 65.0 hours

3. Percent Downtime 1.5 %

The following summary details the magnitude and duration of monitor downtime at the SRU Unit 46 O_2 CEMS.
1st Half of 2012

1st Half of 2012 SRU Unit 46 O_2 Analyzer Downtime Summary

Event	Start Date/Time	End Date/Time	Duration, Hrs.	Downtime Description	Corrective Action
1H12-SRU B O2-001	1/1/12 5:45 AM	1/1/12 6:00 AM	1.00	Checked per Operations request.	No issues.
1H12-SRU B O2-002	1/5/12 7:30 AM	1/5/12 9:30 AM	3.00	Sample chiller failed.	Replaced chiller and re-ran a calibration and validation.
1H12-SRU B O2-003	1/11/12 12:00 PM	1/11/12 1:00 PM	1.00	Check system per Operations request.	Re-ran a validation.
1H12-SRU B O2-004	1/25/12 6:30 AM	1/25/12 7:30 AM	2.00	Calibration failure during the morning.	Unplugged the calibration line at the stack filter canister port and re-ran a validation.
1H12-SRU B O2-005	2/27/12 6:45 AM	2/27/12 9:00 AM	3.00	Sample system was almost liquid full causing exceedance of two times the calibration drift.	Cleaned sample probe assembly, replaced sample pump and filters, dried and cleaned lines.
1H12-SRU B O2-006	3/2/12 7:15 AM	3/2/12 7:38 AM	1.00	Needed to calibrate the SO2 zero span.	Calibrated the SO2 zero and re-ran a validation.
1H12-SRU B O2-007	3/16/12 7:56 AM	3/16/12 8:20 AM	1.00	Exceeded two times the O2 calibration drift.	Calibrated the O2 span and re-ran the validation.
1H12-SRU B O2-008	4/10/12 6:30 AM	4/10/12 7:00 AM	1.00	Exceed one times the O2 span.	Calibrated O2 span and reran the validation.
1H12-SRU B O2-009	4/16/12 7:30 AM	4/16/12 10:45 AM	4.00	Sample flow switch was plugged.	Cleaned out flow switch and reran a calibration and validation.
1H12-SRU B O2-010	5/22/12 6:41 AM	5/22/12 7:07 AM	1.00	Exceeded one time the SO2 span.	Calibrated span and re-ran validation.
1H12-SRU B O2-011	5/31/12 11:55 AM	5/31/12 12:55 PM	1.00	Performed quarterly CGA.	N/A
1H12-SRU B O2-012	6/2/12 2:45 AM	6/2/12 5:10 AM	3.00	SO2 analyzer failure.	Replaced SO2 analyzer and calibrate.
1H12-SRU B O2-013	6/4/12 9:30 AM	6/4/12 11:30 AM	3.00	Sample system maintenance.	Cleaned sample system.
1H12-SRU B O2-014	6/7/12 6:50 AM	6/7/12 10:45 AM	4.00	Sample system plugging, exceeded one time the zero drift span.	Cleaned sample probe canister, repalced sample filter and pump re-ran validation
1H12-SRU B O2-015	6/11/12 8:45 AM	6/11/12 5:15 PM	10.00	Low flow and exceeded one times the O2 calibration drift during validation.	Cleaned sample system, replaced O2 sensor, repaired leaks inside the analyzer, and re-ran the validation
1H12-SRU B O2-016	6/12/12 6:55 AM	6/13/12 7:15 AM	24.00	Exceeded four times the O2 calibration drift.	Calibrated analyzer and re-ran the validation.
1H12-SRU B O2-017	6/26/12 7:00 AM	6/26/12 7:26 AM	1.00	Needed to calibrate SO2 span.	Calibrated SO2 span and re-ran the validation.
1H12-SRU B O2-018	6/28/12 12:16 PM	6/28/12 12:39 PM	1.00	Needed to calibrate O2 after changing out bottle.	Ran a validation after calibrating O2 analyzer.
		Total Hours of Downtime	65.0		
		Total Operating Hours for the Quarter	4,368		
		Period of Exceedences, %	1.49%		

1st Half of 2012 SRU Unit 39 SO_2 Analyzer Summary Report

POLLUTANT SO_2 **EMISSION POINT NUMBER:** 39CB2001

REPORTING PERIOD DATES **From:** 1/1/2012 **To:** 6/30/2012

COMPANY:	Valero Refining - Texas, L.P. 9701 Manchester Street Houston, Texas 77012
UNIT ID:	39CB2001
PROCESS UNIT:	Tail Gas Incinerator Unit 39 SRU
EMISSIONS LIMITATION REQUIRED BY:	NSPS Subpart J/MACT UUU 40 CFR §60.104(a)(2)(i); 40 CFR §60.105(e)(4)(i)
EMISSIONS LIMITATION:	250 ppm on a 12-hour rolling average
TYPE OF REQUIREMENT:	Standard
MONITORING REQUIREMENT:	40 CFR §60.105(a)(5)
FREQUENCY:	12-hour rolling average
REPORT REQUIRED BY:	40 CFR §60.7(d)
MONITOR MANUFACTURER & MODEL NO:	AMETEK, 921
DATE OF LAST CEMS CERTIFICATION OR AUDIT:	5/31/2012 CGA
PROCESS UNIT DESCRIPTION	Sulfur recovery unit tail gas incinerator
OPERATING HOURS IN PERIOD	4,368 hours

EMISSIONS DATA SUMMARY

1. Duration of Excess Emission (hours) in Reporting Period Due To:

	250 ppm on a 12-hour rolling average
a) Startup/Shutdown	0.0
b) Control Equipment Problems	0.0
c) Process Problems	0.0
d) Other Known Causes	0.0
e) Unknown Causes	0.0

2. Total Duration of Excess Emissions 0.0 hours

3. Percent Excess Emissions 0.0 %

CEMS PERFORMANCE SUMMARY

1. CEMS Downtime (hours) in Reporting Period Due To:

a) Monitor Equipment Malfunctions	0.0
b) Non-Monitor Equipment Malfunctions	3.0
c) Quality Assurance Calibrations	1.0
d) Other Known Causes	20.0
e) Unknown Causes	0.0

2. Total CEMS Downtime 24.0 hours

3. Percent Downtime 0.5 %

The following summary details the magnitude and duration of monitor downtime at the SRU Unit 39 SO_2 CEMS.
1st Half of 2012

1st Half of 2012 SRU Unit 39 SO_2 Analyzer Downtime Summary

Event	Start Date/Time	End Date/Time	Duration, Hrs.	Downtime Description	Corrective Action
1H12-SRU C SO2-001	1/19/12 8:00 PM	1/19/12 11:00 PM	3.00	Check out system per Operations request.	Replaced sample solenoid inside flow drawer, cleaned out sample probe canister and ran a calibration and validation.
1H12-SRU C SO2-002	2/4/12 6:40 AM	2/4/12 7:15 AM	2.00	Excceeded one times the zero calibration drift.	Re-calibrate.
1H12-SRU C SO2-003	2/9/12 11:00 AM	2/9/2012 13:00:00 AM	2.00	Maintenance on sample probe, filter housing, and sample filter.	Stem cleaned sample probe, filter housing. Replaced probe filter.
1H12-SRU C SO2-004	2/12/12 6:30 AM	2/12/12 7:30 AM	2.00	Exceeded two times the SO2 span.	Re-calibrate.
1H12-SRU C SO2-005	2/12/12 6:15 PM	2/12/12 8:00 PM	2.00	Instrument in maintenance mode.	Fixed jumper bad switch.
1H12-SRU C SO2-006	2/13/12 7:00 AM	2/13/12 9:00 AM	2.00	Faulted sample drawer complete. Bad switches and solenoids.	Replaced sample drawer complete.
1H12-SRU C SO2-007	3/6/12 7:30 AM	3/6/12 7:50 AM	1.00	Exceeded two times the O2 calibration drift.	Re-calibrate.
1H12-SRU C SO2-008	3/10/12 7:15 AM	3/10/12 7:59 AM	1.00	Exceeded two times the O2 calibration drift.	Re-calibrate.
1H12-SRU C SO2-009	3/11/12 11:05 AM	3/11/12 12:15 PM	2.00	Exceeded two times the O2 calibration drift.	Re-calibrate.
1H12-SRU C SO2-010	4/1/12 7:00 AM	4/1/12 7:25 AM	1.00	Exceeded one time the zero span drift during validation.	Calibrate zero span and re-ran the validation.
1H12-SRU C SO2-011	4/4/12 11:00 AM	4/4/12 12:00 PM	1.00	Cleaned and changed sample probe filter per Operations request. No issues were	N/A
1H12-SRU C SO2-012	5/10/12 8:00 AM	5/10/12 9:00 AM	1.00	Obstructed O2 cell tubing and failed sample pump.	Removed obstruction and replaced sample pump.
1H12-SRU C SO2-013	5/31/12 1:10 PM	5/31/12 2:10 PM	1.00	Performed quarterly CGA.	N/A
1H12-SRU C SO2-014	6/12/12 7:00 AM	6/12/12 9:00 AM	2.00	Exceeded two times the SO2 calibration drift due to faulted measurmement lamp.	Replaced lamp and cleaned sample probe and replaced probe filter.
1H12-SRU C SO2-015	6/13/12 7:00 AM	6/13/12 8:00 AM	1.00	Exceeded two times the O2 zero calibration drift.	Adjusted zero span and re-calibrated.
		Total Hours of Downtime	24.00		
		Total Operating Hours for the Quarter	4,368		
		Period of Downtime, %	0.5%		

1st Half of 2012 SRU Unit 39 O_2 Analyzer Summary Report

POLLUTANT O_2 **EMISSION POINT NUMBER:** 39CB2001

REPORTING PERIOD DATES **From:** 1/1/2012 **To:** 6/30/2012

COMPANY:	Valero Refining - Texas, L.P. 9701 Manchester Street Houston, Texas 77012
UNIT ID:	39CB2001
PROCESS UNIT:	Tail Gas Incinerator Unit 39 SRU
EMISSIONS LIMITATION REQUIRED BY:	N/A N/A
EMISSIONS LIMITATION:	N/A
TYPE OF REQUIREMENT:	Standard
MONITORING REQUIREMENT:	40 CFR §60.105(a)(5)
FREQUENCY:	N/A
REPORT REQUIRED BY:	40 CFR §60.7(d)
MONITOR MANUFACTURER & MODEL NO:	THERMOX CEM O2
DATE OF LAST CEMS CERTIFICATION OR AUDIT:	5/31/2012 CGA
PROCESS UNIT DESCRIPTION	Sulfur recovery unit tail gas incinerator
OPERATING HOURS IN PERIOD	4,368 hours

EMISSIONS DATA SUMMARY

There are no emission limitations for O_2.

CEMS PERFORMANCE SUMMARY

1. CEMS Downtime (hours) in Reporting Period Due To:

a) Monitor Equipment Malfunctions	0.0
b) Non-Monitor Equipment Malfunctions	4.0
c) Quality Assurance Calibrations	0.0
d) Other Known Causes	20.0
e) Unknown Causes	0.0

2. Total CEMS Downtime 24.0 hours

3. Percent Downtime 0.5 %

The following summary details the magnitude and duration of monitor downtime at the SRU Unit 39 O_2 CEMS.
1st Half of 2012

1st Half of 2012 SRU Unit 39 O_2 Analyzer Downtime Summary

Event	Start Date/Time	End Date/Time	Duration, Hrs.	Downtime Description	Corrective Action
1H12-SRU C O2-001	1/19/12 8:00 PM	1/19/12 11:00 PM	3.00	Check out system per Operations request.	Replaced sample solenoid inside flow drawer, cleaned out sample probe canister and ran a calibration and validation.
1H12-SRU C O2-002	2/4/12 6:40 AM	2/4/12 7:15 AM	2.00	Excceeded one times the zero calibration drift.	Re-calibrate.
1H12-SRU C O2-003	2/9/12 11:00 AM	2/9/2012 13:00:00 AM	2.00	Maintenance on sample probe, filter housing, and sample filter.	Stem cleaned sample probe, filter housing. Replaced probe filter.
1H12-SRU C O2-004	2/12/12 6:30 AM	2/12/12 7:30 AM	2.00	Exceeded two times the SO2 span.	Re-calibrate.
1H12-SRU C O2-005	2/12/12 6:15 PM	2/12/12 8:00 PM	2.00	Instrument in maintenance mode.	Fixed jumper bad switch.
1H12-SRU C O2-006	2/13/12 7:00 AM	2/13/12 9:00 AM	2.00	Faulted sample drawer complete. Bad switches and solenoids.	Replaced sample drawer complete.
1H12-SRU C O2-007	3/6/12 7:30 AM	3/6/12 7:50 AM	1.00	Exceeded two times the O2 calibration drift.	Re-calibrate.
1H12-SRU C O2-008	3/10/12 7:15 AM	3/10/12 7:59 AM	1.00	Exceeded two times the O2 calibration drift.	Re-calibrate.
1H12-SRU C O2-009	3/11/12 11:05 AM	3/11/12 12:15 PM	2.00	Exceeded two times the O2 calibration drift.	Re-calibrate.
1H12-SRU C O2-010	3/25/12 8:00 AM	3/25/12 9:00 AM	1.00	Faulty sample O2 cell and restricted sample atmospheric vent line.	Replaced sample O2 cell. Removed restriction and calibrated.
1H12-SRU C O2-011	4/1/12 7:00 AM	4/1/12 7:25 AM	1.00	Exceeded one time the zero span drift during validation.	Calibrate zero span and re-ran the validation.
1H12-SRU C O2-012	4/4/12 11:00 AM	4/4/12 12:00 PM	1.00	Cleaned and changed sample probe filter per Operations request. No issues were found.	N/A
1H12-SRU C O2-013	5/10/12 8:00 AM	5/10/12 9:00 AM	1.00	Obstructed O2 cell tubing and failed sample pump.	Removed obstruction and replaced sample pump.
1H12-SRU C O2-014	6/12/12 7:00 AM	6/12/12 9:00 AM	2.00	Exceeded two times the SO2 calibration drift due to faulted measurmement lamp.	Replaced lamp and cleaned sample probe and replaced probe filter.
1H12-SRU C O2-015	6/13/12 7:00 AM	6/13/12 8:00 AM	1.00	Exceeded two times the O2 zero calibration drift.	Adjusted zero span and re-calibrated.
		Total Hours of Downtime	24.00		
		Total Operating Hours for the Quarter	4,368		
		Period of Downtime, %	0.5%		

1st Half of 2012 Package Boiler No. 1 NO_X Analyzer Summary Report

POLLUTANT NO_X **EMISSION POINT NUMBER:** 81BF01

REPORTING PERIOD DATES **From:** 1/1/2012 **To:** 6/30/2012

COMPANY:	Valero Refining - Texas, L.P. 9701 Manchester Street Houston, Texas 77012
UNIT ID:	81BF01
PROCESS UNIT:	Package Boiler No. 1
EMISSIONS LIMITATION REQUIRED BY:	NSPS Subpart Db 40 CFR §60.44b(l)(1); 40 CFR §60.44(b)(i)
EMISSIONS LIMITATION:	0.2 lb/MMBtu on a 30-day rolling average
TYPE OF REQUIREMENT:	Standard
MONITORING REQUIREMENT:	40 CFR §60.48b(b)(1)
FREQUENCY:	30-day rolling average
REPORT REQUIRED BY:	40 CFR §60.7(d)
MONITOR MANUFACTURER & MODEL NO:	TECO 42C LOW SOURCE
DATE OF LAST CEMS CERTIFICATION OR AUDIT:	5/30/2012 CGA
PROCESS UNIT DESCRIPTION	Package Boiler
OPERATING HOURS IN PERIOD	4,268 hours

EMISSIONS DATA SUMMARY

1. Duration of Excess Emission (hours) in Reporting Period Due To:

	0.2 lb/MMBtu on a 30-day rolling average
a) Startup/Shutdown	0.0
b) Control Equipment Problems	0.0
c) Process Problems	0.0
d) Other Known Causes	0.0
e) Unknown Causes	0.0

2. Total Duration of Excess Emissions 0.0 hours

3. Percent Excess Emissions 0.0 %

CEMS PERFORMANCE SUMMARY

1. CEMS Downtime (hours) in Reporting Period Due To:

a) Monitor Equipment Malfunctions	0.0
b) Non-Monitor Equipment Malfunctions	5.0
c) Quality Assurance Calibrations	1.0
d) Other Known Causes	12.0
e) Unknown Causes	0.0

2. Total CEMS Downtime 18.0 hours

3. Percent Downtime 0.4 %

The following summary details the magnitude and duration of monitor downtime at the Package Boiler No. 1 NO_X CEMS.

1st Half of 2012

1st Half of 2012 Package Boiler No. 1 NO_X Analyzer Downtime Summary

Event	Start Date/Time	End Date/Time	Duration, Hrs.	Downtime Description	Corrective Action
1H12-PB1 NOx-001	1/2/12 7:05	1/2/12 7:20	1.00	Exceeded two times the O2 calibration drift.	Calibrated and returned to service.
1H12-PB1 NOx-002	1/13/12 7:35	1/13/12 7:55	1.00	Exceeded two times the O2 calibration drift.	Calibrate O2.
1H12-PB1 NOx-003	2/5/12 7:30	2/5/12 8:30	2.00	Downtime realted to O2 four times exceedance of the calibration drift.	Checked flows, calibrated O2 sensor, calibrated analog output card, and performed another validation.
1H12-PB1 NOx-004	2/9/12 8:20	2/9/12 8:35	1.00	Check new gas bottles.	Calibrate
1H12-PB1 NOx-005	3/22/12 10:03	3/22/12 10:55	1.00	CGA	N/A
1H12-PB1 NOx-006	3/26/12 6:50	3/26/12 8:40	3.00	Preventive mainteance.	Water wash sample line.
1H12-PB1 NOx-007	3/27/12 8:40	3/27/12 9:20	2.00	Preventive maintenance.	Replaced glass vessel.
1H12-PB1 NOx-008	4/23/12 7:00	4/23/12 8:00	1.00	Changed CO/NOX bottle	Check calibration gas.
1H12-PB1 NOx-009	5/29/12 8:30	5/29/12 10:14	3.00	Plugged sample line.	Steam sampleline and install large sample pump.
1H12-PB1 NOx-010	5/30/12 9:00	5/30/12 10:00	1.00	Performed quarterly CGA.	N/A
1H12-PB1 NOx-011	6/24/12 15:00	6/24/12 17:05	2.00	Fault alarm caused by bad internal pump.	Replaced NOX analyzer internal pump and re-ran a validation for NOX.
		Total Hours of Downtime	18.00		
		Total Operating Hours for the Quarter	4,268		
		Period of Downtime, %	0.4%		

1st Half of 2012 Package Boiler No. 2 NO_X Analyzer Summary Report

POLLUTANT NO_X **EMISSION POINT NUMBER:** 50BF02

REPORTING PERIOD DATES **From:** 1/1/2012 **To:** 6/30/2012

COMPANY:	Valero Refining - Texas, L.P. 9701 Manchester Street Houston, Texas 77012
UNIT ID:	50BF02
PROCESS UNIT:	Package Boiler No. 2
EMISSIONS LIMITATION REQUIRED BY:	NSPS Subpart Db 40 CFR §60.44b(l)(1); 40 CFR §60.44(b)(i)
EMISSIONS LIMITATION:	0.2 lb/MMBtu on a 30-day rolling average
TYPE OF REQUIREMENT:	Standard
MONITORING REQUIREMENT:	40 CFR §60.48b(b)(1)
FREQUENCY:	30-day rolling average
REPORT REQUIRED BY:	40 CFR §60.7(d)
MONITOR MANUFACTURER & MODEL NO:	TECO 42C LOW SOURCE
DATE OF LAST CEMS CERTIFICATION OR	5/31/2012 CGA
PROCESS UNIT DESCRIPTION	Package Boiler
OPERATING HOURS IN PERIOD	2,730 hours

EMISSIONS DATA SUMMARY

1. Duration of Excess Emission (hours) in Reporting Period Due To:

	0.2 lb/MMBtu on a 30-day rolling average
a) Startup/Shutdown	0.0
b) Control Equipment Problems	0.0
c) Process Problems	0.0
d) Other Known Causes	0.0
e) Unknown Causes	0.0

2. Total Duration of Excess Emissions 0.0 hours

3. Percent Excess Emissions 0.0 %

CEMS PERFORMANCE SUMMARY

1. CEMS Downtime (hours) in Reporting Period Due To:

a) Monitor Equipment Malfunctions	0.0
b) Non-Monitor Equipment Malfunctions	0.0
c) Quality Assurance Calibrations	2.0
d) Other Known Causes	61.0
e) Unknown Causes	0.0

2. Total CEMS Downtime 63.0 hours

3. Percent Downtime 2.3 %

The following summary details the magnitude and duration of monitor downtime at the Package Boiler No. 2 NO_X CEMS.

1st Half of 2012

1st Half of 2012 Package Boiler No. 2 NO_X Analyzer Downtime Summary

Event	Start Date/Time	End Date/Time	Duration, Hrs.	Downtime Description	Corrective Action
1H12-PB2 NOx-001	1/2/12 6:45	1/2/12 6:58	1.00	Exceeded two times the O2 calibration drift.	Calibrated and returned to service.
1H12-PB2 NOx-002	3/20/12 3:00	3/20/12 7:57	5.00	Exceed four times the NOX calibration drift due to pump failure, not analyzer failure.	Replaced NOX analyzer pump and recalibrated, also reran the validation. The pump failed at 3 am.
1H12-PB2 NOx-003	3/21/12 6:15	3/22/12 6:30	24.00	Exceed four times the NOX calibration drift.	Re-calibrated.
1H12-PB2 NOx-004	3/22/12 12:16	3/22/12 13:10	1.00	CGA	N/A
1H12-PB2 NOx-005	3/26/12 9:45	3/26/12 11:00	2.00	Preventive mainteance on sample system.	Cleaned sample system and replaced sample filters and sample pump, ran validation after maintenance.
1H12-PB2 NOx-006	5/8/12 6:37	5/8/12 7:25	2.00	Exceeded two times the CO span.	Calibrate analyzer set flows and re-run validation.
1H12-PB2 NOx-007	5/31/12 7:54	5/31/12 8:54	1.00	Performed quarterly CGA.	N/A
1H12-PB2 NOx-008	6/22/12 6:00	6/23/12 9:05	27.00	Exceeded four times the calibration drift.	Replaced bad solenoid valve inside flow drawer and re-ran the validation.
		Total Hours of Downtime	63.00		
		Total Operating Hours for the Quarter	2,730		
		Period of Downtime, %	2.3%		

1st Half of 2012 Package Boiler No. 2 NO_X Analyzer Summary Report

POLLUTANT NO_X **EMISSION POINT NUMBER:** 50BF03

REPORTING PERIOD DATES **From:** 1/1/2012 **To:** 6/30/2012

COMPANY:	Valero Refining - Texas, L.P. 9701 Manchester Street Houston, Texas 77012
UNIT ID:	50BF03
PROCESS UNIT:	Package Boiler No. 3
EMISSIONS LIMITATION REQUIRED BY:	NSPS Subpart Db 40 CFR §60.44b(l)(1); 40 CFR §60.44(b)(i)
EMISSIONS LIMITATION:	0.2 lb/MMBtu on a 30-day rolling average
TYPE OF REQUIREMENT:	Standard
MONITORING REQUIREMENT:	40 CFR §60.48b(b)(1)
FREQUENCY:	30-day rolling average
REPORT REQUIRED BY:	40 CFR §60.7(d)
MONITOR MANUFACTURER & MODEL NO:	TECO 42C LOW SOURCE
DATE OF LAST CEMS CERTIFICATION OR .	5/31/2012 CGA
PROCESS UNIT DESCRIPTION	Package Boiler
OPERATING HOURS IN PERIOD	4,283 hours

EMISSIONS DATA SUMMARY

1. Duration of Excess Emission (hours) in Reporting Period Due To:

	0.2 lb/MMBtu on a 30-day rolling average
a) Startup/Shutdown	0.0
b) Control Equipment Problems	0.0
c) Process Problems	0.0
d) Other Known Causes	0.0
e) Unknown Causes	0.0

2. Total Duration of Excess Emissions 0.0 hours

3. Percent Excess Emissions 0.0 %

CEMS PERFORMANCE SUMMARY

1. CEMS Downtime (hours) in Reporting Period Due To:

a) Monitor Equipment Malfunctions	0.0
b) Non-Monitor Equipment Malfunctions	0.0
c) Quality Assurance Calibrations	3.0
d) Other Known Causes	7.0
e) Unknown Causes	0.0

2. Total CEMS Downtime 10.0 hours

3. Percent Downtime 0.2 %

The following summary details the magnitude and duration of monitor downtime at the Package Boiler No. 3 NO_X CEMS.

1st Half of 2012

1st Half of 2012 Package Boiler No. 3 NO_X Analyzer Downtime Summary

Event	Start Date/Time	End Date/Time	Duration, Hrs.	Downtime Description	Corrective Action
1H12-PB3 NOx-001	1/2/12 6:45	1/2/12 6:58	1.00	Exceeded two times the O2 calibration drift.	Calibrated and returned to service.
1H12-PB3 NOx-002	2/8/12 10:00	2/8/12 10:25	1.00	Change out dirty sample filter and install new full gas cylinders.	Ran validation sequence after maintenance completed.
1H12-PB3 NOx-003	3/22/12 13:10	3/22/12 14:00	1.00	CGA	N/A
1H12-PB3 NOx-004	5/7/12 7:15	5/7/12 8:15	2.00	Needed to unplug analyzer vent tubing line to atmosperic vent header.	Unplugged tubing line and re-ran a validation.
1H12-PB3 NOx-005	5/8/12 7:15	5/8/12 9:15	3.00	Calibrate analyzer and set flows.	Re-ran validation after calibration and setting flows.
1H12-PB3 NOx-006	5/31/12 9:45	5/31/12 10:30	2.00	Performed quarterly CGA.	N/A
		Total Hours of Downtime	10.00		
		Total Operating Hours for the Quarter	2,730		
		Period of Downtime, %	0.4%		

30 TAC Chapter 117 Monitoring System Reports

CEMS Analyzer Downtime
1st Quarter 2012

Analyzer	Downtime Start Date	Downtime End Date	Downtime Hours	Downtime Cause Description	Downtime Repairs/Adjustments
FCC CO	1/2/12 8:00 AM	1/2/12 8:15 AM	1.0	Exceeded two times the O_2 and SO_2 calibration drift.	Calibrated and returned to service.
FCC NO_X	1/2/12 8:00 AM	1/2/12 8:15 AM	1.0	Exceeded two times the O_2 and SO_2 calibration drift.	Calibrated and returned to service.
FCC O_2	1/2/12 8:00 AM	1/2/12 8:15 AM	1.0	Exceeded two times the O_2 and SO_2 calibration drift.	Calibrated and returned to service.
Atm. Htr. CO	1/2/12 8:30 AM	1/2/12 9:00 AM	1.0	Exceeded two times the O_2 calibration drift.	Calibrated and returned to service.
Atm. Htr. NOx	1/2/12 8:30 AM	1/2/12 9:00 AM	1.0	Exceeded two times the O_2 calibration drift.	Calibrated and returned to service.
Atm. Htr. O2	1/2/12 8:30 AM	1/2/12 9:00 AM	1.0	Exceeded two times the O_2 calibration	Calibrated and returned to service.
Boiler No. 1 CO	1/2/12 7:05 AM	1/2/12 7:20 AM	1.0	Exceeded two times the O_2 calibration drift.	Calibrated and returned to service.
Boiler No. 1 NOx	1/2/12 7:05 AM	1/2/12 7:20 AM	1.0	Exceeded two times the O_2 calibration drift.	Calibrated and returned to service.
Boiler No. 1 O2	1/2/12 7:05 AM	1/2/12 7:20 AM	1.0	Exceeded two times the O_2 calibration drift.	Calibrated and returned to service.
Boiler No. 2 CO	1/2/12 6:45 AM	1/2/12 6:58 AM	1.0	Exceeded two times the O_2 calibration drift.	Calibrated and returned to service.
Boiler No. 2 NOx	1/2/12 6:45 AM	1/2/12 6:58 AM	1.0	Exceeded two times the O_2 calibration drift.	Calibrated and returned to service.
Boiler No. 2 O2	1/2/12 6:45 AM	1/2/12 6:58 AM	1.0	Exceeded two times the O_2 calibration drift.	Calibrated and returned to service.
Boiler No. 3 CO	1/2/12 6:45 AM	1/2/12 6:58 AM	1.0	Exceeded two times the O_2 calibration drift.	Calibrated and returned to service.
Boiler No. 3 NOx	1/2/12 6:45 AM	1/2/12 6:58 AM	1.0	Exceeded two times the O_2 calibration drift.	Calibrated and returned to service.
Boiler No. 3 O2	1/2/12 6:45 AM	1/2/12 6:58 AM	1.0	Exceeded two times the O_2 calibration drift.	Calibrated and returned to service.

CEMS Analyzer Downtime
1st Quarter 2012

Analyzer	Downtime Start Date	Downtime End Date	Downtime Hours	Downtime Cause Description	Downtime Repairs/Adjustments
FCC CO	1/5/12 12:15 PM	1/5/12 2:15 PM	3.0	PLC Failed.	Replaced PLC and re-ran a validation.
FCC NO_X	1/5/12 12:15 PM	1/5/12 2:15 PM	3.0	PLC Failed.	Replaced PLC and re-ran a validation.
FCC O_2	1/5/12 12:15 PM	1/5/12 2:15 PM	3.0	PLC Failed.	Replaced PLC and re-ran a validation.
FCC CO	1/9/12 7:00 AM	1/9/12 7:45 AM	1.0	Check PLC configuration.	N/A
FCC NO_X	01/09/2012 07:00 AM	01/09/2012 12:00 AM	1.0	Check PLC configuration.	N/A
FCC O_2	01/09/2012 07:00 AM	01/09/2012 12:00 AM	1.0	Exceeded one times the O_2 calibration	Calibrated span and re-ran validation.
Atm. Htr. CO	1/12/12 7:00 AM	1/12/12 7:30 AM	1.0	Exceeded four times the calibration drift.	Calibration gas out, due to leak in the tube.
Atm. Htr. NOx	1/12/12 7:00 AM	1/12/12 7:30 AM	1.0	Exceeded four times the calibration drift.	Calibration gas out, due to leak in the tube.
Atm. Htr. O2	1/12/12 7:00 AM	1/12/12 7:30 AM	1.0	Exceeded four times the calibration drift.	Calibration gas out, due to leak in the tube.
FCC CO	1/13/12 6:50 AM	1/13/12 7:20 AM	1.0	Exceeded two times the O_2 calibration	Calibrate O_2.
FCC NO_X	1/13/12 6:50 AM	1/13/12 7:20 AM	1.0	Exceeded two times the O_2 calibration drift.	Calibrate O_2.
FCC O_2	1/13/12 6:50 AM	1/13/12 7:20 AM	1.0	Exceeded two times the O_2 calibration drift.	Calibrate O_2.
Boiler No. 1 CO	1/13/12 7:35 AM	1/13/12 7:55 AM	1.0	Exceeded two times the O_2 calibration	Calibrate O_2.
Boiler No. 1 NOx	1/13/12 7:35 AM	1/13/12 7:55 AM	1.0	Exceeded two times the O_2 calibration	Calibrate O_2.
Boiler No. 1 O2	1/13/12 7:35 AM	1/13/12 7:55 AM	1.0	Exceeded two times the O_2 calibration	Calibrate O_2.
FCC CO	1/19/12 10:31 AM	1/19/12 10:46 AM	1.0	Check new bottles of O_2 and SO_2.	Ran gas.
FCC NO_X	1/19/12 10:31 AM	1/19/12 10:46 AM	1.0	Check new bottles of O_2 and SO_2.	Ran gas.
FCC O_2	1/19/12 10:31 AM	1/19/12 10:46 AM	1.0	Check new bottles of O_2 and SO_2.	Ran gas.
Boiler No. 1 CO	2/5/12 7:30 AM	2/5/12 8:30 AM	2.0	Downtime realted to O_2 four times	Checked flows, calibrated O_2 sensor,
Boiler No. 1 NOx	2/5/12 7:30 AM	2/5/12 8:30 AM	2.0	Downtime realted to O_2 four times	Checked flows, calibrated O_2 sensor,
Boiler No. 1 O2	2/5/12 7:30 AM	2/5/12 8:30 AM	26.00	Exceeded four times the calibration drift.	Checked flows, calibrated O_2 sensor,
FCC CO	2/6/12 9:03 AM	2/6/12 9:20 AM	1.00	Check new CO/NOx bottle.	Calibrate.

CEMS Analyzer Downtime
1st Quarter 2012

Analyzer	Downtime Start Date	Downtime End Date	Downtime Hours	Downtime Cause Description	Downtime Repairs/Adjustments
FCC NO_X	2/6/12 9:03 AM	2/6/12 9:20 AM	1.00	Check new CO/NOx bottle.	Calibrate.
FCC O_2	2/6/12 9:03 AM	2/6/12 9:20 AM	1.00	Check new CO/NOx bottle.	Calibrate.
Boiler No. 3 CO	2/8/12 10:00 AM	2/8/12 10:25 AM	1.00	Change out dirty sample filter and install new full gas cylinders.	Ran validation sequence after maintenance completed.
Boiler No. 3 NOx	2/8/12 10:00 AM	2/8/12 10:25 AM	1.00	Change out dirty sample filter and install new full gas cylinders.	Ran validation sequence after maintenance completed.
Boiler No. 3 O2	2/8/12 10:00 AM	2/8/12 10:25 AM	1.00	Change out dirty sample filter and install new full gas cylinders.	Ran validation sequence after maintenance completed.
FCC CO	2/9/12 7:12 AM	2/9/12 7:30 AM	1.00	Check new gas bottles.	Calibrate
FCC NO_X	2/9/12 7:12 AM	2/9/12 7:30 AM	1.00	Check new gas bottles.	Calibrate
FCC O_2	2/9/12 7:12 AM	2/9/12 7:30 AM	1.00	Check new gas bottles.	Calibrate
Boiler No. 1 CO	2/9/12 8:20 AM	2/9/12 8:35 AM	1.00	Check new gas bottles.	Calibrate
Boiler No. 1 NOx	2/9/12 8:20 AM	2/9/12 8:35 AM	1.00	Check new gas bottles.	Calibrate
Boiler No. 1 O_2	2/9/12 8:20 AM	2/9/12 8:35 AM	1.00	Check new gas bottles.	Calibrate
FCC CO	2/23/12 8:14 AM	2/23/12 8:30 AM	1.00	Exceeded two times the O_2 calibration drift.	Re-calibrate.
FCC NO_X	2/23/12 8:14 AM	2/23/12 8:30 AM	1.00	Exceeded two times the O_2 calibration drift.	Re-calibrate.
FCC O_2	2/23/12 8:14 AM	2/23/12 8:30 AM	1.00	Exceeded two times the O_2 calibration drift.	Re-calibrate.
Atm. Htr. CO	2/25/12 8:00 AM	2/25/12 9:00 AM	1.00	Exceeded two times the O_2 calibration drift.	Re-calibrate.
Atm. Htr. NOx	2/25/12 8:00 AM	2/25/12 9:00 AM	1.00	Exceeded two times the O_2 calibration drift.	Re-calibrate.
Atm. Htr. O_2	2/25/12 8:00 AM	2/25/12 9:00 AM	1.00	Exceeded two times the O_2 calibration drift.	Re-calibrate.
Atm. Htr. CO	3/4/12 7:00 AM	3/4/12 7:20 AM	1.00	Exceeded two times the O_2 calibration drift.	Re-calibrate.

CEMS Analyzer Downtime
1st Quarter 2012

Analyzer	Downtime Start Date	Downtime End Date	Downtime Hours	Downtime Cause Description	Downtime Repairs/Adjustments
Atm. Htr. NOx	3/4/12 7:00 AM	3/4/12 7:20 AM	1.00	Exceeded two times the O_2 calibration drift.	Re-calibrate.
Atm. Htr. O2	3/4/12 7:00 AM	3/4/12 7:20 AM	1.00	Exceeded two times the O_2 calibration drift.	Re-calibrate.
FCC CO	3/13/12 11:40 AM	3/13/12 1:00 PM	2.00	Preventive Maintenance	Water wash sample line and calibration line; calibrate.
FCC NOX	3/13/12 11:40 AM	3/13/12 1:00 PM	2.00	Preventive Maintenance	Water wash sample line and calibration line; calibrate.
FCC O2	3/13/12 11:40 AM	3/13/12 1:00 PM	2.00	Preventive Maintenance	Water wash sample line and calibration line; calibrate.
FCC CO	3/19/12 7:03 AM	3/19/12 7:20 AM	1.00	Exceeded two times the O_2 calibration drift.	Calibrated the O_2 span and re-ran the validation.
FCC NOX	3/19/12 7:03 AM	3/19/12 7:20 AM	1.00	Exceeded two times the O_2 calibration drift.	Calibrated the O_2 span and re-ran the validation.
FCC O2	3/19/12 7:03 AM	3/19/12 7:20 AM	1.00	Exceeded two times the O_2 calibration drift.	Calibrated the O_2 span and re-ran the validation.
Boiler No. 2 CO	3/20/12 7:00 AM	3/20/12 7:57 AM	1.00	Due to the NO_X analyzer repairs, an additional calibration and validation was run.	Replaced NO_X analyzer pump and recalibrated, also re-ran the validation.
Boiler No. 2 NOx	3/20/12 3:00 AM	3/20/12 7:57 AM	5.00	Exceed four times the NO_X calibration drift due to pump failure, not analyzer failure.	Replaced NO_X analyzer pump and recalibrated, also reran the validation. The pump failed at 3 am.
Boiler No. 2 O2	3/20/12 7:00 AM	3/20/12 7:57 AM	1.00	Exceeded two times the O_2 calibration drift.	Calibrated the O_2 span and re-ran the validation.
Boiler No. 2 CO	3/21/12 6:15 AM	3/22/12 6:30 AM	1.00	Exceed four times the NO_X calibration drift.	Re-calibrated.
Boiler No. 2 NOx	3/21/12 6:15 AM	3/22/12 6:30 AM	24.00	Exceed four times the NO_X calibration drift.	Re-calibrated.

CEMS Analyzer Downtime
1st Quarter 2012

Analyzer	Downtime Start Date	Downtime End Date	Downtime Hours	Downtime Cause Description	Downtime Repairs/Adjustments
Boiler No. 2 O2	3/21/12 6:15 AM	3/22/12 6:30 AM	1.00	Exceed four times the NO_X calibration drift.	Re-calibrated.
Boiler No. 1 CO	3/22/12 10:03 AM	3/22/12 10:55 AM	1.00	CGA	N/A
Boiler No. 1 NOx	3/22/12 10:03 AM	3/22/12 10:55 AM	1.00	CGA	N/A
Boiler No. 1 O2	3/22/12 10:03 AM	3/22/12 10:55 AM	1.00	CGA	N/A
Boiler No. 2 CO	3/22/12 12:16 PM	3/22/12 1:10 PM	1.00	CGA	N/A
Boiler No. 2 NOx	3/22/12 12:16 PM	3/22/12 1:10 PM	1.00	CGA	N/A
Boiler No. 2 O2	3/22/12 12:16 PM	3/22/12 1:10 PM	1.00	CGA	N/A
Boiler No. 3 CO	3/22/12 1:10 PM	3/22/12 2:00 PM	1.00	CGA	N/A
Boiler No. 3 NOx	3/22/12 1:10 PM	3/22/12 2:00 PM	1.00	CGA	N/A
Boiler No. 3 O2	3/22/12 1:10 PM	3/22/12 2:00 PM	1.00	CGA	N/A
FCC CO	3/22/12 8:09 AM	3/22/12 9:30 AM	1.00	CGA	N/A
FCC NOX	3/22/12 8:09 AM	3/22/12 9:30 AM	1.00	CGA	N/A
FCC O2	3/22/12 8:09 AM	3/22/12 9:30 AM	1.00	CGA	N/A
Boiler No. 1 CO	3/26/12 6:50 AM	3/26/12 8:40 AM	2.00	Preventive mainteance.	Water wash sample line.
Boiler No. 1 NOx	3/26/12 6:50 AM	3/26/12 8:40 AM	3.00	Preventive mainteance.	Water wash sample line.
Boiler No. 1 O2	3/26/12 6:50 AM	3/26/12 8:40 AM	2.00	Preventive mainteance on sample system.	Water wash sample line.
Boiler No. 2 CO	3/26/12 9:45 AM	3/26/12 11:00 AM	2.00	Preventive mainteance on sample system.	Cleaned sample system and replaced sample filters and sample pump, ran validation after maintenance.
Boiler No. 2 NOx	3/26/12 9:45 AM	3/26/12 11:00 AM	2.00	Preventive mainteance on sample system.	Cleaned sample system and replaced sample filters and sample pump, ran validation after maintenance.

CEMS Analyzer Downtime
1st Quarter 2012

Analyzer	Downtime Start Date	Downtime End Date	Downtime Hours	Downtime Cause Description	Downtime Repairs/Adjustments
Boiler No. 2 O2	3/26/12 9:45 AM	3/26/12 11:00 AM	2.00	Preventive mainteance on sample system.	Cleaned sample system and replaced sample filters and sample pump, ran validation after maintenance.
Boiler No. 1 CO	3/27/12 8:40 AM	3/27/12 9:20 AM	2.00	Preventive maintenance.	Replaced glass vessel.
Boiler No. 1 NOx	3/27/12 8:40 AM	3/27/12 9:20 AM	2.00	Preventive maintenance.	Replaced glass vessel.
Boiler No. 1 O2	3/27/12 8:40 AM	3/27/12 9:20 AM	2.00	Preventive maintenance.	Replaced glass vessel.
Atm. Htr. CO	3/23/12 6:46 AM	3/23/12 9:51 AM	4.00	Quarterly CGA	N/A
Atm. Htr. NOx	3/23/12 6:46 AM	3/23/12 9:51 AM	4.00	Quarterly CGA	N/A
Atm. Htr. O2	3/23/12 6:46 AM	3/23/12 9:51 AM	4.00	Quarterly CGA	N/A

CEMS Analyzer Downtime
2nd Quarter 2012

Analyzer	Downtime Start Date	Downtime End Date	Downtime Hours	Downtime Cause Description	Downtime Repairs/Adjustments
FCC CO	4/3/12 6:45 AM	4/3/12 6:59 AM	1.0	Exceeded two times the SO_2 span.	Re-calibrate.
FCC NOX	4/3/12 6:45 AM	4/3/12 6:59 AM	1.0	Exceeded two times the SO_2 span.	Re-calibrate.
FCC O2	4/3/12 6:45 AM	4/3/12 6:59 AM	1.0	Exceeded two times the SO_2 span.	Re-calibrate.
Atm. Htr. CO	4/8/12 8:03 AM	4/8/12 8:30 AM	1.0	Exceeded two times the O_2 span.	Re-calibrate.
Atm. Htr. NOx	4/8/12 8:03 AM	4/8/12 8:30 AM	1.0	Exceeded two times the O_2 span.	Re-calibrate.
Atm. Htr. O2	4/8/12 8:03 AM	4/8/12 8:30 AM	1.0	Exceeded two times the O_2 span.	Re-calibrate.
FCC CO	4/24/12 6:48 AM	4/24/12 7:59 AM	1.0	Excced two times the NO_X calibration span.	Replaced internal NO_X pump and calibrate.
FCC NOX	4/24/12 6:48 AM	4/24/12 7:59 AM	1.0	Excced two times the NO_X calibration span.	Replaced internal NO_X pump and calibrate.
FCC O2	4/24/12 6:48 AM	4/24/12 7:59 AM	1.0	Excced two times the NO_X calibration span.	Replaced internal NO_X pump and calibrate.
Boiler No. 1 CO	4/23/12 7:00 AM	4/23/12 8:00 AM	1.0	Changed CO/NO_X bottle	Check calibration gas.
Boiler No. 1 NOx	4/23/12 7:00 AM	4/23/12 8:00 AM	1.0	Changed CO/NO_X bottle	Check calibration gas.
Boiler No. 1 O2	4/23/12 7:00 AM	4/23/12 8:00 AM	1.0	Changed CO/NO_X bottle	Check calibration gas.
Boiler No. 2 CO	5/6/12 4:00 AM	5/6/12 10:00 AM	6.0	Analyzer reading high CO.	Investigated and discovered that the back pressure vent header causing analyzer to reads higher. Installed temporary header and waitng to get another main header installed.
Boiler No. 2 O2	5/7/12 7:15 AM	5/7/12 8:15 AM	2.0	Needed to unplug analyzer vent tubing line to atmosperic vent header.	Unplugged tubing line and re-ran a validation.

CEMS Analyzer Downtime
2nd Quarter 2012

Analyzer	Downtime Start Date	Downtime End Date	Downtime Hours	Downtime Cause Description	Downtime Repairs/Adjustments
Boiler No. 3 CO	5/7/12 7:15 AM	5/7/12 8:15 AM	2.0	Needed to unplug analyzer vent tubing line to atmosperic vent header.	Unplugged tubing line and re-ran a validation.
Boiler No. 3 NOx	5/7/12 7:15 AM	5/7/12 8:15 AM	2.0	Needed to unplug analyzer vent tubing line to atmosperic vent header.	Unplugged tubing line and re-ran a validation.
FCC CO	5/8/12 10:08 AM	5/8/12 10:50 AM	1.0	Changed O_2 bottle.	Re-calibrate.
FCC NOX	5/8/12 10:08 AM	5/8/12 10:50 AM	1.0	Changed O_2 bottle.	Re-calibrate.
FCC O2	5/8/12 10:08 AM	5/8/12 10:50 AM	1.0	Changed O_2 bottle.	Re-calibrate.
Boiler No. 2 CO	5/8/12 6:37 AM	5/8/12 7:25 AM	2.0	Exceeded two times the CO span.	Calibrate analyzer set flows and re-run validation.
Boiler No. 2 NOx	5/8/12 6:37 AM	5/8/12 7:25 AM	2.0	Exceeded two times the CO span.	Calibrate analyzer set flows and re-run validation.
Boiler No. 2 O2	5/8/12 6:37 AM	5/8/12 7:25 AM	2.0	Exceeded two times the CO span.	Calibrate analyzer set flows and re-run
Boiler No. 3 CO	5/8/12 7:15 AM	5/8/12 9:15 AM	3.0	Calibrate analyzer and set flows.	Re-ran validation after calibration and
Boiler No. 3 NOx	5/8/12 7:15 AM	5/8/12 9:15 AM	3.0	Calibrate analyzer and set flows.	Re-ran validation after calibration and
Boiler No. 3 O2	5/8/12 7:15 AM	5/8/12 9:15 AM	3.0	Calibrate analyzer and set flows.	Re-ran validation after calibration and
Atm. Htr. CO	5/29/12 12:00 PM	5/29/12 2:00 PM	2.0	Performed quarterly CGA.	N/A
Atm. Htr. NOx	5/29/12 12:00 PM	5/29/12 2:00 PM	2.0	Performed quarterly CGA.	N/A
Atm. Htr. O2	5/29/12 12:00 PM	5/29/12 2:00 PM	2.0	Performed quarterly CGA.	N/A
Boiler No. 1 CO	5/29/12 8:30 AM	5/29/12 10:14 AM	3.0	Plugged sample line.	Steam sampleline and install large
Boiler No. 1 NOx	5/29/12 8:30 AM	5/29/12 10:14 AM	3.0	Plugged sample line.	Steam sampleline and install large
Boiler No. 1 O2	5/29/12 8:30 AM	5/29/12 10:14 AM	3.0	Plugged sample line.	Steam sampleline and install large sample pump.
FCC CO	5/30/12 12:05 PM	5/30/12 1:35 PM	2.0	Performed quarterly CGA.	N/A
FCC NOX	5/30/12 12:05 PM	5/30/12 1:35 PM	2.0	Performed quarterly CGA.	N/A
FCC O2	5/30/12 12:05 PM	5/30/12 1:35 PM	2.0	Performed quarterly CGA.	N/A
Boiler No. 1 CO	5/30/12 9:00 AM	5/30/12 10:00 AM	1.0	Performed quarterly CGA.	N/A

CEMS Analyzer Downtime
2nd Quarter 2012

Analyzer	Downtime Start Date	Downtime End Date	Downtime Hours	Downtime Cause Description	Downtime Repairs/Adjustments
Boiler No. 1 NOx	5/30/12 9:00 AM	5/30/12 10:00 AM	1.0	Performed quarterly CGA.	N/A
Boiler No. 1 O2	5/30/12 9:00 AM	5/30/12 10:00 AM	1.0	Performed quarterly CGA.	N/A
Boiler No. 2 CO	5/31/12 7:54 AM	5/31/12 8:54 AM	1.0	Performed quarterly CGA.	N/A
Boiler No. 2 NOx	5/31/12 7:54 AM	5/31/12 8:54 AM	1.0	Performed quarterly CGA.	N/A
Boiler No. 2 O2	5/31/12 7:54 AM	5/31/12 8:54 AM	1.0	Performed quarterly CGA.	N/A
Boiler No. 3 CO	5/31/12 9:45 AM	5/31/12 10:30 AM	2.0	Performed quarterly CGA.	N/A
Boiler No. 3 NOx	5/31/12 9:45 AM	5/31/12 10:30 AM	2.0	Performed quarterly CGA.	N/A
Boiler No. 3 O2	5/31/12 9:45 AM	5/31/12 10:30 AM	2.0	Performed quarterly CGA.	N/A
FCC CO	6/21/12 12:04 PM	6/21/12 12:26 PM	1.00	New NO_X/CO bottle.	Check calibration new bottle.
FCC NOX	6/21/12 12:04 PM	6/21/12 12:26 PM	1.00	New NO_X/CO bottle.	Check calibration new bottle.
FCC O2	6/21/12 12:04 PM	6/21/12 12:26 PM	1.00	New NO_X/CO bottle.	Check calibration new bottle.
Boiler No. 2 CO	6/23/12 6:00 AM	6/23/12 9:05 AM	3.00	Exceeded two times the calibration drift.	Replaced bad solenoid valve inside flow drawer and re-ran the validation.
Boiler No. 2 NOx	6/22/12 6:00 AM	6/23/12 9:05 AM	27.00	Exceeded four times the calibration drift.	Replaced bad solenoid valve inside flow drawer and re-ran the validation.
Boiler No. 2 O2	6/22/12 6:00 AM	6/23/12 9:05 AM	27.00	Exceeded four times the calibration drift.	Replaced bad solenoid valve inside flow drawer and re-ran the validation.
Boiler No. 1 NOx	6/24/12 3:00 PM	6/24/12 5:05 PM	2.00	Fault alarm caused by bad internal pump.	Replaced NO_X analyzer internal pump and re-ran a validation for NO_X.

Appendix C
Boiler NSPS Db Reports

Package Boiler No. 1 EPN 81BF01			Package Boiler No. 2 EPN 50BF02			Package Boiler No. 3 EPN 50BF03		
Date	NO_X (lb/MMBtu)	NO_X (lb/MMBtu) 30-day Rolling Average	Date	NO_X (lb/MMBtu)	NO_X (lb/MMBtu) 30-day Rolling Average	Date	NO_X (lb/MMBtu)	NO_X (lb/MMBtu) 30-day Rolling Average
1/1/2012 0:00	0.0088	--	1/1/2012 0:00	SOURCE DOWN	--	1/1/2012 0:00	0.0091	--
1/1/2012 1:00	0.0088	--	1/1/2012 1:00	SOURCE DOWN	--	1/1/2012 1:00	0.0092	--
1/1/2012 2:00	0.0087	--	1/1/2012 2:00	SOURCE DOWN	--	1/1/2012 2:00	0.0091	--
1/1/2012 3:00	0.0088	--	1/1/2012 3:00	SOURCE DOWN	--	1/1/2012 3:00	0.0091	--
1/1/2012 4:00	0.0088	--	1/1/2012 4:00	SOURCE DOWN	--	1/1/2012 4:00	0.0094	--
1/1/2012 5:00	0.0091	--	1/1/2012 5:00	SOURCE DOWN	--	1/1/2012 5:00	0.0102	--
1/1/2012 6:00	0.0089	--	1/1/2012 6:00	SOURCE DOWN	--	1/1/2012 6:00	0.0106	--
1/1/2012 7:00	0.0087	--	1/1/2012 7:00	SOURCE DOWN	--	1/1/2012 7:00	0.0092	--
1/1/2012 8:00	0.0088	--	1/1/2012 8:00	SOURCE DOWN	--	1/1/2012 8:00	0.0092	--
1/1/2012 9:00	0.0088	--	1/1/2012 9:00	SOURCE DOWN	--	1/1/2012 9:00	0.0092	--
1/1/2012 10:00	0.0087	--	1/1/2012 10:00	SOURCE DOWN	--	1/1/2012 10:00	0.0093	--
1/1/2012 11:00	0.0087	--	1/1/2012 11:00	SOURCE DOWN	--	1/1/2012 11:00	0.0086	--
1/1/2012 12:00	0.0087	--	1/1/2012 12:00	SOURCE DOWN	--	1/1/2012 12:00	0.0094	--
1/1/2012 13:00	0.0086	--	1/1/2012 13:00	SOURCE DOWN	--	1/1/2012 13:00	0.0087	--
1/1/2012 14:00	0.0088	--	1/1/2012 14:00	SOURCE DOWN	--	1/1/2012 14:00	0.0088	--
1/1/2012 15:00	0.0087	--	1/1/2012 15:00	SOURCE DOWN	--	1/1/2012 15:00	0.0091	--
1/1/2012 16:00	0.0086	--	1/1/2012 16:00	SOURCE DOWN	--	1/1/2012 16:00	0.0088	--
1/1/2012 17:00	0.0087	--	1/1/2012 17:00	SOURCE DOWN	--	1/1/2012 17:00	0.0090	--
1/1/2012 18:00	0.0087	--	1/1/2012 18:00	SOURCE DOWN	--	1/1/2012 18:00	0.0086	--
1/1/2012 19:00	0.0087	--	1/1/2012 19:00	SOURCE DOWN	--	1/1/2012 19:00	0.0086	--
1/1/2012 20:00	0.0088	--	1/1/2012 20:00	SOURCE DOWN	--	1/1/2012 20:00	0.0086	--
1/1/2012 21:00	0.0088	--	1/1/2012 21:00	SOURCE DOWN	--	1/1/2012 21:00	0.0088	--
1/1/2012 22:00	0.0087	--	1/1/2012 22:00	SOURCE DOWN	--	1/1/2012 22:00	0.0086	--
1/1/2012 23:00	0.0088	--	1/1/2012 23:00	SOURCE DOWN	--	1/1/2012 23:00	0.0087	--
1/2/2012 0:00	0.0087	--	1/2/2012 0:00	SOURCE DOWN	--	1/2/2012 0:00	0.0087	--
1/2/2012 1:00	0.0087	--	1/2/2012 1:00	SOURCE DOWN	--	1/2/2012 1:00	0.0087	--
1/2/2012 2:00	0.0087	--	1/2/2012 2:00	SOURCE DOWN	--	1/2/2012 2:00	0.0087	--
1/2/2012 3:00	0.0088	--	1/2/2012 3:00	SOURCE DOWN	--	1/2/2012 3:00	0.0087	--
1/2/2012 4:00	0.0086	--	1/2/2012 4:00	SOURCE DOWN	--	1/2/2012 4:00	0.0088	--
1/2/2012 5:00	0.0087	--	1/2/2012 5:00	SOURCE DOWN	--	1/2/2012 5:00	0.0088	--
1/2/2012 6:00	0.0093	--	1/2/2012 6:00	SOURCE DOWN	--	1/2/2012 6:00	DOWNTIME	--
1/2/2012 7:00	DOWNTIME	--	1/2/2012 7:00	SOURCE DOWN	--	1/2/2012 7:00	0.0098	--
1/2/2012 8:00	0.0087	--	1/2/2012 8:00	SOURCE DOWN	--	1/2/2012 8:00	0.0087	--
1/2/2012 9:00	0.0087	--	1/2/2012 9:00	SOURCE DOWN	--	1/2/2012 9:00	0.0087	--
1/2/2012 10:00	0.0087	--	1/2/2012 10:00	SOURCE DOWN	--	1/2/2012 10:00	0.0086	--

Package Boiler No. 1 EPN 81BF01			Package Boiler No. 2 EPN 50BF02			Package Boiler No. 3 EPN 50BF03		
Date	NO_X (lb/MMBtu)	NO_X (lb/MMBtu) 30-day Rolling Average	Date	NO_X (lb/MMBtu)	NO_X (lb/MMBtu) 30-day Rolling Average	Date	NO_X (lb/MMBtu)	NO_X (lb/MMBtu) 30-day Rolling Average
1/2/2012 11:00	0.0087	--	1/2/2012 11:00	SOURCE DOWN	--	1/2/2012 11:00	0.0085	--
1/2/2012 12:00	0.0087	--	1/2/2012 12:00	SOURCE DOWN	--	1/2/2012 12:00	0.0091	--
1/2/2012 13:00	0.0087	--	1/2/2012 13:00	SOURCE DOWN	--	1/2/2012 13:00	0.0087	--
1/2/2012 14:00	0.0088	--	1/2/2012 14:00	SOURCE DOWN	--	1/2/2012 14:00	0.0085	--
1/2/2012 15:00	0.0086	--	1/2/2012 15:00	SOURCE DOWN	--	1/2/2012 15:00	0.0088	--
1/2/2012 16:00	0.0086	--	1/2/2012 16:00	SOURCE DOWN	--	1/2/2012 16:00	0.0083	--
1/2/2012 17:00	0.0087	--	1/2/2012 17:00	SOURCE DOWN	--	1/2/2012 17:00	0.0089	--
1/2/2012 18:00	0.0086	--	1/2/2012 18:00	SOURCE DOWN	--	1/2/2012 18:00	0.0087	--
1/2/2012 19:00	0.0087	--	1/2/2012 19:00	SOURCE DOWN	--	1/2/2012 19:00	0.0086	--
1/2/2012 20:00	0.0087	--	1/2/2012 20:00	SOURCE DOWN	--	1/2/2012 20:00	0.0090	--
1/2/2012 21:00	0.0087	--	1/2/2012 21:00	SOURCE DOWN	--	1/2/2012 21:00	0.0085	--
1/2/2012 22:00	0.0088	--	1/2/2012 22:00	SOURCE DOWN	--	1/2/2012 22:00	0.0086	--
1/2/2012 23:00	0.0087	--	1/2/2012 23:00	SOURCE DOWN	--	1/2/2012 23:00	0.0089	--
1/3/2012 0:00	0.0088	--	1/3/2012 0:00	SOURCE DOWN	--	1/3/2012 0:00	0.0084	--
1/3/2012 1:00	0.0088	--	1/3/2012 1:00	SOURCE DOWN	--	1/3/2012 1:00	0.0092	--
1/3/2012 2:00	0.0088	--	1/3/2012 2:00	SOURCE DOWN	--	1/3/2012 2:00	0.0084	--
1/3/2012 3:00	0.0086	--	1/3/2012 3:00	SOURCE DOWN	--	1/3/2012 3:00	0.0083	--
1/3/2012 4:00	0.0087	--	1/3/2012 4:00	SOURCE DOWN	--	1/3/2012 4:00	0.0086	--
1/3/2012 5:00	0.0087	--	1/3/2012 5:00	SOURCE DOWN	--	1/3/2012 5:00	0.0089	--
1/3/2012 6:00	0.0090	--	1/3/2012 6:00	SOURCE DOWN	--	1/3/2012 6:00	0.0265	--
1/3/2012 7:00	0.0087	--	1/3/2012 7:00	SOURCE DOWN	--	1/3/2012 7:00	0.0085	--
1/3/2012 8:00	0.0088	--	1/3/2012 8:00	SOURCE DOWN	--	1/3/2012 8:00	0.0090	--
1/3/2012 9:00	0.0088	--	1/3/2012 9:00	SOURCE DOWN	--	1/3/2012 9:00	0.0077	--
1/3/2012 10:00	0.0087	--	1/3/2012 10:00	SOURCE DOWN	--	1/3/2012 10:00	0.0073	--
1/3/2012 11:00	0.0087	--	1/3/2012 11:00	SOURCE DOWN	--	1/3/2012 11:00	0.0066	--
1/3/2012 12:00	0.0087	--	1/3/2012 12:00	SOURCE DOWN	--	1/3/2012 12:00	0.0065	--
1/3/2012 13:00	0.0086	--	1/3/2012 13:00	SOURCE DOWN	--	1/3/2012 13:00	0.0066	--
1/3/2012 14:00	0.0086	--	1/3/2012 14:00	SOURCE DOWN	--	1/3/2012 14:00	0.0067	--
1/3/2012 15:00	0.0087	--	1/3/2012 15:00	SOURCE DOWN	--	1/3/2012 15:00	0.0066	--
1/3/2012 16:00	0.0086	--	1/3/2012 16:00	SOURCE DOWN	--	1/3/2012 16:00	0.0067	--

Package Boiler No. 1 EPN 81BF01			Package Boiler No. 2 EPN 50BF02			Package Boiler No. 3 EPN 50BF03		
Date	NO_X (lb/MMBtu)	NO_X (lb/MMBtu) 30-day Rolling Average	Date	NO_X (lb/MMBtu)	NO_X (lb/MMBtu) 30-day Rolling Average	Date	NO_X (lb/MMBtu)	NO_X (lb/MMBtu) 30-day Rolling Average
1/3/2012 17:00	0.0085	--	1/3/2012 17:00	SOURCE DOWN	--	1/3/2012 17:00	0.0069	--
1/3/2012 18:00	0.0087	--	1/3/2012 18:00	SOURCE DOWN	--	1/3/2012 18:00	0.0068	--
1/3/2012 19:00	0.0087	--	1/3/2012 19:00	SOURCE DOWN	--	1/3/2012 19:00	0.0073	--
1/3/2012 20:00	0.0087	--	1/3/2012 20:00	SOURCE DOWN	--	1/3/2012 20:00	0.0071	--
1/3/2012 21:00	0.0087	--	1/3/2012 21:00	SOURCE DOWN	--	1/3/2012 21:00	0.0072	--
1/3/2012 22:00	0.0086	--	1/3/2012 22:00	SOURCE DOWN	--	1/3/2012 22:00	0.0074	--
1/3/2012 23:00	0.0087	--	1/3/2012 23:00	SOURCE DOWN	--	1/3/2012 23:00	0.0077	--
1/4/2012 0:00	0.0088	--	1/4/2012 0:00	SOURCE DOWN	--	1/4/2012 0:00	0.0076	--
1/4/2012 1:00	0.0087	--	1/4/2012 1:00	SOURCE DOWN	--	1/4/2012 1:00	0.0070	--
1/4/2012 2:00	0.0087	--	1/4/2012 2:00	SOURCE DOWN	--	1/4/2012 2:00	0.0072	--
1/4/2012 3:00	0.0088	--	1/4/2012 3:00	SOURCE DOWN	--	1/4/2012 3:00	0.0078	--
1/4/2012 4:00	0.0088	--	1/4/2012 4:00	SOURCE DOWN	--	1/4/2012 4:00	0.0077	--
1/4/2012 5:00	0.0089	--	1/4/2012 5:00	SOURCE DOWN	--	1/4/2012 5:00	0.0073	--
1/4/2012 6:00	0.0089	--	1/4/2012 6:00	SOURCE DOWN	--	1/4/2012 6:00	0.0077	--
1/4/2012 7:00	0.0086	--	1/4/2012 7:00	SOURCE DOWN	--	1/4/2012 7:00	0.0070	--
1/4/2012 8:00	0.0092	--	1/4/2012 8:00	SOURCE DOWN	--	1/4/2012 8:00	0.0074	--
1/4/2012 9:00	0.0114	--	1/4/2012 9:00	SOURCE DOWN	--	1/4/2012 9:00	0.0089	--
1/4/2012 10:00	0.0108	--	1/4/2012 10:00	SOURCE DOWN	--	1/4/2012 10:00	0.0076	--
1/4/2012 11:00	0.0076	--	1/4/2012 11:00	SOURCE DOWN	--	1/4/2012 11:00	0.0084	--
1/4/2012 12:00	0.0065	--	1/4/2012 12:00	SOURCE DOWN	--	1/4/2012 12:00	0.0066	--
1/4/2012 13:00	0.0094	--	1/4/2012 13:00	SOURCE DOWN	--	1/4/2012 13:00	0.0081	--
1/4/2012 14:00	0.0070	--	1/4/2012 14:00	SOURCE DOWN	--	1/4/2012 14:00	0.0069	--
1/4/2012 15:00	0.0087	--	1/4/2012 15:00	SOURCE DOWN	--	1/4/2012 15:00	0.0063	--
1/4/2012 16:00	0.0088	--	1/4/2012 16:00	SOURCE DOWN	--	1/4/2012 16:00	0.0080	--
1/4/2012 17:00	0.0090	--	1/4/2012 17:00	SOURCE DOWN	--	1/4/2012 17:00	0.0077	--
1/4/2012 18:00	0.0086	--	1/4/2012 18:00	SOURCE DOWN	--	1/4/2012 18:00	0.0072	--
1/4/2012 19:00	0.0087	--	1/4/2012 19:00	SOURCE DOWN	--	1/4/2012 19:00	0.0069	--
1/4/2012 20:00	0.0086	--	1/4/2012 20:00	SOURCE DOWN	--	1/4/2012 20:00	0.0073	--
1/4/2012 21:00	0.0086	--	1/4/2012 21:00	SOURCE DOWN	--	1/4/2012 21:00	0.0068	--
1/4/2012 22:00	0.0091	--	1/4/2012 22:00	SOURCE DOWN	--	1/4/2012 22:00	0.0076	--
1/4/2012 23:00	0.0087	--	1/4/2012 23:00	SOURCE DOWN	--	1/4/2012 23:00	0.0076	--
1/5/2012 0:00	0.0087	--	1/5/2012 0:00	SOURCE DOWN	--	1/5/2012 0:00	0.0075	--
1/5/2012 1:00	0.0089	--	1/5/2012 1:00	SOURCE DOWN	--	1/5/2012 1:00	0.0076	--
1/5/2012 2:00	0.0094	--	1/5/2012 2:00	SOURCE DOWN	--	1/5/2012 2:00	0.0087	--
1/5/2012 3:00	0.0089	--	1/5/2012 3:00	SOURCE DOWN	--	1/5/2012 3:00	0.0074	--
1/5/2012 4:00	0.0088	--	1/5/2012 4:00	SOURCE DOWN	--	1/5/2012 4:00	0.0074	--
1/5/2012 5:00	0.0088	--	1/5/2012 5:00	SOURCE DOWN	--	1/5/2012 5:00	0.0074	--
1/5/2012 6:00	0.0094	--	1/5/2012 6:00	SOURCE DOWN	--	1/5/2012 6:00	0.0079	--
1/5/2012 7:00	0.0089	--	1/5/2012 7:00	SOURCE DOWN	--	1/5/2012 7:00	0.0077	--
1/5/2012 8:00	0.0089	--	1/5/2012 8:00	SOURCE DOWN	--	1/5/2012 8:00	0.0078	--
1/5/2012 9:00	0.0086	--	1/5/2012 9:00	SOURCE DOWN	--	1/5/2012 9:00	0.0074	--

Package Boiler No. 1 EPN 81BF01			Package Boiler No. 2 EPN 50BF02			Package Boiler No. 3 EPN 50BF03		
Date	NO_X (lb/MMBtu)	NO_X (lb/MMBtu) 30-day Rolling Average	Date	NO_X (lb/MMBtu)	NO_X (lb/MMBtu) 30-day Rolling Average	Date	NO_X (lb/MMBtu)	NO_X (lb/MMBtu) 30-day Rolling Average
1/5/2012 10:00	0.0088	--	1/5/2012 10:00	SOURCE DOWN	--	1/5/2012 10:00	0.0071	--
1/5/2012 11:00	0.0096	--	1/5/2012 11:00	SOURCE DOWN	--	1/5/2012 11:00	0.0085	--
1/5/2012 12:00	0.0093	--	1/5/2012 12:00	SOURCE DOWN	--	1/5/2012 12:00	0.0077	--
1/5/2012 13:00	0.0092	--	1/5/2012 13:00	SOURCE DOWN	--	1/5/2012 13:00	0.0074	--
1/5/2012 14:00	0.0092	--	1/5/2012 14:00	SOURCE DOWN	--	1/5/2012 14:00	0.0077	--
1/5/2012 15:00	0.0088	--	1/5/2012 15:00	SOURCE DOWN	--	1/5/2012 15:00	0.0075	--
1/5/2012 16:00	0.0083	--	1/5/2012 16:00	SOURCE DOWN	--	1/5/2012 16:00	0.0070	--
1/5/2012 17:00	0.0084	--	1/5/2012 17:00	SOURCE DOWN	--	1/5/2012 17:00	0.0070	--
1/5/2012 18:00	0.0089	--	1/5/2012 18:00	SOURCE DOWN	--	1/5/2012 18:00	0.0071	--
1/5/2012 19:00	0.0088	--	1/5/2012 19:00	SOURCE DOWN	--	1/5/2012 19:00	0.0070	--
1/5/2012 20:00	0.0087	--	1/5/2012 20:00	SOURCE DOWN	--	1/5/2012 20:00	0.0071	--
1/5/2012 21:00	0.0087	--	1/5/2012 21:00	SOURCE DOWN	--	1/5/2012 21:00	0.0074	--
1/5/2012 22:00	0.0087	--	1/5/2012 22:00	SOURCE DOWN	--	1/5/2012 22:00	0.0072	--
1/5/2012 23:00	0.0087	--	1/5/2012 23:00	SOURCE DOWN	--	1/5/2012 23:00	0.0073	--
1/6/2012 0:00	0.0087	--	1/6/2012 0:00	SOURCE DOWN	--	1/6/2012 0:00	0.0073	--
1/6/2012 1:00	0.0087	--	1/6/2012 1:00	SOURCE DOWN	--	1/6/2012 1:00	0.0073	--
1/6/2012 2:00	0.0088	--	1/6/2012 2:00	SOURCE DOWN	--	1/6/2012 2:00	0.0073	--
1/6/2012 3:00	0.0088	--	1/6/2012 3:00	SOURCE DOWN	--	1/6/2012 3:00	0.0074	--
1/6/2012 4:00	0.0088	--	1/6/2012 4:00	SOURCE DOWN	--	1/6/2012 4:00	0.0073	--
1/6/2012 5:00	0.0088	--	1/6/2012 5:00	SOURCE DOWN	--	1/6/2012 5:00	0.0073	--
1/6/2012 6:00	0.0090	--	1/6/2012 6:00	SOURCE DOWN	--	1/6/2012 6:00	0.0064	--
1/6/2012 7:00	0.0089	--	1/6/2012 7:00	SOURCE DOWN	--	1/6/2012 7:00	0.0078	--
1/6/2012 8:00	0.0087	--	1/6/2012 8:00	SOURCE DOWN	--	1/6/2012 8:00	0.0081	--
1/6/2012 9:00	0.0097	--	1/6/2012 9:00	SOURCE DOWN	--	1/6/2012 9:00	0.0088	--
1/6/2012 10:00	0.0082	--	1/6/2012 10:00	SOURCE DOWN	--	1/6/2012 10:00	0.0078	--
1/6/2012 11:00	0.0088	--	1/6/2012 11:00	SOURCE DOWN	--	1/6/2012 11:00	0.0079	--
1/6/2012 12:00	0.0083	--	1/6/2012 12:00	SOURCE DOWN	--	1/6/2012 12:00	0.0089	--
1/6/2012 13:00	0.0082	--	1/6/2012 13:00	SOURCE DOWN	--	1/6/2012 13:00	0.0083	--
1/6/2012 14:00	0.0092	--	1/6/2012 14:00	SOURCE DOWN	--	1/6/2012 14:00	0.0089	--
1/6/2012 15:00	0.0086	--	1/6/2012 15:00	SOURCE DOWN	--	1/6/2012 15:00	0.0080	--
1/6/2012 16:00	0.0088	--	1/6/2012 16:00	SOURCE DOWN	--	1/6/2012 16:00	0.0080	--
1/6/2012 17:00	0.0086	--	1/6/2012 17:00	SOURCE DOWN	--	1/6/2012 17:00	0.0077	--
1/6/2012 18:00	0.0087	--	1/6/2012 18:00	SOURCE DOWN	--	1/6/2012 18:00	0.0083	--
1/6/2012 19:00	0.0088	--	1/6/2012 19:00	SOURCE DOWN	--	1/6/2012 19:00	0.0082	--
1/6/2012 20:00	0.0087	--	1/6/2012 20:00	SOURCE DOWN	--	1/6/2012 20:00	0.0083	--
1/6/2012 21:00	0.0088	--	1/6/2012 21:00	SOURCE DOWN	--	1/6/2012 21:00	0.0084	--
1/6/2012 22:00	0.0088	--	1/6/2012 22:00	SOURCE DOWN	--	1/6/2012 22:00	0.0083	--
1/6/2012 23:00	0.0088	--	1/6/2012 23:00	SOURCE DOWN	--	1/6/2012 23:00	0.0083	--
1/7/2012 0:00	0.0091	--	1/7/2012 0:00	SOURCE DOWN	--	1/7/2012 0:00	0.0086	--
1/7/2012 1:00	0.0087	--	1/7/2012 1:00	SOURCE DOWN	--	1/7/2012 1:00	0.0082	--
1/7/2012 2:00	0.0089	--	1/7/2012 2:00	SOURCE DOWN	--	1/7/2012 2:00	0.0083	--

Package Boiler No. 1 EPN 81BF01			Package Boiler No. 2 EPN 50BF02			Package Boiler No. 3 EPN 50BF03		
Date	NO_X (lb/MMBtu)	NO_X (lb/MMBtu) 30-day Rolling Average	Date	NO_X (lb/MMBtu)	NO_X (lb/MMBtu) 30-day Rolling Average	Date	NO_X (lb/MMBtu)	NO_X (lb/MMBtu) 30-day Rolling Average
1/7/2012 3:00	0.0089	--	1/7/2012 3:00	SOURCE DOWN	--	1/7/2012 3:00	0.0085	--
1/7/2012 4:00	0.0087	--	1/7/2012 4:00	SOURCE DOWN	--	1/7/2012 4:00	0.0081	--
1/7/2012 5:00	0.0087	--	1/7/2012 5:00	SOURCE DOWN	--	1/7/2012 5:00	0.0081	--
1/7/2012 6:00	0.0087	--	1/7/2012 6:00	SOURCE DOWN	--	1/7/2012 6:00	0.0082	--
1/7/2012 7:00	0.0088	--	1/7/2012 7:00	SOURCE DOWN	--	1/7/2012 7:00	0.0083	--
1/7/2012 8:00	0.0088	--	1/7/2012 8:00	SOURCE DOWN	--	1/7/2012 8:00	0.0083	--
1/7/2012 9:00	0.0088	--	1/7/2012 9:00	SOURCE DOWN	--	1/7/2012 9:00	0.0082	--
1/7/2012 10:00	0.0091	--	1/7/2012 10:00	SOURCE DOWN	--	1/7/2012 10:00	0.0088	--
1/7/2012 11:00	0.0089	--	1/7/2012 11:00	SOURCE DOWN	--	1/7/2012 11:00	0.0086	--
1/7/2012 12:00	0.0089	--	1/7/2012 12:00	SOURCE DOWN	--	1/7/2012 12:00	0.0087	--
1/7/2012 13:00	0.0088	--	1/7/2012 13:00	SOURCE DOWN	--	1/7/2012 13:00	0.0108	--
1/7/2012 14:00	0.0089	--	1/7/2012 14:00	SOURCE DOWN	--	1/7/2012 14:00	0.0104	--
1/7/2012 15:00	0.0091	--	1/7/2012 15:00	SOURCE DOWN	--	1/7/2012 15:00	0.0093	--
1/7/2012 16:00	0.0088	--	1/7/2012 16:00	SOURCE DOWN	--	1/7/2012 16:00	0.0084	--
1/7/2012 17:00	0.0088	--	1/7/2012 17:00	SOURCE DOWN	--	1/7/2012 17:00	0.0079	--
1/7/2012 18:00	0.0088	--	1/7/2012 18:00	SOURCE DOWN	--	1/7/2012 18:00	0.0084	--
1/7/2012 19:00	0.0087	--	1/7/2012 19:00	SOURCE DOWN	--	1/7/2012 19:00	0.0082	--
1/7/2012 20:00	0.0087	--	1/7/2012 20:00	SOURCE DOWN	--	1/7/2012 20:00	0.0080	--
1/7/2012 21:00	0.0088	--	1/7/2012 21:00	SOURCE DOWN	--	1/7/2012 21:00	0.0080	--
1/7/2012 22:00	0.0088	--	1/7/2012 22:00	SOURCE DOWN	--	1/7/2012 22:00	0.0086	--
1/7/2012 23:00	0.0088	--	1/7/2012 23:00	SOURCE DOWN	--	1/7/2012 23:00	0.0082	--
1/8/2012 0:00	0.0088	--	1/8/2012 0:00	SOURCE DOWN	--	1/8/2012 0:00	0.0083	--
1/8/2012 1:00	0.0089	--	1/8/2012 1:00	SOURCE DOWN	--	1/8/2012 1:00	0.0081	--
1/8/2012 2:00	0.0087	--	1/8/2012 2:00	SOURCE DOWN	--	1/8/2012 2:00	0.0081	--
1/8/2012 3:00	0.0087	--	1/8/2012 3:00	SOURCE DOWN	--	1/8/2012 3:00	0.0081	--
1/8/2012 4:00	0.0088	--	1/8/2012 4:00	SOURCE DOWN	--	1/8/2012 4:00	0.0082	--
1/8/2012 5:00	0.0091	--	1/8/2012 5:00	SOURCE DOWN	--	1/8/2012 5:00	0.0084	--
1/8/2012 6:00	0.0090	--	1/8/2012 6:00	SOURCE DOWN	--	1/8/2012 6:00	0.0076	--
1/8/2012 7:00	0.0087	--	1/8/2012 7:00	SOURCE DOWN	--	1/8/2012 7:00	0.0081	--
1/8/2012 8:00	0.0088	--	1/8/2012 8:00	SOURCE DOWN	--	1/8/2012 8:00	0.0084	--
1/8/2012 9:00	0.0086	--	1/8/2012 9:00	SOURCE DOWN	--	1/8/2012 9:00	0.0086	--
1/8/2012 10:00	0.0089	--	1/8/2012 10:00	SOURCE DOWN	--	1/8/2012 10:00	0.0083	--
1/8/2012 11:00	0.0091	--	1/8/2012 11:00	SOURCE DOWN	--	1/8/2012 11:00	0.0093	--
1/8/2012 12:00	0.0090	--	1/8/2012 12:00	SOURCE DOWN	--	1/8/2012 12:00	0.0084	--
1/8/2012 13:00	0.0089	--	1/8/2012 13:00	SOURCE DOWN	--	1/8/2012 13:00	0.0088	--
1/8/2012 14:00	0.0088	--	1/8/2012 14:00	SOURCE DOWN	--	1/8/2012 14:00	0.0091	--
1/8/2012 15:00	0.0087	--	1/8/2012 15:00	SOURCE DOWN	--	1/8/2012 15:00	0.0090	--
1/8/2012 16:00	0.0086	--	1/8/2012 16:00	SOURCE DOWN	--	1/8/2012 16:00	0.0092	--
1/8/2012 17:00	0.0085	--	1/8/2012 17:00	SOURCE DOWN	--	1/8/2012 17:00	0.0100	--
1/8/2012 18:00	0.0094	--	1/8/2012 18:00	SOURCE DOWN	--	1/8/2012 18:00	0.0095	--
1/8/2012 19:00	0.0088	--	1/8/2012 19:00	SOURCE DOWN	--	1/8/2012 19:00	0.0083	--

Package Boiler No. 1 EPN 81BF01			Package Boiler No. 2 EPN 50BF02			Package Boiler No. 3 EPN 50BF03		
Date	NO_X (lb/MMBtu)	NO_X (lb/MMBtu) 30-day Rolling Average	Date	NO_X (lb/MMBtu)	NO_X (lb/MMBtu) 30-day Rolling Average	Date	NO_X (lb/MMBtu)	NO_X (lb/MMBtu) 30-day Rolling Average
1/8/2012 20:00	0.0087	--	1/8/2012 20:00	SOURCE DOWN	--	1/8/2012 20:00	0.0081	--
1/8/2012 21:00	0.0087	--	1/8/2012 21:00	SOURCE DOWN	--	1/8/2012 21:00	0.0082	--
1/8/2012 22:00	0.0086	--	1/8/2012 22:00	SOURCE DOWN	--	1/8/2012 22:00	0.0089	--
1/8/2012 23:00	0.0088	--	1/8/2012 23:00	SOURCE DOWN	--	1/8/2012 23:00	0.0120	--
1/9/2012 0:00	0.0091	--	1/9/2012 0:00	SOURCE DOWN	--	1/9/2012 0:00	0.0105	--
1/9/2012 1:00	0.0089	--	1/9/2012 1:00	SOURCE DOWN	--	1/9/2012 1:00	0.0088	--
1/9/2012 2:00	0.0091	--	1/9/2012 2:00	SOURCE DOWN	--	1/9/2012 2:00	0.0087	--
1/9/2012 3:00	0.0090	--	1/9/2012 3:00	SOURCE DOWN	--	1/9/2012 3:00	0.0084	--
1/9/2012 4:00	0.0088	--	1/9/2012 4:00	SOURCE DOWN	--	1/9/2012 4:00	0.0072	--
1/9/2012 5:00	0.0088	--	1/9/2012 5:00	SOURCE DOWN	--	1/9/2012 5:00	0.0074	--
1/9/2012 6:00	0.0092	--	1/9/2012 6:00	SOURCE DOWN	--	1/9/2012 6:00	0.0090	--
1/9/2012 7:00	0.0089	--	1/9/2012 7:00	SOURCE DOWN	--	1/9/2012 7:00	0.0087	--
1/9/2012 8:00	0.0089	--	1/9/2012 8:00	SOURCE DOWN	--	1/9/2012 8:00	0.0083	--
1/9/2012 9:00	0.0090	--	1/9/2012 9:00	SOURCE DOWN	--	1/9/2012 9:00	0.0078	--
1/9/2012 10:00	0.0118	--	1/9/2012 10:00	SOURCE DOWN	--	1/9/2012 10:00	0.0124	--
1/9/2012 11:00	0.0116	--	1/9/2012 11:00	SOURCE DOWN	--	1/9/2012 11:00	0.0079	--
1/9/2012 12:00	0.0111	--	1/9/2012 12:00	SOURCE DOWN	--	1/9/2012 12:00	0.0069	--
1/9/2012 13:00	0.0100	--	1/9/2012 13:00	SOURCE DOWN	--	1/9/2012 13:00	0.0069	--
1/9/2012 14:00	0.0101	--	1/9/2012 14:00	SOURCE DOWN	--	1/9/2012 14:00	0.0068	--
1/9/2012 15:00	0.0097	--	1/9/2012 15:00	SOURCE DOWN	--	1/9/2012 15:00	0.0074	--
1/9/2012 16:00	0.0089	--	1/9/2012 16:00	SOURCE DOWN	--	1/9/2012 16:00	0.0068	--
1/9/2012 17:00	0.0082	--	1/9/2012 17:00	SOURCE DOWN	--	1/9/2012 17:00	0.0070	--
1/9/2012 18:00	0.0086	--	1/9/2012 18:00	SOURCE DOWN	--	1/9/2012 18:00	0.0069	--
1/9/2012 19:00	0.0085	--	1/9/2012 19:00	SOURCE DOWN	--	1/9/2012 19:00	0.0069	--
1/9/2012 20:00	0.0086	--	1/9/2012 20:00	SOURCE DOWN	--	1/9/2012 20:00	0.0067	--
1/9/2012 21:00	0.0087	--	1/9/2012 21:00	SOURCE DOWN	--	1/9/2012 21:00	0.0069	--
1/9/2012 22:00	0.0085	--	1/9/2012 22:00	SOURCE DOWN	--	1/9/2012 22:00	0.0065	--
1/9/2012 23:00	0.0087	--	1/9/2012 23:00	SOURCE DOWN	--	1/9/2012 23:00	0.0069	--
1/10/2012 0:00	0.0088	--	1/10/2012 0:00	SOURCE DOWN	--	1/10/2012 0:00	0.0073	--
1/10/2012 1:00	0.0087	--	1/10/2012 1:00	SOURCE DOWN	--	1/10/2012 1:00	0.0072	--
1/10/2012 2:00	0.0087	--	1/10/2012 2:00	SOURCE DOWN	--	1/10/2012 2:00	0.0070	--
1/10/2012 3:00	0.0087	--	1/10/2012 3:00	SOURCE DOWN	--	1/10/2012 3:00	0.0073	--
1/10/2012 4:00	0.0088	--	1/10/2012 4:00	SOURCE DOWN	--	1/10/2012 4:00	0.0076	--
1/10/2012 5:00	0.0089	--	1/10/2012 5:00	SOURCE DOWN	--	1/10/2012 5:00	0.0074	--
1/10/2012 6:00	0.0092	--	1/10/2012 6:00	SOURCE DOWN	--	1/10/2012 6:00	0.0077	--
1/10/2012 7:00	0.0087	--	1/10/2012 7:00	SOURCE DOWN	--	1/10/2012 7:00	0.0072	--
1/10/2012 8:00	0.0088	--	1/10/2012 8:00	SOURCE DOWN	--	1/10/2012 8:00	0.0074	--
1/10/2012 9:00	0.0090	--	1/10/2012 9:00	SOURCE DOWN	--	1/10/2012 9:00	0.0073	--
1/10/2012 10:00	0.0089	--	1/10/2012 10:00	SOURCE DOWN	--	1/10/2012 10:00	0.0070	--
1/10/2012 11:00	0.0086	--	1/10/2012 11:00	SOURCE DOWN	--	1/10/2012 11:00	0.0067	--
1/10/2012 12:00	0.0088	--	1/10/2012 12:00	SOURCE DOWN	--	1/10/2012 12:00	0.0069	--

Package Boiler No. 1 EPN 81BF01			Package Boiler No. 2 EPN 50BF02			Package Boiler No. 3 EPN 50BF03		
Date	NO_X (lb/MMBtu)	NO_X (lb/MMBtu) 30-day Rolling Average	Date	NO_X (lb/MMBtu)	NO_X (lb/MMBtu) 30-day Rolling Average	Date	NO_X (lb/MMBtu)	NO_X (lb/MMBtu) 30-day Rolling Average
1/10/2012 13:00	0.0090	--	1/10/2012 13:00	SOURCE DOWN	--	1/10/2012 13:00	0.0068	--
1/10/2012 14:00	0.0087	--	1/10/2012 14:00	SOURCE DOWN	--	1/10/2012 14:00	0.0068	--
1/10/2012 15:00	0.0090	--	1/10/2012 15:00	SOURCE DOWN	--	1/10/2012 15:00	0.0071	--
1/10/2012 16:00	0.0082	--	1/10/2012 16:00	SOURCE DOWN	--	1/10/2012 16:00	0.0065	--
1/10/2012 17:00	0.0084	--	1/10/2012 17:00	SOURCE DOWN	--	1/10/2012 17:00	0.0068	--
1/10/2012 18:00	0.0083	--	1/10/2012 18:00	SOURCE DOWN	--	1/10/2012 18:00	0.0069	--
1/10/2012 19:00	0.0082	--	1/10/2012 19:00	SOURCE DOWN	--	1/10/2012 19:00	0.0066	--
1/10/2012 20:00	0.0082	--	1/10/2012 20:00	SOURCE DOWN	--	1/10/2012 20:00	0.0068	--
1/10/2012 21:00	0.0084	--	1/10/2012 21:00	SOURCE DOWN	--	1/10/2012 21:00	0.0067	--
1/10/2012 22:00	0.0087	--	1/10/2012 22:00	SOURCE DOWN	--	1/10/2012 22:00	0.0071	--
1/10/2012 23:00	0.0090	--	1/10/2012 23:00	SOURCE DOWN	--	1/10/2012 23:00	0.0069	--
1/11/2012 0:00	0.0085	--	1/11/2012 0:00	SOURCE DOWN	--	1/11/2012 0:00	0.0069	--
1/11/2012 1:00	0.0085	--	1/11/2012 1:00	SOURCE DOWN	--	1/11/2012 1:00	0.0067	--
1/11/2012 2:00	0.0084	--	1/11/2012 2:00	SOURCE DOWN	--	1/11/2012 2:00	0.0068	--
1/11/2012 3:00	0.0084	--	1/11/2012 3:00	SOURCE DOWN	--	1/11/2012 3:00	0.0068	--
1/11/2012 4:00	0.0085	--	1/11/2012 4:00	SOURCE DOWN	--	1/11/2012 4:00	0.0068	--
1/11/2012 5:00	0.0085	--	1/11/2012 5:00	SOURCE DOWN	--	1/11/2012 5:00	0.0069	--
1/11/2012 6:00	0.0090	--	1/11/2012 6:00	SOURCE DOWN	--	1/11/2012 6:00	0.0070	--
1/11/2012 7:00	0.0087	--	1/11/2012 7:00	SOURCE DOWN	--	1/11/2012 7:00	0.0070	--
1/11/2012 8:00	0.0087	--	1/11/2012 8:00	SOURCE DOWN	--	1/11/2012 8:00	0.0069	--
1/11/2012 9:00	0.0089	--	1/11/2012 9:00	SOURCE DOWN	--	1/11/2012 9:00	0.0073	--
1/11/2012 10:00	0.0087	--	1/11/2012 10:00	SOURCE DOWN	--	1/11/2012 10:00	0.0072	--
1/11/2012 11:00	0.0085	--	1/11/2012 11:00	SOURCE DOWN	--	1/11/2012 11:00	0.0072	--
1/11/2012 12:00	0.0091	--	1/11/2012 12:00	SOURCE DOWN	--	1/11/2012 12:00	0.0072	--
1/11/2012 13:00	0.0087	--	1/11/2012 13:00	SOURCE DOWN	--	1/11/2012 13:00	0.0068	--
1/11/2012 14:00	0.0087	--	1/11/2012 14:00	SOURCE DOWN	--	1/11/2012 14:00	0.0071	--
1/11/2012 15:00	0.0092	--	1/11/2012 15:00	SOURCE DOWN	--	1/11/2012 15:00	0.0077	--
1/11/2012 16:00	0.0083	--	1/11/2012 16:00	SOURCE DOWN	--	1/11/2012 16:00	0.0068	--
1/11/2012 17:00	0.0083	--	1/11/2012 17:00	SOURCE DOWN	--	1/11/2012 17:00	0.0068	--
1/11/2012 18:00	0.0085	--	1/11/2012 18:00	SOURCE DOWN	--	1/11/2012 18:00	0.0068	--
1/11/2012 19:00	0.0083	--	1/11/2012 19:00	SOURCE DOWN	--	1/11/2012 19:00	0.0069	--
1/11/2012 20:00	0.0082	--	1/11/2012 20:00	SOURCE DOWN	--	1/11/2012 20:00	0.0066	--
1/11/2012 21:00	0.0084	--	1/11/2012 21:00	SOURCE DOWN	--	1/11/2012 21:00	0.0068	--
1/11/2012 22:00	0.0085	--	1/11/2012 22:00	SOURCE DOWN	--	1/11/2012 22:00	0.0070	--
1/11/2012 23:00	0.0087	--	1/11/2012 23:00	SOURCE DOWN	--	1/11/2012 23:00	0.0071	--
1/12/2012 0:00	0.0087	--	1/12/2012 0:00	SOURCE DOWN	--	1/12/2012 0:00	0.0070	--
1/12/2012 1:00	0.0086	--	1/12/2012 1:00	SOURCE DOWN	--	1/12/2012 1:00	0.0072	--
1/12/2012 2:00	0.0085	--	1/12/2012 2:00	SOURCE DOWN	--	1/12/2012 2:00	0.0069	--
1/12/2012 3:00	0.0085	--	1/12/2012 3:00	SOURCE DOWN	--	1/12/2012 3:00	0.0069	--
1/12/2012 4:00	0.0085	--	1/12/2012 4:00	SOURCE DOWN	--	1/12/2012 4:00	0.0070	--
1/12/2012 5:00	0.0084	--	1/12/2012 5:00	SOURCE DOWN	--	1/12/2012 5:00	0.0073	--

Package Boiler No. 1 EPN 81BF01			Package Boiler No. 2 EPN 50BF02			Package Boiler No. 3 EPN 50BF03		
Date	NO_X (lb/MMBtu)	NO_X (lb/MMBtu) 30-day Rolling Average	Date	NO_X (lb/MMBtu)	NO_X (lb/MMBtu) 30-day Rolling Average	Date	NO_X (lb/MMBtu)	NO_X (lb/MMBtu) 30-day Rolling Average
1/12/2012 6:00	0.0085	--	1/12/2012 6:00	SOURCE DOWN	--	1/12/2012 6:00	0.0154	--
1/12/2012 7:00	0.0084	--	1/12/2012 7:00	SOURCE DOWN	--	1/12/2012 7:00	0.0072	--
1/12/2012 8:00	0.0088	--	1/12/2012 8:00	SOURCE DOWN	--	1/12/2012 8:00	0.0072	--
1/12/2012 9:00	0.0092	--	1/12/2012 9:00	SOURCE DOWN	--	1/12/2012 9:00	0.0069	--
1/12/2012 10:00	0.0087	--	1/12/2012 10:00	SOURCE DOWN	--	1/12/2012 10:00	0.0069	--
1/12/2012 11:00	0.0087	--	1/12/2012 11:00	SOURCE DOWN	--	1/12/2012 11:00	0.0069	--
1/12/2012 12:00	0.0089	--	1/12/2012 12:00	SOURCE DOWN	--	1/12/2012 12:00	0.0070	--
1/12/2012 13:00	0.0088	--	1/12/2012 13:00	SOURCE DOWN	--	1/12/2012 13:00	0.0069	--
1/12/2012 14:00	0.0087	--	1/12/2012 14:00	SOURCE DOWN	--	1/12/2012 14:00	0.0070	--
1/12/2012 15:00	0.0086	--	1/12/2012 15:00	SOURCE DOWN	--	1/12/2012 15:00	0.0069	--
1/12/2012 16:00	0.0085	--	1/12/2012 16:00	SOURCE DOWN	--	1/12/2012 16:00	0.0067	--
1/12/2012 17:00	0.0086	--	1/12/2012 17:00	SOURCE DOWN	--	1/12/2012 17:00	0.0068	--
1/12/2012 18:00	0.0086	--	1/12/2012 18:00	SOURCE DOWN	--	1/12/2012 18:00	0.0068	--
1/12/2012 19:00	0.0085	--	1/12/2012 19:00	SOURCE DOWN	--	1/12/2012 19:00	0.0069	--
1/12/2012 20:00	0.0086	--	1/12/2012 20:00	SOURCE DOWN	--	1/12/2012 20:00	0.0068	--
1/12/2012 21:00	0.0085	--	1/12/2012 21:00	SOURCE DOWN	--	1/12/2012 21:00	0.0069	--
1/12/2012 22:00	0.0084	--	1/12/2012 22:00	SOURCE DOWN	--	1/12/2012 22:00	0.0067	--
1/12/2012 23:00	0.0086	--	1/12/2012 23:00	SOURCE DOWN	--	1/12/2012 23:00	0.0069	--
1/13/2012 0:00	0.0090	--	1/13/2012 0:00	SOURCE DOWN	--	1/13/2012 0:00	0.0067	--
1/13/2012 1:00	0.0090	--	1/13/2012 1:00	SOURCE DOWN	--	1/13/2012 1:00	0.0068	--
1/13/2012 2:00	0.0093	--	1/13/2012 2:00	SOURCE DOWN	--	1/13/2012 2:00	0.0070	--
1/13/2012 3:00	0.0093	--	1/13/2012 3:00	SOURCE DOWN	--	1/13/2012 3:00	0.0068	--
1/13/2012 4:00	0.0091	--	1/13/2012 4:00	SOURCE DOWN	--	1/13/2012 4:00	0.0068	--
1/13/2012 5:00	0.0093	--	1/13/2012 5:00	SOURCE DOWN	--	1/13/2012 5:00	0.0070	--
1/13/2012 6:00	0.0093	--	1/13/2012 6:00	SOURCE DOWN	--	1/13/2012 6:00	0.0077	--
1/13/2012 7:00	DOWNTIME	--	1/13/2012 7:00	SOURCE DOWN	--	1/13/2012 7:00	0.0067	--
1/13/2012 8:00	0.0093	--	1/13/2012 8:00	SOURCE DOWN	--	1/13/2012 8:00	0.0071	--
1/13/2012 9:00	0.0097	--	1/13/2012 9:00	SOURCE DOWN	--	1/13/2012 9:00	0.0069	--
1/13/2012 10:00	0.0094	--	1/13/2012 10:00	SOURCE DOWN	--	1/13/2012 10:00	0.0069	--
1/13/2012 11:00	0.0093	--	1/13/2012 11:00	SOURCE DOWN	--	1/13/2012 11:00	0.0067	--
1/13/2012 12:00	0.0091	--	1/13/2012 12:00	SOURCE DOWN	--	1/13/2012 12:00	0.0069	--
1/13/2012 13:00	0.0091	--	1/13/2012 13:00	SOURCE DOWN	--	1/13/2012 13:00	0.0067	--
1/13/2012 14:00	0.0093	--	1/13/2012 14:00	SOURCE DOWN	--	1/13/2012 14:00	0.0070	--
1/13/2012 15:00	0.0092	--	1/13/2012 15:00	SOURCE DOWN	--	1/13/2012 15:00	0.0067	--
1/13/2012 16:00	0.0092	--	1/13/2012 16:00	SOURCE DOWN	--	1/13/2012 16:00	0.0067	--
1/13/2012 17:00	0.0090	--	1/13/2012 17:00	SOURCE DOWN	--	1/13/2012 17:00	0.0068	--
1/13/2012 18:00	0.0088	--	1/13/2012 18:00	SOURCE DOWN	--	1/13/2012 18:00	0.0066	--
1/13/2012 19:00	0.0092	--	1/13/2012 19:00	SOURCE DOWN	--	1/13/2012 19:00	0.0068	--
1/13/2012 20:00	0.0092	--	1/13/2012 20:00	SOURCE DOWN	--	1/13/2012 20:00	0.0067	--
1/13/2012 21:00	0.0091	--	1/13/2012 21:00	SOURCE DOWN	--	1/13/2012 21:00	0.0067	--
1/13/2012 22:00	0.0090	--	1/13/2012 22:00	SOURCE DOWN	--	1/13/2012 22:00	0.0068	--

Package Boiler No. 1 EPN 81BF01			Package Boiler No. 2 EPN 50BF02			Package Boiler No. 3 EPN 50BF03		
Date	NO_X (lb/MMBtu)	NO_X (lb/MMBtu) 30-day Rolling Average	Date	NO_X (lb/MMBtu)	NO_X (lb/MMBtu) 30-day Rolling Average	Date	NO_X (lb/MMBtu)	NO_X (lb/MMBtu) 30-day Rolling Average
1/13/2012 23:00	0.0089	--	1/13/2012 23:00	SOURCE DOWN	--	1/13/2012 23:00	0.0068	--
1/14/2012 0:00	0.0091	--	1/14/2012 0:00	SOURCE DOWN	--	1/14/2012 0:00	0.0068	--
1/14/2012 1:00	0.0090	--	1/14/2012 1:00	SOURCE DOWN	--	1/14/2012 1:00	0.0066	--
1/14/2012 2:00	0.0093	--	1/14/2012 2:00	SOURCE DOWN	--	1/14/2012 2:00	0.0068	--
1/14/2012 3:00	0.0092	--	1/14/2012 3:00	SOURCE DOWN	--	1/14/2012 3:00	0.0069	--
1/14/2012 4:00	0.0092	--	1/14/2012 4:00	SOURCE DOWN	--	1/14/2012 4:00	0.0068	--
1/14/2012 5:00	0.0091	--	1/14/2012 5:00	SOURCE DOWN	--	1/14/2012 5:00	0.0068	--
1/14/2012 6:00	0.0095	--	1/14/2012 6:00	SOURCE DOWN	--	1/14/2012 6:00	0.0066	--
1/14/2012 7:00	0.0091	--	1/14/2012 7:00	SOURCE DOWN	--	1/14/2012 7:00	0.0068	--
1/14/2012 8:00	0.0092	--	1/14/2012 8:00	SOURCE DOWN	--	1/14/2012 8:00	0.0069	--
1/14/2012 9:00	0.0093	--	1/14/2012 9:00	SOURCE DOWN	--	1/14/2012 9:00	0.0068	--
1/14/2012 10:00	0.0094	--	1/14/2012 10:00	SOURCE DOWN	--	1/14/2012 10:00	0.0070	--
1/14/2012 11:00	0.0095	--	1/14/2012 11:00	SOURCE DOWN	--	1/14/2012 11:00	0.0068	--
1/14/2012 12:00	0.0092	--	1/14/2012 12:00	SOURCE DOWN	--	1/14/2012 12:00	0.0069	--
1/14/2012 13:00	0.0093	--	1/14/2012 13:00	SOURCE DOWN	--	1/14/2012 13:00	0.0065	--
1/14/2012 14:00	0.0092	--	1/14/2012 14:00	SOURCE DOWN	--	1/14/2012 14:00	0.0069	--
1/14/2012 15:00	0.0092	--	1/14/2012 15:00	SOURCE DOWN	--	1/14/2012 15:00	0.0070	--
1/14/2012 16:00	0.0092	--	1/14/2012 16:00	SOURCE DOWN	--	1/14/2012 16:00	0.0066	--
1/14/2012 17:00	0.0092	--	1/14/2012 17:00	SOURCE DOWN	--	1/14/2012 17:00	0.0069	--
1/14/2012 18:00	0.0092	--	1/14/2012 18:00	SOURCE DOWN	--	1/14/2012 18:00	0.0068	--
1/14/2012 19:00	0.0087	--	1/14/2012 19:00	SOURCE DOWN	--	1/14/2012 19:00	0.0065	--
1/14/2012 20:00	0.0089	--	1/14/2012 20:00	SOURCE DOWN	--	1/14/2012 20:00	0.0067	--
1/14/2012 21:00	0.0090	--	1/14/2012 21:00	SOURCE DOWN	--	1/14/2012 21:00	0.0068	--
1/14/2012 22:00	0.0092	--	1/14/2012 22:00	SOURCE DOWN	--	1/14/2012 22:00	0.0069	--
1/14/2012 23:00	0.0092	--	1/14/2012 23:00	SOURCE DOWN	--	1/14/2012 23:00	0.0069	--
1/15/2012 0:00	0.0091	--	1/15/2012 0:00	SOURCE DOWN	--	1/15/2012 0:00	0.0067	--
1/15/2012 1:00	0.0089	--	1/15/2012 1:00	SOURCE DOWN	--	1/15/2012 1:00	0.0067	--
1/15/2012 2:00	0.0091	--	1/15/2012 2:00	SOURCE DOWN	--	1/15/2012 2:00	0.0068	--
1/15/2012 3:00	0.0092	--	1/15/2012 3:00	SOURCE DOWN	--	1/15/2012 3:00	0.0068	--
1/15/2012 4:00	0.0092	--	1/15/2012 4:00	SOURCE DOWN	--	1/15/2012 4:00	0.0068	--
1/15/2012 5:00	0.0086	--	1/15/2012 5:00	SOURCE DOWN	--	1/15/2012 5:00	0.0067	--
1/15/2012 6:00	0.0092	--	1/15/2012 6:00	SOURCE DOWN	--	1/15/2012 6:00	0.0071	--
1/15/2012 7:00	0.0092	--	1/15/2012 7:00	SOURCE DOWN	--	1/15/2012 7:00	0.0067	--
1/15/2012 8:00	0.0093	--	1/15/2012 8:00	SOURCE DOWN	--	1/15/2012 8:00	0.0067	--
1/15/2012 9:00	0.0093	--	1/15/2012 9:00	SOURCE DOWN	--	1/15/2012 9:00	0.0068	--
1/15/2012 10:00	0.0094	--	1/15/2012 10:00	SOURCE DOWN	--	1/15/2012 10:00	0.0069	--
1/15/2012 11:00	0.0094	--	1/15/2012 11:00	SOURCE DOWN	--	1/15/2012 11:00	0.0066	--
1/15/2012 12:00	0.0095	--	1/15/2012 12:00	SOURCE DOWN	--	1/15/2012 12:00	0.0072	--
1/15/2012 13:00	0.0093	--	1/15/2012 13:00	SOURCE DOWN	--	1/15/2012 13:00	0.0067	--
1/15/2012 14:00	0.0089	--	1/15/2012 14:00	SOURCE DOWN	--	1/15/2012 14:00	0.0066	--
1/15/2012 15:00	0.0091	--	1/15/2012 15:00	SOURCE DOWN	--	1/15/2012 15:00	0.0067	--

Package Boiler No. 1 EPN 81BF01			Package Boiler No. 2 EPN 50BF02			Package Boiler No. 3 EPN 50BF03		
Date	NO_X (lb/MMBtu)	NO_X (lb/MMBtu) 30-day Rolling Average	Date	NO_X (lb/MMBtu)	NO_X (lb/MMBtu) 30-day Rolling Average	Date	NO_X (lb/MMBtu)	NO_X (lb/MMBtu) 30-day Rolling Average
1/15/2012 16:00	0.0091	--	1/15/2012 16:00	SOURCE DOWN	--	1/15/2012 16:00	0.0068	--
1/15/2012 17:00	0.0091	--	1/15/2012 17:00	SOURCE DOWN	--	1/15/2012 17:00	0.0068	--
1/15/2012 18:00	0.0089	--	1/15/2012 18:00	SOURCE DOWN	--	1/15/2012 18:00	0.0069	--
1/15/2012 19:00	0.0093	--	1/15/2012 19:00	SOURCE DOWN	--	1/15/2012 19:00	0.0068	--
1/15/2012 20:00	0.0090	--	1/15/2012 20:00	SOURCE DOWN	--	1/15/2012 20:00	0.0067	--
1/15/2012 21:00	0.0092	--	1/15/2012 21:00	SOURCE DOWN	--	1/15/2012 21:00	0.0069	--
1/15/2012 22:00	0.0091	--	1/15/2012 22:00	SOURCE DOWN	--	1/15/2012 22:00	0.0070	--
1/15/2012 23:00	0.0091	--	1/15/2012 23:00	SOURCE DOWN	--	1/15/2012 23:00	0.0068	--
1/16/2012 0:00	0.0092	--	1/16/2012 0:00	SOURCE DOWN	--	1/16/2012 0:00	0.0068	--
1/16/2012 1:00	0.0091	--	1/16/2012 1:00	SOURCE DOWN	--	1/16/2012 1:00	0.0067	--
1/16/2012 2:00	0.0092	--	1/16/2012 2:00	SOURCE DOWN	--	1/16/2012 2:00	0.0068	--
1/16/2012 3:00	0.0091	--	1/16/2012 3:00	SOURCE DOWN	--	1/16/2012 3:00	0.0069	--
1/16/2012 4:00	0.0092	--	1/16/2012 4:00	SOURCE DOWN	--	1/16/2012 4:00	0.0068	--
1/16/2012 5:00	0.0091	--	1/16/2012 5:00	SOURCE DOWN	--	1/16/2012 5:00	0.0069	--
1/16/2012 6:00	0.0092	--	1/16/2012 6:00	SOURCE DOWN	--	1/16/2012 6:00	0.0070	--
1/16/2012 7:00	0.0092	--	1/16/2012 7:00	SOURCE DOWN	--	1/16/2012 7:00	0.0081	--
1/16/2012 8:00	0.0092	--	1/16/2012 8:00	SOURCE DOWN	--	1/16/2012 8:00	0.0082	--
1/16/2012 9:00	0.0092	--	1/16/2012 9:00	SOURCE DOWN	--	1/16/2012 9:00	0.0082	--
1/16/2012 10:00	0.0095	--	1/16/2012 10:00	SOURCE DOWN	--	1/16/2012 10:00	0.0087	--
1/16/2012 11:00	0.0094	--	1/16/2012 11:00	SOURCE DOWN	--	1/16/2012 11:00	0.0084	--
1/16/2012 12:00	0.0092	--	1/16/2012 12:00	SOURCE DOWN	--	1/16/2012 12:00	0.0081	--
1/16/2012 13:00	0.0092	--	1/16/2012 13:00	SOURCE DOWN	--	1/16/2012 13:00	0.0084	--
1/16/2012 14:00	0.0091	--	1/16/2012 14:00	SOURCE DOWN	--	1/16/2012 14:00	0.0080	--
1/16/2012 15:00	0.0092	--	1/16/2012 15:00	SOURCE DOWN	--	1/16/2012 15:00	0.0083	--
1/16/2012 16:00	0.0092	--	1/16/2012 16:00	SOURCE DOWN	--	1/16/2012 16:00	0.0082	--
1/16/2012 17:00	0.0091	--	1/16/2012 17:00	SOURCE DOWN	--	1/16/2012 17:00	0.0083	--
1/16/2012 18:00	0.0091	--	1/16/2012 18:00	SOURCE DOWN	--	1/16/2012 18:00	0.0086	--
1/16/2012 19:00	0.0092	--	1/16/2012 19:00	SOURCE DOWN	--	1/16/2012 19:00	0.0089	--
1/16/2012 20:00	0.0092	--	1/16/2012 20:00	SOURCE DOWN	--	1/16/2012 20:00	0.0085	--
1/16/2012 21:00	0.0088	--	1/16/2012 21:00	SOURCE DOWN	--	1/16/2012 21:00	0.0086	--
1/16/2012 22:00	0.0092	--	1/16/2012 22:00	SOURCE DOWN	--	1/16/2012 22:00	0.0098	--
1/16/2012 23:00	0.0094	--	1/16/2012 23:00	SOURCE DOWN	--	1/16/2012 23:00	0.0087	--
1/17/2012 0:00	0.0093	--	1/17/2012 0:00	SOURCE DOWN	--	1/17/2012 0:00	0.0093	--
1/17/2012 1:00	0.0093	--	1/17/2012 1:00	SOURCE DOWN	--	1/17/2012 1:00	0.0088	--
1/17/2012 2:00	0.0091	--	1/17/2012 2:00	SOURCE DOWN	--	1/17/2012 2:00	0.0093	--
1/17/2012 3:00	0.0092	--	1/17/2012 3:00	SOURCE DOWN	--	1/17/2012 3:00	0.0086	--
1/17/2012 4:00	0.0093	--	1/17/2012 4:00	SOURCE DOWN	--	1/17/2012 4:00	0.0089	--
1/17/2012 5:00	0.0093	--	1/17/2012 5:00	SOURCE DOWN	--	1/17/2012 5:00	0.0093	--
1/17/2012 6:00	0.0094	--	1/17/2012 6:00	SOURCE DOWN	--	1/17/2012 6:00	0.0106	--
1/17/2012 7:00	0.0093	--	1/17/2012 7:00	SOURCE DOWN	--	1/17/2012 7:00	0.0091	--
1/17/2012 8:00	0.0093	--	1/17/2012 8:00	SOURCE DOWN	--	1/17/2012 8:00	0.0090	--

Package Boiler No. 1 EPN 81BF01			Package Boiler No. 2 EPN 50BF02			Package Boiler No. 3 EPN 50BF03		
Date	NO_X (lb/MMBtu)	NO_X (lb/MMBtu) 30-day Rolling Average	Date	NO_X (lb/MMBtu)	NO_X (lb/MMBtu) 30-day Rolling Average	Date	NO_X (lb/MMBtu)	NO_X (lb/MMBtu) 30-day Rolling Average
1/17/2012 9:00	0.0089	--	1/17/2012 9:00	SOURCE DOWN	--	1/17/2012 9:00	0.0082	--
1/17/2012 10:00	0.0088	--	1/17/2012 10:00	SOURCE DOWN	--	1/17/2012 10:00	0.0084	--
1/17/2012 11:00	0.0088	--	1/17/2012 11:00	SOURCE DOWN	--	1/17/2012 11:00	0.0104	--
1/17/2012 12:00	0.0095	--	1/17/2012 12:00	SOURCE DOWN	--	1/17/2012 12:00	0.0103	--
1/17/2012 13:00	0.0097	--	1/17/2012 13:00	SOURCE DOWN	--	1/17/2012 13:00	0.0084	--
1/17/2012 14:00	0.0088	--	1/17/2012 14:00	SOURCE DOWN	--	1/17/2012 14:00	0.0082	--
1/17/2012 15:00	0.0089	--	1/17/2012 15:00	SOURCE DOWN	--	1/17/2012 15:00	0.0089	--
1/17/2012 16:00	0.0090	--	1/17/2012 16:00	SOURCE DOWN	--	1/17/2012 16:00	0.0083	--
1/17/2012 17:00	0.0099	--	1/17/2012 17:00	SOURCE DOWN	--	1/17/2012 17:00	0.0086	--
1/17/2012 18:00	0.0098	--	1/17/2012 18:00	SOURCE DOWN	--	1/17/2012 18:00	0.0090	--
1/17/2012 19:00	0.0092	--	1/17/2012 19:00	SOURCE DOWN	--	1/17/2012 19:00	0.0084	--
1/17/2012 20:00	0.0092	--	1/17/2012 20:00	SOURCE DOWN	--	1/17/2012 20:00	0.0090	--
1/17/2012 21:00	0.0091	--	1/17/2012 21:00	SOURCE DOWN	--	1/17/2012 21:00	0.0082	--
1/17/2012 22:00	0.0091	--	1/17/2012 22:00	SOURCE DOWN	--	1/17/2012 22:00	0.0076	--
1/17/2012 23:00	0.0091	--	1/17/2012 23:00	SOURCE DOWN	--	1/17/2012 23:00	0.0076	--
1/18/2012 0:00	0.0091	--	1/18/2012 0:00	SOURCE DOWN	--	1/18/2012 0:00	0.0076	--
1/18/2012 1:00	0.0091	--	1/18/2012 1:00	SOURCE DOWN	--	1/18/2012 1:00	0.0076	--
1/18/2012 2:00	0.0090	--	1/18/2012 2:00	SOURCE DOWN	--	1/18/2012 2:00	0.0075	--
1/18/2012 3:00	0.0091	--	1/18/2012 3:00	SOURCE DOWN	--	1/18/2012 3:00	0.0074	--
1/18/2012 4:00	0.0091	--	1/18/2012 4:00	SOURCE DOWN	--	1/18/2012 4:00	0.0075	--
1/18/2012 5:00	0.0091	--	1/18/2012 5:00	SOURCE DOWN	--	1/18/2012 5:00	0.0073	--
1/18/2012 6:00	0.0091	--	1/18/2012 6:00	SOURCE DOWN	--	1/18/2012 6:00	0.0084	--
1/18/2012 7:00	0.0088	--	1/18/2012 7:00	SOURCE DOWN	--	1/18/2012 7:00	0.0074	--
1/18/2012 8:00	0.0089	--	1/18/2012 8:00	SOURCE DOWN	--	1/18/2012 8:00	0.0074	--
1/18/2012 9:00	0.0090	--	1/18/2012 9:00	SOURCE DOWN	--	1/18/2012 9:00	0.0075	--
1/18/2012 10:00	0.0091	--	1/18/2012 10:00	SOURCE DOWN	--	1/18/2012 10:00	0.0076	--
1/18/2012 11:00	0.0090	--	1/18/2012 11:00	SOURCE DOWN	--	1/18/2012 11:00	0.0071	--
1/18/2012 12:00	0.0090	--	1/18/2012 12:00	SOURCE DOWN	--	1/18/2012 12:00	0.0074	--
1/18/2012 13:00	0.0090	--	1/18/2012 13:00	SOURCE DOWN	--	1/18/2012 13:00	0.0072	--
1/18/2012 14:00	0.0088	--	1/18/2012 14:00	SOURCE DOWN	--	1/18/2012 14:00	0.0075	--
1/18/2012 15:00	0.0085	--	1/18/2012 15:00	SOURCE DOWN	--	1/18/2012 15:00	0.0073	--
1/18/2012 16:00	0.0091	--	1/18/2012 16:00	SOURCE DOWN	--	1/18/2012 16:00	0.0075	--
1/18/2012 17:00	0.0091	--	1/18/2012 17:00	SOURCE DOWN	--	1/18/2012 17:00	0.0074	--
1/18/2012 18:00	0.0091	--	1/18/2012 18:00	SOURCE DOWN	--	1/18/2012 18:00	0.0074	--
1/18/2012 19:00	0.0085	--	1/18/2012 19:00	SOURCE DOWN	--	1/18/2012 19:00	0.0071	--
1/18/2012 20:00	0.0085	--	1/18/2012 20:00	SOURCE DOWN	--	1/18/2012 20:00	0.0072	--
1/18/2012 21:00	0.0087	--	1/18/2012 21:00	SOURCE DOWN	--	1/18/2012 21:00	0.0073	--
1/18/2012 22:00	0.0088	--	1/18/2012 22:00	SOURCE DOWN	--	1/18/2012 22:00	0.0073	--
1/18/2012 23:00	0.0088	--	1/18/2012 23:00	SOURCE DOWN	--	1/18/2012 23:00	0.0073	--
1/19/2012 0:00	0.0091	--	1/19/2012 0:00	SOURCE DOWN	--	1/19/2012 0:00	0.0077	--
1/19/2012 1:00	0.0090	--	1/19/2012 1:00	SOURCE DOWN	--	1/19/2012 1:00	0.0073	--

Package Boiler No. 1 EPN 81BF01			Package Boiler No. 2 EPN 50BF02			Package Boiler No. 3 EPN 50BF03		
Date	NO_X (lb/MMBtu)	NO_X (lb/MMBtu) 30-day Rolling Average	Date	NO_X (lb/MMBtu)	NO_X (lb/MMBtu) 30-day Rolling Average	Date	NO_X (lb/MMBtu)	NO_X (lb/MMBtu) 30-day Rolling Average
1/19/2012 2:00	0.0089	--	1/19/2012 2:00	SOURCE DOWN	--	1/19/2012 2:00	0.0073	--
1/19/2012 3:00	0.0088	--	1/19/2012 3:00	SOURCE DOWN	--	1/19/2012 3:00	0.0073	--
1/19/2012 4:00	0.0089	--	1/19/2012 4:00	SOURCE DOWN	--	1/19/2012 4:00	0.0072	--
1/19/2012 5:00	0.0088	--	1/19/2012 5:00	SOURCE DOWN	--	1/19/2012 5:00	0.0073	--
1/19/2012 6:00	0.0091	--	1/19/2012 6:00	SOURCE DOWN	--	1/19/2012 6:00	0.0077	--
1/19/2012 7:00	0.0089	--	1/19/2012 7:00	SOURCE DOWN	--	1/19/2012 7:00	0.0070	--
1/19/2012 8:00	0.0089	--	1/19/2012 8:00	SOURCE DOWN	--	1/19/2012 8:00	0.0072	--
1/19/2012 9:00	0.0088	--	1/19/2012 9:00	SOURCE DOWN	--	1/19/2012 9:00	0.0071	--
1/19/2012 10:00	0.0088	--	1/19/2012 10:00	SOURCE DOWN	--	1/19/2012 10:00	0.0072	--
1/19/2012 11:00	0.0088	--	1/19/2012 11:00	SOURCE DOWN	--	1/19/2012 11:00	0.0069	--
1/19/2012 12:00	0.0089	--	1/19/2012 12:00	SOURCE DOWN	--	1/19/2012 12:00	0.0071	--
1/19/2012 13:00	0.0091	--	1/19/2012 13:00	SOURCE DOWN	--	1/19/2012 13:00	0.0073	--
1/19/2012 14:00	0.0090	--	1/19/2012 14:00	SOURCE DOWN	--	1/19/2012 14:00	0.0072	--
1/19/2012 15:00	0.0087	--	1/19/2012 15:00	SOURCE DOWN	--	1/19/2012 15:00	0.0069	--
1/19/2012 16:00	0.0087	--	1/19/2012 16:00	SOURCE DOWN	--	1/19/2012 16:00	0.0072	--
1/19/2012 17:00	0.0086	--	1/19/2012 17:00	SOURCE DOWN	--	1/19/2012 17:00	0.0071	--
1/19/2012 18:00	0.0088	--	1/19/2012 18:00	SOURCE DOWN	--	1/19/2012 18:00	0.0072	--
1/19/2012 19:00	0.0088	--	1/19/2012 19:00	SOURCE DOWN	--	1/19/2012 19:00	0.0073	--
1/19/2012 20:00	0.0088	--	1/19/2012 20:00	SOURCE DOWN	--	1/19/2012 20:00	0.0074	--
1/19/2012 21:00	0.0088	--	1/19/2012 21:00	SOURCE DOWN	--	1/19/2012 21:00	0.0071	--
1/19/2012 22:00	0.0088	--	1/19/2012 22:00	SOURCE DOWN	--	1/19/2012 22:00	0.0074	--
1/19/2012 23:00	0.0089	--	1/19/2012 23:00	SOURCE DOWN	--	1/19/2012 23:00	0.0074	--
1/20/2012 0:00	0.0089	--	1/20/2012 0:00	SOURCE DOWN	--	1/20/2012 0:00	0.0074	--
1/20/2012 1:00	0.0089	--	1/20/2012 1:00	SOURCE DOWN	--	1/20/2012 1:00	0.0073	--
1/20/2012 2:00	0.0089	--	1/20/2012 2:00	SOURCE DOWN	--	1/20/2012 2:00	0.0073	--
1/20/2012 3:00	0.0088	--	1/20/2012 3:00	SOURCE DOWN	--	1/20/2012 3:00	0.0070	--
1/20/2012 4:00	0.0087	--	1/20/2012 4:00	SOURCE DOWN	--	1/20/2012 4:00	0.0072	--
1/20/2012 5:00	0.0089	--	1/20/2012 5:00	SOURCE DOWN	--	1/20/2012 5:00	0.0074	--
1/20/2012 6:00	0.0090	--	1/20/2012 6:00	SOURCE DOWN	--	1/20/2012 6:00	0.0078	--
1/20/2012 7:00	0.0088	--	1/20/2012 7:00	SOURCE DOWN	--	1/20/2012 7:00	0.0072	--
1/20/2012 8:00	0.0089	--	1/20/2012 8:00	SOURCE DOWN	--	1/20/2012 8:00	0.0067	--
1/20/2012 9:00	0.0090	--	1/20/2012 9:00	SOURCE DOWN	--	1/20/2012 9:00	0.0072	--
1/20/2012 10:00	0.0091	--	1/20/2012 10:00	SOURCE DOWN	--	1/20/2012 10:00	0.0071	--
1/20/2012 11:00	0.0090	--	1/20/2012 11:00	SOURCE DOWN	--	1/20/2012 11:00	0.0074	--
1/20/2012 12:00	0.0090	--	1/20/2012 12:00	SOURCE DOWN	--	1/20/2012 12:00	0.0075	--
1/20/2012 13:00	0.0090	--	1/20/2012 13:00	SOURCE DOWN	--	1/20/2012 13:00	0.0071	--
1/20/2012 14:00	0.0088	--	1/20/2012 14:00	SOURCE DOWN	--	1/20/2012 14:00	0.0073	--
1/20/2012 15:00	0.0089	--	1/20/2012 15:00	SOURCE DOWN	--	1/20/2012 15:00	0.0074	--
1/20/2012 16:00	0.0088	--	1/20/2012 16:00	SOURCE DOWN	--	1/20/2012 16:00	0.0071	--
1/20/2012 17:00	0.0088	--	1/20/2012 17:00	SOURCE DOWN	--	1/20/2012 17:00	0.0072	--
1/20/2012 18:00	0.0088	--	1/20/2012 18:00	SOURCE DOWN	--	1/20/2012 18:00	0.0073	--

Package Boiler No. 1 EPN 81BF01			Package Boiler No. 2 EPN 50BF02			Package Boiler No. 3 EPN 50BF03		
Date	NO_X (lb/MMBtu)	NO_X (lb/MMBtu) 30-day Rolling Average	Date	NO_X (lb/MMBtu)	NO_X (lb/MMBtu) 30-day Rolling Average	Date	NO_X (lb/MMBtu)	NO_X (lb/MMBtu) 30-day Rolling Average
1/20/2012 19:00	0.0089	--	1/20/2012 19:00	SOURCE DOWN	--	1/20/2012 19:00	0.0074	--
1/20/2012 20:00	0.0089	--	1/20/2012 20:00	SOURCE DOWN	--	1/20/2012 20:00	0.0072	--
1/20/2012 21:00	0.0089	--	1/20/2012 21:00	SOURCE DOWN	--	1/20/2012 21:00	0.0073	--
1/20/2012 22:00	0.0088	--	1/20/2012 22:00	SOURCE DOWN	--	1/20/2012 22:00	0.0073	--
1/20/2012 23:00	0.0089	--	1/20/2012 23:00	SOURCE DOWN	--	1/20/2012 23:00	0.0072	--
1/21/2012 0:00	0.0088	--	1/21/2012 0:00	SOURCE DOWN	--	1/21/2012 0:00	0.0073	--
1/21/2012 1:00	0.0089	--	1/21/2012 1:00	SOURCE DOWN	--	1/21/2012 1:00	0.0074	--
1/21/2012 2:00	0.0089	--	1/21/2012 2:00	SOURCE DOWN	--	1/21/2012 2:00	0.0073	--
1/21/2012 3:00	0.0091	--	1/21/2012 3:00	SOURCE DOWN	--	1/21/2012 3:00	0.0073	--
1/21/2012 4:00	0.0089	--	1/21/2012 4:00	SOURCE DOWN	--	1/21/2012 4:00	0.0071	--
1/21/2012 5:00	0.0089	--	1/21/2012 5:00	SOURCE DOWN	--	1/21/2012 5:00	0.0075	--
1/21/2012 6:00	0.0081	--	1/21/2012 6:00	SOURCE DOWN	--	1/21/2012 6:00	0.0079	--
1/21/2012 7:00	0.0085	--	1/21/2012 7:00	SOURCE DOWN	--	1/21/2012 7:00	0.0072	--
1/21/2012 8:00	0.0091	--	1/21/2012 8:00	SOURCE DOWN	--	1/21/2012 8:00	0.0077	--
1/21/2012 9:00	0.0088	--	1/21/2012 9:00	SOURCE DOWN	--	1/21/2012 9:00	0.0069	--
1/21/2012 10:00	0.0090	--	1/21/2012 10:00	SOURCE DOWN	--	1/21/2012 10:00	0.0071	--
1/21/2012 11:00	0.0097	--	1/21/2012 11:00	SOURCE DOWN	--	1/21/2012 11:00	0.0082	--
1/21/2012 12:00	0.0086	--	1/21/2012 12:00	SOURCE DOWN	--	1/21/2012 12:00	0.0067	--
1/21/2012 13:00	0.0087	--	1/21/2012 13:00	SOURCE DOWN	--	1/21/2012 13:00	0.0072	--
1/21/2012 14:00	0.0088	--	1/21/2012 14:00	SOURCE DOWN	--	1/21/2012 14:00	0.0072	--
1/21/2012 15:00	0.0090	--	1/21/2012 15:00	SOURCE DOWN	--	1/21/2012 15:00	0.0075	--
1/21/2012 16:00	0.0090	--	1/21/2012 16:00	SOURCE DOWN	--	1/21/2012 16:00	0.0073	--
1/21/2012 17:00	0.0092	--	1/21/2012 17:00	SOURCE DOWN	--	1/21/2012 17:00	0.0075	--
1/21/2012 18:00	0.0089	--	1/21/2012 18:00	SOURCE DOWN	--	1/21/2012 18:00	0.0074	--
1/21/2012 19:00	0.0088	--	1/21/2012 19:00	SOURCE DOWN	--	1/21/2012 19:00	0.0072	--
1/21/2012 20:00	0.0088	--	1/21/2012 20:00	SOURCE DOWN	--	1/21/2012 20:00	0.0074	--
1/21/2012 21:00	0.0088	--	1/21/2012 21:00	SOURCE DOWN	--	1/21/2012 21:00	0.0075	--
1/21/2012 22:00	0.0089	--	1/21/2012 22:00	SOURCE DOWN	--	1/21/2012 22:00	0.0070	--
1/21/2012 23:00	0.0085	--	1/21/2012 23:00	SOURCE DOWN	--	1/21/2012 23:00	0.0071	--
1/22/2012 0:00	0.0087	--	1/22/2012 0:00	SOURCE DOWN	--	1/22/2012 0:00	0.0071	--
1/22/2012 1:00	0.0087	--	1/22/2012 1:00	SOURCE DOWN	--	1/22/2012 1:00	0.0070	--
1/22/2012 2:00	0.0087	--	1/22/2012 2:00	SOURCE DOWN	--	1/22/2012 2:00	0.0070	--
1/22/2012 3:00	0.0087	--	1/22/2012 3:00	SOURCE DOWN	--	1/22/2012 3:00	0.0072	--
1/22/2012 4:00	0.0087	--	1/22/2012 4:00	SOURCE DOWN	--	1/22/2012 4:00	0.0070	--
1/22/2012 5:00	0.0092	--	1/22/2012 5:00	SOURCE DOWN	--	1/22/2012 5:00	0.0076	--
1/22/2012 6:00	0.0102	--	1/22/2012 6:00	SOURCE DOWN	--	1/22/2012 6:00	0.0071	--
1/22/2012 7:00	0.0092	--	1/22/2012 7:00	SOURCE DOWN	--	1/22/2012 7:00	0.0074	--
1/22/2012 8:00	0.0090	--	1/22/2012 8:00	SOURCE DOWN	--	1/22/2012 8:00	0.0076	--
1/22/2012 9:00	0.0090	--	1/22/2012 9:00	SOURCE DOWN	--	1/22/2012 9:00	0.0073	--
1/22/2012 10:00	0.0089	--	1/22/2012 10:00	SOURCE DOWN	--	1/22/2012 10:00	0.0071	--
1/22/2012 11:00	0.0087	--	1/22/2012 11:00	SOURCE DOWN	--	1/22/2012 11:00	0.0071	--

Package Boiler No. 1 EPN 81BF01			Package Boiler No. 2 EPN 50BF02			Package Boiler No. 3 EPN 50BF03		
Date	NO_X (lb/MMBtu)	NO_X (lb/MMBtu) 30-day Rolling Average	Date	NO_X (lb/MMBtu)	NO_X (lb/MMBtu) 30-day Rolling Average	Date	NO_X (lb/MMBtu)	NO_X (lb/MMBtu) 30-day Rolling Average
1/22/2012 12:00	0.0091	--	1/22/2012 12:00	SOURCE DOWN	--	1/22/2012 12:00	0.0076	--
1/22/2012 13:00	0.0087	--	1/22/2012 13:00	SOURCE DOWN	--	1/22/2012 13:00	0.0071	--
1/22/2012 14:00	0.0089	--	1/22/2012 14:00	SOURCE DOWN	--	1/22/2012 14:00	0.0076	--
1/22/2012 15:00	0.0090	--	1/22/2012 15:00	SOURCE DOWN	--	1/22/2012 15:00	0.0074	--
1/22/2012 16:00	0.0089	--	1/22/2012 16:00	SOURCE DOWN	--	1/22/2012 16:00	0.0069	--
1/22/2012 17:00	0.0089	--	1/22/2012 17:00	SOURCE DOWN	--	1/22/2012 17:00	0.0072	--
1/22/2012 18:00	0.0088	--	1/22/2012 18:00	SOURCE DOWN	--	1/22/2012 18:00	0.0073	--
1/22/2012 19:00	0.0088	--	1/22/2012 19:00	SOURCE DOWN	--	1/22/2012 19:00	0.0072	--
1/22/2012 20:00	0.0089	--	1/22/2012 20:00	SOURCE DOWN	--	1/22/2012 20:00	0.0074	--
1/22/2012 21:00	0.0088	--	1/22/2012 21:00	SOURCE DOWN	--	1/22/2012 21:00	0.0072	--
1/22/2012 22:00	0.0088	--	1/22/2012 22:00	SOURCE DOWN	--	1/22/2012 22:00	0.0073	--
1/22/2012 23:00	0.0090	--	1/22/2012 23:00	SOURCE DOWN	--	1/22/2012 23:00	0.0077	--
1/23/2012 0:00	0.0089	--	1/23/2012 0:00	SOURCE DOWN	--	1/23/2012 0:00	0.0070	--
1/23/2012 1:00	0.0088	--	1/23/2012 1:00	SOURCE DOWN	--	1/23/2012 1:00	0.0073	--
1/23/2012 2:00	0.0089	--	1/23/2012 2:00	SOURCE DOWN	--	1/23/2012 2:00	0.0074	--
1/23/2012 3:00	0.0089	--	1/23/2012 3:00	SOURCE DOWN	--	1/23/2012 3:00	0.0074	--
1/23/2012 4:00	0.0090	--	1/23/2012 4:00	SOURCE DOWN	--	1/23/2012 4:00	0.0074	--
1/23/2012 5:00	0.0094	--	1/23/2012 5:00	SOURCE DOWN	--	1/23/2012 5:00	0.0079	--
1/23/2012 6:00	0.0098	--	1/23/2012 6:00	SOURCE DOWN	--	1/23/2012 6:00	0.0098	--
1/23/2012 7:00	0.0091	--	1/23/2012 7:00	SOURCE DOWN	--	1/23/2012 7:00	0.0077	--
1/23/2012 8:00	0.0090	--	1/23/2012 8:00	SOURCE DOWN	--	1/23/2012 8:00	0.0072	--
1/23/2012 9:00	0.0090	--	1/23/2012 9:00	SOURCE DOWN	--	1/23/2012 9:00	0.0073	--
1/23/2012 10:00	0.0091	--	1/23/2012 10:00	SOURCE DOWN	--	1/23/2012 10:00	0.0073	--
1/23/2012 11:00	0.0089	--	1/23/2012 11:00	SOURCE DOWN	--	1/23/2012 11:00	0.0070	--
1/23/2012 12:00	0.0083	--	1/23/2012 12:00	SOURCE DOWN	--	1/23/2012 12:00	0.0070	--
1/23/2012 13:00	0.0091	--	1/23/2012 13:00	SOURCE DOWN	--	1/23/2012 13:00	0.0074	--
1/23/2012 14:00	0.0087	--	1/23/2012 14:00	SOURCE DOWN	--	1/23/2012 14:00	0.0071	--
1/23/2012 15:00	0.0089	--	1/23/2012 15:00	SOURCE DOWN	--	1/23/2012 15:00	0.0072	--
1/23/2012 16:00	0.0091	--	1/23/2012 16:00	SOURCE DOWN	--	1/23/2012 16:00	0.0075	--
1/23/2012 17:00	0.0090	--	1/23/2012 17:00	SOURCE DOWN	--	1/23/2012 17:00	0.0073	--
1/23/2012 18:00	0.0089	--	1/23/2012 18:00	SOURCE DOWN	--	1/23/2012 18:00	0.0072	--
1/23/2012 19:00	0.0089	--	1/23/2012 19:00	SOURCE DOWN	--	1/23/2012 19:00	0.0074	--
1/23/2012 20:00	0.0086	--	1/23/2012 20:00	SOURCE DOWN	--	1/23/2012 20:00	0.0071	--
1/23/2012 21:00	0.0088	--	1/23/2012 21:00	SOURCE DOWN	--	1/23/2012 21:00	0.0072	--
1/23/2012 22:00	0.0088	--	1/23/2012 22:00	SOURCE DOWN	--	1/23/2012 22:00	0.0073	--
1/23/2012 23:00	0.0089	--	1/23/2012 23:00	SOURCE DOWN	--	1/23/2012 23:00	0.0073	--
1/24/2012 0:00	0.0088	--	1/24/2012 0:00	SOURCE DOWN	--	1/24/2012 0:00	0.0073	--
1/24/2012 1:00	0.0088	--	1/24/2012 1:00	SOURCE DOWN	--	1/24/2012 1:00	0.0070	--
1/24/2012 2:00	0.0091	--	1/24/2012 2:00	SOURCE DOWN	--	1/24/2012 2:00	0.0077	--
1/24/2012 3:00	0.0087	--	1/24/2012 3:00	SOURCE DOWN	--	1/24/2012 3:00	0.0070	--
1/24/2012 4:00	0.0084	--	1/24/2012 4:00	SOURCE DOWN	--	1/24/2012 4:00	0.0072	--

Package Boiler No. 1 EPN 81BF01			Package Boiler No. 2 EPN 50BF02			Package Boiler No. 3 EPN 50BF03		
Date	NO_X (lb/MMBtu)	NO_X (lb/MMBtu) 30-day Rolling Average	Date	NO_X (lb/MMBtu)	NO_X (lb/MMBtu) 30-day Rolling Average	Date	NO_X (lb/MMBtu)	NO_X (lb/MMBtu) 30-day Rolling Average
1/24/2012 5:00	0.0079	--	1/24/2012 5:00	SOURCE DOWN	--	1/24/2012 5:00	0.0072	--
1/24/2012 6:00	0.0083	--	1/24/2012 6:00	SOURCE DOWN	--	1/24/2012 6:00	0.0072	--
1/24/2012 7:00	0.0082	--	1/24/2012 7:00	SOURCE DOWN	--	1/24/2012 7:00	0.0072	--
1/24/2012 8:00	0.0086	--	1/24/2012 8:00	SOURCE DOWN	--	1/24/2012 8:00	0.0075	--
1/24/2012 9:00	0.0085	--	1/24/2012 9:00	SOURCE DOWN	--	1/24/2012 9:00	0.0072	--
1/24/2012 10:00	0.0083	--	1/24/2012 10:00	SOURCE DOWN	--	1/24/2012 10:00	0.0070	--
1/24/2012 11:00	0.0084	--	1/24/2012 11:00	SOURCE DOWN	--	1/24/2012 11:00	0.0076	--
1/24/2012 12:00	0.0084	--	1/24/2012 12:00	SOURCE DOWN	--	1/24/2012 12:00	0.0073	--
1/24/2012 13:00	0.0084	--	1/24/2012 13:00	SOURCE DOWN	--	1/24/2012 13:00	0.0072	--
1/24/2012 14:00	0.0084	--	1/24/2012 14:00	SOURCE DOWN	--	1/24/2012 14:00	0.0073	--
1/24/2012 15:00	0.0085	--	1/24/2012 15:00	SOURCE DOWN	--	1/24/2012 15:00	0.0072	--
1/24/2012 16:00	0.0085	--	1/24/2012 16:00	SOURCE DOWN	--	1/24/2012 16:00	0.0072	--
1/24/2012 17:00	0.0085	--	1/24/2012 17:00	SOURCE DOWN	--	1/24/2012 17:00	0.0072	--
1/24/2012 18:00	0.0086	--	1/24/2012 18:00	SOURCE DOWN	--	1/24/2012 18:00	0.0074	--
1/24/2012 19:00	0.0085	--	1/24/2012 19:00	SOURCE DOWN	--	1/24/2012 19:00	0.0073	--
1/24/2012 20:00	0.0085	--	1/24/2012 20:00	SOURCE DOWN	--	1/24/2012 20:00	0.0073	--
1/24/2012 21:00	0.0085	--	1/24/2012 21:00	SOURCE DOWN	--	1/24/2012 21:00	0.0072	--
1/24/2012 22:00	0.0085	--	1/24/2012 22:00	SOURCE DOWN	--	1/24/2012 22:00	0.0072	--
1/24/2012 23:00	0.0086	--	1/24/2012 23:00	SOURCE DOWN	--	1/24/2012 23:00	0.0073	--
1/25/2012 0:00	0.0085	--	1/25/2012 0:00	SOURCE DOWN	--	1/25/2012 0:00	0.0072	--
1/25/2012 1:00	0.0084	--	1/25/2012 1:00	SOURCE DOWN	--	1/25/2012 1:00	0.0072	--
1/25/2012 2:00	0.0083	--	1/25/2012 2:00	SOURCE DOWN	--	1/25/2012 2:00	0.0074	--
1/25/2012 3:00	0.0084	--	1/25/2012 3:00	SOURCE DOWN	--	1/25/2012 3:00	0.0073	--
1/25/2012 4:00	0.0084	--	1/25/2012 4:00	SOURCE DOWN	--	1/25/2012 4:00	0.0072	--
1/25/2012 5:00	0.0085	--	1/25/2012 5:00	SOURCE DOWN	--	1/25/2012 5:00	0.0074	--
1/25/2012 6:00	0.0089	--	1/25/2012 6:00	SOURCE DOWN	--	1/25/2012 6:00	0.0064	--
1/25/2012 7:00	0.0086	--	1/25/2012 7:00	SOURCE DOWN	--	1/25/2012 7:00	0.0074	--
1/25/2012 8:00	0.0085	--	1/25/2012 8:00	SOURCE DOWN	--	1/25/2012 8:00	0.0072	--
1/25/2012 9:00	0.0086	--	1/25/2012 9:00	SOURCE DOWN	--	1/25/2012 9:00	0.0072	--
1/25/2012 10:00	0.0086	--	1/25/2012 10:00	SOURCE DOWN	--	1/25/2012 10:00	0.0073	--
1/25/2012 11:00	0.0086	--	1/25/2012 11:00	SOURCE DOWN	--	1/25/2012 11:00	0.0078	--
1/25/2012 12:00	0.0091	--	1/25/2012 12:00	SOURCE DOWN	--	1/25/2012 12:00	0.0097	--
1/25/2012 13:00	0.0119	--	1/25/2012 13:00	SOURCE DOWN	--	1/25/2012 13:00	0.0081	--
1/25/2012 14:00	0.0108	--	1/25/2012 14:00	SOURCE DOWN	--	1/25/2012 14:00	0.0070	--
1/25/2012 15:00	0.0091	--	1/25/2012 15:00	SOURCE DOWN	--	1/25/2012 15:00	0.0069	--
1/25/2012 16:00	0.0089	--	1/25/2012 16:00	SOURCE DOWN	--	1/25/2012 16:00	0.0074	--
1/25/2012 17:00	0.0086	--	1/25/2012 17:00	SOURCE DOWN	--	1/25/2012 17:00	0.0073	--
1/25/2012 18:00	0.0090	--	1/25/2012 18:00	SOURCE DOWN	--	1/25/2012 18:00	0.0077	--
1/25/2012 19:00	0.0090	--	1/25/2012 19:00	SOURCE DOWN	--	1/25/2012 19:00	0.0074	--
1/25/2012 20:00	0.0086	--	1/25/2012 20:00	SOURCE DOWN	--	1/25/2012 20:00	0.0071	--
1/25/2012 21:00	0.0088	--	1/25/2012 21:00	SOURCE DOWN	--	1/25/2012 21:00	0.0075	--

Package Boiler No. 1 EPN 81BF01			Package Boiler No. 2 EPN 50BF02			Package Boiler No. 3 EPN 50BF03		
Date	NO_X (lb/MMBtu)	NO_X (lb/MMBtu) 30-day Rolling Average	Date	NO_X (lb/MMBtu)	NO_X (lb/MMBtu) 30-day Rolling Average	Date	NO_X (lb/MMBtu)	NO_X (lb/MMBtu) 30-day Rolling Average
1/25/2012 22:00	0.0086	--	1/25/2012 22:00	SOURCE DOWN	--	1/25/2012 22:00	0.0072	--
1/25/2012 23:00	0.0087	--	1/25/2012 23:00	SOURCE DOWN	--	1/25/2012 23:00	0.0074	--
1/26/2012 0:00	0.0090	--	1/26/2012 0:00	SOURCE DOWN	--	1/26/2012 0:00	0.0075	--
1/26/2012 1:00	0.0087	--	1/26/2012 1:00	SOURCE DOWN	--	1/26/2012 1:00	0.0071	--
1/26/2012 2:00	0.0084	--	1/26/2012 2:00	SOURCE DOWN	--	1/26/2012 2:00	0.0071	--
1/26/2012 3:00	0.0086	--	1/26/2012 3:00	SOURCE DOWN	--	1/26/2012 3:00	0.0074	--
1/26/2012 4:00	0.0092	--	1/26/2012 4:00	SOURCE DOWN	--	1/26/2012 4:00	0.0075	--
1/26/2012 5:00	0.0089	--	1/26/2012 5:00	SOURCE DOWN	--	1/26/2012 5:00	0.0073	--
1/26/2012 6:00	0.0093	--	1/26/2012 6:00	SOURCE DOWN	--	1/26/2012 6:00	0.0075	--
1/26/2012 7:00	0.0088	--	1/26/2012 7:00	SOURCE DOWN	--	1/26/2012 7:00	0.0072	--
1/26/2012 8:00	0.0082	--	1/26/2012 8:00	SOURCE DOWN	--	1/26/2012 8:00	0.0070	--
1/26/2012 9:00	0.0092	--	1/26/2012 9:00	SOURCE DOWN	--	1/26/2012 9:00	0.0075	--
1/26/2012 10:00	0.0091	--	1/26/2012 10:00	SOURCE DOWN	--	1/26/2012 10:00	0.0074	--
1/26/2012 11:00	0.0088	--	1/26/2012 11:00	SOURCE DOWN	--	1/26/2012 11:00	0.0073	--
1/26/2012 12:00	0.0088	--	1/26/2012 12:00	SOURCE DOWN	--	1/26/2012 12:00	0.0074	--
1/26/2012 13:00	0.0089	--	1/26/2012 13:00	SOURCE DOWN	--	1/26/2012 13:00	0.0073	--
1/26/2012 14:00	0.0087	--	1/26/2012 14:00	SOURCE DOWN	--	1/26/2012 14:00	0.0074	--
1/26/2012 15:00	0.0086	--	1/26/2012 15:00	SOURCE DOWN	--	1/26/2012 15:00	0.0074	--
1/26/2012 16:00	0.0087	--	1/26/2012 16:00	SOURCE DOWN	--	1/26/2012 16:00	0.0075	--
1/26/2012 17:00	0.0089	--	1/26/2012 17:00	SOURCE DOWN	--	1/26/2012 17:00	0.0073	--
1/26/2012 18:00	0.0088	--	1/26/2012 18:00	SOURCE DOWN	--	1/26/2012 18:00	0.0074	--
1/26/2012 19:00	0.0090	--	1/26/2012 19:00	SOURCE DOWN	--	1/26/2012 19:00	0.0075	--
1/26/2012 20:00	0.0087	--	1/26/2012 20:00	SOURCE DOWN	--	1/26/2012 20:00	0.0073	--
1/26/2012 21:00	0.0084	--	1/26/2012 21:00	SOURCE DOWN	--	1/26/2012 21:00	0.0071	--
1/26/2012 22:00	0.0087	--	1/26/2012 22:00	SOURCE DOWN	--	1/26/2012 22:00	0.0074	--
1/26/2012 23:00	0.0088	--	1/26/2012 23:00	SOURCE DOWN	--	1/26/2012 23:00	0.0077	--
1/27/2012 0:00	0.0098	--	1/27/2012 0:00	SOURCE DOWN	--	1/27/2012 0:00	0.0117	--
1/27/2012 1:00	0.0093	--	1/27/2012 1:00	SOURCE DOWN	--	1/27/2012 1:00	0.0183	--
1/27/2012 2:00	0.0097	--	1/27/2012 2:00	SOURCE DOWN	--	1/27/2012 2:00	0.0170	--
1/27/2012 3:00	0.0092	--	1/27/2012 3:00	SOURCE DOWN	--	1/27/2012 3:00	0.0132	--
1/27/2012 4:00	0.0093	--	1/27/2012 4:00	SOURCE DOWN	--	1/27/2012 4:00	0.0057	--
1/27/2012 5:00	0.0095	--	1/27/2012 5:00	SOURCE DOWN	--	1/27/2012 5:00	0.0057	--
1/27/2012 6:00	0.0094	--	1/27/2012 6:00	SOURCE DOWN	--	1/27/2012 6:00	0.0065	--
1/27/2012 7:00	0.0094	--	1/27/2012 7:00	SOURCE DOWN	--	1/27/2012 7:00	0.0073	--
1/27/2012 8:00	0.0091	--	1/27/2012 8:00	SOURCE DOWN	--	1/27/2012 8:00	0.0074	--
1/27/2012 9:00	0.0093	--	1/27/2012 9:00	SOURCE DOWN	--	1/27/2012 9:00	0.0074	--
1/27/2012 10:00	0.0093	--	1/27/2012 10:00	SOURCE DOWN	--	1/27/2012 10:00	0.0086	--
1/27/2012 11:00	0.0093	--	1/27/2012 11:00	SOURCE DOWN	--	1/27/2012 11:00	0.0104	--
1/27/2012 12:00	0.0096	--	1/27/2012 12:00	SOURCE DOWN	--	1/27/2012 12:00	0.0074	--
1/27/2012 13:00	0.0096	--	1/27/2012 13:00	SOURCE DOWN	--	1/27/2012 13:00	0.0061	--
1/27/2012 14:00	0.0097	--	1/27/2012 14:00	SOURCE DOWN	--	1/27/2012 14:00	0.0069	--

Package Boiler No. 1 EPN 81BF01			Package Boiler No. 2 EPN 50BF02			Package Boiler No. 3 EPN 50BF03		
Date	NO_X (lb/MMBtu)	NO_X (lb/MMBtu) 30-day Rolling Average	Date	NO_X (lb/MMBtu)	NO_X (lb/MMBtu) 30-day Rolling Average	Date	NO_X (lb/MMBtu)	NO_X (lb/MMBtu) 30-day Rolling Average
1/27/2012 15:00	0.0102	--	1/27/2012 15:00	SOURCE DOWN	--	1/27/2012 15:00	0.0076	--
1/27/2012 16:00	0.0106	--	1/27/2012 16:00	SOURCE DOWN	--	1/27/2012 16:00	0.0070	--
1/27/2012 17:00	0.0091	--	1/27/2012 17:00	SOURCE DOWN	--	1/27/2012 17:00	0.0071	--
1/27/2012 18:00	0.0088	--	1/27/2012 18:00	SOURCE DOWN	--	1/27/2012 18:00	0.0073	--
1/27/2012 19:00	0.0088	--	1/27/2012 19:00	SOURCE DOWN	--	1/27/2012 19:00	0.0072	--
1/27/2012 20:00	0.0088	--	1/27/2012 20:00	SOURCE DOWN	--	1/27/2012 20:00	0.0081	--
1/27/2012 21:00	0.0087	--	1/27/2012 21:00	SOURCE DOWN	--	1/27/2012 21:00	0.0083	--
1/27/2012 22:00	0.0087	--	1/27/2012 22:00	SOURCE DOWN	--	1/27/2012 22:00	0.0078	--
1/27/2012 23:00	0.0087	--	1/27/2012 23:00	SOURCE DOWN	--	1/27/2012 23:00	0.0073	--
1/28/2012 0:00	0.0087	--	1/28/2012 0:00	SOURCE DOWN	--	1/28/2012 0:00	0.0072	--
1/28/2012 1:00	0.0087	--	1/28/2012 1:00	SOURCE DOWN	--	1/28/2012 1:00	0.0075	--
1/28/2012 2:00	0.0087	--	1/28/2012 2:00	SOURCE DOWN	--	1/28/2012 2:00	0.0079	--
1/28/2012 3:00	0.0088	--	1/28/2012 3:00	SOURCE DOWN	--	1/28/2012 3:00	0.0082	--
1/28/2012 4:00	0.0087	--	1/28/2012 4:00	SOURCE DOWN	--	1/28/2012 4:00	0.0080	--
1/28/2012 5:00	0.0089	--	1/28/2012 5:00	SOURCE DOWN	--	1/28/2012 5:00	0.0093	--
1/28/2012 6:00	0.0095	--	1/28/2012 6:00	SOURCE DOWN	--	1/28/2012 6:00	0.0098	--
1/28/2012 7:00	0.0090	--	1/28/2012 7:00	SOURCE DOWN	--	1/28/2012 7:00	0.0087	--
1/28/2012 8:00	0.0090	--	1/28/2012 8:00	SOURCE DOWN	--	1/28/2012 8:00	0.0096	--
1/28/2012 9:00	0.0092	--	1/28/2012 9:00	SOURCE DOWN	--	1/28/2012 9:00	0.0085	--
1/28/2012 10:00	0.0098	--	1/28/2012 10:00	SOURCE DOWN	--	1/28/2012 10:00	0.0094	--
1/28/2012 11:00	0.0097	--	1/28/2012 11:00	SOURCE DOWN	--	1/28/2012 11:00	0.0090	--
1/28/2012 12:00	0.0097	--	1/28/2012 12:00	SOURCE DOWN	--	1/28/2012 12:00	0.0086	--
1/28/2012 13:00	0.0096	--	1/28/2012 13:00	SOURCE DOWN	--	1/28/2012 13:00	0.0080	--
1/28/2012 14:00	0.0098	--	1/28/2012 14:00	SOURCE DOWN	--	1/28/2012 14:00	0.0078	--
1/28/2012 15:00	0.0099	--	1/28/2012 15:00	SOURCE DOWN	--	1/28/2012 15:00	0.0066	--
1/28/2012 16:00	0.0099	--	1/28/2012 16:00	SOURCE DOWN	--	1/28/2012 16:00	0.0062	--
1/28/2012 17:00	0.0096	--	1/28/2012 17:00	SOURCE DOWN	--	1/28/2012 17:00	0.0069	--
1/28/2012 18:00	0.0095	--	1/28/2012 18:00	SOURCE DOWN	--	1/28/2012 18:00	0.0072	--
1/28/2012 19:00	0.0093	--	1/28/2012 19:00	SOURCE DOWN	--	1/28/2012 19:00	0.0073	--
1/28/2012 20:00	0.0092	--	1/28/2012 20:00	SOURCE DOWN	--	1/28/2012 20:00	0.0073	--
1/28/2012 21:00	0.0096	--	1/28/2012 21:00	SOURCE DOWN	--	1/28/2012 21:00	0.0072	--
1/28/2012 22:00	0.0093	--	1/28/2012 22:00	SOURCE DOWN	--	1/28/2012 22:00	0.0074	--
1/28/2012 23:00	0.0093	--	1/28/2012 23:00	SOURCE DOWN	--	1/28/2012 23:00	0.0082	--
1/29/2012 0:00	0.0092	--	1/29/2012 0:00	SOURCE DOWN	--	1/29/2012 0:00	0.0078	--
1/29/2012 1:00	0.0092	--	1/29/2012 1:00	SOURCE DOWN	--	1/29/2012 1:00	0.0073	--
1/29/2012 2:00	0.0092	--	1/29/2012 2:00	SOURCE DOWN	--	1/29/2012 2:00	0.0073	--
1/29/2012 3:00	0.0092	--	1/29/2012 3:00	SOURCE DOWN	--	1/29/2012 3:00	0.0073	--
1/29/2012 4:00	0.0091	--	1/29/2012 4:00	SOURCE DOWN	--	1/29/2012 4:00	0.0072	--
1/29/2012 5:00	0.0091	--	1/29/2012 5:00	SOURCE DOWN	--	1/29/2012 5:00	0.0071	--
1/29/2012 6:00	0.0096	--	1/29/2012 6:00	SOURCE DOWN	--	1/29/2012 6:00	0.0067	--
1/29/2012 7:00	0.0093	--	1/29/2012 7:00	SOURCE DOWN	--	1/29/2012 7:00	0.0069	--

Package Boiler No. 1 EPN 81BF01			Package Boiler No. 2 EPN 50BF02			Package Boiler No. 3 EPN 50BF03		
Date	NO_X (lb/MMBtu)	NO_X (lb/MMBtu) 30-day Rolling Average	Date	NO_X (lb/MMBtu)	NO_X (lb/MMBtu) 30-day Rolling Average	Date	NO_X (lb/MMBtu)	NO_X (lb/MMBtu) 30-day Rolling Average
1/29/2012 8:00	0.0093	--	1/29/2012 8:00	SOURCE DOWN	--	1/29/2012 8:00	0.0074	--
1/29/2012 9:00	0.0095	--	1/29/2012 9:00	SOURCE DOWN	--	1/29/2012 9:00	0.0085	--
1/29/2012 10:00	0.0096	--	1/29/2012 10:00	SOURCE DOWN	--	1/29/2012 10:00	0.0084	--
1/29/2012 11:00	0.0097	--	1/29/2012 11:00	SOURCE DOWN	--	1/29/2012 11:00	0.0089	--
1/29/2012 12:00	0.0098	--	1/29/2012 12:00	SOURCE DOWN	--	1/29/2012 12:00	0.0086	--
1/29/2012 13:00	0.0104	--	1/29/2012 13:00	SOURCE DOWN	--	1/29/2012 13:00	0.0077	--
1/29/2012 14:00	0.0101	--	1/29/2012 14:00	SOURCE DOWN	--	1/29/2012 14:00	0.0077	--
1/29/2012 15:00	0.0101	--	1/29/2012 15:00	SOURCE DOWN	--	1/29/2012 15:00	0.0073	--
1/29/2012 16:00	0.0101	--	1/29/2012 16:00	SOURCE DOWN	--	1/29/2012 16:00	0.0077	--
1/29/2012 17:00	0.0097	--	1/29/2012 17:00	SOURCE DOWN	--	1/29/2012 17:00	0.0075	--
1/29/2012 18:00	0.0090	--	1/29/2012 18:00	SOURCE DOWN	--	1/29/2012 18:00	0.0069	--
1/29/2012 19:00	0.0088	--	1/29/2012 19:00	SOURCE DOWN	--	1/29/2012 19:00	0.0071	--
1/29/2012 20:00	0.0091	--	1/29/2012 20:00	SOURCE DOWN	--	1/29/2012 20:00	0.0072	--
1/29/2012 21:00	0.0092	--	1/29/2012 21:00	SOURCE DOWN	--	1/29/2012 21:00	0.0070	--
1/29/2012 22:00	0.0091	--	1/29/2012 22:00	SOURCE DOWN	--	1/29/2012 22:00	0.0070	--
1/29/2012 23:00	0.0092	--	1/29/2012 23:00	SOURCE DOWN	--	1/29/2012 23:00	0.0071	--
1/30/2012 0:00	0.0090	--	1/30/2012 0:00	SOURCE DOWN	--	1/30/2012 0:00	0.0071	--
1/30/2012 1:00	0.0092	--	1/30/2012 1:00	SOURCE DOWN	--	1/30/2012 1:00	0.0073	--
1/30/2012 2:00	0.0091	--	1/30/2012 2:00	SOURCE DOWN	--	1/30/2012 2:00	0.0072	--
1/30/2012 3:00	0.0091	--	1/30/2012 3:00	SOURCE DOWN	--	1/30/2012 3:00	0.0070	--
1/30/2012 4:00	0.0092	--	1/30/2012 4:00	SOURCE DOWN	--	1/30/2012 4:00	0.0072	--
1/30/2012 5:00	0.0091	--	1/30/2012 5:00	SOURCE DOWN	--	1/30/2012 5:00	0.0072	--
1/30/2012 6:00	0.0093	--	1/30/2012 6:00	SOURCE DOWN	--	1/30/2012 6:00	0.0075	--
1/30/2012 7:00	0.0092	--	1/30/2012 7:00	SOURCE DOWN	--	1/30/2012 7:00	0.0073	--
1/30/2012 8:00	0.0091	--	1/30/2012 8:00	SOURCE DOWN	--	1/30/2012 8:00	0.0071	--
1/30/2012 9:00	0.0091	--	1/30/2012 9:00	SOURCE DOWN	--	1/30/2012 9:00	0.0071	--
1/30/2012 10:00	0.0090	--	1/30/2012 10:00	SOURCE DOWN	--	1/30/2012 10:00	0.0071	--
1/30/2012 11:00	0.0092	--	1/30/2012 11:00	SOURCE DOWN	--	1/30/2012 11:00	0.0074	--
1/30/2012 12:00	0.0091	--	1/30/2012 12:00	SOURCE DOWN	--	1/30/2012 12:00	0.0073	--
1/30/2012 13:00	0.0082	--	1/30/2012 13:00	SOURCE DOWN	--	1/30/2012 13:00	0.0059	--
1/30/2012 14:00	0.0088	--	1/30/2012 14:00	SOURCE DOWN	--	1/30/2012 14:00	0.0070	--
1/30/2012 15:00	0.0091	--	1/30/2012 15:00	SOURCE DOWN	--	1/30/2012 15:00	0.0074	--
1/30/2012 16:00	0.0090	--	1/30/2012 16:00	SOURCE DOWN	--	1/30/2012 16:00	0.0079	--
1/30/2012 17:00	0.0097	--	1/30/2012 17:00	SOURCE DOWN	--	1/30/2012 17:00	0.0077	--
1/30/2012 18:00	0.0093	--	1/30/2012 18:00	SOURCE DOWN	--	1/30/2012 18:00	0.0072	--
1/30/2012 19:00	0.0091	--	1/30/2012 19:00	SOURCE DOWN	--	1/30/2012 19:00	0.0071	--
1/30/2012 20:00	0.0085	--	1/30/2012 20:00	SOURCE DOWN	--	1/30/2012 20:00	0.0069	--
1/30/2012 21:00	0.0090	--	1/30/2012 21:00	SOURCE DOWN	--	1/30/2012 21:00	0.0072	--
1/30/2012 22:00	0.0091	--	1/30/2012 22:00	SOURCE DOWN	--	1/30/2012 22:00	0.0072	--
1/30/2012 23:00	0.0090	0.0089	1/30/2012 23:00	SOURCE DOWN	0.0000	1/30/2012 23:00	0.0072	0.0077
1/31/2012 0:00	0.0090	--	1/31/2012 0:00	SOURCE DOWN	--	1/31/2012 0:00	0.0072	--

Package Boiler No. 1 EPN 81BF01			Package Boiler No. 2 EPN 50BF02			Package Boiler No. 3 EPN 50BF03		
Date	NO_X (lb/MMBtu)	NO_X (lb/MMBtu) 30-day Rolling Average	Date	NO_X (lb/MMBtu)	NO_X (lb/MMBtu) 30-day Rolling Average	Date	NO_X (lb/MMBtu)	NO_X (lb/MMBtu) 30-day Rolling Average
1/31/2012 1:00	0.0092	--	1/31/2012 1:00	SOURCE DOWN	--	1/31/2012 1:00	0.0073	--
1/31/2012 2:00	0.0092	--	1/31/2012 2:00	SOURCE DOWN	--	1/31/2012 2:00	0.0075	--
1/31/2012 3:00	0.0091	--	1/31/2012 3:00	SOURCE DOWN	--	1/31/2012 3:00	0.0073	--
1/31/2012 4:00	0.0092	--	1/31/2012 4:00	SOURCE DOWN	--	1/31/2012 4:00	0.0073	--
1/31/2012 5:00	0.0091	--	1/31/2012 5:00	SOURCE DOWN	--	1/31/2012 5:00	0.0072	--
1/31/2012 6:00	0.0094	--	1/31/2012 6:00	SOURCE DOWN	--	1/31/2012 6:00	0.0069	--
1/31/2012 7:00	0.0095	--	1/31/2012 7:00	SOURCE DOWN	--	1/31/2012 7:00	0.0075	--
1/31/2012 8:00	0.0088	--	1/31/2012 8:00	SOURCE DOWN	--	1/31/2012 8:00	0.0070	--
1/31/2012 9:00	0.0093	--	1/31/2012 9:00	SOURCE DOWN	--	1/31/2012 9:00	0.0074	--
1/31/2012 10:00	0.0094	--	1/31/2012 10:00	SOURCE DOWN	--	1/31/2012 10:00	0.0071	--
1/31/2012 11:00	0.0092	--	1/31/2012 11:00	SOURCE DOWN	--	1/31/2012 11:00	0.0071	--
1/31/2012 12:00	0.0090	--	1/31/2012 12:00	SOURCE DOWN	--	1/31/2012 12:00	0.0074	--
1/31/2012 13:00	0.0090	--	1/31/2012 13:00	SOURCE DOWN	--	1/31/2012 13:00	0.0070	--
1/31/2012 14:00	0.0095	--	1/31/2012 14:00	SOURCE DOWN	--	1/31/2012 14:00	0.0076	--
1/31/2012 15:00	0.0092	--	1/31/2012 15:00	SOURCE DOWN	--	1/31/2012 15:00	0.0073	--
1/31/2012 16:00	0.0090	--	1/31/2012 16:00	SOURCE DOWN	--	1/31/2012 16:00	0.0073	--
1/31/2012 17:00	0.0092	--	1/31/2012 17:00	SOURCE DOWN	--	1/31/2012 17:00	0.0071	--
1/31/2012 18:00	0.0093	--	1/31/2012 18:00	SOURCE DOWN	--	1/31/2012 18:00	0.0076	--
1/31/2012 19:00	0.0092	--	1/31/2012 19:00	SOURCE DOWN	--	1/31/2012 19:00	0.0073	--
1/31/2012 20:00	0.0093	--	1/31/2012 20:00	SOURCE DOWN	--	1/31/2012 20:00	0.0073	--
1/31/2012 21:00	0.0091	--	1/31/2012 21:00	SOURCE DOWN	--	1/31/2012 21:00	0.0071	--
1/31/2012 22:00	0.0090	--	1/31/2012 22:00	SOURCE DOWN	--	1/31/2012 22:00	0.0072	--
1/31/2012 23:00	0.0091	0.0089	1/31/2012 23:00	SOURCE DOWN	0.0000	1/31/2012 23:00	0.0073	0.0076
2/1/2012 0:00	0.0092	--	2/1/2012 0:00	SOURCE DOWN	--	2/1/2012 0:00	0.0073	--
2/1/2012 1:00	0.0092	--	2/1/2012 1:00	SOURCE DOWN	--	2/1/2012 1:00	0.0073	--
2/1/2012 2:00	0.0091	--	2/1/2012 2:00	SOURCE DOWN	--	2/1/2012 2:00	0.0074	--
2/1/2012 3:00	0.0091	--	2/1/2012 3:00	SOURCE DOWN	--	2/1/2012 3:00	0.0069	--
2/1/2012 4:00	0.0091	--	2/1/2012 4:00	SOURCE DOWN	--	2/1/2012 4:00	0.0074	--
2/1/2012 5:00	0.0091	--	2/1/2012 5:00	SOURCE DOWN	--	2/1/2012 5:00	0.0071	--
2/1/2012 6:00	0.0092	--	2/1/2012 6:00	SOURCE DOWN	--	2/1/2012 6:00	0.0080	--
2/1/2012 7:00	0.0092	--	2/1/2012 7:00	SOURCE DOWN	--	2/1/2012 7:00	0.0072	--
2/1/2012 8:00	0.0095	--	2/1/2012 8:00	SOURCE DOWN	--	2/1/2012 8:00	0.0074	--
2/1/2012 9:00	0.0094	--	2/1/2012 9:00	SOURCE DOWN	--	2/1/2012 9:00	0.0072	--
2/1/2012 10:00	0.0088	--	2/1/2012 10:00	SOURCE DOWN	--	2/1/2012 10:00	0.0067	--
2/1/2012 11:00	0.0096	--	2/1/2012 11:00	SOURCE DOWN	--	2/1/2012 11:00	0.0075	--
2/1/2012 12:00	0.0093	--	2/1/2012 12:00	SOURCE DOWN	--	2/1/2012 12:00	0.0076	--
2/1/2012 13:00	0.0093	--	2/1/2012 13:00	SOURCE DOWN	--	2/1/2012 13:00	0.0069	--
2/1/2012 14:00	0.0093	--	2/1/2012 14:00	SOURCE DOWN	--	2/1/2012 14:00	0.0079	--
2/1/2012 15:00	0.0093	--	2/1/2012 15:00	SOURCE DOWN	--	2/1/2012 15:00	0.0071	--
2/1/2012 16:00	0.0092	--	2/1/2012 16:00	SOURCE DOWN	--	2/1/2012 16:00	0.0072	--
2/1/2012 17:00	0.0091	--	2/1/2012 17:00	SOURCE DOWN	--	2/1/2012 17:00	0.0071	--

Package Boiler No. 1 EPN 81BF01			Package Boiler No. 2 EPN 50BF02			Package Boiler No. 3 EPN 50BF03		
Date	NO_X (lb/MMBtu)	NO_X (lb/MMBtu) 30-day Rolling Average	Date	NO_X (lb/MMBtu)	NO_X (lb/MMBtu) 30-day Rolling Average	Date	NO_X (lb/MMBtu)	NO_X (lb/MMBtu) 30-day Rolling Average
2/1/2012 18:00	0.0088	--	2/1/2012 18:00	SOURCE DOWN	--	2/1/2012 18:00	0.0077	--
2/1/2012 19:00	0.0099	--	2/1/2012 19:00	SOURCE DOWN	--	2/1/2012 19:00	0.0083	--
2/1/2012 20:00	0.0093	--	2/1/2012 20:00	SOURCE DOWN	--	2/1/2012 20:00	0.0074	--
2/1/2012 21:00	0.0085	--	2/1/2012 21:00	SOURCE DOWN	--	2/1/2012 21:00	0.0069	--
2/1/2012 22:00	0.0089	--	2/1/2012 22:00	SOURCE DOWN	--	2/1/2012 22:00	0.0070	--
2/1/2012 23:00	0.0091	0.0090	2/1/2012 23:00	SOURCE DOWN	0.0000	2/1/2012 23:00	0.0071	0.0076
2/2/2012 0:00	0.0091	--	2/2/2012 0:00	SOURCE DOWN	--	2/2/2012 0:00	0.0074	--
2/2/2012 1:00	0.0090	--	2/2/2012 1:00	SOURCE DOWN	--	2/2/2012 1:00	0.0071	--
2/2/2012 2:00	0.0094	--	2/2/2012 2:00	SOURCE DOWN	--	2/2/2012 2:00	0.0071	--
2/2/2012 3:00	0.0092	--	2/2/2012 3:00	SOURCE DOWN	--	2/2/2012 3:00	0.0071	--
2/2/2012 4:00	0.0090	--	2/2/2012 4:00	SOURCE DOWN	--	2/2/2012 4:00	0.0071	--
2/2/2012 5:00	0.0096	--	2/2/2012 5:00	SOURCE DOWN	--	2/2/2012 5:00	0.0076	--
2/2/2012 6:00	0.0091	--	2/2/2012 6:00	SOURCE DOWN	--	2/2/2012 6:00	0.0104	--
2/2/2012 7:00	0.0090	--	2/2/2012 7:00	SOURCE DOWN	--	2/2/2012 7:00	0.0074	--
2/2/2012 8:00	0.0090	--	2/2/2012 8:00	SOURCE DOWN	--	2/2/2012 8:00	0.0071	--
2/2/2012 9:00	0.0093	--	2/2/2012 9:00	SOURCE DOWN	--	2/2/2012 9:00	0.0074	--
2/2/2012 10:00	0.0092	--	2/2/2012 10:00	SOURCE DOWN	--	2/2/2012 10:00	0.0070	--
2/2/2012 11:00	0.0092	--	2/2/2012 11:00	SOURCE DOWN	--	2/2/2012 11:00	0.0071	--
2/2/2012 12:00	0.0092	--	2/2/2012 12:00	SOURCE DOWN	--	2/2/2012 12:00	0.0074	--
2/2/2012 13:00	0.0092	--	2/2/2012 13:00	SOURCE DOWN	--	2/2/2012 13:00	0.0072	--
2/2/2012 14:00	0.0090	--	2/2/2012 14:00	SOURCE DOWN	--	2/2/2012 14:00	0.0072	--
2/2/2012 15:00	0.0091	--	2/2/2012 15:00	SOURCE DOWN	--	2/2/2012 15:00	0.0072	--
2/2/2012 16:00	0.0092	--	2/2/2012 16:00	SOURCE DOWN	--	2/2/2012 16:00	0.0073	--
2/2/2012 17:00	0.0091	--	2/2/2012 17:00	SOURCE DOWN	--	2/2/2012 17:00	0.0073	--
2/2/2012 18:00	0.0092	--	2/2/2012 18:00	SOURCE DOWN	--	2/2/2012 18:00	0.0075	--
2/2/2012 19:00	0.0093	--	2/2/2012 19:00	SOURCE DOWN	--	2/2/2012 19:00	0.0075	--
2/2/2012 20:00	0.0094	--	2/2/2012 20:00	SOURCE DOWN	--	2/2/2012 20:00	0.0073	--
2/2/2012 21:00	0.0093	--	2/2/2012 21:00	SOURCE DOWN	--	2/2/2012 21:00	0.0074	--
2/2/2012 22:00	0.0089	--	2/2/2012 22:00	SOURCE DOWN	--	2/2/2012 22:00	0.0071	--
2/2/2012 23:00	0.0093	0.0090	2/2/2012 23:00	SOURCE DOWN	0.0000	2/2/2012 23:00	0.0074	0.0075
2/3/2012 0:00	0.0090	--	2/3/2012 0:00	SOURCE DOWN	--	2/3/2012 0:00	0.0071	--
2/3/2012 1:00	0.0090	--	2/3/2012 1:00	SOURCE DOWN	--	2/3/2012 1:00	0.0074	--
2/3/2012 2:00	0.0090	--	2/3/2012 2:00	SOURCE DOWN	--	2/3/2012 2:00	0.0074	--
2/3/2012 3:00	0.0092	--	2/3/2012 3:00	SOURCE DOWN	--	2/3/2012 3:00	0.0074	--
2/3/2012 4:00	0.0092	--	2/3/2012 4:00	SOURCE DOWN	--	2/3/2012 4:00	0.0075	--
2/3/2012 5:00	0.0095	--	2/3/2012 5:00	SOURCE DOWN	--	2/3/2012 5:00	0.0077	--
2/3/2012 6:00	0.0094	--	2/3/2012 6:00	SOURCE DOWN	--	2/3/2012 6:00	0.0064	--
2/3/2012 7:00	0.0091	--	2/3/2012 7:00	SOURCE DOWN	--	2/3/2012 7:00	0.0073	--
2/3/2012 8:00	0.0089	--	2/3/2012 8:00	SOURCE DOWN	--	2/3/2012 8:00	0.0073	--
2/3/2012 9:00	0.0089	--	2/3/2012 9:00	SOURCE DOWN	--	2/3/2012 9:00	0.0071	--
2/3/2012 10:00	0.0090	--	2/3/2012 10:00	SOURCE DOWN	--	2/3/2012 10:00	0.0073	--

Package Boiler No. 1 EPN 81BF01			Package Boiler No. 2 EPN 50BF02			Package Boiler No. 3 EPN 50BF03		
Date	NO_X (lb/MMBtu)	NO_X (lb/MMBtu) 30-day Rolling Average	Date	NO_X (lb/MMBtu)	NO_X (lb/MMBtu) 30-day Rolling Average	Date	NO_X (lb/MMBtu)	NO_X (lb/MMBtu) 30-day Rolling Average
2/3/2012 11:00	0.0093	--	2/3/2012 11:00	SOURCE DOWN	--	2/3/2012 11:00	0.0078	--
2/3/2012 12:00	0.0093	--	2/3/2012 12:00	SOURCE DOWN	--	2/3/2012 12:00	0.0077	--
2/3/2012 13:00	0.0082	--	2/3/2012 13:00	SOURCE DOWN	--	2/3/2012 13:00	0.0072	--
2/3/2012 14:00	0.0084	--	2/3/2012 14:00	SOURCE DOWN	--	2/3/2012 14:00	0.0074	--
2/3/2012 15:00	0.0087	--	2/3/2012 15:00	SOURCE DOWN	--	2/3/2012 15:00	0.0074	--
2/3/2012 16:00	0.0086	--	2/3/2012 16:00	SOURCE DOWN	--	2/3/2012 16:00	0.0072	--
2/3/2012 17:00	0.0090	--	2/3/2012 17:00	SOURCE DOWN	--	2/3/2012 17:00	0.0072	--
2/3/2012 18:00	0.0087	--	2/3/2012 18:00	SOURCE DOWN	--	2/3/2012 18:00	0.0072	--
2/3/2012 19:00	0.0088	--	2/3/2012 19:00	SOURCE DOWN	--	2/3/2012 19:00	0.0074	--
2/3/2012 20:00	0.0088	--	2/3/2012 20:00	SOURCE DOWN	--	2/3/2012 20:00	0.0075	--
2/3/2012 21:00	0.0089	--	2/3/2012 21:00	SOURCE DOWN	--	2/3/2012 21:00	0.0078	--
2/3/2012 22:00	0.0089	--	2/3/2012 22:00	SOURCE DOWN	--	2/3/2012 22:00	0.0073	--
2/3/2012 23:00	0.0088	0.0090	2/3/2012 23:00	SOURCE DOWN	0.0000	2/3/2012 23:00	0.0071	0.0075
2/4/2012 0:00	0.0089	--	2/4/2012 0:00	SOURCE DOWN	--	2/4/2012 0:00	0.0073	--
2/4/2012 1:00	0.0089	--	2/4/2012 1:00	SOURCE DOWN	--	2/4/2012 1:00	0.0073	--
2/4/2012 2:00	0.0088	--	2/4/2012 2:00	SOURCE DOWN	--	2/4/2012 2:00	0.0073	--
2/4/2012 3:00	0.0088	--	2/4/2012 3:00	SOURCE DOWN	--	2/4/2012 3:00	0.0075	--
2/4/2012 4:00	0.0087	--	2/4/2012 4:00	SOURCE DOWN	--	2/4/2012 4:00	0.0072	--
2/4/2012 5:00	0.0088	--	2/4/2012 5:00	SOURCE DOWN	--	2/4/2012 5:00	0.0074	--
2/4/2012 6:00	0.0091	--	2/4/2012 6:00	SOURCE DOWN	--	2/4/2012 6:00	0.0080	--
2/4/2012 7:00	0.0090	--	2/4/2012 7:00	SOURCE DOWN	--	2/4/2012 7:00	0.0073	--
2/4/2012 8:00	0.0110	--	2/4/2012 8:00	SOURCE DOWN	--	2/4/2012 8:00	0.0107	--
2/4/2012 9:00	0.0110	--	2/4/2012 9:00	SOURCE DOWN	--	2/4/2012 9:00	0.0073	--
2/4/2012 10:00	0.0107	--	2/4/2012 10:00	SOURCE DOWN	--	2/4/2012 10:00	0.0076	--
2/4/2012 11:00	0.0099	--	2/4/2012 11:00	SOURCE DOWN	--	2/4/2012 11:00	0.0074	--
2/4/2012 12:00	0.0088	--	2/4/2012 12:00	SOURCE DOWN	--	2/4/2012 12:00	0.0074	--
2/4/2012 13:00	0.0083	--	2/4/2012 13:00	SOURCE DOWN	--	2/4/2012 13:00	0.0072	--
2/4/2012 14:00	0.0089	--	2/4/2012 14:00	SOURCE DOWN	--	2/4/2012 14:00	0.0074	--
2/4/2012 15:00	0.0089	--	2/4/2012 15:00	SOURCE DOWN	--	2/4/2012 15:00	0.0074	--
2/4/2012 16:00	0.0090	--	2/4/2012 16:00	SOURCE DOWN	--	2/4/2012 16:00	0.0074	--
2/4/2012 17:00	0.0090	--	2/4/2012 17:00	SOURCE DOWN	--	2/4/2012 17:00	0.0075	--
2/4/2012 18:00	0.0091	--	2/4/2012 18:00	SOURCE DOWN	--	2/4/2012 18:00	0.0074	--
2/4/2012 19:00	0.0090	--	2/4/2012 19:00	SOURCE DOWN	--	2/4/2012 19:00	0.0074	--
2/4/2012 20:00	0.0090	--	2/4/2012 20:00	SOURCE DOWN	--	2/4/2012 20:00	0.0074	--
2/4/2012 21:00	0.0091	--	2/4/2012 21:00	SOURCE DOWN	--	2/4/2012 21:00	0.0075	--
2/4/2012 22:00	0.0093	--	2/4/2012 22:00	SOURCE DOWN	--	2/4/2012 22:00	0.0073	--
2/4/2012 23:00	0.0092	0.0090	2/4/2012 23:00	SOURCE DOWN	0.0000	2/4/2012 23:00	0.0073	0.0075
2/5/2012 0:00	0.0092	--	2/5/2012 0:00	SOURCE DOWN	--	2/5/2012 0:00	0.0073	--
2/5/2012 1:00	0.0099	--	2/5/2012 1:00	SOURCE DOWN	--	2/5/2012 1:00	0.0071	--
2/5/2012 2:00	0.0098	--	2/5/2012 2:00	SOURCE DOWN	--	2/5/2012 2:00	0.0076	--
2/5/2012 3:00	0.0099	--	2/5/2012 3:00	SOURCE DOWN	--	2/5/2012 3:00	0.0071	--

Package Boiler No. 1 EPN 81BF01			Package Boiler No. 2 EPN 50BF02			Package Boiler No. 3 EPN 50BF03		
Date	NO_X (lb/MMBtu)	NO_X (lb/MMBtu) 30-day Rolling Average	Date	NO_X (lb/MMBtu)	NO_X (lb/MMBtu) 30-day Rolling Average	Date	NO_X (lb/MMBtu)	NO_X (lb/MMBtu) 30-day Rolling Average
2/5/2012 4:00	0.0094	--	2/5/2012 4:00	SOURCE DOWN	--	2/5/2012 4:00	0.0068	--
2/5/2012 5:00	0.0091	--	2/5/2012 5:00	SOURCE DOWN	--	2/5/2012 5:00	0.0073	--
2/5/2012 6:00	0.0094	--	2/5/2012 6:00	SOURCE DOWN	--	2/5/2012 6:00	0.0071	--
2/5/2012 7:00	DOWNTIME	--	2/5/2012 7:00	SOURCE DOWN	--	2/5/2012 7:00	0.0072	--
2/5/2012 8:00	DOWNTIME	--	2/5/2012 8:00	SOURCE DOWN	--	2/5/2012 8:00	0.0071	--
2/5/2012 9:00	0.0083	--	2/5/2012 9:00	SOURCE DOWN	--	2/5/2012 9:00	0.0072	--
2/5/2012 10:00	0.0088	--	2/5/2012 10:00	SOURCE DOWN	--	2/5/2012 10:00	0.0073	--
2/5/2012 11:00	0.0089	--	2/5/2012 11:00	SOURCE DOWN	--	2/5/2012 11:00	0.0073	--
2/5/2012 12:00	0.0088	--	2/5/2012 12:00	SOURCE DOWN	--	2/5/2012 12:00	0.0073	--
2/5/2012 13:00	0.0091	--	2/5/2012 13:00	SOURCE DOWN	--	2/5/2012 13:00	0.0075	--
2/5/2012 14:00	0.0089	--	2/5/2012 14:00	SOURCE DOWN	--	2/5/2012 14:00	0.0071	--
2/5/2012 15:00	0.0087	--	2/5/2012 15:00	SOURCE DOWN	--	2/5/2012 15:00	0.0072	--
2/5/2012 16:00	0.0086	--	2/5/2012 16:00	SOURCE DOWN	--	2/5/2012 16:00	0.0074	--
2/5/2012 17:00	0.0080	--	2/5/2012 17:00	SOURCE DOWN	--	2/5/2012 17:00	0.0070	--
2/5/2012 18:00	0.0084	--	2/5/2012 18:00	SOURCE DOWN	--	2/5/2012 18:00	0.0072	--
2/5/2012 19:00	0.0086	--	2/5/2012 19:00	SOURCE DOWN	--	2/5/2012 19:00	0.0073	--
2/5/2012 20:00	0.0088	--	2/5/2012 20:00	SOURCE DOWN	--	2/5/2012 20:00	0.0073	--
2/5/2012 21:00	0.0089	--	2/5/2012 21:00	SOURCE DOWN	--	2/5/2012 21:00	0.0073	--
2/5/2012 22:00	0.0085	--	2/5/2012 22:00	SOURCE DOWN	--	2/5/2012 22:00	0.0071	--
2/5/2012 23:00	0.0088	0.0090	2/5/2012 23:00	SOURCE DOWN	0.0000	2/5/2012 23:00	0.0073	0.0075
2/6/2012 0:00	0.0086	--	2/6/2012 0:00	SOURCE DOWN	--	2/6/2012 0:00	0.0074	--
2/6/2012 1:00	0.0089	--	2/6/2012 1:00	SOURCE DOWN	--	2/6/2012 1:00	0.0075	--
2/6/2012 2:00	0.0088	--	2/6/2012 2:00	SOURCE DOWN	--	2/6/2012 2:00	0.0073	--
2/6/2012 3:00	0.0086	--	2/6/2012 3:00	SOURCE DOWN	--	2/6/2012 3:00	0.0071	--
2/6/2012 4:00	0.0085	--	2/6/2012 4:00	SOURCE DOWN	--	2/6/2012 4:00	0.0072	--
2/6/2012 5:00	0.0087	--	2/6/2012 5:00	SOURCE DOWN	--	2/6/2012 5:00	0.0071	--
2/6/2012 6:00	0.0095	--	2/6/2012 6:00	SOURCE DOWN	--	2/6/2012 6:00	0.0073	--
2/6/2012 7:00	0.0089	--	2/6/2012 7:00	SOURCE DOWN	--	2/6/2012 7:00	0.0073	--
2/6/2012 8:00	0.0086	--	2/6/2012 8:00	SOURCE DOWN	--	2/6/2012 8:00	0.0076	--
2/6/2012 9:00	0.0089	--	2/6/2012 9:00	SOURCE DOWN	--	2/6/2012 9:00	0.0071	--
2/6/2012 10:00	0.0090	--	2/6/2012 10:00	SOURCE DOWN	--	2/6/2012 10:00	0.0076	--
2/6/2012 11:00	0.0090	--	2/6/2012 11:00	SOURCE DOWN	--	2/6/2012 11:00	0.0072	--
2/6/2012 12:00	0.0090	--	2/6/2012 12:00	SOURCE DOWN	--	2/6/2012 12:00	0.0075	--
2/6/2012 13:00	0.0089	--	2/6/2012 13:00	SOURCE DOWN	--	2/6/2012 13:00	0.0071	--
2/6/2012 14:00	0.0088	--	2/6/2012 14:00	SOURCE DOWN	--	2/6/2012 14:00	0.0071	--
2/6/2012 15:00	0.0088	--	2/6/2012 15:00	SOURCE DOWN	--	2/6/2012 15:00	0.0071	--
2/6/2012 16:00	0.0087	--	2/6/2012 16:00	SOURCE DOWN	--	2/6/2012 16:00	0.0072	--
2/6/2012 17:00	0.0088	--	2/6/2012 17:00	SOURCE DOWN	--	2/6/2012 17:00	0.0076	--
2/6/2012 18:00	0.0087	--	2/6/2012 18:00	SOURCE DOWN	--	2/6/2012 18:00	0.0075	--
2/6/2012 19:00	0.0088	--	2/6/2012 19:00	SOURCE DOWN	--	2/6/2012 19:00	0.0074	--
2/6/2012 20:00	0.0086	--	2/6/2012 20:00	SOURCE DOWN	--	2/6/2012 20:00	0.0071	--

Package Boiler No. 1 EPN 81BF01			Package Boiler No. 2 EPN 50BF02			Package Boiler No. 3 EPN 50BF03		
Date	NO_X (lb/MMBtu)	NO_X (lb/MMBtu) 30-day Rolling Average	Date	NO_X (lb/MMBtu)	NO_X (lb/MMBtu) 30-day Rolling Average	Date	NO_X (lb/MMBtu)	NO_X (lb/MMBtu) 30-day Rolling Average
2/6/2012 21:00	0.0087	--	2/6/2012 21:00	SOURCE DOWN	--	2/6/2012 21:00	0.0075	--
2/6/2012 22:00	0.0087	--	2/6/2012 22:00	SOURCE DOWN	--	2/6/2012 22:00	0.0072	--
2/6/2012 23:00	0.0087	0.0090	2/6/2012 23:00	SOURCE DOWN	0.0000	2/6/2012 23:00	0.0073	0.0075
2/7/2012 0:00	0.0088	--	2/7/2012 0:00	SOURCE DOWN	--	2/7/2012 0:00	0.0074	--
2/7/2012 1:00	0.0087	--	2/7/2012 1:00	SOURCE DOWN	--	2/7/2012 1:00	0.0072	--
2/7/2012 2:00	0.0087	--	2/7/2012 2:00	SOURCE DOWN	--	2/7/2012 2:00	0.0071	--
2/7/2012 3:00	0.0088	--	2/7/2012 3:00	SOURCE DOWN	--	2/7/2012 3:00	0.0075	--
2/7/2012 4:00	0.0093	--	2/7/2012 4:00	SOURCE DOWN	--	2/7/2012 4:00	0.0074	--
2/7/2012 5:00	0.0089	--	2/7/2012 5:00	SOURCE DOWN	--	2/7/2012 5:00	0.0073	--
2/7/2012 6:00	0.0090	--	2/7/2012 6:00	SOURCE DOWN	--	2/7/2012 6:00	0.0072	--
2/7/2012 7:00	0.0087	--	2/7/2012 7:00	SOURCE DOWN	--	2/7/2012 7:00	0.0073	--
2/7/2012 8:00	0.0088	--	2/7/2012 8:00	SOURCE DOWN	--	2/7/2012 8:00	0.0072	--
2/7/2012 9:00	0.0088	--	2/7/2012 9:00	SOURCE DOWN	--	2/7/2012 9:00	0.0072	--
2/7/2012 10:00	0.0089	--	2/7/2012 10:00	SOURCE DOWN	--	2/7/2012 10:00	0.0072	--
2/7/2012 11:00	0.0089	--	2/7/2012 11:00	SOURCE DOWN	--	2/7/2012 11:00	0.0073	--
2/7/2012 12:00	0.0089	--	2/7/2012 12:00	SOURCE DOWN	--	2/7/2012 12:00	0.0072	--
2/7/2012 13:00	0.0088	--	2/7/2012 13:00	SOURCE DOWN	--	2/7/2012 13:00	0.0073	--
2/7/2012 14:00	0.0088	--	2/7/2012 14:00	SOURCE DOWN	--	2/7/2012 14:00	0.0072	--
2/7/2012 15:00	0.0088	--	2/7/2012 15:00	SOURCE DOWN	--	2/7/2012 15:00	0.0072	--
2/7/2012 16:00	0.0088	--	2/7/2012 16:00	SOURCE DOWN	--	2/7/2012 16:00	0.0074	--
2/7/2012 17:00	0.0082	--	2/7/2012 17:00	SOURCE DOWN	--	2/7/2012 17:00	0.0071	--
2/7/2012 18:00	0.0085	--	2/7/2012 18:00	SOURCE DOWN	--	2/7/2012 18:00	0.0072	--
2/7/2012 19:00	0.0086	--	2/7/2012 19:00	SOURCE DOWN	--	2/7/2012 19:00	0.0072	--
2/7/2012 20:00	0.0087	--	2/7/2012 20:00	SOURCE DOWN	--	2/7/2012 20:00	0.0073	--
2/7/2012 21:00	0.0088	--	2/7/2012 21:00	SOURCE DOWN	--	2/7/2012 21:00	0.0073	--
2/7/2012 22:00	0.0081	--	2/7/2012 22:00	SOURCE DOWN	--	2/7/2012 22:00	0.0071	--
2/7/2012 23:00	0.0085	0.0090	2/7/2012 23:00	SOURCE DOWN	0.0000	2/7/2012 23:00	0.0073	0.0074
2/8/2012 0:00	0.0086	--	2/8/2012 0:00	SOURCE DOWN	--	2/8/2012 0:00	0.0071	--
2/8/2012 1:00	0.0088	--	2/8/2012 1:00	SOURCE DOWN	--	2/8/2012 1:00	0.0074	--
2/8/2012 2:00	0.0087	--	2/8/2012 2:00	SOURCE DOWN	--	2/8/2012 2:00	0.0071	--
2/8/2012 3:00	0.0087	--	2/8/2012 3:00	SOURCE DOWN	--	2/8/2012 3:00	0.0071	--
2/8/2012 4:00	0.0086	--	2/8/2012 4:00	SOURCE DOWN	--	2/8/2012 4:00	0.0072	--
2/8/2012 5:00	0.0086	--	2/8/2012 5:00	SOURCE DOWN	--	2/8/2012 5:00	0.0070	--
2/8/2012 6:00	0.0082	--	2/8/2012 6:00	SOURCE DOWN	--	2/8/2012 6:00	0.0077	--
2/8/2012 7:00	0.0085	--	2/8/2012 7:00	SOURCE DOWN	--	2/8/2012 7:00	0.0074	--
2/8/2012 8:00	0.0089	--	2/8/2012 8:00	SOURCE DOWN	--	2/8/2012 8:00	0.0072	--
2/8/2012 9:00	0.0088	--	2/8/2012 9:00	SOURCE DOWN	--	2/8/2012 9:00	0.0074	--
2/8/2012 10:00	0.0087	--	2/8/2012 10:00	SOURCE DOWN	--	2/8/2012 10:00	DOWNTIME	--
2/8/2012 11:00	0.0088	--	2/8/2012 11:00	SOURCE DOWN	--	2/8/2012 11:00	0.0074	--
2/8/2012 12:00	0.0089	--	2/8/2012 12:00	SOURCE DOWN	--	2/8/2012 12:00	0.0074	--
2/8/2012 13:00	0.0090	--	2/8/2012 13:00	SOURCE DOWN	--	2/8/2012 13:00	0.0081	--

Package Boiler No. 1 EPN 81BF01			Package Boiler No. 2 EPN 50BF02			Package Boiler No. 3 EPN 50BF03		
Date	NO_X (lb/MMBtu)	NO_X (lb/MMBtu) 30-day Rolling Average	Date	NO_X (lb/MMBtu)	NO_X (lb/MMBtu) 30-day Rolling Average	Date	NO_X (lb/MMBtu)	NO_X (lb/MMBtu) 30-day Rolling Average
2/8/2012 14:00	0.0088	--	2/8/2012 14:00	SOURCE DOWN	--	2/8/2012 14:00	0.0075	--
2/8/2012 15:00	0.0085	--	2/8/2012 15:00	SOURCE DOWN	--	2/8/2012 15:00	0.0079	--
2/8/2012 16:00	0.0088	--	2/8/2012 16:00	SOURCE DOWN	--	2/8/2012 16:00	0.0081	--
2/8/2012 17:00	0.0086	--	2/8/2012 17:00	SOURCE DOWN	--	2/8/2012 17:00	0.0074	--
2/8/2012 18:00	0.0090	--	2/8/2012 18:00	SOURCE DOWN	--	2/8/2012 18:00	0.0075	--
2/8/2012 19:00	0.0088	--	2/8/2012 19:00	SOURCE DOWN	--	2/8/2012 19:00	0.0074	--
2/8/2012 20:00	0.0079	--	2/8/2012 20:00	SOURCE DOWN	--	2/8/2012 20:00	0.0071	--
2/8/2012 21:00	0.0088	--	2/8/2012 21:00	SOURCE DOWN	--	2/8/2012 21:00	0.0074	--
2/8/2012 22:00	0.0087	--	2/8/2012 22:00	SOURCE DOWN	--	2/8/2012 22:00	0.0076	--
2/8/2012 23:00	0.0089	0.0090	2/8/2012 23:00	SOURCE DOWN	0.0000	2/8/2012 23:00	0.0076	0.0074
2/9/2012 0:00	0.0088	--	2/9/2012 0:00	SOURCE DOWN	--	2/9/2012 0:00	0.0070	--
2/9/2012 1:00	0.0087	--	2/9/2012 1:00	SOURCE DOWN	--	2/9/2012 1:00	0.0072	--
2/9/2012 2:00	0.0088	--	2/9/2012 2:00	SOURCE DOWN	--	2/9/2012 2:00	0.0074	--
2/9/2012 3:00	0.0086	--	2/9/2012 3:00	SOURCE DOWN	--	2/9/2012 3:00	0.0071	--
2/9/2012 4:00	0.0087	--	2/9/2012 4:00	SOURCE DOWN	--	2/9/2012 4:00	0.0073	--
2/9/2012 5:00	0.0086	--	2/9/2012 5:00	SOURCE DOWN	--	2/9/2012 5:00	0.0073	--
2/9/2012 6:00	0.0091	--	2/9/2012 6:00	SOURCE DOWN	--	2/9/2012 6:00	SOURCE DOWN	--
2/9/2012 7:00	0.0085	--	2/9/2012 7:00	SOURCE DOWN	--	2/9/2012 7:00	0.0069	--
2/9/2012 8:00	DOWNTIME	--	2/9/2012 8:00	SOURCE DOWN	--	2/9/2012 8:00	0.0073	--
2/9/2012 9:00	0.0083	--	2/9/2012 9:00	SOURCE DOWN	--	2/9/2012 9:00	0.0070	--
2/9/2012 10:00	0.0086	--	2/9/2012 10:00	SOURCE DOWN	--	2/9/2012 10:00	0.0074	--
2/9/2012 11:00	0.0087	--	2/9/2012 11:00	SOURCE DOWN	--	2/9/2012 11:00	0.0075	--
2/9/2012 12:00	0.0086	--	2/9/2012 12:00	SOURCE DOWN	--	2/9/2012 12:00	0.0073	--
2/9/2012 13:00	0.0087	--	2/9/2012 13:00	SOURCE DOWN	--	2/9/2012 13:00	0.0076	--
2/9/2012 14:00	0.0084	--	2/9/2012 14:00	SOURCE DOWN	--	2/9/2012 14:00	0.0075	--
2/9/2012 15:00	0.0085	--	2/9/2012 15:00	SOURCE DOWN	--	2/9/2012 15:00	0.0074	--
2/9/2012 16:00	0.0085	--	2/9/2012 16:00	SOURCE DOWN	--	2/9/2012 16:00	0.0077	--
2/9/2012 17:00	0.0084	--	2/9/2012 17:00	SOURCE DOWN	--	2/9/2012 17:00	0.0075	--
2/9/2012 18:00	0.0085	--	2/9/2012 18:00	SOURCE DOWN	--	2/9/2012 18:00	0.0076	--
2/9/2012 19:00	0.0086	--	2/9/2012 19:00	SOURCE DOWN	--	2/9/2012 19:00	0.0078	--
2/9/2012 20:00	0.0085	--	2/9/2012 20:00	SOURCE DOWN	--	2/9/2012 20:00	0.0074	--
2/9/2012 21:00	0.0084	--	2/9/2012 21:00	SOURCE DOWN	--	2/9/2012 21:00	0.0076	--
2/9/2012 22:00	0.0084	--	2/9/2012 22:00	SOURCE DOWN	--	2/9/2012 22:00	0.0075	--
2/9/2012 23:00	0.0086	0.0090	2/9/2012 23:00	SOURCE DOWN	0.0000	2/9/2012 23:00	0.0078	0.0074
2/10/2012 0:00	0.0086	--	2/10/2012 0:00	SOURCE DOWN	--	2/10/2012 0:00	0.0078	--
2/10/2012 1:00	0.0086	--	2/10/2012 1:00	SOURCE DOWN	--	2/10/2012 1:00	0.0077	--
2/10/2012 2:00	0.0088	--	2/10/2012 2:00	SOURCE DOWN	--	2/10/2012 2:00	0.0078	--
2/10/2012 3:00	0.0088	--	2/10/2012 3:00	SOURCE DOWN	--	2/10/2012 3:00	0.0076	--
2/10/2012 4:00	0.0086	--	2/10/2012 4:00	SOURCE DOWN	--	2/10/2012 4:00	0.0077	--
2/10/2012 5:00	0.0087	--	2/10/2012 5:00	SOURCE DOWN	--	2/10/2012 5:00	0.0078	--
2/10/2012 6:00	0.0089	--	2/10/2012 6:00	SOURCE DOWN	--	2/10/2012 6:00	0.0089	--

Package Boiler No. 1 EPN 81BF01			Package Boiler No. 2 EPN 50BF02			Package Boiler No. 3 EPN 50BF03		
Date	NO_X (lb/MMBtu)	NO_X (lb/MMBtu) 30-day Rolling Average	Date	NO_X (lb/MMBtu)	NO_X (lb/MMBtu) 30-day Rolling Average	Date	NO_X (lb/MMBtu)	NO_X (lb/MMBtu) 30-day Rolling Average
2/10/2012 7:00	0.0085	--	2/10/2012 7:00	SOURCE DOWN	--	2/10/2012 7:00	0.0077	--
2/10/2012 8:00	0.0086	--	2/10/2012 8:00	SOURCE DOWN	--	2/10/2012 8:00	0.0076	--
2/10/2012 9:00	0.0086	--	2/10/2012 9:00	SOURCE DOWN	--	2/10/2012 9:00	0.0077	--
2/10/2012 10:00	0.0085	--	2/10/2012 10:00	SOURCE DOWN	--	2/10/2012 10:00	0.0078	--
2/10/2012 11:00	0.0088	--	2/10/2012 11:00	SOURCE DOWN	--	2/10/2012 11:00	0.0076	--
2/10/2012 12:00	0.0087	--	2/10/2012 12:00	SOURCE DOWN	--	2/10/2012 12:00	0.0078	--
2/10/2012 13:00	0.0087	--	2/10/2012 13:00	SOURCE DOWN	--	2/10/2012 13:00	0.0080	--
2/10/2012 14:00	0.0086	--	2/10/2012 14:00	SOURCE DOWN	--	2/10/2012 14:00	0.0077	--
2/10/2012 15:00	0.0088	--	2/10/2012 15:00	SOURCE DOWN	--	2/10/2012 15:00	0.0080	--
2/10/2012 16:00	0.0086	--	2/10/2012 16:00	SOURCE DOWN	--	2/10/2012 16:00	0.0077	--
2/10/2012 17:00	0.0087	--	2/10/2012 17:00	SOURCE DOWN	--	2/10/2012 17:00	0.0082	--
2/10/2012 18:00	0.0085	--	2/10/2012 18:00	SOURCE DOWN	--	2/10/2012 18:00	0.0075	--
2/10/2012 19:00	0.0084	--	2/10/2012 19:00	SOURCE DOWN	--	2/10/2012 19:00	0.0077	--
2/10/2012 20:00	0.0086	--	2/10/2012 20:00	SOURCE DOWN	--	2/10/2012 20:00	0.0077	--
2/10/2012 21:00	0.0091	--	2/10/2012 21:00	SOURCE DOWN	--	2/10/2012 21:00	0.0080	--
2/10/2012 22:00	0.0085	--	2/10/2012 22:00	SOURCE DOWN	--	2/10/2012 22:00	0.0075	--
2/10/2012 23:00	0.0084	0.0090	2/10/2012 23:00	SOURCE DOWN	0.0000	2/10/2012 23:00	0.0076	0.0074
2/11/2012 0:00	0.0081	--	2/11/2012 0:00	SOURCE DOWN	--	2/11/2012 0:00	0.0076	--
2/11/2012 1:00	0.0081	--	2/11/2012 1:00	SOURCE DOWN	--	2/11/2012 1:00	0.0076	--
2/11/2012 2:00	0.0085	--	2/11/2012 2:00	SOURCE DOWN	--	2/11/2012 2:00	0.0079	--
2/11/2012 3:00	0.0085	--	2/11/2012 3:00	SOURCE DOWN	--	2/11/2012 3:00	0.0077	--
2/11/2012 4:00	0.0086	--	2/11/2012 4:00	SOURCE DOWN	--	2/11/2012 4:00	0.0078	--
2/11/2012 5:00	0.0085	--	2/11/2012 5:00	SOURCE DOWN	--	2/11/2012 5:00	0.0077	--
2/11/2012 6:00	0.0089	--	2/11/2012 6:00	SOURCE DOWN	--	2/11/2012 6:00	0.0080	--
2/11/2012 7:00	0.0086	--	2/11/2012 7:00	SOURCE DOWN	--	2/11/2012 7:00	0.0077	--
2/11/2012 8:00	0.0088	--	2/11/2012 8:00	SOURCE DOWN	--	2/11/2012 8:00	0.0078	--
2/11/2012 9:00	0.0088	--	2/11/2012 9:00	SOURCE DOWN	--	2/11/2012 9:00	0.0081	--
2/11/2012 10:00	0.0093	--	2/11/2012 10:00	SOURCE DOWN	--	2/11/2012 10:00	0.0083	--
2/11/2012 11:00	0.0090	--	2/11/2012 11:00	SOURCE DOWN	--	2/11/2012 11:00	0.0077	--
2/11/2012 12:00	0.0088	--	2/11/2012 12:00	SOURCE DOWN	--	2/11/2012 12:00	0.0080	--
2/11/2012 13:00	0.0082	--	2/11/2012 13:00	SOURCE DOWN	--	2/11/2012 13:00	0.0078	--
2/11/2012 14:00	0.0085	--	2/11/2012 14:00	SOURCE DOWN	--	2/11/2012 14:00	0.0077	--
2/11/2012 15:00	0.0086	--	2/11/2012 15:00	SOURCE DOWN	--	2/11/2012 15:00	0.0081	--
2/11/2012 16:00	0.0088	--	2/11/2012 16:00	SOURCE DOWN	--	2/11/2012 16:00	0.0080	--
2/11/2012 17:00	0.0087	--	2/11/2012 17:00	SOURCE DOWN	--	2/11/2012 17:00	0.0082	--
2/11/2012 18:00	0.0087	--	2/11/2012 18:00	SOURCE DOWN	--	2/11/2012 18:00	0.0079	--
2/11/2012 19:00	0.0088	--	2/11/2012 19:00	SOURCE DOWN	--	2/11/2012 19:00	0.0078	--
2/11/2012 20:00	0.0087	--	2/11/2012 20:00	SOURCE DOWN	--	2/11/2012 20:00	0.0075	--
2/11/2012 21:00	0.0085	--	2/11/2012 21:00	SOURCE DOWN	--	2/11/2012 21:00	0.0078	--
2/11/2012 22:00	0.0084	--	2/11/2012 22:00	SOURCE DOWN	--	2/11/2012 22:00	0.0077	--
2/11/2012 23:00	0.0085	0.0090	2/11/2012 23:00	SOURCE DOWN	0.0000	2/11/2012 23:00	0.0077	0.0074

Package Boiler No. 1 EPN 81BF01			Package Boiler No. 2 EPN 50BF02			Package Boiler No. 3 EPN 50BF03		
Date	NO_X (lb/MMBtu)	NO_X (lb/MMBtu) 30-day Rolling Average	Date	NO_X (lb/MMBtu)	NO_X (lb/MMBtu) 30-day Rolling Average	Date	NO_X (lb/MMBtu)	NO_X (lb/MMBtu) 30-day Rolling Average
2/12/2012 0:00	0.0086	--	2/12/2012 0:00	SOURCE DOWN	--	2/12/2012 0:00	0.0078	--
2/12/2012 1:00	0.0086	--	2/12/2012 1:00	SOURCE DOWN	--	2/12/2012 1:00	0.0075	--
2/12/2012 2:00	0.0086	--	2/12/2012 2:00	SOURCE DOWN	--	2/12/2012 2:00	0.0076	--
2/12/2012 3:00	0.0086	--	2/12/2012 3:00	SOURCE DOWN	--	2/12/2012 3:00	0.0077	--
2/12/2012 4:00	0.0086	--	2/12/2012 4:00	SOURCE DOWN	--	2/12/2012 4:00	0.0077	--
2/12/2012 5:00	0.0086	--	2/12/2012 5:00	SOURCE DOWN	--	2/12/2012 5:00	0.0078	--
2/12/2012 6:00	0.0100	--	2/12/2012 6:00	SOURCE DOWN	--	2/12/2012 6:00	0.0062	--
2/12/2012 7:00	0.0091	--	2/12/2012 7:00	SOURCE DOWN	--	2/12/2012 7:00	0.0067	--
2/12/2012 8:00	0.0088	--	2/12/2012 8:00	SOURCE DOWN	--	2/12/2012 8:00	0.0076	--
2/12/2012 9:00	0.0088	--	2/12/2012 9:00	SOURCE DOWN	--	2/12/2012 9:00	0.0077	--
2/12/2012 10:00	0.0087	--	2/12/2012 10:00	SOURCE DOWN	--	2/12/2012 10:00	0.0076	--
2/12/2012 11:00	0.0087	--	2/12/2012 11:00	SOURCE DOWN	--	2/12/2012 11:00	0.0077	--
2/12/2012 12:00	0.0087	--	2/12/2012 12:00	SOURCE DOWN	--	2/12/2012 12:00	0.0077	--
2/12/2012 13:00	0.0086	--	2/12/2012 13:00	SOURCE DOWN	--	2/12/2012 13:00	0.0076	--
2/12/2012 14:00	0.0088	--	2/12/2012 14:00	SOURCE DOWN	--	2/12/2012 14:00	0.0078	--
2/12/2012 15:00	0.0088	--	2/12/2012 15:00	SOURCE DOWN	--	2/12/2012 15:00	0.0077	--
2/12/2012 16:00	0.0086	--	2/12/2012 16:00	SOURCE DOWN	--	2/12/2012 16:00	0.0076	--
2/12/2012 17:00	0.0085	--	2/12/2012 17:00	SOURCE DOWN	--	2/12/2012 17:00	0.0076	--
2/12/2012 18:00	0.0086	--	2/12/2012 18:00	SOURCE DOWN	--	2/12/2012 18:00	0.0078	--
2/12/2012 19:00	0.0085	--	2/12/2012 19:00	SOURCE DOWN	--	2/12/2012 19:00	0.0073	--
2/12/2012 20:00	0.0084	--	2/12/2012 20:00	SOURCE DOWN	--	2/12/2012 20:00	0.0077	--
2/12/2012 21:00	0.0086	--	2/12/2012 21:00	SOURCE DOWN	--	2/12/2012 21:00	0.0080	--
2/12/2012 22:00	0.0085	--	2/12/2012 22:00	SOURCE DOWN	--	2/12/2012 22:00	0.0079	--
2/12/2012 23:00	0.0086	0.0090	2/12/2012 23:00	SOURCE DOWN	0.0000	2/12/2012 23:00	0.0079	0.0075
2/13/2012 0:00	0.0086	--	2/13/2012 0:00	SOURCE DOWN	--	2/13/2012 0:00	0.0079	--
2/13/2012 1:00	0.0085	--	2/13/2012 1:00	SOURCE DOWN	--	2/13/2012 1:00	0.0079	--
2/13/2012 2:00	0.0085	--	2/13/2012 2:00	SOURCE DOWN	--	2/13/2012 2:00	0.0078	--
2/13/2012 3:00	0.0086	--	2/13/2012 3:00	SOURCE DOWN	--	2/13/2012 3:00	0.0078	--
2/13/2012 4:00	0.0086	--	2/13/2012 4:00	SOURCE DOWN	--	2/13/2012 4:00	0.0080	--
2/13/2012 5:00	0.0086	--	2/13/2012 5:00	SOURCE DOWN	--	2/13/2012 5:00	0.0077	--
2/13/2012 6:00	0.0093	--	2/13/2012 6:00	SOURCE DOWN	--	2/13/2012 6:00	0.0068	--
2/13/2012 7:00	0.0088	--	2/13/2012 7:00	SOURCE DOWN	--	2/13/2012 7:00	0.0075	--
2/13/2012 8:00	0.0086	--	2/13/2012 8:00	SOURCE DOWN	--	2/13/2012 8:00	0.0079	--
2/13/2012 9:00	0.0085	--	2/13/2012 9:00	SOURCE DOWN	--	2/13/2012 9:00	0.0078	--
2/13/2012 10:00	0.0085	--	2/13/2012 10:00	SOURCE DOWN	--	2/13/2012 10:00	0.0077	--
2/13/2012 11:00	0.0089	--	2/13/2012 11:00	SOURCE DOWN	--	2/13/2012 11:00	0.0078	--
2/13/2012 12:00	0.0088	--	2/13/2012 12:00	SOURCE DOWN	--	2/13/2012 12:00	0.0075	--
2/13/2012 13:00	0.0087	--	2/13/2012 13:00	SOURCE DOWN	--	2/13/2012 13:00	0.0090	--
2/13/2012 14:00	0.0080	--	2/13/2012 14:00	SOURCE DOWN	--	2/13/2012 14:00	0.0080	--
2/13/2012 15:00	0.0086	--	2/13/2012 15:00	SOURCE DOWN	--	2/13/2012 15:00	0.0078	--
2/13/2012 16:00	0.0087	--	2/13/2012 16:00	SOURCE DOWN	--	2/13/2012 16:00	0.0079	--

Package Boiler No. 1 EPN 81BF01			Package Boiler No. 2 EPN 50BF02			Package Boiler No. 3 EPN 50BF03		
Date	NO_X (lb/MMBtu)	NO_X (lb/MMBtu) 30-day Rolling Average	Date	NO_X (lb/MMBtu)	NO_X (lb/MMBtu) 30-day Rolling Average	Date	NO_X (lb/MMBtu)	NO_X (lb/MMBtu) 30-day Rolling Average
2/13/2012 17:00	0.0089	--	2/13/2012 17:00	SOURCE DOWN	--	2/13/2012 17:00	0.0087	--
2/13/2012 18:00	0.0086	--	2/13/2012 18:00	SOURCE DOWN	--	2/13/2012 18:00	0.0077	--
2/13/2012 19:00	0.0086	--	2/13/2012 19:00	SOURCE DOWN	--	2/13/2012 19:00	0.0077	--
2/13/2012 20:00	0.0085	--	2/13/2012 20:00	SOURCE DOWN	--	2/13/2012 20:00	0.0078	--
2/13/2012 21:00	0.0085	--	2/13/2012 21:00	SOURCE DOWN	--	2/13/2012 21:00	0.0073	--
2/13/2012 22:00	0.0086	--	2/13/2012 22:00	SOURCE DOWN	--	2/13/2012 22:00	0.0081	--
2/13/2012 23:00	0.0082	0.0089	2/13/2012 23:00	SOURCE DOWN	0.0000	2/13/2012 23:00	0.0076	0.0075
2/14/2012 0:00	0.0084	--	2/14/2012 0:00	SOURCE DOWN	--	2/14/2012 0:00	0.0076	--
2/14/2012 1:00	0.0086	--	2/14/2012 1:00	SOURCE DOWN	--	2/14/2012 1:00	0.0079	--
2/14/2012 2:00	0.0085	--	2/14/2012 2:00	SOURCE DOWN	--	2/14/2012 2:00	0.0080	--
2/14/2012 3:00	0.0086	--	2/14/2012 3:00	SOURCE DOWN	--	2/14/2012 3:00	0.0078	--
2/14/2012 4:00	0.0086	--	2/14/2012 4:00	SOURCE DOWN	--	2/14/2012 4:00	0.0079	--
2/14/2012 5:00	0.0086	--	2/14/2012 5:00	SOURCE DOWN	--	2/14/2012 5:00	0.0080	--
2/14/2012 6:00	0.0087	--	2/14/2012 6:00	SOURCE DOWN	--	2/14/2012 6:00	0.0074	--
2/14/2012 7:00	0.0085	--	2/14/2012 7:00	SOURCE DOWN	--	2/14/2012 7:00	0.0078	--
2/14/2012 8:00	0.0086	--	2/14/2012 8:00	SOURCE DOWN	--	2/14/2012 8:00	0.0078	--
2/14/2012 9:00	0.0086	--	2/14/2012 9:00	SOURCE DOWN	--	2/14/2012 9:00	0.0078	--
2/14/2012 10:00	0.0087	--	2/14/2012 10:00	SOURCE DOWN	--	2/14/2012 10:00	0.0080	--
2/14/2012 11:00	0.0086	--	2/14/2012 11:00	SOURCE DOWN	--	2/14/2012 11:00	0.0076	--
2/14/2012 12:00	0.0085	--	2/14/2012 12:00	SOURCE DOWN	--	2/14/2012 12:00	0.0079	--
2/14/2012 13:00	0.0089	--	2/14/2012 13:00	SOURCE DOWN	--	2/14/2012 13:00	0.0139	--
2/14/2012 14:00	0.0097	--	2/14/2012 14:00	SOURCE DOWN	--	2/14/2012 14:00	0.0095	--
2/14/2012 15:00	0.0088	--	2/14/2012 15:00	SOURCE DOWN	--	2/14/2012 15:00	0.0081	--
2/14/2012 16:00	0.0084	--	2/14/2012 16:00	SOURCE DOWN	--	2/14/2012 16:00	0.0073	--
2/14/2012 17:00	0.0086	--	2/14/2012 17:00	SOURCE DOWN	--	2/14/2012 17:00	0.0072	--
2/14/2012 18:00	0.0086	--	2/14/2012 18:00	SOURCE DOWN	--	2/14/2012 18:00	0.0088	--
2/14/2012 19:00	0.0087	--	2/14/2012 19:00	SOURCE DOWN	--	2/14/2012 19:00	0.0076	--
2/14/2012 20:00	0.0083	--	2/14/2012 20:00	SOURCE DOWN	--	2/14/2012 20:00	0.0070	--
2/14/2012 21:00	0.0085	--	2/14/2012 21:00	SOURCE DOWN	--	2/14/2012 21:00	0.0074	--
2/14/2012 22:00	0.0086	--	2/14/2012 22:00	SOURCE DOWN	--	2/14/2012 22:00	0.0072	--
2/14/2012 23:00	0.0086	0.0089	2/14/2012 23:00	SOURCE DOWN	0.0000	2/14/2012 23:00	0.0073	0.0075
2/15/2012 0:00	0.0086	--	2/15/2012 0:00	SOURCE DOWN	--	2/15/2012 0:00	0.0074	--
2/15/2012 1:00	0.0086	--	2/15/2012 1:00	SOURCE DOWN	--	2/15/2012 1:00	0.0072	--
2/15/2012 2:00	0.0086	--	2/15/2012 2:00	SOURCE DOWN	--	2/15/2012 2:00	0.0072	--
2/15/2012 3:00	0.0086	--	2/15/2012 3:00	SOURCE DOWN	--	2/15/2012 3:00	0.0071	--
2/15/2012 4:00	0.0086	--	2/15/2012 4:00	SOURCE DOWN	--	2/15/2012 4:00	0.0073	--
2/15/2012 5:00	0.0086	--	2/15/2012 5:00	SOURCE DOWN	--	2/15/2012 5:00	0.0073	--
2/15/2012 6:00	0.0091	--	2/15/2012 6:00	SOURCE DOWN	--	2/15/2012 6:00	0.0064	--
2/15/2012 7:00	0.0078	--	2/15/2012 7:00	SOURCE DOWN	--	2/15/2012 7:00	0.0071	--
2/15/2012 8:00	0.0081	--	2/15/2012 8:00	SOURCE DOWN	--	2/15/2012 8:00	0.0071	--
2/15/2012 9:00	0.0083	--	2/15/2012 9:00	SOURCE DOWN	--	2/15/2012 9:00	0.0088	--

Package Boiler No. 1 EPN 81BF01			Package Boiler No. 2 EPN 50BF02			Package Boiler No. 3 EPN 50BF03		
Date	NO_X (lb/MMBtu)	NO_X (lb/MMBtu) 30-day Rolling Average	Date	NO_X (lb/MMBtu)	NO_X (lb/MMBtu) 30-day Rolling Average	Date	NO_X (lb/MMBtu)	NO_X (lb/MMBtu) 30-day Rolling Average
2/15/2012 10:00	0.0083	--	2/15/2012 10:00	SOURCE DOWN	--	2/15/2012 10:00	0.0075	--
2/15/2012 11:00	0.0085	--	2/15/2012 11:00	SOURCE DOWN	--	2/15/2012 11:00	0.0074	--
2/15/2012 12:00	0.0086	--	2/15/2012 12:00	SOURCE DOWN	--	2/15/2012 12:00	0.0073	--
2/15/2012 13:00	0.0086	--	2/15/2012 13:00	SOURCE DOWN	--	2/15/2012 13:00	0.0077	--
2/15/2012 14:00	0.0085	--	2/15/2012 14:00	SOURCE DOWN	--	2/15/2012 14:00	0.0075	--
2/15/2012 15:00	0.0085	--	2/15/2012 15:00	SOURCE DOWN	--	2/15/2012 15:00	0.0074	--
2/15/2012 16:00	0.0085	--	2/15/2012 16:00	SOURCE DOWN	--	2/15/2012 16:00	0.0074	--
2/15/2012 17:00	0.0085	--	2/15/2012 17:00	SOURCE DOWN	--	2/15/2012 17:00	0.0074	--
2/15/2012 18:00	0.0086	--	2/15/2012 18:00	SOURCE DOWN	--	2/15/2012 18:00	0.0076	--
2/15/2012 19:00	0.0088	--	2/15/2012 19:00	SOURCE DOWN	--	2/15/2012 19:00	0.0077	--
2/15/2012 20:00	0.0084	--	2/15/2012 20:00	SOURCE DOWN	--	2/15/2012 20:00	0.0074	--
2/15/2012 21:00	0.0085	--	2/15/2012 21:00	SOURCE DOWN	--	2/15/2012 21:00	0.0075	--
2/15/2012 22:00	0.0085	--	2/15/2012 22:00	SOURCE DOWN	--	2/15/2012 22:00	0.0073	--
2/15/2012 23:00	0.0087	0.0089	2/15/2012 23:00	SOURCE DOWN	0.0000	2/15/2012 23:00	0.0075	0.0075
2/16/2012 0:00	0.0086	--	2/16/2012 0:00	SOURCE DOWN	--	2/16/2012 0:00	0.0074	--
2/16/2012 1:00	0.0087	--	2/16/2012 1:00	SOURCE DOWN	--	2/16/2012 1:00	0.0077	--
2/16/2012 2:00	0.0088	--	2/16/2012 2:00	SOURCE DOWN	--	2/16/2012 2:00	0.0074	--
2/16/2012 3:00	0.0087	--	2/16/2012 3:00	SOURCE DOWN	--	2/16/2012 3:00	0.0075	--
2/16/2012 4:00	0.0085	--	2/16/2012 4:00	SOURCE DOWN	--	2/16/2012 4:00	0.0073	--
2/16/2012 5:00	0.0086	--	2/16/2012 5:00	SOURCE DOWN	--	2/16/2012 5:00	0.0073	--
2/16/2012 6:00	0.0089	--	2/16/2012 6:00	SOURCE DOWN	--	2/16/2012 6:00	0.0089	--
2/16/2012 7:00	0.0087	--	2/16/2012 7:00	SOURCE DOWN	--	2/16/2012 7:00	0.0074	--
2/16/2012 8:00	0.0087	--	2/16/2012 8:00	SOURCE DOWN	--	2/16/2012 8:00	0.0075	--
2/16/2012 9:00	0.0086	--	2/16/2012 9:00	SOURCE DOWN	--	2/16/2012 9:00	0.0070	--
2/16/2012 10:00	0.0087	--	2/16/2012 10:00	SOURCE DOWN	--	2/16/2012 10:00	0.0075	--
2/16/2012 11:00	0.0086	--	2/16/2012 11:00	SOURCE DOWN	--	2/16/2012 11:00	0.0084	--
2/16/2012 12:00	0.0088	--	2/16/2012 12:00	SOURCE DOWN	--	2/16/2012 12:00	0.0080	--
2/16/2012 13:00	0.0095	--	2/16/2012 13:00	SOURCE DOWN	--	2/16/2012 13:00	0.0081	--
2/16/2012 14:00	0.0089	--	2/16/2012 14:00	SOURCE DOWN	--	2/16/2012 14:00	0.0076	--
2/16/2012 15:00	0.0091	--	2/16/2012 15:00	SOURCE DOWN	--	2/16/2012 15:00	0.0081	--
2/16/2012 16:00	0.0083	--	2/16/2012 16:00	SOURCE DOWN	--	2/16/2012 16:00	0.0069	--
2/16/2012 17:00	0.0084	--	2/16/2012 17:00	SOURCE DOWN	--	2/16/2012 17:00	0.0075	--
2/16/2012 18:00	0.0086	--	2/16/2012 18:00	SOURCE DOWN	--	2/16/2012 18:00	0.0074	--
2/16/2012 19:00	0.0084	--	2/16/2012 19:00	SOURCE DOWN	--	2/16/2012 19:00	0.0068	--
2/16/2012 20:00	0.0083	--	2/16/2012 20:00	SOURCE DOWN	--	2/16/2012 20:00	0.0072	--
2/16/2012 21:00	0.0083	--	2/16/2012 21:00	SOURCE DOWN	--	2/16/2012 21:00	0.0084	--
2/16/2012 22:00	0.0084	--	2/16/2012 22:00	SOURCE DOWN	--	2/16/2012 22:00	0.0074	--
2/16/2012 23:00	0.0086	0.0089	2/16/2012 23:00	SOURCE DOWN	0.0000	2/16/2012 23:00	0.0073	0.0075
2/17/2012 0:00	0.0087	--	2/17/2012 0:00	SOURCE DOWN	--	2/17/2012 0:00	0.0076	--
2/17/2012 1:00	0.0087	--	2/17/2012 1:00	SOURCE DOWN	--	2/17/2012 1:00	0.0074	--
2/17/2012 2:00	0.0087	--	2/17/2012 2:00	SOURCE DOWN	--	2/17/2012 2:00	0.0072	--

Package Boiler No. 1 EPN 81BF01			Package Boiler No. 2 EPN 50BF02			Package Boiler No. 3 EPN 50BF03		
Date	NO_X (lb/MMBtu)	NO_X (lb/MMBtu) 30-day Rolling Average	Date	NO_X (lb/MMBtu)	NO_X (lb/MMBtu) 30-day Rolling Average	Date	NO_X (lb/MMBtu)	NO_X (lb/MMBtu) 30-day Rolling Average
2/17/2012 3:00	0.0087	--	2/17/2012 3:00	SOURCE DOWN	--	2/17/2012 3:00	0.0077	--
2/17/2012 4:00	0.0086	--	2/17/2012 4:00	SOURCE DOWN	--	2/17/2012 4:00	0.0072	--
2/17/2012 5:00	0.0086	--	2/17/2012 5:00	SOURCE DOWN	--	2/17/2012 5:00	0.0078	--
2/17/2012 6:00	0.0090	--	2/17/2012 6:00	SOURCE DOWN	--	2/17/2012 6:00	0.0071	--
2/17/2012 7:00	0.0085	--	2/17/2012 7:00	SOURCE DOWN	--	2/17/2012 7:00	0.0073	--
2/17/2012 8:00	0.0087	--	2/17/2012 8:00	SOURCE DOWN	--	2/17/2012 8:00	0.0081	--
2/17/2012 9:00	0.0080	--	2/17/2012 9:00	SOURCE DOWN	--	2/17/2012 9:00	0.0069	--
2/17/2012 10:00	0.0082	--	2/17/2012 10:00	SOURCE DOWN	--	2/17/2012 10:00	0.0076	--
2/17/2012 11:00	0.0084	--	2/17/2012 11:00	SOURCE DOWN	--	2/17/2012 11:00	0.0075	--
2/17/2012 12:00	0.0092	--	2/17/2012 12:00	SOURCE DOWN	--	2/17/2012 12:00	0.0085	--
2/17/2012 13:00	0.0093	--	2/17/2012 13:00	SOURCE DOWN	--	2/17/2012 13:00	0.0068	--
2/17/2012 14:00	0.0086	--	2/17/2012 14:00	SOURCE DOWN	--	2/17/2012 14:00	0.0074	--
2/17/2012 15:00	0.0082	--	2/17/2012 15:00	SOURCE DOWN	--	2/17/2012 15:00	0.0085	--
2/17/2012 16:00	0.0081	--	2/17/2012 16:00	SOURCE DOWN	--	2/17/2012 16:00	0.0084	--
2/17/2012 17:00	0.0081	--	2/17/2012 17:00	SOURCE DOWN	--	2/17/2012 17:00	0.0072	--
2/17/2012 18:00	0.0086	--	2/17/2012 18:00	SOURCE DOWN	--	2/17/2012 18:00	0.0061	--
2/17/2012 19:00	0.0087	--	2/17/2012 19:00	SOURCE DOWN	--	2/17/2012 19:00	0.0066	--
2/17/2012 20:00	0.0086	--	2/17/2012 20:00	SOURCE DOWN	--	2/17/2012 20:00	0.0074	--
2/17/2012 21:00	0.0086	--	2/17/2012 21:00	SOURCE DOWN	--	2/17/2012 21:00	0.0068	--
2/17/2012 22:00	0.0086	--	2/17/2012 22:00	SOURCE DOWN	--	2/17/2012 22:00	0.0075	--
2/17/2012 23:00	0.0084	0.0089	2/17/2012 23:00	SOURCE DOWN	0.0000	2/17/2012 23:00	0.0074	0.0075
2/18/2012 0:00	0.0084	--	2/18/2012 0:00	SOURCE DOWN	--	2/18/2012 0:00	0.0079	--
2/18/2012 1:00	0.0085	--	2/18/2012 1:00	SOURCE DOWN	--	2/18/2012 1:00	0.0073	--
2/18/2012 2:00	0.0086	--	2/18/2012 2:00	SOURCE DOWN	--	2/18/2012 2:00	0.0077	--
2/18/2012 3:00	0.0086	--	2/18/2012 3:00	SOURCE DOWN	--	2/18/2012 3:00	0.0074	--
2/18/2012 4:00	0.0086	--	2/18/2012 4:00	SOURCE DOWN	--	2/18/2012 4:00	0.0077	--
2/18/2012 5:00	0.0083	--	2/18/2012 5:00	SOURCE DOWN	--	2/18/2012 5:00	0.0085	--
2/18/2012 6:00	0.0089	--	2/18/2012 6:00	SOURCE DOWN	--	2/18/2012 6:00	0.0090	--
2/18/2012 7:00	0.0088	--	2/18/2012 7:00	SOURCE DOWN	--	2/18/2012 7:00	0.0063	--
2/18/2012 8:00	0.0087	--	2/18/2012 8:00	SOURCE DOWN	--	2/18/2012 8:00	0.0088	--
2/18/2012 9:00	0.0087	--	2/18/2012 9:00	SOURCE DOWN	--	2/18/2012 9:00	0.0089	--
2/18/2012 10:00	0.0088	--	2/18/2012 10:00	SOURCE DOWN	--	2/18/2012 10:00	0.0071	--
2/18/2012 11:00	0.0086	--	2/18/2012 11:00	SOURCE DOWN	--	2/18/2012 11:00	0.0071	--
2/18/2012 12:00	0.0087	--	2/18/2012 12:00	SOURCE DOWN	--	2/18/2012 12:00	0.0075	--
2/18/2012 13:00	0.0086	--	2/18/2012 13:00	SOURCE DOWN	--	2/18/2012 13:00	0.0074	--
2/18/2012 14:00	0.0085	--	2/18/2012 14:00	SOURCE DOWN	--	2/18/2012 14:00	0.0069	--
2/18/2012 15:00	0.0087	--	2/18/2012 15:00	SOURCE DOWN	--	2/18/2012 15:00	0.0076	--
2/18/2012 16:00	0.0084	--	2/18/2012 16:00	SOURCE DOWN	--	2/18/2012 16:00	0.0070	--
2/18/2012 17:00	0.0087	--	2/18/2012 17:00	SOURCE DOWN	--	2/18/2012 17:00	0.0072	--
2/18/2012 18:00	0.0087	--	2/18/2012 18:00	SOURCE DOWN	--	2/18/2012 18:00	0.0075	--
2/18/2012 19:00	0.0085	--	2/18/2012 19:00	SOURCE DOWN	--	2/18/2012 19:00	0.0077	--

Package Boiler No. 1 EPN 81BF01			Package Boiler No. 2 EPN 50BF02			Package Boiler No. 3 EPN 50BF03		
Date	NO_X (lb/MMBtu)	NO_X (lb/MMBtu) 30-day Rolling Average	Date	NO_X (lb/MMBtu)	NO_X (lb/MMBtu) 30-day Rolling Average	Date	NO_X (lb/MMBtu)	NO_X (lb/MMBtu) 30-day Rolling Average
2/18/2012 20:00	0.0086	--	2/18/2012 20:00	SOURCE DOWN	--	2/18/2012 20:00	0.0083	--
2/18/2012 21:00	0.0088	--	2/18/2012 21:00	SOURCE DOWN	--	2/18/2012 21:00	0.0070	--
2/18/2012 22:00	0.0089	--	2/18/2012 22:00	SOURCE DOWN	--	2/18/2012 22:00	0.0075	--
2/18/2012 23:00	0.0087	0.0089	2/18/2012 23:00	SOURCE DOWN	0.0000	2/18/2012 23:00	0.0070	0.0075
2/19/2012 0:00	0.0086	--	2/19/2012 0:00	SOURCE DOWN	--	2/19/2012 0:00	0.0067	--
2/19/2012 1:00	0.0087	--	2/19/2012 1:00	SOURCE DOWN	--	2/19/2012 1:00	0.0071	--
2/19/2012 2:00	0.0085	--	2/19/2012 2:00	SOURCE DOWN	--	2/19/2012 2:00	0.0072	--
2/19/2012 3:00	0.0086	--	2/19/2012 3:00	SOURCE DOWN	--	2/19/2012 3:00	0.0073	--
2/19/2012 4:00	0.0085	--	2/19/2012 4:00	SOURCE DOWN	--	2/19/2012 4:00	0.0072	--
2/19/2012 5:00	0.0085	--	2/19/2012 5:00	SOURCE DOWN	--	2/19/2012 5:00	0.0071	--
2/19/2012 6:00	0.0089	--	2/19/2012 6:00	SOURCE DOWN	--	2/19/2012 6:00	0.0077	--
2/19/2012 7:00	0.0088	--	2/19/2012 7:00	SOURCE DOWN	--	2/19/2012 7:00	0.0075	--
2/19/2012 8:00	0.0087	--	2/19/2012 8:00	SOURCE DOWN	--	2/19/2012 8:00	0.0075	--
2/19/2012 9:00	0.0087	--	2/19/2012 9:00	SOURCE DOWN	--	2/19/2012 9:00	0.0075	--
2/19/2012 10:00	0.0086	--	2/19/2012 10:00	SOURCE DOWN	--	2/19/2012 10:00	0.0071	--
2/19/2012 11:00	0.0087	--	2/19/2012 11:00	SOURCE DOWN	--	2/19/2012 11:00	0.0076	--
2/19/2012 12:00	0.0087	--	2/19/2012 12:00	SOURCE DOWN	--	2/19/2012 12:00	0.0074	--
2/19/2012 13:00	0.0087	--	2/19/2012 13:00	SOURCE DOWN	--	2/19/2012 13:00	0.0071	--
2/19/2012 14:00	0.0087	--	2/19/2012 14:00	SOURCE DOWN	--	2/19/2012 14:00	0.0071	--
2/19/2012 15:00	0.0088	--	2/19/2012 15:00	SOURCE DOWN	--	2/19/2012 15:00	0.0072	--
2/19/2012 16:00	0.0087	--	2/19/2012 16:00	SOURCE DOWN	--	2/19/2012 16:00	0.0082	--
2/19/2012 17:00	0.0087	--	2/19/2012 17:00	SOURCE DOWN	--	2/19/2012 17:00	0.0069	--
2/19/2012 18:00	0.0083	--	2/19/2012 18:00	SOURCE DOWN	--	2/19/2012 18:00	0.0073	--
2/19/2012 19:00	0.0083	--	2/19/2012 19:00	SOURCE DOWN	--	2/19/2012 19:00	0.0078	--
2/19/2012 20:00	0.0085	--	2/19/2012 20:00	SOURCE DOWN	--	2/19/2012 20:00	0.0084	--
2/19/2012 21:00	0.0085	--	2/19/2012 21:00	SOURCE DOWN	--	2/19/2012 21:00	0.0077	--
2/19/2012 22:00	0.0086	--	2/19/2012 22:00	SOURCE DOWN	--	2/19/2012 22:00	0.0073	--
2/19/2012 23:00	0.0084	0.0089	2/19/2012 23:00	SOURCE DOWN	0.0000	2/19/2012 23:00	0.0069	0.0075
2/20/2012 0:00	0.0086	--	2/20/2012 0:00	SOURCE DOWN	--	2/20/2012 0:00	0.0075	--
2/20/2012 1:00	0.0086	--	2/20/2012 1:00	SOURCE DOWN	--	2/20/2012 1:00	0.0073	--
2/20/2012 2:00	0.0086	--	2/20/2012 2:00	SOURCE DOWN	--	2/20/2012 2:00	0.0074	--
2/20/2012 3:00	0.0087	--	2/20/2012 3:00	SOURCE DOWN	--	2/20/2012 3:00	0.0076	--
2/20/2012 4:00	0.0086	--	2/20/2012 4:00	SOURCE DOWN	--	2/20/2012 4:00	0.0076	--
2/20/2012 5:00	0.0086	--	2/20/2012 5:00	SOURCE DOWN	--	2/20/2012 5:00	0.0075	--
2/20/2012 6:00	0.0088	--	2/20/2012 6:00	SOURCE DOWN	--	2/20/2012 6:00	0.0089	--
2/20/2012 7:00	0.0085	--	2/20/2012 7:00	SOURCE DOWN	--	2/20/2012 7:00	0.0080	--
2/20/2012 8:00	0.0086	--	2/20/2012 8:00	SOURCE DOWN	--	2/20/2012 8:00	0.0080	--
2/20/2012 9:00	0.0087	--	2/20/2012 9:00	SOURCE DOWN	--	2/20/2012 9:00	0.0083	--
2/20/2012 10:00	0.0087	--	2/20/2012 10:00	SOURCE DOWN	--	2/20/2012 10:00	0.0086	--
2/20/2012 11:00	0.0087	--	2/20/2012 11:00	SOURCE DOWN	--	2/20/2012 11:00	0.0072	--
2/20/2012 12:00	0.0086	--	2/20/2012 12:00	SOURCE DOWN	--	2/20/2012 12:00	0.0075	--

Package Boiler No. 1 EPN 81BF01			Package Boiler No. 2 EPN 50BF02			Package Boiler No. 3 EPN 50BF03		
Date	NO_X (lb/MMBtu)	NO_X (lb/MMBtu) 30-day Rolling Average	Date	NO_X (lb/MMBtu)	NO_X (lb/MMBtu) 30-day Rolling Average	Date	NO_X (lb/MMBtu)	NO_X (lb/MMBtu) 30-day Rolling Average
2/20/2012 13:00	0.0086	--	2/20/2012 13:00	SOURCE DOWN	--	2/20/2012 13:00	0.0084	--
2/20/2012 14:00	0.0085	--	2/20/2012 14:00	SOURCE DOWN	--	2/20/2012 14:00	0.0071	--
2/20/2012 15:00	0.0085	--	2/20/2012 15:00	SOURCE DOWN	--	2/20/2012 15:00	0.0049	--
2/20/2012 16:00	0.0087	--	2/20/2012 16:00	SOURCE DOWN	--	2/20/2012 16:00	0.0057	--
2/20/2012 17:00	0.0087	--	2/20/2012 17:00	SOURCE DOWN	--	2/20/2012 17:00	0.0074	--
2/20/2012 18:00	0.0085	--	2/20/2012 18:00	SOURCE DOWN	--	2/20/2012 18:00	0.0070	--
2/20/2012 19:00	0.0084	--	2/20/2012 19:00	SOURCE DOWN	--	2/20/2012 19:00	0.0074	--
2/20/2012 20:00	0.0085	--	2/20/2012 20:00	SOURCE DOWN	--	2/20/2012 20:00	0.0070	--
2/20/2012 21:00	0.0085	--	2/20/2012 21:00	SOURCE DOWN	--	2/20/2012 21:00	0.0071	--
2/20/2012 22:00	0.0085	--	2/20/2012 22:00	SOURCE DOWN	--	2/20/2012 22:00	0.0073	--
2/20/2012 23:00	0.0085	0.0088	2/20/2012 23:00	SOURCE DOWN	0.0000	2/20/2012 23:00	0.0074	0.0075
2/21/2012 0:00	0.0085	--	2/21/2012 0:00	SOURCE DOWN	--	2/21/2012 0:00	0.0071	--
2/21/2012 1:00	0.0086	--	2/21/2012 1:00	SOURCE DOWN	--	2/21/2012 1:00	0.0074	--
2/21/2012 2:00	0.0085	--	2/21/2012 2:00	SOURCE DOWN	--	2/21/2012 2:00	0.0073	--
2/21/2012 3:00	0.0086	--	2/21/2012 3:00	SOURCE DOWN	--	2/21/2012 3:00	0.0071	--
2/21/2012 4:00	0.0086	--	2/21/2012 4:00	SOURCE DOWN	--	2/21/2012 4:00	0.0075	--
2/21/2012 5:00	0.0086	--	2/21/2012 5:00	SOURCE DOWN	--	2/21/2012 5:00	0.0074	--
2/21/2012 6:00	0.0089	--	2/21/2012 6:00	SOURCE DOWN	--	2/21/2012 6:00	0.0078	--
2/21/2012 7:00	0.0085	--	2/21/2012 7:00	SOURCE DOWN	--	2/21/2012 7:00	0.0077	--
2/21/2012 8:00	0.0087	--	2/21/2012 8:00	SOURCE DOWN	--	2/21/2012 8:00	0.0070	--
2/21/2012 9:00	0.0087	--	2/21/2012 9:00	SOURCE DOWN	--	2/21/2012 9:00	0.0073	--
2/21/2012 10:00	0.0086	--	2/21/2012 10:00	SOURCE DOWN	--	2/21/2012 10:00	0.0074	--
2/21/2012 11:00	0.0088	--	2/21/2012 11:00	SOURCE DOWN	--	2/21/2012 11:00	0.0069	--
2/21/2012 12:00	0.0088	--	2/21/2012 12:00	SOURCE DOWN	--	2/21/2012 12:00	0.0066	--
2/21/2012 13:00	0.0087	--	2/21/2012 13:00	SOURCE DOWN	--	2/21/2012 13:00	0.0075	--
2/21/2012 14:00	0.0092	--	2/21/2012 14:00	SOURCE DOWN	--	2/21/2012 14:00	0.0073	--
2/21/2012 15:00	0.0093	--	2/21/2012 15:00	SOURCE DOWN	--	2/21/2012 15:00	0.0069	--
2/21/2012 16:00	0.0090	--	2/21/2012 16:00	SOURCE DOWN	--	2/21/2012 16:00	0.0072	--
2/21/2012 17:00	0.0086	--	2/21/2012 17:00	SOURCE DOWN	--	2/21/2012 17:00	0.0071	--
2/21/2012 18:00	0.0087	--	2/21/2012 18:00	SOURCE DOWN	--	2/21/2012 18:00	0.0068	--
2/21/2012 19:00	0.0087	--	2/21/2012 19:00	SOURCE DOWN	--	2/21/2012 19:00	0.0071	--
2/21/2012 20:00	0.0089	--	2/21/2012 20:00	SOURCE DOWN	--	2/21/2012 20:00	0.0069	--
2/21/2012 21:00	0.0088	--	2/21/2012 21:00	SOURCE DOWN	--	2/21/2012 21:00	0.0072	--
2/21/2012 22:00	0.0089	--	2/21/2012 22:00	SOURCE DOWN	--	2/21/2012 22:00	0.0071	--
2/21/2012 23:00	0.0089	0.0088	2/21/2012 23:00	SOURCE DOWN	0.0000	2/21/2012 23:00	0.0064	0.0075
2/22/2012 0:00	0.0089	--	2/22/2012 0:00	SOURCE DOWN	--	2/22/2012 0:00	0.0072	--
2/22/2012 1:00	0.0089	--	2/22/2012 1:00	SOURCE DOWN	--	2/22/2012 1:00	0.0073	--
2/22/2012 2:00	0.0088	--	2/22/2012 2:00	SOURCE DOWN	--	2/22/2012 2:00	0.0069	--
2/22/2012 3:00	0.0089	--	2/22/2012 3:00	SOURCE DOWN	--	2/22/2012 3:00	0.0071	--
2/22/2012 4:00	0.0088	--	2/22/2012 4:00	SOURCE DOWN	--	2/22/2012 4:00	0.0074	--
2/22/2012 5:00	0.0088	--	2/22/2012 5:00	SOURCE DOWN	--	2/22/2012 5:00	0.0071	--

Package Boiler No. 1 EPN 81BF01			Package Boiler No. 2 EPN 50BF02			Package Boiler No. 3 EPN 50BF03		
Date	NO_X (lb/MMBtu)	NO_X (lb/MMBtu) 30-day Rolling Average	Date	NO_X (lb/MMBtu)	NO_X (lb/MMBtu) 30-day Rolling Average	Date	NO_X (lb/MMBtu)	NO_X (lb/MMBtu) 30-day Rolling Average
2/22/2012 6:00	0.0093	--	2/22/2012 6:00	SOURCE DOWN	--	2/22/2012 6:00	0.0071	--
2/22/2012 7:00	0.0091	--	2/22/2012 7:00	SOURCE DOWN	--	2/22/2012 7:00	0.0071	--
2/22/2012 8:00	0.0089	--	2/22/2012 8:00	SOURCE DOWN	--	2/22/2012 8:00	0.0071	--
2/22/2012 9:00	0.0089	--	2/22/2012 9:00	SOURCE DOWN	--	2/22/2012 9:00	0.0072	--
2/22/2012 10:00	0.0091	--	2/22/2012 10:00	SOURCE DOWN	--	2/22/2012 10:00	0.0072	--
2/22/2012 11:00	0.0091	--	2/22/2012 11:00	SOURCE DOWN	--	2/22/2012 11:00	0.0069	--
2/22/2012 12:00	0.0092	--	2/22/2012 12:00	SOURCE DOWN	--	2/22/2012 12:00	0.0073	--
2/22/2012 13:00	0.0092	--	2/22/2012 13:00	SOURCE DOWN	--	2/22/2012 13:00	0.0074	--
2/22/2012 14:00	0.0092	--	2/22/2012 14:00	SOURCE DOWN	--	2/22/2012 14:00	0.0074	--
2/22/2012 15:00	0.0090	--	2/22/2012 15:00	SOURCE DOWN	--	2/22/2012 15:00	0.0073	--
2/22/2012 16:00	0.0093	--	2/22/2012 16:00	SOURCE DOWN	--	2/22/2012 16:00	0.0071	--
2/22/2012 17:00	0.0090	--	2/22/2012 17:00	SOURCE DOWN	--	2/22/2012 17:00	0.0067	--
2/22/2012 18:00	0.0086	--	2/22/2012 18:00	SOURCE DOWN	--	2/22/2012 18:00	0.0066	--
2/22/2012 19:00	0.0087	--	2/22/2012 19:00	SOURCE DOWN	--	2/22/2012 19:00	0.0070	--
2/22/2012 20:00	0.0087	--	2/22/2012 20:00	SOURCE DOWN	--	2/22/2012 20:00	0.0071	--
2/22/2012 21:00	0.0088	--	2/22/2012 21:00	SOURCE DOWN	--	2/22/2012 21:00	0.0073	--
2/22/2012 22:00	0.0089	--	2/22/2012 22:00	SOURCE DOWN	--	2/22/2012 22:00	0.0083	--
2/22/2012 23:00	0.0087	0.0088	2/22/2012 23:00	SOURCE DOWN	0.0000	2/22/2012 23:00	0.0066	0.0075
2/23/2012 0:00	0.0089	--	2/23/2012 0:00	SOURCE DOWN	--	2/23/2012 0:00	0.0070	--
2/23/2012 1:00	0.0090	--	2/23/2012 1:00	SOURCE DOWN	--	2/23/2012 1:00	0.0073	--
2/23/2012 2:00	0.0089	--	2/23/2012 2:00	SOURCE DOWN	--	2/23/2012 2:00	0.0075	--
2/23/2012 3:00	0.0089	--	2/23/2012 3:00	SOURCE DOWN	--	2/23/2012 3:00	0.0072	--
2/23/2012 4:00	0.0089	--	2/23/2012 4:00	SOURCE DOWN	--	2/23/2012 4:00	0.0070	--
2/23/2012 5:00	0.0089	--	2/23/2012 5:00	SOURCE DOWN	--	2/23/2012 5:00	0.0070	--
2/23/2012 6:00	0.0092	--	2/23/2012 6:00	SOURCE DOWN	--	2/23/2012 6:00	0.0070	--
2/23/2012 7:00	0.0092	--	2/23/2012 7:00	SOURCE DOWN	--	2/23/2012 7:00	0.0091	--
2/23/2012 8:00	0.0098	--	2/23/2012 8:00	SOURCE DOWN	--	2/23/2012 8:00	0.0047	--
2/23/2012 9:00	0.0090	--	2/23/2012 9:00	SOURCE DOWN	--	2/23/2012 9:00	0.0067	--
2/23/2012 10:00	0.0089	--	2/23/2012 10:00	SOURCE DOWN	--	2/23/2012 10:00	0.0073	--
2/23/2012 11:00	0.0088	--	2/23/2012 11:00	SOURCE DOWN	--	2/23/2012 11:00	0.0073	--
2/23/2012 12:00	0.0093	--	2/23/2012 12:00	SOURCE DOWN	--	2/23/2012 12:00	0.0079	--
2/23/2012 13:00	0.0085	--	2/23/2012 13:00	SOURCE DOWN	--	2/23/2012 13:00	0.0071	--
2/23/2012 14:00	0.0087	--	2/23/2012 14:00	SOURCE DOWN	--	2/23/2012 14:00	0.0076	--
2/23/2012 15:00	0.0087	--	2/23/2012 15:00	SOURCE DOWN	--	2/23/2012 15:00	0.0073	--
2/23/2012 16:00	0.0089	--	2/23/2012 16:00	SOURCE DOWN	--	2/23/2012 16:00	0.0076	--
2/23/2012 17:00	0.0087	--	2/23/2012 17:00	SOURCE DOWN	--	2/23/2012 17:00	0.0072	--
2/23/2012 18:00	0.0087	--	2/23/2012 18:00	SOURCE DOWN	--	2/23/2012 18:00	0.0074	--
2/23/2012 19:00	0.0087	--	2/23/2012 19:00	SOURCE DOWN	--	2/23/2012 19:00	0.0074	--
2/23/2012 20:00	0.0087	--	2/23/2012 20:00	SOURCE DOWN	--	2/23/2012 20:00	0.0072	--
2/23/2012 21:00	0.0089	--	2/23/2012 21:00	SOURCE DOWN	--	2/23/2012 21:00	0.0073	--
2/23/2012 22:00	0.0089	--	2/23/2012 22:00	SOURCE DOWN	--	2/23/2012 22:00	0.0074	--

Package Boiler No. 1 EPN 81BF01			Package Boiler No. 2 EPN 50BF02			Package Boiler No. 3 EPN 50BF03		
Date	NO_X (lb/MMBtu)	NO_X (lb/MMBtu) 30-day Rolling Average	Date	NO_X (lb/MMBtu)	NO_X (lb/MMBtu) 30-day Rolling Average	Date	NO_X (lb/MMBtu)	NO_X (lb/MMBtu) 30-day Rolling Average
2/23/2012 23:00	0.0087	0.0089	2/23/2012 23:00	SOURCE DOWN	0.0000	2/23/2012 23:00	0.0071	0.0075
2/24/2012 0:00	0.0086	--	2/24/2012 0:00	SOURCE DOWN	--	2/24/2012 0:00	0.0074	--
2/24/2012 1:00	0.0088	--	2/24/2012 1:00	SOURCE DOWN	--	2/24/2012 1:00	0.0074	--
2/24/2012 2:00	0.0087	--	2/24/2012 2:00	SOURCE DOWN	--	2/24/2012 2:00	0.0073	--
2/24/2012 3:00	0.0094	--	2/24/2012 3:00	SOURCE DOWN	--	2/24/2012 3:00	0.0085	--
2/24/2012 4:00	0.0094	--	2/24/2012 4:00	SOURCE DOWN	--	2/24/2012 4:00	0.0081	--
2/24/2012 5:00	0.0090	--	2/24/2012 5:00	SOURCE DOWN	--	2/24/2012 5:00	0.0075	--
2/24/2012 6:00	0.0095	--	2/24/2012 6:00	SOURCE DOWN	--	2/24/2012 6:00	0.0078	--
2/24/2012 7:00	0.0087	--	2/24/2012 7:00	SOURCE DOWN	--	2/24/2012 7:00	0.0074	--
2/24/2012 8:00	0.0086	--	2/24/2012 8:00	SOURCE DOWN	--	2/24/2012 8:00	0.0067	--
2/24/2012 9:00	0.0086	--	2/24/2012 9:00	SOURCE DOWN	--	2/24/2012 9:00	0.0072	--
2/24/2012 10:00	0.0086	--	2/24/2012 10:00	SOURCE DOWN	--	2/24/2012 10:00	0.0070	--
2/24/2012 11:00	0.0087	--	2/24/2012 11:00	SOURCE DOWN	--	2/24/2012 11:00	0.0076	--
2/24/2012 12:00	0.0083	--	2/24/2012 12:00	SOURCE DOWN	--	2/24/2012 12:00	0.0074	--
2/24/2012 13:00	0.0086	--	2/24/2012 13:00	SOURCE DOWN	--	2/24/2012 13:00	0.0072	--
2/24/2012 14:00	0.0086	--	2/24/2012 14:00	SOURCE DOWN	--	2/24/2012 14:00	0.0073	--
2/24/2012 15:00	0.0087	--	2/24/2012 15:00	0.0716	--	2/24/2012 15:00	0.0073	--
2/24/2012 16:00	0.0086	--	2/24/2012 16:00	0.0635	--	2/24/2012 16:00	0.0076	--
2/24/2012 17:00	0.0084	--	2/24/2012 17:00	0.0651	--	2/24/2012 17:00	0.0073	--
2/24/2012 18:00	0.0085	--	2/24/2012 18:00	0.0671	--	2/24/2012 18:00	0.0072	--
2/24/2012 19:00	0.0085	--	2/24/2012 19:00	0.0623	--	2/24/2012 19:00	0.0070	--
2/24/2012 20:00	0.0084	--	2/24/2012 20:00	0.0644	--	2/24/2012 20:00	0.0068	--
2/24/2012 21:00	0.0086	--	2/24/2012 21:00	0.0565	--	2/24/2012 21:00	0.0074	--
2/24/2012 22:00	0.0084	--	2/24/2012 22:00	0.0468	--	2/24/2012 22:00	0.0071	--
2/24/2012 23:00	0.0086	0.0088	2/24/2012 23:00	0.0465	0.0008	2/24/2012 23:00	0.0071	0.0075
2/25/2012 0:00	0.0085	--	2/25/2012 0:00	0.0525	--	2/25/2012 0:00	0.0074	--
2/25/2012 1:00	0.0087	--	2/25/2012 1:00	0.0593	--	2/25/2012 1:00	0.0072	--
2/25/2012 2:00	0.0086	--	2/25/2012 2:00	0.0661	--	2/25/2012 2:00	0.0069	--
2/25/2012 3:00	0.0086	--	2/25/2012 3:00	0.0692	--	2/25/2012 3:00	0.0072	--
2/25/2012 4:00	0.0086	--	2/25/2012 4:00	0.0733	--	2/25/2012 4:00	0.0073	--
2/25/2012 5:00	0.0086	--	2/25/2012 5:00	0.0757	--	2/25/2012 5:00	0.0077	--
2/25/2012 6:00	0.0089	--	2/25/2012 6:00	0.0736	--	2/25/2012 6:00	0.0072	--
2/25/2012 7:00	0.0082	--	2/25/2012 7:00	0.0715	--	2/25/2012 7:00	0.0070	--
2/25/2012 8:00	0.0085	--	2/25/2012 8:00	0.0738	--	2/25/2012 8:00	0.0073	--
2/25/2012 9:00	0.0084	--	2/25/2012 9:00	0.0731	--	2/25/2012 9:00	0.0077	--
2/25/2012 10:00	0.0082	--	2/25/2012 10:00	0.0742	--	2/25/2012 10:00	0.0088	--
2/25/2012 11:00	0.0084	--	2/25/2012 11:00	0.0738	--	2/25/2012 11:00	0.0092	--
2/25/2012 12:00	0.0086	--	2/25/2012 12:00	0.0689	--	2/25/2012 12:00	0.0074	--
2/25/2012 13:00	0.0087	--	2/25/2012 13:00	0.0684	--	2/25/2012 13:00	0.0067	--
2/25/2012 14:00	0.0086	--	2/25/2012 14:00	SOURCE DOWN	--	2/25/2012 14:00	0.0073	--
2/25/2012 15:00	0.0084	--	2/25/2012 15:00	SOURCE DOWN	--	2/25/2012 15:00	0.0073	--

Package Boiler No. 1 EPN 81BF01			Package Boiler No. 2 EPN 50BF02			Package Boiler No. 3 EPN 50BF03		
Date	NO_X (lb/MMBtu)	NO_X (lb/MMBtu) 30-day Rolling Average	Date	NO_X (lb/MMBtu)	NO_X (lb/MMBtu) 30-day Rolling Average	Date	NO_X (lb/MMBtu)	NO_X (lb/MMBtu) 30-day Rolling Average
2/25/2012 16:00	0.0083	--	2/25/2012 16:00	SOURCE DOWN	--	2/25/2012 16:00	0.0068	--
2/25/2012 17:00	0.0083	--	2/25/2012 17:00	SOURCE DOWN	--	2/25/2012 17:00	0.0072	--
2/25/2012 18:00	0.0086	--	2/25/2012 18:00	SOURCE DOWN	--	2/25/2012 18:00	0.0074	--
2/25/2012 19:00	0.0086	--	2/25/2012 19:00	SOURCE DOWN	--	2/25/2012 19:00	0.0071	--
2/25/2012 20:00	0.0087	--	2/25/2012 20:00	SOURCE DOWN	--	2/25/2012 20:00	0.0071	--
2/25/2012 21:00	0.0090	--	2/25/2012 21:00	SOURCE DOWN	--	2/25/2012 21:00	0.0068	--
2/25/2012 22:00	0.0084	--	2/25/2012 22:00	SOURCE DOWN	--	2/25/2012 22:00	0.0075	--
2/25/2012 23:00	0.0081	0.0088	2/25/2012 23:00	SOURCE DOWN	0.0021	2/25/2012 23:00	0.0071	0.0075
2/26/2012 0:00	0.0086	--	2/26/2012 0:00	SOURCE DOWN	--	2/26/2012 0:00	0.0070	--
2/26/2012 1:00	0.0088	--	2/26/2012 1:00	SOURCE DOWN	--	2/26/2012 1:00	0.0069	--
2/26/2012 2:00	0.0084	--	2/26/2012 2:00	SOURCE DOWN	--	2/26/2012 2:00	0.0072	--
2/26/2012 3:00	0.0086	--	2/26/2012 3:00	SOURCE DOWN	--	2/26/2012 3:00	0.0072	--
2/26/2012 4:00	0.0085	--	2/26/2012 4:00	SOURCE DOWN	--	2/26/2012 4:00	0.0072	--
2/26/2012 5:00	0.0084	--	2/26/2012 5:00	SOURCE DOWN	--	2/26/2012 5:00	0.0075	--
2/26/2012 6:00	0.0088	--	2/26/2012 6:00	SOURCE DOWN	--	2/26/2012 6:00	0.0082	--
2/26/2012 7:00	0.0089	--	2/26/2012 7:00	SOURCE DOWN	--	2/26/2012 7:00	0.0077	--
2/26/2012 8:00	0.0086	--	2/26/2012 8:00	SOURCE DOWN	--	2/26/2012 8:00	0.0069	--
2/26/2012 9:00	0.0086	--	2/26/2012 9:00	SOURCE DOWN	--	2/26/2012 9:00	0.0074	--
2/26/2012 10:00	0.0086	--	2/26/2012 10:00	SOURCE DOWN	--	2/26/2012 10:00	0.0071	--
2/26/2012 11:00	0.0084	--	2/26/2012 11:00	0.0020	--	2/26/2012 11:00	0.0074	--
2/26/2012 12:00	0.0085	--	2/26/2012 12:00	SOURCE DOWN	--	2/26/2012 12:00	0.0073	--
2/26/2012 13:00	0.0085	--	2/26/2012 13:00	SOURCE DOWN	--	2/26/2012 13:00	0.0073	--
2/26/2012 14:00	0.0085	--	2/26/2012 14:00	SOURCE DOWN	--	2/26/2012 14:00	0.0071	--
2/26/2012 15:00	0.0085	--	2/26/2012 15:00	SOURCE DOWN	--	2/26/2012 15:00	0.0073	--
2/26/2012 16:00	0.0085	--	2/26/2012 16:00	0.0011	--	2/26/2012 16:00	0.0076	--
2/26/2012 17:00	0.0085	--	2/26/2012 17:00	SOURCE DOWN	--	2/26/2012 17:00	0.0071	--
2/26/2012 18:00	0.0085	--	2/26/2012 18:00	SOURCE DOWN	--	2/26/2012 18:00	0.0072	--
2/26/2012 19:00	0.0085	--	2/26/2012 19:00	SOURCE DOWN	--	2/26/2012 19:00	0.0071	--
2/26/2012 20:00	0.0085	--	2/26/2012 20:00	SOURCE DOWN	--	2/26/2012 20:00	0.0073	--
2/26/2012 21:00	0.0085	--	2/26/2012 21:00	SOURCE DOWN	--	2/26/2012 21:00	0.0074	--
2/26/2012 22:00	0.0085	--	2/26/2012 22:00	SOURCE DOWN	--	2/26/2012 22:00	0.0075	--
2/26/2012 23:00	0.0087	0.0088	2/26/2012 23:00	SOURCE DOWN	0.0021	2/26/2012 23:00	0.0075	0.0074
2/27/2012 0:00	0.0086	--	2/27/2012 0:00	SOURCE DOWN	--	2/27/2012 0:00	0.0073	--
2/27/2012 1:00	0.0086	--	2/27/2012 1:00	SOURCE DOWN	--	2/27/2012 1:00	0.0077	--
2/27/2012 2:00	0.0086	--	2/27/2012 2:00	SOURCE DOWN	--	2/27/2012 2:00	0.0075	--
2/27/2012 3:00	0.0086	--	2/27/2012 3:00	SOURCE DOWN	--	2/27/2012 3:00	0.0074	--
2/27/2012 4:00	0.0086	--	2/27/2012 4:00	SOURCE DOWN	--	2/27/2012 4:00	0.0075	--
2/27/2012 5:00	0.0086	--	2/27/2012 5:00	SOURCE DOWN	--	2/27/2012 5:00	0.0074	--
2/27/2012 6:00	0.0089	--	2/27/2012 6:00	SOURCE DOWN	--	2/27/2012 6:00	0.0074	--
2/27/2012 7:00	0.0085	--	2/27/2012 7:00	SOURCE DOWN	--	2/27/2012 7:00	0.0075	--
2/27/2012 8:00	0.0085	--	2/27/2012 8:00	SOURCE DOWN	--	2/27/2012 8:00	0.0075	--

Package Boiler No. 1 EPN 81BF01			Package Boiler No. 2 EPN 50BF02			Package Boiler No. 3 EPN 50BF03		
Date	NO_X (lb/MMBtu)	NO_X (lb/MMBtu) 30-day Rolling Average	Date	NO_X (lb/MMBtu)	NO_X (lb/MMBtu) 30-day Rolling Average	Date	NO_X (lb/MMBtu)	NO_X (lb/MMBtu) 30-day Rolling Average
2/27/2012 9:00	0.0086	--	2/27/2012 9:00	SOURCE DOWN	--	2/27/2012 9:00	0.0075	--
2/27/2012 10:00	0.0086	--	2/27/2012 10:00	SOURCE DOWN	--	2/27/2012 10:00	0.0069	--
2/27/2012 11:00	0.0087	--	2/27/2012 11:00	SOURCE DOWN	--	2/27/2012 11:00	0.0074	--
2/27/2012 12:00	0.0087	--	2/27/2012 12:00	SOURCE DOWN	--	2/27/2012 12:00	0.0081	--
2/27/2012 13:00	0.0086	--	2/27/2012 13:00	SOURCE DOWN	--	2/27/2012 13:00	0.0076	--
2/27/2012 14:00	0.0086	--	2/27/2012 14:00	SOURCE DOWN	--	2/27/2012 14:00	0.0074	--
2/27/2012 15:00	0.0085	--	2/27/2012 15:00	SOURCE DOWN	--	2/27/2012 15:00	0.0074	--
2/27/2012 16:00	0.0087	--	2/27/2012 16:00	SOURCE DOWN	--	2/27/2012 16:00	0.0075	--
2/27/2012 17:00	0.0085	--	2/27/2012 17:00	SOURCE DOWN	--	2/27/2012 17:00	0.0073	--
2/27/2012 18:00	0.0085	--	2/27/2012 18:00	SOURCE DOWN	--	2/27/2012 18:00	0.0076	--
2/27/2012 19:00	0.0087	--	2/27/2012 19:00	SOURCE DOWN	--	2/27/2012 19:00	0.0077	--
2/27/2012 20:00	0.0086	--	2/27/2012 20:00	SOURCE DOWN	--	2/27/2012 20:00	0.0066	--
2/27/2012 21:00	0.0086	--	2/27/2012 21:00	SOURCE DOWN	--	2/27/2012 21:00	0.0070	--
2/27/2012 22:00	0.0085	--	2/27/2012 22:00	SOURCE DOWN	--	2/27/2012 22:00	0.0072	--
2/27/2012 23:00	0.0086	0.0088	2/27/2012 23:00	SOURCE DOWN	0.0021	2/27/2012 23:00	0.0070	0.0074
2/28/2012 0:00	0.0086	--	2/28/2012 0:00	SOURCE DOWN	--	2/28/2012 0:00	0.0070	--
2/28/2012 1:00	0.0086	--	2/28/2012 1:00	SOURCE DOWN	--	2/28/2012 1:00	0.0070	--
2/28/2012 2:00	0.0086	--	2/28/2012 2:00	SOURCE DOWN	--	2/28/2012 2:00	0.0075	--
2/28/2012 3:00	0.0086	--	2/28/2012 3:00	SOURCE DOWN	--	2/28/2012 3:00	0.0073	--
2/28/2012 4:00	0.0086	--	2/28/2012 4:00	SOURCE DOWN	--	2/28/2012 4:00	0.0072	--
2/28/2012 5:00	0.0085	--	2/28/2012 5:00	SOURCE DOWN	--	2/28/2012 5:00	0.0074	--
2/28/2012 6:00	0.0089	--	2/28/2012 6:00	SOURCE DOWN	--	2/28/2012 6:00	0.0075	--
2/28/2012 7:00	0.0085	--	2/28/2012 7:00	0.0595	--	2/28/2012 7:00	0.0072	--
2/28/2012 8:00	0.0086	--	2/28/2012 8:00	0.0611	--	2/28/2012 8:00	0.0072	--
2/28/2012 9:00	0.0086	--	2/28/2012 9:00	0.0614	--	2/28/2012 9:00	0.0072	--
2/28/2012 10:00	0.0085	--	2/28/2012 10:00	0.0633	--	2/28/2012 10:00	0.0073	--
2/28/2012 11:00	0.0085	--	2/28/2012 11:00	0.0587	--	2/28/2012 11:00	0.0073	--
2/28/2012 12:00	0.0086	--	2/28/2012 12:00	0.0586	--	2/28/2012 12:00	0.0074	--
2/28/2012 13:00	0.0087	--	2/28/2012 13:00	0.0599	--	2/28/2012 13:00	0.0076	--
2/28/2012 14:00	0.0087	--	2/28/2012 14:00	0.0614	--	2/28/2012 14:00	0.0077	--
2/28/2012 15:00	0.0087	--	2/28/2012 15:00	0.0601	--	2/28/2012 15:00	0.0074	--
2/28/2012 16:00	0.0086	--	2/28/2012 16:00	0.0625	--	2/28/2012 16:00	0.0070	--
2/28/2012 17:00	0.0085	--	2/28/2012 17:00	0.0631	--	2/28/2012 17:00	0.0071	--
2/28/2012 18:00	0.0085	--	2/28/2012 18:00	0.0609	--	2/28/2012 18:00	0.0073	--
2/28/2012 19:00	0.0085	--	2/28/2012 19:00	0.0615	--	2/28/2012 19:00	0.0074	--
2/28/2012 20:00	0.0086	--	2/28/2012 20:00	0.0623	--	2/28/2012 20:00	0.0075	--
2/28/2012 21:00	0.0086	--	2/28/2012 21:00	0.0633	--	2/28/2012 21:00	0.0071	--
2/28/2012 22:00	0.0086	--	2/28/2012 22:00	0.0630	--	2/28/2012 22:00	0.0071	--
2/28/2012 23:00	0.0086	0.0088	2/28/2012 23:00	0.0630	0.0036	2/28/2012 23:00	0.0071	0.0074
2/29/2012 0:00	0.0085	--	2/29/2012 0:00	0.0621	--	2/29/2012 0:00	0.0072	--
2/29/2012 1:00	0.0086	--	2/29/2012 1:00	0.0627	--	2/29/2012 1:00	0.0071	--

Package Boiler No. 1 EPN 81BF01			Package Boiler No. 2 EPN 50BF02			Package Boiler No. 3 EPN 50BF03		
Date	NO_X (lb/MMBtu)	NO_X (lb/MMBtu) 30-day Rolling Average	Date	NO_X (lb/MMBtu)	NO_X (lb/MMBtu) 30-day Rolling Average	Date	NO_X (lb/MMBtu)	NO_X (lb/MMBtu) 30-day Rolling Average
2/29/2012 2:00	0.0085	--	2/29/2012 2:00	0.0602	--	2/29/2012 2:00	0.0072	--
2/29/2012 3:00	0.0086	--	2/29/2012 3:00	0.0610	--	2/29/2012 3:00	0.0072	--
2/29/2012 4:00	0.0087	--	2/29/2012 4:00	0.0609	--	2/29/2012 4:00	0.0074	--
2/29/2012 5:00	0.0086	--	2/29/2012 5:00	0.0625	--	2/29/2012 5:00	0.0072	--
2/29/2012 6:00	0.0088	--	2/29/2012 6:00	SOURCE DOWN	--	2/29/2012 6:00	0.0073	--
2/29/2012 7:00	0.0086	--	2/29/2012 7:00	SOURCE DOWN	--	2/29/2012 7:00	0.0073	--
2/29/2012 8:00	0.0086	--	2/29/2012 8:00	SOURCE DOWN	--	2/29/2012 8:00	0.0074	--
2/29/2012 9:00	0.0088	--	2/29/2012 9:00	SOURCE DOWN	--	2/29/2012 9:00	0.0074	--
2/29/2012 10:00	0.0088	--	2/29/2012 10:00	SOURCE DOWN	--	2/29/2012 10:00	0.0076	--
2/29/2012 11:00	0.0088	--	2/29/2012 11:00	SOURCE DOWN	--	2/29/2012 11:00	0.0075	--
2/29/2012 12:00	0.0088	--	2/29/2012 12:00	SOURCE DOWN	--	2/29/2012 12:00	0.0077	--
2/29/2012 13:00	0.0088	--	2/29/2012 13:00	SOURCE DOWN	--	2/29/2012 13:00	0.0082	--
2/29/2012 14:00	0.0088	--	2/29/2012 14:00	SOURCE DOWN	--	2/29/2012 14:00	0.0074	--
2/29/2012 15:00	0.0086	--	2/29/2012 15:00	SOURCE DOWN	--	2/29/2012 15:00	0.0074	--
2/29/2012 16:00	0.0085	--	2/29/2012 16:00	SOURCE DOWN	--	2/29/2012 16:00	0.0070	--
2/29/2012 17:00	0.0083	--	2/29/2012 17:00	SOURCE DOWN	--	2/29/2012 17:00	0.0070	--
2/29/2012 18:00	0.0085	--	2/29/2012 18:00	SOURCE DOWN	--	2/29/2012 18:00	0.0073	--
2/29/2012 19:00	0.0085	--	2/29/2012 19:00	SOURCE DOWN	--	2/29/2012 19:00	0.0072	--
2/29/2012 20:00	0.0087	--	2/29/2012 20:00	SOURCE DOWN	--	2/29/2012 20:00	0.0077	--
2/29/2012 21:00	0.0085	--	2/29/2012 21:00	SOURCE DOWN	--	2/29/2012 21:00	0.0073	--
2/29/2012 22:00	0.0085	--	2/29/2012 22:00	SOURCE DOWN	--	2/29/2012 22:00	0.0074	--
2/29/2012 23:00	0.0085	0.0087	2/29/2012 23:00	SOURCE DOWN	0.0041	2/29/2012 23:00	0.0071	0.0074
3/1/2012 0:00	0.0086	--	3/1/2012 0:00	SOURCE DOWN	--	3/1/2012 0:00	0.0071	--
3/1/2012 1:00	0.0086	--	3/1/2012 1:00	SOURCE DOWN	--	3/1/2012 1:00	0.0072	--
3/1/2012 2:00	0.0087	--	3/1/2012 2:00	SOURCE DOWN	--	3/1/2012 2:00	0.0072	--
3/1/2012 3:00	0.0089	--	3/1/2012 3:00	SOURCE DOWN	--	3/1/2012 3:00	0.0076	--
3/1/2012 4:00	0.0085	--	3/1/2012 4:00	SOURCE DOWN	--	3/1/2012 4:00	0.0070	--
3/1/2012 5:00	0.0085	--	3/1/2012 5:00	SOURCE DOWN	--	3/1/2012 5:00	0.0075	--
3/1/2012 6:00	0.0090	--	3/1/2012 6:00	SOURCE DOWN	--	3/1/2012 6:00	0.0075	--
3/1/2012 7:00	0.0087	--	3/1/2012 7:00	SOURCE DOWN	--	3/1/2012 7:00	0.0074	--
3/1/2012 8:00	0.0085	--	3/1/2012 8:00	SOURCE DOWN	--	3/1/2012 8:00	0.0075	--
3/1/2012 9:00	0.0089	--	3/1/2012 9:00	SOURCE DOWN	--	3/1/2012 9:00	0.0080	--
3/1/2012 10:00	0.0086	--	3/1/2012 10:00	SOURCE DOWN	--	3/1/2012 10:00	0.0070	--
3/1/2012 11:00	0.0081	--	3/1/2012 11:00	SOURCE DOWN	--	3/1/2012 11:00	0.0078	--
3/1/2012 12:00	0.0084	--	3/1/2012 12:00	SOURCE DOWN	--	3/1/2012 12:00	0.0081	--
3/1/2012 13:00	0.0086	--	3/1/2012 13:00	SOURCE DOWN	--	3/1/2012 13:00	0.0078	--
3/1/2012 14:00	0.0086	--	3/1/2012 14:00	SOURCE DOWN	--	3/1/2012 14:00	0.0075	--
3/1/2012 15:00	0.0087	--	3/1/2012 15:00	SOURCE DOWN	--	3/1/2012 15:00	0.0076	--
3/1/2012 16:00	0.0085	--	3/1/2012 16:00	SOURCE DOWN	--	3/1/2012 16:00	0.0073	--
3/1/2012 17:00	0.0085	--	3/1/2012 17:00	SOURCE DOWN	--	3/1/2012 17:00	0.0075	--
3/1/2012 18:00	0.0084	--	3/1/2012 18:00	SOURCE DOWN	--	3/1/2012 18:00	0.0073	--

Package Boiler No. 1 EPN 81BF01			Package Boiler No. 2 EPN 50BF02			Package Boiler No. 3 EPN 50BF03		
Date	NO_X (lb/MMBtu)	NO_X (lb/MMBtu) 30-day Rolling Average	Date	NO_X (lb/MMBtu)	NO_X (lb/MMBtu) 30-day Rolling Average	Date	NO_X (lb/MMBtu)	NO_X (lb/MMBtu) 30-day Rolling Average
3/1/2012 19:00	0.0084	--	3/1/2012 19:00	SOURCE DOWN	--	3/1/2012 19:00	0.0071	--
3/1/2012 20:00	0.0088	--	3/1/2012 20:00	SOURCE DOWN	--	3/1/2012 20:00	0.0073	--
3/1/2012 21:00	0.0085	--	3/1/2012 21:00	SOURCE DOWN	--	3/1/2012 21:00	0.0077	--
3/1/2012 22:00	0.0084	--	3/1/2012 22:00	SOURCE DOWN	--	3/1/2012 22:00	0.0072	--
3/1/2012 23:00	0.0085	0.0087	3/1/2012 23:00	SOURCE DOWN	0.0041	3/1/2012 23:00	0.0077	0.0074
3/2/2012 0:00	0.0086	--	3/2/2012 0:00	SOURCE DOWN	--	3/2/2012 0:00	0.0076	--
3/2/2012 1:00	0.0087	--	3/2/2012 1:00	SOURCE DOWN	--	3/2/2012 1:00	0.0077	--
3/2/2012 2:00	0.0087	--	3/2/2012 2:00	SOURCE DOWN	--	3/2/2012 2:00	0.0078	--
3/2/2012 3:00	0.0087	--	3/2/2012 3:00	SOURCE DOWN	--	3/2/2012 3:00	0.0075	--
3/2/2012 4:00	0.0087	--	3/2/2012 4:00	SOURCE DOWN	--	3/2/2012 4:00	0.0075	--
3/2/2012 5:00	0.0085	--	3/2/2012 5:00	SOURCE DOWN	--	3/2/2012 5:00	0.0073	--
3/2/2012 6:00	0.0089	--	3/2/2012 6:00	SOURCE DOWN	--	3/2/2012 6:00	0.0073	--
3/2/2012 7:00	0.0087	--	3/2/2012 7:00	SOURCE DOWN	--	3/2/2012 7:00	0.0072	--
3/2/2012 8:00	0.0087	--	3/2/2012 8:00	SOURCE DOWN	--	3/2/2012 8:00	0.0077	--
3/2/2012 9:00	0.0088	--	3/2/2012 9:00	SOURCE DOWN	--	3/2/2012 9:00	0.0079	--
3/2/2012 10:00	0.0088	--	3/2/2012 10:00	SOURCE DOWN	--	3/2/2012 10:00	0.0081	--
3/2/2012 11:00	0.0088	--	3/2/2012 11:00	SOURCE DOWN	--	3/2/2012 11:00	0.0084	--
3/2/2012 12:00	0.0089	--	3/2/2012 12:00	SOURCE DOWN	--	3/2/2012 12:00	0.0072	--
3/2/2012 13:00	0.0086	--	3/2/2012 13:00	SOURCE DOWN	--	3/2/2012 13:00	0.0073	--
3/2/2012 14:00	0.0085	--	3/2/2012 14:00	SOURCE DOWN	--	3/2/2012 14:00	0.0076	--
3/2/2012 15:00	0.0088	--	3/2/2012 15:00	SOURCE DOWN	--	3/2/2012 15:00	0.0077	--
3/2/2012 16:00	0.0087	--	3/2/2012 16:00	SOURCE DOWN	--	3/2/2012 16:00	0.0076	--
3/2/2012 17:00	0.0085	--	3/2/2012 17:00	SOURCE DOWN	--	3/2/2012 17:00	0.0073	--
3/2/2012 18:00	0.0084	--	3/2/2012 18:00	SOURCE DOWN	--	3/2/2012 18:00	0.0077	--
3/2/2012 19:00	0.0086	--	3/2/2012 19:00	SOURCE DOWN	--	3/2/2012 19:00	0.0075	--
3/2/2012 20:00	0.0087	--	3/2/2012 20:00	SOURCE DOWN	--	3/2/2012 20:00	0.0074	--
3/2/2012 21:00	0.0087	--	3/2/2012 21:00	SOURCE DOWN	--	3/2/2012 21:00	0.0075	--
3/2/2012 22:00	0.0087	--	3/2/2012 22:00	SOURCE DOWN	--	3/2/2012 22:00	0.0076	--
3/2/2012 23:00	0.0095	0.0087	3/2/2012 23:00	SOURCE DOWN	0.0041	3/2/2012 23:00	0.0087	0.0074
3/3/2012 0:00	0.0094	--	3/3/2012 0:00	SOURCE DOWN	--	3/3/2012 0:00	0.0081	--
3/3/2012 1:00	0.0089	--	3/3/2012 1:00	SOURCE DOWN	--	3/3/2012 1:00	0.0072	--
3/3/2012 2:00	0.0088	--	3/3/2012 2:00	SOURCE DOWN	--	3/3/2012 2:00	0.0069	--
3/3/2012 3:00	0.0088	--	3/3/2012 3:00	SOURCE DOWN	--	3/3/2012 3:00	0.0076	--
3/3/2012 4:00	0.0085	--	3/3/2012 4:00	SOURCE DOWN	--	3/3/2012 4:00	0.0075	--
3/3/2012 5:00	0.0086	--	3/3/2012 5:00	SOURCE DOWN	--	3/3/2012 5:00	0.0074	--
3/3/2012 6:00	0.0091	--	3/3/2012 6:00	SOURCE DOWN	--	3/3/2012 6:00	0.0077	--
3/3/2012 7:00	0.0086	--	3/3/2012 7:00	SOURCE DOWN	--	3/3/2012 7:00	0.0072	--
3/3/2012 8:00	0.0086	--	3/3/2012 8:00	SOURCE DOWN	--	3/3/2012 8:00	0.0071	--
3/3/2012 9:00	0.0087	--	3/3/2012 9:00	SOURCE DOWN	--	3/3/2012 9:00	0.0073	--
3/3/2012 10:00	0.0086	--	3/3/2012 10:00	SOURCE DOWN	--	3/3/2012 10:00	0.0067	--
3/3/2012 11:00	0.0088	--	3/3/2012 11:00	SOURCE DOWN	--	3/3/2012 11:00	0.0072	--

Package Boiler No. 1 EPN 81BF01			Package Boiler No. 2 EPN 50BF02			Package Boiler No. 3 EPN 50BF03		
Date	NO_X (lb/MMBtu)	NO_X (lb/MMBtu) 30-day Rolling Average	Date	NO_X (lb/MMBtu)	NO_X (lb/MMBtu) 30-day Rolling Average	Date	NO_X (lb/MMBtu)	NO_X (lb/MMBtu) 30-day Rolling Average
3/3/2012 12:00	0.0086	--	3/3/2012 12:00	SOURCE DOWN	--	3/3/2012 12:00	0.0075	--
3/3/2012 13:00	0.0086	--	3/3/2012 13:00	SOURCE DOWN	--	3/3/2012 13:00	0.0072	--
3/3/2012 14:00	0.0090	--	3/3/2012 14:00	SOURCE DOWN	--	3/3/2012 14:00	0.0076	--
3/3/2012 15:00	0.0093	--	3/3/2012 15:00	SOURCE DOWN	--	3/3/2012 15:00	0.0075	--
3/3/2012 16:00	0.0094	--	3/3/2012 16:00	SOURCE DOWN	--	3/3/2012 16:00	0.0077	--
3/3/2012 17:00	0.0096	--	3/3/2012 17:00	SOURCE DOWN	--	3/3/2012 17:00	0.0081	--
3/3/2012 18:00	0.0093	--	3/3/2012 18:00	SOURCE DOWN	--	3/3/2012 18:00	0.0076	--
3/3/2012 19:00	0.0099	--	3/3/2012 19:00	SOURCE DOWN	--	3/3/2012 19:00	0.0075	--
3/3/2012 20:00	0.0095	--	3/3/2012 20:00	SOURCE DOWN	--	3/3/2012 20:00	0.0074	--
3/3/2012 21:00	0.0093	--	3/3/2012 21:00	SOURCE DOWN	--	3/3/2012 21:00	0.0071	--
3/3/2012 22:00	0.0095	--	3/3/2012 22:00	SOURCE DOWN	--	3/3/2012 22:00	0.0072	--
3/3/2012 23:00	0.0100	0.0087	3/3/2012 23:00	SOURCE DOWN	0.0041	3/3/2012 23:00	0.0076	0.0074
3/4/2012 0:00	0.0097	--	3/4/2012 0:00	SOURCE DOWN	--	3/4/2012 0:00	0.0075	--
3/4/2012 1:00	0.0097	--	3/4/2012 1:00	SOURCE DOWN	--	3/4/2012 1:00	0.0071	--
3/4/2012 2:00	0.0096	--	3/4/2012 2:00	SOURCE DOWN	--	3/4/2012 2:00	0.0071	--
3/4/2012 3:00	0.0093	--	3/4/2012 3:00	SOURCE DOWN	--	3/4/2012 3:00	0.0073	--
3/4/2012 4:00	0.0090	--	3/4/2012 4:00	SOURCE DOWN	--	3/4/2012 4:00	0.0072	--
3/4/2012 5:00	0.0090	--	3/4/2012 5:00	SOURCE DOWN	--	3/4/2012 5:00	0.0069	--
3/4/2012 6:00	0.0093	--	3/4/2012 6:00	SOURCE DOWN	--	3/4/2012 6:00	0.0092	--
3/4/2012 7:00	0.0092	--	3/4/2012 7:00	SOURCE DOWN	--	3/4/2012 7:00	0.0077	--
3/4/2012 8:00	0.0095	--	3/4/2012 8:00	SOURCE DOWN	--	3/4/2012 8:00	0.0079	--
3/4/2012 9:00	0.0095	--	3/4/2012 9:00	SOURCE DOWN	--	3/4/2012 9:00	0.0081	--
3/4/2012 10:00	0.0096	--	3/4/2012 10:00	0.0684	--	3/4/2012 10:00	0.0075	--
3/4/2012 11:00	0.0101	--	3/4/2012 11:00	0.0592	--	3/4/2012 11:00	0.0071	--
3/4/2012 12:00	0.0104	--	3/4/2012 12:00	0.0676	--	3/4/2012 12:00	0.0074	--
3/4/2012 13:00	0.0097	--	3/4/2012 13:00	0.0537	--	3/4/2012 13:00	0.0067	--
3/4/2012 14:00	0.0096	--	3/4/2012 14:00	0.0721	--	3/4/2012 14:00	0.0076	--
3/4/2012 15:00	0.0096	--	3/4/2012 15:00	0.0769	--	3/4/2012 15:00	0.0074	--
3/4/2012 16:00	0.0094	--	3/4/2012 16:00	0.0776	--	3/4/2012 16:00	0.0073	--
3/4/2012 17:00	0.0100	--	3/4/2012 17:00	0.0011	--	3/4/2012 17:00	0.0084	--
3/4/2012 18:00	0.0089	--	3/4/2012 18:00	0.0013	--	3/4/2012 18:00	0.0077	--
3/4/2012 19:00	0.0085	--	3/4/2012 19:00	SOURCE DOWN	--	3/4/2012 19:00	0.0074	--
3/4/2012 20:00	0.0085	--	3/4/2012 20:00	SOURCE DOWN	--	3/4/2012 20:00	0.0071	--
3/4/2012 21:00	0.0084	--	3/4/2012 21:00	SOURCE DOWN	--	3/4/2012 21:00	0.0067	--
3/4/2012 22:00	0.0084	--	3/4/2012 22:00	SOURCE DOWN	--	3/4/2012 22:00	0.0073	--
3/4/2012 23:00	0.0085	0.0087	3/4/2012 23:00	SOURCE DOWN	0.0047	3/4/2012 23:00	0.0059	0.0074
3/5/2012 0:00	0.0086	--	3/5/2012 0:00	SOURCE DOWN	--	3/5/2012 0:00	0.0066	--
3/5/2012 1:00	0.0086	--	3/5/2012 1:00	SOURCE DOWN	--	3/5/2012 1:00	0.0071	--
3/5/2012 2:00	0.0085	--	3/5/2012 2:00	SOURCE DOWN	--	3/5/2012 2:00	0.0082	--
3/5/2012 3:00	0.0086	--	3/5/2012 3:00	SOURCE DOWN	--	3/5/2012 3:00	0.0069	--
3/5/2012 4:00	0.0086	--	3/5/2012 4:00	SOURCE DOWN	--	3/5/2012 4:00	0.0069	--

Package Boiler No. 1 EPN 81BF01			Package Boiler No. 2 EPN 50BF02			Package Boiler No. 3 EPN 50BF03		
Date	NO_X (lb/MMBtu)	NO_X (lb/MMBtu) 30-day Rolling Average	Date	NO_X (lb/MMBtu)	NO_X (lb/MMBtu) 30-day Rolling Average	Date	NO_X (lb/MMBtu)	NO_X (lb/MMBtu) 30-day Rolling Average
3/5/2012 5:00	0.0087	--	3/5/2012 5:00	SOURCE DOWN	--	3/5/2012 5:00	0.0069	--
3/5/2012 6:00	0.0088	--	3/5/2012 6:00	SOURCE DOWN	--	3/5/2012 6:00	0.0074	--
3/5/2012 7:00	0.0089	--	3/5/2012 7:00	SOURCE DOWN	--	3/5/2012 7:00	0.0071	--
3/5/2012 8:00	SOURCE DOWN	--	3/5/2012 8:00	SOURCE DOWN	--	3/5/2012 8:00	SOURCE DOWN	--
3/5/2012 9:00	SOURCE DOWN	--	3/5/2012 9:00	SOURCE DOWN	--	3/5/2012 9:00	SOURCE DOWN	--
3/5/2012 10:00	SOURCE DOWN	--	3/5/2012 10:00	SOURCE DOWN	--	3/5/2012 10:00	SOURCE DOWN	--
3/5/2012 11:00	SOURCE DOWN	--	3/5/2012 11:00	SOURCE DOWN	--	3/5/2012 11:00	SOURCE DOWN	--
3/5/2012 12:00	SOURCE DOWN	--	3/5/2012 12:00	SOURCE DOWN	--	3/5/2012 12:00	SOURCE DOWN	--
3/5/2012 13:00	SOURCE DOWN	--	3/5/2012 13:00	SOURCE DOWN	--	3/5/2012 13:00	0.0079	--
3/5/2012 14:00	SOURCE DOWN	--	3/5/2012 14:00	SOURCE DOWN	--	3/5/2012 14:00	SOURCE DOWN	--
3/5/2012 15:00	SOURCE DOWN	--	3/5/2012 15:00	SOURCE DOWN	--	3/5/2012 15:00	SOURCE DOWN	--
3/5/2012 16:00	SOURCE DOWN	--	3/5/2012 16:00	SOURCE DOWN	--	3/5/2012 16:00	SOURCE DOWN	--
3/5/2012 17:00	SOURCE DOWN	--	3/5/2012 17:00	SOURCE DOWN	--	3/5/2012 17:00	SOURCE DOWN	--
3/5/2012 18:00	SOURCE DOWN	--	3/5/2012 18:00	SOURCE DOWN	--	3/5/2012 18:00	SOURCE DOWN	--
3/5/2012 19:00	SOURCE DOWN	--	3/5/2012 19:00	SOURCE DOWN	--	3/5/2012 19:00	SOURCE DOWN	--
3/5/2012 20:00	SOURCE DOWN	--	3/5/2012 20:00	SOURCE DOWN	--	3/5/2012 20:00	SOURCE DOWN	--
3/5/2012 21:00	SOURCE DOWN	--	3/5/2012 21:00	SOURCE DOWN	--	3/5/2012 21:00	SOURCE DOWN	--
3/5/2012 22:00	SOURCE DOWN	--	3/5/2012 22:00	SOURCE DOWN	--	3/5/2012 22:00	SOURCE DOWN	--
3/5/2012 23:00	SOURCE DOWN	0.0085	3/5/2012 23:00	SOURCE DOWN	0.0047	3/5/2012 23:00	SOURCE DOWN	0.0073
3/6/2012 0:00	SOURCE DOWN	--	3/6/2012 0:00	SOURCE DOWN	--	3/6/2012 0:00	SOURCE DOWN	--
3/6/2012 1:00	SOURCE DOWN	--	3/6/2012 1:00	SOURCE DOWN	--	3/6/2012 1:00	0.0072	--
3/6/2012 2:00	SOURCE DOWN	--	3/6/2012 2:00	SOURCE DOWN	--	3/6/2012 2:00	SOURCE DOWN	--
3/6/2012 3:00	SOURCE DOWN	--	3/6/2012 3:00	SOURCE DOWN	--	3/6/2012 3:00	SOURCE DOWN	--
3/6/2012 4:00	SOURCE DOWN	--	3/6/2012 4:00	SOURCE DOWN	--	3/6/2012 4:00	SOURCE DOWN	--
3/6/2012 5:00	SOURCE DOWN	--	3/6/2012 5:00	SOURCE DOWN	--	3/6/2012 5:00	SOURCE DOWN	--
3/6/2012 6:00	SOURCE DOWN	--	3/6/2012 6:00	SOURCE DOWN	--	3/6/2012 6:00	SOURCE DOWN	--
3/6/2012 7:00	SOURCE DOWN	--	3/6/2012 7:00	SOURCE DOWN	--	3/6/2012 7:00	SOURCE DOWN	--
3/6/2012 8:00	SOURCE DOWN	--	3/6/2012 8:00	SOURCE DOWN	--	3/6/2012 8:00	SOURCE DOWN	--
3/6/2012 9:00	SOURCE DOWN	--	3/6/2012 9:00	SOURCE DOWN	--	3/6/2012 9:00	SOURCE DOWN	--
3/6/2012 10:00	SOURCE DOWN	--	3/6/2012 10:00	SOURCE DOWN	--	3/6/2012 10:00	SOURCE DOWN	--
3/6/2012 11:00	0.0086	--	3/6/2012 11:00	SOURCE DOWN	--	3/6/2012 11:00	0.0084	--
3/6/2012 12:00	0.0087	--	3/6/2012 12:00	SOURCE DOWN	--	3/6/2012 12:00	0.0081	--
3/6/2012 13:00	0.0089	--	3/6/2012 13:00	0.0976	--	3/6/2012 13:00	0.0067	--
3/6/2012 14:00	0.0086	--	3/6/2012 14:00	0.0670	--	3/6/2012 14:00	0.0074	--
3/6/2012 15:00	0.0086	--	3/6/2012 15:00	0.0737	--	3/6/2012 15:00	0.0075	--
3/6/2012 16:00	0.0084	--	3/6/2012 16:00	0.0720	--	3/6/2012 16:00	0.0066	--
3/6/2012 17:00	0.0086	--	3/6/2012 17:00	0.0771	--	3/6/2012 17:00	0.0071	--
3/6/2012 18:00	0.0085	--	3/6/2012 18:00	0.0772	--	3/6/2012 18:00	0.0068	--
3/6/2012 19:00	0.0084	--	3/6/2012 19:00	0.0750	--	3/6/2012 19:00	0.0067	--
3/6/2012 20:00	0.0085	--	3/6/2012 20:00	0.0720	--	3/6/2012 20:00	0.0066	--
3/6/2012 21:00	0.0060	--	3/6/2012 21:00	0.0170	--	3/6/2012 21:00	0.0061	--

Package Boiler No. 1 EPN 81BF01			Package Boiler No. 2 EPN 50BF02			Package Boiler No. 3 EPN 50BF03		
Date	NO_X (lb/MMBtu)	NO_X (lb/MMBtu) 30-day Rolling Average	Date	NO_X (lb/MMBtu)	NO_X (lb/MMBtu) 30-day Rolling Average	Date	NO_X (lb/MMBtu)	NO_X (lb/MMBtu) 30-day Rolling Average
3/6/2012 22:00	0.0069	--	3/6/2012 22:00	0.0078	--	3/6/2012 22:00	0.0066	--
3/6/2012 23:00	0.0086	0.0084	3/6/2012 23:00	0.0074	0.0056	3/6/2012 23:00	0.0075	0.0072
3/7/2012 0:00	0.0086	--	3/7/2012 0:00	0.0084	--	3/7/2012 0:00	0.0073	--
3/7/2012 1:00	0.0086	--	3/7/2012 1:00	0.0088	--	3/7/2012 1:00	0.0071	--
3/7/2012 2:00	0.0085	--	3/7/2012 2:00	0.0087	--	3/7/2012 2:00	0.0071	--
3/7/2012 3:00	0.0086	--	3/7/2012 3:00	0.0087	--	3/7/2012 3:00	0.0070	--
3/7/2012 4:00	0.0086	--	3/7/2012 4:00	0.0093	--	3/7/2012 4:00	0.0070	--
3/7/2012 5:00	0.0086	--	3/7/2012 5:00	0.0100	--	3/7/2012 5:00	0.0075	--
3/7/2012 6:00	0.0090	--	3/7/2012 6:00	0.0103	--	3/7/2012 6:00	0.0072	--
3/7/2012 7:00	0.0084	--	3/7/2012 7:00	0.0094	--	3/7/2012 7:00	0.0067	--
3/7/2012 8:00	0.0087	--	3/7/2012 8:00	0.0060	--	3/7/2012 8:00	0.0075	--
3/7/2012 9:00	0.0086	--	3/7/2012 9:00	0.0067	--	3/7/2012 9:00	0.0078	--
3/7/2012 10:00	0.0088	--	3/7/2012 10:00	0.0070	--	3/7/2012 10:00	0.0080	--
3/7/2012 11:00	0.0086	--	3/7/2012 11:00	0.0071	--	3/7/2012 11:00	0.0072	--
3/7/2012 12:00	0.0086	--	3/7/2012 12:00	0.0068	--	3/7/2012 12:00	0.0072	--
3/7/2012 13:00	0.0087	--	3/7/2012 13:00	0.0069	--	3/7/2012 13:00	0.0088	--
3/7/2012 14:00	0.0086	--	3/7/2012 14:00	0.0066	--	3/7/2012 14:00	0.0060	--
3/7/2012 15:00	0.0086	--	3/7/2012 15:00	0.0066	--	3/7/2012 15:00	0.0069	--
3/7/2012 16:00	0.0086	--	3/7/2012 16:00	0.0067	--	3/7/2012 16:00	0.0053	--
3/7/2012 17:00	0.0085	--	3/7/2012 17:00	0.0067	--	3/7/2012 17:00	0.0081	--
3/7/2012 18:00	0.0085	--	3/7/2012 18:00	0.0066	--	3/7/2012 18:00	0.0073	--
3/7/2012 19:00	0.0086	--	3/7/2012 19:00	0.0067	--	3/7/2012 19:00	0.0074	--
3/7/2012 20:00	0.0086	--	3/7/2012 20:00	0.0066	--	3/7/2012 20:00	0.0072	--
3/7/2012 21:00	0.0086	--	3/7/2012 21:00	0.0066	--	3/7/2012 21:00	0.0072	--
3/7/2012 22:00	0.0086	--	3/7/2012 22:00	0.0066	--	3/7/2012 22:00	0.0072	--
3/7/2012 23:00	0.0086	0.0084	3/7/2012 23:00	0.0067	0.0059	3/7/2012 23:00	0.0075	0.0072
3/8/2012 0:00	0.0086	--	3/8/2012 0:00	0.0067	--	3/8/2012 0:00	0.0072	--
3/8/2012 1:00	0.0087	--	3/8/2012 1:00	0.0067	--	3/8/2012 1:00	0.0071	--
3/8/2012 2:00	0.0087	--	3/8/2012 2:00	0.0067	--	3/8/2012 2:00	0.0074	--
3/8/2012 3:00	0.0086	--	3/8/2012 3:00	0.0066	--	3/8/2012 3:00	0.0072	--
3/8/2012 4:00	0.0087	--	3/8/2012 4:00	0.0067	--	3/8/2012 4:00	0.0071	--
3/8/2012 5:00	0.0086	--	3/8/2012 5:00	0.0067	--	3/8/2012 5:00	0.0069	--
3/8/2012 6:00	0.0087	--	3/8/2012 6:00	0.0066	--	3/8/2012 6:00	0.0069	--
3/8/2012 7:00	0.0087	--	3/8/2012 7:00	0.0066	--	3/8/2012 7:00	0.0072	--
3/8/2012 8:00	0.0086	--	3/8/2012 8:00	0.0066	--	3/8/2012 8:00	0.0073	--
3/8/2012 9:00	0.0087	--	3/8/2012 9:00	0.0067	--	3/8/2012 9:00	0.0073	--
3/8/2012 10:00	0.0087	--	3/8/2012 10:00	0.0067	--	3/8/2012 10:00	0.0072	--
3/8/2012 11:00	0.0087	--	3/8/2012 11:00	0.0068	--	3/8/2012 11:00	0.0074	--
3/8/2012 12:00	0.0086	--	3/8/2012 12:00	0.0067	--	3/8/2012 12:00	0.0072	--
3/8/2012 13:00	0.0085	--	3/8/2012 13:00	0.0066	--	3/8/2012 13:00	0.0071	--
3/8/2012 14:00	0.0086	--	3/8/2012 14:00	0.0066	--	3/8/2012 14:00	0.0072	--

Package Boiler No. 1 EPN 81BF01			Package Boiler No. 2 EPN 50BF02			Package Boiler No. 3 EPN 50BF03		
Date	NO_X (lb/MMBtu)	NO_X (lb/MMBtu) 30-day Rolling Average	Date	NO_X (lb/MMBtu)	NO_X (lb/MMBtu) 30-day Rolling Average	Date	NO_X (lb/MMBtu)	NO_X (lb/MMBtu) 30-day Rolling Average
3/8/2012 15:00	0.0086	--	3/8/2012 15:00	0.0067	--	3/8/2012 15:00	0.0071	--
3/8/2012 16:00	0.0088	--	3/8/2012 16:00	0.0067	--	3/8/2012 16:00	0.0069	--
3/8/2012 17:00	0.0087	--	3/8/2012 17:00	0.0067	--	3/8/2012 17:00	0.0076	--
3/8/2012 18:00	0.0086	--	3/8/2012 18:00	0.0066	--	3/8/2012 18:00	0.0073	--
3/8/2012 19:00	0.0086	--	3/8/2012 19:00	0.0067	--	3/8/2012 19:00	0.0072	--
3/8/2012 20:00	0.0087	--	3/8/2012 20:00	0.0067	--	3/8/2012 20:00	0.0072	--
3/8/2012 21:00	0.0086	--	3/8/2012 21:00	0.0067	--	3/8/2012 21:00	0.0069	--
3/8/2012 22:00	0.0087	--	3/8/2012 22:00	0.0068	--	3/8/2012 22:00	0.0073	--
3/8/2012 23:00	0.0087	0.0084	3/8/2012 23:00	0.0069	0.0061	3/8/2012 23:00	0.0080	0.0072
3/9/2012 0:00	0.0087	--	3/9/2012 0:00	0.0067	--	3/9/2012 0:00	0.0071	--
3/9/2012 1:00	0.0086	--	3/9/2012 1:00	0.0066	--	3/9/2012 1:00	0.0068	--
3/9/2012 2:00	0.0087	--	3/9/2012 2:00	0.0068	--	3/9/2012 2:00	0.0078	--
3/9/2012 3:00	0.0086	--	3/9/2012 3:00	0.0067	--	3/9/2012 3:00	0.0070	--
3/9/2012 4:00	0.0087	--	3/9/2012 4:00	0.0067	--	3/9/2012 4:00	0.0063	--
3/9/2012 5:00	0.0086	--	3/9/2012 5:00	0.0068	--	3/9/2012 5:00	0.0074	--
3/9/2012 6:00	0.0088	--	3/9/2012 6:00	0.0070	--	3/9/2012 6:00	0.0058	--
3/9/2012 7:00	0.0087	--	3/9/2012 7:00	0.0068	--	3/9/2012 7:00	0.0077	--
3/9/2012 8:00	0.0086	--	3/9/2012 8:00	0.0067	--	3/9/2012 8:00	0.0064	--
3/9/2012 9:00	0.0086	--	3/9/2012 9:00	0.0067	--	3/9/2012 9:00	0.0078	--
3/9/2012 10:00	0.0087	--	3/9/2012 10:00	0.0068	--	3/9/2012 10:00	0.0068	--
3/9/2012 11:00	0.0086	--	3/9/2012 11:00	0.0067	--	3/9/2012 11:00	0.0076	--
3/9/2012 12:00	0.0086	--	3/9/2012 12:00	0.0068	--	3/9/2012 12:00	0.0073	--
3/9/2012 13:00	0.0086	--	3/9/2012 13:00	0.0066	--	3/9/2012 13:00	0.0068	--
3/9/2012 14:00	0.0086	--	3/9/2012 14:00	0.0067	--	3/9/2012 14:00	0.0066	--
3/9/2012 15:00	0.0085	--	3/9/2012 15:00	0.0066	--	3/9/2012 15:00	0.0075	--
3/9/2012 16:00	0.0085	--	3/9/2012 16:00	0.0072	--	3/9/2012 16:00	0.0074	--
3/9/2012 17:00	0.0087	--	3/9/2012 17:00	0.0071	--	3/9/2012 17:00	0.0063	--
3/9/2012 18:00	0.0087	--	3/9/2012 18:00	0.0068	--	3/9/2012 18:00	0.0067	--
3/9/2012 19:00	0.0086	--	3/9/2012 19:00	0.0068	--	3/9/2012 19:00	0.0074	--
3/9/2012 20:00	0.0086	--	3/9/2012 20:00	0.0068	--	3/9/2012 20:00	0.0074	--
3/9/2012 21:00	0.0086	--	3/9/2012 21:00	0.0067	--	3/9/2012 21:00	0.0071	--
3/9/2012 22:00	0.0087	--	3/9/2012 22:00	0.0069	--	3/9/2012 22:00	0.0067	--
3/9/2012 23:00	0.0085	0.0083	3/9/2012 23:00	0.0069	0.0063	3/9/2012 23:00	0.0077	0.0072
3/10/2012 0:00	0.0086	--	3/10/2012 0:00	0.0068	--	3/10/2012 0:00	0.0070	--
3/10/2012 1:00	0.0085	--	3/10/2012 1:00	0.0068	--	3/10/2012 1:00	0.0076	--
3/10/2012 2:00	0.0087	--	3/10/2012 2:00	0.0069	--	3/10/2012 2:00	0.0065	--
3/10/2012 3:00	0.0086	--	3/10/2012 3:00	0.0069	--	3/10/2012 3:00	0.0071	--
3/10/2012 4:00	0.0086	--	3/10/2012 4:00	0.0069	--	3/10/2012 4:00	0.0070	--
3/10/2012 5:00	0.0085	--	3/10/2012 5:00	0.0067	--	3/10/2012 5:00	0.0071	--
3/10/2012 6:00	0.0093	--	3/10/2012 6:00	0.0069	--	3/10/2012 6:00	0.0084	--
3/10/2012 7:00	0.0086	--	3/10/2012 7:00	0.0068	--	3/10/2012 7:00	0.0073	--

Package Boiler No. 1 EPN 81BF01			Package Boiler No. 2 EPN 50BF02			Package Boiler No. 3 EPN 50BF03		
Date	NO_X (lb/MMBtu)	NO_X (lb/MMBtu) 30-day Rolling Average	Date	NO_X (lb/MMBtu)	NO_X (lb/MMBtu) 30-day Rolling Average	Date	NO_X (lb/MMBtu)	NO_X (lb/MMBtu) 30-day Rolling Average
3/10/2012 8:00	0.0086	--	3/10/2012 8:00	0.0068	--	3/10/2012 8:00	0.0074	--
3/10/2012 9:00	0.0087	--	3/10/2012 9:00	0.0069	--	3/10/2012 9:00	0.0088	--
3/10/2012 10:00	0.0087	--	3/10/2012 10:00	0.0068	--	3/10/2012 10:00	0.0062	--
3/10/2012 11:00	0.0086	--	3/10/2012 11:00	0.0069	--	3/10/2012 11:00	0.0071	--
3/10/2012 12:00	0.0086	--	3/10/2012 12:00	0.0068	--	3/10/2012 12:00	0.0074	--
3/10/2012 13:00	0.0085	--	3/10/2012 13:00	0.0068	--	3/10/2012 13:00	0.0077	--
3/10/2012 14:00	0.0087	--	3/10/2012 14:00	0.0068	--	3/10/2012 14:00	0.0069	--
3/10/2012 15:00	0.0085	--	3/10/2012 15:00	0.0068	--	3/10/2012 15:00	0.0068	--
3/10/2012 16:00	0.0086	--	3/10/2012 16:00	0.0068	--	3/10/2012 16:00	0.0066	--
3/10/2012 17:00	0.0085	--	3/10/2012 17:00	0.0067	--	3/10/2012 17:00	0.0080	--
3/10/2012 18:00	0.0086	--	3/10/2012 18:00	0.0068	--	3/10/2012 18:00	0.0074	--
3/10/2012 19:00	0.0087	--	3/10/2012 19:00	0.0068	--	3/10/2012 19:00	0.0076	--
3/10/2012 20:00	0.0086	--	3/10/2012 20:00	0.0069	--	3/10/2012 20:00	0.0074	--
3/10/2012 21:00	0.0085	--	3/10/2012 21:00	0.0067	--	3/10/2012 21:00	0.0072	--
3/10/2012 22:00	0.0086	--	3/10/2012 22:00	0.0067	--	3/10/2012 22:00	0.0066	--
3/10/2012 23:00	0.0085	0.0083	3/10/2012 23:00	0.0068	0.0066	3/10/2012 23:00	0.0072	0.0072
3/11/2012 0:00	0.0086	--	3/11/2012 0:00	0.0068	--	3/11/2012 0:00	0.0071	--
3/11/2012 1:00	0.0086	--	3/11/2012 1:00	0.0068	--	3/11/2012 1:00	0.0068	--
3/11/2012 2:00	0.0085	--	3/11/2012 2:00	0.0067	--	3/11/2012 2:00	0.0071	--
3/11/2012 3:00	0.0086	--	3/11/2012 3:00	0.0068	--	3/11/2012 3:00	0.0072	--
3/11/2012 4:00	0.0085	--	3/11/2012 4:00	0.0067	--	3/11/2012 4:00	0.0076	--
3/11/2012 5:00	0.0086	--	3/11/2012 5:00	0.0068	--	3/11/2012 5:00	0.0070	--
3/11/2012 6:00	0.0088	--	3/11/2012 6:00	0.0064	--	3/11/2012 6:00	0.0077	--
3/11/2012 7:00	0.0086	--	3/11/2012 7:00	0.0067	--	3/11/2012 7:00	0.0071	--
3/11/2012 8:00	0.0086	--	3/11/2012 8:00	0.0068	--	3/11/2012 8:00	0.0071	--
3/11/2012 9:00	0.0086	--	3/11/2012 9:00	0.0068	--	3/11/2012 9:00	0.0076	--
3/11/2012 10:00	0.0086	--	3/11/2012 10:00	0.0068	--	3/11/2012 10:00	0.0073	--
3/11/2012 11:00	0.0086	--	3/11/2012 11:00	0.0072	--	3/11/2012 11:00	0.0078	--
3/11/2012 12:00	0.0088	--	3/11/2012 12:00	0.0068	--	3/11/2012 12:00	0.0061	--
3/11/2012 13:00	0.0086	--	3/11/2012 13:00	0.0067	--	3/11/2012 13:00	0.0071	--
3/11/2012 14:00	0.0085	--	3/11/2012 14:00	0.0069	--	3/11/2012 14:00	0.0079	--
3/11/2012 15:00	0.0087	--	3/11/2012 15:00	0.0070	--	3/11/2012 15:00	0.0063	--
3/11/2012 16:00	0.0086	--	3/11/2012 16:00	0.0068	--	3/11/2012 16:00	0.0072	--
3/11/2012 17:00	0.0086	--	3/11/2012 17:00	0.0069	--	3/11/2012 17:00	0.0069	--
3/11/2012 18:00	0.0086	--	3/11/2012 18:00	0.0068	--	3/11/2012 18:00	0.0072	--
3/11/2012 19:00	0.0086	--	3/11/2012 19:00	0.0068	--	3/11/2012 19:00	0.0072	--
3/11/2012 20:00	0.0086	--	3/11/2012 20:00	0.0069	--	3/11/2012 20:00	0.0072	--
3/11/2012 21:00	0.0086	--	3/11/2012 21:00	0.0068	--	3/11/2012 21:00	0.0070	--
3/11/2012 22:00	0.0086	--	3/11/2012 22:00	0.0068	--	3/11/2012 22:00	0.0071	--
3/11/2012 23:00	0.0086	0.0083	3/11/2012 23:00	0.0068	0.0068	3/11/2012 23:00	0.0074	0.0071
3/12/2012 0:00	0.0086	--	3/12/2012 0:00	0.0068	--	3/12/2012 0:00	0.0066	--

Package Boiler No. 1 EPN 81BF01			Package Boiler No. 2 EPN 50BF02			Package Boiler No. 3 EPN 50BF03		
Date	NO_X (lb/MMBtu)	NO_X (lb/MMBtu) 30-day Rolling Average	Date	NO_X (lb/MMBtu)	NO_X (lb/MMBtu) 30-day Rolling Average	Date	NO_X (lb/MMBtu)	NO_X (lb/MMBtu) 30-day Rolling Average
3/12/2012 1:00	0.0086	--	3/12/2012 1:00	0.0069	--	3/12/2012 1:00	0.0064	--
3/12/2012 2:00	0.0086	--	3/12/2012 2:00	0.0068	--	3/12/2012 2:00	0.0074	--
3/12/2012 3:00	0.0086	--	3/12/2012 3:00	0.0068	--	3/12/2012 3:00	0.0071	--
3/12/2012 4:00	0.0087	--	3/12/2012 4:00	0.0068	--	3/12/2012 4:00	0.0080	--
3/12/2012 5:00	0.0088	--	3/12/2012 5:00	0.0057	--	3/12/2012 5:00	0.0081	--
3/12/2012 6:00	0.0085	--	3/12/2012 6:00	0.0068	--	3/12/2012 6:00	0.0073	--
3/12/2012 7:00	0.0086	--	3/12/2012 7:00	0.0074	--	3/12/2012 7:00	0.0071	--
3/12/2012 8:00	0.0086	--	3/12/2012 8:00	0.0075	--	3/12/2012 8:00	0.0069	--
3/12/2012 9:00	0.0086	--	3/12/2012 9:00	0.0075	--	3/12/2012 9:00	0.0069	--
3/12/2012 10:00	0.0085	--	3/12/2012 10:00	0.0075	--	3/12/2012 10:00	0.0076	--
3/12/2012 11:00	0.0085	--	3/12/2012 11:00	0.0071	--	3/12/2012 11:00	0.0074	--
3/12/2012 12:00	0.0084	--	3/12/2012 12:00	0.0082	--	3/12/2012 12:00	0.0068	--
3/12/2012 13:00	0.0085	--	3/12/2012 13:00	0.0074	--	3/12/2012 13:00	0.0073	--
3/12/2012 14:00	0.0085	--	3/12/2012 14:00	0.0074	--	3/12/2012 14:00	0.0069	--
3/12/2012 15:00	0.0085	--	3/12/2012 15:00	0.0074	--	3/12/2012 15:00	0.0072	--
3/12/2012 16:00	0.0084	--	3/12/2012 16:00	0.0074	--	3/12/2012 16:00	0.0070	--
3/12/2012 17:00	0.0085	--	3/12/2012 17:00	0.0074	--	3/12/2012 17:00	0.0075	--
3/12/2012 18:00	0.0086	--	3/12/2012 18:00	0.0075	--	3/12/2012 18:00	0.0062	--
3/12/2012 19:00	0.0083	--	3/12/2012 19:00	0.0072	--	3/12/2012 19:00	0.0069	--
3/12/2012 20:00	0.0083	--	3/12/2012 20:00	0.0072	--	3/12/2012 20:00	0.0070	--
3/12/2012 21:00	0.0084	--	3/12/2012 21:00	0.0074	--	3/12/2012 21:00	0.0070	--
3/12/2012 22:00	0.0085	--	3/12/2012 22:00	0.0075	--	3/12/2012 22:00	0.0075	--
3/12/2012 23:00	0.0085	0.0083	3/12/2012 23:00	0.0075	0.0070	3/12/2012 23:00	0.0068	0.0071
3/13/2012 0:00	0.0085	--	3/13/2012 0:00	0.0075	--	3/13/2012 0:00	0.0068	--
3/13/2012 1:00	0.0084	--	3/13/2012 1:00	0.0074	--	3/13/2012 1:00	0.0069	--
3/13/2012 2:00	0.0085	--	3/13/2012 2:00	0.0074	--	3/13/2012 2:00	0.0072	--
3/13/2012 3:00	0.0084	--	3/13/2012 3:00	0.0074	--	3/13/2012 3:00	0.0069	--
3/13/2012 4:00	0.0084	--	3/13/2012 4:00	0.0074	--	3/13/2012 4:00	0.0071	--
3/13/2012 5:00	0.0087	--	3/13/2012 5:00	0.0081	--	3/13/2012 5:00	0.0068	--
3/13/2012 6:00	0.0085	--	3/13/2012 6:00	0.0079	--	3/13/2012 6:00	0.0081	--
3/13/2012 7:00	0.0083	--	3/13/2012 7:00	0.0075	--	3/13/2012 7:00	0.0058	--
3/13/2012 8:00	0.0085	--	3/13/2012 8:00	0.0080	--	3/13/2012 8:00	0.0071	--
3/13/2012 9:00	0.0084	--	3/13/2012 9:00	0.0081	--	3/13/2012 9:00	0.0071	--
3/13/2012 10:00	0.0085	--	3/13/2012 10:00	0.0081	--	3/13/2012 10:00	0.0074	--
3/13/2012 11:00	0.0084	--	3/13/2012 11:00	0.0081	--	3/13/2012 11:00	0.0071	--
3/13/2012 12:00	0.0085	--	3/13/2012 12:00	0.0081	--	3/13/2012 12:00	0.0073	--
3/13/2012 13:00	0.0085	--	3/13/2012 13:00	0.0081	--	3/13/2012 13:00	0.0074	--
3/13/2012 14:00	0.0085	--	3/13/2012 14:00	0.0081	--	3/13/2012 14:00	0.0069	--
3/13/2012 15:00	0.0085	--	3/13/2012 15:00	0.0081	--	3/13/2012 15:00	0.0072	--
3/13/2012 16:00	0.0084	--	3/13/2012 16:00	0.0080	--	3/13/2012 16:00	0.0073	--
3/13/2012 17:00	0.0084	--	3/13/2012 17:00	0.0080	--	3/13/2012 17:00	0.0073	--

Package Boiler No. 1 EPN 81BF01			Package Boiler No. 2 EPN 50BF02			Package Boiler No. 3 EPN 50BF03		
Date	NO_X (lb/MMBtu)	NO_X (lb/MMBtu) 30-day Rolling Average	Date	NO_X (lb/MMBtu)	NO_X (lb/MMBtu) 30-day Rolling Average	Date	NO_X (lb/MMBtu)	NO_X (lb/MMBtu) 30-day Rolling Average
3/13/2012 18:00	0.0084	--	3/13/2012 18:00	0.0079	--	3/13/2012 18:00	0.0071	--
3/13/2012 19:00	0.0084	--	3/13/2012 19:00	0.0080	--	3/13/2012 19:00	0.0066	--
3/13/2012 20:00	0.0085	--	3/13/2012 20:00	0.0080	--	3/13/2012 20:00	0.0068	--
3/13/2012 21:00	0.0084	--	3/13/2012 21:00	0.0080	--	3/13/2012 21:00	0.0073	--
3/13/2012 22:00	0.0085	--	3/13/2012 22:00	0.0080	--	3/13/2012 22:00	0.0071	--
3/13/2012 23:00	0.0085	0.0083	3/13/2012 23:00	0.0080	0.0073	3/13/2012 23:00	0.0066	0.0071
3/14/2012 0:00	0.0086	--	3/14/2012 0:00	0.0081	--	3/14/2012 0:00	0.0074	--
3/14/2012 1:00	0.0083	--	3/14/2012 1:00	0.0080	--	3/14/2012 1:00	0.0070	--
3/14/2012 2:00	0.0084	--	3/14/2012 2:00	0.0080	--	3/14/2012 2:00	0.0069	--
3/14/2012 3:00	0.0085	--	3/14/2012 3:00	0.0080	--	3/14/2012 3:00	0.0071	--
3/14/2012 4:00	0.0085	--	3/14/2012 4:00	0.0081	--	3/14/2012 4:00	0.0073	--
3/14/2012 5:00	0.0088	--	3/14/2012 5:00	0.0083	--	3/14/2012 5:00	0.0061	--
3/14/2012 6:00	0.0083	--	3/14/2012 6:00	0.0077	--	3/14/2012 6:00	0.0070	--
3/14/2012 7:00	0.0084	--	3/14/2012 7:00	0.0079	--	3/14/2012 7:00	0.0070	--
3/14/2012 8:00	0.0085	--	3/14/2012 8:00	0.0081	--	3/14/2012 8:00	0.0073	--
3/14/2012 9:00	0.0086	--	3/14/2012 9:00	0.0080	--	3/14/2012 9:00	0.0072	--
3/14/2012 10:00	0.0086	--	3/14/2012 10:00	0.0081	--	3/14/2012 10:00	0.0072	--
3/14/2012 11:00	0.0085	--	3/14/2012 11:00	0.0081	--	3/14/2012 11:00	0.0072	--
3/14/2012 12:00	0.0085	--	3/14/2012 12:00	0.0080	--	3/14/2012 12:00	0.0066	--
3/14/2012 13:00	0.0086	--	3/14/2012 13:00	0.0080	--	3/14/2012 13:00	0.0075	--
3/14/2012 14:00	0.0085	--	3/14/2012 14:00	0.0080	--	3/14/2012 14:00	0.0075	--
3/14/2012 15:00	0.0085	--	3/14/2012 15:00	0.0079	--	3/14/2012 15:00	0.0066	--
3/14/2012 16:00	0.0085	--	3/14/2012 16:00	0.0080	--	3/14/2012 16:00	0.0069	--
3/14/2012 17:00	0.0085	--	3/14/2012 17:00	0.0080	--	3/14/2012 17:00	0.0072	--
3/14/2012 18:00	0.0085	--	3/14/2012 18:00	0.0080	--	3/14/2012 18:00	0.0068	--
3/14/2012 19:00	0.0084	--	3/14/2012 19:00	0.0080	--	3/14/2012 19:00	0.0071	--
3/14/2012 20:00	0.0085	--	3/14/2012 20:00	0.0080	--	3/14/2012 20:00	0.0073	--
3/14/2012 21:00	0.0085	--	3/14/2012 21:00	0.0080	--	3/14/2012 21:00	0.0067	--
3/14/2012 22:00	0.0085	--	3/14/2012 22:00	0.0081	--	3/14/2012 22:00	0.0074	--
3/14/2012 23:00	0.0085	0.0083	3/14/2012 23:00	0.0080	0.0076	3/14/2012 23:00	0.0072	0.0071
3/15/2012 0:00	0.0085	--	3/15/2012 0:00	0.0080	--	3/15/2012 0:00	0.0070	--
3/15/2012 1:00	0.0085	--	3/15/2012 1:00	0.0080	--	3/15/2012 1:00	0.0071	--
3/15/2012 2:00	0.0085	--	3/15/2012 2:00	0.0081	--	3/15/2012 2:00	0.0074	--
3/15/2012 3:00	0.0085	--	3/15/2012 3:00	0.0080	--	3/15/2012 3:00	0.0066	--
3/15/2012 4:00	0.0085	--	3/15/2012 4:00	0.0080	--	3/15/2012 4:00	0.0071	--
3/15/2012 5:00	0.0088	--	3/15/2012 5:00	0.0073	--	3/15/2012 5:00	0.0082	--
3/15/2012 6:00	0.0086	--	3/15/2012 6:00	0.0079	--	3/15/2012 6:00	0.0069	--
3/15/2012 7:00	0.0084	--	3/15/2012 7:00	0.0080	--	3/15/2012 7:00	0.0075	--
3/15/2012 8:00	0.0085	--	3/15/2012 8:00	0.0080	--	3/15/2012 8:00	0.0072	--
3/15/2012 9:00	0.0086	--	3/15/2012 9:00	0.0081	--	3/15/2012 9:00	0.0075	--
3/15/2012 10:00	0.0085	--	3/15/2012 10:00	0.0081	--	3/15/2012 10:00	0.0073	--

Package Boiler No. 1 EPN 81BF01			Package Boiler No. 2 EPN 50BF02			Package Boiler No. 3 EPN 50BF03		
Date	NO_X (lb/MMBtu)	NO_X (lb/MMBtu) 30-day Rolling Average	Date	NO_X (lb/MMBtu)	NO_X (lb/MMBtu) 30-day Rolling Average	Date	NO_X (lb/MMBtu)	NO_X (lb/MMBtu) 30-day Rolling Average
3/15/2012 11:00	0.0085	--	3/15/2012 11:00	0.0081	--	3/15/2012 11:00	0.0074	--
3/15/2012 12:00	0.0085	--	3/15/2012 12:00	0.0080	--	3/15/2012 12:00	0.0068	--
3/15/2012 13:00	0.0085	--	3/15/2012 13:00	0.0080	--	3/15/2012 13:00	0.0072	--
3/15/2012 14:00	0.0085	--	3/15/2012 14:00	0.0080	--	3/15/2012 14:00	0.0072	--
3/15/2012 15:00	0.0085	--	3/15/2012 15:00	0.0080	--	3/15/2012 15:00	0.0070	--
3/15/2012 16:00	0.0084	--	3/15/2012 16:00	0.0080	--	3/15/2012 16:00	0.0074	--
3/15/2012 17:00	0.0086	--	3/15/2012 17:00	0.0083	--	3/15/2012 17:00	0.0088	--
3/15/2012 18:00	0.0084	--	3/15/2012 18:00	0.0080	--	3/15/2012 18:00	0.0071	--
3/15/2012 19:00	0.0084	--	3/15/2012 19:00	0.0080	--	3/15/2012 19:00	0.0070	--
3/15/2012 20:00	0.0084	--	3/15/2012 20:00	0.0080	--	3/15/2012 20:00	0.0068	--
3/15/2012 21:00	0.0085	--	3/15/2012 21:00	0.0081	--	3/15/2012 21:00	0.0069	--
3/15/2012 22:00	0.0084	--	3/15/2012 22:00	0.0080	--	3/15/2012 22:00	0.0075	--
3/15/2012 23:00	0.0084	0.0083	3/15/2012 23:00	0.0080	0.0078	3/15/2012 23:00	0.0073	0.0071
3/16/2012 0:00	0.0084	--	3/16/2012 0:00	0.0081	--	3/16/2012 0:00	0.0070	--
3/16/2012 1:00	0.0085	--	3/16/2012 1:00	0.0080	--	3/16/2012 1:00	0.0074	--
3/16/2012 2:00	0.0084	--	3/16/2012 2:00	0.0080	--	3/16/2012 2:00	0.0069	--
3/16/2012 3:00	0.0084	--	3/16/2012 3:00	0.0081	--	3/16/2012 3:00	0.0069	--
3/16/2012 4:00	0.0085	--	3/16/2012 4:00	0.0080	--	3/16/2012 4:00	0.0074	--
3/16/2012 5:00	0.0087	--	3/16/2012 5:00	0.0084	--	3/16/2012 5:00	0.0070	--
3/16/2012 6:00	0.0086	--	3/16/2012 6:00	0.0081	--	3/16/2012 6:00	0.0074	--
3/16/2012 7:00	0.0084	--	3/16/2012 7:00	0.0080	--	3/16/2012 7:00	0.0073	--
3/16/2012 8:00	0.0085	--	3/16/2012 8:00	0.0081	--	3/16/2012 8:00	0.0073	--
3/16/2012 9:00	0.0085	--	3/16/2012 9:00	0.0091	--	3/16/2012 9:00	0.0061	--
3/16/2012 10:00	0.0085	--	3/16/2012 10:00	0.0085	--	3/16/2012 10:00	0.0069	--
3/16/2012 11:00	0.0084	--	3/16/2012 11:00	0.0081	--	3/16/2012 11:00	0.0072	--
3/16/2012 12:00	0.0085	--	3/16/2012 12:00	0.0080	--	3/16/2012 12:00	0.0068	--
3/16/2012 13:00	0.0086	--	3/16/2012 13:00	0.0082	--	3/16/2012 13:00	0.0072	--
3/16/2012 14:00	0.0084	--	3/16/2012 14:00	0.0082	--	3/16/2012 14:00	0.0073	--
3/16/2012 15:00	0.0084	--	3/16/2012 15:00	0.0080	--	3/16/2012 15:00	0.0067	--
3/16/2012 16:00	0.0084	--	3/16/2012 16:00	0.0080	--	3/16/2012 16:00	0.0068	--
3/16/2012 17:00	0.0084	--	3/16/2012 17:00	0.0080	--	3/16/2012 17:00	0.0069	--
3/16/2012 18:00	0.0084	--	3/16/2012 18:00	0.0080	--	3/16/2012 18:00	0.0072	--
3/16/2012 19:00	0.0085	--	3/16/2012 19:00	0.0080	--	3/16/2012 19:00	0.0070	--
3/16/2012 20:00	0.0084	--	3/16/2012 20:00	0.0081	--	3/16/2012 20:00	0.0063	--
3/16/2012 21:00	0.0084	--	3/16/2012 21:00	0.0081	--	3/16/2012 21:00	0.0067	--
3/16/2012 22:00	0.0084	--	3/16/2012 22:00	0.0081	--	3/16/2012 22:00	0.0073	--
3/16/2012 23:00	0.0084	0.0083	3/16/2012 23:00	0.0081	0.0081	3/16/2012 23:00	0.0071	0.0070
3/17/2012 0:00	0.0084	--	3/17/2012 0:00	0.0081	--	3/17/2012 0:00	0.0071	--
3/17/2012 1:00	0.0085	--	3/17/2012 1:00	0.0081	--	3/17/2012 1:00	0.0065	--
3/17/2012 2:00	0.0083	--	3/17/2012 2:00	0.0081	--	3/17/2012 2:00	0.0080	--
3/17/2012 3:00	0.0085	--	3/17/2012 3:00	0.0081	--	3/17/2012 3:00	0.0069	--

Package Boiler No. 1 EPN 81BF01			Package Boiler No. 2 EPN 50BF02			Package Boiler No. 3 EPN 50BF03		
Date	NO_X (lb/MMBtu)	NO_X (lb/MMBtu) 30-day Rolling Average	Date	NO_X (lb/MMBtu)	NO_X (lb/MMBtu) 30-day Rolling Average	Date	NO_X (lb/MMBtu)	NO_X (lb/MMBtu) 30-day Rolling Average
3/17/2012 4:00	0.0084	--	3/17/2012 4:00	0.0081	--	3/17/2012 4:00	0.0071	--
3/17/2012 5:00	0.0088	--	3/17/2012 5:00	0.0081	--	3/17/2012 5:00	0.0079	--
3/17/2012 6:00	0.0085	--	3/17/2012 6:00	0.0081	--	3/17/2012 6:00	0.0069	--
3/17/2012 7:00	0.0085	--	3/17/2012 7:00	0.0081	--	3/17/2012 7:00	0.0073	--
3/17/2012 8:00	0.0085	--	3/17/2012 8:00	0.0084	--	3/17/2012 8:00	0.0079	--
3/17/2012 9:00	0.0083	--	3/17/2012 9:00	0.0080	--	3/17/2012 9:00	0.0072	--
3/17/2012 10:00	0.0085	--	3/17/2012 10:00	0.0081	--	3/17/2012 10:00	0.0078	--
3/17/2012 11:00	0.0084	--	3/17/2012 11:00	0.0081	--	3/17/2012 11:00	0.0075	--
3/17/2012 12:00	0.0085	--	3/17/2012 12:00	0.0081	--	3/17/2012 12:00	0.0074	--
3/17/2012 13:00	0.0085	--	3/17/2012 13:00	0.0082	--	3/17/2012 13:00	0.0074	--
3/17/2012 14:00	0.0084	--	3/17/2012 14:00	0.0080	--	3/17/2012 14:00	0.0069	--
3/17/2012 15:00	0.0084	--	3/17/2012 15:00	0.0080	--	3/17/2012 15:00	0.0071	--
3/17/2012 16:00	0.0085	--	3/17/2012 16:00	0.0080	--	3/17/2012 16:00	0.0071	--
3/17/2012 17:00	0.0084	--	3/17/2012 17:00	0.0080	--	3/17/2012 17:00	0.0069	--
3/17/2012 18:00	0.0084	--	3/17/2012 18:00	0.0080	--	3/17/2012 18:00	0.0072	--
3/17/2012 19:00	0.0084	--	3/17/2012 19:00	0.0080	--	3/17/2012 19:00	0.0069	--
3/17/2012 20:00	0.0085	--	3/17/2012 20:00	0.0081	--	3/17/2012 20:00	0.0075	--
3/17/2012 21:00	0.0085	--	3/17/2012 21:00	0.0081	--	3/17/2012 21:00	0.0072	--
3/17/2012 22:00	0.0084	--	3/17/2012 22:00	0.0081	--	3/17/2012 22:00	0.0076	--
3/17/2012 23:00	0.0085	0.0083	3/17/2012 23:00	0.0082	0.0084	3/17/2012 23:00	0.0075	0.0070
3/18/2012 0:00	0.0084	--	3/18/2012 0:00	0.0080	--	3/18/2012 0:00	0.0072	--
3/18/2012 1:00	0.0085	--	3/18/2012 1:00	0.0081	--	3/18/2012 1:00	0.0072	--
3/18/2012 2:00	0.0084	--	3/18/2012 2:00	0.0081	--	3/18/2012 2:00	0.0071	--
3/18/2012 3:00	0.0084	--	3/18/2012 3:00	0.0081	--	3/18/2012 3:00	0.0072	--
3/18/2012 4:00	0.0085	--	3/18/2012 4:00	0.0081	--	3/18/2012 4:00	0.0076	--
3/18/2012 5:00	0.0090	--	3/18/2012 5:00	0.0089	--	3/18/2012 5:00	0.0073	--
3/18/2012 6:00	0.0084	--	3/18/2012 6:00	0.0081	--	3/18/2012 6:00	0.0070	--
3/18/2012 7:00	0.0085	--	3/18/2012 7:00	0.0081	--	3/18/2012 7:00	0.0075	--
3/18/2012 8:00	0.0085	--	3/18/2012 8:00	0.0081	--	3/18/2012 8:00	0.0071	--
3/18/2012 9:00	0.0085	--	3/18/2012 9:00	0.0081	--	3/18/2012 9:00	0.0074	--
3/18/2012 10:00	0.0086	--	3/18/2012 10:00	0.0082	--	3/18/2012 10:00	0.0076	--
3/18/2012 11:00	0.0085	--	3/18/2012 11:00	0.0081	--	3/18/2012 11:00	0.0064	--
3/18/2012 12:00	0.0085	--	3/18/2012 12:00	0.0081	--	3/18/2012 12:00	0.0073	--
3/18/2012 13:00	0.0084	--	3/18/2012 13:00	0.0081	--	3/18/2012 13:00	0.0073	--
3/18/2012 14:00	0.0084	--	3/18/2012 14:00	0.0081	--	3/18/2012 14:00	0.0071	--
3/18/2012 15:00	0.0084	--	3/18/2012 15:00	0.0080	--	3/18/2012 15:00	0.0073	--
3/18/2012 16:00	0.0084	--	3/18/2012 16:00	0.0080	--	3/18/2012 16:00	0.0077	--
3/18/2012 17:00	0.0085	--	3/18/2012 17:00	0.0080	--	3/18/2012 17:00	0.0071	--
3/18/2012 18:00	0.0084	--	3/18/2012 18:00	0.0081	--	3/18/2012 18:00	0.0077	--
3/18/2012 19:00	0.0081	--	3/18/2012 19:00	0.0080	--	3/18/2012 19:00	0.0073	--
3/18/2012 20:00	0.0082	--	3/18/2012 20:00	0.0081	--	3/18/2012 20:00	0.0070	--

Package Boiler No. 1 EPN 81BF01			Package Boiler No. 2 EPN 50BF02			Package Boiler No. 3 EPN 50BF03		
Date	NO_X (lb/MMBtu)	NO_X (lb/MMBtu) 30-day Rolling Average	Date	NO_X (lb/MMBtu)	NO_X (lb/MMBtu) 30-day Rolling Average	Date	NO_X (lb/MMBtu)	NO_X (lb/MMBtu) 30-day Rolling Average
3/18/2012 21:00	0.0081	--	3/18/2012 21:00	0.0081	--	3/18/2012 21:00	0.0073	--
3/18/2012 22:00	0.0082	--	3/18/2012 22:00	0.0081	--	3/18/2012 22:00	0.0077	--
3/18/2012 23:00	0.0082	0.0083	3/18/2012 23:00	0.0081	0.0086	3/18/2012 23:00	0.0071	0.0070
3/19/2012 0:00	0.0081	--	3/19/2012 0:00	0.0081	--	3/19/2012 0:00	0.0073	--
3/19/2012 1:00	0.0081	--	3/19/2012 1:00	0.0081	--	3/19/2012 1:00	0.0075	--
3/19/2012 2:00	0.0082	--	3/19/2012 2:00	0.0081	--	3/19/2012 2:00	0.0073	--
3/19/2012 3:00	0.0081	--	3/19/2012 3:00	0.0080	--	3/19/2012 3:00	0.0074	--
3/19/2012 4:00	0.0081	--	3/19/2012 4:00	0.0081	--	3/19/2012 4:00	0.0069	--
3/19/2012 5:00	0.0083	--	3/19/2012 5:00	0.0081	--	3/19/2012 5:00	0.0076	--
3/19/2012 6:00	0.0081	--	3/19/2012 6:00	0.0090	--	3/19/2012 6:00	0.0075	--
3/19/2012 7:00	0.0081	--	3/19/2012 7:00	0.0073	--	3/19/2012 7:00	0.0073	--
3/19/2012 8:00	0.0082	--	3/19/2012 8:00	0.0082	--	3/19/2012 8:00	0.0078	--
3/19/2012 9:00	0.0082	--	3/19/2012 9:00	0.0082	--	3/19/2012 9:00	0.0071	--
3/19/2012 10:00	0.0083	--	3/19/2012 10:00	0.0083	--	3/19/2012 10:00	0.0074	--
3/19/2012 11:00	0.0081	--	3/19/2012 11:00	0.0082	--	3/19/2012 11:00	0.0073	--
3/19/2012 12:00	0.0081	--	3/19/2012 12:00	0.0081	--	3/19/2012 12:00	0.0070	--
3/19/2012 13:00	0.0081	--	3/19/2012 13:00	0.0082	--	3/19/2012 13:00	0.0075	--
3/19/2012 14:00	0.0082	--	3/19/2012 14:00	0.0082	--	3/19/2012 14:00	0.0069	--
3/19/2012 15:00	0.0080	--	3/19/2012 15:00	0.0082	--	3/19/2012 15:00	0.0074	--
3/19/2012 16:00	0.0079	--	3/19/2012 16:00	0.0081	--	3/19/2012 16:00	0.0069	--
3/19/2012 17:00	0.0082	--	3/19/2012 17:00	0.0083	--	3/19/2012 17:00	0.0076	--
3/19/2012 18:00	0.0082	--	3/19/2012 18:00	0.0081	--	3/19/2012 18:00	0.0069	--
3/19/2012 19:00	0.0081	--	3/19/2012 19:00	0.0082	--	3/19/2012 19:00	0.0073	--
3/19/2012 20:00	0.0082	--	3/19/2012 20:00	0.0082	--	3/19/2012 20:00	0.0078	--
3/19/2012 21:00	0.0081	--	3/19/2012 21:00	0.0081	--	3/19/2012 21:00	0.0073	--
3/19/2012 22:00	0.0082	--	3/19/2012 22:00	0.0082	--	3/19/2012 22:00	0.0076	--
3/19/2012 23:00	0.0081	0.0083	3/19/2012 23:00	0.0082	0.0089	3/19/2012 23:00	0.0073	0.0070
3/20/2012 0:00	0.0082	--	3/20/2012 0:00	0.0082	--	3/20/2012 0:00	0.0072	--
3/20/2012 1:00	0.0083	--	3/20/2012 1:00	0.0084	--	3/20/2012 1:00	0.0072	--
3/20/2012 2:00	0.0081	--	3/20/2012 2:00	0.0002	--	3/20/2012 2:00	0.0072	--
3/20/2012 3:00	0.0081	--	3/20/2012 3:00	SOURCE DOWN	--	3/20/2012 3:00	0.0071	--
3/20/2012 4:00	0.0081	--	3/20/2012 4:00	SOURCE DOWN	--	3/20/2012 4:00	0.0075	--
3/20/2012 5:00	0.0087	--	3/20/2012 5:00	SOURCE DOWN	--	3/20/2012 5:00	0.0074	--
3/20/2012 6:00	0.0082	--	3/20/2012 6:00	DOWNTIME	--	3/20/2012 6:00	0.0063	--
3/20/2012 7:00	0.0078	--	3/20/2012 7:00	DOWNTIME	--	3/20/2012 7:00	0.0071	--
3/20/2012 8:00	0.0082	--	3/20/2012 8:00	DOWNTIME	--	3/20/2012 8:00	0.0071	--
3/20/2012 9:00	0.0083	--	3/20/2012 9:00	DOWNTIME	--	3/20/2012 9:00	0.0065	--
3/20/2012 10:00	0.0082	--	3/20/2012 10:00	DOWNTIME	--	3/20/2012 10:00	0.0075	--
3/20/2012 11:00	0.0082	--	3/20/2012 11:00	DOWNTIME	--	3/20/2012 11:00	0.0074	--
3/20/2012 12:00	0.0082	--	3/20/2012 12:00	DOWNTIME	--	3/20/2012 12:00	0.0073	--
3/20/2012 13:00	0.0083	--	3/20/2012 13:00	DOWNTIME	--	3/20/2012 13:00	0.0073	--

Package Boiler No. 1 EPN 81BF01			Package Boiler No. 2 EPN 50BF02			Package Boiler No. 3 EPN 50BF03		
Date	NO_X (lb/MMBtu)	NO_X (lb/MMBtu) 30-day Rolling Average	Date	NO_X (lb/MMBtu)	NO_X (lb/MMBtu) 30-day Rolling Average	Date	NO_X (lb/MMBtu)	NO_X (lb/MMBtu) 30-day Rolling Average
3/20/2012 14:00	0.0082	--	3/20/2012 14:00	DOWNTIME	--	3/20/2012 14:00	0.0072	--
3/20/2012 15:00	0.0082	--	3/20/2012 15:00	DOWNTIME	--	3/20/2012 15:00	0.0073	--
3/20/2012 16:00	0.0081	--	3/20/2012 16:00	DOWNTIME	--	3/20/2012 16:00	0.0073	--
3/20/2012 17:00	0.0082	--	3/20/2012 17:00	DOWNTIME	--	3/20/2012 17:00	0.0073	--
3/20/2012 18:00	0.0081	--	3/20/2012 18:00	DOWNTIME	--	3/20/2012 18:00	0.0072	--
3/20/2012 19:00	0.0081	--	3/20/2012 19:00	DOWNTIME	--	3/20/2012 19:00	0.0073	--
3/20/2012 20:00	0.0082	--	3/20/2012 20:00	DOWNTIME	--	3/20/2012 20:00	0.0073	--
3/20/2012 21:00	0.0082	--	3/20/2012 21:00	DOWNTIME	--	3/20/2012 21:00	0.0073	--
3/20/2012 22:00	0.0082	--	3/20/2012 22:00	DOWNTIME	--	3/20/2012 22:00	0.0075	--
3/20/2012 23:00	0.0082	0.0083	3/20/2012 23:00	DOWNTIME	0.0092	3/20/2012 23:00	0.0073	0.0070
3/21/2012 0:00	0.0081	--	3/21/2012 0:00	DOWNTIME	--	3/21/2012 0:00	0.0074	--
3/21/2012 1:00	0.0081	--	3/21/2012 1:00	DOWNTIME	--	3/21/2012 1:00	0.0072	--
3/21/2012 2:00	0.0081	--	3/21/2012 2:00	DOWNTIME	--	3/21/2012 2:00	0.0073	--
3/21/2012 3:00	0.0083	--	3/21/2012 3:00	DOWNTIME	--	3/21/2012 3:00	0.0076	--
3/21/2012 4:00	0.0081	--	3/21/2012 4:00	DOWNTIME	--	3/21/2012 4:00	0.0072	--
3/21/2012 5:00	0.0084	--	3/21/2012 5:00	DOWNTIME	--	3/21/2012 5:00	0.0081	--
3/21/2012 6:00	0.0082	--	3/21/2012 6:00	DOWNTIME	--	3/21/2012 6:00	0.0073	--
3/21/2012 7:00	0.0081	--	3/21/2012 7:00	0.0081	--	3/21/2012 7:00	0.0068	--
3/21/2012 8:00	0.0081	--	3/21/2012 8:00	0.0082	--	3/21/2012 8:00	0.0074	--
3/21/2012 9:00	0.0077	--	3/21/2012 9:00	0.0076	--	3/21/2012 9:00	0.0059	--
3/21/2012 10:00	0.0081	--	3/21/2012 10:00	0.0086	--	3/21/2012 10:00	0.0071	--
3/21/2012 11:00	0.0082	--	3/21/2012 11:00	0.0083	--	3/21/2012 11:00	0.0072	--
3/21/2012 12:00	0.0083	--	3/21/2012 12:00	0.0086	--	3/21/2012 12:00	0.0074	--
3/21/2012 13:00	0.0082	--	3/21/2012 13:00	0.0079	--	3/21/2012 13:00	0.0072	--
3/21/2012 14:00	0.0081	--	3/21/2012 14:00	0.0083	--	3/21/2012 14:00	0.0071	--
3/21/2012 15:00	0.0080	--	3/21/2012 15:00	0.0080	--	3/21/2012 15:00	0.0070	--
3/21/2012 16:00	0.0082	--	3/21/2012 16:00	0.0083	--	3/21/2012 16:00	0.0074	--
3/21/2012 17:00	0.0081	--	3/21/2012 17:00	0.0078	--	3/21/2012 17:00	0.0071	--
3/21/2012 18:00	0.0081	--	3/21/2012 18:00	0.0078	--	3/21/2012 18:00	0.0071	--
3/21/2012 19:00	0.0080	--	3/21/2012 19:00	0.0077	--	3/21/2012 19:00	0.0070	--
3/21/2012 20:00	0.0082	--	3/21/2012 20:00	0.0086	--	3/21/2012 20:00	0.0073	--
3/21/2012 21:00	0.0080	--	3/21/2012 21:00	0.0080	--	3/21/2012 21:00	0.0072	--
3/21/2012 22:00	0.0081	--	3/21/2012 22:00	0.0078	--	3/21/2012 22:00	0.0072	--
3/21/2012 23:00	0.0081	0.0083	3/21/2012 23:00	0.0082	0.0094	3/21/2012 23:00	0.0072	0.0070
3/22/2012 0:00	0.0081	--	3/22/2012 0:00	0.0082	--	3/22/2012 0:00	0.0072	--
3/22/2012 1:00	0.0081	--	3/22/2012 1:00	0.0082	--	3/22/2012 1:00	0.0072	--
3/22/2012 2:00	0.0080	--	3/22/2012 2:00	0.0081	--	3/22/2012 2:00	0.0072	--
3/22/2012 3:00	0.0081	--	3/22/2012 3:00	0.0082	--	3/22/2012 3:00	0.0072	--
3/22/2012 4:00	0.0081	--	3/22/2012 4:00	0.0080	--	3/22/2012 4:00	0.0072	--
3/22/2012 5:00	0.0087	--	3/22/2012 5:00	0.0072	--	3/22/2012 5:00	0.0072	--
3/22/2012 6:00	0.0081	--	3/22/2012 6:00	0.0077	--	3/22/2012 6:00	0.0072	--

Package Boiler No. 1 EPN 81BF01			Package Boiler No. 2 EPN 50BF02			Package Boiler No. 3 EPN 50BF03		
Date	NO_X (lb/MMBtu)	NO_X (lb/MMBtu) 30-day Rolling Average	Date	NO_X (lb/MMBtu)	NO_X (lb/MMBtu) 30-day Rolling Average	Date	NO_X (lb/MMBtu)	NO_X (lb/MMBtu) 30-day Rolling Average
3/22/2012 7:00	0.0082	--	3/22/2012 7:00	0.0081	--	3/22/2012 7:00	0.0072	--
3/22/2012 8:00	0.0081	--	3/22/2012 8:00	0.0087	--	3/22/2012 8:00	0.0070	--
3/22/2012 9:00	0.1108	--	3/22/2012 9:00	0.0083	--	3/22/2012 9:00	0.0076	--
3/22/2012 10:00	DOWNTIME	--	3/22/2012 10:00	0.0082	--	3/22/2012 10:00	0.0072	--
3/22/2012 11:00	0.0081	--	3/22/2012 11:00	0.0804	--	3/22/2012 11:00	0.0074	--
3/22/2012 12:00	0.0082	--	3/22/2012 12:00	0.0482	--	3/22/2012 12:00	0.1177	--
3/22/2012 13:00	0.0081	--	3/22/2012 13:00	0.0111	--	3/22/2012 13:00	DOWNTIME	--
3/22/2012 14:00	0.0080	--	3/22/2012 14:00	0.0091	--	3/22/2012 14:00	0.0071	--
3/22/2012 15:00	0.0081	--	3/22/2012 15:00	0.0084	--	3/22/2012 15:00	0.0073	--
3/22/2012 16:00	0.0081	--	3/22/2012 16:00	0.0061	--	3/22/2012 16:00	0.0073	--
3/22/2012 17:00	0.0081	--	3/22/2012 17:00	0.0057	--	3/22/2012 17:00	0.0072	--
3/22/2012 18:00	0.0080	--	3/22/2012 18:00	0.0097	--	3/22/2012 18:00	0.0072	--
3/22/2012 19:00	0.0080	--	3/22/2012 19:00	0.0140	--	3/22/2012 19:00	0.0071	--
3/22/2012 20:00	0.0081	--	3/22/2012 20:00	0.0121	--	3/22/2012 20:00	0.0072	--
3/22/2012 21:00	0.0082	--	3/22/2012 21:00	0.0138	--	3/22/2012 21:00	0.0075	--
3/22/2012 22:00	0.0080	--	3/22/2012 22:00	0.0100	--	3/22/2012 22:00	0.0071	--
3/22/2012 23:00	0.0081	0.0084	3/22/2012 23:00	0.0089	0.0099	3/22/2012 23:00	0.0072	0.0072
3/23/2012 0:00	0.0081	--	3/23/2012 0:00	0.0083	--	3/23/2012 0:00	0.0072	--
3/23/2012 1:00	0.0081	--	3/23/2012 1:00	0.0072	--	3/23/2012 1:00	0.0072	--
3/23/2012 2:00	0.0081	--	3/23/2012 2:00	0.0033	--	3/23/2012 2:00	0.0074	--
3/23/2012 3:00	0.0082	--	3/23/2012 3:00	0.0047	--	3/23/2012 3:00	0.0073	--
3/23/2012 4:00	0.0082	--	3/23/2012 4:00	0.0080	--	3/23/2012 4:00	0.0072	--
3/23/2012 5:00	0.0083	--	3/23/2012 5:00	0.0085	--	3/23/2012 5:00	0.0075	--
3/23/2012 6:00	0.0081	--	3/23/2012 6:00	0.0082	--	3/23/2012 6:00	0.0068	--
3/23/2012 7:00	0.0082	--	3/23/2012 7:00	0.0082	--	3/23/2012 7:00	0.0073	--
3/23/2012 8:00	0.0081	--	3/23/2012 8:00	0.0084	--	3/23/2012 8:00	0.0071	--
3/23/2012 9:00	0.0081	--	3/23/2012 9:00	0.0082	--	3/23/2012 9:00	0.0071	--
3/23/2012 10:00	0.0082	--	3/23/2012 10:00	0.0084	--	3/23/2012 10:00	0.0072	--
3/23/2012 11:00	0.0082	--	3/23/2012 11:00	0.0081	--	3/23/2012 11:00	0.0074	--
3/23/2012 12:00	0.0081	--	3/23/2012 12:00	0.0081	--	3/23/2012 12:00	0.0077	--
3/23/2012 13:00	0.0081	--	3/23/2012 13:00	0.0083	--	3/23/2012 13:00	0.0069	--
3/23/2012 14:00	0.0080	--	3/23/2012 14:00	0.0081	--	3/23/2012 14:00	0.0071	--
3/23/2012 15:00	0.0081	--	3/23/2012 15:00	0.0079	--	3/23/2012 15:00	0.0072	--
3/23/2012 16:00	0.0080	--	3/23/2012 16:00	0.0081	--	3/23/2012 16:00	0.0070	--
3/23/2012 17:00	0.0081	--	3/23/2012 17:00	0.0082	--	3/23/2012 17:00	0.0072	--
3/23/2012 18:00	0.0079	--	3/23/2012 18:00	0.0079	--	3/23/2012 18:00	0.0069	--
3/23/2012 19:00	0.0081	--	3/23/2012 19:00	0.0080	--	3/23/2012 19:00	0.0072	--
3/23/2012 20:00	0.0081	--	3/23/2012 20:00	0.0081	--	3/23/2012 20:00	0.0074	--
3/23/2012 21:00	0.0081	--	3/23/2012 21:00	0.0080	--	3/23/2012 21:00	0.0073	--
3/23/2012 22:00	0.0082	--	3/23/2012 22:00	0.0080	--	3/23/2012 22:00	0.0074	--
3/23/2012 23:00	0.0081	0.0084	3/23/2012 23:00	0.0080	0.0102	3/23/2012 23:00	0.0072	0.0072

Package Boiler No. 1 EPN 81BF01			Package Boiler No. 2 EPN 50BF02			Package Boiler No. 3 EPN 50BF03		
Date	NO_X (lb/MMBtu)	NO_X (lb/MMBtu) 30-day Rolling Average	Date	NO_X (lb/MMBtu)	NO_X (lb/MMBtu) 30-day Rolling Average	Date	NO_X (lb/MMBtu)	NO_X (lb/MMBtu) 30-day Rolling Average
3/24/2012 0:00	0.0081	--	3/24/2012 0:00	0.0081	--	3/24/2012 0:00	0.0072	--
3/24/2012 1:00	0.0081	--	3/24/2012 1:00	0.0076	--	3/24/2012 1:00	0.0073	--
3/24/2012 2:00	0.0081	--	3/24/2012 2:00	0.0081	--	3/24/2012 2:00	0.0072	--
3/24/2012 3:00	0.0081	--	3/24/2012 3:00	0.0080	--	3/24/2012 3:00	0.0071	--
3/24/2012 4:00	0.0081	--	3/24/2012 4:00	0.0081	--	3/24/2012 4:00	0.0073	--
3/24/2012 5:00	0.0084	--	3/24/2012 5:00	0.0082	--	3/24/2012 5:00	0.0082	--
3/24/2012 6:00	0.0082	--	3/24/2012 6:00	0.0082	--	3/24/2012 6:00	0.0073	--
3/24/2012 7:00	0.0081	--	3/24/2012 7:00	0.0081	--	3/24/2012 7:00	0.0074	--
3/24/2012 8:00	0.0082	--	3/24/2012 8:00	0.0081	--	3/24/2012 8:00	0.0071	--
3/24/2012 9:00	0.0082	--	3/24/2012 9:00	0.0086	--	3/24/2012 9:00	0.0071	--
3/24/2012 10:00	0.0082	--	3/24/2012 10:00	0.0083	--	3/24/2012 10:00	0.0074	--
3/24/2012 11:00	0.0082	--	3/24/2012 11:00	0.0082	--	3/24/2012 11:00	0.0074	--
3/24/2012 12:00	0.0082	--	3/24/2012 12:00	0.0083	--	3/24/2012 12:00	0.0074	--
3/24/2012 13:00	0.0082	--	3/24/2012 13:00	0.0082	--	3/24/2012 13:00	0.0073	--
3/24/2012 14:00	0.0081	--	3/24/2012 14:00	0.0082	--	3/24/2012 14:00	0.0073	--
3/24/2012 15:00	0.0081	--	3/24/2012 15:00	0.0079	--	3/24/2012 15:00	0.0071	--
3/24/2012 16:00	0.0081	--	3/24/2012 16:00	0.0080	--	3/24/2012 16:00	0.0073	--
3/24/2012 17:00	0.0081	--	3/24/2012 17:00	0.0082	--	3/24/2012 17:00	0.0072	--
3/24/2012 18:00	0.0080	--	3/24/2012 18:00	0.0081	--	3/24/2012 18:00	0.0071	--
3/24/2012 19:00	0.0080	--	3/24/2012 19:00	0.0077	--	3/24/2012 19:00	0.0070	--
3/24/2012 20:00	0.0082	--	3/24/2012 20:00	0.0081	--	3/24/2012 20:00	0.0074	--
3/24/2012 21:00	0.0081	--	3/24/2012 21:00	0.0080	--	3/24/2012 21:00	0.0072	--
3/24/2012 22:00	0.0081	--	3/24/2012 22:00	0.0080	--	3/24/2012 22:00	0.0072	--
3/24/2012 23:00	0.0081	0.0083	3/24/2012 23:00	0.0081	0.0105	3/24/2012 23:00	0.0072	0.0072
3/25/2012 0:00	0.0082	--	3/25/2012 0:00	0.0083	--	3/25/2012 0:00	0.0073	--
3/25/2012 1:00	0.0081	--	3/25/2012 1:00	0.0081	--	3/25/2012 1:00	0.0072	--
3/25/2012 2:00	0.0081	--	3/25/2012 2:00	0.0082	--	3/25/2012 2:00	0.0072	--
3/25/2012 3:00	0.0082	--	3/25/2012 3:00	0.0080	--	3/25/2012 3:00	0.0073	--
3/25/2012 4:00	0.0081	--	3/25/2012 4:00	0.0081	--	3/25/2012 4:00	0.0073	--
3/25/2012 5:00	0.0087	--	3/25/2012 5:00	0.0079	--	3/25/2012 5:00	0.0075	--
3/25/2012 6:00	0.0076	--	3/25/2012 6:00	0.0082	--	3/25/2012 6:00	0.0073	--
3/25/2012 7:00	0.0081	--	3/25/2012 7:00	0.0082	--	3/25/2012 7:00	0.0072	--
3/25/2012 8:00	0.0082	--	3/25/2012 8:00	0.0082	--	3/25/2012 8:00	0.0071	--
3/25/2012 9:00	0.0081	--	3/25/2012 9:00	0.0085	--	3/25/2012 9:00	0.0072	--
3/25/2012 10:00	0.0083	--	3/25/2012 10:00	0.0084	--	3/25/2012 10:00	0.0074	--
3/25/2012 11:00	0.0082	--	3/25/2012 11:00	0.0081	--	3/25/2012 11:00	0.0073	--
3/25/2012 12:00	0.0082	--	3/25/2012 12:00	0.0080	--	3/25/2012 12:00	0.0074	--
3/25/2012 13:00	0.0082	--	3/25/2012 13:00	0.0082	--	3/25/2012 13:00	0.0074	--
3/25/2012 14:00	0.0082	--	3/25/2012 14:00	0.0080	--	3/25/2012 14:00	0.0073	--
3/25/2012 15:00	0.0082	--	3/25/2012 15:00	0.0083	--	3/25/2012 15:00	0.0072	--
3/25/2012 16:00	0.0081	--	3/25/2012 16:00	0.0081	--	3/25/2012 16:00	0.0072	--

Package Boiler No. 1 EPN 81BF01			Package Boiler No. 2 EPN 50BF02			Package Boiler No. 3 EPN 50BF03		
Date	NO_X (lb/MMBtu)	NO_X (lb/MMBtu) 30-day Rolling Average	Date	NO_X (lb/MMBtu)	NO_X (lb/MMBtu) 30-day Rolling Average	Date	NO_X (lb/MMBtu)	NO_X (lb/MMBtu) 30-day Rolling Average
3/25/2012 17:00	0.0081	--	3/25/2012 17:00	0.0080	--	3/25/2012 17:00	0.0072	--
3/25/2012 18:00	0.0080	--	3/25/2012 18:00	0.0080	--	3/25/2012 18:00	0.0070	--
3/25/2012 19:00	0.0082	--	3/25/2012 19:00	0.0082	--	3/25/2012 19:00	0.0073	--
3/25/2012 20:00	0.0082	--	3/25/2012 20:00	0.0082	--	3/25/2012 20:00	0.0074	--
3/25/2012 21:00	0.0081	--	3/25/2012 21:00	0.0079	--	3/25/2012 21:00	0.0073	--
3/25/2012 22:00	0.0081	--	3/25/2012 22:00	0.0079	--	3/25/2012 22:00	0.0071	--
3/25/2012 23:00	0.0081	0.0083	3/25/2012 23:00	0.0080	0.0100	3/25/2012 23:00	0.0072	0.0072
3/26/2012 0:00	0.0081	--	3/26/2012 0:00	0.0080	--	3/26/2012 0:00	0.0072	--
3/26/2012 1:00	0.0082	--	3/26/2012 1:00	0.0082	--	3/26/2012 1:00	0.0073	--
3/26/2012 2:00	0.0081	--	3/26/2012 2:00	0.0081	--	3/26/2012 2:00	0.0072	--
3/26/2012 3:00	0.0081	--	3/26/2012 3:00	0.0081	--	3/26/2012 3:00	0.0072	--
3/26/2012 4:00	0.0081	--	3/26/2012 4:00	0.0082	--	3/26/2012 4:00	0.0072	--
3/26/2012 5:00	0.0082	--	3/26/2012 5:00	0.0071	--	3/26/2012 5:00	0.0075	--
3/26/2012 6:00	DOWNTIME	--	3/26/2012 6:00	0.0084	--	3/26/2012 6:00	0.0073	--
3/26/2012 7:00	DOWNTIME	--	3/26/2012 7:00	0.0084	--	3/26/2012 7:00	0.0071	--
3/26/2012 8:00	DOWNTIME	--	3/26/2012 8:00	0.0086	--	3/26/2012 8:00	0.0072	--
3/26/2012 9:00	0.0082	--	3/26/2012 9:00	DOWNTIME	--	3/26/2012 9:00	0.0072	--
3/26/2012 10:00	0.0082	--	3/26/2012 10:00	DOWNTIME	--	3/26/2012 10:00	0.0074	--
3/26/2012 11:00	0.0081	--	3/26/2012 11:00	0.0078	--	3/26/2012 11:00	0.0073	--
3/26/2012 12:00	0.0081	--	3/26/2012 12:00	0.0079	--	3/26/2012 12:00	0.0072	--
3/26/2012 13:00	0.0081	--	3/26/2012 13:00	0.0080	--	3/26/2012 13:00	0.0073	--
3/26/2012 14:00	0.0081	--	3/26/2012 14:00	0.0077	--	3/26/2012 14:00	0.0073	--
3/26/2012 15:00	0.0081	--	3/26/2012 15:00	0.0073	--	3/26/2012 15:00	0.0071	--
3/26/2012 16:00	0.0081	--	3/26/2012 16:00	0.0081	--	3/26/2012 16:00	0.0072	--
3/26/2012 17:00	0.0081	--	3/26/2012 17:00	0.0078	--	3/26/2012 17:00	0.0071	--
3/26/2012 18:00	0.0082	--	3/26/2012 18:00	0.0078	--	3/26/2012 18:00	0.0072	--
3/26/2012 19:00	0.0081	--	3/26/2012 19:00	0.0075	--	3/26/2012 19:00	0.0072	--
3/26/2012 20:00	0.0081	--	3/26/2012 20:00	0.0077	--	3/26/2012 20:00	0.0071	--
3/26/2012 21:00	0.0081	--	3/26/2012 21:00	0.0074	--	3/26/2012 21:00	0.0072	--
3/26/2012 22:00	0.0082	--	3/26/2012 22:00	0.0078	--	3/26/2012 22:00	0.0074	--
3/26/2012 23:00	0.0081	0.0083	3/26/2012 23:00	0.0081	0.0088	3/26/2012 23:00	0.0072	0.0072
3/27/2012 0:00	0.0080	--	3/27/2012 0:00	0.0083	--	3/27/2012 0:00	0.0071	--
3/27/2012 1:00	0.0082	--	3/27/2012 1:00	0.0075	--	3/27/2012 1:00	0.0073	--
3/27/2012 2:00	0.0081	--	3/27/2012 2:00	0.0079	--	3/27/2012 2:00	0.0073	--
3/27/2012 3:00	0.0081	--	3/27/2012 3:00	0.0079	--	3/27/2012 3:00	0.0072	--
3/27/2012 4:00	0.0081	--	3/27/2012 4:00	0.0078	--	3/27/2012 4:00	0.0073	--
3/27/2012 5:00	0.0083	--	3/27/2012 5:00	0.0093	--	3/27/2012 5:00	0.0070	--
3/27/2012 6:00	0.0080	--	3/27/2012 6:00	0.0083	--	3/27/2012 6:00	0.0072	--
3/27/2012 7:00	0.0079	--	3/27/2012 7:00	0.0080	--	3/27/2012 7:00	0.0073	--
3/27/2012 8:00	DOWNTIME	--	3/27/2012 8:00	0.0086	--	3/27/2012 8:00	0.0072	--
3/27/2012 9:00	DOWNTIME	--	3/27/2012 9:00	0.0083	--	3/27/2012 9:00	0.0073	--

Package Boiler No. 1 EPN 81BF01			Package Boiler No. 2 EPN 50BF02			Package Boiler No. 3 EPN 50BF03		
Date	NO_X (lb/MMBtu)	NO_X (lb/MMBtu) 30-day Rolling Average	Date	NO_X (lb/MMBtu)	NO_X (lb/MMBtu) 30-day Rolling Average	Date	NO_X (lb/MMBtu)	NO_X (lb/MMBtu) 30-day Rolling Average
3/27/2012 10:00	0.0080	--	3/27/2012 10:00	0.0081	--	3/27/2012 10:00	0.0073	--
3/27/2012 11:00	0.0080	--	3/27/2012 11:00	0.0079	--	3/27/2012 11:00	0.0074	--
3/27/2012 12:00	0.0080	--	3/27/2012 12:00	0.0078	--	3/27/2012 12:00	0.0072	--
3/27/2012 13:00	0.0080	--	3/27/2012 13:00	0.0076	--	3/27/2012 13:00	0.0073	--
3/27/2012 14:00	0.0079	--	3/27/2012 14:00	0.0081	--	3/27/2012 14:00	0.0073	--
3/27/2012 15:00	0.0080	--	3/27/2012 15:00	0.0081	--	3/27/2012 15:00	0.0071	--
3/27/2012 16:00	0.0079	--	3/27/2012 16:00	0.0080	--	3/27/2012 16:00	0.0072	--
3/27/2012 17:00	0.0079	--	3/27/2012 17:00	0.0080	--	3/27/2012 17:00	0.0072	--
3/27/2012 18:00	0.0079	--	3/27/2012 18:00	0.0077	--	3/27/2012 18:00	0.0071	--
3/27/2012 19:00	0.0079	--	3/27/2012 19:00	0.0077	--	3/27/2012 19:00	0.0072	--
3/27/2012 20:00	0.0079	--	3/27/2012 20:00	0.0078	--	3/27/2012 20:00	0.0072	--
3/27/2012 21:00	0.0079	--	3/27/2012 21:00	0.0080	--	3/27/2012 21:00	0.0072	--
3/27/2012 22:00	0.0080	--	3/27/2012 22:00	0.0080	--	3/27/2012 22:00	0.0072	--
3/27/2012 23:00	0.0080	0.0083	3/27/2012 23:00	0.0079	0.0091	3/27/2012 23:00	0.0073	0.0072
3/28/2012 0:00	0.0079	--	3/28/2012 0:00	0.0081	--	3/28/2012 0:00	0.0072	--
3/28/2012 1:00	0.0080	--	3/28/2012 1:00	0.0077	--	3/28/2012 1:00	0.0072	--
3/28/2012 2:00	0.0080	--	3/28/2012 2:00	0.0079	--	3/28/2012 2:00	0.0073	--
3/28/2012 3:00	0.0080	--	3/28/2012 3:00	0.0080	--	3/28/2012 3:00	0.0072	--
3/28/2012 4:00	0.0080	--	3/28/2012 4:00	0.0078	--	3/28/2012 4:00	0.0072	--
3/28/2012 5:00	0.0082	--	3/28/2012 5:00	0.0085	--	3/28/2012 5:00	0.0074	--
3/28/2012 6:00	0.0080	--	3/28/2012 6:00	0.0079	--	3/28/2012 6:00	0.0073	--
3/28/2012 7:00	0.0080	--	3/28/2012 7:00	0.0077	--	3/28/2012 7:00	0.0079	--
3/28/2012 8:00	0.0080	--	3/28/2012 8:00	0.0082	--	3/28/2012 8:00	0.0067	--
3/28/2012 9:00	0.0081	--	3/28/2012 9:00	0.0082	--	3/28/2012 9:00	0.0077	--
3/28/2012 10:00	0.0080	--	3/28/2012 10:00	0.0080	--	3/28/2012 10:00	0.0073	--
3/28/2012 11:00	0.0080	--	3/28/2012 11:00	0.0080	--	3/28/2012 11:00	0.0076	--
3/28/2012 12:00	0.0080	--	3/28/2012 12:00	0.0080	--	3/28/2012 12:00	0.0077	--
3/28/2012 13:00	0.0079	--	3/28/2012 13:00	0.0079	--	3/28/2012 13:00	0.0068	--
3/28/2012 14:00	0.0079	--	3/28/2012 14:00	0.0078	--	3/28/2012 14:00	0.0076	--
3/28/2012 15:00	0.0080	--	3/28/2012 15:00	0.0079	--	3/28/2012 15:00	0.0072	--
3/28/2012 16:00	0.0080	--	3/28/2012 16:00	0.0079	--	3/28/2012 16:00	0.0071	--
3/28/2012 17:00	0.0080	--	3/28/2012 17:00	0.0080	--	3/28/2012 17:00	0.0073	--
3/28/2012 18:00	0.0079	--	3/28/2012 18:00	0.0079	--	3/28/2012 18:00	0.0073	--
3/28/2012 19:00	0.0080	--	3/28/2012 19:00	0.0080	--	3/28/2012 19:00	0.0072	--
3/28/2012 20:00	0.0080	--	3/28/2012 20:00	0.0080	--	3/28/2012 20:00	0.0071	--
3/28/2012 21:00	0.0080	--	3/28/2012 21:00	0.0080	--	3/28/2012 21:00	0.0072	--
3/28/2012 22:00	0.0080	--	3/28/2012 22:00	0.0080	--	3/28/2012 22:00	0.0070	--
3/28/2012 23:00	0.0079	0.0083	3/28/2012 23:00	0.0080	0.0094	3/28/2012 23:00	0.0077	0.0071
3/29/2012 0:00	0.0080	--	3/29/2012 0:00	0.0080	--	3/29/2012 0:00	0.0074	--
3/29/2012 1:00	0.0081	--	3/29/2012 1:00	0.0079	--	3/29/2012 1:00	0.0071	--
3/29/2012 2:00	0.0081	--	3/29/2012 2:00	0.0080	--	3/29/2012 2:00	0.0072	--

Package Boiler No. 1 EPN 81BF01			Package Boiler No. 2 EPN 50BF02			Package Boiler No. 3 EPN 50BF03		
Date	NO_X (lb/MMBtu)	NO_X (lb/MMBtu) 30-day Rolling Average	Date	NO_X (lb/MMBtu)	NO_X (lb/MMBtu) 30-day Rolling Average	Date	NO_X (lb/MMBtu)	NO_X (lb/MMBtu) 30-day Rolling Average
3/29/2012 3:00	0.0081	--	3/29/2012 3:00	0.0079	--	3/29/2012 3:00	0.0075	--
3/29/2012 4:00	0.0081	--	3/29/2012 4:00	0.0080	--	3/29/2012 4:00	0.0072	--
3/29/2012 5:00	0.0084	--	3/29/2012 5:00	0.0082	--	3/29/2012 5:00	0.0075	--
3/29/2012 6:00	0.0082	--	3/29/2012 6:00	0.0080	--	3/29/2012 6:00	0.0073	--
3/29/2012 7:00	0.0080	--	3/29/2012 7:00	0.0080	--	3/29/2012 7:00	0.0068	--
3/29/2012 8:00	0.0082	--	3/29/2012 8:00	0.0080	--	3/29/2012 8:00	0.0075	--
3/29/2012 9:00	0.0081	--	3/29/2012 9:00	0.0080	--	3/29/2012 9:00	0.0074	--
3/29/2012 10:00	0.0083	--	3/29/2012 10:00	0.0083	--	3/29/2012 10:00	0.0076	--
3/29/2012 11:00	0.0080	--	3/29/2012 11:00	0.0078	--	3/29/2012 11:00	0.0072	--
3/29/2012 12:00	0.0079	--	3/29/2012 12:00	0.0077	--	3/29/2012 12:00	0.0071	--
3/29/2012 13:00	0.0080	--	3/29/2012 13:00	0.0079	--	3/29/2012 13:00	0.0091	--
3/29/2012 14:00	0.0081	--	3/29/2012 14:00	0.0080	--	3/29/2012 14:00	0.0059	--
3/29/2012 15:00	0.0082	--	3/29/2012 15:00	0.0081	--	3/29/2012 15:00	0.0071	--
3/29/2012 16:00	0.0081	--	3/29/2012 16:00	0.0080	--	3/29/2012 16:00	0.0068	--
3/29/2012 17:00	0.0081	--	3/29/2012 17:00	0.0080	--	3/29/2012 17:00	0.0072	--
3/29/2012 18:00	0.0081	--	3/29/2012 18:00	0.0079	--	3/29/2012 18:00	0.0074	--
3/29/2012 19:00	0.0081	--	3/29/2012 19:00	0.0080	--	3/29/2012 19:00	0.0072	--
3/29/2012 20:00	0.0081	--	3/29/2012 20:00	0.0080	--	3/29/2012 20:00	0.0072	--
3/29/2012 21:00	0.0082	--	3/29/2012 21:00	0.0081	--	3/29/2012 21:00	0.0076	--
3/29/2012 22:00	0.0081	--	3/29/2012 22:00	0.0080	--	3/29/2012 22:00	0.0069	--
3/29/2012 23:00	0.0081	0.0083	3/29/2012 23:00	0.0080	0.0082	3/29/2012 23:00	0.0072	0.0071
3/30/2012 0:00	0.0081	--	3/30/2012 0:00	0.0079	--	3/30/2012 0:00	0.0077	--
3/30/2012 1:00	0.0081	--	3/30/2012 1:00	0.0079	--	3/30/2012 1:00	0.0069	--
3/30/2012 2:00	0.0081	--	3/30/2012 2:00	0.0080	--	3/30/2012 2:00	0.0074	--
3/30/2012 3:00	0.0081	--	3/30/2012 3:00	0.0079	--	3/30/2012 3:00	0.0071	--
3/30/2012 4:00	0.0081	--	3/30/2012 4:00	0.0080	--	3/30/2012 4:00	0.0077	--
3/30/2012 5:00	0.0083	--	3/30/2012 5:00	0.0082	--	3/30/2012 5:00	0.0071	--
3/30/2012 6:00	0.0081	--	3/30/2012 6:00	0.0080	--	3/30/2012 6:00	0.0072	--
3/30/2012 7:00	0.0081	--	3/30/2012 7:00	0.0080	--	3/30/2012 7:00	0.0074	--
3/30/2012 8:00	0.0081	--	3/30/2012 8:00	0.0080	--	3/30/2012 8:00	0.0073	--
3/30/2012 9:00	0.0081	--	3/30/2012 9:00	0.0080	--	3/30/2012 9:00	0.0073	--
3/30/2012 10:00	0.0082	--	3/30/2012 10:00	0.0081	--	3/30/2012 10:00	0.0074	--
3/30/2012 11:00	0.0082	--	3/30/2012 11:00	0.0080	--	3/30/2012 11:00	0.0075	--
3/30/2012 12:00	0.0081	--	3/30/2012 12:00	0.0080	--	3/30/2012 12:00	0.0073	--
3/30/2012 13:00	0.0080	--	3/30/2012 13:00	0.0079	--	3/30/2012 13:00	0.0073	--
3/30/2012 14:00	0.0081	--	3/30/2012 14:00	0.0079	--	3/30/2012 14:00	0.0074	--
3/30/2012 15:00	0.0081	--	3/30/2012 15:00	0.0080	--	3/30/2012 15:00	0.0073	--
3/30/2012 16:00	0.0081	--	3/30/2012 16:00	0.0079	--	3/30/2012 16:00	0.0074	--
3/30/2012 17:00	0.0081	--	3/30/2012 17:00	0.0079	--	3/30/2012 17:00	0.0071	--
3/30/2012 18:00	0.0080	--	3/30/2012 18:00	0.0079	--	3/30/2012 18:00	0.0077	--
3/30/2012 19:00	0.0081	--	3/30/2012 19:00	0.0079	--	3/30/2012 19:00	0.0070	--

Package Boiler No. 1 EPN 81BF01			Package Boiler No. 2 EPN 50BF02			Package Boiler No. 3 EPN 50BF03		
Date	NO_X (lb/MMBtu)	NO_X (lb/MMBtu) 30-day Rolling Average	Date	NO_X (lb/MMBtu)	NO_X (lb/MMBtu) 30-day Rolling Average	Date	NO_X (lb/MMBtu)	NO_X (lb/MMBtu) 30-day Rolling Average
3/30/2012 20:00	0.0081	--	3/30/2012 20:00	0.0080	--	3/30/2012 20:00	0.0072	--
3/30/2012 21:00	0.0081	--	3/30/2012 21:00	0.0080	--	3/30/2012 21:00	0.0074	--
3/30/2012 22:00	0.0081	--	3/30/2012 22:00	0.0080	--	3/30/2012 22:00	0.0071	--
3/30/2012 23:00	0.0081	0.0082	3/30/2012 23:00	0.0079	0.0079	3/30/2012 23:00	0.0074	0.0071
3/31/2012 0:00	0.0081	--	3/31/2012 0:00	0.0080	--	3/31/2012 0:00	0.0071	--
3/31/2012 1:00	0.0081	--	3/31/2012 1:00	0.0080	--	3/31/2012 1:00	0.0075	--
3/31/2012 2:00	0.0081	--	3/31/2012 2:00	0.0080	--	3/31/2012 2:00	0.0073	--
3/31/2012 3:00	0.0081	--	3/31/2012 3:00	0.0080	--	3/31/2012 3:00	0.0074	--
3/31/2012 4:00	0.0081	--	3/31/2012 4:00	0.0080	--	3/31/2012 4:00	0.0075	--
3/31/2012 5:00	0.0085	--	3/31/2012 5:00	0.0081	--	3/31/2012 5:00	0.0069	--
3/31/2012 6:00	0.0080	--	3/31/2012 6:00	0.0079	--	3/31/2012 6:00	0.0074	--
3/31/2012 7:00	0.0081	--	3/31/2012 7:00	0.0079	--	3/31/2012 7:00	0.0072	--
3/31/2012 8:00	0.0081	--	3/31/2012 8:00	0.0080	--	3/31/2012 8:00	0.0071	--
3/31/2012 9:00	0.0082	--	3/31/2012 9:00	0.0080	--	3/31/2012 9:00	0.0077	--
3/31/2012 10:00	0.0081	--	3/31/2012 10:00	0.0081	--	3/31/2012 10:00	0.0074	--
3/31/2012 11:00	0.0081	--	3/31/2012 11:00	0.0080	--	3/31/2012 11:00	0.0076	--
3/31/2012 12:00	0.0081	--	3/31/2012 12:00	0.0080	--	3/31/2012 12:00	0.0075	--
3/31/2012 13:00	0.0081	--	3/31/2012 13:00	0.0080	--	3/31/2012 13:00	0.0074	--
3/31/2012 14:00	0.0081	--	3/31/2012 14:00	0.0079	--	3/31/2012 14:00	0.0075	--
3/31/2012 15:00	0.0081	--	3/31/2012 15:00	0.0079	--	3/31/2012 15:00	0.0073	--
3/31/2012 16:00	0.0081	--	3/31/2012 16:00	0.0079	--	3/31/2012 16:00	0.0074	--
3/31/2012 17:00	0.0081	--	3/31/2012 17:00	0.0079	--	3/31/2012 17:00	0.0073	--
3/31/2012 18:00	0.0080	--	3/31/2012 18:00	0.0079	--	3/31/2012 18:00	0.0072	--
3/31/2012 19:00	0.0080	--	3/31/2012 19:00	0.0079	--	3/31/2012 19:00	0.0072	--
3/31/2012 20:00	0.0081	--	3/31/2012 20:00	0.0079	--	3/31/2012 20:00	0.0074	--
3/31/2012 21:00	0.0081	--	3/31/2012 21:00	0.0080	--	3/31/2012 21:00	0.0074	--
3/31/2012 22:00	0.0081	--	3/31/2012 22:00	0.0080	--	3/31/2012 22:00	0.0073	--
3/31/2012 23:00	0.0081	0.0082	3/31/2012 23:00	0.0080	0.0082	3/31/2012 23:00	0.0074	0.0071
4/1/2012 0:00	0.0081	--	4/1/2012 0:00	0.0080	--	4/1/2012 0:00	0.0073	--
4/1/2012 1:00	0.0081	--	4/1/2012 1:00	0.0079	--	4/1/2012 1:00	0.0073	--
4/1/2012 2:00	0.0081	--	4/1/2012 2:00	0.0080	--	4/1/2012 2:00	0.0074	--
4/1/2012 3:00	0.0081	--	4/1/2012 3:00	0.0080	--	4/1/2012 3:00	0.0073	--
4/1/2012 4:00	0.0081	--	4/1/2012 4:00	0.0080	--	4/1/2012 4:00	0.0077	--
4/1/2012 5:00	0.0070	--	4/1/2012 5:00	0.0072	--	4/1/2012 5:00	0.0078	--
4/1/2012 6:00	0.0081	--	4/1/2012 6:00	0.0077	--	4/1/2012 6:00	0.0075	--
4/1/2012 7:00	0.0081	--	4/1/2012 7:00	0.0080	--	4/1/2012 7:00	0.0075	--
4/1/2012 8:00	0.0081	--	4/1/2012 8:00	0.0080	--	4/1/2012 8:00	0.0073	--
4/1/2012 9:00	0.0081	--	4/1/2012 9:00	0.0080	--	4/1/2012 9:00	0.0075	--
4/1/2012 10:00	0.0081	--	4/1/2012 10:00	0.0080	--	4/1/2012 10:00	0.0075	--
4/1/2012 11:00	0.0081	--	4/1/2012 11:00	0.0080	--	4/1/2012 11:00	0.0076	--
4/1/2012 12:00	0.0081	--	4/1/2012 12:00	0.0080	--	4/1/2012 12:00	0.0077	--

Package Boiler No. 1 EPN 81BF01			Package Boiler No. 2 EPN 50BF02			Package Boiler No. 3 EPN 50BF03		
Date	NO_X (lb/MMBtu)	NO_X (lb/MMBtu) 30-day Rolling Average	Date	NO_X (lb/MMBtu)	NO_X (lb/MMBtu) 30-day Rolling Average	Date	NO_X (lb/MMBtu)	NO_X (lb/MMBtu) 30-day Rolling Average
4/1/2012 13:00	0.0081	--	4/1/2012 13:00	0.0080	--	4/1/2012 13:00	0.0073	--
4/1/2012 14:00	0.0081	--	4/1/2012 14:00	0.0079	--	4/1/2012 14:00	0.0067	--
4/1/2012 15:00	0.0081	--	4/1/2012 15:00	0.0079	--	4/1/2012 15:00	0.0074	--
4/1/2012 16:00	0.0081	--	4/1/2012 16:00	0.0079	--	4/1/2012 16:00	0.0073	--
4/1/2012 17:00	0.0081	--	4/1/2012 17:00	0.0080	--	4/1/2012 17:00	0.0074	--
4/1/2012 18:00	0.0082	--	4/1/2012 18:00	0.0080	--	4/1/2012 18:00	0.0073	--
4/1/2012 19:00	0.0080	--	4/1/2012 19:00	0.0080	--	4/1/2012 19:00	0.0073	--
4/1/2012 20:00	0.0080	--	4/1/2012 20:00	0.0078	--	4/1/2012 20:00	0.0071	--
4/1/2012 21:00	0.0081	--	4/1/2012 21:00	0.0079	--	4/1/2012 21:00	0.0074	--
4/1/2012 22:00	0.0080	--	4/1/2012 22:00	0.0079	--	4/1/2012 22:00	0.0074	--
4/1/2012 23:00	0.0081	0.0082	4/1/2012 23:00	0.0079	0.0085	4/1/2012 23:00	0.0073	0.0071
4/2/2012 0:00	0.0081	--	4/2/2012 0:00	0.0080	--	4/2/2012 0:00	0.0075	--
4/2/2012 1:00	0.0081	--	4/2/2012 1:00	0.0079	--	4/2/2012 1:00	0.0073	--
4/2/2012 2:00	0.0081	--	4/2/2012 2:00	0.0079	--	4/2/2012 2:00	0.0073	--
4/2/2012 3:00	0.0081	--	4/2/2012 3:00	0.0080	--	4/2/2012 3:00	0.0072	--
4/2/2012 4:00	0.0081	--	4/2/2012 4:00	0.0079	--	4/2/2012 4:00	0.0075	--
4/2/2012 5:00	0.0089	--	4/2/2012 5:00	0.0082	--	4/2/2012 5:00	0.0077	--
4/2/2012 6:00	0.0082	--	4/2/2012 6:00	0.0080	--	4/2/2012 6:00	0.0077	--
4/2/2012 7:00	0.0085	--	4/2/2012 7:00	0.0081	--	4/2/2012 7:00	0.0074	--
4/2/2012 8:00	0.0081	--	4/2/2012 8:00	0.0080	--	4/2/2012 8:00	0.0074	--
4/2/2012 9:00	0.0081	--	4/2/2012 9:00	0.0079	--	4/2/2012 9:00	0.0070	--
4/2/2012 10:00	0.0080	--	4/2/2012 10:00	0.0080	--	4/2/2012 10:00	0.0074	--
4/2/2012 11:00	0.0081	--	4/2/2012 11:00	0.0081	--	4/2/2012 11:00	0.0076	--
4/2/2012 12:00	0.0080	--	4/2/2012 12:00	0.0082	--	4/2/2012 12:00	0.0074	--
4/2/2012 13:00	0.0083	--	4/2/2012 13:00	0.0092	--	4/2/2012 13:00	0.0080	--
4/2/2012 14:00	0.0081	--	4/2/2012 14:00	0.0081	--	4/2/2012 14:00	0.0075	--
4/2/2012 15:00	0.0081	--	4/2/2012 15:00	0.0080	--	4/2/2012 15:00	0.0076	--
4/2/2012 16:00	0.0081	--	4/2/2012 16:00	0.0080	--	4/2/2012 16:00	0.0074	--
4/2/2012 17:00	0.0080	--	4/2/2012 17:00	0.0079	--	4/2/2012 17:00	0.0074	--
4/2/2012 18:00	0.0081	--	4/2/2012 18:00	0.0079	--	4/2/2012 18:00	0.0073	--
4/2/2012 19:00	0.0081	--	4/2/2012 19:00	0.0079	--	4/2/2012 19:00	0.0072	--
4/2/2012 20:00	0.0081	--	4/2/2012 20:00	0.0079	--	4/2/2012 20:00	0.0073	--
4/2/2012 21:00	0.0080	--	4/2/2012 21:00	0.0079	--	4/2/2012 21:00	0.0074	--
4/2/2012 22:00	0.0081	--	4/2/2012 22:00	0.0079	--	4/2/2012 22:00	0.0074	--
4/2/2012 23:00	0.0081	0.0082	4/2/2012 23:00	0.0080	0.0087	4/2/2012 23:00	0.0076	0.0071
4/3/2012 0:00	0.0081	--	4/3/2012 0:00	0.0080	--	4/3/2012 0:00	0.0075	--
4/3/2012 1:00	0.0081	--	4/3/2012 1:00	0.0080	--	4/3/2012 1:00	0.0075	--
4/3/2012 2:00	0.0081	--	4/3/2012 2:00	0.0080	--	4/3/2012 2:00	0.0074	--
4/3/2012 3:00	0.0081	--	4/3/2012 3:00	0.0080	--	4/3/2012 3:00	0.0075	--
4/3/2012 4:00	0.0080	--	4/3/2012 4:00	0.0080	--	4/3/2012 4:00	0.0072	--
4/3/2012 5:00	0.0083	--	4/3/2012 5:00	0.0078	--	4/3/2012 5:00	0.0073	--

Package Boiler No. 1 EPN 81BF01			Package Boiler No. 2 EPN 50BF02			Package Boiler No. 3 EPN 50BF03		
Date	NO_X (lb/MMBtu)	NO_X (lb/MMBtu) 30-day Rolling Average	Date	NO_X (lb/MMBtu)	NO_X (lb/MMBtu) 30-day Rolling Average	Date	NO_X (lb/MMBtu)	NO_X (lb/MMBtu) 30-day Rolling Average
4/3/2012 6:00	0.0081	--	4/3/2012 6:00	0.0079	--	4/3/2012 6:00	0.0074	--
4/3/2012 7:00	0.0082	--	4/3/2012 7:00	0.0080	--	4/3/2012 7:00	0.0079	--
4/3/2012 8:00	0.0080	--	4/3/2012 8:00	0.0083	--	4/3/2012 8:00	0.0071	--
4/3/2012 9:00	0.0082	--	4/3/2012 9:00	0.0081	--	4/3/2012 9:00	0.0074	--
4/3/2012 10:00	0.0081	--	4/3/2012 10:00	0.0079	--	4/3/2012 10:00	0.0074	--
4/3/2012 11:00	0.0082	--	4/3/2012 11:00	0.0080	--	4/3/2012 11:00	0.0077	--
4/3/2012 12:00	0.0081	--	4/3/2012 12:00	0.0080	--	4/3/2012 12:00	0.0074	--
4/3/2012 13:00	0.0081	--	4/3/2012 13:00	0.0079	--	4/3/2012 13:00	0.0072	--
4/3/2012 14:00	0.0081	--	4/3/2012 14:00	0.0080	--	4/3/2012 14:00	0.0076	--
4/3/2012 15:00	0.0081	--	4/3/2012 15:00	0.0079	--	4/3/2012 15:00	0.0072	--
4/3/2012 16:00	0.0082	--	4/3/2012 16:00	0.0080	--	4/3/2012 16:00	0.0074	--
4/3/2012 17:00	0.0081	--	4/3/2012 17:00	0.0080	--	4/3/2012 17:00	0.0073	--
4/3/2012 18:00	0.0081	--	4/3/2012 18:00	0.0080	--	4/3/2012 18:00	0.0071	--
4/3/2012 19:00	0.0081	--	4/3/2012 19:00	0.0079	--	4/3/2012 19:00	0.0073	--
4/3/2012 20:00	0.0081	--	4/3/2012 20:00	0.0080	--	4/3/2012 20:00	0.0075	--
4/3/2012 21:00	0.0081	--	4/3/2012 21:00	0.0080	--	4/3/2012 21:00	0.0077	--
4/3/2012 22:00	0.0081	--	4/3/2012 22:00	0.0080	--	4/3/2012 22:00	0.0075	--
4/3/2012 23:00	0.0081	0.0081	4/3/2012 23:00	0.0079	0.0083	4/3/2012 23:00	0.0074	0.0071
4/4/2012 0:00	0.0081	--	4/4/2012 0:00	0.0079	--	4/4/2012 0:00	0.0072	--
4/4/2012 1:00	0.0081	--	4/4/2012 1:00	0.0080	--	4/4/2012 1:00	0.0074	--
4/4/2012 2:00	0.0081	--	4/4/2012 2:00	0.0079	--	4/4/2012 2:00	0.0073	--
4/4/2012 3:00	0.0081	--	4/4/2012 3:00	0.0079	--	4/4/2012 3:00	0.0071	--
4/4/2012 4:00	0.0082	--	4/4/2012 4:00	0.0080	--	4/4/2012 4:00	0.0074	--
4/4/2012 5:00	0.0081	--	4/4/2012 5:00	0.0082	--	4/4/2012 5:00	0.0079	--
4/4/2012 6:00	0.0082	--	4/4/2012 6:00	0.0082	--	4/4/2012 6:00	0.0078	--
4/4/2012 7:00	0.0080	--	4/4/2012 7:00	0.0079	--	4/4/2012 7:00	0.0071	--
4/4/2012 8:00	0.0081	--	4/4/2012 8:00	0.0079	--	4/4/2012 8:00	0.0075	--
4/4/2012 9:00	0.0081	--	4/4/2012 9:00	0.0080	--	4/4/2012 9:00	0.0074	--
4/4/2012 10:00	0.0081	--	4/4/2012 10:00	0.0080	--	4/4/2012 10:00	0.0074	--
4/4/2012 11:00	0.0081	--	4/4/2012 11:00	0.0079	--	4/4/2012 11:00	0.0075	--
4/4/2012 12:00	0.0082	--	4/4/2012 12:00	0.0080	--	4/4/2012 12:00	0.0074	--
4/4/2012 13:00	0.0082	--	4/4/2012 13:00	0.0081	--	4/4/2012 13:00	0.0072	--
4/4/2012 14:00	0.0081	--	4/4/2012 14:00	0.0080	--	4/4/2012 14:00	0.0074	--
4/4/2012 15:00	0.0080	--	4/4/2012 15:00	0.0078	--	4/4/2012 15:00	0.0072	--
4/4/2012 16:00	0.0081	--	4/4/2012 16:00	0.0079	--	4/4/2012 16:00	0.0075	--
4/4/2012 17:00	0.0081	--	4/4/2012 17:00	0.0079	--	4/4/2012 17:00	0.0074	--
4/4/2012 18:00	0.0082	--	4/4/2012 18:00	0.0080	--	4/4/2012 18:00	0.0073	--
4/4/2012 19:00	0.0082	--	4/4/2012 19:00	0.0080	--	4/4/2012 19:00	0.0076	--
4/4/2012 20:00	0.0082	--	4/4/2012 20:00	0.0081	--	4/4/2012 20:00	0.0076	--
4/4/2012 21:00	0.0081	--	4/4/2012 21:00	0.0079	--	4/4/2012 21:00	0.0072	--
4/4/2012 22:00	0.0081	--	4/4/2012 22:00	0.0078	--	4/4/2012 22:00	0.0071	--

Package Boiler No. 1 EPN 81BF01			Package Boiler No. 2 EPN 50BF02			Package Boiler No. 3 EPN 50BF03		
Date	NO_X (lb/MMBtu)	NO_X (lb/MMBtu) 30-day Rolling Average	Date	NO_X (lb/MMBtu)	NO_X (lb/MMBtu) 30-day Rolling Average	Date	NO_X (lb/MMBtu)	NO_X (lb/MMBtu) 30-day Rolling Average
4/4/2012 23:00	0.0081	0.0083	4/4/2012 23:00	0.0079	0.0086	4/4/2012 23:00	0.0073	0.0073
4/5/2012 0:00	0.0081	--	4/5/2012 0:00	0.0080	--	4/5/2012 0:00	0.0077	--
4/5/2012 1:00	0.0081	--	4/5/2012 1:00	0.0080	--	4/5/2012 1:00	0.0074	--
4/5/2012 2:00	0.0082	--	4/5/2012 2:00	0.0080	--	4/5/2012 2:00	0.0075	--
4/5/2012 3:00	0.0081	--	4/5/2012 3:00	0.0080	--	4/5/2012 3:00	0.0075	--
4/5/2012 4:00	0.0082	--	4/5/2012 4:00	0.0080	--	4/5/2012 4:00	0.0075	--
4/5/2012 5:00	0.0084	--	4/5/2012 5:00	0.0085	--	4/5/2012 5:00	0.0084	--
4/5/2012 6:00	0.0081	--	4/5/2012 6:00	0.0080	--	4/5/2012 6:00	0.0073	--
4/5/2012 7:00	0.0082	--	4/5/2012 7:00	0.0080	--	4/5/2012 7:00	0.0072	--
4/5/2012 8:00	0.0081	--	4/5/2012 8:00	0.0080	--	4/5/2012 8:00	0.0071	--
4/5/2012 9:00	0.0082	--	4/5/2012 9:00	0.0080	--	4/5/2012 9:00	0.0074	--
4/5/2012 10:00	0.0082	--	4/5/2012 10:00	0.0081	--	4/5/2012 10:00	0.0074	--
4/5/2012 11:00	0.0082	--	4/5/2012 11:00	0.0080	--	4/5/2012 11:00	0.0076	--
4/5/2012 12:00	0.0082	--	4/5/2012 12:00	0.0081	--	4/5/2012 12:00	0.0076	--
4/5/2012 13:00	0.0083	--	4/5/2012 13:00	0.0081	--	4/5/2012 13:00	0.0076	--
4/5/2012 14:00	0.0082	--	4/5/2012 14:00	0.0080	--	4/5/2012 14:00	0.0073	--
4/5/2012 15:00	0.0081	--	4/5/2012 15:00	0.0080	--	4/5/2012 15:00	0.0074	--
4/5/2012 16:00	0.0081	--	4/5/2012 16:00	0.0078	--	4/5/2012 16:00	0.0076	--
4/5/2012 17:00	0.0081	--	4/5/2012 17:00	0.0080	--	4/5/2012 17:00	0.0071	--
4/5/2012 18:00	0.0081	--	4/5/2012 18:00	0.0077	--	4/5/2012 18:00	0.0062	--
4/5/2012 19:00	0.0082	--	4/5/2012 19:00	0.0080	--	4/5/2012 19:00	0.0077	--
4/5/2012 20:00	0.0081	--	4/5/2012 20:00	0.0080	--	4/5/2012 20:00	0.0074	--
4/5/2012 21:00	0.0081	--	4/5/2012 21:00	0.0079	--	4/5/2012 21:00	0.0072	--
4/5/2012 22:00	0.0080	--	4/5/2012 22:00	0.0079	--	4/5/2012 22:00	0.0073	--
4/5/2012 23:00	0.0081	0.0084	4/5/2012 23:00	0.0080	0.0079	4/5/2012 23:00	0.0074	0.0074
4/6/2012 0:00	0.0081	--	4/6/2012 0:00	0.0079	--	4/6/2012 0:00	0.0073	--
4/6/2012 1:00	0.0081	--	4/6/2012 1:00	0.0080	--	4/6/2012 1:00	0.0070	--
4/6/2012 2:00	0.0081	--	4/6/2012 2:00	0.0080	--	4/6/2012 2:00	0.0072	--
4/6/2012 3:00	0.0081	--	4/6/2012 3:00	0.0079	--	4/6/2012 3:00	0.0072	--
4/6/2012 4:00	0.0081	--	4/6/2012 4:00	0.0081	--	4/6/2012 4:00	0.0071	--
4/6/2012 5:00	0.0091	--	4/6/2012 5:00	0.0084	--	4/6/2012 5:00	0.0079	--
4/6/2012 6:00	0.0090	--	4/6/2012 6:00	0.0080	--	4/6/2012 6:00	0.0075	--
4/6/2012 7:00	0.0095	--	4/6/2012 7:00	0.0079	--	4/6/2012 7:00	0.0076	--
4/6/2012 8:00	0.0099	--	4/6/2012 8:00	0.0078	--	4/6/2012 8:00	0.0076	--
4/6/2012 9:00	0.0082	--	4/6/2012 9:00	0.0083	--	4/6/2012 9:00	0.0076	--
4/6/2012 10:00	0.0081	--	4/6/2012 10:00	0.0080	--	4/6/2012 10:00	0.0075	--
4/6/2012 11:00	0.0081	--	4/6/2012 11:00	0.0078	--	4/6/2012 11:00	0.0076	--
4/6/2012 12:00	0.0081	--	4/6/2012 12:00	0.0081	--	4/6/2012 12:00	0.0074	--
4/6/2012 13:00	0.0081	--	4/6/2012 13:00	0.0078	--	4/6/2012 13:00	0.0075	--
4/6/2012 14:00	0.0082	--	4/6/2012 14:00	0.0076	--	4/6/2012 14:00	0.0077	--
4/6/2012 15:00	0.0080	--	4/6/2012 15:00	0.0083	--	4/6/2012 15:00	0.0073	--

Package Boiler No. 1 EPN 81BF01			Package Boiler No. 2 EPN 50BF02			Package Boiler No. 3 EPN 50BF03		
Date	NO_X (lb/MMBtu)	NO_X (lb/MMBtu) 30-day Rolling Average	Date	NO_X (lb/MMBtu)	NO_X (lb/MMBtu) 30-day Rolling Average	Date	NO_X (lb/MMBtu)	NO_X (lb/MMBtu) 30-day Rolling Average
4/6/2012 16:00	0.0081	--	4/6/2012 16:00	0.0078	--	4/6/2012 16:00	0.0075	--
4/6/2012 17:00	0.0081	--	4/6/2012 17:00	0.0080	--	4/6/2012 17:00	0.0075	--
4/6/2012 18:00	0.0080	--	4/6/2012 18:00	0.0079	--	4/6/2012 18:00	0.0074	--
4/6/2012 19:00	0.0081	--	4/6/2012 19:00	0.0079	--	4/6/2012 19:00	0.0075	--
4/6/2012 20:00	0.0081	--	4/6/2012 20:00	0.0077	--	4/6/2012 20:00	0.0075	--
4/6/2012 21:00	0.0081	--	4/6/2012 21:00	0.0080	--	4/6/2012 21:00	0.0076	--
4/6/2012 22:00	0.0081	--	4/6/2012 22:00	0.0079	--	4/6/2012 22:00	0.0076	--
4/6/2012 23:00	0.0081	0.0084	4/6/2012 23:00	0.0077	0.0080	4/6/2012 23:00	0.0076	0.0074
4/7/2012 0:00	0.0080	--	4/7/2012 0:00	0.0080	--	4/7/2012 0:00	0.0075	--
4/7/2012 1:00	0.0081	--	4/7/2012 1:00	0.0079	--	4/7/2012 1:00	0.0076	--
4/7/2012 2:00	0.0080	--	4/7/2012 2:00	0.0080	--	4/7/2012 2:00	0.0075	--
4/7/2012 3:00	0.0081	--	4/7/2012 3:00	0.0078	--	4/7/2012 3:00	0.0075	--
4/7/2012 4:00	0.0081	--	4/7/2012 4:00	0.0077	--	4/7/2012 4:00	0.0075	--
4/7/2012 5:00	0.0103	--	4/7/2012 5:00	0.0126	--	4/7/2012 5:00	0.0111	--
4/7/2012 6:00	0.0080	--	4/7/2012 6:00	0.0081	--	4/7/2012 6:00	0.0074	--
4/7/2012 7:00	0.0080	--	4/7/2012 7:00	0.0079	--	4/7/2012 7:00	0.0074	--
4/7/2012 8:00	0.0081	--	4/7/2012 8:00	0.0079	--	4/7/2012 8:00	0.0077	--
4/7/2012 9:00	0.0081	--	4/7/2012 9:00	0.0083	--	4/7/2012 9:00	0.0073	--
4/7/2012 10:00	0.0082	--	4/7/2012 10:00	0.0078	--	4/7/2012 10:00	0.0076	--
4/7/2012 11:00	0.0082	--	4/7/2012 11:00	0.0080	--	4/7/2012 11:00	0.0077	--
4/7/2012 12:00	0.0082	--	4/7/2012 12:00	0.0083	--	4/7/2012 12:00	0.0078	--
4/7/2012 13:00	0.0081	--	4/7/2012 13:00	0.0080	--	4/7/2012 13:00	0.0075	--
4/7/2012 14:00	0.0081	--	4/7/2012 14:00	0.0079	--	4/7/2012 14:00	0.0076	--
4/7/2012 15:00	0.0082	--	4/7/2012 15:00	0.0081	--	4/7/2012 15:00	0.0075	--
4/7/2012 16:00	0.0080	--	4/7/2012 16:00	0.0077	--	4/7/2012 16:00	0.0074	--
4/7/2012 17:00	0.0081	--	4/7/2012 17:00	0.0079	--	4/7/2012 17:00	0.0075	--
4/7/2012 18:00	0.0080	--	4/7/2012 18:00	0.0080	--	4/7/2012 18:00	0.0074	--
4/7/2012 19:00	0.0081	--	4/7/2012 19:00	0.0077	--	4/7/2012 19:00	0.0075	--
4/7/2012 20:00	0.0081	--	4/7/2012 20:00	0.0078	--	4/7/2012 20:00	0.0076	--
4/7/2012 21:00	0.0081	--	4/7/2012 21:00	0.0077	--	4/7/2012 21:00	0.0074	--
4/7/2012 22:00	0.0081	--	4/7/2012 22:00	0.0081	--	4/7/2012 22:00	0.0075	--
4/7/2012 23:00	0.0081	0.0084	4/7/2012 23:00	0.0080	0.0080	4/7/2012 23:00	0.0076	0.0074
4/8/2012 0:00	0.0081	--	4/8/2012 0:00	0.0079	--	4/8/2012 0:00	0.0076	--
4/8/2012 1:00	0.0081	--	4/8/2012 1:00	0.0078	--	4/8/2012 1:00	0.0075	--
4/8/2012 2:00	0.0081	--	4/8/2012 2:00	0.0082	--	4/8/2012 2:00	0.0076	--
4/8/2012 3:00	0.0081	--	4/8/2012 3:00	0.0081	--	4/8/2012 3:00	0.0076	--
4/8/2012 4:00	0.0081	--	4/8/2012 4:00	0.0077	--	4/8/2012 4:00	0.0077	--
4/8/2012 5:00	0.0085	--	4/8/2012 5:00	0.0071	--	4/8/2012 5:00	0.0073	--
4/8/2012 6:00	0.0083	--	4/8/2012 6:00	0.0081	--	4/8/2012 6:00	0.0077	--
4/8/2012 7:00	0.0081	--	4/8/2012 7:00	0.0086	--	4/8/2012 7:00	0.0075	--
4/8/2012 8:00	0.0082	--	4/8/2012 8:00	0.0081	--	4/8/2012 8:00	0.0077	--

Package Boiler No. 1 EPN 81BF01			Package Boiler No. 2 EPN 50BF02			Package Boiler No. 3 EPN 50BF03		
Date	NO_X (lb/MMBtu)	NO_X (lb/MMBtu) 30-day Rolling Average	Date	NO_X (lb/MMBtu)	NO_X (lb/MMBtu) 30-day Rolling Average	Date	NO_X (lb/MMBtu)	NO_X (lb/MMBtu) 30-day Rolling Average
4/8/2012 9:00	0.0082	--	4/8/2012 9:00	0.0082	--	4/8/2012 9:00	0.0074	--
4/8/2012 10:00	0.0082	--	4/8/2012 10:00	0.0083	--	4/8/2012 10:00	0.0076	--
4/8/2012 11:00	0.0082	--	4/8/2012 11:00	0.0081	--	4/8/2012 11:00	0.0076	--
4/8/2012 12:00	0.0081	--	4/8/2012 12:00	0.0080	--	4/8/2012 12:00	0.0075	--
4/8/2012 13:00	0.0081	--	4/8/2012 13:00	0.0080	--	4/8/2012 13:00	0.0077	--
4/8/2012 14:00	0.0082	--	4/8/2012 14:00	0.0079	--	4/8/2012 14:00	0.0077	--
4/8/2012 15:00	0.0080	--	4/8/2012 15:00	0.0076	--	4/8/2012 15:00	0.0073	--
4/8/2012 16:00	0.0080	--	4/8/2012 16:00	0.0079	--	4/8/2012 16:00	0.0073	--
4/8/2012 17:00	0.0081	--	4/8/2012 17:00	0.0078	--	4/8/2012 17:00	0.0074	--
4/8/2012 18:00	0.0081	--	4/8/2012 18:00	0.0078	--	4/8/2012 18:00	0.0075	--
4/8/2012 19:00	0.0081	--	4/8/2012 19:00	0.0077	--	4/8/2012 19:00	0.0076	--
4/8/2012 20:00	0.0081	--	4/8/2012 20:00	0.0078	--	4/8/2012 20:00	0.0075	--
4/8/2012 21:00	0.0081	--	4/8/2012 21:00	0.0078	--	4/8/2012 21:00	0.0076	--
4/8/2012 22:00	0.0081	--	4/8/2012 22:00	0.0078	--	4/8/2012 22:00	0.0076	--
4/8/2012 23:00	0.0081	0.0084	4/8/2012 23:00	0.0080	0.0080	4/8/2012 23:00	0.0075	0.0074
4/9/2012 0:00	0.0081	--	4/9/2012 0:00	0.0080	--	4/9/2012 0:00	0.0075	--
4/9/2012 1:00	0.0081	--	4/9/2012 1:00	0.0079	--	4/9/2012 1:00	0.0075	--
4/9/2012 2:00	0.0081	--	4/9/2012 2:00	0.0080	--	4/9/2012 2:00	0.0075	--
4/9/2012 3:00	0.0081	--	4/9/2012 3:00	0.0079	--	4/9/2012 3:00	0.0076	--
4/9/2012 4:00	0.0081	--	4/9/2012 4:00	0.0079	--	4/9/2012 4:00	0.0076	--
4/9/2012 5:00	0.0082	--	4/9/2012 5:00	0.0091	--	4/9/2012 5:00	0.0079	--
4/9/2012 6:00	0.0081	--	4/9/2012 6:00	0.0078	--	4/9/2012 6:00	0.0076	--
4/9/2012 7:00	0.0081	--	4/9/2012 7:00	0.0082	--	4/9/2012 7:00	0.0076	--
4/9/2012 8:00	0.0082	--	4/9/2012 8:00	0.0084	--	4/9/2012 8:00	0.0076	--
4/9/2012 9:00	0.0082	--	4/9/2012 9:00	0.0085	--	4/9/2012 9:00	0.0073	--
4/9/2012 10:00	0.0082	--	4/9/2012 10:00	0.0080	--	4/9/2012 10:00	0.0077	--
4/9/2012 11:00	0.0082	--	4/9/2012 11:00	0.0078	--	4/9/2012 11:00	0.0076	--
4/9/2012 12:00	0.0081	--	4/9/2012 12:00	0.0076	--	4/9/2012 12:00	0.0076	--
4/9/2012 13:00	0.0081	--	4/9/2012 13:00	0.0082	--	4/9/2012 13:00	0.0075	--
4/9/2012 14:00	0.0081	--	4/9/2012 14:00	0.0079	--	4/9/2012 14:00	0.0076	--
4/9/2012 15:00	0.0081	--	4/9/2012 15:00	0.0077	--	4/9/2012 15:00	0.0073	--
4/9/2012 16:00	0.0081	--	4/9/2012 16:00	0.0080	--	4/9/2012 16:00	0.0074	--
4/9/2012 17:00	0.0081	--	4/9/2012 17:00	0.0088	--	4/9/2012 17:00	0.0075	--
4/9/2012 18:00	0.0080	--	4/9/2012 18:00	0.0082	--	4/9/2012 18:00	0.0074	--
4/9/2012 19:00	0.0081	--	4/9/2012 19:00	0.0079	--	4/9/2012 19:00	0.0076	--
4/9/2012 20:00	0.0081	--	4/9/2012 20:00	0.0078	--	4/9/2012 20:00	0.0074	--
4/9/2012 21:00	0.0081	--	4/9/2012 21:00	0.0079	--	4/9/2012 21:00	0.0076	--
4/9/2012 22:00	0.0081	--	4/9/2012 22:00	0.0081	--	4/9/2012 22:00	0.0076	--
4/9/2012 23:00	0.0081	0.0084	4/9/2012 23:00	0.0080	0.0081	4/9/2012 23:00	0.0075	0.0074
4/10/2012 0:00	0.0082	--	4/10/2012 0:00	0.0077	--	4/10/2012 0:00	0.0076	--
4/10/2012 1:00	0.0082	--	4/10/2012 1:00	0.0077	--	4/10/2012 1:00	0.0077	--

Package Boiler No. 1 EPN 81BF01			Package Boiler No. 2 EPN 50BF02			Package Boiler No. 3 EPN 50BF03		
Date	NO_X (lb/MMBtu)	NO_X (lb/MMBtu) 30-day Rolling Average	Date	NO_X (lb/MMBtu)	NO_X (lb/MMBtu) 30-day Rolling Average	Date	NO_X (lb/MMBtu)	NO_X (lb/MMBtu) 30-day Rolling Average
4/10/2012 2:00	0.0080	--	4/10/2012 2:00	0.0079	--	4/10/2012 2:00	0.0075	--
4/10/2012 3:00	0.0081	--	4/10/2012 3:00	0.0080	--	4/10/2012 3:00	0.0075	--
4/10/2012 4:00	0.0081	--	4/10/2012 4:00	0.0083	--	4/10/2012 4:00	0.0075	--
4/10/2012 5:00	0.0084	--	4/10/2012 5:00	0.0066	--	4/10/2012 5:00	0.0078	--
4/10/2012 6:00	0.0081	--	4/10/2012 6:00	0.0080	--	4/10/2012 6:00	0.0075	--
4/10/2012 7:00	0.0082	--	4/10/2012 7:00	0.0082	--	4/10/2012 7:00	0.0075	--
4/10/2012 8:00	0.0080	--	4/10/2012 8:00	0.0083	--	4/10/2012 8:00	0.0077	--
4/10/2012 9:00	0.0082	--	4/10/2012 9:00	0.0087	--	4/10/2012 9:00	0.0074	--
4/10/2012 10:00	0.0082	--	4/10/2012 10:00	0.0082	--	4/10/2012 10:00	0.0081	--
4/10/2012 11:00	0.0082	--	4/10/2012 11:00	0.0081	--	4/10/2012 11:00	0.0077	--
4/10/2012 12:00	0.0081	--	4/10/2012 12:00	0.0082	--	4/10/2012 12:00	0.0076	--
4/10/2012 13:00	0.0081	--	4/10/2012 13:00	0.0079	--	4/10/2012 13:00	0.0072	--
4/10/2012 14:00	0.0081	--	4/10/2012 14:00	0.0080	--	4/10/2012 14:00	0.0076	--
4/10/2012 15:00	0.0082	--	4/10/2012 15:00	0.0081	--	4/10/2012 15:00	0.0077	--
4/10/2012 16:00	0.0082	--	4/10/2012 16:00	0.0082	--	4/10/2012 16:00	0.0075	--
4/10/2012 17:00	0.0081	--	4/10/2012 17:00	0.0082	--	4/10/2012 17:00	0.0075	--
4/10/2012 18:00	0.0080	--	4/10/2012 18:00	0.0079	--	4/10/2012 18:00	0.0073	--
4/10/2012 19:00	0.0080	--	4/10/2012 19:00	0.0077	--	4/10/2012 19:00	0.0073	--
4/10/2012 20:00	0.0081	--	4/10/2012 20:00	0.0079	--	4/10/2012 20:00	0.0075	--
4/10/2012 21:00	0.0081	--	4/10/2012 21:00	0.0079	--	4/10/2012 21:00	0.0076	--
4/10/2012 22:00	0.0081	--	4/10/2012 22:00	0.0081	--	4/10/2012 22:00	0.0076	--
4/10/2012 23:00	0.0081	0.0083	4/10/2012 23:00	0.0080	0.0081	4/10/2012 23:00	0.0075	0.0075
4/11/2012 0:00	0.0081	--	4/11/2012 0:00	0.0080	--	4/11/2012 0:00	0.0075	--
4/11/2012 1:00	0.0081	--	4/11/2012 1:00	0.0080	--	4/11/2012 1:00	0.0075	--
4/11/2012 2:00	0.0082	--	4/11/2012 2:00	0.0077	--	4/11/2012 2:00	0.0076	--
4/11/2012 3:00	0.0081	--	4/11/2012 3:00	0.0079	--	4/11/2012 3:00	0.0076	--
4/11/2012 4:00	0.0081	--	4/11/2012 4:00	0.0081	--	4/11/2012 4:00	0.0076	--
4/11/2012 5:00	0.0083	--	4/11/2012 5:00	0.0089	--	4/11/2012 5:00	0.0080	--
4/11/2012 6:00	0.0081	--	4/11/2012 6:00	0.0080	--	4/11/2012 6:00	0.0076	--
4/11/2012 7:00	0.0082	--	4/11/2012 7:00	0.0083	--	4/11/2012 7:00	0.0076	--
4/11/2012 8:00	0.0084	--	4/11/2012 8:00	0.0081	--	4/11/2012 8:00	0.0069	--
4/11/2012 9:00	0.0092	--	4/11/2012 9:00	0.0077	--	4/11/2012 9:00	0.0059	--
4/11/2012 10:00	0.0074	--	4/11/2012 10:00	0.0098	--	4/11/2012 10:00	0.0076	--
4/11/2012 11:00	0.0082	--	4/11/2012 11:00	0.0083	--	4/11/2012 11:00	0.0077	--
4/11/2012 12:00	0.0081	--	4/11/2012 12:00	0.0080	--	4/11/2012 12:00	0.0086	--
4/11/2012 13:00	0.0080	--	4/11/2012 13:00	0.0075	--	4/11/2012 13:00	0.0078	--
4/11/2012 14:00	0.0080	--	4/11/2012 14:00	0.0089	--	4/11/2012 14:00	0.0067	--
4/11/2012 15:00	0.0082	--	4/11/2012 15:00	0.0087	--	4/11/2012 15:00	0.0072	--
4/11/2012 16:00	0.0081	--	4/11/2012 16:00	0.0081	--	4/11/2012 16:00	0.0072	--
4/11/2012 17:00	0.0081	--	4/11/2012 17:00	0.0081	--	4/11/2012 17:00	0.0077	--
4/11/2012 18:00	0.0081	--	4/11/2012 18:00	0.0081	--	4/11/2012 18:00	0.0075	--

Package Boiler No. 1 EPN 81BF01			Package Boiler No. 2 EPN 50BF02			Package Boiler No. 3 EPN 50BF03		
Date	NO_X (lb/MMBtu)	NO_X (lb/MMBtu) 30-day Rolling Average	Date	NO_X (lb/MMBtu)	NO_X (lb/MMBtu) 30-day Rolling Average	Date	NO_X (lb/MMBtu)	NO_X (lb/MMBtu) 30-day Rolling Average
4/11/2012 19:00	0.0080	--	4/11/2012 19:00	0.0080	--	4/11/2012 19:00	0.0073	--
4/11/2012 20:00	0.0081	--	4/11/2012 20:00	0.0082	--	4/11/2012 20:00	0.0076	--
4/11/2012 21:00	0.0081	--	4/11/2012 21:00	0.0082	--	4/11/2012 21:00	0.0076	--
4/11/2012 22:00	0.0081	--	4/11/2012 22:00	0.0082	--	4/11/2012 22:00	0.0075	--
4/11/2012 23:00	0.0081	0.0083	4/11/2012 23:00	0.0082	0.0082	4/11/2012 23:00	0.0075	0.0075
4/12/2012 0:00	0.0081	--	4/12/2012 0:00	0.0083	--	4/12/2012 0:00	0.0077	--
4/12/2012 1:00	0.0081	--	4/12/2012 1:00	0.0081	--	4/12/2012 1:00	0.0073	--
4/12/2012 2:00	0.0081	--	4/12/2012 2:00	0.0082	--	4/12/2012 2:00	0.0076	--
4/12/2012 3:00	0.0081	--	4/12/2012 3:00	0.0082	--	4/12/2012 3:00	0.0076	--
4/12/2012 4:00	0.0081	--	4/12/2012 4:00	0.0082	--	4/12/2012 4:00	0.0077	--
4/12/2012 5:00	0.0082	--	4/12/2012 5:00	0.0084	--	4/12/2012 5:00	0.0068	--
4/12/2012 6:00	0.0082	--	4/12/2012 6:00	0.0082	--	4/12/2012 6:00	0.0077	--
4/12/2012 7:00	0.0081	--	4/12/2012 7:00	0.0081	--	4/12/2012 7:00	0.0081	--
4/12/2012 8:00	0.0081	--	4/12/2012 8:00	0.0082	--	4/12/2012 8:00	0.0074	--
4/12/2012 9:00	0.0081	--	4/12/2012 9:00	0.0082	--	4/12/2012 9:00	0.0073	--
4/12/2012 10:00	0.0082	--	4/12/2012 10:00	0.0084	--	4/12/2012 10:00	0.0081	--
4/12/2012 11:00	0.0082	--	4/12/2012 11:00	0.0083	--	4/12/2012 11:00	0.0077	--
4/12/2012 12:00	0.0082	--	4/12/2012 12:00	0.0083	--	4/12/2012 12:00	0.0078	--
4/12/2012 13:00	0.0080	--	4/12/2012 13:00	0.0082	--	4/12/2012 13:00	0.0077	--
4/12/2012 14:00	0.0081	--	4/12/2012 14:00	0.0082	--	4/12/2012 14:00	0.0077	--
4/12/2012 15:00	0.0081	--	4/12/2012 15:00	0.0082	--	4/12/2012 15:00	0.0077	--
4/12/2012 16:00	0.0084	--	4/12/2012 16:00	0.0085	--	4/12/2012 16:00	0.0079	--
4/12/2012 17:00	0.0079	--	4/12/2012 17:00	0.0080	--	4/12/2012 17:00	0.0063	--
4/12/2012 18:00	0.0080	--	4/12/2012 18:00	0.0080	--	4/12/2012 18:00	0.0076	--
4/12/2012 19:00	0.0080	--	4/12/2012 19:00	0.0080	--	4/12/2012 19:00	0.0072	--
4/12/2012 20:00	0.0081	--	4/12/2012 20:00	0.0081	--	4/12/2012 20:00	0.0079	--
4/12/2012 21:00	0.0082	--	4/12/2012 21:00	0.0080	--	4/12/2012 21:00	0.0068	--
4/12/2012 22:00	0.0069	--	4/12/2012 22:00	0.0060	--	4/12/2012 22:00	0.0066	--
4/12/2012 23:00	0.0078	0.0083	4/12/2012 23:00	0.0073	0.0082	4/12/2012 23:00	0.0071	0.0075
4/13/2012 0:00	0.0083	--	4/13/2012 0:00	0.0083	--	4/13/2012 0:00	0.0077	--
4/13/2012 1:00	0.0083	--	4/13/2012 1:00	0.0084	--	4/13/2012 1:00	0.0077	--
4/13/2012 2:00	0.0081	--	4/13/2012 2:00	0.0082	--	4/13/2012 2:00	0.0079	--
4/13/2012 3:00	0.0081	--	4/13/2012 3:00	0.0083	--	4/13/2012 3:00	0.0069	--
4/13/2012 4:00	0.0081	--	4/13/2012 4:00	0.0083	--	4/13/2012 4:00	0.0073	--
4/13/2012 5:00	0.0080	--	4/13/2012 5:00	0.0080	--	4/13/2012 5:00	0.0073	--
4/13/2012 6:00	0.0080	--	4/13/2012 6:00	0.0079	--	4/13/2012 6:00	0.0075	--
4/13/2012 7:00	0.0082	--	4/13/2012 7:00	0.0079	--	4/13/2012 7:00	0.0081	--
4/13/2012 8:00	0.0082	--	4/13/2012 8:00	0.0082	--	4/13/2012 8:00	0.0080	--
4/13/2012 9:00	0.0082	--	4/13/2012 9:00	0.0083	--	4/13/2012 9:00	0.0079	--
4/13/2012 10:00	0.0082	--	4/13/2012 10:00	0.0082	--	4/13/2012 10:00	0.0074	--
4/13/2012 11:00	0.0082	--	4/13/2012 11:00	0.0082	--	4/13/2012 11:00	0.0076	--

Package Boiler No. 1 EPN 81BF01			Package Boiler No. 2 EPN 50BF02			Package Boiler No. 3 EPN 50BF03		
Date	NO_X (lb/MMBtu)	NO_X (lb/MMBtu) 30-day Rolling Average	Date	NO_X (lb/MMBtu)	NO_X (lb/MMBtu) 30-day Rolling Average	Date	NO_X (lb/MMBtu)	NO_X (lb/MMBtu) 30-day Rolling Average
4/13/2012 12:00	0.0081	--	4/13/2012 12:00	0.0082	--	4/13/2012 12:00	0.0074	--
4/13/2012 13:00	0.0081	--	4/13/2012 13:00	0.0082	--	4/13/2012 13:00	0.0077	--
4/13/2012 14:00	0.0083	--	4/13/2012 14:00	0.0083	--	4/13/2012 14:00	0.0078	--
4/13/2012 15:00	0.0081	--	4/13/2012 15:00	0.0082	--	4/13/2012 15:00	0.0075	--
4/13/2012 16:00	0.0081	--	4/13/2012 16:00	0.0081	--	4/13/2012 16:00	0.0076	--
4/13/2012 17:00	0.0081	--	4/13/2012 17:00	0.0081	--	4/13/2012 17:00	0.0075	--
4/13/2012 18:00	0.0080	--	4/13/2012 18:00	0.0081	--	4/13/2012 18:00	0.0075	--
4/13/2012 19:00	0.0081	--	4/13/2012 19:00	0.0081	--	4/13/2012 19:00	0.0076	--
4/13/2012 20:00	0.0081	--	4/13/2012 20:00	0.0081	--	4/13/2012 20:00	0.0075	--
4/13/2012 21:00	0.0081	--	4/13/2012 21:00	0.0082	--	4/13/2012 21:00	0.0074	--
4/13/2012 22:00	0.0081	--	4/13/2012 22:00	0.0082	--	4/13/2012 22:00	0.0077	--
4/13/2012 23:00	0.0082	0.0083	4/13/2012 23:00	0.0082	0.0082	4/13/2012 23:00	0.0074	0.0075
4/14/2012 0:00	0.0081	--	4/14/2012 0:00	0.0082	--	4/14/2012 0:00	0.0077	--
4/14/2012 1:00	0.0081	--	4/14/2012 1:00	0.0082	--	4/14/2012 1:00	0.0075	--
4/14/2012 2:00	0.0081	--	4/14/2012 2:00	0.0082	--	4/14/2012 2:00	0.0075	--
4/14/2012 3:00	0.0081	--	4/14/2012 3:00	0.0082	--	4/14/2012 3:00	0.0072	--
4/14/2012 4:00	0.0081	--	4/14/2012 4:00	0.0082	--	4/14/2012 4:00	0.0073	--
4/14/2012 5:00	0.0087	--	4/14/2012 5:00	0.0083	--	4/14/2012 5:00	0.0089	--
4/14/2012 6:00	0.0082	--	4/14/2012 6:00	0.0082	--	4/14/2012 6:00	0.0076	--
4/14/2012 7:00	0.0082	--	4/14/2012 7:00	0.0082	--	4/14/2012 7:00	0.0078	--
4/14/2012 8:00	0.0082	--	4/14/2012 8:00	0.0083	--	4/14/2012 8:00	0.0075	--
4/14/2012 9:00	0.0082	--	4/14/2012 9:00	0.0084	--	4/14/2012 9:00	0.0081	--
4/14/2012 10:00	0.0081	--	4/14/2012 10:00	0.0082	--	4/14/2012 10:00	0.0078	--
4/14/2012 11:00	0.0082	--	4/14/2012 11:00	0.0082	--	4/14/2012 11:00	0.0076	--
4/14/2012 12:00	0.0081	--	4/14/2012 12:00	0.0082	--	4/14/2012 12:00	0.0075	--
4/14/2012 13:00	0.0081	--	4/14/2012 13:00	0.0080	--	4/14/2012 13:00	0.0078	--
4/14/2012 14:00	0.0081	--	4/14/2012 14:00	0.0081	--	4/14/2012 14:00	0.0075	--
4/14/2012 15:00	0.0081	--	4/14/2012 15:00	0.0081	--	4/14/2012 15:00	0.0074	--
4/14/2012 16:00	0.0081	--	4/14/2012 16:00	0.0082	--	4/14/2012 16:00	0.0070	--
4/14/2012 17:00	0.0081	--	4/14/2012 17:00	0.0081	--	4/14/2012 17:00	0.0072	--
4/14/2012 18:00	0.0082	--	4/14/2012 18:00	0.0082	--	4/14/2012 18:00	0.0074	--
4/14/2012 19:00	0.0081	--	4/14/2012 19:00	0.0082	--	4/14/2012 19:00	0.0078	--
4/14/2012 20:00	0.0081	--	4/14/2012 20:00	0.0082	--	4/14/2012 20:00	0.0078	--
4/14/2012 21:00	0.0081	--	4/14/2012 21:00	0.0081	--	4/14/2012 21:00	0.0074	--
4/14/2012 22:00	0.0081	--	4/14/2012 22:00	0.0082	--	4/14/2012 22:00	0.0078	--
4/14/2012 23:00	0.0082	0.0083	4/14/2012 23:00	0.0082	0.0082	4/14/2012 23:00	0.0077	0.0075
4/15/2012 0:00	0.0081	--	4/15/2012 0:00	0.0082	--	4/15/2012 0:00	0.0074	--
4/15/2012 1:00	0.0081	--	4/15/2012 1:00	0.0082	--	4/15/2012 1:00	0.0077	--
4/15/2012 2:00	0.0082	--	4/15/2012 2:00	0.0082	--	4/15/2012 2:00	0.0074	--
4/15/2012 3:00	0.0082	--	4/15/2012 3:00	0.0082	--	4/15/2012 3:00	0.0077	--
4/15/2012 4:00	0.0081	--	4/15/2012 4:00	0.0082	--	4/15/2012 4:00	0.0077	--

Package Boiler No. 1 EPN 81BF01			Package Boiler No. 2 EPN 50BF02			Package Boiler No. 3 EPN 50BF03		
Date	NO_X (lb/MMBtu)	NO_X (lb/MMBtu) 30-day Rolling Average	Date	NO_X (lb/MMBtu)	NO_X (lb/MMBtu) 30-day Rolling Average	Date	NO_X (lb/MMBtu)	NO_X (lb/MMBtu) 30-day Rolling Average
4/15/2012 5:00	0.0085	--	4/15/2012 5:00	0.0084	--	4/15/2012 5:00	0.0062	--
4/15/2012 6:00	0.0082	--	4/15/2012 6:00	0.0082	--	4/15/2012 6:00	0.0078	--
4/15/2012 7:00	0.0082	--	4/15/2012 7:00	0.0082	--	4/15/2012 7:00	0.0076	--
4/15/2012 8:00	0.0082	--	4/15/2012 8:00	0.0082	--	4/15/2012 8:00	0.0077	--
4/15/2012 9:00	0.0082	--	4/15/2012 9:00	0.0082	--	4/15/2012 9:00	0.0070	--
4/15/2012 10:00	0.0081	--	4/15/2012 10:00	0.0082	--	4/15/2012 10:00	0.0080	--
4/15/2012 11:00	0.0080	--	4/15/2012 11:00	0.0081	--	4/15/2012 11:00	0.0079	--
4/15/2012 12:00	0.0083	--	4/15/2012 12:00	0.0082	--	4/15/2012 12:00	0.0077	--
4/15/2012 13:00	0.0080	--	4/15/2012 13:00	0.0081	--	4/15/2012 13:00	0.0071	--
4/15/2012 14:00	0.0081	--	4/15/2012 14:00	0.0081	--	4/15/2012 14:00	0.0077	--
4/15/2012 15:00	0.0081	--	4/15/2012 15:00	0.0081	--	4/15/2012 15:00	0.0071	--
4/15/2012 16:00	0.0084	--	4/15/2012 16:00	0.0085	--	4/15/2012 16:00	0.0081	--
4/15/2012 17:00	0.0080	--	4/15/2012 17:00	0.0080	--	4/15/2012 17:00	0.0073	--
4/15/2012 18:00	0.0081	--	4/15/2012 18:00	0.0081	--	4/15/2012 18:00	0.0072	--
4/15/2012 19:00	0.0081	--	4/15/2012 19:00	0.0082	--	4/15/2012 19:00	0.0076	--
4/15/2012 20:00	0.0082	--	4/15/2012 20:00	0.0081	--	4/15/2012 20:00	0.0075	--
4/15/2012 21:00	0.0082	--	4/15/2012 21:00	0.0083	--	4/15/2012 21:00	0.0077	--
4/15/2012 22:00	0.0081	--	4/15/2012 22:00	0.0082	--	4/15/2012 22:00	0.0076	--
4/15/2012 23:00	0.0081	0.0083	4/15/2012 23:00	0.0082	0.0082	4/15/2012 23:00	0.0077	0.0075
4/16/2012 0:00	0.0082	--	4/16/2012 0:00	0.0082	--	4/16/2012 0:00	0.0074	--
4/16/2012 1:00	0.0083	--	4/16/2012 1:00	0.0084	--	4/16/2012 1:00	0.0074	--
4/16/2012 2:00	0.0081	--	4/16/2012 2:00	0.0083	--	4/16/2012 2:00	0.0076	--
4/16/2012 3:00	0.0081	--	4/16/2012 3:00	0.0081	--	4/16/2012 3:00	0.0076	--
4/16/2012 4:00	0.0081	--	4/16/2012 4:00	0.0081	--	4/16/2012 4:00	0.0076	--
4/16/2012 5:00	0.0084	--	4/16/2012 5:00	0.0079	--	4/16/2012 5:00	0.0087	--
4/16/2012 6:00	0.0082	--	4/16/2012 6:00	0.0083	--	4/16/2012 6:00	0.0072	--
4/16/2012 7:00	0.0082	--	4/16/2012 7:00	0.0084	--	4/16/2012 7:00	0.0076	--
4/16/2012 8:00	0.0081	--	4/16/2012 8:00	0.0083	--	4/16/2012 8:00	0.0072	--
4/16/2012 9:00	0.0081	--	4/16/2012 9:00	0.0081	--	4/16/2012 9:00	0.0076	--
4/16/2012 10:00	0.0082	--	4/16/2012 10:00	0.0083	--	4/16/2012 10:00	0.0080	--
4/16/2012 11:00	0.0080	--	4/16/2012 11:00	0.0079	--	4/16/2012 11:00	0.0070	--
4/16/2012 12:00	0.0085	--	4/16/2012 12:00	0.0083	--	4/16/2012 12:00	0.0074	--
4/16/2012 13:00	0.0077	--	4/16/2012 13:00	0.0082	--	4/16/2012 13:00	0.0044	--
4/16/2012 14:00	0.0081	--	4/16/2012 14:00	0.0082	--	4/16/2012 14:00	0.0063	--
4/16/2012 15:00	0.0082	--	4/16/2012 15:00	0.0082	--	4/16/2012 15:00	0.0072	--
4/16/2012 16:00	0.0082	--	4/16/2012 16:00	0.0083	--	4/16/2012 16:00	0.0077	--
4/16/2012 17:00	0.0082	--	4/16/2012 17:00	0.0082	--	4/16/2012 17:00	0.0070	--
4/16/2012 18:00	0.0087	--	4/16/2012 18:00	0.0083	--	4/16/2012 18:00	0.0083	--
4/16/2012 19:00	0.0084	--	4/16/2012 19:00	0.0092	--	4/16/2012 19:00	0.0083	--
4/16/2012 20:00	0.0082	--	4/16/2012 20:00	0.0083	--	4/16/2012 20:00	0.0077	--
4/16/2012 21:00	0.0081	--	4/16/2012 21:00	0.0081	--	4/16/2012 21:00	0.0079	--

Package Boiler No. 1 EPN 81BF01			Package Boiler No. 2 EPN 50BF02			Package Boiler No. 3 EPN 50BF03		
Date	NO_X (lb/MMBtu)	NO_X (lb/MMBtu) 30-day Rolling Average	Date	NO_X (lb/MMBtu)	NO_X (lb/MMBtu) 30-day Rolling Average	Date	NO_X (lb/MMBtu)	NO_X (lb/MMBtu) 30-day Rolling Average
4/16/2012 22:00	0.0082	--	4/16/2012 22:00	0.0083	--	4/16/2012 22:00	0.0072	--
4/16/2012 23:00	0.0081	0.0083	4/16/2012 23:00	0.0082	0.0082	4/16/2012 23:00	0.0070	0.0075
4/17/2012 0:00	0.0082	--	4/17/2012 0:00	0.0082	--	4/17/2012 0:00	0.0077	--
4/17/2012 1:00	0.0081	--	4/17/2012 1:00	0.0082	--	4/17/2012 1:00	0.0077	--
4/17/2012 2:00	0.0081	--	4/17/2012 2:00	0.0083	--	4/17/2012 2:00	0.0084	--
4/17/2012 3:00	0.0086	--	4/17/2012 3:00	0.0085	--	4/17/2012 3:00	0.0082	--
4/17/2012 4:00	0.0066	--	4/17/2012 4:00	0.0081	--	4/17/2012 4:00	0.0054	--
4/17/2012 5:00	0.0083	--	4/17/2012 5:00	0.0086	--	4/17/2012 5:00	0.0077	--
4/17/2012 6:00	0.0092	--	4/17/2012 6:00	0.0070	--	4/17/2012 6:00	0.0094	--
4/17/2012 7:00	0.0084	--	4/17/2012 7:00	SOURCE DOWN	--	4/17/2012 7:00	0.0087	--
4/17/2012 8:00	0.0085	--	4/17/2012 8:00	SOURCE DOWN	--	4/17/2012 8:00	0.0079	--
4/17/2012 9:00	0.0086	--	4/17/2012 9:00	SOURCE DOWN	--	4/17/2012 9:00	0.0084	--
4/17/2012 10:00	0.0088	--	4/17/2012 10:00	SOURCE DOWN	--	4/17/2012 10:00	0.0087	--
4/17/2012 11:00	0.0088	--	4/17/2012 11:00	SOURCE DOWN	--	4/17/2012 11:00	0.0080	--
4/17/2012 12:00	0.0089	--	4/17/2012 12:00	SOURCE DOWN	--	4/17/2012 12:00	0.0086	--
4/17/2012 13:00	0.0086	--	4/17/2012 13:00	SOURCE DOWN	--	4/17/2012 13:00	0.0080	--
4/17/2012 14:00	0.0111	--	4/17/2012 14:00	SOURCE DOWN	--	4/17/2012 14:00	0.0114	--
4/17/2012 15:00	0.0092	--	4/17/2012 15:00	SOURCE DOWN	--	4/17/2012 15:00	0.0093	--
4/17/2012 16:00	0.0081	--	4/17/2012 16:00	SOURCE DOWN	--	4/17/2012 16:00	0.0088	--
4/17/2012 17:00	0.0083	--	4/17/2012 17:00	SOURCE DOWN	--	4/17/2012 17:00	0.0093	--
4/17/2012 18:00	0.0083	--	4/17/2012 18:00	SOURCE DOWN	--	4/17/2012 18:00	0.0088	--
4/17/2012 19:00	0.0085	--	4/17/2012 19:00	SOURCE DOWN	--	4/17/2012 19:00	0.0090	--
4/17/2012 20:00	0.0085	--	4/17/2012 20:00	SOURCE DOWN	--	4/17/2012 20:00	0.0099	--
4/17/2012 21:00	0.0089	--	4/17/2012 21:00	SOURCE DOWN	--	4/17/2012 21:00	0.0107	--
4/17/2012 22:00	0.0086	--	4/17/2012 22:00	SOURCE DOWN	--	4/17/2012 22:00	0.0101	--
4/17/2012 23:00	0.0086	0.0083	4/17/2012 23:00	SOURCE DOWN	0.0080	4/17/2012 23:00	0.0097	0.0076
4/18/2012 0:00	0.0085	--	4/18/2012 0:00	SOURCE DOWN	--	4/18/2012 0:00	0.0096	--
4/18/2012 1:00	0.0083	--	4/18/2012 1:00	SOURCE DOWN	--	4/18/2012 1:00	0.0101	--
4/18/2012 2:00	0.0086	--	4/18/2012 2:00	SOURCE DOWN	--	4/18/2012 2:00	0.0192	--
4/18/2012 3:00	0.0083	--	4/18/2012 3:00	SOURCE DOWN	--	4/18/2012 3:00	0.0099	--
4/18/2012 4:00	0.0086	--	4/18/2012 4:00	SOURCE DOWN	--	4/18/2012 4:00	0.0103	--
4/18/2012 5:00	0.0089	--	4/18/2012 5:00	SOURCE DOWN	--	4/18/2012 5:00	0.0123	--
4/18/2012 6:00	0.0448	--	4/18/2012 6:00	SOURCE DOWN	--	4/18/2012 6:00	0.0158	--
4/18/2012 7:00	0.0084	--	4/18/2012 7:00	SOURCE DOWN	--	4/18/2012 7:00	0.0107	--
4/18/2012 8:00	0.0085	--	4/18/2012 8:00	SOURCE DOWN	--	4/18/2012 8:00	0.0089	--
4/18/2012 9:00	0.0085	--	4/18/2012 9:00	SOURCE DOWN	--	4/18/2012 9:00	0.0087	--
4/18/2012 10:00	0.0086	--	4/18/2012 10:00	SOURCE DOWN	--	4/18/2012 10:00	0.0093	--
4/18/2012 11:00	0.0086	--	4/18/2012 11:00	SOURCE DOWN	--	4/18/2012 11:00	0.0093	--
4/18/2012 12:00	0.0085	--	4/18/2012 12:00	SOURCE DOWN	--	4/18/2012 12:00	0.0088	--
4/18/2012 13:00	0.0086	--	4/18/2012 13:00	SOURCE DOWN	--	4/18/2012 13:00	0.0089	--
4/18/2012 14:00	0.0083	--	4/18/2012 14:00	SOURCE DOWN	--	4/18/2012 14:00	0.0094	--

Package Boiler No. 1 EPN 81BF01			Package Boiler No. 2 EPN 50BF02			Package Boiler No. 3 EPN 50BF03		
Date	NO_X (lb/MMBtu)	NO_X (lb/MMBtu) 30-day Rolling Average	Date	NO_X (lb/MMBtu)	NO_X (lb/MMBtu) 30-day Rolling Average	Date	NO_X (lb/MMBtu)	NO_X (lb/MMBtu) 30-day Rolling Average
4/18/2012 15:00	0.0084	--	4/18/2012 15:00	SOURCE DOWN	--	4/18/2012 15:00	0.0093	--
4/18/2012 16:00	0.0082	--	4/18/2012 16:00	SOURCE DOWN	--	4/18/2012 16:00	0.0092	--
4/18/2012 17:00	0.0083	--	4/18/2012 17:00	SOURCE DOWN	--	4/18/2012 17:00	0.0197	--
4/18/2012 18:00	0.0082	--	4/18/2012 18:00	SOURCE DOWN	--	4/18/2012 18:00	0.0101	--
4/18/2012 19:00	0.0082	--	4/18/2012 19:00	SOURCE DOWN	--	4/18/2012 19:00	0.0093	--
4/18/2012 20:00	0.0084	--	4/18/2012 20:00	SOURCE DOWN	--	4/18/2012 20:00	0.0091	--
4/18/2012 21:00	0.0084	--	4/18/2012 21:00	SOURCE DOWN	--	4/18/2012 21:00	0.0098	--
4/18/2012 22:00	0.0082	--	4/18/2012 22:00	SOURCE DOWN	--	4/18/2012 22:00	0.0093	--
4/18/2012 23:00	0.0082	0.0083	4/18/2012 23:00	SOURCE DOWN	0.0077	4/18/2012 23:00	0.0096	0.0077
4/19/2012 0:00	0.0084	--	4/19/2012 0:00	SOURCE DOWN	--	4/19/2012 0:00	0.0097	--
4/19/2012 1:00	0.0082	--	4/19/2012 1:00	SOURCE DOWN	--	4/19/2012 1:00	0.0106	--
4/19/2012 2:00	0.0082	--	4/19/2012 2:00	SOURCE DOWN	--	4/19/2012 2:00	0.0105	--
4/19/2012 3:00	0.0084	--	4/19/2012 3:00	SOURCE DOWN	--	4/19/2012 3:00	0.0098	--
4/19/2012 4:00	0.0084	--	4/19/2012 4:00	SOURCE DOWN	--	4/19/2012 4:00	0.0085	--
4/19/2012 5:00	0.0086	--	4/19/2012 5:00	SOURCE DOWN	--	4/19/2012 5:00	0.0104	--
4/19/2012 6:00	0.0085	--	4/19/2012 6:00	SOURCE DOWN	--	4/19/2012 6:00	0.0083	--
4/19/2012 7:00	0.0085	--	4/19/2012 7:00	SOURCE DOWN	--	4/19/2012 7:00	0.0101	--
4/19/2012 8:00	0.0085	--	4/19/2012 8:00	SOURCE DOWN	--	4/19/2012 8:00	0.0096	--
4/19/2012 9:00	0.0084	--	4/19/2012 9:00	0.0501	--	4/19/2012 9:00	0.0095	--
4/19/2012 10:00	0.0084	--	4/19/2012 10:00	0.0556	--	4/19/2012 10:00	0.0088	--
4/19/2012 11:00	0.0085	--	4/19/2012 11:00	0.0509	--	4/19/2012 11:00	0.0093	--
4/19/2012 12:00	0.0084	--	4/19/2012 12:00	0.0417	--	4/19/2012 12:00	0.0098	--
4/19/2012 13:00	0.0084	--	4/19/2012 13:00	0.0186	--	4/19/2012 13:00	0.0091	--
4/19/2012 14:00	0.0085	--	4/19/2012 14:00	0.0148	--	4/19/2012 14:00	0.0087	--
4/19/2012 15:00	0.0043	--	4/19/2012 15:00	0.0067	--	4/19/2012 15:00	0.0039	--
4/19/2012 16:00	0.0060	--	4/19/2012 16:00	0.0082	--	4/19/2012 16:00	0.0066	--
4/19/2012 17:00	0.0057	--	4/19/2012 17:00	0.0074	--	4/19/2012 17:00	0.0072	--
4/19/2012 18:00	0.0058	--	4/19/2012 18:00	0.0074	--	4/19/2012 18:00	0.0063	--
4/19/2012 19:00	0.0059	--	4/19/2012 19:00	0.0074	--	4/19/2012 19:00	0.0071	--
4/19/2012 20:00	0.0059	--	4/19/2012 20:00	0.0075	--	4/19/2012 20:00	0.0069	--
4/19/2012 21:00	0.0056	--	4/19/2012 21:00	0.0071	--	4/19/2012 21:00	0.0064	--
4/19/2012 22:00	0.0057	--	4/19/2012 22:00	0.0073	--	4/19/2012 22:00	0.0072	--
4/19/2012 23:00	0.0056	0.0083	4/19/2012 23:00	0.0071	0.0079	4/19/2012 23:00	0.0062	0.0077
4/20/2012 0:00	0.0052	--	4/20/2012 0:00	0.0066	--	4/20/2012 0:00	0.0058	--
4/20/2012 1:00	0.0052	--	4/20/2012 1:00	0.0066	--	4/20/2012 1:00	0.0062	--
4/20/2012 2:00	0.0052	--	4/20/2012 2:00	0.0067	--	4/20/2012 2:00	0.0067	--
4/20/2012 3:00	0.0053	--	4/20/2012 3:00	0.0067	--	4/20/2012 3:00	0.0063	--
4/20/2012 4:00	0.0052	--	4/20/2012 4:00	0.0066	--	4/20/2012 4:00	0.0062	--
4/20/2012 5:00	0.0056	--	4/20/2012 5:00	0.0074	--	4/20/2012 5:00	0.0065	--
4/20/2012 6:00	0.0052	--	4/20/2012 6:00	0.0068	--	4/20/2012 6:00	0.0062	--
4/20/2012 7:00	0.0053	--	4/20/2012 7:00	0.0067	--	4/20/2012 7:00	0.0069	--

Package Boiler No. 1 EPN 81BF01			Package Boiler No. 2 EPN 50BF02			Package Boiler No. 3 EPN 50BF03		
Date	NO_X (lb/MMBtu)	NO_X (lb/MMBtu) 30-day Rolling Average	Date	NO_X (lb/MMBtu)	NO_X (lb/MMBtu) 30-day Rolling Average	Date	NO_X (lb/MMBtu)	NO_X (lb/MMBtu) 30-day Rolling Average
4/20/2012 8:00	0.0053	--	4/20/2012 8:00	0.0067	--	4/20/2012 8:00	0.0067	--
4/20/2012 9:00	0.0052	--	4/20/2012 9:00	0.0068	--	4/20/2012 9:00	0.0067	--
4/20/2012 10:00	0.0052	--	4/20/2012 10:00	0.0067	--	4/20/2012 10:00	0.0066	--
4/20/2012 11:00	0.0053	--	4/20/2012 11:00	0.0066	--	4/20/2012 11:00	0.0062	--
4/20/2012 12:00	0.0052	--	4/20/2012 12:00	0.0066	--	4/20/2012 12:00	0.0070	--
4/20/2012 13:00	0.0054	--	4/20/2012 13:00	0.0068	--	4/20/2012 13:00	0.0062	--
4/20/2012 14:00	0.0056	--	4/20/2012 14:00	0.0075	--	4/20/2012 14:00	0.0068	--
4/20/2012 15:00	0.0058	--	4/20/2012 15:00	0.0077	--	4/20/2012 15:00	0.0043	--
4/20/2012 16:00	0.0053	--	4/20/2012 16:00	0.0068	--	4/20/2012 16:00	0.0053	--
4/20/2012 17:00	0.0053	--	4/20/2012 17:00	0.0067	--	4/20/2012 17:00	0.0065	--
4/20/2012 18:00	0.0053	--	4/20/2012 18:00	0.0066	--	4/20/2012 18:00	0.0061	--
4/20/2012 19:00	0.0053	--	4/20/2012 19:00	0.0068	--	4/20/2012 19:00	0.0067	--
4/20/2012 20:00	0.0053	--	4/20/2012 20:00	0.0069	--	4/20/2012 20:00	0.0061	--
4/20/2012 21:00	0.0051	--	4/20/2012 21:00	0.0066	--	4/20/2012 21:00	0.0066	--
4/20/2012 22:00	0.0054	--	4/20/2012 22:00	0.0071	--	4/20/2012 22:00	0.0064	--
4/20/2012 23:00	0.0053	0.0082	4/20/2012 23:00	0.0069	0.0079	4/20/2012 23:00	0.0069	0.0077
4/21/2012 0:00	0.0051	--	4/21/2012 0:00	0.0067	--	4/21/2012 0:00	0.0062	--
4/21/2012 1:00	0.0054	--	4/21/2012 1:00	0.0070	--	4/21/2012 1:00	0.0057	--
4/21/2012 2:00	0.0054	--	4/21/2012 2:00	0.0071	--	4/21/2012 2:00	0.0086	--
4/21/2012 3:00	0.0055	--	4/21/2012 3:00	0.0069	--	4/21/2012 3:00	0.0067	--
4/21/2012 4:00	0.0060	--	4/21/2012 4:00	0.0083	--	4/21/2012 4:00	0.0107	--
4/21/2012 5:00	0.0055	--	4/21/2012 5:00	0.0075	--	4/21/2012 5:00	0.0088	--
4/21/2012 6:00	0.0052	--	4/21/2012 6:00	0.0070	--	4/21/2012 6:00	0.0100	--
4/21/2012 7:00	0.0055	--	4/21/2012 7:00	0.0070	--	4/21/2012 7:00	0.0078	--
4/21/2012 8:00	0.0052	--	4/21/2012 8:00	0.0068	--	4/21/2012 8:00	0.0071	--
4/21/2012 9:00	0.0053	--	4/21/2012 9:00	0.0068	--	4/21/2012 9:00	0.0068	--
4/21/2012 10:00	0.0052	--	4/21/2012 10:00	0.0068	--	4/21/2012 10:00	0.0062	--
4/21/2012 11:00	0.0053	--	4/21/2012 11:00	0.0069	--	4/21/2012 11:00	0.0068	--
4/21/2012 12:00	0.0052	--	4/21/2012 12:00	0.0067	--	4/21/2012 12:00	0.0069	--
4/21/2012 13:00	0.0054	--	4/21/2012 13:00	0.0071	--	4/21/2012 13:00	0.0078	--
4/21/2012 14:00	0.0066	--	4/21/2012 14:00	0.0094	--	4/21/2012 14:00	0.0211	--
4/21/2012 15:00	0.0062	--	4/21/2012 15:00	0.0077	--	4/21/2012 15:00	0.0060	--
4/21/2012 16:00	0.0054	--	4/21/2012 16:00	0.0063	--	4/21/2012 16:00	0.0073	--
4/21/2012 17:00	0.0055	--	4/21/2012 17:00	0.0069	--	4/21/2012 17:00	0.0061	--
4/21/2012 18:00	0.0057	--	4/21/2012 18:00	0.0069	--	4/21/2012 18:00	0.0062	--
4/21/2012 19:00	0.0057	--	4/21/2012 19:00	0.0065	--	4/21/2012 19:00	0.0056	--
4/21/2012 20:00	0.0057	--	4/21/2012 20:00	0.0070	--	4/21/2012 20:00	0.0060	--
4/21/2012 21:00	0.0057	--	4/21/2012 21:00	0.0065	--	4/21/2012 21:00	0.0059	--
4/21/2012 22:00	0.0057	--	4/21/2012 22:00	0.0068	--	4/21/2012 22:00	0.0063	--
4/21/2012 23:00	0.0057	0.0080	4/21/2012 23:00	0.0069	0.0076	4/21/2012 23:00	0.0067	0.0076
4/22/2012 0:00	0.0058	--	4/22/2012 0:00	0.0066	--	4/22/2012 0:00	0.0060	--

Package Boiler No. 1 EPN 81BF01			Package Boiler No. 2 EPN 50BF02			Package Boiler No. 3 EPN 50BF03		
Date	NO_X (lb/MMBtu)	NO_X (lb/MMBtu) 30-day Rolling Average	Date	NO_X (lb/MMBtu)	NO_X (lb/MMBtu) 30-day Rolling Average	Date	NO_X (lb/MMBtu)	NO_X (lb/MMBtu) 30-day Rolling Average
4/22/2012 1:00	0.0057	--	4/22/2012 1:00	0.0074	--	4/22/2012 1:00	0.0055	--
4/22/2012 2:00	0.0056	--	4/22/2012 2:00	0.0072	--	4/22/2012 2:00	0.0061	--
4/22/2012 3:00	0.0057	--	4/22/2012 3:00	0.0069	--	4/22/2012 3:00	0.0060	--
4/22/2012 4:00	0.0058	--	4/22/2012 4:00	0.0069	--	4/22/2012 4:00	0.0057	--
4/22/2012 5:00	0.0061	--	4/22/2012 5:00	0.0068	--	4/22/2012 5:00	0.0053	--
4/22/2012 6:00	0.0058	--	4/22/2012 6:00	0.0069	--	4/22/2012 6:00	0.0057	--
4/22/2012 7:00	0.0059	--	4/22/2012 7:00	0.0067	--	4/22/2012 7:00	0.0065	--
4/22/2012 8:00	0.0061	--	4/22/2012 8:00	0.0065	--	4/22/2012 8:00	0.0067	--
4/22/2012 9:00	0.0067	--	4/22/2012 9:00	0.0063	--	4/22/2012 9:00	0.0073	--
4/22/2012 10:00	0.0063	--	4/22/2012 10:00	0.0060	--	4/22/2012 10:00	0.0063	--
4/22/2012 11:00	0.0060	--	4/22/2012 11:00	0.0068	--	4/22/2012 11:00	0.0064	--
4/22/2012 12:00	0.0058	--	4/22/2012 12:00	0.0070	--	4/22/2012 12:00	0.0061	--
4/22/2012 13:00	0.0056	--	4/22/2012 13:00	0.0084	--	4/22/2012 13:00	0.0060	--
4/22/2012 14:00	0.0059	--	4/22/2012 14:00	0.0068	--	4/22/2012 14:00	0.0062	--
4/22/2012 15:00	0.0058	--	4/22/2012 15:00	0.0097	--	4/22/2012 15:00	0.0067	--
4/22/2012 16:00	0.0057	--	4/22/2012 16:00	0.0067	--	4/22/2012 16:00	0.0069	--
4/22/2012 17:00	0.0056	--	4/22/2012 17:00	0.0063	--	4/22/2012 17:00	0.0068	--
4/22/2012 18:00	0.0056	--	4/22/2012 18:00	0.0060	--	4/22/2012 18:00	0.0066	--
4/22/2012 19:00	0.0057	--	4/22/2012 19:00	0.0063	--	4/22/2012 19:00	0.0063	--
4/22/2012 20:00	0.0056	--	4/22/2012 20:00	0.0069	--	4/22/2012 20:00	0.0060	--
4/22/2012 21:00	0.0057	--	4/22/2012 21:00	0.0066	--	4/22/2012 21:00	0.0057	--
4/22/2012 22:00	0.0058	--	4/22/2012 22:00	0.0065	--	4/22/2012 22:00	0.0060	--
4/22/2012 23:00	0.0061	0.0079	4/22/2012 23:00	0.0063	0.0076	4/22/2012 23:00	0.0067	0.0075
4/23/2012 0:00	0.0059	--	4/23/2012 0:00	0.0072	--	4/23/2012 0:00	0.0062	--
4/23/2012 1:00	0.0067	--	4/23/2012 1:00	0.0066	--	4/23/2012 1:00	0.0073	--
4/23/2012 2:00	0.0063	--	4/23/2012 2:00	0.0064	--	4/23/2012 2:00	0.0073	--
4/23/2012 3:00	0.0059	--	4/23/2012 3:00	0.0068	--	4/23/2012 3:00	0.0069	--
4/23/2012 4:00	0.0060	--	4/23/2012 4:00	0.0065	--	4/23/2012 4:00	0.0069	--
4/23/2012 5:00	0.0065	--	4/23/2012 5:00	0.0077	--	4/23/2012 5:00	0.0067	--
4/23/2012 6:00	0.0055	--	4/23/2012 6:00	0.0098	--	4/23/2012 6:00	0.0056	--
4/23/2012 7:00	DOWNTIME	--	4/23/2012 7:00	0.0145	--	4/23/2012 7:00	0.0053	--
4/23/2012 8:00	0.0069	--	4/23/2012 8:00	0.0067	--	4/23/2012 8:00	0.0077	--
4/23/2012 9:00	0.0066	--	4/23/2012 9:00	0.0066	--	4/23/2012 9:00	0.0072	--
4/23/2012 10:00	0.0069	--	4/23/2012 10:00	0.0060	--	4/23/2012 10:00	0.0074	--
4/23/2012 11:00	0.0066	--	4/23/2012 11:00	0.0067	--	4/23/2012 11:00	0.0073	--
4/23/2012 12:00	0.0065	--	4/23/2012 12:00	0.0076	--	4/23/2012 12:00	0.0070	--
4/23/2012 13:00	0.0066	--	4/23/2012 13:00	0.0071	--	4/23/2012 13:00	0.0072	--
4/23/2012 14:00	0.0064	--	4/23/2012 14:00	0.0061	--	4/23/2012 14:00	0.0070	--
4/23/2012 15:00	0.0063	--	4/23/2012 15:00	0.0052	--	4/23/2012 15:00	0.0066	--
4/23/2012 16:00	0.0066	--	4/23/2012 16:00	0.0058	--	4/23/2012 16:00	0.0076	--
4/23/2012 17:00	0.0066	--	4/23/2012 17:00	0.0073	--	4/23/2012 17:00	0.0072	--

Package Boiler No. 1 EPN 81BF01			Package Boiler No. 2 EPN 50BF02			Package Boiler No. 3 EPN 50BF03		
Date	NO_X (lb/MMBtu)	NO_X (lb/MMBtu) 30-day Rolling Average	Date	NO_X (lb/MMBtu)	NO_X (lb/MMBtu) 30-day Rolling Average	Date	NO_X (lb/MMBtu)	NO_X (lb/MMBtu) 30-day Rolling Average
4/23/2012 18:00	0.0069	--	4/23/2012 18:00	0.0068	--	4/23/2012 18:00	0.0071	--
4/23/2012 19:00	0.0070	--	4/23/2012 19:00	0.0065	--	4/23/2012 19:00	0.0071	--
4/23/2012 20:00	0.0071	--	4/23/2012 20:00	0.0062	--	4/23/2012 20:00	0.0079	--
4/23/2012 21:00	0.0066	--	4/23/2012 21:00	0.0061	--	4/23/2012 21:00	0.0070	--
4/23/2012 22:00	0.0058	--	4/23/2012 22:00	0.0045	--	4/23/2012 22:00	0.0051	--
4/23/2012 23:00	0.0069	0.0079	4/23/2012 23:00	0.0056	0.0076	4/23/2012 23:00	0.0070	0.0075
4/24/2012 0:00	0.0071	--	4/24/2012 0:00	0.0064	--	4/24/2012 0:00	0.0076	--
4/24/2012 1:00	0.0071	--	4/24/2012 1:00	0.0067	--	4/24/2012 1:00	0.0075	--
4/24/2012 2:00	0.0071	--	4/24/2012 2:00	0.0066	--	4/24/2012 2:00	0.0076	--
4/24/2012 3:00	0.0070	--	4/24/2012 3:00	0.0066	--	4/24/2012 3:00	0.0077	--
4/24/2012 4:00	0.0072	--	4/24/2012 4:00	0.0080	--	4/24/2012 4:00	0.0081	--
4/24/2012 5:00	0.0069	--	4/24/2012 5:00	0.0064	--	4/24/2012 5:00	0.0077	--
4/24/2012 6:00	0.0083	--	4/24/2012 6:00	0.0098	--	4/24/2012 6:00	0.0101	--
4/24/2012 7:00	0.0084	--	4/24/2012 7:00	0.0106	--	4/24/2012 7:00	0.0097	--
4/24/2012 8:00	0.0084	--	4/24/2012 8:00	0.0646	--	4/24/2012 8:00	0.0098	--
4/24/2012 9:00	0.0084	--	4/24/2012 9:00	0.0109	--	4/24/2012 9:00	0.0099	--
4/24/2012 10:00	0.0084	--	4/24/2012 10:00	0.0107	--	4/24/2012 10:00	0.0098	--
4/24/2012 11:00	0.0083	--	4/24/2012 11:00	0.0100	--	4/24/2012 11:00	0.0099	--
4/24/2012 12:00	0.0083	--	4/24/2012 12:00	0.0102	--	4/24/2012 12:00	0.0098	--
4/24/2012 13:00	0.0083	--	4/24/2012 13:00	0.0107	--	4/24/2012 13:00	0.0098	--
4/24/2012 14:00	0.0083	--	4/24/2012 14:00	0.0092	--	4/24/2012 14:00	0.0089	--
4/24/2012 15:00	0.0083	--	4/24/2012 15:00	0.0091	--	4/24/2012 15:00	0.0090	--
4/24/2012 16:00	0.0082	--	4/24/2012 16:00	0.0094	--	4/24/2012 16:00	0.0089	--
4/24/2012 17:00	0.0082	--	4/24/2012 17:00	0.0092	--	4/24/2012 17:00	0.0091	--
4/24/2012 18:00	0.0082	--	4/24/2012 18:00	0.0092	--	4/24/2012 18:00	0.0091	--
4/24/2012 19:00	0.0082	--	4/24/2012 19:00	0.0092	--	4/24/2012 19:00	0.0092	--
4/24/2012 20:00	0.0082	--	4/24/2012 20:00	0.0094	--	4/24/2012 20:00	0.0092	--
4/24/2012 21:00	0.0083	--	4/24/2012 21:00	0.0093	--	4/24/2012 21:00	0.0091	--
4/24/2012 22:00	0.0082	--	4/24/2012 22:00	0.0093	--	4/24/2012 22:00	0.0091	--
4/24/2012 23:00	0.0082	0.0079	4/24/2012 23:00	0.0096	0.0077	4/24/2012 23:00	0.0090	0.0076
4/25/2012 0:00	0.0082	--	4/25/2012 0:00	0.0092	--	4/25/2012 0:00	0.0091	--
4/25/2012 1:00	0.0083	--	4/25/2012 1:00	0.0092	--	4/25/2012 1:00	0.0091	--
4/25/2012 2:00	0.0082	--	4/25/2012 2:00	0.0095	--	4/25/2012 2:00	0.0091	--
4/25/2012 3:00	0.0083	--	4/25/2012 3:00	0.0093	--	4/25/2012 3:00	0.0091	--
4/25/2012 4:00	0.0082	--	4/25/2012 4:00	0.0097	--	4/25/2012 4:00	0.0089	--
4/25/2012 5:00	0.0086	--	4/25/2012 5:00	0.0093	--	4/25/2012 5:00	0.0091	--
4/25/2012 6:00	0.0085	--	4/25/2012 6:00	0.0096	--	4/25/2012 6:00	0.0091	--
4/25/2012 7:00	0.0084	--	4/25/2012 7:00	0.0096	--	4/25/2012 7:00	0.0089	--
4/25/2012 8:00	0.0084	--	4/25/2012 8:00	0.0092	--	4/25/2012 8:00	0.0091	--
4/25/2012 9:00	0.0085	--	4/25/2012 9:00	0.0097	--	4/25/2012 9:00	0.0092	--
4/25/2012 10:00	0.0084	--	4/25/2012 10:00	0.0094	--	4/25/2012 10:00	0.0093	--

Package Boiler No. 1 EPN 81BF01			Package Boiler No. 2 EPN 50BF02			Package Boiler No. 3 EPN 50BF03		
Date	NO_X (lb/MMBtu)	NO_X (lb/MMBtu) 30-day Rolling Average	Date	NO_X (lb/MMBtu)	NO_X (lb/MMBtu) 30-day Rolling Average	Date	NO_X (lb/MMBtu)	NO_X (lb/MMBtu) 30-day Rolling Average
4/25/2012 11:00	0.0084	--	4/25/2012 11:00	0.0094	--	4/25/2012 11:00	0.0092	--
4/25/2012 12:00	0.0082	--	4/25/2012 12:00	0.0097	--	4/25/2012 12:00	0.0092	--
4/25/2012 13:00	0.0083	--	4/25/2012 13:00	0.0093	--	4/25/2012 13:00	0.0092	--
4/25/2012 14:00	0.0082	--	4/25/2012 14:00	0.0090	--	4/25/2012 14:00	0.0091	--
4/25/2012 15:00	0.0084	--	4/25/2012 15:00	0.0093	--	4/25/2012 15:00	0.0092	--
4/25/2012 16:00	0.0082	--	4/25/2012 16:00	0.0095	--	4/25/2012 16:00	0.0091	--
4/25/2012 17:00	0.0081	--	4/25/2012 17:00	0.0093	--	4/25/2012 17:00	0.0089	--
4/25/2012 18:00	0.0082	--	4/25/2012 18:00	0.0092	--	4/25/2012 18:00	0.0090	--
4/25/2012 19:00	0.0082	--	4/25/2012 19:00	0.0092	--	4/25/2012 19:00	0.0090	--
4/25/2012 20:00	0.0082	--	4/25/2012 20:00	0.0093	--	4/25/2012 20:00	0.0091	--
4/25/2012 21:00	0.0082	--	4/25/2012 21:00	0.0093	--	4/25/2012 21:00	0.0092	--
4/25/2012 22:00	0.0083	--	4/25/2012 22:00	0.0094	--	4/25/2012 22:00	0.0092	--
4/25/2012 23:00	0.0083	0.0079	4/25/2012 23:00	0.0093	0.0077	4/25/2012 23:00	0.0092	0.0076
4/26/2012 0:00	0.0084	--	4/26/2012 0:00	0.0093	--	4/26/2012 0:00	0.0092	--
4/26/2012 1:00	0.0082	--	4/26/2012 1:00	0.0094	--	4/26/2012 1:00	0.0091	--
4/26/2012 2:00	0.0083	--	4/26/2012 2:00	0.0094	--	4/26/2012 2:00	0.0092	--
4/26/2012 3:00	0.0083	--	4/26/2012 3:00	0.0091	--	4/26/2012 3:00	0.0091	--
4/26/2012 4:00	0.0083	--	4/26/2012 4:00	0.0096	--	4/26/2012 4:00	0.0092	--
4/26/2012 5:00	0.0085	--	4/26/2012 5:00	0.0086	--	4/26/2012 5:00	0.0094	--
4/26/2012 6:00	0.0082	--	4/26/2012 6:00	0.0094	--	4/26/2012 6:00	0.0091	--
4/26/2012 7:00	0.0084	--	4/26/2012 7:00	0.0097	--	4/26/2012 7:00	0.0091	--
4/26/2012 8:00	0.0083	--	4/26/2012 8:00	0.0096	--	4/26/2012 8:00	0.0091	--
4/26/2012 9:00	0.0082	--	4/26/2012 9:00	0.0094	--	4/26/2012 9:00	0.0090	--
4/26/2012 10:00	0.0083	--	4/26/2012 10:00	0.0091	--	4/26/2012 10:00	0.0092	--
4/26/2012 11:00	0.0084	--	4/26/2012 11:00	0.0097	--	4/26/2012 11:00	0.0094	--
4/26/2012 12:00	0.0083	--	4/26/2012 12:00	0.0096	--	4/26/2012 12:00	0.0092	--
4/26/2012 13:00	0.0083	--	4/26/2012 13:00	0.0093	--	4/26/2012 13:00	0.0091	--
4/26/2012 14:00	0.0084	--	4/26/2012 14:00	0.0095	--	4/26/2012 14:00	0.0092	--
4/26/2012 15:00	0.0082	--	4/26/2012 15:00	0.0093	--	4/26/2012 15:00	0.0090	--
4/26/2012 16:00	0.0082	--	4/26/2012 16:00	0.0097	--	4/26/2012 16:00	0.0091	--
4/26/2012 17:00	0.0082	--	4/26/2012 17:00	0.0092	--	4/26/2012 17:00	0.0090	--
4/26/2012 18:00	0.0087	--	4/26/2012 18:00	0.0096	--	4/26/2012 18:00	0.0096	--
4/26/2012 19:00	0.0082	--	4/26/2012 19:00	0.0091	--	4/26/2012 19:00	0.0088	--
4/26/2012 20:00	0.0081	--	4/26/2012 20:00	0.0090	--	4/26/2012 20:00	0.0090	--
4/26/2012 21:00	0.0082	--	4/26/2012 21:00	0.0092	--	4/26/2012 21:00	0.0090	--
4/26/2012 22:00	0.0082	--	4/26/2012 22:00	0.0093	--	4/26/2012 22:00	0.0091	--
4/26/2012 23:00	0.0082	0.0079	4/26/2012 23:00	0.0093	0.0078	4/26/2012 23:00	0.0091	0.0077
4/27/2012 0:00	0.0083	--	4/27/2012 0:00	0.0094	--	4/27/2012 0:00	0.0091	--
4/27/2012 1:00	0.0083	--	4/27/2012 1:00	0.0094	--	4/27/2012 1:00	0.0091	--
4/27/2012 2:00	0.0083	--	4/27/2012 2:00	0.0094	--	4/27/2012 2:00	0.0092	--
4/27/2012 3:00	0.0083	--	4/27/2012 3:00	0.0095	--	4/27/2012 3:00	0.0091	--

Package Boiler No. 1 EPN 81BF01			Package Boiler No. 2 EPN 50BF02			Package Boiler No. 3 EPN 50BF03		
Date	NO_X (lb/MMBtu)	NO_X (lb/MMBtu) 30-day Rolling Average	Date	NO_X (lb/MMBtu)	NO_X (lb/MMBtu) 30-day Rolling Average	Date	NO_X (lb/MMBtu)	NO_X (lb/MMBtu) 30-day Rolling Average
4/27/2012 4:00	0.0084	--	4/27/2012 4:00	0.0094	--	4/27/2012 4:00	0.0092	--
4/27/2012 5:00	0.0086	--	4/27/2012 5:00	0.0105	--	4/27/2012 5:00	0.0095	--
4/27/2012 6:00	0.0083	--	4/27/2012 6:00	0.0095	--	4/27/2012 6:00	0.0091	--
4/27/2012 7:00	0.0084	--	4/27/2012 7:00	0.0097	--	4/27/2012 7:00	0.0093	--
4/27/2012 8:00	0.0084	--	4/27/2012 8:00	0.0095	--	4/27/2012 8:00	0.0092	--
4/27/2012 9:00	0.0083	--	4/27/2012 9:00	0.0093	--	4/27/2012 9:00	0.0092	--
4/27/2012 10:00	0.0084	--	4/27/2012 10:00	0.0094	--	4/27/2012 10:00	0.0093	--
4/27/2012 11:00	0.0084	--	4/27/2012 11:00	0.0093	--	4/27/2012 11:00	0.0092	--
4/27/2012 12:00	0.0085	--	4/27/2012 12:00	0.0095	--	4/27/2012 12:00	0.0094	--
4/27/2012 13:00	0.0083	--	4/27/2012 13:00	0.0096	--	4/27/2012 13:00	0.0092	--
4/27/2012 14:00	0.0083	--	4/27/2012 14:00	0.0094	--	4/27/2012 14:00	0.0091	--
4/27/2012 15:00	0.0083	--	4/27/2012 15:00	0.0092	--	4/27/2012 15:00	0.0092	--
4/27/2012 16:00	0.0082	--	4/27/2012 16:00	0.0092	--	4/27/2012 16:00	0.0089	--
4/27/2012 17:00	0.0085	--	4/27/2012 17:00	0.0093	--	4/27/2012 17:00	0.0093	--
4/27/2012 18:00	0.0071	--	4/27/2012 18:00	0.0032	--	4/27/2012 18:00	0.0057	--
4/27/2012 19:00	0.0079	--	4/27/2012 19:00	0.0077	--	4/27/2012 19:00	0.0088	--
4/27/2012 20:00	0.0083	--	4/27/2012 20:00	0.0092	--	4/27/2012 20:00	0.0092	--
4/27/2012 21:00	0.0083	--	4/27/2012 21:00	0.0093	--	4/27/2012 21:00	0.0092	--
4/27/2012 22:00	0.0083	--	4/27/2012 22:00	0.0094	--	4/27/2012 22:00	0.0092	--
4/27/2012 23:00	0.0083	0.0079	4/27/2012 23:00	0.0092	0.0078	4/27/2012 23:00	0.0091	0.0078
4/28/2012 0:00	0.0083	--	4/28/2012 0:00	0.0092	--	4/28/2012 0:00	0.0091	--
4/28/2012 1:00	0.0083	--	4/28/2012 1:00	0.0091	--	4/28/2012 1:00	0.0091	--
4/28/2012 2:00	0.0083	--	4/28/2012 2:00	0.0093	--	4/28/2012 2:00	0.0092	--
4/28/2012 3:00	0.0083	--	4/28/2012 3:00	0.0094	--	4/28/2012 3:00	0.0091	--
4/28/2012 4:00	0.0083	--	4/28/2012 4:00	0.0096	--	4/28/2012 4:00	0.0088	--
4/28/2012 5:00	0.0087	--	4/28/2012 5:00	0.0088	--	4/28/2012 5:00	0.0095	--
4/28/2012 6:00	0.0083	--	4/28/2012 6:00	0.0093	--	4/28/2012 6:00	0.0092	--
4/28/2012 7:00	0.0084	--	4/28/2012 7:00	0.0098	--	4/28/2012 7:00	0.0092	--
4/28/2012 8:00	0.0083	--	4/28/2012 8:00	0.0096	--	4/28/2012 8:00	0.0088	--
4/28/2012 9:00	0.0085	--	4/28/2012 9:00	0.0095	--	4/28/2012 9:00	0.0096	--
4/28/2012 10:00	0.0084	--	4/28/2012 10:00	0.0096	--	4/28/2012 10:00	0.0093	--
4/28/2012 11:00	0.0083	--	4/28/2012 11:00	0.0095	--	4/28/2012 11:00	0.0091	--
4/28/2012 12:00	0.0084	--	4/28/2012 12:00	0.0096	--	4/28/2012 12:00	0.0093	--
4/28/2012 13:00	0.0084	--	4/28/2012 13:00	0.0094	--	4/28/2012 13:00	0.0092	--
4/28/2012 14:00	0.0082	--	4/28/2012 14:00	0.0093	--	4/28/2012 14:00	0.0090	--
4/28/2012 15:00	0.0084	--	4/28/2012 15:00	0.0095	--	4/28/2012 15:00	0.0092	--
4/28/2012 16:00	0.0083	--	4/28/2012 16:00	0.0093	--	4/28/2012 16:00	0.0091	--
4/28/2012 17:00	0.0082	--	4/28/2012 17:00	0.0093	--	4/28/2012 17:00	0.0090	--
4/28/2012 18:00	0.0082	--	4/28/2012 18:00	0.0093	--	4/28/2012 18:00	0.0091	--
4/28/2012 19:00	0.0082	--	4/28/2012 19:00	0.0091	--	4/28/2012 19:00	0.0091	--
4/28/2012 20:00	0.0083	--	4/28/2012 20:00	0.0093	--	4/28/2012 20:00	0.0091	--

Package Boiler No. 1 EPN 81BF01			Package Boiler No. 2 EPN 50BF02			Package Boiler No. 3 EPN 50BF03		
Date	NO_X (lb/MMBtu)	NO_X (lb/MMBtu) 30-day Rolling Average	Date	NO_X (lb/MMBtu)	NO_X (lb/MMBtu) 30-day Rolling Average	Date	NO_X (lb/MMBtu)	NO_X (lb/MMBtu) 30-day Rolling Average
4/28/2012 21:00	0.0083	--	4/28/2012 21:00	0.0094	--	4/28/2012 21:00	0.0091	--
4/28/2012 22:00	0.0082	--	4/28/2012 22:00	0.0092	--	4/28/2012 22:00	0.0091	--
4/28/2012 23:00	0.0079	0.0079	4/28/2012 23:00	0.0071	0.0079	4/28/2012 23:00	0.0064	0.0078
4/29/2012 0:00	0.0082	--	4/29/2012 0:00	0.0076	--	4/29/2012 0:00	0.0086	--
4/29/2012 1:00	0.0083	--	4/29/2012 1:00	0.0091	--	4/29/2012 1:00	0.0092	--
4/29/2012 2:00	0.0083	--	4/29/2012 2:00	0.0094	--	4/29/2012 2:00	0.0091	--
4/29/2012 3:00	0.0084	--	4/29/2012 3:00	0.0095	--	4/29/2012 3:00	0.0092	--
4/29/2012 4:00	0.0083	--	4/29/2012 4:00	0.0095	--	4/29/2012 4:00	0.0091	--
4/29/2012 5:00	0.0085	--	4/29/2012 5:00	0.0114	--	4/29/2012 5:00	0.0088	--
4/29/2012 6:00	0.0084	--	4/29/2012 6:00	0.0093	--	4/29/2012 6:00	0.0092	--
4/29/2012 7:00	0.0083	--	4/29/2012 7:00	0.0097	--	4/29/2012 7:00	0.0088	--
4/29/2012 8:00	0.0086	--	4/29/2012 8:00	0.0096	--	4/29/2012 8:00	0.0094	--
4/29/2012 9:00	0.0087	--	4/29/2012 9:00	0.0098	--	4/29/2012 9:00	0.0095	--
4/29/2012 10:00	0.0079	--	4/29/2012 10:00	0.0089	--	4/29/2012 10:00	0.0084	--
4/29/2012 11:00	0.0082	--	4/29/2012 11:00	0.0094	--	4/29/2012 11:00	0.0090	--
4/29/2012 12:00	0.0083	--	4/29/2012 12:00	0.0096	--	4/29/2012 12:00	0.0093	--
4/29/2012 13:00	0.0083	--	4/29/2012 13:00	0.0091	--	4/29/2012 13:00	0.0091	--
4/29/2012 14:00	0.0087	--	4/29/2012 14:00	0.0103	--	4/29/2012 14:00	0.0096	--
4/29/2012 15:00	0.0081	--	4/29/2012 15:00	0.0093	--	4/29/2012 15:00	0.0091	--
4/29/2012 16:00	0.0081	--	4/29/2012 16:00	0.0092	--	4/29/2012 16:00	0.0093	--
4/29/2012 17:00	0.0082	--	4/29/2012 17:00	0.0093	--	4/29/2012 17:00	0.0094	--
4/29/2012 18:00	0.0082	--	4/29/2012 18:00	0.0092	--	4/29/2012 18:00	0.0094	--
4/29/2012 19:00	0.0083	--	4/29/2012 19:00	0.0088	--	4/29/2012 19:00	0.0094	--
4/29/2012 20:00	0.0083	--	4/29/2012 20:00	0.0093	--	4/29/2012 20:00	0.0095	--
4/29/2012 21:00	0.0083	--	4/29/2012 21:00	0.0093	--	4/29/2012 21:00	0.0095	--
4/29/2012 22:00	0.0083	--	4/29/2012 22:00	0.0094	--	4/29/2012 22:00	0.0095	--
4/29/2012 23:00	0.0083	0.0079	4/29/2012 23:00	0.0094	0.0079	4/29/2012 23:00	0.0095	0.0079
4/30/2012 0:00	0.0083	--	4/30/2012 0:00	0.0094	--	4/30/2012 0:00	0.0095	--
4/30/2012 1:00	0.0083	--	4/30/2012 1:00	0.0093	--	4/30/2012 1:00	0.0095	--
4/30/2012 2:00	0.0083	--	4/30/2012 2:00	0.0094	--	4/30/2012 2:00	0.0095	--
4/30/2012 3:00	0.0083	--	4/30/2012 3:00	0.0094	--	4/30/2012 3:00	0.0095	--
4/30/2012 4:00	0.0083	--	4/30/2012 4:00	0.0095	--	4/30/2012 4:00	0.0095	--
4/30/2012 5:00	0.0084	--	4/30/2012 5:00	0.0099	--	4/30/2012 5:00	0.0097	--
4/30/2012 6:00	0.0082	--	4/30/2012 6:00	0.0089	--	4/30/2012 6:00	0.0094	--
4/30/2012 7:00	0.0084	--	4/30/2012 7:00	0.0094	--	4/30/2012 7:00	0.0095	--
4/30/2012 8:00	0.0084	--	4/30/2012 8:00	0.0094	--	4/30/2012 8:00	0.0096	--
4/30/2012 9:00	0.0084	--	4/30/2012 9:00	0.0093	--	4/30/2012 9:00	0.0096	--
4/30/2012 10:00	0.0085	--	4/30/2012 10:00	0.0096	--	4/30/2012 10:00	0.0096	--
4/30/2012 11:00	0.0084	--	4/30/2012 11:00	0.0095	--	4/30/2012 11:00	0.0095	--
4/30/2012 12:00	0.0083	--	4/30/2012 12:00	0.0096	--	4/30/2012 12:00	0.0093	--
4/30/2012 13:00	0.0084	--	4/30/2012 13:00	0.0093	--	4/30/2012 13:00	0.0097	--

Package Boiler No. 1 EPN 81BF01			Package Boiler No. 2 EPN 50BF02			Package Boiler No. 3 EPN 50BF03		
Date	NO_X (lb/MMBtu)	NO_X (lb/MMBtu) 30-day Rolling Average	Date	NO_X (lb/MMBtu)	NO_X (lb/MMBtu) 30-day Rolling Average	Date	NO_X (lb/MMBtu)	NO_X (lb/MMBtu) 30-day Rolling Average
4/30/2012 14:00	0.0082	--	4/30/2012 14:00	0.0095	--	4/30/2012 14:00	0.0093	--
4/30/2012 15:00	0.0084	--	4/30/2012 15:00	0.0095	--	4/30/2012 15:00	0.0094	--
4/30/2012 16:00	0.0083	--	4/30/2012 16:00	0.0093	--	4/30/2012 16:00	0.0095	--
4/30/2012 17:00	0.0081	--	4/30/2012 17:00	0.0093	--	4/30/2012 17:00	0.0092	--
4/30/2012 18:00	0.0081	--	4/30/2012 18:00	0.0093	--	4/30/2012 18:00	0.0092	--
4/30/2012 19:00	0.0083	--	4/30/2012 19:00	0.0093	--	4/30/2012 19:00	0.0095	--
4/30/2012 20:00	0.0080	--	4/30/2012 20:00	0.0095	--	4/30/2012 20:00	0.0073	--
4/30/2012 21:00	0.0082	--	4/30/2012 21:00	0.0097	--	4/30/2012 21:00	0.0096	--
4/30/2012 22:00	0.0082	--	4/30/2012 22:00	0.0079	--	4/30/2012 22:00	0.0094	--
4/30/2012 23:00	0.0083	0.0079	4/30/2012 23:00	0.0092	0.0080	4/30/2012 23:00	0.0091	0.0080
5/1/2012 0:00	0.0083	--	5/1/2012 0:00	0.0094	--	5/1/2012 0:00	0.0091	--
5/1/2012 1:00	0.0082	--	5/1/2012 1:00	0.0094	--	5/1/2012 1:00	0.0090	--
5/1/2012 2:00	0.0089	--	5/1/2012 2:00	0.0091	--	5/1/2012 2:00	0.0084	--
5/1/2012 3:00	0.0089	--	5/1/2012 3:00	0.0049	--	5/1/2012 3:00	SOURCE DOWN	--
5/1/2012 4:00	0.0084	--	5/1/2012 4:00	0.0091	--	5/1/2012 4:00	SOURCE DOWN	--
5/1/2012 5:00	0.0077	--	5/1/2012 5:00	0.0109	--	5/1/2012 5:00	0.0193	--
5/1/2012 6:00	0.0078	--	5/1/2012 6:00	0.0099	--	5/1/2012 6:00	SOURCE DOWN	--
5/1/2012 7:00	0.0084	--	5/1/2012 7:00	0.0097	--	5/1/2012 7:00	SOURCE DOWN	--
5/1/2012 8:00	0.0085	--	5/1/2012 8:00	0.0094	--	5/1/2012 8:00	SOURCE DOWN	--
5/1/2012 9:00	0.0086	--	5/1/2012 9:00	0.0095	--	5/1/2012 9:00	SOURCE DOWN	--
5/1/2012 10:00	0.0085	--	5/1/2012 10:00	0.0098	--	5/1/2012 10:00	SOURCE DOWN	--
5/1/2012 11:00	0.0084	--	5/1/2012 11:00	0.0095	--	5/1/2012 11:00	SOURCE DOWN	--
5/1/2012 12:00	0.0083	--	5/1/2012 12:00	0.0097	--	5/1/2012 12:00	SOURCE DOWN	--
5/1/2012 13:00	0.0081	--	5/1/2012 13:00	0.0095	--	5/1/2012 13:00	SOURCE DOWN	--
5/1/2012 14:00	0.0081	--	5/1/2012 14:00	0.0088	--	5/1/2012 14:00	SOURCE DOWN	--
5/1/2012 15:00	0.0082	--	5/1/2012 15:00	0.0093	--	5/1/2012 15:00	SOURCE DOWN	--
5/1/2012 16:00	0.0082	--	5/1/2012 16:00	0.0093	--	5/1/2012 16:00	SOURCE DOWN	--
5/1/2012 17:00	0.0083	--	5/1/2012 17:00	0.0094	--	5/1/2012 17:00	SOURCE DOWN	--
5/1/2012 18:00	0.0082	--	5/1/2012 18:00	0.0096	--	5/1/2012 18:00	SOURCE DOWN	--
5/1/2012 19:00	0.0082	--	5/1/2012 19:00	0.0094	--	5/1/2012 19:00	SOURCE DOWN	--
5/1/2012 20:00	0.0085	--	5/1/2012 20:00	0.0093	--	5/1/2012 20:00	SOURCE DOWN	--
5/1/2012 21:00	0.0083	--	5/1/2012 21:00	0.0093	--	5/1/2012 21:00	SOURCE DOWN	--
5/1/2012 22:00	0.0082	--	5/1/2012 22:00	0.0093	--	5/1/2012 22:00	SOURCE DOWN	--
5/1/2012 23:00	0.0084	0.0079	5/1/2012 23:00	0.0094	0.0080	5/1/2012 23:00	SOURCE DOWN	0.0078
5/2/2012 0:00	0.0082	--	5/2/2012 0:00	0.0093	--	5/2/2012 0:00	SOURCE DOWN	--
5/2/2012 1:00	0.0082	--	5/2/2012 1:00	0.0091	--	5/2/2012 1:00	SOURCE DOWN	--
5/2/2012 2:00	0.0083	--	5/2/2012 2:00	0.0094	--	5/2/2012 2:00	SOURCE DOWN	--
5/2/2012 3:00	0.0083	--	5/2/2012 3:00	0.0096	--	5/2/2012 3:00	SOURCE DOWN	--
5/2/2012 4:00	0.0083	--	5/2/2012 4:00	0.0094	--	5/2/2012 4:00	SOURCE DOWN	--
5/2/2012 5:00	0.0089	--	5/2/2012 5:00	0.0091	--	5/2/2012 5:00	0.0313	--
5/2/2012 6:00	0.0084	--	5/2/2012 6:00	0.0094	--	5/2/2012 6:00	SOURCE DOWN	--

Package Boiler No. 1 EPN 81BF01			Package Boiler No. 2 EPN 50BF02			Package Boiler No. 3 EPN 50BF03		
Date	NO_X (lb/MMBtu)	NO_X (lb/MMBtu) 30-day Rolling Average	Date	NO_X (lb/MMBtu)	NO_X (lb/MMBtu) 30-day Rolling Average	Date	NO_X (lb/MMBtu)	NO_X (lb/MMBtu) 30-day Rolling Average
5/2/2012 7:00	0.0083	--	5/2/2012 7:00	0.0096	--	5/2/2012 7:00	SOURCE DOWN	--
5/2/2012 8:00	0.0086	--	5/2/2012 8:00	0.0101	--	5/2/2012 8:00	SOURCE DOWN	--
5/2/2012 9:00	0.0087	--	5/2/2012 9:00	0.0093	--	5/2/2012 9:00	SOURCE DOWN	--
5/2/2012 10:00	0.0087	--	5/2/2012 10:00	0.0098	--	5/2/2012 10:00	SOURCE DOWN	--
5/2/2012 11:00	0.0085	--	5/2/2012 11:00	0.0099	--	5/2/2012 11:00	SOURCE DOWN	--
5/2/2012 12:00	0.0085	--	5/2/2012 12:00	0.0100	--	5/2/2012 12:00	SOURCE DOWN	--
5/2/2012 13:00	0.0085	--	5/2/2012 13:00	0.0095	--	5/2/2012 13:00	SOURCE DOWN	--
5/2/2012 14:00	0.0082	--	5/2/2012 14:00	0.0090	--	5/2/2012 14:00	SOURCE DOWN	--
5/2/2012 15:00	0.0081	--	5/2/2012 15:00	0.0095	--	5/2/2012 15:00	SOURCE DOWN	--
5/2/2012 16:00	0.0099	--	5/2/2012 16:00	0.0107	--	5/2/2012 16:00	SOURCE DOWN	--
5/2/2012 17:00	0.0081	--	5/2/2012 17:00	0.0080	--	5/2/2012 17:00	SOURCE DOWN	--
5/2/2012 18:00	0.0081	--	5/2/2012 18:00	0.0092	--	5/2/2012 18:00	SOURCE DOWN	--
5/2/2012 19:00	0.0081	--	5/2/2012 19:00	0.0093	--	5/2/2012 19:00	SOURCE DOWN	--
5/2/2012 20:00	0.0081	--	5/2/2012 20:00	0.0094	--	5/2/2012 20:00	SOURCE DOWN	--
5/2/2012 21:00	0.0082	--	5/2/2012 21:00	0.0097	--	5/2/2012 21:00	SOURCE DOWN	--
5/2/2012 22:00	0.0083	--	5/2/2012 22:00	0.0093	--	5/2/2012 22:00	SOURCE DOWN	--
5/2/2012 23:00	0.0083	0.0079	5/2/2012 23:00	0.0094	0.0080	5/2/2012 23:00	SOURCE DOWN	0.0076
5/3/2012 0:00	0.0083	--	5/3/2012 0:00	0.0094	--	5/3/2012 0:00	SOURCE DOWN	--
5/3/2012 1:00	0.0083	--	5/3/2012 1:00	0.0094	--	5/3/2012 1:00	SOURCE DOWN	--
5/3/2012 2:00	0.0083	--	5/3/2012 2:00	0.0094	--	5/3/2012 2:00	SOURCE DOWN	--
5/3/2012 3:00	0.0083	--	5/3/2012 3:00	0.0096	--	5/3/2012 3:00	SOURCE DOWN	--
5/3/2012 4:00	0.0083	--	5/3/2012 4:00	0.0095	--	5/3/2012 4:00	SOURCE DOWN	--
5/3/2012 5:00	0.0085	--	5/3/2012 5:00	0.0093	--	5/3/2012 5:00	0.0239	--
5/3/2012 6:00	0.0084	--	5/3/2012 6:00	0.0097	--	5/3/2012 6:00	0.0027	--
5/3/2012 7:00	0.0086	--	5/3/2012 7:00	0.0096	--	5/3/2012 7:00	0.0036	--
5/3/2012 8:00	0.0087	--	5/3/2012 8:00	0.0097	--	5/3/2012 8:00	0.0036	--
5/3/2012 9:00	0.0105	--	5/3/2012 9:00	0.0144	--	5/3/2012 9:00	0.0043	--
5/3/2012 10:00	0.0113	--	5/3/2012 10:00	0.0105	--	5/3/2012 10:00	0.0043	--
5/3/2012 11:00	0.0112	--	5/3/2012 11:00	0.0092	--	5/3/2012 11:00	0.0036	--
5/3/2012 12:00	0.0094	--	5/3/2012 12:00	0.0105	--	5/3/2012 12:00	0.0027	--
5/3/2012 13:00	0.0087	--	5/3/2012 13:00	0.0099	--	5/3/2012 13:00	0.0024	--
5/3/2012 14:00	0.0083	--	5/3/2012 14:00	0.0096	--	5/3/2012 14:00	0.0022	--
5/3/2012 15:00	0.0074	--	5/3/2012 15:00	0.0063	--	5/3/2012 15:00	0.0022	--
5/3/2012 16:00	0.0084	--	5/3/2012 16:00	0.0078	--	5/3/2012 16:00	0.0031	--
5/3/2012 17:00	0.0082	--	5/3/2012 17:00	0.0091	--	5/3/2012 17:00	SOURCE DOWN	--
5/3/2012 18:00	0.0086	--	5/3/2012 18:00	0.0090	--	5/3/2012 18:00	0.0031	--
5/3/2012 19:00	0.0078	--	5/3/2012 19:00	0.0094	--	5/3/2012 19:00	0.0054	--
5/3/2012 20:00	0.0082	--	5/3/2012 20:00	0.0094	--	5/3/2012 20:00	0.0109	--
5/3/2012 21:00	0.0085	--	5/3/2012 21:00	0.0092	--	5/3/2012 21:00	SOURCE DOWN	--
5/3/2012 22:00	0.0087	--	5/3/2012 22:00	0.0099	--	5/3/2012 22:00	SOURCE DOWN	--
5/3/2012 23:00	0.0087	0.0079	5/3/2012 23:00	0.0088	0.0081	5/3/2012 23:00	SOURCE DOWN	0.0074

Package Boiler No. 1 EPN 81BF01			Package Boiler No. 2 EPN 50BF02			Package Boiler No. 3 EPN 50BF03		
Date	NO_X (lb/MMBtu)	NO_X (lb/MMBtu) 30-day Rolling Average	Date	NO_X (lb/MMBtu)	NO_X (lb/MMBtu) 30-day Rolling Average	Date	NO_X (lb/MMBtu)	NO_X (lb/MMBtu) 30-day Rolling Average
5/4/2012 0:00	0.0084	--	5/4/2012 0:00	0.0094	--	5/4/2012 0:00	SOURCE DOWN	--
5/4/2012 1:00	0.0082	--	5/4/2012 1:00	0.0082	--	5/4/2012 1:00	SOURCE DOWN	--
5/4/2012 2:00	0.0097	--	5/4/2012 2:00	0.0106	--	5/4/2012 2:00	SOURCE DOWN	--
5/4/2012 3:00	0.0085	--	5/4/2012 3:00	0.0091	--	5/4/2012 3:00	SOURCE DOWN	--
5/4/2012 4:00	0.0082	--	5/4/2012 4:00	0.0094	--	5/4/2012 4:00	SOURCE DOWN	--
5/4/2012 5:00	0.0086	--	5/4/2012 5:00	0.0088	--	5/4/2012 5:00	0.0282	--
5/4/2012 6:00	0.0089	--	5/4/2012 6:00	0.0111	--	5/4/2012 6:00	0.0024	--
5/4/2012 7:00	0.0088	--	5/4/2012 7:00	0.0095	--	5/4/2012 7:00	0.0024	--
5/4/2012 8:00	0.0085	--	5/4/2012 8:00	0.0085	--	5/4/2012 8:00	0.0024	--
5/4/2012 9:00	0.0087	--	5/4/2012 9:00	0.0096	--	5/4/2012 9:00	0.0027	--
5/4/2012 10:00	0.0088	--	5/4/2012 10:00	0.0098	--	5/4/2012 10:00	0.0027	--
5/4/2012 11:00	0.0086	--	5/4/2012 11:00	0.0095	--	5/4/2012 11:00	0.0024	--
5/4/2012 12:00	0.0088	--	5/4/2012 12:00	0.0090	--	5/4/2012 12:00	0.0024	--
5/4/2012 13:00	0.0089	--	5/4/2012 13:00	0.0091	--	5/4/2012 13:00	0.0022	--
5/4/2012 14:00	0.0086	--	5/4/2012 14:00	0.0095	--	5/4/2012 14:00	0.0020	--
5/4/2012 15:00	0.0087	--	5/4/2012 15:00	0.0093	--	5/4/2012 15:00	0.0017	--
5/4/2012 16:00	0.0087	--	5/4/2012 16:00	0.0094	--	5/4/2012 16:00	0.0017	--
5/4/2012 17:00	0.0084	--	5/4/2012 17:00	0.0093	--	5/4/2012 17:00	0.0016	--
5/4/2012 18:00	0.0083	--	5/4/2012 18:00	0.0092	--	5/4/2012 18:00	0.0016	--
5/4/2012 19:00	0.0085	--	5/4/2012 19:00	0.0092	--	5/4/2012 19:00	0.0017	--
5/4/2012 20:00	0.0086	--	5/4/2012 20:00	0.0096	--	5/4/2012 20:00	0.0018	--
5/4/2012 21:00	0.0085	--	5/4/2012 21:00	0.0093	--	5/4/2012 21:00	0.0024	--
5/4/2012 22:00	0.0084	--	5/4/2012 22:00	0.0097	--	5/4/2012 22:00	0.0024	--
5/4/2012 23:00	0.0086	0.0080	5/4/2012 23:00	0.0095	0.0081	5/4/2012 23:00	0.0024	0.0073
5/5/2012 0:00	0.0088	--	5/5/2012 0:00	0.0097	--	5/5/2012 0:00	0.0031	--
5/5/2012 1:00	0.0087	--	5/5/2012 1:00	0.0094	--	5/5/2012 1:00	0.0031	--
5/5/2012 2:00	0.0086	--	5/5/2012 2:00	0.0097	--	5/5/2012 2:00	0.0022	--
5/5/2012 3:00	0.0086	--	5/5/2012 3:00	0.0095	--	5/5/2012 3:00	0.0020	--
5/5/2012 4:00	0.0086	--	5/5/2012 4:00	0.0093	--	5/5/2012 4:00	0.0018	--
5/5/2012 5:00	0.0089	--	5/5/2012 5:00	0.0091	--	5/5/2012 5:00	0.0276	--
5/5/2012 6:00	0.0087	--	5/5/2012 6:00	0.0094	--	5/5/2012 6:00	0.0020	--
5/5/2012 7:00	0.0088	--	5/5/2012 7:00	0.0094	--	5/5/2012 7:00	0.0022	--
5/5/2012 8:00	0.0089	--	5/5/2012 8:00	0.0100	--	5/5/2012 8:00	0.0024	--
5/5/2012 9:00	0.0089	--	5/5/2012 9:00	0.0099	--	5/5/2012 9:00	0.0024	--
5/5/2012 10:00	0.0089	--	5/5/2012 10:00	0.0096	--	5/5/2012 10:00	0.0027	--
5/5/2012 11:00	0.0089	--	5/5/2012 11:00	0.0098	--	5/5/2012 11:00	0.0024	--
5/5/2012 12:00	0.0085	--	5/5/2012 12:00	0.0095	--	5/5/2012 12:00	0.0020	--
5/5/2012 13:00	0.0086	--	5/5/2012 13:00	0.0093	--	5/5/2012 13:00	0.0017	--
5/5/2012 14:00	0.0085	--	5/5/2012 14:00	0.0095	--	5/5/2012 14:00	0.0016	--
5/5/2012 15:00	0.0085	--	5/5/2012 15:00	0.0096	--	5/5/2012 15:00	0.0357	--
5/5/2012 16:00	0.0086	--	5/5/2012 16:00	0.0094	--	5/5/2012 16:00	0.0484	--

Package Boiler No. 1 EPN 81BF01			Package Boiler No. 2 EPN 50BF02			Package Boiler No. 3 EPN 50BF03		
Date	NO_X (lb/MMBtu)	NO_X (lb/MMBtu) 30-day Rolling Average	Date	NO_X (lb/MMBtu)	NO_X (lb/MMBtu) 30-day Rolling Average	Date	NO_X (lb/MMBtu)	NO_X (lb/MMBtu) 30-day Rolling Average
5/5/2012 17:00	0.0086	--	5/5/2012 17:00	0.0095	--	5/5/2012 17:00	0.0542	--
5/5/2012 18:00	0.0084	--	5/5/2012 18:00	0.0094	--	5/5/2012 18:00	0.0488	--
5/5/2012 19:00	0.0085	--	5/5/2012 19:00	0.0093	--	5/5/2012 19:00	0.0464	--
5/5/2012 20:00	0.0084	--	5/5/2012 20:00	0.0091	--	5/5/2012 20:00	0.0467	--
5/5/2012 21:00	0.0086	--	5/5/2012 21:00	0.0094	--	5/5/2012 21:00	0.0515	--
5/5/2012 22:00	0.0087	--	5/5/2012 22:00	0.0094	--	5/5/2012 22:00	0.0515	--
5/5/2012 23:00	0.0088	0.0080	5/5/2012 23:00	0.0095	0.0082	5/5/2012 23:00	0.0520	0.0077
5/6/2012 0:00	0.0086	--	5/6/2012 0:00	0.0095	--	5/6/2012 0:00	0.0520	--
5/6/2012 1:00	0.0086	--	5/6/2012 1:00	0.0093	--	5/6/2012 1:00	0.0515	--
5/6/2012 2:00	0.0086	--	5/6/2012 2:00	0.0095	--	5/6/2012 2:00	0.0524	--
5/6/2012 3:00	0.0086	--	5/6/2012 3:00	0.0096	--	5/6/2012 3:00	0.0537	--
5/6/2012 4:00	0.0087	--	5/6/2012 4:00	0.0095	--	5/6/2012 4:00	0.0588	--
5/6/2012 5:00	0.0088	--	5/6/2012 5:00	0.0099	--	5/6/2012 5:00	0.0586	--
5/6/2012 6:00	0.0085	--	5/6/2012 6:00	0.0098	--	5/6/2012 6:00	0.0564	--
5/6/2012 7:00	0.0088	--	5/6/2012 7:00	0.0098	--	5/6/2012 7:00	0.0590	--
5/6/2012 8:00	0.0092	--	5/6/2012 8:00	0.0103	--	5/6/2012 8:00	0.0615	--
5/6/2012 9:00	0.0089	--	5/6/2012 9:00	0.0100	--	5/6/2012 9:00	0.0633	--
5/6/2012 10:00	0.0087	--	5/6/2012 10:00	0.0101	--	5/6/2012 10:00	0.0657	--
5/6/2012 11:00	0.0085	--	5/6/2012 11:00	0.0099	--	5/6/2012 11:00	0.0684	--
5/6/2012 12:00	0.0086	--	5/6/2012 12:00	0.0103	--	5/6/2012 12:00	0.0692	--
5/6/2012 13:00	0.0087	--	5/6/2012 13:00	0.0106	--	5/6/2012 13:00	0.0728	--
5/6/2012 14:00	0.0086	--	5/6/2012 14:00	0.0099	--	5/6/2012 14:00	0.0793	--
5/6/2012 15:00	0.0089	--	5/6/2012 15:00	0.3212	--	5/6/2012 15:00	0.0774	--
5/6/2012 16:00	0.0086	--	5/6/2012 16:00	0.0136	--	5/6/2012 16:00	0.0766	--
5/6/2012 17:00	0.0084	--	5/6/2012 17:00	0.0727	--	5/6/2012 17:00	0.0740	--
5/6/2012 18:00	0.0085	--	5/6/2012 18:00	0.0129	--	5/6/2012 18:00	0.0742	--
5/6/2012 19:00	0.0084	--	5/6/2012 19:00	0.1966	--	5/6/2012 19:00	0.0742	--
5/6/2012 20:00	0.0086	--	5/6/2012 20:00	0.0428	--	5/6/2012 20:00	0.0741	--
5/6/2012 21:00	0.0085	--	5/6/2012 21:00	0.0108	--	5/6/2012 21:00	0.0732	--
5/6/2012 22:00	0.0086	--	5/6/2012 22:00	0.0104	--	5/6/2012 22:00	0.0727	--
5/6/2012 23:00	0.0085	0.0080	5/6/2012 23:00	0.0104	0.0091	5/6/2012 23:00	0.0726	0.0097
5/7/2012 0:00	0.0088	--	5/7/2012 0:00	0.0106	--	5/7/2012 0:00	0.0739	--
5/7/2012 1:00	0.0086	--	5/7/2012 1:00	0.0102	--	5/7/2012 1:00	0.0733	--
5/7/2012 2:00	0.0083	--	5/7/2012 2:00	0.0102	--	5/7/2012 2:00	0.0717	--
5/7/2012 3:00	0.0086	--	5/7/2012 3:00	0.0105	--	5/7/2012 3:00	0.0717	--
5/7/2012 4:00	0.0096	--	5/7/2012 4:00	0.0112	--	5/7/2012 4:00	0.0783	--
5/7/2012 5:00	0.0086	--	5/7/2012 5:00	0.0106	--	5/7/2012 5:00	0.0765	--
5/7/2012 6:00	0.0084	--	5/7/2012 6:00	0.0623	--	5/7/2012 6:00	SOURCE DOWN	--
5/7/2012 7:00	0.0089	--	5/7/2012 7:00	0.0174	--	5/7/2012 7:00	DOWNTIME	--
5/7/2012 8:00	0.0093	--	5/7/2012 8:00	0.0104	--	5/7/2012 8:00	DOWNTIME	--
5/7/2012 9:00	0.0090	--	5/7/2012 9:00	0.0106	--	5/7/2012 9:00	SOURCE DOWN	--

Package Boiler No. 1 EPN 81BF01			Package Boiler No. 2 EPN 50BF02			Package Boiler No. 3 EPN 50BF03		
Date	NO_X (lb/MMBtu)	NO_X (lb/MMBtu) 30-day Rolling Average	Date	NO_X (lb/MMBtu)	NO_X (lb/MMBtu) 30-day Rolling Average	Date	NO_X (lb/MMBtu)	NO_X (lb/MMBtu) 30-day Rolling Average
5/7/2012 10:00	0.0089	--	5/7/2012 10:00	0.0107	--	5/7/2012 10:00	0.0370	--
5/7/2012 11:00	0.0088	--	5/7/2012 11:00	0.0103	--	5/7/2012 11:00	0.0879	--
5/7/2012 12:00	0.0091	--	5/7/2012 12:00	0.0457	--	5/7/2012 12:00	0.0752	--
5/7/2012 13:00	0.0090	--	5/7/2012 13:00	0.0101	--	5/7/2012 13:00	0.0858	--
5/7/2012 14:00	0.0088	--	5/7/2012 14:00	0.0101	--	5/7/2012 14:00	0.0880	--
5/7/2012 15:00	0.0075	--	5/7/2012 15:00	0.0094	--	5/7/2012 15:00	0.0655	--
5/7/2012 16:00	0.0045	--	5/7/2012 16:00	0.0062	--	5/7/2012 16:00	0.0089	--
5/7/2012 17:00	0.0082	--	5/7/2012 17:00	0.0091	--	5/7/2012 17:00	0.0084	--
5/7/2012 18:00	0.0084	--	5/7/2012 18:00	0.0096	--	5/7/2012 18:00	0.0090	--
5/7/2012 19:00	0.0085	--	5/7/2012 19:00	0.0103	--	5/7/2012 19:00	0.0089	--
5/7/2012 20:00	0.0085	--	5/7/2012 20:00	0.0101	--	5/7/2012 20:00	0.0090	--
5/7/2012 21:00	0.0086	--	5/7/2012 21:00	0.0101	--	5/7/2012 21:00	0.0090	--
5/7/2012 22:00	0.0086	--	5/7/2012 22:00	0.0102	--	5/7/2012 22:00	0.0091	--
5/7/2012 23:00	0.0086	0.0080	5/7/2012 23:00	0.0103	0.0093	5/7/2012 23:00	0.0092	0.0108
5/8/2012 0:00	0.0086	--	5/8/2012 0:00	0.0108	--	5/8/2012 0:00	0.0092	--
5/8/2012 1:00	0.0088	--	5/8/2012 1:00	0.0101	--	5/8/2012 1:00	0.0092	--
5/8/2012 2:00	0.0086	--	5/8/2012 2:00	0.0102	--	5/8/2012 2:00	0.0091	--
5/8/2012 3:00	0.0086	--	5/8/2012 3:00	0.0101	--	5/8/2012 3:00	0.0091	--
5/8/2012 4:00	0.0085	--	5/8/2012 4:00	0.0104	--	5/8/2012 4:00	0.0090	--
5/8/2012 5:00	0.0082	--	5/8/2012 5:00	0.1239	--	5/8/2012 5:00	0.0077	--
5/8/2012 6:00	0.0086	--	5/8/2012 6:00	DOWNTIME	--	5/8/2012 6:00	0.0439	--
5/8/2012 7:00	0.0086	--	5/8/2012 7:00	DOWNTIME	--	5/8/2012 7:00	DOWNTIME	--
5/8/2012 8:00	0.0085	--	5/8/2012 8:00	0.0104	--	5/8/2012 8:00	DOWNTIME	--
5/8/2012 9:00	0.0086	--	5/8/2012 9:00	0.0104	--	5/8/2012 9:00	DOWNTIME	--
5/8/2012 10:00	0.0085	--	5/8/2012 10:00	0.0105	--	5/8/2012 10:00	0.0091	--
5/8/2012 11:00	0.0086	--	5/8/2012 11:00	0.0103	--	5/8/2012 11:00	0.0092	--
5/8/2012 12:00	0.0086	--	5/8/2012 12:00	0.0106	--	5/8/2012 12:00	0.0093	--
5/8/2012 13:00	0.0085	--	5/8/2012 13:00	0.0103	--	5/8/2012 13:00	0.0091	--
5/8/2012 14:00	0.0085	--	5/8/2012 14:00	0.0102	--	5/8/2012 14:00	0.0095	--
5/8/2012 15:00	0.0084	--	5/8/2012 15:00	0.0099	--	5/8/2012 15:00	0.0091	--
5/8/2012 16:00	0.0085	--	5/8/2012 16:00	0.0095	--	5/8/2012 16:00	0.0092	--
5/8/2012 17:00	0.0084	--	5/8/2012 17:00	0.0091	--	5/8/2012 17:00	0.0093	--
5/8/2012 18:00	0.0086	--	5/8/2012 18:00	0.0106	--	5/8/2012 18:00	0.0094	--
5/8/2012 19:00	0.0085	--	5/8/2012 19:00	0.0104	--	5/8/2012 19:00	0.0093	--
5/8/2012 20:00	0.0085	--	5/8/2012 20:00	0.0101	--	5/8/2012 20:00	0.0093	--
5/8/2012 21:00	0.0085	--	5/8/2012 21:00	0.0104	--	5/8/2012 21:00	0.0092	--
5/8/2012 22:00	0.0086	--	5/8/2012 22:00	0.0101	--	5/8/2012 22:00	0.0093	--
5/8/2012 23:00	0.0085	0.0080	5/8/2012 23:00	0.0101	0.0095	5/8/2012 23:00	0.0093	0.0109
5/9/2012 0:00	0.0085	--	5/9/2012 0:00	0.0104	--	5/9/2012 0:00	0.0093	--
5/9/2012 1:00	0.0086	--	5/9/2012 1:00	0.0101	--	5/9/2012 1:00	0.0094	--
5/9/2012 2:00	0.0086	--	5/9/2012 2:00	0.0098	--	5/9/2012 2:00	0.0094	--

Package Boiler No. 1 EPN 81BF01			Package Boiler No. 2 EPN 50BF02			Package Boiler No. 3 EPN 50BF03		
Date	NO_X (lb/MMBtu)	NO_X (lb/MMBtu) 30-day Rolling Average	Date	NO_X (lb/MMBtu)	NO_X (lb/MMBtu) 30-day Rolling Average	Date	NO_X (lb/MMBtu)	NO_X (lb/MMBtu) 30-day Rolling Average
5/9/2012 3:00	0.0086	--	5/9/2012 3:00	0.0099	--	5/9/2012 3:00	0.0092	--
5/9/2012 4:00	0.0086	--	5/9/2012 4:00	0.0108	--	5/9/2012 4:00	0.0084	--
5/9/2012 5:00	0.0087	--	5/9/2012 5:00	0.0103	--	5/9/2012 5:00	0.0098	--
5/9/2012 6:00	0.0086	--	5/9/2012 6:00	0.0093	--	5/9/2012 6:00	0.0088	--
5/9/2012 7:00	0.0086	--	5/9/2012 7:00	0.0097	--	5/9/2012 7:00	0.0089	--
5/9/2012 8:00	0.0086	--	5/9/2012 8:00	0.0099	--	5/9/2012 8:00	0.0091	--
5/9/2012 9:00	0.0086	--	5/9/2012 9:00	0.0098	--	5/9/2012 9:00	0.0093	--
5/9/2012 10:00	0.0085	--	5/9/2012 10:00	0.0098	--	5/9/2012 10:00	0.0090	--
5/9/2012 11:00	0.0086	--	5/9/2012 11:00	0.0099	--	5/9/2012 11:00	0.0095	--
5/9/2012 12:00	0.0086	--	5/9/2012 12:00	0.0091	--	5/9/2012 12:00	0.0089	--
5/9/2012 13:00	0.0084	--	5/9/2012 13:00	0.0092	--	5/9/2012 13:00	0.0081	--
5/9/2012 14:00	0.0085	--	5/9/2012 14:00	0.0101	--	5/9/2012 14:00	0.0025	--
5/9/2012 15:00	0.0086	--	5/9/2012 15:00	0.0095	--	5/9/2012 15:00	0.0027	--
5/9/2012 16:00	0.0083	--	5/9/2012 16:00	0.0091	--	5/9/2012 16:00	0.0032	--
5/9/2012 17:00	0.0084	--	5/9/2012 17:00	0.0099	--	5/9/2012 17:00	0.0041	--
5/9/2012 18:00	0.0085	--	5/9/2012 18:00	0.0094	--	5/9/2012 18:00	0.0062	--
5/9/2012 19:00	0.0085	--	5/9/2012 19:00	0.0094	--	5/9/2012 19:00	0.0083	--
5/9/2012 20:00	0.0085	--	5/9/2012 20:00	0.0096	--	5/9/2012 20:00	0.0092	--
5/9/2012 21:00	0.0085	--	5/9/2012 21:00	0.0094	--	5/9/2012 21:00	0.0092	--
5/9/2012 22:00	0.0086	--	5/9/2012 22:00	0.0096	--	5/9/2012 22:00	0.0094	--
5/9/2012 23:00	0.0086	0.0080	5/9/2012 23:00	0.0098	0.0096	5/9/2012 23:00	0.0100	0.0109
5/10/2012 0:00	0.0084	--	5/10/2012 0:00	0.0095	--	5/10/2012 0:00	0.0089	--
5/10/2012 1:00	0.0085	--	5/10/2012 1:00	0.0096	--	5/10/2012 1:00	0.0090	--
5/10/2012 2:00	0.0086	--	5/10/2012 2:00	0.0095	--	5/10/2012 2:00	0.0094	--
5/10/2012 3:00	0.0085	--	5/10/2012 3:00	0.0094	--	5/10/2012 3:00	0.0093	--
5/10/2012 4:00	0.0084	--	5/10/2012 4:00	0.0095	--	5/10/2012 4:00	0.0089	--
5/10/2012 5:00	0.0089	--	5/10/2012 5:00	0.0096	--	5/10/2012 5:00	0.0079	--
5/10/2012 6:00	0.0085	--	5/10/2012 6:00	0.0096	--	5/10/2012 6:00	0.0086	--
5/10/2012 7:00	0.0085	--	5/10/2012 7:00	0.0098	--	5/10/2012 7:00	0.0090	--
5/10/2012 8:00	0.0086	--	5/10/2012 8:00	0.0099	--	5/10/2012 8:00	0.0090	--
5/10/2012 9:00	0.0085	--	5/10/2012 9:00	0.0097	--	5/10/2012 9:00	0.0092	--
5/10/2012 10:00	0.0086	--	5/10/2012 10:00	0.0096	--	5/10/2012 10:00	0.0092	--
5/10/2012 11:00	0.0085	--	5/10/2012 11:00	0.0096	--	5/10/2012 11:00	0.0090	--
5/10/2012 12:00	0.0085	--	5/10/2012 12:00	0.0096	--	5/10/2012 12:00	0.0088	--
5/10/2012 13:00	0.0085	--	5/10/2012 13:00	0.0095	--	5/10/2012 13:00	0.0089	--
5/10/2012 14:00	0.0085	--	5/10/2012 14:00	0.0096	--	5/10/2012 14:00	0.0091	--
5/10/2012 15:00	0.0085	--	5/10/2012 15:00	0.0095	--	5/10/2012 15:00	0.0091	--
5/10/2012 16:00	0.0085	--	5/10/2012 16:00	0.0093	--	5/10/2012 16:00	0.0088	--
5/10/2012 17:00	0.0085	--	5/10/2012 17:00	0.0095	--	5/10/2012 17:00	0.0091	--
5/10/2012 18:00	0.0085	--	5/10/2012 18:00	0.0095	--	5/10/2012 18:00	0.0089	--
5/10/2012 19:00	0.0085	--	5/10/2012 19:00	0.0095	--	5/10/2012 19:00	0.0089	--

Package Boiler No. 1 EPN 81BF01			Package Boiler No. 2 EPN 50BF02			Package Boiler No. 3 EPN 50BF03		
Date	NO_X (lb/MMBtu)	NO_X (lb/MMBtu) 30-day Rolling Average	Date	NO_X (lb/MMBtu)	NO_X (lb/MMBtu) 30-day Rolling Average	Date	NO_X (lb/MMBtu)	NO_X (lb/MMBtu) 30-day Rolling Average
5/10/2012 20:00	0.0085	--	5/10/2012 20:00	0.0094	--	5/10/2012 20:00	0.0089	--
5/10/2012 21:00	0.0086	--	5/10/2012 21:00	0.0097	--	5/10/2012 21:00	0.0092	--
5/10/2012 22:00	0.0084	--	5/10/2012 22:00	0.0092	--	5/10/2012 22:00	0.0089	--
5/10/2012 23:00	0.0085	0.0080	5/10/2012 23:00	0.0094	0.0096	5/10/2012 23:00	0.0090	0.0110
5/11/2012 0:00	0.0085	--	5/11/2012 0:00	0.0091	--	5/11/2012 0:00	0.0091	--
5/11/2012 1:00	0.0085	--	5/11/2012 1:00	0.0094	--	5/11/2012 1:00	0.0089	--
5/11/2012 2:00	0.0088	--	5/11/2012 2:00	0.0082	--	5/11/2012 2:00	0.0070	--
5/11/2012 3:00	0.0086	--	5/11/2012 3:00	0.0091	--	5/11/2012 3:00	0.0062	--
5/11/2012 4:00	0.0086	--	5/11/2012 4:00	0.0092	--	5/11/2012 4:00	0.0091	--
5/11/2012 5:00	0.0091	--	5/11/2012 5:00	0.0090	--	5/11/2012 5:00	0.0094	--
5/11/2012 6:00	0.0086	--	5/11/2012 6:00	0.0097	--	5/11/2012 6:00	0.0089	--
5/11/2012 7:00	0.0086	--	5/11/2012 7:00	0.0101	--	5/11/2012 7:00	0.0091	--
5/11/2012 8:00	0.0085	--	5/11/2012 8:00	0.0098	--	5/11/2012 8:00	0.0088	--
5/11/2012 9:00	0.0086	--	5/11/2012 9:00	0.0099	--	5/11/2012 9:00	0.0096	--
5/11/2012 10:00	0.0085	--	5/11/2012 10:00	0.0098	--	5/11/2012 10:00	0.0083	--
5/11/2012 11:00	0.0086	--	5/11/2012 11:00	0.0096	--	5/11/2012 11:00	0.0088	--
5/11/2012 12:00	0.0089	--	5/11/2012 12:00	0.0102	--	5/11/2012 12:00	0.0115	--
5/11/2012 13:00	0.0082	--	5/11/2012 13:00	0.0094	--	5/11/2012 13:00	0.0067	--
5/11/2012 14:00	0.0085	--	5/11/2012 14:00	0.0100	--	5/11/2012 14:00	0.0085	--
5/11/2012 15:00	0.0085	--	5/11/2012 15:00	0.0095	--	5/11/2012 15:00	0.0092	--
5/11/2012 16:00	0.0085	--	5/11/2012 16:00	0.0093	--	5/11/2012 16:00	0.0093	--
5/11/2012 17:00	0.0084	--	5/11/2012 17:00	0.0095	--	5/11/2012 17:00	0.0085	--
5/11/2012 18:00	0.0085	--	5/11/2012 18:00	0.0095	--	5/11/2012 18:00	0.0087	--
5/11/2012 19:00	0.0085	--	5/11/2012 19:00	0.0096	--	5/11/2012 19:00	0.0091	--
5/11/2012 20:00	0.0088	--	5/11/2012 20:00	0.0131	--	5/11/2012 20:00	0.0116	--
5/11/2012 21:00	0.0092	--	5/11/2012 21:00	0.0055	--	5/11/2012 21:00	0.0231	--
5/11/2012 22:00	0.0080	--	5/11/2012 22:00	0.0065	--	5/11/2012 22:00	0.0069	--
5/11/2012 23:00	0.0083	0.0081	5/11/2012 23:00	0.0099	0.0097	5/11/2012 23:00	0.0053	0.0110
5/12/2012 0:00	0.0087	--	5/12/2012 0:00	0.0089	--	5/12/2012 0:00	0.0098	--
5/12/2012 1:00	0.0087	--	5/12/2012 1:00	0.0087	--	5/12/2012 1:00	0.0113	--
5/12/2012 2:00	0.0086	--	5/12/2012 2:00	0.0087	--	5/12/2012 2:00	0.0100	--
5/12/2012 3:00	0.0087	--	5/12/2012 3:00	0.0093	--	5/12/2012 3:00	0.0092	--
5/12/2012 4:00	0.0086	--	5/12/2012 4:00	0.0097	--	5/12/2012 4:00	0.0092	--
5/12/2012 5:00	0.0086	--	5/12/2012 5:00	0.0102	--	5/12/2012 5:00	0.0088	--
5/12/2012 6:00	0.0088	--	5/12/2012 6:00	0.0093	--	5/12/2012 6:00	0.0096	--
5/12/2012 7:00	0.0086	--	5/12/2012 7:00	0.0095	--	5/12/2012 7:00	0.0097	--
5/12/2012 8:00	0.0086	--	5/12/2012 8:00	0.0093	--	5/12/2012 8:00	0.0093	--
5/12/2012 9:00	0.0087	--	5/12/2012 9:00	0.0095	--	5/12/2012 9:00	0.0092	--
5/12/2012 10:00	0.0087	--	5/12/2012 10:00	0.0097	--	5/12/2012 10:00	0.0095	--
5/12/2012 11:00	0.0088	--	5/12/2012 11:00	0.0094	--	5/12/2012 11:00	0.0097	--
5/12/2012 12:00	0.0086	--	5/12/2012 12:00	0.0096	--	5/12/2012 12:00	0.0091	--

Package Boiler No. 1 EPN 81BF01			Package Boiler No. 2 EPN 50BF02			Package Boiler No. 3 EPN 50BF03		
Date	NO_X (lb/MMBtu)	NO_X (lb/MMBtu) 30-day Rolling Average	Date	NO_X (lb/MMBtu)	NO_X (lb/MMBtu) 30-day Rolling Average	Date	NO_X (lb/MMBtu)	NO_X (lb/MMBtu) 30-day Rolling Average
5/12/2012 13:00	0.0087	--	5/12/2012 13:00	0.0093	--	5/12/2012 13:00	0.0096	--
5/12/2012 14:00	0.0087	--	5/12/2012 14:00	0.0097	--	5/12/2012 14:00	0.0094	--
5/12/2012 15:00	0.0087	--	5/12/2012 15:00	0.0093	--	5/12/2012 15:00	0.0098	--
5/12/2012 16:00	0.0086	--	5/12/2012 16:00	0.0090	--	5/12/2012 16:00	0.0098	--
5/12/2012 17:00	0.0086	--	5/12/2012 17:00	0.0092	--	5/12/2012 17:00	0.0087	--
5/12/2012 18:00	0.0086	--	5/12/2012 18:00	0.0091	--	5/12/2012 18:00	0.0093	--
5/12/2012 19:00	0.0086	--	5/12/2012 19:00	0.0096	--	5/12/2012 19:00	0.0099	--
5/12/2012 20:00	0.0086	--	5/12/2012 20:00	0.0089	--	5/12/2012 20:00	0.0097	--
5/12/2012 21:00	0.0086	--	5/12/2012 21:00	0.0096	--	5/12/2012 21:00	0.0095	--
5/12/2012 22:00	0.0085	--	5/12/2012 22:00	0.0095	--	5/12/2012 22:00	0.0091	--
5/12/2012 23:00	0.0086	0.0081	5/12/2012 23:00	0.0093	0.0097	5/12/2012 23:00	0.0092	0.0111
5/13/2012 0:00	0.0086	--	5/13/2012 0:00	0.0093	--	5/13/2012 0:00	0.0092	--
5/13/2012 1:00	0.0086	--	5/13/2012 1:00	0.0094	--	5/13/2012 1:00	0.0092	--
5/13/2012 2:00	0.0086	--	5/13/2012 2:00	0.0094	--	5/13/2012 2:00	0.0093	--
5/13/2012 3:00	0.0087	--	5/13/2012 3:00	0.0092	--	5/13/2012 3:00	0.0095	--
5/13/2012 4:00	0.0085	--	5/13/2012 4:00	0.0093	--	5/13/2012 4:00	0.0093	--
5/13/2012 5:00	0.0088	--	5/13/2012 5:00	0.0103	--	5/13/2012 5:00	0.0103	--
5/13/2012 6:00	0.0087	--	5/13/2012 6:00	0.0093	--	5/13/2012 6:00	0.0104	--
5/13/2012 7:00	0.0086	--	5/13/2012 7:00	0.0092	--	5/13/2012 7:00	0.0098	--
5/13/2012 8:00	0.0087	--	5/13/2012 8:00	0.0097	--	5/13/2012 8:00	0.0093	--
5/13/2012 9:00	0.0086	--	5/13/2012 9:00	0.0095	--	5/13/2012 9:00	0.0095	--
5/13/2012 10:00	0.0087	--	5/13/2012 10:00	0.0094	--	5/13/2012 10:00	0.0091	--
5/13/2012 11:00	0.0092	--	5/13/2012 11:00	0.0099	--	5/13/2012 11:00	0.0106	--
5/13/2012 12:00	0.0083	--	5/13/2012 12:00	0.0094	--	5/13/2012 12:00	0.0092	--
5/13/2012 13:00	0.0085	--	5/13/2012 13:00	0.0093	--	5/13/2012 13:00	0.0089	--
5/13/2012 14:00	0.0085	--	5/13/2012 14:00	0.0096	--	5/13/2012 14:00	0.0088	--
5/13/2012 15:00	0.0086	--	5/13/2012 15:00	0.0095	--	5/13/2012 15:00	0.0086	--
5/13/2012 16:00	0.0086	--	5/13/2012 16:00	0.0092	--	5/13/2012 16:00	0.0090	--
5/13/2012 17:00	0.0086	--	5/13/2012 17:00	0.0092	--	5/13/2012 17:00	0.0099	--
5/13/2012 18:00	0.0085	--	5/13/2012 18:00	0.0094	--	5/13/2012 18:00	0.0096	--
5/13/2012 19:00	0.0086	--	5/13/2012 19:00	0.0094	--	5/13/2012 19:00	0.0093	--
5/13/2012 20:00	0.0085	--	5/13/2012 20:00	0.0094	--	5/13/2012 20:00	0.0090	--
5/13/2012 21:00	0.0085	--	5/13/2012 21:00	0.0094	--	5/13/2012 21:00	0.0089	--
5/13/2012 22:00	0.0085	--	5/13/2012 22:00	0.0091	--	5/13/2012 22:00	0.0088	--
5/13/2012 23:00	0.0085	0.0081	5/13/2012 23:00	0.0095	0.0098	5/13/2012 23:00	0.0089	0.0111
5/14/2012 0:00	0.0086	--	5/14/2012 0:00	0.0089	--	5/14/2012 0:00	0.0090	--
5/14/2012 1:00	0.0086	--	5/14/2012 1:00	0.0094	--	5/14/2012 1:00	0.0091	--
5/14/2012 2:00	0.0085	--	5/14/2012 2:00	0.0093	--	5/14/2012 2:00	0.0089	--
5/14/2012 3:00	0.0085	--	5/14/2012 3:00	0.0093	--	5/14/2012 3:00	0.0092	--
5/14/2012 4:00	0.0084	--	5/14/2012 4:00	0.0098	--	5/14/2012 4:00	0.0089	--
5/14/2012 5:00	0.0092	--	5/14/2012 5:00	0.0103	--	5/14/2012 5:00	0.0109	--

Package Boiler No. 1 EPN 81BF01			Package Boiler No. 2 EPN 50BF02			Package Boiler No. 3 EPN 50BF03		
Date	NO_X (lb/MMBtu)	NO_X (lb/MMBtu) 30-day Rolling Average	Date	NO_X (lb/MMBtu)	NO_X (lb/MMBtu) 30-day Rolling Average	Date	NO_X (lb/MMBtu)	NO_X (lb/MMBtu) 30-day Rolling Average
5/14/2012 6:00	0.0099	--	5/14/2012 6:00	0.0071	--	5/14/2012 6:00	0.0123	--
5/14/2012 7:00	SOURCE DOWN	--	5/14/2012 7:00	0.0078	--	5/14/2012 7:00	0.0080	--
5/14/2012 8:00	SOURCE DOWN	--	5/14/2012 8:00	0.0097	--	5/14/2012 8:00	0.0081	--
5/14/2012 9:00	SOURCE DOWN	--	5/14/2012 9:00	0.0097	--	5/14/2012 9:00	0.0090	--
5/14/2012 10:00	SOURCE DOWN	--	5/14/2012 10:00	0.0096	--	5/14/2012 10:00	0.0076	--
5/14/2012 11:00	SOURCE DOWN	--	5/14/2012 11:00	0.0093	--	5/14/2012 11:00	0.0068	--
5/14/2012 12:00	SOURCE DOWN	--	5/14/2012 12:00	0.0097	--	5/14/2012 12:00	0.0073	--
5/14/2012 13:00	SOURCE DOWN	--	5/14/2012 13:00	0.0095	--	5/14/2012 13:00	0.0074	--
5/14/2012 14:00	SOURCE DOWN	--	5/14/2012 14:00	0.0097	--	5/14/2012 14:00	0.0077	--
5/14/2012 15:00	SOURCE DOWN	--	5/14/2012 15:00	0.0090	--	5/14/2012 15:00	0.0078	--
5/14/2012 16:00	SOURCE DOWN	--	5/14/2012 16:00	0.0092	--	5/14/2012 16:00	0.0081	--
5/14/2012 17:00	SOURCE DOWN	--	5/14/2012 17:00	0.0091	--	5/14/2012 17:00	0.0092	--
5/14/2012 18:00	SOURCE DOWN	--	5/14/2012 18:00	0.0086	--	5/14/2012 18:00	0.0063	--
5/14/2012 19:00	SOURCE DOWN	--	5/14/2012 19:00	0.0086	--	5/14/2012 19:00	0.0067	--
5/14/2012 20:00	SOURCE DOWN	--	5/14/2012 20:00	0.0092	--	5/14/2012 20:00	0.0076	--
5/14/2012 21:00	SOURCE DOWN	--	5/14/2012 21:00	0.0099	--	5/14/2012 21:00	0.0077	--
5/14/2012 22:00	SOURCE DOWN	--	5/14/2012 22:00	0.0094	--	5/14/2012 22:00	0.0077	--
5/14/2012 23:00	SOURCE DOWN	0.0079	5/14/2012 23:00	0.0091	0.0098	5/14/2012 23:00	0.0086	0.0112
5/15/2012 0:00	SOURCE DOWN	--	5/15/2012 0:00	0.0093	--	5/15/2012 0:00	0.0087	--
5/15/2012 1:00	SOURCE DOWN	--	5/15/2012 1:00	0.0096	--	5/15/2012 1:00	0.0087	--
5/15/2012 2:00	SOURCE DOWN	--	5/15/2012 2:00	0.0093	--	5/15/2012 2:00	0.0088	--
5/15/2012 3:00	SOURCE DOWN	--	5/15/2012 3:00	0.0095	--	5/15/2012 3:00	0.0087	--
5/15/2012 4:00	SOURCE DOWN	--	5/15/2012 4:00	0.0076	--	5/15/2012 4:00	0.0086	--
5/15/2012 5:00	SOURCE DOWN	--	5/15/2012 5:00	0.0058	--	5/15/2012 5:00	0.0083	--
5/15/2012 6:00	SOURCE DOWN	--	5/15/2012 6:00	0.0079	--	5/15/2012 6:00	0.0082	--
5/15/2012 7:00	SOURCE DOWN	--	5/15/2012 7:00	0.0088	--	5/15/2012 7:00	0.0081	--
5/15/2012 8:00	SOURCE DOWN	--	5/15/2012 8:00	0.0088	--	5/15/2012 8:00	0.0084	--
5/15/2012 9:00	SOURCE DOWN	--	5/15/2012 9:00	0.0094	--	5/15/2012 9:00	0.0087	--
5/15/2012 10:00	SOURCE DOWN	--	5/15/2012 10:00	0.0093	--	5/15/2012 10:00	0.0087	--
5/15/2012 11:00	SOURCE DOWN	--	5/15/2012 11:00	0.0093	--	5/15/2012 11:00	0.0087	--
5/15/2012 12:00	SOURCE DOWN	--	5/15/2012 12:00	0.0093	--	5/15/2012 12:00	0.0091	--
5/15/2012 13:00	SOURCE DOWN	--	5/15/2012 13:00	0.0095	--	5/15/2012 13:00	0.0087	--
5/15/2012 14:00	SOURCE DOWN	--	5/15/2012 14:00	0.0092	--	5/15/2012 14:00	0.0090	--
5/15/2012 15:00	SOURCE DOWN	--	5/15/2012 15:00	0.0139	--	5/15/2012 15:00	0.0088	--
5/15/2012 16:00	SOURCE DOWN	--	5/15/2012 16:00	0.0756	--	5/15/2012 16:00	0.0093	--
5/15/2012 17:00	SOURCE DOWN	--	5/15/2012 17:00	0.0928	--	5/15/2012 17:00	0.0104	--
5/15/2012 18:00	SOURCE DOWN	--	5/15/2012 18:00	SOURCE DOWN	--	5/15/2012 18:00	0.0162	--
5/15/2012 19:00	SOURCE DOWN	--	5/15/2012 19:00	SOURCE DOWN	--	5/15/2012 19:00	0.0122	--
5/15/2012 20:00	SOURCE DOWN	--	5/15/2012 20:00	SOURCE DOWN	--	5/15/2012 20:00	0.0074	--
5/15/2012 21:00	SOURCE DOWN	--	5/15/2012 21:00	SOURCE DOWN	--	5/15/2012 21:00	0.0080	--
5/15/2012 22:00	SOURCE DOWN	--	5/15/2012 22:00	SOURCE DOWN	--	5/15/2012 22:00	0.0086	--

Package Boiler No. 1 EPN 81BF01			Package Boiler No. 2 EPN 50BF02			Package Boiler No. 3 EPN 50BF03		
Date	NO_X (lb/MMBtu)	NO_X (lb/MMBtu) 30-day Rolling Average	Date	NO_X (lb/MMBtu)	NO_X (lb/MMBtu) 30-day Rolling Average	Date	NO_X (lb/MMBtu)	NO_X (lb/MMBtu) 30-day Rolling Average
5/15/2012 23:00	SOURCE DOWN	0.0076	5/15/2012 23:00	SOURCE DOWN	0.0100	5/15/2012 23:00	0.0109	0.0112
5/16/2012 0:00	SOURCE DOWN	--	5/16/2012 0:00	SOURCE DOWN	--	5/16/2012 0:00	0.0110	--
5/16/2012 1:00	SOURCE DOWN	--	5/16/2012 1:00	SOURCE DOWN	--	5/16/2012 1:00	0.0116	--
5/16/2012 2:00	SOURCE DOWN	--	5/16/2012 2:00	SOURCE DOWN	--	5/16/2012 2:00	0.0112	--
5/16/2012 3:00	SOURCE DOWN	--	5/16/2012 3:00	SOURCE DOWN	--	5/16/2012 3:00	0.0116	--
5/16/2012 4:00	SOURCE DOWN	--	5/16/2012 4:00	SOURCE DOWN	--	5/16/2012 4:00	0.0088	--
5/16/2012 5:00	SOURCE DOWN	--	5/16/2012 5:00	SOURCE DOWN	--	5/16/2012 5:00	0.0100	--
5/16/2012 6:00	SOURCE DOWN	--	5/16/2012 6:00	SOURCE DOWN	--	5/16/2012 6:00	0.0096	--
5/16/2012 7:00	SOURCE DOWN	--	5/16/2012 7:00	SOURCE DOWN	--	5/16/2012 7:00	0.0095	--
5/16/2012 8:00	SOURCE DOWN	--	5/16/2012 8:00	SOURCE DOWN	--	5/16/2012 8:00	0.0071	--
5/16/2012 9:00	SOURCE DOWN	--	5/16/2012 9:00	SOURCE DOWN	--	5/16/2012 9:00	0.0061	--
5/16/2012 10:00	SOURCE DOWN	--	5/16/2012 10:00	SOURCE DOWN	--	5/16/2012 10:00	0.0063	--
5/16/2012 11:00	SOURCE DOWN	--	5/16/2012 11:00	SOURCE DOWN	--	5/16/2012 11:00	0.0062	--
5/16/2012 12:00	SOURCE DOWN	--	5/16/2012 12:00	SOURCE DOWN	--	5/16/2012 12:00	0.0068	--
5/16/2012 13:00	SOURCE DOWN	--	5/16/2012 13:00	SOURCE DOWN	--	5/16/2012 13:00	0.0074	--
5/16/2012 14:00	0.0217	--	5/16/2012 14:00	SOURCE DOWN	--	5/16/2012 14:00	0.0072	--
5/16/2012 15:00	0.0072	--	5/16/2012 15:00	SOURCE DOWN	--	5/16/2012 15:00	0.0071	--
5/16/2012 16:00	0.0109	--	5/16/2012 16:00	SOURCE DOWN	--	5/16/2012 16:00	0.0066	--
5/16/2012 17:00	0.0036	--	5/16/2012 17:00	SOURCE DOWN	--	5/16/2012 17:00	0.0067	--
5/16/2012 18:00	0.0217	--	5/16/2012 18:00	SOURCE DOWN	--	5/16/2012 18:00	0.0065	--
5/16/2012 19:00	SOURCE DOWN	--	5/16/2012 19:00	SOURCE DOWN	--	5/16/2012 19:00	0.0070	--
5/16/2012 20:00	SOURCE DOWN	--	5/16/2012 20:00	SOURCE DOWN	--	5/16/2012 20:00	0.0074	--
5/16/2012 21:00	SOURCE DOWN	--	5/16/2012 21:00	SOURCE DOWN	--	5/16/2012 21:00	0.0069	--
5/16/2012 22:00	SOURCE DOWN	--	5/16/2012 22:00	SOURCE DOWN	--	5/16/2012 22:00	0.0065	--
5/16/2012 23:00	SOURCE DOWN	0.0074	5/16/2012 23:00	SOURCE DOWN	0.0097	5/16/2012 23:00	0.0066	0.0112
5/17/2012 0:00	SOURCE DOWN	--	5/17/2012 0:00	SOURCE DOWN	--	5/17/2012 0:00	0.0067	--
5/17/2012 1:00	SOURCE DOWN	--	5/17/2012 1:00	SOURCE DOWN	--	5/17/2012 1:00	0.0071	--
5/17/2012 2:00	SOURCE DOWN	--	5/17/2012 2:00	SOURCE DOWN	--	5/17/2012 2:00	0.0074	--
5/17/2012 3:00	SOURCE DOWN	--	5/17/2012 3:00	SOURCE DOWN	--	5/17/2012 3:00	0.0077	--
5/17/2012 4:00	SOURCE DOWN	--	5/17/2012 4:00	SOURCE DOWN	--	5/17/2012 4:00	0.0078	--
5/17/2012 5:00	SOURCE DOWN	--	5/17/2012 5:00	SOURCE DOWN	--	5/17/2012 5:00	0.0080	--
5/17/2012 6:00	SOURCE DOWN	--	5/17/2012 6:00	SOURCE DOWN	--	5/17/2012 6:00	0.0086	--
5/17/2012 7:00	SOURCE DOWN	--	5/17/2012 7:00	SOURCE DOWN	--	5/17/2012 7:00	0.0093	--
5/17/2012 8:00	SOURCE DOWN	--	5/17/2012 8:00	SOURCE DOWN	--	5/17/2012 8:00	0.0066	--
5/17/2012 9:00	SOURCE DOWN	--	5/17/2012 9:00	SOURCE DOWN	--	5/17/2012 9:00	0.0059	--
5/17/2012 10:00	SOURCE DOWN	--	5/17/2012 10:00	SOURCE DOWN	--	5/17/2012 10:00	0.0063	--
5/17/2012 11:00	SOURCE DOWN	--	5/17/2012 11:00	SOURCE DOWN	--	5/17/2012 11:00	0.0071	--
5/17/2012 12:00	SOURCE DOWN	--	5/17/2012 12:00	SOURCE DOWN	--	5/17/2012 12:00	0.0060	--
5/17/2012 13:00	0.0868	--	5/17/2012 13:00	SOURCE DOWN	--	5/17/2012 13:00	0.0060	--
5/17/2012 14:00	0.0787	--	5/17/2012 14:00	SOURCE DOWN	--	5/17/2012 14:00	0.0058	--
5/17/2012 15:00	0.0789	--	5/17/2012 15:00	SOURCE DOWN	--	5/17/2012 15:00	0.0055	--

Package Boiler No. 1 EPN 81BF01			Package Boiler No. 2 EPN 50BF02			Package Boiler No. 3 EPN 50BF03		
Date	NO_X (lb/MMBtu)	NO_X (lb/MMBtu) 30-day Rolling Average	Date	NO_X (lb/MMBtu)	NO_X (lb/MMBtu) 30-day Rolling Average	Date	NO_X (lb/MMBtu)	NO_X (lb/MMBtu) 30-day Rolling Average
5/17/2012 16:00	0.0803	--	5/17/2012 16:00	SOURCE DOWN	--	5/17/2012 16:00	0.0060	--
5/17/2012 17:00	0.0699	--	5/17/2012 17:00	SOURCE DOWN	--	5/17/2012 17:00	0.0056	--
5/17/2012 18:00	0.0754	--	5/17/2012 18:00	SOURCE DOWN	--	5/17/2012 18:00	0.0055	--
5/17/2012 19:00	0.0504	--	5/17/2012 19:00	SOURCE DOWN	--	5/17/2012 19:00	0.0030	--
5/17/2012 20:00	0.0070	--	5/17/2012 20:00	SOURCE DOWN	--	5/17/2012 20:00	0.0039	--
5/17/2012 21:00	0.0090	--	5/17/2012 21:00	SOURCE DOWN	--	5/17/2012 21:00	0.0058	--
5/17/2012 22:00	0.0090	--	5/17/2012 22:00	SOURCE DOWN	--	5/17/2012 22:00	0.0107	--
5/17/2012 23:00	0.0090	0.0079	5/17/2012 23:00	SOURCE DOWN	0.0096	5/17/2012 23:00	0.0079	0.0112
5/18/2012 0:00	0.0090	--	5/18/2012 0:00	SOURCE DOWN	--	5/18/2012 0:00	0.0091	--
5/18/2012 1:00	0.0091	--	5/18/2012 1:00	SOURCE DOWN	--	5/18/2012 1:00	0.0080	--
5/18/2012 2:00	0.0090	--	5/18/2012 2:00	SOURCE DOWN	--	5/18/2012 2:00	0.0094	--
5/18/2012 3:00	0.0090	--	5/18/2012 3:00	SOURCE DOWN	--	5/18/2012 3:00	0.0091	--
5/18/2012 4:00	0.0090	--	5/18/2012 4:00	SOURCE DOWN	--	5/18/2012 4:00	0.0089	--
5/18/2012 5:00	0.0093	--	5/18/2012 5:00	SOURCE DOWN	--	5/18/2012 5:00	0.0093	--
5/18/2012 6:00	0.0091	--	5/18/2012 6:00	SOURCE DOWN	--	5/18/2012 6:00	0.0099	--
5/18/2012 7:00	0.0092	--	5/18/2012 7:00	SOURCE DOWN	--	5/18/2012 7:00	0.0104	--
5/18/2012 8:00	0.0091	--	5/18/2012 8:00	SOURCE DOWN	--	5/18/2012 8:00	0.0122	--
5/18/2012 9:00	0.0095	--	5/18/2012 9:00	SOURCE DOWN	--	5/18/2012 9:00	0.0124	--
5/18/2012 10:00	0.0093	--	5/18/2012 10:00	SOURCE DOWN	--	5/18/2012 10:00	0.0094	--
5/18/2012 11:00	0.0093	--	5/18/2012 11:00	SOURCE DOWN	--	5/18/2012 11:00	0.0109	--
5/18/2012 12:00	0.0092	--	5/18/2012 12:00	SOURCE DOWN	--	5/18/2012 12:00	0.0117	--
5/18/2012 13:00	0.0095	--	5/18/2012 13:00	SOURCE DOWN	--	5/18/2012 13:00	0.0124	--
5/18/2012 14:00	0.0123	--	5/18/2012 14:00	SOURCE DOWN	--	5/18/2012 14:00	0.0108	--
5/18/2012 15:00	0.0102	--	5/18/2012 15:00	0.0576	--	5/18/2012 15:00	0.0099	--
5/18/2012 16:00	0.0091	--	5/18/2012 16:00	0.0649	--	5/18/2012 16:00	0.0094	--
5/18/2012 17:00	0.0093	--	5/18/2012 17:00	0.0681	--	5/18/2012 17:00	0.0089	--
5/18/2012 18:00	0.0088	--	5/18/2012 18:00	0.0689	--	5/18/2012 18:00	0.0084	--
5/18/2012 19:00	0.0087	--	5/18/2012 19:00	0.0641	--	5/18/2012 19:00	0.0066	--
5/18/2012 20:00	0.0080	--	5/18/2012 20:00	0.0206	--	5/18/2012 20:00	0.0060	--
5/18/2012 21:00	0.0089	--	5/18/2012 21:00	0.0088	--	5/18/2012 21:00	0.0028	--
5/18/2012 22:00	0.0086	--	5/18/2012 22:00	0.0089	--	5/18/2012 22:00	0.0032	--
5/18/2012 23:00	0.0088	0.0079	5/18/2012 23:00	0.0089	0.0101	5/18/2012 23:00	0.0062	0.0111
5/19/2012 0:00	0.0086	--	5/19/2012 0:00	0.0089	--	5/19/2012 0:00	0.0068	--
5/19/2012 1:00	0.0087	--	5/19/2012 1:00	0.0089	--	5/19/2012 1:00	0.0076	--
5/19/2012 2:00	0.0088	--	5/19/2012 2:00	0.0090	--	5/19/2012 2:00	0.0092	--
5/19/2012 3:00	0.0086	--	5/19/2012 3:00	0.0089	--	5/19/2012 3:00	0.0068	--
5/19/2012 4:00	0.0088	--	5/19/2012 4:00	0.0090	--	5/19/2012 4:00	0.0074	--
5/19/2012 5:00	0.0086	--	5/19/2012 5:00	0.0085	--	5/19/2012 5:00	0.0077	--
5/19/2012 6:00	0.0088	--	5/19/2012 6:00	0.0086	--	5/19/2012 6:00	0.0074	--
5/19/2012 7:00	0.0088	--	5/19/2012 7:00	0.0089	--	5/19/2012 7:00	0.0079	--
5/19/2012 8:00	0.0089	--	5/19/2012 8:00	0.0091	--	5/19/2012 8:00	0.0100	--

Package Boiler No. 1 EPN 81BF01			Package Boiler No. 2 EPN 50BF02			Package Boiler No. 3 EPN 50BF03		
Date	NO_X (lb/MMBtu)	NO_X (lb/MMBtu) 30-day Rolling Average	Date	NO_X (lb/MMBtu)	NO_X (lb/MMBtu) 30-day Rolling Average	Date	NO_X (lb/MMBtu)	NO_X (lb/MMBtu) 30-day Rolling Average
5/19/2012 9:00	0.0089	--	5/19/2012 9:00	0.0092	--	5/19/2012 9:00	0.0100	--
5/19/2012 10:00	0.0088	--	5/19/2012 10:00	0.0091	--	5/19/2012 10:00	0.0088	--
5/19/2012 11:00	0.0088	--	5/19/2012 11:00	0.0090	--	5/19/2012 11:00	0.0093	--
5/19/2012 12:00	0.0088	--	5/19/2012 12:00	0.0089	--	5/19/2012 12:00	0.0086	--
5/19/2012 13:00	0.0089	--	5/19/2012 13:00	0.0091	--	5/19/2012 13:00	0.0093	--
5/19/2012 14:00	0.0088	--	5/19/2012 14:00	0.0091	--	5/19/2012 14:00	0.0091	--
5/19/2012 15:00	0.0089	--	5/19/2012 15:00	0.0091	--	5/19/2012 15:00	0.0086	--
5/19/2012 16:00	0.0089	--	5/19/2012 16:00	0.0091	--	5/19/2012 16:00	0.0087	--
5/19/2012 17:00	0.0086	--	5/19/2012 17:00	0.0088	--	5/19/2012 17:00	0.0074	--
5/19/2012 18:00	0.0087	--	5/19/2012 18:00	0.0088	--	5/19/2012 18:00	0.0079	--
5/19/2012 19:00	0.0088	--	5/19/2012 19:00	0.0089	--	5/19/2012 19:00	0.0079	--
5/19/2012 20:00	0.0087	--	5/19/2012 20:00	0.0089	--	5/19/2012 20:00	0.0080	--
5/19/2012 21:00	0.0088	--	5/19/2012 21:00	0.0090	--	5/19/2012 21:00	0.0083	--
5/19/2012 22:00	0.0088	--	5/19/2012 22:00	0.0090	--	5/19/2012 22:00	0.0081	--
5/19/2012 23:00	0.0088	0.0080	5/19/2012 23:00	0.0089	0.0100	5/19/2012 23:00	0.0086	0.0111
5/20/2012 0:00	0.0088	--	5/20/2012 0:00	0.0090	--	5/20/2012 0:00	0.0082	--
5/20/2012 1:00	0.0088	--	5/20/2012 1:00	0.0090	--	5/20/2012 1:00	0.0085	--
5/20/2012 2:00	0.0088	--	5/20/2012 2:00	0.0090	--	5/20/2012 2:00	0.0084	--
5/20/2012 3:00	0.0088	--	5/20/2012 3:00	0.0090	--	5/20/2012 3:00	0.0084	--
5/20/2012 4:00	0.0088	--	5/20/2012 4:00	0.0089	--	5/20/2012 4:00	0.0086	--
5/20/2012 5:00	0.0082	--	5/20/2012 5:00	0.0089	--	5/20/2012 5:00	0.0085	--
5/20/2012 6:00	0.0071	--	5/20/2012 6:00	0.0081	--	5/20/2012 6:00	0.0068	--
5/20/2012 7:00	0.0071	--	5/20/2012 7:00	0.0072	--	5/20/2012 7:00	0.0063	--
5/20/2012 8:00	0.0076	--	5/20/2012 8:00	0.0072	--	5/20/2012 8:00	0.0066	--
5/20/2012 9:00	0.0071	--	5/20/2012 9:00	0.0061	--	5/20/2012 9:00	0.0058	--
5/20/2012 10:00	0.0069	--	5/20/2012 10:00	0.0058	--	5/20/2012 10:00	0.0088	--
5/20/2012 11:00	0.0068	--	5/20/2012 11:00	0.0056	--	5/20/2012 11:00	0.0105	--
5/20/2012 12:00	0.0087	--	5/20/2012 12:00	0.0085	--	5/20/2012 12:00	0.0089	--
5/20/2012 13:00	0.0087	--	5/20/2012 13:00	0.0089	--	5/20/2012 13:00	0.0077	--
5/20/2012 14:00	0.0088	--	5/20/2012 14:00	0.0090	--	5/20/2012 14:00	0.0089	--
5/20/2012 15:00	0.0087	--	5/20/2012 15:00	0.0089	--	5/20/2012 15:00	0.0092	--
5/20/2012 16:00	0.0087	--	5/20/2012 16:00	0.0088	--	5/20/2012 16:00	0.0085	--
5/20/2012 17:00	0.0088	--	5/20/2012 17:00	0.0090	--	5/20/2012 17:00	0.0074	--
5/20/2012 18:00	0.0088	--	5/20/2012 18:00	0.0089	--	5/20/2012 18:00	0.0076	--
5/20/2012 19:00	0.0088	--	5/20/2012 19:00	0.0089	--	5/20/2012 19:00	0.0081	--
5/20/2012 20:00	0.0088	--	5/20/2012 20:00	0.0090	--	5/20/2012 20:00	0.0079	--
5/20/2012 21:00	0.0088	--	5/20/2012 21:00	0.0089	--	5/20/2012 21:00	0.0082	--
5/20/2012 22:00	0.0088	--	5/20/2012 22:00	0.0089	--	5/20/2012 22:00	0.0081	--
5/20/2012 23:00	0.0087	0.0081	5/20/2012 23:00	0.0090	0.0101	5/20/2012 23:00	0.0084	0.0112
5/21/2012 0:00	0.0088	--	5/21/2012 0:00	0.0090	--	5/21/2012 0:00	0.0088	--
5/21/2012 1:00	0.0088	--	5/21/2012 1:00	0.0090	--	5/21/2012 1:00	0.0080	--

Package Boiler No. 1 EPN 81BF01			Package Boiler No. 2 EPN 50BF02			Package Boiler No. 3 EPN 50BF03		
Date	NO_X (lb/MMBtu)	NO_X (lb/MMBtu) 30-day Rolling Average	Date	NO_X (lb/MMBtu)	NO_X (lb/MMBtu) 30-day Rolling Average	Date	NO_X (lb/MMBtu)	NO_X (lb/MMBtu) 30-day Rolling Average
5/21/2012 2:00	0.0088	--	5/21/2012 2:00	0.0089	--	5/21/2012 2:00	0.0078	--
5/21/2012 3:00	0.0088	--	5/21/2012 3:00	0.0090	--	5/21/2012 3:00	0.0085	--
5/21/2012 4:00	0.0088	--	5/21/2012 4:00	0.0090	--	5/21/2012 4:00	0.0088	--
5/21/2012 5:00	0.0091	--	5/21/2012 5:00	0.0090	--	5/21/2012 5:00	0.0098	--
5/21/2012 6:00	0.0089	--	5/21/2012 6:00	0.0090	--	5/21/2012 6:00	0.0087	--
5/21/2012 7:00	0.0088	--	5/21/2012 7:00	0.0091	--	5/21/2012 7:00	0.0085	--
5/21/2012 8:00	0.0089	--	5/21/2012 8:00	0.0094	--	5/21/2012 8:00	0.0119	--
5/21/2012 9:00	0.0087	--	5/21/2012 9:00	0.0092	--	5/21/2012 9:00	0.0099	--
5/21/2012 10:00	0.0086	--	5/21/2012 10:00	0.0088	--	5/21/2012 10:00	0.0083	--
5/21/2012 11:00	0.0085	--	5/21/2012 11:00	0.0087	--	5/21/2012 11:00	0.0093	--
5/21/2012 12:00	0.0086	--	5/21/2012 12:00	0.0088	--	5/21/2012 12:00	0.0052	--
5/21/2012 13:00	0.0086	--	5/21/2012 13:00	0.0087	--	5/21/2012 13:00	0.0062	--
5/21/2012 14:00	0.0086	--	5/21/2012 14:00	0.0088	--	5/21/2012 14:00	0.0087	--
5/21/2012 15:00	0.0086	--	5/21/2012 15:00	0.0088	--	5/21/2012 15:00	0.0087	--
5/21/2012 16:00	0.0085	--	5/21/2012 16:00	0.0087	--	5/21/2012 16:00	0.0072	--
5/21/2012 17:00	0.0086	--	5/21/2012 17:00	0.0087	--	5/21/2012 17:00	0.0081	--
5/21/2012 18:00	0.0085	--	5/21/2012 18:00	0.0086	--	5/21/2012 18:00	0.0080	--
5/21/2012 19:00	0.0086	--	5/21/2012 19:00	0.0085	--	5/21/2012 19:00	0.0075	--
5/21/2012 20:00	0.0088	--	5/21/2012 20:00	0.0086	--	5/21/2012 20:00	0.0054	--
5/21/2012 21:00	0.0089	--	5/21/2012 21:00	0.0089	--	5/21/2012 21:00	0.0062	--
5/21/2012 22:00	0.0088	--	5/21/2012 22:00	0.0088	--	5/21/2012 22:00	0.0082	--
5/21/2012 23:00	0.0088	0.0082	5/21/2012 23:00	0.0087	0.0101	5/21/2012 23:00	0.0076	0.0112
5/22/2012 0:00	0.0087	--	5/22/2012 0:00	0.0089	--	5/22/2012 0:00	0.0036	--
5/22/2012 1:00	0.0088	--	5/22/2012 1:00	0.0087	--	5/22/2012 1:00	0.0030	--
5/22/2012 2:00	0.0088	--	5/22/2012 2:00	0.0088	--	5/22/2012 2:00	0.0038	--
5/22/2012 3:00	0.0088	--	5/22/2012 3:00	0.0087	--	5/22/2012 3:00	0.0055	--
5/22/2012 4:00	0.0088	--	5/22/2012 4:00	0.0088	--	5/22/2012 4:00	0.0080	--
5/22/2012 5:00	0.0086	--	5/22/2012 5:00	0.0089	--	5/22/2012 5:00	0.0073	--
5/22/2012 6:00	0.0087	--	5/22/2012 6:00	0.0088	--	5/22/2012 6:00	0.0088	--
5/22/2012 7:00	0.0089	--	5/22/2012 7:00	0.0094	--	5/22/2012 7:00	0.0065	--
5/22/2012 8:00	0.0091	--	5/22/2012 8:00	0.0097	--	5/22/2012 8:00	0.0110	--
5/22/2012 9:00	0.0175	--	5/22/2012 9:00	0.0087	--	5/22/2012 9:00	0.0096	--
5/22/2012 10:00	0.0038	--	5/22/2012 10:00	0.0086	--	5/22/2012 10:00	0.0086	--
5/22/2012 11:00	0.0080	--	5/22/2012 11:00	0.0087	--	5/22/2012 11:00	0.0092	--
5/22/2012 12:00	0.0084	--	5/22/2012 12:00	0.0086	--	5/22/2012 12:00	0.0076	--
5/22/2012 13:00	0.0086	--	5/22/2012 13:00	0.0086	--	5/22/2012 13:00	0.0097	--
5/22/2012 14:00	0.0091	--	5/22/2012 14:00	0.0091	--	5/22/2012 14:00	0.0109	--
5/22/2012 15:00	0.0082	--	5/22/2012 15:00	0.0085	--	5/22/2012 15:00	0.0083	--
5/22/2012 16:00	0.0084	--	5/22/2012 16:00	0.0085	--	5/22/2012 16:00	0.0075	--
5/22/2012 17:00	0.0084	--	5/22/2012 17:00	0.0084	--	5/22/2012 17:00	0.0072	--
5/22/2012 18:00	0.0084	--	5/22/2012 18:00	0.0085	--	5/22/2012 18:00	0.0050	--

Package Boiler No. 1 EPN 81BF01			Package Boiler No. 2 EPN 50BF02			Package Boiler No. 3 EPN 50BF03		
Date	NO_X (lb/MMBtu)	NO_X (lb/MMBtu) 30-day Rolling Average	Date	NO_X (lb/MMBtu)	NO_X (lb/MMBtu) 30-day Rolling Average	Date	NO_X (lb/MMBtu)	NO_X (lb/MMBtu) 30-day Rolling Average
5/22/2012 19:00	0.0084	--	5/22/2012 19:00	0.0084	--	5/22/2012 19:00	0.0068	--
5/22/2012 20:00	0.0086	--	5/22/2012 20:00	0.0088	--	5/22/2012 20:00	0.0085	--
5/22/2012 21:00	0.0084	--	5/22/2012 21:00	0.0087	--	5/22/2012 21:00	0.0096	--
5/22/2012 22:00	0.0085	--	5/22/2012 22:00	0.0085	--	5/22/2012 22:00	0.0084	--
5/22/2012 23:00	0.0085	0.0083	5/22/2012 23:00	0.0086	0.0102	5/22/2012 23:00	0.0080	0.0112
5/23/2012 0:00	0.0084	--	5/23/2012 0:00	0.0086	--	5/23/2012 0:00	0.0078	--
5/23/2012 1:00	0.0085	--	5/23/2012 1:00	0.0086	--	5/23/2012 1:00	0.0082	--
5/23/2012 2:00	0.0084	--	5/23/2012 2:00	0.0084	--	5/23/2012 2:00	0.0086	--
5/23/2012 3:00	0.0085	--	5/23/2012 3:00	0.0084	--	5/23/2012 3:00	0.0119	--
5/23/2012 4:00	0.0085	--	5/23/2012 4:00	0.0086	--	5/23/2012 4:00	0.0099	--
5/23/2012 5:00	0.0087	--	5/23/2012 5:00	0.0094	--	5/23/2012 5:00	0.0094	--
5/23/2012 6:00	0.0086	--	5/23/2012 6:00	0.0087	--	5/23/2012 6:00	0.0094	--
5/23/2012 7:00	0.0086	--	5/23/2012 7:00	0.0088	--	5/23/2012 7:00	0.0098	--
5/23/2012 8:00	0.0086	--	5/23/2012 8:00	0.0087	--	5/23/2012 8:00	0.0103	--
5/23/2012 9:00	0.0086	--	5/23/2012 9:00	0.0087	--	5/23/2012 9:00	0.0098	--
5/23/2012 10:00	0.0086	--	5/23/2012 10:00	0.0087	--	5/23/2012 10:00	0.0095	--
5/23/2012 11:00	0.0086	--	5/23/2012 11:00	0.0088	--	5/23/2012 11:00	0.0095	--
5/23/2012 12:00	0.0086	--	5/23/2012 12:00	0.0088	--	5/23/2012 12:00	0.0085	--
5/23/2012 13:00	0.0086	--	5/23/2012 13:00	0.0088	--	5/23/2012 13:00	0.0083	--
5/23/2012 14:00	0.0085	--	5/23/2012 14:00	0.0086	--	5/23/2012 14:00	0.0075	--
5/23/2012 15:00	0.0085	--	5/23/2012 15:00	0.0087	--	5/23/2012 15:00	0.0072	--
5/23/2012 16:00	0.0085	--	5/23/2012 16:00	0.0086	--	5/23/2012 16:00	0.0069	--
5/23/2012 17:00	0.0085	--	5/23/2012 17:00	0.0086	--	5/23/2012 17:00	0.0076	--
5/23/2012 18:00	0.0085	--	5/23/2012 18:00	0.0086	--	5/23/2012 18:00	0.0079	--
5/23/2012 19:00	0.0084	--	5/23/2012 19:00	0.0085	--	5/23/2012 19:00	0.0079	--
5/23/2012 20:00	0.0085	--	5/23/2012 20:00	0.0086	--	5/23/2012 20:00	0.0082	--
5/23/2012 21:00	0.0085	--	5/23/2012 21:00	0.0086	--	5/23/2012 21:00	0.0076	--
5/23/2012 22:00	0.0085	--	5/23/2012 22:00	0.0087	--	5/23/2012 22:00	0.0079	--
5/23/2012 23:00	0.0085	0.0083	5/23/2012 23:00	0.0086	0.0102	5/23/2012 23:00	0.0087	0.0113
5/24/2012 0:00	0.0086	--	5/24/2012 0:00	0.0088	--	5/24/2012 0:00	0.0089	--
5/24/2012 1:00	0.0085	--	5/24/2012 1:00	0.0086	--	5/24/2012 1:00	0.0079	--
5/24/2012 2:00	0.0085	--	5/24/2012 2:00	0.0087	--	5/24/2012 2:00	0.0090	--
5/24/2012 3:00	0.0085	--	5/24/2012 3:00	0.0086	--	5/24/2012 3:00	0.0090	--
5/24/2012 4:00	0.0085	--	5/24/2012 4:00	0.0086	--	5/24/2012 4:00	0.0083	--
5/24/2012 5:00	0.0087	--	5/24/2012 5:00	0.0087	--	5/24/2012 5:00	0.0076	--
5/24/2012 6:00	0.0085	--	5/24/2012 6:00	0.0087	--	5/24/2012 6:00	0.0089	--
5/24/2012 7:00	0.0086	--	5/24/2012 7:00	0.0087	--	5/24/2012 7:00	0.0094	--
5/24/2012 8:00	0.0086	--	5/24/2012 8:00	0.0088	--	5/24/2012 8:00	0.0116	--
5/24/2012 9:00	0.0086	--	5/24/2012 9:00	0.0089	--	5/24/2012 9:00	0.0093	--
5/24/2012 10:00	0.0086	--	5/24/2012 10:00	0.0087	--	5/24/2012 10:00	0.0087	--
5/24/2012 11:00	0.0086	--	5/24/2012 11:00	0.0087	--	5/24/2012 11:00	0.0087	--

Package Boiler No. 1 EPN 81BF01			Package Boiler No. 2 EPN 50BF02			Package Boiler No. 3 EPN 50BF03		
Date	NO_X (lb/MMBtu)	NO_X (lb/MMBtu) 30-day Rolling Average	Date	NO_X (lb/MMBtu)	NO_X (lb/MMBtu) 30-day Rolling Average	Date	NO_X (lb/MMBtu)	NO_X (lb/MMBtu) 30-day Rolling Average
5/24/2012 12:00	0.0086	--	5/24/2012 12:00	0.0087	--	5/24/2012 12:00	0.0092	--
5/24/2012 13:00	0.0086	--	5/24/2012 13:00	0.0087	--	5/24/2012 13:00	0.0090	--
5/24/2012 14:00	0.0085	--	5/24/2012 14:00	0.0086	--	5/24/2012 14:00	0.0088	--
5/24/2012 15:00	0.0086	--	5/24/2012 15:00	0.0087	--	5/24/2012 15:00	0.0080	--
5/24/2012 16:00	0.0085	--	5/24/2012 16:00	0.0086	--	5/24/2012 16:00	0.0096	--
5/24/2012 17:00	0.0085	--	5/24/2012 17:00	0.0086	--	5/24/2012 17:00	0.0087	--
5/24/2012 18:00	0.0085	--	5/24/2012 18:00	0.0086	--	5/24/2012 18:00	0.0089	--
5/24/2012 19:00	0.0085	--	5/24/2012 19:00	0.0086	--	5/24/2012 19:00	0.0084	--
5/24/2012 20:00	0.0085	--	5/24/2012 20:00	0.0087	--	5/24/2012 20:00	0.0087	--
5/24/2012 21:00	0.0085	--	5/24/2012 21:00	0.0086	--	5/24/2012 21:00	0.0087	--
5/24/2012 22:00	0.0086	--	5/24/2012 22:00	0.0087	--	5/24/2012 22:00	0.0086	--
5/24/2012 23:00	0.0085	0.0083	5/24/2012 23:00	0.0086	0.0101	5/24/2012 23:00	0.0089	0.0113
5/25/2012 0:00	0.0086	--	5/25/2012 0:00	0.0087	--	5/25/2012 0:00	0.0082	--
5/25/2012 1:00	0.0085	--	5/25/2012 1:00	0.0087	--	5/25/2012 1:00	0.0097	--
5/25/2012 2:00	0.0085	--	5/25/2012 2:00	0.0087	--	5/25/2012 2:00	0.0088	--
5/25/2012 3:00	0.0085	--	5/25/2012 3:00	0.0086	--	5/25/2012 3:00	0.0083	--
5/25/2012 4:00	0.0086	--	5/25/2012 4:00	0.0089	--	5/25/2012 4:00	0.0084	--
5/25/2012 5:00	0.0084	--	5/25/2012 5:00	0.0088	--	5/25/2012 5:00	0.0094	--
5/25/2012 6:00	0.0086	--	5/25/2012 6:00	0.0087	--	5/25/2012 6:00	0.0099	--
5/25/2012 7:00	0.0085	--	5/25/2012 7:00	0.0087	--	5/25/2012 7:00	0.0094	--
5/25/2012 8:00	0.0089	--	5/25/2012 8:00	0.0091	--	5/25/2012 8:00	0.0099	--
5/25/2012 9:00	0.0088	--	5/25/2012 9:00	0.0089	--	5/25/2012 9:00	0.0101	--
5/25/2012 10:00	0.0084	--	5/25/2012 10:00	0.0085	--	5/25/2012 10:00	0.0085	--
5/25/2012 11:00	0.0085	--	5/25/2012 11:00	0.0087	--	5/25/2012 11:00	0.0073	--
5/25/2012 12:00	0.0085	--	5/25/2012 12:00	0.0087	--	5/25/2012 12:00	0.0086	--
5/25/2012 13:00	0.0086	--	5/25/2012 13:00	0.0087	--	5/25/2012 13:00	0.0090	--
5/25/2012 14:00	0.0086	--	5/25/2012 14:00	0.0086	--	5/25/2012 14:00	0.0072	--
5/25/2012 15:00	0.0090	--	5/25/2012 15:00	0.0094	--	5/25/2012 15:00	0.0110	--
5/25/2012 16:00	0.0080	--	5/25/2012 16:00	0.0079	--	5/25/2012 16:00	0.0051	--
5/25/2012 17:00	0.0085	--	5/25/2012 17:00	0.0086	--	5/25/2012 17:00	0.0052	--
5/25/2012 18:00	0.0086	--	5/25/2012 18:00	0.0087	--	5/25/2012 18:00	0.0061	--
5/25/2012 19:00	0.0085	--	5/25/2012 19:00	0.0086	--	5/25/2012 19:00	0.0077	--
5/25/2012 20:00	0.0086	--	5/25/2012 20:00	0.0087	--	5/25/2012 20:00	0.0082	--
5/25/2012 21:00	0.0086	--	5/25/2012 21:00	0.0087	--	5/25/2012 21:00	0.0083	--
5/25/2012 22:00	0.0086	--	5/25/2012 22:00	0.0087	--	5/25/2012 22:00	0.0086	--
5/25/2012 23:00	0.0086	0.0084	5/25/2012 23:00	0.0087	0.0101	5/25/2012 23:00	0.0087	0.0113
5/26/2012 0:00	0.0085	--	5/26/2012 0:00	0.0087	--	5/26/2012 0:00	0.0087	--
5/26/2012 1:00	0.0086	--	5/26/2012 1:00	0.0087	--	5/26/2012 1:00	0.0085	--
5/26/2012 2:00	0.0086	--	5/26/2012 2:00	0.0087	--	5/26/2012 2:00	0.0087	--
5/26/2012 3:00	0.0086	--	5/26/2012 3:00	0.0087	--	5/26/2012 3:00	0.0084	--
5/26/2012 4:00	0.0086	--	5/26/2012 4:00	0.0087	--	5/26/2012 4:00	0.0085	--

Package Boiler No. 1 EPN 81BF01			Package Boiler No. 2 EPN 50BF02			Package Boiler No. 3 EPN 50BF03		
Date	NO_X (lb/MMBtu)	NO_X (lb/MMBtu) 30-day Rolling Average	Date	NO_X (lb/MMBtu)	NO_X (lb/MMBtu) 30-day Rolling Average	Date	NO_X (lb/MMBtu)	NO_X (lb/MMBtu) 30-day Rolling Average
5/26/2012 5:00	0.0086	--	5/26/2012 5:00	0.0088	--	5/26/2012 5:00	0.0085	--
5/26/2012 6:00	0.0086	--	5/26/2012 6:00	0.0087	--	5/26/2012 6:00	0.0086	--
5/26/2012 7:00	0.0086	--	5/26/2012 7:00	0.0088	--	5/26/2012 7:00	0.0085	--
5/26/2012 8:00	0.0087	--	5/26/2012 8:00	0.0087	--	5/26/2012 8:00	0.0093	--
5/26/2012 9:00	0.0087	--	5/26/2012 9:00	0.0089	--	5/26/2012 9:00	0.0100	--
5/26/2012 10:00	0.0087	--	5/26/2012 10:00	0.0089	--	5/26/2012 10:00	0.0092	--
5/26/2012 11:00	0.0086	--	5/26/2012 11:00	0.0087	--	5/26/2012 11:00	0.0084	--
5/26/2012 12:00	0.0085	--	5/26/2012 12:00	0.0085	--	5/26/2012 12:00	0.0078	--
5/26/2012 13:00	0.0086	--	5/26/2012 13:00	0.0088	--	5/26/2012 13:00	0.0086	--
5/26/2012 14:00	0.0086	--	5/26/2012 14:00	0.0088	--	5/26/2012 14:00	0.0090	--
5/26/2012 15:00	0.0085	--	5/26/2012 15:00	0.0085	--	5/26/2012 15:00	0.0083	--
5/26/2012 16:00	0.0086	--	5/26/2012 16:00	0.0087	--	5/26/2012 16:00	0.0085	--
5/26/2012 17:00	0.0085	--	5/26/2012 17:00	0.0087	--	5/26/2012 17:00	0.0081	--
5/26/2012 18:00	0.0085	--	5/26/2012 18:00	0.0086	--	5/26/2012 18:00	0.0077	--
5/26/2012 19:00	0.0085	--	5/26/2012 19:00	0.0086	--	5/26/2012 19:00	0.0080	--
5/26/2012 20:00	0.0086	--	5/26/2012 20:00	0.0087	--	5/26/2012 20:00	0.0085	--
5/26/2012 21:00	0.0085	--	5/26/2012 21:00	0.0087	--	5/26/2012 21:00	0.0082	--
5/26/2012 22:00	0.0086	--	5/26/2012 22:00	0.0087	--	5/26/2012 22:00	0.0074	--
5/26/2012 23:00	0.0085	0.0084	5/26/2012 23:00	0.0086	0.0101	5/26/2012 23:00	0.0080	0.0112
5/27/2012 0:00	0.0085	--	5/27/2012 0:00	0.0087	--	5/27/2012 0:00	0.0080	--
5/27/2012 1:00	0.0086	--	5/27/2012 1:00	0.0087	--	5/27/2012 1:00	0.0084	--
5/27/2012 2:00	0.0086	--	5/27/2012 2:00	0.0087	--	5/27/2012 2:00	0.0084	--
5/27/2012 3:00	0.0086	--	5/27/2012 3:00	0.0087	--	5/27/2012 3:00	0.0086	--
5/27/2012 4:00	0.0086	--	5/27/2012 4:00	0.0085	--	5/27/2012 4:00	0.0093	--
5/27/2012 5:00	0.0090	--	5/27/2012 5:00	0.0084	--	5/27/2012 5:00	0.0093	--
5/27/2012 6:00	0.0086	--	5/27/2012 6:00	0.0086	--	5/27/2012 6:00	0.0088	--
5/27/2012 7:00	0.0087	--	5/27/2012 7:00	0.0088	--	5/27/2012 7:00	0.0093	--
5/27/2012 8:00	0.0087	--	5/27/2012 8:00	0.0089	--	5/27/2012 8:00	0.0099	--
5/27/2012 9:00	0.0087	--	5/27/2012 9:00	0.0089	--	5/27/2012 9:00	0.0103	--
5/27/2012 10:00	0.0086	--	5/27/2012 10:00	0.0088	--	5/27/2012 10:00	0.0101	--
5/27/2012 11:00	0.0086	--	5/27/2012 11:00	0.0087	--	5/27/2012 11:00	0.0094	--
5/27/2012 12:00	0.0086	--	5/27/2012 12:00	0.0089	--	5/27/2012 12:00	0.0089	--
5/27/2012 13:00	0.0086	--	5/27/2012 13:00	0.0087	--	5/27/2012 13:00	0.0088	--
5/27/2012 14:00	0.0086	--	5/27/2012 14:00	0.0086	--	5/27/2012 14:00	0.0089	--
5/27/2012 15:00	0.0085	--	5/27/2012 15:00	0.0087	--	5/27/2012 15:00	0.0078	--
5/27/2012 16:00	0.0086	--	5/27/2012 16:00	0.0087	--	5/27/2012 16:00	0.0081	--
5/27/2012 17:00	0.0085	--	5/27/2012 17:00	0.0087	--	5/27/2012 17:00	0.0088	--
5/27/2012 18:00	0.0084	--	5/27/2012 18:00	0.0084	--	5/27/2012 18:00	0.0078	--
5/27/2012 19:00	0.0085	--	5/27/2012 19:00	0.0086	--	5/27/2012 19:00	0.0071	--
5/27/2012 20:00	0.0085	--	5/27/2012 20:00	0.0086	--	5/27/2012 20:00	0.0071	--
5/27/2012 21:00	0.0085	--	5/27/2012 21:00	0.0086	--	5/27/2012 21:00	0.0076	--

Package Boiler No. 1 EPN 81BF01			Package Boiler No. 2 EPN 50BF02			Package Boiler No. 3 EPN 50BF03		
Date	NO_X (lb/MMBtu)	NO_X (lb/MMBtu) 30-day Rolling Average	Date	NO_X (lb/MMBtu)	NO_X (lb/MMBtu) 30-day Rolling Average	Date	NO_X (lb/MMBtu)	NO_X (lb/MMBtu) 30-day Rolling Average
5/27/2012 22:00	0.0086	--	5/27/2012 22:00	0.0087	--	5/27/2012 22:00	0.0077	--
5/27/2012 23:00	0.0086	0.0084	5/27/2012 23:00	0.0087	0.0101	5/27/2012 23:00	0.0086	0.0112
5/28/2012 0:00	0.0085	--	5/28/2012 0:00	0.0087	--	5/28/2012 0:00	0.0082	--
5/28/2012 1:00	0.0086	--	5/28/2012 1:00	0.0087	--	5/28/2012 1:00	0.0081	--
5/28/2012 2:00	0.0086	--	5/28/2012 2:00	0.0087	--	5/28/2012 2:00	0.0067	--
5/28/2012 3:00	0.0085	--	5/28/2012 3:00	0.0087	--	5/28/2012 3:00	0.0073	--
5/28/2012 4:00	0.0086	--	5/28/2012 4:00	0.0087	--	5/28/2012 4:00	0.0083	--
5/28/2012 5:00	0.0088	--	5/28/2012 5:00	0.0088	--	5/28/2012 5:00	0.0094	--
5/28/2012 6:00	0.0086	--	5/28/2012 6:00	0.0088	--	5/28/2012 6:00	0.0101	--
5/28/2012 7:00	0.0086	--	5/28/2012 7:00	0.0087	--	5/28/2012 7:00	0.0099	--
5/28/2012 8:00	0.0087	--	5/28/2012 8:00	0.0089	--	5/28/2012 8:00	0.0102	--
5/28/2012 9:00	0.0087	--	5/28/2012 9:00	0.0088	--	5/28/2012 9:00	0.0108	--
5/28/2012 10:00	0.0086	--	5/28/2012 10:00	0.0088	--	5/28/2012 10:00	0.0090	--
5/28/2012 11:00	0.0087	--	5/28/2012 11:00	0.0089	--	5/28/2012 11:00	0.0095	--
5/28/2012 12:00	0.0086	--	5/28/2012 12:00	0.0087	--	5/28/2012 12:00	0.0095	--
5/28/2012 13:00	0.0086	--	5/28/2012 13:00	0.0087	--	5/28/2012 13:00	0.0088	--
5/28/2012 14:00	0.0086	--	5/28/2012 14:00	0.0088	--	5/28/2012 14:00	0.0088	--
5/28/2012 15:00	0.0091	--	5/28/2012 15:00	0.0092	--	5/28/2012 15:00	0.0097	--
5/28/2012 16:00	0.0080	--	5/28/2012 16:00	0.0082	--	5/28/2012 16:00	0.0077	--
5/28/2012 17:00	0.0083	--	5/28/2012 17:00	0.0082	--	5/28/2012 17:00	0.0072	--
5/28/2012 18:00	0.0084	--	5/28/2012 18:00	0.0084	--	5/28/2012 18:00	0.0069	--
5/28/2012 19:00	0.0085	--	5/28/2012 19:00	0.0087	--	5/28/2012 19:00	0.0066	--
5/28/2012 20:00	0.0086	--	5/28/2012 20:00	0.0086	--	5/28/2012 20:00	0.0084	--
5/28/2012 21:00	0.0085	--	5/28/2012 21:00	0.0086	--	5/28/2012 21:00	0.0084	--
5/28/2012 22:00	0.0086	--	5/28/2012 22:00	0.0087	--	5/28/2012 22:00	0.0089	--
5/28/2012 23:00	0.0086	0.0084	5/28/2012 23:00	0.0087	0.0101	5/28/2012 23:00	0.0081	0.0112
5/29/2012 0:00	0.0086	--	5/29/2012 0:00	0.0087	--	5/29/2012 0:00	0.0082	--
5/29/2012 1:00	0.0085	--	5/29/2012 1:00	0.0087	--	5/29/2012 1:00	0.0077	--
5/29/2012 2:00	0.0086	--	5/29/2012 2:00	0.0085	--	5/29/2012 2:00	0.0084	--
5/29/2012 3:00	0.0086	--	5/29/2012 3:00	0.0085	--	5/29/2012 3:00	0.0048	--
5/29/2012 4:00	0.0086	--	5/29/2012 4:00	0.0086	--	5/29/2012 4:00	0.0066	--
5/29/2012 5:00	0.0089	--	5/29/2012 5:00	0.0089	--	5/29/2012 5:00	0.0081	--
5/29/2012 6:00	0.0086	--	5/29/2012 6:00	0.0087	--	5/29/2012 6:00	0.0096	--
5/29/2012 7:00	0.0086	--	5/29/2012 7:00	0.0087	--	5/29/2012 7:00	0.0096	--
5/29/2012 8:00	DOWNTIME	--	5/29/2012 8:00	0.0088	--	5/29/2012 8:00	0.0093	--
5/29/2012 9:00	DOWNTIME	--	5/29/2012 9:00	0.0088	--	5/29/2012 9:00	0.0096	--
5/29/2012 10:00	DOWNTIME	--	5/29/2012 10:00	0.0089	--	5/29/2012 10:00	0.0092	--
5/29/2012 11:00	0.0087	--	5/29/2012 11:00	0.0089	--	5/29/2012 11:00	0.0081	--
5/29/2012 12:00	0.0086	--	5/29/2012 12:00	0.0087	--	5/29/2012 12:00	0.0084	--
5/29/2012 13:00	0.0086	--	5/29/2012 13:00	0.0087	--	5/29/2012 13:00	0.0085	--
5/29/2012 14:00	0.0086	--	5/29/2012 14:00	0.0087	--	5/29/2012 14:00	0.0084	--

Package Boiler No. 1 EPN 81BF01			Package Boiler No. 2 EPN 50BF02			Package Boiler No. 3 EPN 50BF03		
Date	NO_X (lb/MMBtu)	NO_X (lb/MMBtu) 30-day Rolling Average	Date	NO_X (lb/MMBtu)	NO_X (lb/MMBtu) 30-day Rolling Average	Date	NO_X (lb/MMBtu)	NO_X (lb/MMBtu) 30-day Rolling Average
5/29/2012 15:00	0.0098	--	5/29/2012 15:00	0.0090	--	5/29/2012 15:00	0.0128	--
5/29/2012 16:00	0.0058	--	5/29/2012 16:00	0.0054	--	5/29/2012 16:00	0.0026	--
5/29/2012 17:00	0.0083	--	5/29/2012 17:00	0.0082	--	5/29/2012 17:00	0.0058	--
5/29/2012 18:00	0.0083	--	5/29/2012 18:00	0.0085	--	5/29/2012 18:00	0.0073	--
5/29/2012 19:00	0.0085	--	5/29/2012 19:00	0.0086	--	5/29/2012 19:00	0.0069	--
5/29/2012 20:00	0.0085	--	5/29/2012 20:00	0.0086	--	5/29/2012 20:00	0.0077	--
5/29/2012 21:00	0.0085	--	5/29/2012 21:00	0.0086	--	5/29/2012 21:00	0.0074	--
5/29/2012 22:00	0.0085	--	5/29/2012 22:00	0.0087	--	5/29/2012 22:00	0.0082	--
5/29/2012 23:00	0.0086	0.0084	5/29/2012 23:00	0.0086	0.0100	5/29/2012 23:00	0.0080	0.0112
5/30/2012 0:00	0.0086	--	5/30/2012 0:00	0.0087	--	5/30/2012 0:00	0.0079	--
5/30/2012 1:00	0.0087	--	5/30/2012 1:00	0.0088	--	5/30/2012 1:00	0.0082	--
5/30/2012 2:00	0.0086	--	5/30/2012 2:00	0.0087	--	5/30/2012 2:00	0.0092	--
5/30/2012 3:00	0.0086	--	5/30/2012 3:00	0.0088	--	5/30/2012 3:00	0.0096	--
5/30/2012 4:00	0.0086	--	5/30/2012 4:00	0.0087	--	5/30/2012 4:00	0.0092	--
5/30/2012 5:00	0.0091	--	5/30/2012 5:00	0.0087	--	5/30/2012 5:00	0.0076	--
5/30/2012 6:00	0.0085	--	5/30/2012 6:00	0.0083	--	5/30/2012 6:00	0.0079	--
5/30/2012 7:00	0.0087	--	5/30/2012 7:00	0.0087	--	5/30/2012 7:00	0.0078	--
5/30/2012 8:00	0.1129	--	5/30/2012 8:00	0.0088	--	5/30/2012 8:00	0.0085	--
5/30/2012 9:00	DOWNTIME	--	5/30/2012 9:00	0.0090	--	5/30/2012 9:00	0.0092	--
5/30/2012 10:00	0.0088	--	5/30/2012 10:00	0.0091	--	5/30/2012 10:00	0.0082	--
5/30/2012 11:00	0.0086	--	5/30/2012 11:00	0.0088	--	5/30/2012 11:00	0.0093	--
5/30/2012 12:00	0.0086	--	5/30/2012 12:00	0.0087	--	5/30/2012 12:00	0.0088	--
5/30/2012 13:00	0.0085	--	5/30/2012 13:00	0.0086	--	5/30/2012 13:00	0.0077	--
5/30/2012 14:00	0.0084	--	5/30/2012 14:00	0.0085	--	5/30/2012 14:00	0.0079	--
5/30/2012 15:00	0.0085	--	5/30/2012 15:00	0.0086	--	5/30/2012 15:00	0.0081	--
5/30/2012 16:00	0.0087	--	5/30/2012 16:00	0.0088	--	5/30/2012 16:00	0.0092	--
5/30/2012 17:00	0.0086	--	5/30/2012 17:00	0.0087	--	5/30/2012 17:00	0.0076	--
5/30/2012 18:00	0.0083	--	5/30/2012 18:00	0.0085	--	5/30/2012 18:00	0.0080	--
5/30/2012 19:00	0.0084	--	5/30/2012 19:00	0.0084	--	5/30/2012 19:00	0.0077	--
5/30/2012 20:00	0.0085	--	5/30/2012 20:00	0.0085	--	5/30/2012 20:00	0.0073	--
5/30/2012 21:00	0.0085	--	5/30/2012 21:00	0.0086	--	5/30/2012 21:00	0.0081	--
5/30/2012 22:00	0.0086	--	5/30/2012 22:00	0.0087	--	5/30/2012 22:00	0.0085	--
5/30/2012 23:00	0.0086	0.0085	5/30/2012 23:00	0.0087	0.0100	5/30/2012 23:00	0.0087	0.0111
5/31/2012 0:00	0.0085	--	5/31/2012 0:00	0.0084	--	5/31/2012 0:00	0.0078	--
5/31/2012 1:00	0.0085	--	5/31/2012 1:00	0.0086	--	5/31/2012 1:00	0.0088	--
5/31/2012 2:00	0.0086	--	5/31/2012 2:00	0.0086	--	5/31/2012 2:00	0.0096	--
5/31/2012 3:00	0.0086	--	5/31/2012 3:00	0.0087	--	5/31/2012 3:00	0.0095	--
5/31/2012 4:00	0.0087	--	5/31/2012 4:00	0.0087	--	5/31/2012 4:00	0.0091	--
5/31/2012 5:00	0.0094	--	5/31/2012 5:00	0.0088	--	5/31/2012 5:00	0.0106	--
5/31/2012 6:00	0.0086	--	5/31/2012 6:00	0.0305	--	5/31/2012 6:00	0.0077	--
5/31/2012 7:00	0.0086	--	5/31/2012 7:00	DOWNTIME	--	5/31/2012 7:00	0.0071	--

Package Boiler No. 1 EPN 81BF01			Package Boiler No. 2 EPN 50BF02			Package Boiler No. 3 EPN 50BF03		
Date	NO_X (lb/MMBtu)	NO_X (lb/MMBtu) 30-day Rolling Average	Date	NO_X (lb/MMBtu)	NO_X (lb/MMBtu) 30-day Rolling Average	Date	NO_X (lb/MMBtu)	NO_X (lb/MMBtu) 30-day Rolling Average
5/31/2012 8:00	0.0091	--	5/31/2012 8:00	0.0098	--	5/31/2012 8:00	0.0072	--
5/31/2012 9:00	0.0087	--	5/31/2012 9:00	0.0086	--	5/31/2012 9:00	DOWNTIME	--
5/31/2012 10:00	0.0086	--	5/31/2012 10:00	0.0086	--	5/31/2012 10:00	DOWNTIME	--
5/31/2012 11:00	0.0086	--	5/31/2012 11:00	0.0080	--	5/31/2012 11:00	0.0091	--
5/31/2012 12:00	0.0083	--	5/31/2012 12:00	0.0083	--	5/31/2012 12:00	0.0082	--
5/31/2012 13:00	0.0087	--	5/31/2012 13:00	0.0088	--	5/31/2012 13:00	0.0086	--
5/31/2012 14:00	0.0087	--	5/31/2012 14:00	0.0089	--	5/31/2012 14:00	0.0081	--
5/31/2012 15:00	0.0086	--	5/31/2012 15:00	0.0087	--	5/31/2012 15:00	0.0083	--
5/31/2012 16:00	0.0087	--	5/31/2012 16:00	0.0090	--	5/31/2012 16:00	0.0103	--
5/31/2012 17:00	0.0087	--	5/31/2012 17:00	0.0087	--	5/31/2012 17:00	0.0092	--
5/31/2012 18:00	0.0084	--	5/31/2012 18:00	0.0085	--	5/31/2012 18:00	0.0084	--
5/31/2012 19:00	0.0086	--	5/31/2012 19:00	0.0087	--	5/31/2012 19:00	0.0083	--
5/31/2012 20:00	0.0085	--	5/31/2012 20:00	0.0087	--	5/31/2012 20:00	0.0088	--
5/31/2012 21:00	0.0085	--	5/31/2012 21:00	0.0086	--	5/31/2012 21:00	0.0085	--
5/31/2012 22:00	0.0086	--	5/31/2012 22:00	0.0087	--	5/31/2012 22:00	0.0084	--
5/31/2012 23:00	0.0086	0.0086	5/31/2012 23:00	0.0087	0.0100	5/31/2012 23:00	0.0092	0.0114
6/1/2012 0:00	0.0086	--	6/1/2012 0:00	0.0087	--	6/1/2012 0:00	0.0096	--
6/1/2012 1:00	0.0085	--	6/1/2012 1:00	0.0087	--	6/1/2012 1:00	0.0091	--
6/1/2012 2:00	0.0086	--	6/1/2012 2:00	0.0086	--	6/1/2012 2:00	0.0089	--
6/1/2012 3:00	0.0085	--	6/1/2012 3:00	0.0087	--	6/1/2012 3:00	0.0092	--
6/1/2012 4:00	0.0086	--	6/1/2012 4:00	0.0087	--	6/1/2012 4:00	0.0092	--
6/1/2012 5:00	0.0076	--	6/1/2012 5:00	0.0093	--	6/1/2012 5:00	0.0088	--
6/1/2012 6:00	0.0088	--	6/1/2012 6:00	0.0090	--	6/1/2012 6:00	0.0099	--
6/1/2012 7:00	0.0086	--	6/1/2012 7:00	0.0087	--	6/1/2012 7:00	0.0087	--
6/1/2012 8:00	0.0086	--	6/1/2012 8:00	0.0088	--	6/1/2012 8:00	0.0073	--
6/1/2012 9:00	0.0083	--	6/1/2012 9:00	0.0088	--	6/1/2012 9:00	0.0074	--
6/1/2012 10:00	0.0086	--	6/1/2012 10:00	0.0088	--	6/1/2012 10:00	0.0084	--
6/1/2012 11:00	0.0086	--	6/1/2012 11:00	0.0086	--	6/1/2012 11:00	0.0090	--
6/1/2012 12:00	0.0086	--	6/1/2012 12:00	0.0088	--	6/1/2012 12:00	0.0092	--
6/1/2012 13:00	0.0086	--	6/1/2012 13:00	0.0088	--	6/1/2012 13:00	0.0090	--
6/1/2012 14:00	0.0083	--	6/1/2012 14:00	0.0093	--	6/1/2012 14:00	0.0075	--
6/1/2012 15:00	0.0084	--	6/1/2012 15:00	0.0086	--	6/1/2012 15:00	0.0058	--
6/1/2012 16:00	0.0083	--	6/1/2012 16:00	0.0083	--	6/1/2012 16:00	0.0055	--
6/1/2012 17:00	0.0085	--	6/1/2012 17:00	0.0086	--	6/1/2012 17:00	0.0069	--
6/1/2012 18:00	0.0085	--	6/1/2012 18:00	0.0086	--	6/1/2012 18:00	0.0078	--
6/1/2012 19:00	0.0084	--	6/1/2012 19:00	0.0084	--	6/1/2012 19:00	0.0072	--
6/1/2012 20:00	0.0086	--	6/1/2012 20:00	0.0086	--	6/1/2012 20:00	0.0072	--
6/1/2012 21:00	0.0083	--	6/1/2012 21:00	0.0082	--	6/1/2012 21:00	0.0071	--
6/1/2012 22:00	0.0085	--	6/1/2012 22:00	0.0085	--	6/1/2012 22:00	0.0073	--
6/1/2012 23:00	0.0086	0.0086	6/1/2012 23:00	0.0086	0.0100	6/1/2012 23:00	0.0087	0.0116
6/2/2012 0:00	0.0086	--	6/2/2012 0:00	0.0086	--	6/2/2012 0:00	0.0088	--

Package Boiler No. 1 EPN 81BF01			Package Boiler No. 2 EPN 50BF02			Package Boiler No. 3 EPN 50BF03		
Date	NO_X (lb/MMBtu)	NO_X (lb/MMBtu) 30-day Rolling Average	Date	NO_X (lb/MMBtu)	NO_X (lb/MMBtu) 30-day Rolling Average	Date	NO_X (lb/MMBtu)	NO_X (lb/MMBtu) 30-day Rolling Average
6/2/2012 1:00	0.0086	--	6/2/2012 1:00	0.0087	--	6/2/2012 1:00	0.0086	--
6/2/2012 2:00	0.0086	--	6/2/2012 2:00	0.0087	--	6/2/2012 2:00	0.0088	--
6/2/2012 3:00	0.0086	--	6/2/2012 3:00	0.0087	--	6/2/2012 3:00	0.0089	--
6/2/2012 4:00	0.0086	--	6/2/2012 4:00	0.0087	--	6/2/2012 4:00	0.0089	--
6/2/2012 5:00	0.0090	--	6/2/2012 5:00	0.0093	--	6/2/2012 5:00	0.0078	--
6/2/2012 6:00	0.0086	--	6/2/2012 6:00	0.0087	--	6/2/2012 6:00	0.0084	--
6/2/2012 7:00	0.0086	--	6/2/2012 7:00	0.0087	--	6/2/2012 7:00	0.0095	--
6/2/2012 8:00	0.0086	--	6/2/2012 8:00	0.0087	--	6/2/2012 8:00	0.0092	--
6/2/2012 9:00	0.0087	--	6/2/2012 9:00	0.0088	--	6/2/2012 9:00	0.0091	--
6/2/2012 10:00	0.0087	--	6/2/2012 10:00	0.0089	--	6/2/2012 10:00	0.0099	--
6/2/2012 11:00	0.0087	--	6/2/2012 11:00	0.0089	--	6/2/2012 11:00	0.0094	--
6/2/2012 12:00	0.0086	--	6/2/2012 12:00	0.0087	--	6/2/2012 12:00	0.0083	--
6/2/2012 13:00	0.0086	--	6/2/2012 13:00	0.0087	--	6/2/2012 13:00	0.0083	--
6/2/2012 14:00	0.0086	--	6/2/2012 14:00	0.0088	--	6/2/2012 14:00	0.0091	--
6/2/2012 15:00	0.0085	--	6/2/2012 15:00	0.0086	--	6/2/2012 15:00	0.0086	--
6/2/2012 16:00	0.0086	--	6/2/2012 16:00	0.0087	--	6/2/2012 16:00	0.0095	--
6/2/2012 17:00	0.0085	--	6/2/2012 17:00	0.0086	--	6/2/2012 17:00	0.0085	--
6/2/2012 18:00	0.0085	--	6/2/2012 18:00	0.0086	--	6/2/2012 18:00	0.0087	--
6/2/2012 19:00	0.0086	--	6/2/2012 19:00	0.0086	--	6/2/2012 19:00	0.0085	--
6/2/2012 20:00	0.0085	--	6/2/2012 20:00	0.0086	--	6/2/2012 20:00	0.0087	--
6/2/2012 21:00	0.0086	--	6/2/2012 21:00	0.0088	--	6/2/2012 21:00	0.0075	--
6/2/2012 22:00	0.0086	--	6/2/2012 22:00	0.0088	--	6/2/2012 22:00	0.0082	--
6/2/2012 23:00	0.0086	0.0086	6/2/2012 23:00	0.0087	0.0100	6/2/2012 23:00	0.0084	0.0118
6/3/2012 0:00	0.0086	--	6/3/2012 0:00	0.0087	--	6/3/2012 0:00	0.0084	--
6/3/2012 1:00	0.0086	--	6/3/2012 1:00	0.0087	--	6/3/2012 1:00	0.0079	--
6/3/2012 2:00	0.0086	--	6/3/2012 2:00	0.0086	--	6/3/2012 2:00	0.0079	--
6/3/2012 3:00	0.0086	--	6/3/2012 3:00	0.0087	--	6/3/2012 3:00	0.0085	--
6/3/2012 4:00	0.0086	--	6/3/2012 4:00	0.0087	--	6/3/2012 4:00	0.0088	--
6/3/2012 5:00	0.0091	--	6/3/2012 5:00	0.0089	--	6/3/2012 5:00	0.0083	--
6/3/2012 6:00	0.0089	--	6/3/2012 6:00	0.0103	--	6/3/2012 6:00	0.0126	--
6/3/2012 7:00	0.0086	--	6/3/2012 7:00	0.0087	--	6/3/2012 7:00	0.0069	--
6/3/2012 8:00	0.0087	--	6/3/2012 8:00	0.0090	--	6/3/2012 8:00	0.0084	--
6/3/2012 9:00	0.0087	--	6/3/2012 9:00	0.0089	--	6/3/2012 9:00	0.0078	--
6/3/2012 10:00	0.0086	--	6/3/2012 10:00	0.0090	--	6/3/2012 10:00	0.0069	--
6/3/2012 11:00	0.0086	--	6/3/2012 11:00	0.0089	--	6/3/2012 11:00	0.0066	--
6/3/2012 12:00	0.0087	--	6/3/2012 12:00	0.0089	--	6/3/2012 12:00	0.0068	--
6/3/2012 13:00	0.0086	--	6/3/2012 13:00	0.0089	--	6/3/2012 13:00	0.0064	--
6/3/2012 14:00	0.0087	--	6/3/2012 14:00	0.0089	--	6/3/2012 14:00	0.0055	--
6/3/2012 15:00	0.0085	--	6/3/2012 15:00	0.0087	--	6/3/2012 15:00	0.0051	--
6/3/2012 16:00	0.0082	--	6/3/2012 16:00	0.0081	--	6/3/2012 16:00	0.0032	--
6/3/2012 17:00	0.0086	--	6/3/2012 17:00	0.0087	--	6/3/2012 17:00	0.0024	--

Package Boiler No. 1 EPN 81BF01			Package Boiler No. 2 EPN 50BF02			Package Boiler No. 3 EPN 50BF03		
Date	NO_X (lb/MMBtu)	NO_X (lb/MMBtu) 30-day Rolling Average	Date	NO_X (lb/MMBtu)	NO_X (lb/MMBtu) 30-day Rolling Average	Date	NO_X (lb/MMBtu)	NO_X (lb/MMBtu) 30-day Rolling Average
6/3/2012 18:00	0.0084	--	6/3/2012 18:00	0.0087	--	6/3/2012 18:00	0.0022	--
6/3/2012 19:00	0.0084	--	6/3/2012 19:00	0.0086	--	6/3/2012 19:00	0.0020	--
6/3/2012 20:00	0.0085	--	6/3/2012 20:00	0.0087	--	6/3/2012 20:00	0.0019	--
6/3/2012 21:00	0.0086	--	6/3/2012 21:00	0.0087	--	6/3/2012 21:00	0.0019	--
6/3/2012 22:00	0.0086	--	6/3/2012 22:00	0.0088	--	6/3/2012 22:00	0.0019	--
6/3/2012 23:00	0.0086	0.0086	6/3/2012 23:00	0.0088	0.0100	6/3/2012 23:00	0.0019	0.0119
6/4/2012 0:00	0.0085	--	6/4/2012 0:00	0.0087	--	6/4/2012 0:00	0.0019	--
6/4/2012 1:00	0.0086	--	6/4/2012 1:00	0.0088	--	6/4/2012 1:00	0.0019	--
6/4/2012 2:00	0.0086	--	6/4/2012 2:00	0.0088	--	6/4/2012 2:00	0.0019	--
6/4/2012 3:00	0.0085	--	6/4/2012 3:00	0.0088	--	6/4/2012 3:00	0.0019	--
6/4/2012 4:00	0.0086	--	6/4/2012 4:00	0.0088	--	6/4/2012 4:00	0.0019	--
6/4/2012 5:00	0.0087	--	6/4/2012 5:00	0.0089	--	6/4/2012 5:00	0.0022	--
6/4/2012 6:00	0.0086	--	6/4/2012 6:00	0.0080	--	6/4/2012 6:00	0.0033	--
6/4/2012 7:00	0.0087	--	6/4/2012 7:00	0.0087	--	6/4/2012 7:00	0.0066	--
6/4/2012 8:00	0.0087	--	6/4/2012 8:00	0.0090	--	6/4/2012 8:00	0.0050	--
6/4/2012 9:00	0.0087	--	6/4/2012 9:00	0.0088	--	6/4/2012 9:00	0.0052	--
6/4/2012 10:00	0.0087	--	6/4/2012 10:00	0.0089	--	6/4/2012 10:00	0.0071	--
6/4/2012 11:00	0.0086	--	6/4/2012 11:00	0.0088	--	6/4/2012 11:00	0.0085	--
6/4/2012 12:00	0.0087	--	6/4/2012 12:00	0.0106	--	6/4/2012 12:00	0.0079	--
6/4/2012 13:00	0.0086	--	6/4/2012 13:00	0.0206	--	6/4/2012 13:00	0.0101	--
6/4/2012 14:00	0.0083	--	6/4/2012 14:00	0.0076	--	6/4/2012 14:00	0.0074	--
6/4/2012 15:00	0.0085	--	6/4/2012 15:00	0.0085	--	6/4/2012 15:00	0.0076	--
6/4/2012 16:00	0.0086	--	6/4/2012 16:00	0.0086	--	6/4/2012 16:00	0.0078	--
6/4/2012 17:00	0.0086	--	6/4/2012 17:00	0.0087	--	6/4/2012 17:00	0.0077	--
6/4/2012 18:00	0.0085	--	6/4/2012 18:00	0.0086	--	6/4/2012 18:00	0.0075	--
6/4/2012 19:00	0.0085	--	6/4/2012 19:00	0.0087	--	6/4/2012 19:00	0.0071	--
6/4/2012 20:00	0.0085	--	6/4/2012 20:00	0.0086	--	6/4/2012 20:00	0.0076	--
6/4/2012 21:00	0.0085	--	6/4/2012 21:00	0.0087	--	6/4/2012 21:00	0.0086	--
6/4/2012 22:00	0.0086	--	6/4/2012 22:00	0.0087	--	6/4/2012 22:00	0.0084	--
6/4/2012 23:00	0.0085	0.0085	6/4/2012 23:00	0.0086	0.0100	6/4/2012 23:00	0.0090	0.0114
6/5/2012 0:00	0.0085	--	6/5/2012 0:00	0.0087	--	6/5/2012 0:00	0.0080	--
6/5/2012 1:00	0.0086	--	6/5/2012 1:00	0.0087	--	6/5/2012 1:00	0.0083	--
6/5/2012 2:00	0.0095	--	6/5/2012 2:00	0.0095	--	6/5/2012 2:00	0.0116	--
6/5/2012 3:00	0.0079	--	6/5/2012 3:00	0.0083	--	6/5/2012 3:00	0.0091	--
6/5/2012 4:00	0.0084	--	6/5/2012 4:00	0.0085	--	6/5/2012 4:00	0.0082	--
6/5/2012 5:00	0.0086	--	6/5/2012 5:00	0.0081	--	6/5/2012 5:00	0.0083	--
6/5/2012 6:00	0.0086	--	6/5/2012 6:00	0.0087	--	6/5/2012 6:00	0.0079	--
6/5/2012 7:00	0.0087	--	6/5/2012 7:00	0.0088	--	6/5/2012 7:00	0.0092	--
6/5/2012 8:00	0.0087	--	6/5/2012 8:00	0.0089	--	6/5/2012 8:00	0.0105	--
6/5/2012 9:00	0.0088	--	6/5/2012 9:00	0.0090	--	6/5/2012 9:00	0.0100	--
6/5/2012 10:00	0.0088	--	6/5/2012 10:00	0.0091	--	6/5/2012 10:00	0.0097	--

Package Boiler No. 1 EPN 81BF01			Package Boiler No. 2 EPN 50BF02			Package Boiler No. 3 EPN 50BF03		
Date	NO_X (lb/MMBtu)	NO_X (lb/MMBtu) 30-day Rolling Average	Date	NO_X (lb/MMBtu)	NO_X (lb/MMBtu) 30-day Rolling Average	Date	NO_X (lb/MMBtu)	NO_X (lb/MMBtu) 30-day Rolling Average
6/5/2012 11:00	0.0087	--	6/5/2012 11:00	0.0087	--	6/5/2012 11:00	0.0101	--
6/5/2012 12:00	0.0087	--	6/5/2012 12:00	0.0089	--	6/5/2012 12:00	0.0086	--
6/5/2012 13:00	0.0086	--	6/5/2012 13:00	0.0089	--	6/5/2012 13:00	0.0072	--
6/5/2012 14:00	0.0084	--	6/5/2012 14:00	0.0086	--	6/5/2012 14:00	0.0084	--
6/5/2012 15:00	0.0085	--	6/5/2012 15:00	0.0085	--	6/5/2012 15:00	0.0068	--
6/5/2012 16:00	0.0086	--	6/5/2012 16:00	0.0087	--	6/5/2012 16:00	0.0074	--
6/5/2012 17:00	0.0085	--	6/5/2012 17:00	0.0084	--	6/5/2012 17:00	0.0059	--
6/5/2012 18:00	0.0085	--	6/5/2012 18:00	0.0087	--	6/5/2012 18:00	0.0074	--
6/5/2012 19:00	0.0085	--	6/5/2012 19:00	0.0086	--	6/5/2012 19:00	0.0083	--
6/5/2012 20:00	0.0086	--	6/5/2012 20:00	0.0087	--	6/5/2012 20:00	0.0085	--
6/5/2012 21:00	0.0085	--	6/5/2012 21:00	0.0086	--	6/5/2012 21:00	0.0073	--
6/5/2012 22:00	0.0078	--	6/5/2012 22:00	0.0060	--	6/5/2012 22:00	0.0078	--
6/5/2012 23:00	0.0086	0.0085	6/5/2012 23:00	0.0084	0.0091	6/5/2012 23:00	0.0081	0.0094
6/6/2012 0:00	0.0086	--	6/6/2012 0:00	0.0087	--	6/6/2012 0:00	0.0081	--
6/6/2012 1:00	0.0086	--	6/6/2012 1:00	0.0087	--	6/6/2012 1:00	0.0085	--
6/6/2012 2:00	0.0086	--	6/6/2012 2:00	0.0087	--	6/6/2012 2:00	0.0086	--
6/6/2012 3:00	0.0086	--	6/6/2012 3:00	0.0087	--	6/6/2012 3:00	0.0084	--
6/6/2012 4:00	0.0086	--	6/6/2012 4:00	0.0088	--	6/6/2012 4:00	0.0083	--
6/6/2012 5:00	0.0080	--	6/6/2012 5:00	0.0089	--	6/6/2012 5:00	0.0091	--
6/6/2012 6:00	0.0086	--	6/6/2012 6:00	0.0088	--	6/6/2012 6:00	0.0087	--
6/6/2012 7:00	0.0087	--	6/6/2012 7:00	0.0084	--	6/6/2012 7:00	0.0113	--
6/6/2012 8:00	0.0088	--	6/6/2012 8:00	0.0087	--	6/6/2012 8:00	0.0110	--
6/6/2012 9:00	0.0086	--	6/6/2012 9:00	0.0088	--	6/6/2012 9:00	0.0096	--
6/6/2012 10:00	0.0086	--	6/6/2012 10:00	0.0087	--	6/6/2012 10:00	0.0093	--
6/6/2012 11:00	0.0087	--	6/6/2012 11:00	0.0088	--	6/6/2012 11:00	0.0093	--
6/6/2012 12:00	0.0087	--	6/6/2012 12:00	0.0089	--	6/6/2012 12:00	0.0101	--
6/6/2012 13:00	0.0089	--	6/6/2012 13:00	0.0092	--	6/6/2012 13:00	0.0090	--
6/6/2012 14:00	0.0087	--	6/6/2012 14:00	0.0090	--	6/6/2012 14:00	0.0084	--
6/6/2012 15:00	0.0081	--	6/6/2012 15:00	0.0081	--	6/6/2012 15:00	0.0069	--
6/6/2012 16:00	0.0086	--	6/6/2012 16:00	0.0085	--	6/6/2012 16:00	0.0071	--
6/6/2012 17:00	0.0086	--	6/6/2012 17:00	0.0088	--	6/6/2012 17:00	0.0080	--
6/6/2012 18:00	0.0085	--	6/6/2012 18:00	0.0086	--	6/6/2012 18:00	0.0087	--
6/6/2012 19:00	0.0086	--	6/6/2012 19:00	0.0087	--	6/6/2012 19:00	0.0055	--
6/6/2012 20:00	0.0086	--	6/6/2012 20:00	0.0088	--	6/6/2012 20:00	0.0050	--
6/6/2012 21:00	0.0085	--	6/6/2012 21:00	0.0086	--	6/6/2012 21:00	0.0068	--
6/6/2012 22:00	0.0085	--	6/6/2012 22:00	0.0086	--	6/6/2012 22:00	0.0074	--
6/6/2012 23:00	0.0088	0.0085	6/6/2012 23:00	0.0090	0.0089	6/6/2012 23:00	0.0095	0.0084
6/7/2012 0:00	0.0086	--	6/7/2012 0:00	0.0088	--	6/7/2012 0:00	0.0093	--
6/7/2012 1:00	0.0086	--	6/7/2012 1:00	0.0087	--	6/7/2012 1:00	0.0084	--
6/7/2012 2:00	0.0086	--	6/7/2012 2:00	0.0087	--	6/7/2012 2:00	0.0078	--
6/7/2012 3:00	0.0086	--	6/7/2012 3:00	0.0087	--	6/7/2012 3:00	0.0077	--

Package Boiler No. 1 EPN 81BF01			Package Boiler No. 2 EPN 50BF02			Package Boiler No. 3 EPN 50BF03		
Date	NO_X (lb/MMBtu)	NO_X (lb/MMBtu) 30-day Rolling Average	Date	NO_X (lb/MMBtu)	NO_X (lb/MMBtu) 30-day Rolling Average	Date	NO_X (lb/MMBtu)	NO_X (lb/MMBtu) 30-day Rolling Average
6/7/2012 4:00	0.0086	--	6/7/2012 4:00	0.0087	--	6/7/2012 4:00	0.0080	--
6/7/2012 5:00	0.0099	--	6/7/2012 5:00	0.0090	--	6/7/2012 5:00	0.0096	--
6/7/2012 6:00	0.0087	--	6/7/2012 6:00	0.0088	--	6/7/2012 6:00	0.0085	--
6/7/2012 7:00	0.0087	--	6/7/2012 7:00	0.0088	--	6/7/2012 7:00	0.0095	--
6/7/2012 8:00	0.0086	--	6/7/2012 8:00	0.0083	--	6/7/2012 8:00	0.0103	--
6/7/2012 9:00	0.0086	--	6/7/2012 9:00	0.0089	--	6/7/2012 9:00	0.0090	--
6/7/2012 10:00	0.0086	--	6/7/2012 10:00	0.0087	--	6/7/2012 10:00	0.0093	--
6/7/2012 11:00	0.0352	--	6/7/2012 11:00	0.0088	--	6/7/2012 11:00	0.0093	--
6/7/2012 12:00	0.0082	--	6/7/2012 12:00	0.0087	--	6/7/2012 12:00	0.0086	--
6/7/2012 13:00	0.0082	--	6/7/2012 13:00	0.0087	--	6/7/2012 13:00	0.0089	--
6/7/2012 14:00	0.0083	--	6/7/2012 14:00	0.0086	--	6/7/2012 14:00	0.0096	--
6/7/2012 15:00	0.0082	--	6/7/2012 15:00	0.0087	--	6/7/2012 15:00	0.0086	--
6/7/2012 16:00	0.0082	--	6/7/2012 16:00	0.0085	--	6/7/2012 16:00	0.0070	--
6/7/2012 17:00	0.0081	--	6/7/2012 17:00	0.0085	--	6/7/2012 17:00	0.0080	--
6/7/2012 18:00	0.0083	--	6/7/2012 18:00	0.0087	--	6/7/2012 18:00	0.0076	--
6/7/2012 19:00	0.0083	--	6/7/2012 19:00	0.0087	--	6/7/2012 19:00	0.0077	--
6/7/2012 20:00	0.0083	--	6/7/2012 20:00	0.0087	--	6/7/2012 20:00	0.0083	--
6/7/2012 21:00	0.0082	--	6/7/2012 21:00	0.0087	--	6/7/2012 21:00	0.0082	--
6/7/2012 22:00	0.0080	--	6/7/2012 22:00	0.0084	--	6/7/2012 22:00	0.0075	--
6/7/2012 23:00	0.0082	0.0086	6/7/2012 23:00	0.0086	0.0087	6/7/2012 23:00	0.0059	0.0083
6/8/2012 0:00	0.0083	--	6/8/2012 0:00	0.0086	--	6/8/2012 0:00	0.0064	--
6/8/2012 1:00	0.0082	--	6/8/2012 1:00	0.0086	--	6/8/2012 1:00	0.0075	--
6/8/2012 2:00	0.0082	--	6/8/2012 2:00	0.0087	--	6/8/2012 2:00	0.0078	--
6/8/2012 3:00	0.0084	--	6/8/2012 3:00	0.0089	--	6/8/2012 3:00	0.0092	--
6/8/2012 4:00	0.0082	--	6/8/2012 4:00	0.0087	--	6/8/2012 4:00	0.0048	--
6/8/2012 5:00	0.0085	--	6/8/2012 5:00	0.0089	--	6/8/2012 5:00	0.0061	--
6/8/2012 6:00	0.0083	--	6/8/2012 6:00	0.0087	--	6/8/2012 6:00	0.0080	--
6/8/2012 7:00	0.0084	--	6/8/2012 7:00	0.0088	--	6/8/2012 7:00	0.0078	--
6/8/2012 8:00	0.0086	--	6/8/2012 8:00	0.0082	--	6/8/2012 8:00	0.0064	--
6/8/2012 9:00	0.0082	--	6/8/2012 9:00	0.0088	--	6/8/2012 9:00	0.0051	--
6/8/2012 10:00	0.0082	--	6/8/2012 10:00	0.0087	--	6/8/2012 10:00	0.0058	--
6/8/2012 11:00	0.0082	--	6/8/2012 11:00	0.0087	--	6/8/2012 11:00	0.0072	--
6/8/2012 12:00	0.0082	--	6/8/2012 12:00	0.0087	--	6/8/2012 12:00	0.0074	--
6/8/2012 13:00	0.0082	--	6/8/2012 13:00	0.0084	--	6/8/2012 13:00	0.0078	--
6/8/2012 14:00	0.0082	--	6/8/2012 14:00	0.0084	--	6/8/2012 14:00	0.0093	--
6/8/2012 15:00	0.0084	--	6/8/2012 15:00	0.0092	--	6/8/2012 15:00	0.0123	--
6/8/2012 16:00	0.0081	--	6/8/2012 16:00	0.0084	--	6/8/2012 16:00	0.0080	--
6/8/2012 17:00	0.0081	--	6/8/2012 17:00	0.0085	--	6/8/2012 17:00	0.0035	--
6/8/2012 18:00	0.0082	--	6/8/2012 18:00	0.0086	--	6/8/2012 18:00	0.0071	--
6/8/2012 19:00	0.0081	--	6/8/2012 19:00	0.0085	--	6/8/2012 19:00	0.0079	--
6/8/2012 20:00	0.0083	--	6/8/2012 20:00	0.0087	--	6/8/2012 20:00	0.0070	--

Package Boiler No. 1 EPN 81BF01			Package Boiler No. 2 EPN 50BF02			Package Boiler No. 3 EPN 50BF03		
Date	NO_X (lb/MMBtu)	NO_X (lb/MMBtu) 30-day Rolling Average	Date	NO_X (lb/MMBtu)	NO_X (lb/MMBtu) 30-day Rolling Average	Date	NO_X (lb/MMBtu)	NO_X (lb/MMBtu) 30-day Rolling Average
6/8/2012 21:00	0.0083	--	6/8/2012 21:00	0.0087	--	6/8/2012 21:00	0.0076	--
6/8/2012 22:00	0.0082	--	6/8/2012 22:00	0.0096	--	6/8/2012 22:00	0.0046	--
6/8/2012 23:00	0.0081	0.0086	6/8/2012 23:00	0.0087	0.0086	6/8/2012 23:00	0.0065	0.0083
6/9/2012 0:00	0.0085	--	6/9/2012 0:00	0.0084	--	6/9/2012 0:00	0.0095	--
6/9/2012 1:00	0.0082	--	6/9/2012 1:00	0.0082	--	6/9/2012 1:00	0.0085	--
6/9/2012 2:00	0.0082	--	6/9/2012 2:00	0.0084	--	6/9/2012 2:00	0.0117	--
6/9/2012 3:00	0.0083	--	6/9/2012 3:00	0.0086	--	6/9/2012 3:00	0.0092	--
6/9/2012 4:00	0.0083	--	6/9/2012 4:00	0.0087	--	6/9/2012 4:00	0.0070	--
6/9/2012 5:00	0.0059	--	6/9/2012 5:00	0.0064	--	6/9/2012 5:00	0.0050	--
6/9/2012 6:00	0.0082	--	6/9/2012 6:00	0.0085	--	6/9/2012 6:00	0.0070	--
6/9/2012 7:00	0.0083	--	6/9/2012 7:00	0.0087	--	6/9/2012 7:00	0.0078	--
6/9/2012 8:00	0.0082	--	6/9/2012 8:00	0.0087	--	6/9/2012 8:00	0.0082	--
6/9/2012 9:00	0.0083	--	6/9/2012 9:00	0.0087	--	6/9/2012 9:00	0.0088	--
6/9/2012 10:00	0.0083	--	6/9/2012 10:00	0.0088	--	6/9/2012 10:00	0.0092	--
6/9/2012 11:00	0.0084	--	6/9/2012 11:00	0.0088	--	6/9/2012 11:00	0.0084	--
6/9/2012 12:00	0.0083	--	6/9/2012 12:00	0.0087	--	6/9/2012 12:00	0.0083	--
6/9/2012 13:00	0.0084	--	6/9/2012 13:00	0.0088	--	6/9/2012 13:00	0.0069	--
6/9/2012 14:00	0.0082	--	6/9/2012 14:00	0.0086	--	6/9/2012 14:00	0.0079	--
6/9/2012 15:00	0.0082	--	6/9/2012 15:00	0.0087	--	6/9/2012 15:00	0.0075	--
6/9/2012 16:00	0.0083	--	6/9/2012 16:00	0.0087	--	6/9/2012 16:00	0.0075	--
6/9/2012 17:00	0.0082	--	6/9/2012 17:00	0.0087	--	6/9/2012 17:00	0.0081	--
6/9/2012 18:00	0.0083	--	6/9/2012 18:00	0.0087	--	6/9/2012 18:00	0.0085	--
6/9/2012 19:00	0.0081	--	6/9/2012 19:00	0.0084	--	6/9/2012 19:00	0.0080	--
6/9/2012 20:00	0.0082	--	6/9/2012 20:00	0.0087	--	6/9/2012 20:00	0.0069	--
6/9/2012 21:00	0.0083	--	6/9/2012 21:00	0.0087	--	6/9/2012 21:00	0.0082	--
6/9/2012 22:00	0.0083	--	6/9/2012 22:00	0.0087	--	6/9/2012 22:00	0.0082	--
6/9/2012 23:00	0.0083	0.0086	6/9/2012 23:00	0.0087	0.0086	6/9/2012 23:00	0.0078	0.0082
6/10/2012 0:00	0.0082	--	6/10/2012 0:00	0.0087	--	6/10/2012 0:00	0.0090	--
6/10/2012 1:00	0.0083	--	6/10/2012 1:00	0.0087	--	6/10/2012 1:00	0.0081	--
6/10/2012 2:00	0.0082	--	6/10/2012 2:00	0.0088	--	6/10/2012 2:00	0.0077	--
6/10/2012 3:00	0.0083	--	6/10/2012 3:00	0.0087	--	6/10/2012 3:00	0.0084	--
6/10/2012 4:00	0.0083	--	6/10/2012 4:00	0.0087	--	6/10/2012 4:00	0.0087	--
6/10/2012 5:00	0.0091	--	6/10/2012 5:00	0.0092	--	6/10/2012 5:00	0.0090	--
6/10/2012 6:00	0.0083	--	6/10/2012 6:00	0.0087	--	6/10/2012 6:00	0.0077	--
6/10/2012 7:00	0.0083	--	6/10/2012 7:00	0.0088	--	6/10/2012 7:00	0.0087	--
6/10/2012 8:00	0.0083	--	6/10/2012 8:00	0.0088	--	6/10/2012 8:00	0.0093	--
6/10/2012 9:00	0.0083	--	6/10/2012 9:00	0.0088	--	6/10/2012 9:00	0.0089	--
6/10/2012 10:00	0.0083	--	6/10/2012 10:00	0.0088	--	6/10/2012 10:00	0.0081	--
6/10/2012 11:00	0.0083	--	6/10/2012 11:00	0.0087	--	6/10/2012 11:00	0.0090	--
6/10/2012 12:00	0.0083	--	6/10/2012 12:00	0.0087	--	6/10/2012 12:00	0.0078	--
6/10/2012 13:00	0.0083	--	6/10/2012 13:00	0.0088	--	6/10/2012 13:00	0.0055	--

Package Boiler No. 1 EPN 81BF01			Package Boiler No. 2 EPN 50BF02			Package Boiler No. 3 EPN 50BF03		
Date	NO_X (lb/MMBtu)	NO_X (lb/MMBtu) 30-day Rolling Average	Date	NO_X (lb/MMBtu)	NO_X (lb/MMBtu) 30-day Rolling Average	Date	NO_X (lb/MMBtu)	NO_X (lb/MMBtu) 30-day Rolling Average
6/10/2012 14:00	0.0084	--	6/10/2012 14:00	0.0087	--	6/10/2012 14:00	0.0079	--
6/10/2012 15:00	0.0079	--	6/10/2012 15:00	0.0080	--	6/10/2012 15:00	0.0074	--
6/10/2012 16:00	0.0083	--	6/10/2012 16:00	0.0084	--	6/10/2012 16:00	0.0121	--
6/10/2012 17:00	0.0082	--	6/10/2012 17:00	0.0086	--	6/10/2012 17:00	0.0093	--
6/10/2012 18:00	0.0082	--	6/10/2012 18:00	0.0083	--	6/10/2012 18:00	0.0030	--
6/10/2012 19:00	0.0068	--	6/10/2012 19:00	0.0086	--	6/10/2012 19:00	0.0075	--
6/10/2012 20:00	0.0071	--	6/10/2012 20:00	0.0083	--	6/10/2012 20:00	0.0068	--
6/10/2012 21:00	0.0082	--	6/10/2012 21:00	0.0083	--	6/10/2012 21:00	0.0059	--
6/10/2012 22:00	0.0037	--	6/10/2012 22:00	0.0086	--	6/10/2012 22:00	0.0091	--
6/10/2012 23:00	0.0012	0.0085	6/10/2012 23:00	0.0086	0.0086	6/10/2012 23:00	0.0083	0.0082
6/11/2012 0:00	0.0012	--	6/11/2012 0:00	0.0087	--	6/11/2012 0:00	0.0093	--
6/11/2012 1:00	0.0028	--	6/11/2012 1:00	0.0089	--	6/11/2012 1:00	0.0086	--
6/11/2012 2:00	0.0062	--	6/11/2012 2:00	0.0091	--	6/11/2012 2:00	0.0088	--
6/11/2012 3:00	0.0076	--	6/11/2012 3:00	0.0090	--	6/11/2012 3:00	0.0071	--
6/11/2012 4:00	0.0075	--	6/11/2012 4:00	0.0085	--	6/11/2012 4:00	0.0072	--
6/11/2012 5:00	0.0095	--	6/11/2012 5:00	0.0091	--	6/11/2012 5:00	0.0037	--
6/11/2012 6:00	0.0076	--	6/11/2012 6:00	0.0087	--	6/11/2012 6:00	0.0062	--
6/11/2012 7:00	0.0077	--	6/11/2012 7:00	0.0087	--	6/11/2012 7:00	0.0048	--
6/11/2012 8:00	0.0077	--	6/11/2012 8:00	0.0087	--	6/11/2012 8:00	0.0071	--
6/11/2012 9:00	0.0077	--	6/11/2012 9:00	0.0088	--	6/11/2012 9:00	0.0073	--
6/11/2012 10:00	0.0077	--	6/11/2012 10:00	0.0088	--	6/11/2012 10:00	0.0093	--
6/11/2012 11:00	0.0077	--	6/11/2012 11:00	0.0088	--	6/11/2012 11:00	0.0061	--
6/11/2012 12:00	0.0076	--	6/11/2012 12:00	0.0087	--	6/11/2012 12:00	0.0032	--
6/11/2012 13:00	0.0076	--	6/11/2012 13:00	0.0085	--	6/11/2012 13:00	0.0038	--
6/11/2012 14:00	0.0076	--	6/11/2012 14:00	0.0086	--	6/11/2012 14:00	0.0110	--
6/11/2012 15:00	0.0076	--	6/11/2012 15:00	0.0085	--	6/11/2012 15:00	0.0054	--
6/11/2012 16:00	0.0077	--	6/11/2012 16:00	0.0086	--	6/11/2012 16:00	0.0073	--
6/11/2012 17:00	0.0076	--	6/11/2012 17:00	0.0086	--	6/11/2012 17:00	0.0114	--
6/11/2012 18:00	0.0077	--	6/11/2012 18:00	0.0087	--	6/11/2012 18:00	0.0096	--
6/11/2012 19:00	0.0075	--	6/11/2012 19:00	0.0087	--	6/11/2012 19:00	0.0082	--
6/11/2012 20:00	0.0077	--	6/11/2012 20:00	0.0086	--	6/11/2012 20:00	0.0061	--
6/11/2012 21:00	0.0076	--	6/11/2012 21:00	0.0086	--	6/11/2012 21:00	0.0058	--
6/11/2012 22:00	0.0076	--	6/11/2012 22:00	0.0087	--	6/11/2012 22:00	0.0065	--
6/11/2012 23:00	0.0077	0.0085	6/11/2012 23:00	0.0087	0.0086	6/11/2012 23:00	0.0080	0.0081
6/12/2012 0:00	0.0076	--	6/12/2012 0:00	0.0088	--	6/12/2012 0:00	0.0114	--
6/12/2012 1:00	0.0077	--	6/12/2012 1:00	0.0088	--	6/12/2012 1:00	0.0106	--
6/12/2012 2:00	0.0079	--	6/12/2012 2:00	0.0095	--	6/12/2012 2:00	0.0072	--
6/12/2012 3:00	0.0076	--	6/12/2012 3:00	0.0087	--	6/12/2012 3:00	0.0087	--
6/12/2012 4:00	0.0075	--	6/12/2012 4:00	0.0086	--	6/12/2012 4:00	0.0070	--
6/12/2012 5:00	0.0065	--	6/12/2012 5:00	0.0091	--	6/12/2012 5:00	0.0120	--
6/12/2012 6:00	0.0077	--	6/12/2012 6:00	0.0088	--	6/12/2012 6:00	0.0068	--

Package Boiler No. 1 EPN 81BF01			Package Boiler No. 2 EPN 50BF02			Package Boiler No. 3 EPN 50BF03		
Date	NO_X (lb/MMBtu)	NO_X (lb/MMBtu) 30-day Rolling Average	Date	NO_X (lb/MMBtu)	NO_X (lb/MMBtu) 30-day Rolling Average	Date	NO_X (lb/MMBtu)	NO_X (lb/MMBtu) 30-day Rolling Average
6/12/2012 7:00	0.0077	--	6/12/2012 7:00	0.0088	--	6/12/2012 7:00	0.0067	--
6/12/2012 8:00	0.0078	--	6/12/2012 8:00	0.0089	--	6/12/2012 8:00	0.0036	--
6/12/2012 9:00	0.0077	--	6/12/2012 9:00	0.0089	--	6/12/2012 9:00	0.0033	--
6/12/2012 10:00	0.0077	--	6/12/2012 10:00	0.0089	--	6/12/2012 10:00	0.0033	--
6/12/2012 11:00	0.0077	--	6/12/2012 11:00	0.0088	--	6/12/2012 11:00	0.0032	--
6/12/2012 12:00	0.0079	--	6/12/2012 12:00	0.0089	--	6/12/2012 12:00	0.0033	--
6/12/2012 13:00	0.0075	--	6/12/2012 13:00	0.0086	--	6/12/2012 13:00	0.0030	--
6/12/2012 14:00	0.0076	--	6/12/2012 14:00	0.0087	--	6/12/2012 14:00	0.0032	--
6/12/2012 15:00	0.0077	--	6/12/2012 15:00	0.0087	--	6/12/2012 15:00	0.0032	--
6/12/2012 16:00	0.0075	--	6/12/2012 16:00	0.0087	--	6/12/2012 16:00	0.0033	--
6/12/2012 17:00	0.0076	--	6/12/2012 17:00	0.0085	--	6/12/2012 17:00	0.0024	--
6/12/2012 18:00	0.0077	--	6/12/2012 18:00	0.0085	--	6/12/2012 18:00	0.0026	--
6/12/2012 19:00	0.0077	--	6/12/2012 19:00	0.0088	--	6/12/2012 19:00	0.0027	--
6/12/2012 20:00	0.0077	--	6/12/2012 20:00	0.0088	--	6/12/2012 20:00	0.0030	--
6/12/2012 21:00	0.0076	--	6/12/2012 21:00	0.0086	--	6/12/2012 21:00	0.0033	--
6/12/2012 22:00	0.0078	--	6/12/2012 22:00	0.0087	--	6/12/2012 22:00	0.0040	--
6/12/2012 23:00	0.0076	0.0084	6/12/2012 23:00	0.0086	0.0085	6/12/2012 23:00	0.0034	0.0080
6/13/2012 0:00	0.0076	--	6/13/2012 0:00	0.0086	--	6/13/2012 0:00	0.0060	--
6/13/2012 1:00	0.0075	--	6/13/2012 1:00	0.0086	--	6/13/2012 1:00	0.0075	--
6/13/2012 2:00	0.0077	--	6/13/2012 2:00	0.0086	--	6/13/2012 2:00	0.0057	--
6/13/2012 3:00	0.0077	--	6/13/2012 3:00	0.0087	--	6/13/2012 3:00	0.0057	--
6/13/2012 4:00	0.0076	--	6/13/2012 4:00	0.0086	--	6/13/2012 4:00	0.0042	--
6/13/2012 5:00	0.0081	--	6/13/2012 5:00	0.0089	--	6/13/2012 5:00	0.0044	--
6/13/2012 6:00	0.0076	--	6/13/2012 6:00	0.0087	--	6/13/2012 6:00	0.0041	--
6/13/2012 7:00	0.0077	--	6/13/2012 7:00	0.0087	--	6/13/2012 7:00	0.0035	--
6/13/2012 8:00	0.0077	--	6/13/2012 8:00	0.0088	--	6/13/2012 8:00	0.0031	--
6/13/2012 9:00	0.0077	--	6/13/2012 9:00	0.0088	--	6/13/2012 9:00	0.0026	--
6/13/2012 10:00	0.0077	--	6/13/2012 10:00	0.0088	--	6/13/2012 10:00	0.0026	--
6/13/2012 11:00	0.0076	--	6/13/2012 11:00	0.0088	--	6/13/2012 11:00	0.0026	--
6/13/2012 12:00	0.0076	--	6/13/2012 12:00	0.0087	--	6/13/2012 12:00	0.0032	--
6/13/2012 13:00	0.0078	--	6/13/2012 13:00	0.0088	--	6/13/2012 13:00	0.0026	--
6/13/2012 14:00	0.0076	--	6/13/2012 14:00	0.0086	--	6/13/2012 14:00	0.0026	--
6/13/2012 15:00	0.0078	--	6/13/2012 15:00	0.0088	--	6/13/2012 15:00	0.0030	--
6/13/2012 16:00	0.0076	--	6/13/2012 16:00	0.0088	--	6/13/2012 16:00	0.0029	--
6/13/2012 17:00	0.0074	--	6/13/2012 17:00	0.0084	--	6/13/2012 17:00	0.0026	--
6/13/2012 18:00	0.0075	--	6/13/2012 18:00	0.0085	--	6/13/2012 18:00	0.0026	--
6/13/2012 19:00	0.0077	--	6/13/2012 19:00	0.0084	--	6/13/2012 19:00	0.0024	--
6/13/2012 20:00	0.0076	--	6/13/2012 20:00	0.0086	--	6/13/2012 20:00	0.0026	--
6/13/2012 21:00	0.0077	--	6/13/2012 21:00	0.0087	--	6/13/2012 21:00	0.0030	--
6/13/2012 22:00	0.0076	--	6/13/2012 22:00	0.0087	--	6/13/2012 22:00	0.0029	--
6/13/2012 23:00	0.0076	0.0086	6/13/2012 23:00	0.0086	0.0085	6/13/2012 23:00	0.0030	0.0078

Package Boiler No. 1 EPN 81BF01			Package Boiler No. 2 EPN 50BF02			Package Boiler No. 3 EPN 50BF03		
Date	NO_X (lb/MMBtu)	NO_X (lb/MMBtu) 30-day Rolling Average	Date	NO_X (lb/MMBtu)	NO_X (lb/MMBtu) 30-day Rolling Average	Date	NO_X (lb/MMBtu)	NO_X (lb/MMBtu) 30-day Rolling Average
6/14/2012 0:00	0.0077	--	6/14/2012 0:00	0.0087	--	6/14/2012 0:00	0.0029	--
6/14/2012 1:00	0.0077	--	6/14/2012 1:00	0.0087	--	6/14/2012 1:00	0.0026	--
6/14/2012 2:00	0.0077	--	6/14/2012 2:00	0.0087	--	6/14/2012 2:00	0.0027	--
6/14/2012 3:00	0.0077	--	6/14/2012 3:00	0.0087	--	6/14/2012 3:00	0.0026	--
6/14/2012 4:00	0.0077	--	6/14/2012 4:00	0.0087	--	6/14/2012 4:00	0.0027	--
6/14/2012 5:00	0.0079	--	6/14/2012 5:00	0.0088	--	6/14/2012 5:00	0.0030	--
6/14/2012 6:00	0.0077	--	6/14/2012 6:00	0.0088	--	6/14/2012 6:00	0.0034	--
6/14/2012 7:00	0.0077	--	6/14/2012 7:00	0.0087	--	6/14/2012 7:00	0.0039	--
6/14/2012 8:00	0.0078	--	6/14/2012 8:00	0.0089	--	6/14/2012 8:00	0.0031	--
6/14/2012 9:00	0.0077	--	6/14/2012 9:00	0.0088	--	6/14/2012 9:00	0.0028	--
6/14/2012 10:00	0.0077	--	6/14/2012 10:00	0.0088	--	6/14/2012 10:00	0.0026	--
6/14/2012 11:00	0.0076	--	6/14/2012 11:00	0.0087	--	6/14/2012 11:00	0.0029	--
6/14/2012 12:00	0.0076	--	6/14/2012 12:00	0.0086	--	6/14/2012 12:00	0.0035	--
6/14/2012 13:00	0.0076	--	6/14/2012 13:00	0.0086	--	6/14/2012 13:00	0.0033	--
6/14/2012 14:00	0.0076	--	6/14/2012 14:00	0.0086	--	6/14/2012 14:00	0.0031	--
6/14/2012 15:00	0.0076	--	6/14/2012 15:00	0.0087	--	6/14/2012 15:00	0.0029	--
6/14/2012 16:00	0.0077	--	6/14/2012 16:00	0.0087	--	6/14/2012 16:00	0.0034	--
6/14/2012 17:00	0.0076	--	6/14/2012 17:00	0.0087	--	6/14/2012 17:00	0.0040	--
6/14/2012 18:00	0.0077	--	6/14/2012 18:00	0.0087	--	6/14/2012 18:00	0.0033	--
6/14/2012 19:00	0.0076	--	6/14/2012 19:00	0.0086	--	6/14/2012 19:00	0.0036	--
6/14/2012 20:00	0.0076	--	6/14/2012 20:00	0.0086	--	6/14/2012 20:00	0.0032	--
6/14/2012 21:00	0.0076	--	6/14/2012 21:00	0.0086	--	6/14/2012 21:00	0.0034	--
6/14/2012 22:00	0.0077	--	6/14/2012 22:00	0.0087	--	6/14/2012 22:00	0.0032	--
6/14/2012 23:00	0.0077	0.0089	6/14/2012 23:00	0.0087	0.0084	6/14/2012 23:00	0.0031	0.0076
6/15/2012 0:00	0.0077	--	6/15/2012 0:00	0.0087	--	6/15/2012 0:00	0.0025	--
6/15/2012 1:00	0.0077	--	6/15/2012 1:00	0.0087	--	6/15/2012 1:00	0.0026	--
6/15/2012 2:00	0.0077	--	6/15/2012 2:00	0.0087	--	6/15/2012 2:00	0.0026	--
6/15/2012 3:00	0.0076	--	6/15/2012 3:00	0.0086	--	6/15/2012 3:00	0.0026	--
6/15/2012 4:00	0.0077	--	6/15/2012 4:00	0.0087	--	6/15/2012 4:00	0.0028	--
6/15/2012 5:00	0.0082	--	6/15/2012 5:00	0.0090	--	6/15/2012 5:00	0.0030	--
6/15/2012 6:00	0.0077	--	6/15/2012 6:00	0.0087	--	6/15/2012 6:00	0.0029	--
6/15/2012 7:00	0.0077	--	6/15/2012 7:00	0.0088	--	6/15/2012 7:00	0.0030	--
6/15/2012 8:00	0.0077	--	6/15/2012 8:00	0.0088	--	6/15/2012 8:00	0.0028	--
6/15/2012 9:00	0.0078	--	6/15/2012 9:00	0.0088	--	6/15/2012 9:00	0.0026	--
6/15/2012 10:00	0.0076	--	6/15/2012 10:00	0.0087	--	6/15/2012 10:00	0.0037	--
6/15/2012 11:00	0.0078	--	6/15/2012 11:00	0.0087	--	6/15/2012 11:00	0.0034	--
6/15/2012 12:00	0.0079	--	6/15/2012 12:00	0.0090	--	6/15/2012 12:00	0.0047	--
6/15/2012 13:00	0.0076	--	6/15/2012 13:00	0.0086	--	6/15/2012 13:00	0.0065	--
6/15/2012 14:00	0.0089	--	6/15/2012 14:00	0.0096	--	6/15/2012 14:00	0.0061	--
6/15/2012 15:00	0.0058	--	6/15/2012 15:00	0.0064	--	6/15/2012 15:00	0.0034	--
6/15/2012 16:00	0.0072	--	6/15/2012 16:00	0.0078	--	6/15/2012 16:00	0.0026	--

Package Boiler No. 1 EPN 81BF01			Package Boiler No. 2 EPN 50BF02			Package Boiler No. 3 EPN 50BF03		
Date	NO_X (lb/MMBtu)	NO_X (lb/MMBtu) 30-day Rolling Average	Date	NO_X (lb/MMBtu)	NO_X (lb/MMBtu) 30-day Rolling Average	Date	NO_X (lb/MMBtu)	NO_X (lb/MMBtu) 30-day Rolling Average
6/15/2012 17:00	0.0078	--	6/15/2012 17:00	0.0088	--	6/15/2012 17:00	0.0027	--
6/15/2012 18:00	0.0079	--	6/15/2012 18:00	0.0089	--	6/15/2012 18:00	0.0035	--
6/15/2012 19:00	0.0074	--	6/15/2012 19:00	0.0085	--	6/15/2012 19:00	0.0034	--
6/15/2012 20:00	0.0075	--	6/15/2012 20:00	0.0084	--	6/15/2012 20:00	0.0028	--
6/15/2012 21:00	0.0075	--	6/15/2012 21:00	0.0084	--	6/15/2012 21:00	0.0029	--
6/15/2012 22:00	0.0076	--	6/15/2012 22:00	0.0086	--	6/15/2012 22:00	0.0031	--
6/15/2012 23:00	0.0076	0.0090	6/15/2012 23:00	0.0085	0.0087	6/15/2012 23:00	0.0030	0.0075
6/16/2012 0:00	0.0076	--	6/16/2012 0:00	0.0086	--	6/16/2012 0:00	0.0027	--
6/16/2012 1:00	0.0076	--	6/16/2012 1:00	0.0086	--	6/16/2012 1:00	0.0028	--
6/16/2012 2:00	0.0077	--	6/16/2012 2:00	0.0088	--	6/16/2012 2:00	0.0044	--
6/16/2012 3:00	0.0077	--	6/16/2012 3:00	0.0086	--	6/16/2012 3:00	0.0035	--
6/16/2012 4:00	0.0076	--	6/16/2012 4:00	0.0086	--	6/16/2012 4:00	0.0031	--
6/16/2012 5:00	0.0080	--	6/16/2012 5:00	0.0088	--	6/16/2012 5:00	0.0072	--
6/16/2012 6:00	0.0077	--	6/16/2012 6:00	0.0088	--	6/16/2012 6:00	0.0096	--
6/16/2012 7:00	0.0076	--	6/16/2012 7:00	0.0087	--	6/16/2012 7:00	0.0062	--
6/16/2012 8:00	0.0077	--	6/16/2012 8:00	0.0087	--	6/16/2012 8:00	0.0056	--
6/16/2012 9:00	0.0079	--	6/16/2012 9:00	0.0089	--	6/16/2012 9:00	0.0069	--
6/16/2012 10:00	0.0077	--	6/16/2012 10:00	0.0088	--	6/16/2012 10:00	0.0070	--
6/16/2012 11:00	0.0077	--	6/16/2012 11:00	0.0088	--	6/16/2012 11:00	0.0048	--
6/16/2012 12:00	0.0074	--	6/16/2012 12:00	0.0084	--	6/16/2012 12:00	0.0041	--
6/16/2012 13:00	0.0077	--	6/16/2012 13:00	0.0087	--	6/16/2012 13:00	0.0046	--
6/16/2012 14:00	0.0077	--	6/16/2012 14:00	0.0087	--	6/16/2012 14:00	0.0051	--
6/16/2012 15:00	0.0077	--	6/16/2012 15:00	0.0088	--	6/16/2012 15:00	0.0054	--
6/16/2012 16:00	0.0077	--	6/16/2012 16:00	0.0087	--	6/16/2012 16:00	0.0049	--
6/16/2012 17:00	0.0076	--	6/16/2012 17:00	0.0087	--	6/16/2012 17:00	0.0056	--
6/16/2012 18:00	0.0076	--	6/16/2012 18:00	0.0086	--	6/16/2012 18:00	0.0064	--
6/16/2012 19:00	0.0076	--	6/16/2012 19:00	0.0086	--	6/16/2012 19:00	0.0069	--
6/16/2012 20:00	0.0075	--	6/16/2012 20:00	0.0085	--	6/16/2012 20:00	0.0068	--
6/16/2012 21:00	0.0077	--	6/16/2012 21:00	0.0088	--	6/16/2012 21:00	0.0070	--
6/16/2012 22:00	0.0077	--	6/16/2012 22:00	0.0088	--	6/16/2012 22:00	0.0070	--
6/16/2012 23:00	0.0076	0.0085	6/16/2012 23:00	0.0086	0.0090	6/16/2012 23:00	0.0058	0.0074
6/17/2012 0:00	0.0077	--	6/17/2012 0:00	0.0087	--	6/17/2012 0:00	0.0067	--
6/17/2012 1:00	0.0077	--	6/17/2012 1:00	0.0087	--	6/17/2012 1:00	0.0072	--
6/17/2012 2:00	0.0076	--	6/17/2012 2:00	0.0087	--	6/17/2012 2:00	0.0073	--
6/17/2012 3:00	0.0077	--	6/17/2012 3:00	0.0087	--	6/17/2012 3:00	0.0077	--
6/17/2012 4:00	0.0075	--	6/17/2012 4:00	0.0085	--	6/17/2012 4:00	0.0062	--
6/17/2012 5:00	0.0078	--	6/17/2012 5:00	0.0092	--	6/17/2012 5:00	0.0063	--
6/17/2012 6:00	0.0078	--	6/17/2012 6:00	0.0088	--	6/17/2012 6:00	0.0068	--
6/17/2012 7:00	0.0078	--	6/17/2012 7:00	0.0090	--	6/17/2012 7:00	0.0079	--
6/17/2012 8:00	0.0077	--	6/17/2012 8:00	0.0088	--	6/17/2012 8:00	0.0075	--
6/17/2012 9:00	0.0077	--	6/17/2012 9:00	0.0088	--	6/17/2012 9:00	0.0094	--

Package Boiler No. 1 EPN 81BF01			Package Boiler No. 2 EPN 50BF02			Package Boiler No. 3 EPN 50BF03		
Date	NO_X (lb/MMBtu)	NO_X (lb/MMBtu) 30-day Rolling Average	Date	NO_X (lb/MMBtu)	NO_X (lb/MMBtu) 30-day Rolling Average	Date	NO_X (lb/MMBtu)	NO_X (lb/MMBtu) 30-day Rolling Average
6/17/2012 10:00	0.0077	--	6/17/2012 10:00	0.0088	--	6/17/2012 10:00	0.0099	--
6/17/2012 11:00	0.0077	--	6/17/2012 11:00	0.0087	--	6/17/2012 11:00	0.0083	--
6/17/2012 12:00	0.0077	--	6/17/2012 12:00	0.0087	--	6/17/2012 12:00	0.0081	--
6/17/2012 13:00	0.0077	--	6/17/2012 13:00	0.0087	--	6/17/2012 13:00	0.0083	--
6/17/2012 14:00	0.0077	--	6/17/2012 14:00	0.0087	--	6/17/2012 14:00	0.0075	--
6/17/2012 15:00	0.0075	--	6/17/2012 15:00	0.0086	--	6/17/2012 15:00	0.0041	--
6/17/2012 16:00	0.0076	--	6/17/2012 16:00	0.0086	--	6/17/2012 16:00	0.0037	--
6/17/2012 17:00	0.0077	--	6/17/2012 17:00	0.0087	--	6/17/2012 17:00	0.0042	--
6/17/2012 18:00	0.0075	--	6/17/2012 18:00	0.0086	--	6/17/2012 18:00	0.0046	--
6/17/2012 19:00	0.0075	--	6/17/2012 19:00	0.0085	--	6/17/2012 19:00	0.0039	--
6/17/2012 20:00	0.0076	--	6/17/2012 20:00	0.0086	--	6/17/2012 20:00	0.0039	--
6/17/2012 21:00	0.0076	--	6/17/2012 21:00	0.0086	--	6/17/2012 21:00	0.0039	--
6/17/2012 22:00	0.0077	--	6/17/2012 22:00	0.0087	--	6/17/2012 22:00	0.0041	--
6/17/2012 23:00	0.0077	0.0085	6/17/2012 23:00	0.0086	0.0087	6/17/2012 23:00	0.0041	0.0073
6/18/2012 0:00	0.0076	--	6/18/2012 0:00	0.0087	--	6/18/2012 0:00	0.0041	--
6/18/2012 1:00	0.0076	--	6/18/2012 1:00	0.0086	--	6/18/2012 1:00	0.0037	--
6/18/2012 2:00	0.0077	--	6/18/2012 2:00	0.0087	--	6/18/2012 2:00	0.0037	--
6/18/2012 3:00	0.0076	--	6/18/2012 3:00	0.0087	--	6/18/2012 3:00	0.0038	--
6/18/2012 4:00	0.0076	--	6/18/2012 4:00	0.0086	--	6/18/2012 4:00	0.0035	--
6/18/2012 5:00	0.0076	--	6/18/2012 5:00	0.0087	--	6/18/2012 5:00	0.0037	--
6/18/2012 6:00	0.0076	--	6/18/2012 6:00	0.0087	--	6/18/2012 6:00	0.0034	--
6/18/2012 7:00	0.0077	--	6/18/2012 7:00	0.0088	--	6/18/2012 7:00	0.0033	--
6/18/2012 8:00	0.0078	--	6/18/2012 8:00	0.0089	--	6/18/2012 8:00	0.0038	--
6/18/2012 9:00	0.0077	--	6/18/2012 9:00	0.0088	--	6/18/2012 9:00	0.0034	--
6/18/2012 10:00	0.0077	--	6/18/2012 10:00	0.0088	--	6/18/2012 10:00	0.0037	--
6/18/2012 11:00	0.0075	--	6/18/2012 11:00	0.0084	--	6/18/2012 11:00	0.0035	--
6/18/2012 12:00	0.0077	--	6/18/2012 12:00	0.0086	--	6/18/2012 12:00	0.0032	--
6/18/2012 13:00	0.0077	--	6/18/2012 13:00	0.0089	--	6/18/2012 13:00	0.0072	--
6/18/2012 14:00	0.0075	--	6/18/2012 14:00	0.0089	--	6/18/2012 14:00	0.0083	--
6/18/2012 15:00	0.0078	--	6/18/2012 15:00	0.0091	--	6/18/2012 15:00	0.0094	--
6/18/2012 16:00	0.0075	--	6/18/2012 16:00	0.0082	--	6/18/2012 16:00	0.0062	--
6/18/2012 17:00	0.0076	--	6/18/2012 17:00	0.0085	--	6/18/2012 17:00	0.0040	--
6/18/2012 18:00	0.0077	--	6/18/2012 18:00	0.0087	--	6/18/2012 18:00	0.0038	--
6/18/2012 19:00	0.0080	--	6/18/2012 19:00	0.0093	--	6/18/2012 19:00	0.0065	--
6/18/2012 20:00	0.0075	--	6/18/2012 20:00	0.0085	--	6/18/2012 20:00	0.0048	--
6/18/2012 21:00	0.0075	--	6/18/2012 21:00	0.0086	--	6/18/2012 21:00	0.0039	--
6/18/2012 22:00	0.0076	--	6/18/2012 22:00	0.0087	--	6/18/2012 22:00	0.0033	--
6/18/2012 23:00	0.0076	0.0084	6/18/2012 23:00	0.0087	0.0087	6/18/2012 23:00	0.0031	0.0072
6/19/2012 0:00	0.0076	--	6/19/2012 0:00	0.0087	--	6/19/2012 0:00	0.0031	--
6/19/2012 1:00	0.0077	--	6/19/2012 1:00	0.0087	--	6/19/2012 1:00	0.0027	--
6/19/2012 2:00	0.0077	--	6/19/2012 2:00	0.0087	--	6/19/2012 2:00	0.0026	--

Package Boiler No. 1 EPN 81BF01			Package Boiler No. 2 EPN 50BF02			Package Boiler No. 3 EPN 50BF03		
Date	NO_X (lb/MMBtu)	NO_X (lb/MMBtu) 30-day Rolling Average	Date	NO_X (lb/MMBtu)	NO_X (lb/MMBtu) 30-day Rolling Average	Date	NO_X (lb/MMBtu)	NO_X (lb/MMBtu) 30-day Rolling Average
6/19/2012 3:00	0.0077	--	6/19/2012 3:00	0.0088	--	6/19/2012 3:00	0.0030	--
6/19/2012 4:00	0.0077	--	6/19/2012 4:00	0.0088	--	6/19/2012 4:00	0.0030	--
6/19/2012 5:00	0.0074	--	6/19/2012 5:00	0.0082	--	6/19/2012 5:00	0.0030	--
6/19/2012 6:00	0.0076	--	6/19/2012 6:00	0.0084	--	6/19/2012 6:00	0.0033	--
6/19/2012 7:00	0.0076	--	6/19/2012 7:00	0.0087	--	6/19/2012 7:00	0.0034	--
6/19/2012 8:00	0.0077	--	6/19/2012 8:00	0.0087	--	6/19/2012 8:00	0.0024	--
6/19/2012 9:00	0.0079	--	6/19/2012 9:00	0.0090	--	6/19/2012 9:00	0.0033	--
6/19/2012 10:00	0.0075	--	6/19/2012 10:00	0.0085	--	6/19/2012 10:00	0.0029	--
6/19/2012 11:00	0.0076	--	6/19/2012 11:00	0.0086	--	6/19/2012 11:00	0.0027	--
6/19/2012 12:00	0.0077	--	6/19/2012 12:00	0.0088	--	6/19/2012 12:00	0.0027	--
6/19/2012 13:00	0.0077	--	6/19/2012 13:00	0.0087	--	6/19/2012 13:00	0.0026	--
6/19/2012 14:00	0.0075	--	6/19/2012 14:00	0.0088	--	6/19/2012 14:00	0.0041	--
6/19/2012 15:00	0.0078	--	6/19/2012 15:00	0.0090	--	6/19/2012 15:00	0.0028	--
6/19/2012 16:00	0.0076	--	6/19/2012 16:00	0.0086	--	6/19/2012 16:00	0.0031	--
6/19/2012 17:00	0.0077	--	6/19/2012 17:00	0.0087	--	6/19/2012 17:00	0.0027	--
6/19/2012 18:00	0.0075	--	6/19/2012 18:00	0.0086	--	6/19/2012 18:00	0.0026	--
6/19/2012 19:00	0.0076	--	6/19/2012 19:00	0.0087	--	6/19/2012 19:00	0.0027	--
6/19/2012 20:00	0.0078	--	6/19/2012 20:00	0.0089	--	6/19/2012 20:00	0.0027	--
6/19/2012 21:00	0.0076	--	6/19/2012 21:00	0.0087	--	6/19/2012 21:00	0.0025	--
6/19/2012 22:00	0.0077	--	6/19/2012 22:00	0.0088	--	6/19/2012 22:00	0.0026	--
6/19/2012 23:00	0.0077	0.0084	6/19/2012 23:00	0.0087	0.0087	6/19/2012 23:00	0.0026	0.0070
6/20/2012 0:00	0.0077	--	6/20/2012 0:00	0.0088	--	6/20/2012 0:00	0.0027	--
6/20/2012 1:00	0.0077	--	6/20/2012 1:00	0.0088	--	6/20/2012 1:00	0.0027	--
6/20/2012 2:00	0.0077	--	6/20/2012 2:00	0.0087	--	6/20/2012 2:00	0.0026	--
6/20/2012 3:00	0.0077	--	6/20/2012 3:00	0.0089	--	6/20/2012 3:00	0.0026	--
6/20/2012 4:00	0.0076	--	6/20/2012 4:00	0.0086	--	6/20/2012 4:00	0.0026	--
6/20/2012 5:00	0.0084	--	6/20/2012 5:00	0.0083	--	6/20/2012 5:00	0.0028	--
6/20/2012 6:00	0.0077	--	6/20/2012 6:00	0.0087	--	6/20/2012 6:00	0.0026	--
6/20/2012 7:00	0.0077	--	6/20/2012 7:00	0.0092	--	6/20/2012 7:00	0.0034	--
6/20/2012 8:00	0.0077	--	6/20/2012 8:00	0.0088	--	6/20/2012 8:00	0.0039	--
6/20/2012 9:00	0.0077	--	6/20/2012 9:00	0.0088	--	6/20/2012 9:00	0.0040	--
6/20/2012 10:00	0.0077	--	6/20/2012 10:00	0.0089	--	6/20/2012 10:00	0.0040	--
6/20/2012 11:00	0.0077	--	6/20/2012 11:00	0.0087	--	6/20/2012 11:00	0.0038	--
6/20/2012 12:00	0.0077	--	6/20/2012 12:00	0.0088	--	6/20/2012 12:00	0.0037	--
6/20/2012 13:00	0.0077	--	6/20/2012 13:00	0.0084	--	6/20/2012 13:00	0.0029	--
6/20/2012 14:00	0.0077	--	6/20/2012 14:00	0.0087	--	6/20/2012 14:00	0.0026	--
6/20/2012 15:00	0.0076	--	6/20/2012 15:00	0.0087	--	6/20/2012 15:00	0.0026	--
6/20/2012 16:00	0.0077	--	6/20/2012 16:00	0.0087	--	6/20/2012 16:00	0.0026	--
6/20/2012 17:00	0.0077	--	6/20/2012 17:00	0.0087	--	6/20/2012 17:00	0.0026	--
6/20/2012 18:00	0.0077	--	6/20/2012 18:00	0.0088	--	6/20/2012 18:00	0.0026	--
6/20/2012 19:00	0.0076	--	6/20/2012 19:00	0.0087	--	6/20/2012 19:00	0.0026	--

Package Boiler No. 1 EPN 81BF01			Package Boiler No. 2 EPN 50BF02			Package Boiler No. 3 EPN 50BF03		
Date	NO_X (lb/MMBtu)	NO_X (lb/MMBtu) 30-day Rolling Average	Date	NO_X (lb/MMBtu)	NO_X (lb/MMBtu) 30-day Rolling Average	Date	NO_X (lb/MMBtu)	NO_X (lb/MMBtu) 30-day Rolling Average
6/20/2012 20:00	0.0076	--	6/20/2012 20:00	0.0086	--	6/20/2012 20:00	0.0026	--
6/20/2012 21:00	0.0076	--	6/20/2012 21:00	0.0087	--	6/20/2012 21:00	0.0026	--
6/20/2012 22:00	0.0077	--	6/20/2012 22:00	0.0088	--	6/20/2012 22:00	0.0026	--
6/20/2012 23:00	0.0077	0.0084	6/20/2012 23:00	0.0088	0.0087	6/20/2012 23:00	0.0025	0.0069
6/21/2012 0:00	0.0077	--	6/21/2012 0:00	0.0087	--	6/21/2012 0:00	0.0024	--
6/21/2012 1:00	0.0076	--	6/21/2012 1:00	0.0088	--	6/21/2012 1:00	0.0021	--
6/21/2012 2:00	0.0076	--	6/21/2012 2:00	0.0087	--	6/21/2012 2:00	0.0020	--
6/21/2012 3:00	0.0076	--	6/21/2012 3:00	0.0087	--	6/21/2012 3:00	0.0020	--
6/21/2012 4:00	0.0077	--	6/21/2012 4:00	0.0087	--	6/21/2012 4:00	0.0024	--
6/21/2012 5:00	0.0077	--	6/21/2012 5:00	0.0091	--	6/21/2012 5:00	0.0025	--
6/21/2012 6:00	0.0076	--	6/21/2012 6:00	DOWNTIME	--	6/21/2012 6:00	0.0022	--
6/21/2012 7:00	0.0077	--	6/21/2012 7:00	DOWNTIME	--	6/21/2012 7:00	0.0025	--
6/21/2012 8:00	0.0077	--	6/21/2012 8:00	DOWNTIME	--	6/21/2012 8:00	0.0026	--
6/21/2012 9:00	0.0077	--	6/21/2012 9:00	DOWNTIME	--	6/21/2012 9:00	0.0026	--
6/21/2012 10:00	0.0077	--	6/21/2012 10:00	DOWNTIME	--	6/21/2012 10:00	0.0026	--
6/21/2012 11:00	0.0076	--	6/21/2012 11:00	DOWNTIME	--	6/21/2012 11:00	0.0027	--
6/21/2012 12:00	0.0077	--	6/21/2012 12:00	DOWNTIME	--	6/21/2012 12:00	0.0026	--
6/21/2012 13:00	0.0076	--	6/21/2012 13:00	DOWNTIME	--	6/21/2012 13:00	0.0026	--
6/21/2012 14:00	0.0076	--	6/21/2012 14:00	DOWNTIME	--	6/21/2012 14:00	0.0026	--
6/21/2012 15:00	0.0076	--	6/21/2012 15:00	DOWNTIME	--	6/21/2012 15:00	0.0026	--
6/21/2012 16:00	0.0076	--	6/21/2012 16:00	DOWNTIME	--	6/21/2012 16:00	0.0026	--
6/21/2012 17:00	0.0076	--	6/21/2012 17:00	DOWNTIME	--	6/21/2012 17:00	0.0026	--
6/21/2012 18:00	0.0074	--	6/21/2012 18:00	DOWNTIME	--	6/21/2012 18:00	0.0025	--
6/21/2012 19:00	0.0076	--	6/21/2012 19:00	DOWNTIME	--	6/21/2012 19:00	0.0026	--
6/21/2012 20:00	0.0076	--	6/21/2012 20:00	DOWNTIME	--	6/21/2012 20:00	0.0024	--
6/21/2012 21:00	0.0076	--	6/21/2012 21:00	DOWNTIME	--	6/21/2012 21:00	0.0021	--
6/21/2012 22:00	0.0076	--	6/21/2012 22:00	DOWNTIME	--	6/21/2012 22:00	0.0024	--
6/21/2012 23:00	0.0076	0.0083	6/21/2012 23:00	DOWNTIME	0.0087	6/21/2012 23:00	0.0025	0.0067
6/22/2012 0:00	0.0076	--	6/22/2012 0:00	0.0087	--	6/22/2012 0:00	0.0025	--
6/22/2012 1:00	0.0077	--	6/22/2012 1:00	0.0089	--	6/22/2012 1:00	0.0026	--
6/22/2012 2:00	0.0076	--	6/22/2012 2:00	0.0087	--	6/22/2012 2:00	0.0027	--
6/22/2012 3:00	0.0076	--	6/22/2012 3:00	0.0088	--	6/22/2012 3:00	0.0028	--
6/22/2012 4:00	0.0076	--	6/22/2012 4:00	0.0087	--	6/22/2012 4:00	0.0030	--
6/22/2012 5:00	0.0084	--	6/22/2012 5:00	0.0096	--	6/22/2012 5:00	0.0033	--
6/22/2012 6:00	0.0076	--	6/22/2012 6:00	DOWNTIME	--	6/22/2012 6:00	0.0030	--
6/22/2012 7:00	0.0078	--	6/22/2012 7:00	DOWNTIME	--	6/22/2012 7:00	0.0059	--
6/22/2012 8:00	0.0078	--	6/22/2012 8:00	DOWNTIME	--	6/22/2012 8:00	0.0061	--
6/22/2012 9:00	0.0078	--	6/22/2012 9:00	DOWNTIME	--	6/22/2012 9:00	0.0083	--
6/22/2012 10:00	0.0076	--	6/22/2012 10:00	DOWNTIME	--	6/22/2012 10:00	0.0075	--
6/22/2012 11:00	0.0075	--	6/22/2012 11:00	DOWNTIME	--	6/22/2012 11:00	0.0048	--
6/22/2012 12:00	0.0077	--	6/22/2012 12:00	DOWNTIME	--	6/22/2012 12:00	0.0035	--

Package Boiler No. 1 EPN 81BF01			Package Boiler No. 2 EPN 50BF02			Package Boiler No. 3 EPN 50BF03		
Date	NO_X (lb/MMBtu)	NO_X (lb/MMBtu) 30-day Rolling Average	Date	NO_X (lb/MMBtu)	NO_X (lb/MMBtu) 30-day Rolling Average	Date	NO_X (lb/MMBtu)	NO_X (lb/MMBtu) 30-day Rolling Average
6/22/2012 13:00	0.0076	--	6/22/2012 13:00	DOWNTIME	--	6/22/2012 13:00	0.0029	--
6/22/2012 14:00	0.0076	--	6/22/2012 14:00	DOWNTIME	--	6/22/2012 14:00	0.0026	--
6/22/2012 15:00	0.0075	--	6/22/2012 15:00	DOWNTIME	--	6/22/2012 15:00	0.0026	--
6/22/2012 16:00	0.0076	--	6/22/2012 16:00	DOWNTIME	--	6/22/2012 16:00	0.0027	--
6/22/2012 17:00	0.0076	--	6/22/2012 17:00	DOWNTIME	--	6/22/2012 17:00	0.0026	--
6/22/2012 18:00	0.0076	--	6/22/2012 18:00	DOWNTIME	--	6/22/2012 18:00	0.0026	--
6/22/2012 19:00	0.0076	--	6/22/2012 19:00	DOWNTIME	--	6/22/2012 19:00	0.0026	--
6/22/2012 20:00	0.0076	--	6/22/2012 20:00	DOWNTIME	--	6/22/2012 20:00	0.0026	--
6/22/2012 21:00	0.0076	--	6/22/2012 21:00	DOWNTIME	--	6/22/2012 21:00	0.0024	--
6/22/2012 22:00	0.0076	--	6/22/2012 22:00	DOWNTIME	--	6/22/2012 22:00	0.0020	--
6/22/2012 23:00	0.0076	0.0083	6/22/2012 23:00	DOWNTIME	0.0087	6/22/2012 23:00	0.0022	0.0065
6/23/2012 0:00	0.0076	--	6/23/2012 0:00	DOWNTIME	--	6/23/2012 0:00	0.0022	--
6/23/2012 1:00	0.0076	--	6/23/2012 1:00	DOWNTIME	--	6/23/2012 1:00	0.0023	--
6/23/2012 2:00	0.0076	--	6/23/2012 2:00	DOWNTIME	--	6/23/2012 2:00	0.0024	--
6/23/2012 3:00	0.0076	--	6/23/2012 3:00	DOWNTIME	--	6/23/2012 3:00	0.0026	--
6/23/2012 4:00	0.0076	--	6/23/2012 4:00	DOWNTIME	--	6/23/2012 4:00	0.0033	--
6/23/2012 5:00	0.0082	--	6/23/2012 5:00	DOWNTIME	--	6/23/2012 5:00	0.0040	--
6/23/2012 6:00	0.0077	--	6/23/2012 6:00	DOWNTIME	--	6/23/2012 6:00	0.0033	--
6/23/2012 7:00	0.0077	--	6/23/2012 7:00	DOWNTIME	--	6/23/2012 7:00	0.0029	--
6/23/2012 8:00	0.0077	--	6/23/2012 8:00	DOWNTIME	--	6/23/2012 8:00	0.0032	--
6/23/2012 9:00	0.0077	--	6/23/2012 9:00	0.0070	--	6/23/2012 9:00	0.0033	--
6/23/2012 10:00	0.0077	--	6/23/2012 10:00	0.0087	--	6/23/2012 10:00	0.0036	--
6/23/2012 11:00	0.0077	--	6/23/2012 11:00	0.0087	--	6/23/2012 11:00	0.0036	--
6/23/2012 12:00	0.0076	--	6/23/2012 12:00	0.0087	--	6/23/2012 12:00	0.0032	--
6/23/2012 13:00	0.0076	--	6/23/2012 13:00	0.0086	--	6/23/2012 13:00	0.0028	--
6/23/2012 14:00	0.0076	--	6/23/2012 14:00	0.0086	--	6/23/2012 14:00	0.0034	--
6/23/2012 15:00	0.0076	--	6/23/2012 15:00	0.0085	--	6/23/2012 15:00	0.0030	--
6/23/2012 16:00	0.0076	--	6/23/2012 16:00	0.0086	--	6/23/2012 16:00	0.0027	--
6/23/2012 17:00	0.0076	--	6/23/2012 17:00	0.0087	--	6/23/2012 17:00	0.0029	--
6/23/2012 18:00	0.0076	--	6/23/2012 18:00	0.0086	--	6/23/2012 18:00	0.0032	--
6/23/2012 19:00	0.0076	--	6/23/2012 19:00	0.0086	--	6/23/2012 19:00	0.0032	--
6/23/2012 20:00	0.0076	--	6/23/2012 20:00	0.0086	--	6/23/2012 20:00	0.0027	--
6/23/2012 21:00	0.0076	--	6/23/2012 21:00	0.0087	--	6/23/2012 21:00	0.0027	--
6/23/2012 22:00	0.0075	--	6/23/2012 22:00	0.0084	--	6/23/2012 22:00	0.0026	--
6/23/2012 23:00	0.0076	0.0083	6/23/2012 23:00	0.0087	0.0087	6/23/2012 23:00	0.0026	0.0063
6/24/2012 0:00	0.0076	--	6/24/2012 0:00	0.0087	--	6/24/2012 0:00	0.0026	--
6/24/2012 1:00	0.0076	--	6/24/2012 1:00	0.0086	--	6/24/2012 1:00	0.0026	--
6/24/2012 2:00	0.0076	--	6/24/2012 2:00	0.0087	--	6/24/2012 2:00	0.0026	--
6/24/2012 3:00	0.0076	--	6/24/2012 3:00	0.0087	--	6/24/2012 3:00	0.0037	--
6/24/2012 4:00	0.0076	--	6/24/2012 4:00	0.0087	--	6/24/2012 4:00	0.0061	--
6/24/2012 5:00	0.0077	--	6/24/2012 5:00	0.0090	--	6/24/2012 5:00	0.0076	--

Package Boiler No. 1 EPN 81BF01			Package Boiler No. 2 EPN 50BF02			Package Boiler No. 3 EPN 50BF03		
Date	NO_X (lb/MMBtu)	NO_X (lb/MMBtu) 30-day Rolling Average	Date	NO_X (lb/MMBtu)	NO_X (lb/MMBtu) 30-day Rolling Average	Date	NO_X (lb/MMBtu)	NO_X (lb/MMBtu) 30-day Rolling Average
6/24/2012 6:00	0.0076	--	6/24/2012 6:00	0.0084	--	6/24/2012 6:00	0.0076	--
6/24/2012 7:00	0.0077	--	6/24/2012 7:00	0.0085	--	6/24/2012 7:00	0.0073	--
6/24/2012 8:00	0.0077	--	6/24/2012 8:00	0.0087	--	6/24/2012 8:00	0.0089	--
6/24/2012 9:00	0.0077	--	6/24/2012 9:00	0.0087	--	6/24/2012 9:00	0.0084	--
6/24/2012 10:00	0.0077	--	6/24/2012 10:00	0.0089	--	6/24/2012 10:00	0.0084	--
6/24/2012 11:00	0.0077	--	6/24/2012 11:00	0.0088	--	6/24/2012 11:00	0.0058	--
6/24/2012 12:00	0.0068	--	6/24/2012 12:00	0.0086	--	6/24/2012 12:00	0.0046	--
6/24/2012 13:00	0.0047	--	6/24/2012 13:00	0.0088	--	6/24/2012 13:00	0.0051	--
6/24/2012 14:00	0.0044	--	6/24/2012 14:00	0.0086	--	6/24/2012 14:00	0.0051	--
6/24/2012 15:00	DOWNTIME	--	6/24/2012 15:00	0.0086	--	6/24/2012 15:00	0.0043	--
6/24/2012 16:00	DOWNTIME	--	6/24/2012 16:00	0.0087	--	6/24/2012 16:00	0.0048	--
6/24/2012 17:00	0.0076	--	6/24/2012 17:00	0.0086	--	6/24/2012 17:00	0.0062	--
6/24/2012 18:00	0.0077	--	6/24/2012 18:00	0.0087	--	6/24/2012 18:00	0.0072	--
6/24/2012 19:00	0.0075	--	6/24/2012 19:00	0.0086	--	6/24/2012 19:00	0.0075	--
6/24/2012 20:00	0.0077	--	6/24/2012 20:00	0.0087	--	6/24/2012 20:00	0.0078	--
6/24/2012 21:00	0.0075	--	6/24/2012 21:00	0.0086	--	6/24/2012 21:00	0.0081	--
6/24/2012 22:00	0.0077	--	6/24/2012 22:00	0.0086	--	6/24/2012 22:00	0.0069	--
6/24/2012 23:00	0.0074	0.0082	6/24/2012 23:00	0.0085	0.0087	6/24/2012 23:00	0.0064	0.0062
6/25/2012 0:00	0.0075	--	6/25/2012 0:00	0.0085	--	6/25/2012 0:00	0.0056	--
6/25/2012 1:00	0.0076	--	6/25/2012 1:00	0.0087	--	6/25/2012 1:00	0.0066	--
6/25/2012 2:00	0.0078	--	6/25/2012 2:00	0.0087	--	6/25/2012 2:00	0.0074	--
6/25/2012 3:00	0.0076	--	6/25/2012 3:00	0.0087	--	6/25/2012 3:00	0.0074	--
6/25/2012 4:00	0.0075	--	6/25/2012 4:00	0.0087	--	6/25/2012 4:00	0.0068	--
6/25/2012 5:00	0.0074	--	6/25/2012 5:00	0.0092	--	6/25/2012 5:00	0.0068	--
6/25/2012 6:00	0.0075	--	6/25/2012 6:00	0.0088	--	6/25/2012 6:00	0.0089	--
6/25/2012 7:00	0.0076	--	6/25/2012 7:00	0.0084	--	6/25/2012 7:00	0.0104	--
6/25/2012 8:00	0.0076	--	6/25/2012 8:00	0.0086	--	6/25/2012 8:00	0.0103	--
6/25/2012 9:00	0.0077	--	6/25/2012 9:00	0.0087	--	6/25/2012 9:00	0.0089	--
6/25/2012 10:00	0.0077	--	6/25/2012 10:00	0.0087	--	6/25/2012 10:00	0.0099	--
6/25/2012 11:00	0.0076	--	6/25/2012 11:00	0.0086	--	6/25/2012 11:00	0.0095	--
6/25/2012 12:00	0.0077	--	6/25/2012 12:00	0.0088	--	6/25/2012 12:00	0.0098	--
6/25/2012 13:00	0.0078	--	6/25/2012 13:00	0.0087	--	6/25/2012 13:00	0.0094	--
6/25/2012 14:00	0.0075	--	6/25/2012 14:00	0.0088	--	6/25/2012 14:00	0.0072	--
6/25/2012 15:00	0.0076	--	6/25/2012 15:00	0.0085	--	6/25/2012 15:00	0.0062	--
6/25/2012 16:00	0.0076	--	6/25/2012 16:00	0.0086	--	6/25/2012 16:00	0.0066	--
6/25/2012 17:00	0.0076	--	6/25/2012 17:00	0.0085	--	6/25/2012 17:00	0.0036	--
6/25/2012 18:00	0.0074	--	6/25/2012 18:00	0.0086	--	6/25/2012 18:00	0.0051	--
6/25/2012 19:00	0.0077	--	6/25/2012 19:00	0.0088	--	6/25/2012 19:00	0.0033	--
6/25/2012 20:00	0.0078	--	6/25/2012 20:00	0.0087	--	6/25/2012 20:00	0.0043	--
6/25/2012 21:00	0.0075	--	6/25/2012 21:00	0.0085	--	6/25/2012 21:00	0.0034	--
6/25/2012 22:00	0.0075	--	6/25/2012 22:00	0.0085	--	6/25/2012 22:00	0.0032	--

Package Boiler No. 1 EPN 81BF01			Package Boiler No. 2 EPN 50BF02			Package Boiler No. 3 EPN 50BF03		
Date	NO_X (lb/MMBtu)	NO_X (lb/MMBtu) 30-day Rolling Average	Date	NO_X (lb/MMBtu)	NO_X (lb/MMBtu) 30-day Rolling Average	Date	NO_X (lb/MMBtu)	NO_X (lb/MMBtu) 30-day Rolling Average
6/25/2012 23:00	0.0076	0.0082	6/25/2012 23:00	0.0087	0.0087	6/25/2012 23:00	0.0030	0.0062
6/26/2012 0:00	0.0076	--	6/26/2012 0:00	0.0087	--	6/26/2012 0:00	0.0030	--
6/26/2012 1:00	0.0076	--	6/26/2012 1:00	0.0087	--	6/26/2012 1:00	0.0033	--
6/26/2012 2:00	0.0076	--	6/26/2012 2:00	0.0086	--	6/26/2012 2:00	0.0028	--
6/26/2012 3:00	0.0077	--	6/26/2012 3:00	0.0086	--	6/26/2012 3:00	0.0051	--
6/26/2012 4:00	0.0076	--	6/26/2012 4:00	0.0086	--	6/26/2012 4:00	0.0036	--
6/26/2012 5:00	0.0082	--	6/26/2012 5:00	0.0084	--	6/26/2012 5:00	0.0040	--
6/26/2012 6:00	0.0081	--	6/26/2012 6:00	0.0087	--	6/26/2012 6:00	0.0037	--
6/26/2012 7:00	0.0077	--	6/26/2012 7:00	0.0087	--	6/26/2012 7:00	0.0053	--
6/26/2012 8:00	0.0077	--	6/26/2012 8:00	0.0086	--	6/26/2012 8:00	0.0084	--
6/26/2012 9:00	0.0078	--	6/26/2012 9:00	0.0089	--	6/26/2012 9:00	0.0101	--
6/26/2012 10:00	0.0078	--	6/26/2012 10:00	0.0088	--	6/26/2012 10:00	0.0082	--
6/26/2012 11:00	0.0077	--	6/26/2012 11:00	0.0088	--	6/26/2012 11:00	0.0101	--
6/26/2012 12:00	0.0077	--	6/26/2012 12:00	0.0089	--	6/26/2012 12:00	0.0090	--
6/26/2012 13:00	0.0076	--	6/26/2012 13:00	0.0085	--	6/26/2012 13:00	0.0072	--
6/26/2012 14:00	0.0077	--	6/26/2012 14:00	0.0086	--	6/26/2012 14:00	0.0075	--
6/26/2012 15:00	0.0071	--	6/26/2012 15:00	0.0085	--	6/26/2012 15:00	0.0060	--
6/26/2012 16:00	0.0059	--	6/26/2012 16:00	0.0086	--	6/26/2012 16:00	0.0041	--
6/26/2012 17:00	0.0042	--	6/26/2012 17:00	0.0086	--	6/26/2012 17:00	0.0043	--
6/26/2012 18:00	0.0047	--	6/26/2012 18:00	0.0086	--	6/26/2012 18:00	0.0046	--
6/26/2012 19:00	0.0058	--	6/26/2012 19:00	0.0086	--	6/26/2012 19:00	0.0052	--
6/26/2012 20:00	0.0068	--	6/26/2012 20:00	0.0087	--	6/26/2012 20:00	0.0060	--
6/26/2012 21:00	0.0068	--	6/26/2012 21:00	0.0083	--	6/26/2012 21:00	0.0056	--
6/26/2012 22:00	0.0066	--	6/26/2012 22:00	0.0085	--	6/26/2012 22:00	0.0055	--
6/26/2012 23:00	0.0060	0.0082	6/26/2012 23:00	0.0086	0.0087	6/26/2012 23:00	0.0069	0.0061
6/27/2012 0:00	0.0059	--	6/27/2012 0:00	0.0086	--	6/27/2012 0:00	0.0075	--
6/27/2012 1:00	0.0062	--	6/27/2012 1:00	0.0087	--	6/27/2012 1:00	0.0042	--
6/27/2012 2:00	0.0069	--	6/27/2012 2:00	0.0088	--	6/27/2012 2:00	0.0038	--
6/27/2012 3:00	0.0067	--	6/27/2012 3:00	0.0086	--	6/27/2012 3:00	0.0038	--
6/27/2012 4:00	0.0060	--	6/27/2012 4:00	0.0087	--	6/27/2012 4:00	0.0035	--
6/27/2012 5:00	0.0088	--	6/27/2012 5:00	0.0083	--	6/27/2012 5:00	0.0039	--
6/27/2012 6:00	0.0078	--	6/27/2012 6:00	0.0087	--	6/27/2012 6:00	0.0033	--
6/27/2012 7:00	0.0077	--	6/27/2012 7:00	0.0088	--	6/27/2012 7:00	0.0040	--
6/27/2012 8:00	0.0076	--	6/27/2012 8:00	0.0086	--	6/27/2012 8:00	0.0039	--
6/27/2012 9:00	0.0076	--	6/27/2012 9:00	0.0086	--	6/27/2012 9:00	0.0039	--
6/27/2012 10:00	0.0077	--	6/27/2012 10:00	0.0088	--	6/27/2012 10:00	0.0036	--
6/27/2012 11:00	0.0079	--	6/27/2012 11:00	0.0090	--	6/27/2012 11:00	0.0063	--
6/27/2012 12:00	0.0075	--	6/27/2012 12:00	0.0085	--	6/27/2012 12:00	0.0069	--
6/27/2012 13:00	0.0076	--	6/27/2012 13:00	0.0086	--	6/27/2012 13:00	0.0091	--
6/27/2012 14:00	0.0077	--	6/27/2012 14:00	0.0088	--	6/27/2012 14:00	0.0067	--
6/27/2012 15:00	0.0077	--	6/27/2012 15:00	0.0088	--	6/27/2012 15:00	0.0068	--

Package Boiler No. 1 EPN 81BF01			Package Boiler No. 2 EPN 50BF02			Package Boiler No. 3 EPN 50BF03		
Date	NO_X (lb/MMBtu)	NO_X (lb/MMBtu) 30-day Rolling Average	Date	NO_X (lb/MMBtu)	NO_X (lb/MMBtu) 30-day Rolling Average	Date	NO_X (lb/MMBtu)	NO_X (lb/MMBtu) 30-day Rolling Average
6/27/2012 16:00	0.0076	--	6/27/2012 16:00	0.0088	--	6/27/2012 16:00	0.0050	--
6/27/2012 17:00	0.0075	--	6/27/2012 17:00	0.0087	--	6/27/2012 17:00	0.0060	--
6/27/2012 18:00	0.0076	--	6/27/2012 18:00	0.0084	--	6/27/2012 18:00	0.0039	--
6/27/2012 19:00	0.0076	--	6/27/2012 19:00	0.0086	--	6/27/2012 19:00	0.0037	--
6/27/2012 20:00	0.0076	--	6/27/2012 20:00	0.0084	--	6/27/2012 20:00	0.0038	--
6/27/2012 21:00	0.0075	--	6/27/2012 21:00	0.0084	--	6/27/2012 21:00	0.0038	--
6/27/2012 22:00	0.0077	--	6/27/2012 22:00	0.0086	--	6/27/2012 22:00	0.0041	--
6/27/2012 23:00	0.0076	0.0081	6/27/2012 23:00	0.0086	0.0087	6/27/2012 23:00	0.0041	0.0060
6/28/2012 0:00	0.0076	--	6/28/2012 0:00	0.0086	--	6/28/2012 0:00	0.0044	--
6/28/2012 1:00	0.0076	--	6/28/2012 1:00	0.0086	--	6/28/2012 1:00	0.0040	--
6/28/2012 2:00	0.0076	--	6/28/2012 2:00	0.0086	--	6/28/2012 2:00	0.0037	--
6/28/2012 3:00	0.0076	--	6/28/2012 3:00	0.0087	--	6/28/2012 3:00	0.0037	--
6/28/2012 4:00	0.0076	--	6/28/2012 4:00	0.0087	--	6/28/2012 4:00	0.0036	--
6/28/2012 5:00	0.0070	--	6/28/2012 5:00	0.0089	--	6/28/2012 5:00	0.0036	--
6/28/2012 6:00	0.0076	--	6/28/2012 6:00	0.0086	--	6/28/2012 6:00	0.0033	--
6/28/2012 7:00	0.0077	--	6/28/2012 7:00	0.0087	--	6/28/2012 7:00	0.0031	--
6/28/2012 8:00	0.0055	--	6/28/2012 8:00	0.0087	--	6/28/2012 8:00	0.0034	--
6/28/2012 9:00	0.0076	--	6/28/2012 9:00	0.0087	--	6/28/2012 9:00	0.0035	--
6/28/2012 10:00	0.0078	--	6/28/2012 10:00	0.0088	--	6/28/2012 10:00	0.0036	--
6/28/2012 11:00	0.0076	--	6/28/2012 11:00	0.0087	--	6/28/2012 11:00	0.0036	--
6/28/2012 12:00	0.0077	--	6/28/2012 12:00	0.0086	--	6/28/2012 12:00	0.0035	--
6/28/2012 13:00	0.0078	--	6/28/2012 13:00	0.0088	--	6/28/2012 13:00	0.0042	--
6/28/2012 14:00	0.0076	--	6/28/2012 14:00	0.0087	--	6/28/2012 14:00	0.0056	--
6/28/2012 15:00	0.0075	--	6/28/2012 15:00	0.0086	--	6/28/2012 15:00	0.0064	--
6/28/2012 16:00	0.0076	--	6/28/2012 16:00	0.0088	--	6/28/2012 16:00	0.0069	--
6/28/2012 17:00	0.0076	--	6/28/2012 17:00	0.0086	--	6/28/2012 17:00	0.0058	--
6/28/2012 18:00	0.0076	--	6/28/2012 18:00	0.0085	--	6/28/2012 18:00	0.0040	--
6/28/2012 19:00	0.0058	--	6/28/2012 19:00	0.0084	--	6/28/2012 19:00	0.0050	--
6/28/2012 20:00	0.0043	--	6/28/2012 20:00	0.0086	--	6/28/2012 20:00	0.0049	--
6/28/2012 21:00	0.0044	--	6/28/2012 21:00	0.0087	--	6/28/2012 21:00	0.0042	--
6/28/2012 22:00	0.0048	--	6/28/2012 22:00	0.0086	--	6/28/2012 22:00	0.0042	--
6/28/2012 23:00	0.0045	0.0081	6/28/2012 23:00	0.0087	0.0087	6/28/2012 23:00	0.0034	0.0058
6/29/2012 0:00	0.0046	--	6/29/2012 0:00	0.0087	--	6/29/2012 0:00	0.0038	--
6/29/2012 1:00	0.0045	--	6/29/2012 1:00	0.0087	--	6/29/2012 1:00	0.0043	--
6/29/2012 2:00	0.0046	--	6/29/2012 2:00	0.0087	--	6/29/2012 2:00	0.0038	--
6/29/2012 3:00	0.0051	--	6/29/2012 3:00	0.0087	--	6/29/2012 3:00	0.0046	--
6/29/2012 4:00	0.0077	--	6/29/2012 4:00	0.0087	--	6/29/2012 4:00	0.0044	--
6/29/2012 5:00	0.0054	--	6/29/2012 5:00	0.0090	--	6/29/2012 5:00	0.0036	--
6/29/2012 6:00	0.0075	--	6/29/2012 6:00	0.0439	--	6/29/2012 6:00	0.0034	--
6/29/2012 7:00	0.0076	--	6/29/2012 7:00	0.0087	--	6/29/2012 7:00	0.0035	--
6/29/2012 8:00	0.0077	--	6/29/2012 8:00	0.0088	--	6/29/2012 8:00	0.0032	--

Package Boiler No. 1 EPN 81BF01			Package Boiler No. 2 EPN 50BF02			Package Boiler No. 3 EPN 50BF03		
Date	NO_X (lb/MMBtu)	NO_X (lb/MMBtu) 30-day Rolling Average	Date	NO_X (lb/MMBtu)	NO_X (lb/MMBtu) 30-day Rolling Average	Date	NO_X (lb/MMBtu)	NO_X (lb/MMBtu) 30-day Rolling Average
6/29/2012 9:00	0.0077	--	6/29/2012 9:00	0.0088	--	6/29/2012 9:00	0.0029	--
6/29/2012 10:00	0.0076	--	6/29/2012 10:00	0.0087	--	6/29/2012 10:00	0.0028	--
6/29/2012 11:00	0.0076	--	6/29/2012 11:00	0.0087	--	6/29/2012 11:00	0.0027	--
6/29/2012 12:00	0.0077	--	6/29/2012 12:00	0.0087	--	6/29/2012 12:00	0.0031	--
6/29/2012 13:00	0.0078	--	6/29/2012 13:00	0.0086	--	6/29/2012 13:00	0.0026	--
6/29/2012 14:00	0.0074	--	6/29/2012 14:00	0.0086	--	6/29/2012 14:00	0.0033	--
6/29/2012 15:00	0.0076	--	6/29/2012 15:00	0.0086	--	6/29/2012 15:00	0.0044	--
6/29/2012 16:00	0.0076	--	6/29/2012 16:00	0.0083	--	6/29/2012 16:00	0.0062	--
6/29/2012 17:00	0.0077	--	6/29/2012 17:00	0.0086	--	6/29/2012 17:00	0.0068	--
6/29/2012 18:00	0.0076	--	6/29/2012 18:00	0.0088	--	6/29/2012 18:00	0.0062	--
6/29/2012 19:00	0.0075	--	6/29/2012 19:00	0.0086	--	6/29/2012 19:00	0.0079	--
6/29/2012 20:00	0.0076	--	6/29/2012 20:00	0.0087	--	6/29/2012 20:00	0.0075	--
6/29/2012 21:00	0.0076	--	6/29/2012 21:00	0.0086	--	6/29/2012 21:00	0.0044	--
6/29/2012 22:00	0.0076	--	6/29/2012 22:00	0.0084	--	6/29/2012 22:00	0.0070	--
6/29/2012 23:00	0.0076	0.0079	6/29/2012 23:00	0.0086	0.0088	6/29/2012 23:00	0.0060	0.0057
6/30/2012 0:00	0.0076	--	6/30/2012 0:00	0.0087	--	6/30/2012 0:00	0.0046	--
6/30/2012 1:00	0.0077	--	6/30/2012 1:00	0.0088	--	6/30/2012 1:00	0.0055	--
6/30/2012 2:00	0.0076	--	6/30/2012 2:00	0.0088	--	6/30/2012 2:00	0.0036	--
6/30/2012 3:00	0.0076	--	6/30/2012 3:00	0.0085	--	6/30/2012 3:00	0.0036	--
6/30/2012 4:00	0.0075	--	6/30/2012 4:00	0.0088	--	6/30/2012 4:00	0.0053	--
6/30/2012 5:00	0.0105	--	6/30/2012 5:00	0.0089	--	6/30/2012 5:00	0.0045	--
6/30/2012 6:00	0.0061	--	6/30/2012 6:00	0.0087	--	6/30/2012 6:00	0.0038	--
6/30/2012 7:00	0.0077	--	6/30/2012 7:00	0.0087	--	6/30/2012 7:00	0.0037	--
6/30/2012 8:00	0.0077	--	6/30/2012 8:00	0.0087	--	6/30/2012 8:00	0.0035	--
6/30/2012 9:00	0.0077	--	6/30/2012 9:00	0.0088	--	6/30/2012 9:00	0.0035	--
6/30/2012 10:00	0.0077	--	6/30/2012 10:00	0.0088	--	6/30/2012 10:00	0.0040	--
6/30/2012 11:00	0.0062	--	6/30/2012 11:00	0.0084	--	6/30/2012 11:00	0.0039	--
6/30/2012 12:00	0.0058	--	6/30/2012 12:00	0.0088	--	6/30/2012 12:00	0.0037	--
6/30/2012 13:00	0.0076	--	6/30/2012 13:00	0.0086	--	6/30/2012 13:00	0.0042	--
6/30/2012 14:00	0.0077	--	6/30/2012 14:00	0.0086	--	6/30/2012 14:00	0.0037	--
6/30/2012 15:00	0.0077	--	6/30/2012 15:00	0.0087	--	6/30/2012 15:00	0.0033	--
6/30/2012 16:00	0.0078	--	6/30/2012 16:00	0.0088	--	6/30/2012 16:00	0.0055	--
6/30/2012 17:00	0.0075	--	6/30/2012 17:00	0.0085	--	6/30/2012 17:00	0.0067	--
6/30/2012 18:00	0.0075	--	6/30/2012 18:00	0.0087	--	6/30/2012 18:00	0.0087	--
6/30/2012 19:00	0.0075	--	6/30/2012 19:00	0.0087	--	6/30/2012 19:00	0.0077	--
6/30/2012 20:00	0.0076	--	6/30/2012 20:00	0.0086	--	6/30/2012 20:00	0.0063	--
6/30/2012 21:00	0.0076	--	6/30/2012 21:00	0.0086	--	6/30/2012 21:00	0.0052	--
6/30/2012 22:00	0.0076	--	6/30/2012 22:00	0.0086	--	6/30/2012 22:00	0.0049	--
6/30/2012 23:00	0.0076	0.0078	6/30/2012 23:00	0.0087	0.0088	6/30/2012 23:00	0.0063	0.0056

Appendix D
FCCU SO_2 Calibration Drift Reports

Fluid Catalytic Cracking Unit (FCCU) EPN 42CB2201 Daily SO_2 CEMS Drift Tests						
Date/Time	**Component**	**Type**	**Reference**	**Measurement**	**Difference**	**Pass/Fail**
1/1/2012 6:05	SO_2	S	202.00	208	6.00	Passed
1/1/2012 6:05	SO_2	Z	0.00	7	7.00	Passed
1/2/2012 6:04	SO_2	S	202.00	216	14.00	Passed
1/2/2012 6:04	SO_2	Z	0.00	9	9.00	Passed
1/2/2012 8:26	SO_2	S	202.00	204	2.00	Passed
1/2/2012 8:26	SO_2	Z	0.00	8	8.00	Passed
1/3/2012 6:05	SO_2	S	202.00	202	0.00	Passed
1/3/2012 6:05	SO_2	Z	0.00	8	8.00	Passed
1/4/2012 6:04	SO_2	S	202.00	198	4.00	Passed
1/4/2012 6:04	SO_2	Z	0.00	8	8.00	Passed
1/5/2012 6:05	SO_2	S	202.00	197	5.00	Passed
1/5/2012 6:05	SO_2	Z	0.00	4	4.00	Passed
1/5/2012 14:10	SO_2	S	202.00	197	5.00	Passed
1/5/2012 14:10	SO_2	Z	0.00	3	3.00	Passed
1/6/2012 6:03	SO_2	S	202.00	192	10.00	Passed
1/6/2012 6:03	SO_2	Z	0.00	0	0.00	Passed
1/7/2012 6:03	SO_2	S	202.00	200	2.00	Passed
1/7/2012 6:03	SO_2	Z	0.00	-4	4.00	Passed
1/8/2012 6:03	SO_2	S	202.00	200	2.00	Passed
1/8/2012 6:03	SO_2	Z	0.00	-3	3.00	Passed
1/9/2012 6:03	SO_2	S	202.00	200	2.00	Passed
1/9/2012 6:03	SO_2	Z	0.00	-3	3.00	Passed
1/9/2012 7:30	SO_2	S	202.00	206	4.00	Passed
1/9/2012 7:30	SO_2	Z	0.00	1	1.00	Passed
1/10/2012 6:03	SO_2	S	202.00	204	2.00	Passed
1/10/2012 6:03	SO_2	Z	0.00	0	0.00	Passed
1/11/2012 6:03	SO_2	S	202.00	201	1.00	Passed
1/11/2012 6:03	SO_2	Z	0.00	-2	2.00	Passed
1/12/2012 6:03	SO_2	S	202.00	200	2.00	Passed
1/12/2012 6:03	SO_2	Z	0.00	-3	3.00	Passed
1/13/2012 6:03	SO_2	S	202.00	195	7.00	Passed
1/13/2012 6:03	SO_2	Z	0.00	-3	3.00	Passed
1/13/2012 7:00	SO_2	S	202.00	202	0.00	Passed
1/13/2012 7:00	SO_2	Z	0.00	-2	2.00	Passed
1/14/2012 6:03	SO_2	S	202.00	203	1.00	Passed
1/14/2012 6:03	SO_2	Z	0.00	-4	4.00	Passed
1/15/2012 6:03	SO_2	S	202.00	201	1.00	Passed
1/15/2012 6:03	SO_2	Z	0.00	-4	4.00	Passed

Fluid Catalytic Cracking Unit (FCCU) EPN 42CB2201 Daily SO_2 CEMS Drift Tests						
Date/Time	**Component**	**Type**	**Reference**	**Measurement**	**Difference**	**Pass/Fail**
1/16/2012 6:03	SO_2	S	202.00	198	4.00	Passed
1/16/2012 6:03	SO_2	Z	0.00	-7	7.00	Passed
1/17/2012 6:03	SO_2	S	202.00	201	1.00	Passed
1/17/2012 6:03	SO_2	Z	0.00	-1	1.00	Passed
1/18/2012 6:03	SO_2	S	202.00	204	2.00	Passed
1/18/2012 6:03	SO_2	Z	0.00	0	0.00	Passed
1/19/2012 6:03	SO_2	S	202.00	201	1.00	Passed
1/19/2012 6:03	SO_2	Z	0.00	-1	1.00	Passed
1/20/2012 6:03	SO_2	S	202.00	203	1.00	Passed
1/20/2012 6:03	SO_2	Z	0.00	1	1.00	Passed
1/21/2012 6:03	SO_2	S	202.00	203	1.00	Passed
1/21/2012 6:03	SO_2	Z	0.00	0	0.00	Passed
1/22/2012 6:03	SO_2	S	202.00	202	0.00	Passed
1/22/2012 6:03	SO_2	Z	0.00	0	0.00	Passed
1/23/2012 6:03	SO_2	S	202.00	204	2.00	Passed
1/23/2012 6:03	SO_2	Z	0.00	0	0.00	Passed
1/24/2012 6:03	SO_2	S	202.00	205	3.00	Passed
1/24/2012 6:03	SO_2	Z	0.00	0	0.00	Passed
1/25/2012 6:04	SO_2	S	202.00	200	2.00	Passed
1/25/2012 6:04	SO_2	Z	0.00	0	0.00	Passed
1/26/2012 6:03	SO_2	S	202.00	204	2.00	Passed
1/26/2012 6:03	SO_2	Z	0.00	1	1.00	Passed
1/27/2012 6:04	SO_2	S	202.00	206	4.00	Passed
1/27/2012 6:04	SO_2	Z	0.00	2	2.00	Passed
1/28/2012 6:03	SO_2	S	202.00	204	2.00	Passed
1/28/2012 6:03	SO_2	Z	0.00	0	0.00	Passed
1/29/2012 6:04	SO_2	S	202.00	208	6.00	Passed
1/29/2012 6:04	SO_2	Z	0.00	1	1.00	Passed
1/30/2012 6:03	SO_2	S	202.00	205	3.00	Passed
1/30/2012 6:03	SO_2	Z	0.00	-1	1.00	Passed
1/31/2012 6:03	SO_2	S	202.00	203	1.00	Passed
1/31/2012 6:03	SO_2	Z	0.00	-2	2.00	Passed
2/1/2012 6:03	SO_2	S	202.00	201	1.00	Passed
2/1/2012 6:03	SO_2	Z	0.00	-2	2.00	Passed
2/2/2012 6:04	SO_2	S	202.00	201	1.00	Passed
2/2/2012 6:04	SO_2	Z	0.00	-2	2.00	Passed
2/3/2012 6:03	SO_2	S	202.00	202	0.00	Passed
2/3/2012 6:03	SO_2	Z	0.00	0	0.00	Passed

Fluid Catalytic Cracking Unit (FCCU) EPN 42CB2201 Daily SO_2 CEMS Drift Tests						
Date/Time	**Component**	**Type**	**Reference**	**Measurement**	**Difference**	**Pass/Fail**
2/4/2012 6:15	SO_2	S	202.00	201	1.00	Passed
2/5/2012 6:03	SO_2	S	202.00	205	3.00	Passed
2/5/2012 6:03	SO_2	Z	0.00	1	1.00	Passed
2/6/2012 6:04	SO_2	S	202.00	207	5.00	Passed
2/6/2012 6:04	SO_2	Z	0.00	1	1.00	Passed
2/7/2012 6:03	SO_2	S	202.00	194	8.00	Passed
2/7/2012 6:03	SO_2	Z	0.00	0	0.00	Passed
2/8/2012 6:04	SO_2	S	202.00	196	6.00	Passed
2/8/2012 6:04	SO_2	Z	0.00	0	0.00	Passed
2/9/2012 6:03	SO_2	S	202.00	196	6.00	Passed
2/9/2012 6:03	SO_2	Z	0.00	1	1.00	Passed
2/10/2012 6:03	SO_2	S	199.20	196	3.00	Passed
2/10/2012 6:03	SO_2	Z	0.00	1	1.00	Passed
2/11/2012 6:03	SO_2	S	199.20	201	2.00	Passed
2/11/2012 6:03	SO_2	Z	0.00	0	0.00	Passed
2/12/2012 6:04	SO_2	S	199.20	200	1.00	Passed
2/12/2012 6:04	SO_2	Z	0.00	1	1.00	Passed
2/13/2012 6:03	SO_2	S	199.20	196	3.00	Passed
2/13/2012 6:03	SO_2	Z	0.00	0	0.00	Passed
2/14/2012 6:04	SO_2	S	199.20	198	1.00	Passed
2/14/2012 6:04	SO_2	Z	0.00	-1	1.00	Passed
2/15/2012 6:03	SO_2	S	199.20	196	3.00	Passed
2/15/2012 6:03	SO_2	Z	0.00	1	1.00	Passed
2/16/2012 6:04	SO_2	S	199.20	197	2.00	Passed
2/16/2012 6:04	SO_2	Z	0.00	0	0.00	Passed
2/17/2012 6:03	SO_2	S	199.20	198	1.00	Passed
2/17/2012 6:03	SO_2	Z	0.00	0	0.00	Passed
2/18/2012 6:04	SO_2	S	199.20	190	9.00	Passed
2/18/2012 6:04	SO_2	Z	0.00	0	0.00	Passed
2/19/2012 6:03	SO_2	S	199.20	197	2.00	Passed
2/19/2012 6:03	SO_2	Z	0.00	0	0.00	Passed
2/20/2012 6:04	SO_2	S	199.20	197	2.00	Passed
2/20/2012 6:04	SO_2	Z	0.00	0	0.00	Passed
2/21/2012 6:03	SO_2	S	199.20	196	3.00	Passed
2/21/2012 6:03	SO_2	Z	0.00	-1	1.00	Passed
2/22/2012 6:04	SO_2	S	199.20	195	4.00	Passed
2/22/2012 6:04	SO_2	Z	0.00	-1	1.00	Passed
2/23/2012 6:03	SO_2	S	199.20	194	5.00	Passed

Fluid Catalytic Cracking Unit (FCCU) EPN 42CB2201 Daily SO_2 CEMS Drift Tests						
Date/Time	**Component**	**Type**	**Reference**	**Measurement**	**Difference**	**Pass/Fail**
2/23/2012 6:03	SO_2	Z	0.00	0	0.00	Passed
2/23/2012 8:20	SO_2	S	199.20	192	7.00	Passed
2/23/2012 8:20	SO_2	Z	0.00	-1	1.00	Passed
2/24/2012 6:04	SO_2	S	199.20	197	2.00	Passed
2/24/2012 6:04	SO_2	Z	0.00	1	1.00	Passed
2/25/2012 6:03	SO_2	S	199.20	199	0.00	Passed
2/25/2012 6:03	SO_2	Z	0.00	2	2.00	Passed
2/26/2012 6:04	SO_2	S	199.20	199	0.00	Passed
2/26/2012 6:04	SO_2	Z	0.00	0	0.00	Passed
2/27/2012 6:03	SO_2	S	199.20	197	2.00	Passed
2/27/2012 6:03	SO_2	Z	0.00	0	0.00	Passed
2/28/2012 6:04	SO_2	S	199.20	197	2.00	Passed
2/28/2012 6:04	SO_2	Z	0.00	0	0.00	Passed
2/29/2012 6:15	SO_2	S	199.20	196	3.00	Passed
3/1/2012 6:04	SO_2	S	199.20	188	11.00	Passed
3/1/2012 6:04	SO_2	Z	0.00	-1	1.00	Passed
3/1/2012 6:55	SO_2	S	199.20	199	0.00	Passed
3/1/2012 6:55	SO_2	Z	0.00	0	0.00	Passed
3/2/2012 6:03	SO_2	S	199.20	197	2.00	Passed
3/2/2012 6:03	SO_2	Z	0.00	1	1.00	Passed
3/3/2012 6:04	SO_2	S	199.20	199	0.00	Passed
3/3/2012 6:04	SO_2	Z	0.00	0	0.00	Passed
3/4/2012 6:03	SO_2	S	199.20	201	2.00	Passed
3/4/2012 6:03	SO_2	Z	0.00	1	1.00	Passed
3/5/2012 6:04	SO_2	S	199.20	200	1.00	Passed
3/5/2012 6:04	SO_2	Z	0.00	-1	1.00	Passed
3/6/2012 6:03	SO_2	S	199.20	202	3.00	Passed
3/6/2012 6:03	SO_2	Z	0.00	-2	2.00	Passed
3/7/2012 6:04	SO_2	S	199.20	198	1.00	Passed
3/7/2012 6:04	SO_2	Z	0.00	-1	1.00	Passed
3/8/2012 6:03	SO_2	S	199.20	198	1.00	Passed
3/8/2012 6:03	SO_2	Z	0.00	-1	1.00	Passed
3/9/2012 6:04	SO_2	S	199.20	198	1.00	Passed
3/9/2012 6:04	SO_2	Z	0.00	-1	1.00	Passed
3/10/2012 6:03	SO_2	S	199.20	200	1.00	Passed
3/10/2012 6:03	SO_2	Z	0.00	-1	1.00	Passed
3/11/2012 6:04	SO_2	S	199.20	197	2.00	Passed
3/11/2012 6:04	SO_2	Z	0.00	-2	2.00	Passed

Fluid Catalytic Cracking Unit (FCCU) EPN 42CB2201 Daily SO_2 CEMS Drift Tests						
Date/Time	**Component**	**Type**	**Reference**	**Measurement**	**Difference**	**Pass/Fail**
3/12/2012 6:08	SO_2	S	199.20	200	1.00	Passed
3/12/2012 6:08	SO_2	Z	0.00	-2	2.00	Passed
3/13/2012 11:46	SO_2	S	199.20	202	3.00	Passed
3/13/2012 11:46	SO_2	Z	0.00	1	1.00	Passed
3/14/2012 5:03	SO_2	S	199.20	200	1.00	Passed
3/14/2012 5:03	SO_2	Z	0.00	1	1.00	Passed
3/15/2012 5:03	SO_2	S	199.20	201	2.00	Passed
3/15/2012 5:03	SO_2	Z	0.00	0	0.00	Passed
3/16/2012 5:03	SO_2	S	199.20	201	2.00	Passed
3/16/2012 5:03	SO_2	Z	0.00	1	1.00	Passed
3/17/2012 5:03	SO_2	S	199.20	200	1.00	Passed
3/17/2012 5:03	SO_2	Z	0.00	1	1.00	Passed
3/18/2012 5:03	SO_2	S	199.20	201	2.00	Passed
3/18/2012 5:03	SO_2	Z	0.00	1	1.00	Passed
3/19/2012 5:04	SO_2	S	199.20	196	3.00	Passed
3/19/2012 5:04	SO_2	Z	0.00	2	2.00	Passed
3/19/2012 6:08	SO_2	S	199.20	202	3.00	Passed
3/19/2012 6:08	SO_2	Z	0.00	1	1.00	Passed
3/20/2012 5:03	SO_2	S	199.20	201	2.00	Passed
3/20/2012 5:03	SO_2	Z	0.00	0	0.00	Passed
3/21/2012 5:04	SO_2	S	199.20	203	4.00	Passed
3/21/2012 5:04	SO_2	Z	0.00	-1	1.00	Passed
3/22/2012 5:03	SO_2	S	199.20	202	3.00	Passed
3/22/2012 5:03	SO_2	Z	0.00	0	0.00	Passed
3/23/2012 5:03	SO_2	S	199.20	200	1.00	Passed
3/23/2012 5:03	SO_2	Z	0.00	0	0.00	Passed
3/24/2012 5:03	SO_2	S	199.20	203	4.00	Passed
3/24/2012 5:03	SO_2	Z	0.00	-2	2.00	Passed
3/25/2012 5:03	SO_2	S	199.20	200	1.00	Passed
3/25/2012 5:03	SO_2	Z	0.00	-3	3.00	Passed
3/26/2012 5:03	SO_2	S	199.20	200	1.00	Passed
3/26/2012 5:03	SO_2	Z	0.00	-3	3.00	Passed
3/27/2012 5:03	SO_2	S	199.20	199	0.00	Passed
3/27/2012 5:03	SO_2	Z	0.00	-3	3.00	Passed
3/28/2012 5:03	SO_2	S	199.20	200	1.00	Passed
3/28/2012 5:03	SO_2	Z	0.00	-3	3.00	Passed
3/29/2012 5:03	SO_2	S	199.20	198	1.00	Passed
3/29/2012 5:03	SO_2	Z	0.00	-4	4.00	Passed

Fluid Catalytic Cracking Unit (FCCU) EPN 42CB2201 Daily SO_2 CEMS Drift Tests						
Date/Time	**Component**	**Type**	**Reference**	**Measurement**	**Difference**	**Pass/Fail**
3/30/2012 5:03	SO_2	S	199.20	198	1.00	Passed
3/30/2012 5:03	SO_2	Z	0.00	-3	3.00	Passed
3/31/2012 5:03	SO_2	S	199.20	197	2.00	Passed
3/31/2012 5:03	SO_2	Z	0.00	-3	3.00	Passed
4/1/2012 5:03	SO_2	S	199.20	199	0.00	Passed
4/1/2012 5:03	SO_2	Z	0.00	-4	4.00	Passed
4/2/2012 5:03	SO_2	S	199.20	199	0.00	Passed
4/2/2012 5:03	SO_2	Z	0.00	-4	4.00	Passed
4/3/2012 5:03	SO_2	S	199.20	187	12.00	Passed
4/3/2012 5:03	SO_2	Z	0.00	-4	4.00	Passed
4/3/2012 5:49	SO_2	S	199.20	199	0.00	Passed
4/3/2012 5:49	SO_2	Z	0.00	1	1.00	Passed
4/4/2012 5:03	SO_2	S	198.10	199	1.00	Passed
4/4/2012 5:03	SO_2	Z	0.00	1	1.00	Passed
4/5/2012 5:03	SO_2	S	198.10	199	1.00	Passed
4/5/2012 5:03	SO_2	Z	0.00	2	2.00	Passed
4/6/2012 5:03	SO_2	S	198.10	201	3.00	Passed
4/6/2012 5:03	SO_2	Z	0.00	1	1.00	Passed
4/7/2012 5:03	SO_2	S	198.10	200	2.00	Passed
4/7/2012 5:03	SO_2	Z	0.00	1	1.00	Passed
4/8/2012 5:03	SO_2	S	198.10	202	4.00	Passed
4/8/2012 5:03	SO_2	Z	0.00	1	1.00	Passed
4/9/2012 5:03	SO_2	S	198.10	200	2.00	Passed
4/9/2012 5:03	SO_2	Z	0.00	1	1.00	Passed
4/10/2012 5:03	SO_2	S	198.10	200	2.00	Passed
4/10/2012 5:03	SO_2	Z	0.00	1	1.00	Passed
4/11/2012 5:03	SO_2	S	198.10	200	2.00	Passed
4/11/2012 5:03	SO_2	Z	0.00	-1	1.00	Passed
4/12/2012 5:03	SO_2	S	198.10	199	1.00	Passed
4/12/2012 5:03	SO_2	Z	0.00	-1	1.00	Passed
4/13/2012 5:03	SO_2	S	198.10	199	1.00	Passed
4/13/2012 5:03	SO_2	Z	0.00	-1	1.00	Passed
4/14/2012 5:03	SO_2	S	198.10	198	0.00	Passed
4/14/2012 5:03	SO_2	Z	0.00	0	0.00	Passed
4/15/2012 5:03	SO_2	S	198.10	202	4.00	Passed
4/15/2012 5:03	SO_2	Z	0.00	-1	1.00	Passed
4/16/2012 5:03	SO_2	S	198.10	200	2.00	Passed
4/16/2012 5:03	SO_2	Z	0.00	0	0.00	Passed

Fluid Catalytic Cracking Unit (FCCU) EPN 42CB2201 Daily SO_2 CEMS Drift Tests						
Date/Time	**Component**	**Type**	**Reference**	**Measurement**	**Difference**	**Pass/Fail**
4/17/2012 5:03	SO_2	S	198.10	202	4.00	Passed
4/17/2012 5:03	SO_2	Z	0.00	3	3.00	Passed
4/18/2012 5:03	SO_2	S	198.10	207	9.00	Passed
4/18/2012 5:03	SO_2	Z	0.00	5	5.00	Passed
4/19/2012 5:03	SO_2	S	198.10	214	16.00	Passed
4/19/2012 5:03	SO_2	Z	0.00	15	15.00	Passed
4/19/2012 5:53	SO_2	S	198.10	196	2.00	Passed
4/19/2012 5:53	SO_2	Z	0.00	0	0.00	Passed
4/20/2012 5:03	SO_2	S	198.10	202	4.00	Passed
4/20/2012 5:03	SO_2	Z	0.00	6	6.00	Passed
4/21/2012 5:03	SO_2	S	198.10	201	3.00	Passed
4/21/2012 5:03	SO_2	Z	0.00	11	11.00	Passed
4/22/2012 5:03	SO_2	S	198.10	210	12.00	Passed
4/22/2012 5:03	SO_2	Z	0.00	12	12.00	Passed
4/23/2012 5:03	SO_2	S	198.10	211	13.00	Passed
4/23/2012 5:03	SO_2	Z	0.00	13	13.00	Passed
4/23/2012 6:08	SO_2	S	198.10	199	1.00	Passed
4/23/2012 6:08	SO_2	Z	0.00	1	1.00	Passed
4/24/2012 5:03	SO_2	S	198.10	196	2.00	Passed
4/24/2012 5:03	SO_2	Z	0.00	0	0.00	Passed
4/25/2012 5:03	SO_2	S	198.10	195	3.00	Passed
4/25/2012 5:03	SO_2	Z	0.00	-1	1.00	Passed
4/26/2012 5:03	SO_2	S	198.10	199	1.00	Passed
4/26/2012 5:03	SO_2	Z	0.00	2	2.00	Passed
4/27/2012 5:03	SO_2	S	198.10	198	0.00	Passed
4/27/2012 5:03	SO_2	Z	0.00	1	1.00	Passed
4/28/2012 5:03	SO_2	S	198.10	195	3.00	Passed
4/28/2012 5:03	SO_2	Z	0.00	0	0.00	Passed
4/29/2012 5:03	SO_2	S	198.10	195	3.00	Passed
4/29/2012 5:03	SO_2	Z	0.00	-1	1.00	Passed
4/30/2012 5:03	SO_2	S	198.10	194	4.00	Passed
4/30/2012 5:03	SO_2	Z	0.00	-3	3.00	Passed
5/1/2012 5:03	SO_2	S	198.10	196	2.00	Passed
5/1/2012 5:03	SO_2	Z	0.00	-2	2.00	Passed
5/2/2012 5:03	SO_2	S	198.10	202	4.00	Passed
5/2/2012 5:03	SO_2	Z	0.00	6	6.00	Passed
5/3/2012 5:03	SO_2	S	198.10	207	9.00	Passed
5/3/2012 5:03	SO_2	Z	0.00	10	10.00	Passed

Fluid Catalytic Cracking Unit (FCCU) EPN 42CB2201 Daily SO_2 CEMS Drift Tests						
Date/Time	**Component**	**Type**	**Reference**	**Measurement**	**Difference**	**Pass/Fail**
5/4/2012 5:03	SO_2	S	198.10	209	11.00	Passed
5/4/2012 5:03	SO_2	Z	0.00	12	12.00	Passed
5/5/2012 5:03	SO_2	S	198.10	208	10.00	Passed
5/5/2012 5:03	SO_2	Z	0.00	1	1.00	Passed
5/6/2012 5:03	SO_2	S	198.10	207	9.00	Passed
5/6/2012 5:03	SO_2	Z	0.00	3	3.00	Passed
5/7/2012 5:03	SO_2	S	198.10	208	10.00	Passed
5/7/2012 5:03	SO_2	Z	0.00	4	4.00	Passed
5/8/2012 5:03	SO_2	S	198.10	207	9.00	Passed
5/8/2012 5:03	SO_2	Z	0.00	4	4.00	Passed
5/9/2012 5:03	SO_2	S	198.10	202	4.00	Passed
5/9/2012 5:03	SO_2	Z	0.00	1	1.00	Passed
5/10/2012 5:03	SO_2	S	198.10	202	4.00	Passed
5/10/2012 5:03	SO_2	Z	0.00	1	1.00	Passed
5/11/2012 5:03	SO_2	S	198.10	200	2.00	Passed
5/11/2012 5:03	SO_2	Z	0.00	1	1.00	Passed
5/12/2012 5:03	SO_2	S	198.10	204	6.00	Passed
5/12/2012 5:03	SO_2	Z	0.00	2	2.00	Passed
5/13/2012 5:03	SO_2	S	198.10	203	5.00	Passed
5/13/2012 5:03	SO_2	Z	0.00	1	1.00	Passed
5/14/2012 5:03	SO_2	S	198.10	202	4.00	Passed
5/14/2012 5:03	SO_2	Z	0.00	0	0.00	Passed
5/15/2012 5:03	SO_2	S	198.10	202	4.00	Passed
5/15/2012 5:03	SO_2	Z	0.00	0	0.00	Passed
5/16/2012 5:03	SO_2	S	198.10	203	5.00	Passed
5/16/2012 5:03	SO_2	Z	0.00	0	0.00	Passed
5/17/2012 5:03	SO_2	S	198.10	205	7.00	Passed
5/17/2012 5:03	SO_2	Z	0.00	2	2.00	Passed
5/18/2012 5:03	SO_2	S	198.10	205	7.00	Passed
5/18/2012 5:03	SO_2	Z	0.00	3	3.00	Passed
5/19/2012 5:03	SO_2	S	198.10	204	6.00	Passed
5/19/2012 5:03	SO_2	Z	0.00	3	3.00	Passed
5/20/2012 5:03	SO_2	S	198.10	205	7.00	Passed
5/20/2012 5:03	SO_2	Z	0.00	1	1.00	Passed
5/21/2012 5:03	SO_2	S	198.10	205	7.00	Passed
5/21/2012 5:03	SO_2	Z	0.00	2	2.00	Passed
5/22/2012 5:03	SO_2	S	198.40	202	4.00	Passed
5/22/2012 5:03	SO_2	Z	0.00	0	0.00	Passed

Fluid Catalytic Cracking Unit (FCCU) EPN 42CB2201 Daily SO_2 CEMS Drift Tests						
Date/Time	**Component**	**Type**	**Reference**	**Measurement**	**Difference**	**Pass/Fail**
5/23/2012 5:03	SO_2	S	198.40	200	2.00	Passed
5/23/2012 5:03	SO_2	Z	0.00	-2	2.00	Passed
5/24/2012 5:03	SO_2	S	198.40	198	0.00	Passed
5/24/2012 5:03	SO_2	Z	0.00	-1	1.00	Passed
5/25/2012 5:03	SO_2	S	198.40	197	1.00	Passed
5/25/2012 5:03	SO_2	Z	0.00	-3	3.00	Passed
5/26/2012 5:03	SO_2	S	198.40	196	2.00	Passed
5/26/2012 5:03	SO_2	Z	0.00	-6	6.00	Passed
5/27/2012 5:03	SO_2	S	198.40	197	1.00	Passed
5/27/2012 5:03	SO_2	Z	0.00	-2	2.00	Passed
5/28/2012 5:03	SO_2	S	198.40	200	2.00	Passed
5/28/2012 5:03	SO_2	Z	0.00	-1	1.00	Passed
5/29/2012 5:03	SO_2	S	198.40	200	2.00	Passed
5/29/2012 5:03	SO_2	Z	0.00	-2	2.00	Passed
5/30/2012 5:03	SO_2	S	198.40	199	1.00	Passed
5/30/2012 5:03	SO_2	Z	0.00	-2	2.00	Passed
5/31/2012 5:03	SO_2	S	198.40	196	2.00	Passed
5/31/2012 5:03	SO_2	Z	0.00	-4	4.00	Passed
6/1/2012 5:03	SO_2	S	198.40	199	1.00	Passed
6/1/2012 5:03	SO_2	Z	0.00	-2	2.00	Passed
6/2/2012 5:03	SO_2	S	198.40	203	5.00	Passed
6/2/2012 5:03	SO_2	Z	0.00	0	0.00	Passed
6/3/2012 5:03	SO_2	S	198.40	201	3.00	Passed
6/3/2012 5:03	SO_2	Z	0.00	0	0.00	Passed
6/4/2012 5:03	SO_2	S	198.40	206	8.00	Passed
6/4/2012 5:03	SO_2	Z	0.00	3	3.00	Passed
6/5/2012 5:03	SO_2	S	198.40	208	10.00	Passed
6/5/2012 5:03	SO_2	Z	0.00	6	6.00	Passed
6/6/2012 5:03	SO_2	S	198.40	213	15.00	Passed
6/6/2012 5:03	SO_2	Z	0.00	11	11.00	Passed
6/6/2012 6:53	SO_2	S	198.40	203	5.00	Passed
6/6/2012 6:53	SO_2	Z	0.00	0	0.00	Passed
6/7/2012 5:03	SO_2	S	198.40	202	4.00	Passed
6/7/2012 5:03	SO_2	Z	0.00	0	0.00	Passed
6/8/2012 5:03	SO_2	S	198.40	203	5.00	Passed
6/8/2012 5:03	SO_2	Z	0.00	0	0.00	Passed
6/9/2012 5:03	SO_2	S	198.40	208	10.00	Passed
6/9/2012 5:03	SO_2	Z	0.00	6	6.00	Passed

Fluid Catalytic Cracking Unit (FCCU) EPN 42CB2201 Daily SO_2 CEMS Drift Tests						
Date/Time	**Component**	**Type**	**Reference**	**Measurement**	**Difference**	**Pass/Fail**
6/10/2012 5:04	SO_2	S	198.40	213	15.00	Passed
6/10/2012 5:04	SO_2	Z	0.00	9	9.00	Passed
6/10/2012 7:41	SO_2	S	198.40	197	1.00	Passed
6/10/2012 7:41	SO_2	Z	0.00	1	1.00	Passed
6/11/2012 5:03	SO_2	S	198.40	201	3.00	Passed
6/11/2012 5:03	SO_2	Z	0.00	2	2.00	Passed
6/12/2012 5:04	SO_2	S	198.40	201	3.00	Passed
6/12/2012 5:04	SO_2	Z	0.00	2	2.00	Passed
6/13/2012 5:03	SO_2	S	198.40	189	9.00	Passed
6/13/2012 5:03	SO_2	Z	0.00	1	1.00	Passed
6/14/2012 5:04	SO_2	S	198.40	200	2.00	Passed
6/14/2012 5:04	SO_2	Z	0.00	3	3.00	Passed
6/15/2012 5:03	SO_2	S	198.40	198	0.00	Passed
6/15/2012 5:03	SO_2	Z	0.00	3	3.00	Passed
6/16/2012 5:03	SO_2	S	198.40	200	2.00	Passed
6/16/2012 5:03	SO_2	Z	0.00	1	1.00	Passed
6/17/2012 5:03	SO_2	S	198.40	199	1.00	Passed
6/17/2012 5:03	SO_2	Z	0.00	1	1.00	Passed
6/18/2012 5:04	SO_2	S	198.40	198	0.00	Passed
6/18/2012 5:04	SO_2	Z	0.00	1	1.00	Passed
6/19/2012 5:03	SO_2	S	198.40	201	3.00	Passed
6/19/2012 5:03	SO_2	Z	0.00	4	4.00	Passed
6/20/2012 5:04	SO_2	S	198.40	203	5.00	Passed
6/20/2012 5:04	SO_2	Z	0.00	5	5.00	Passed
6/21/2012 5:03	SO_2	S	198.40	203	5.00	Passed
6/21/2012 5:03	SO_2	Z	0.00	6	6.00	Passed
6/21/2012 11:11	SO_2	S	198.40	199	1.00	Passed
6/21/2012 11:11	SO_2	Z	0.00	0	0.00	Passed
6/22/2012 5:04	SO_2	S	198.40	199	1.00	Passed
6/22/2012 5:04	SO_2	Z	0.00	1	1.00	Passed
6/23/2012 5:03	SO_2	S	198.40	199	1.00	Passed
6/23/2012 5:03	SO_2	Z	0.00	0	0.00	Passed
6/24/2012 5:04	SO_2	S	198.40	196	2.00	Passed
6/24/2012 5:04	SO_2	Z	0.00	-2	2.00	Passed
6/25/2012 5:03	SO_2	S	198.40	197	1.00	Passed
6/25/2012 5:03	SO_2	Z	0.00	-1	1.00	Passed
6/26/2012 5:04	SO_2	S	198.40	195	3.00	Passed
6/26/2012 5:04	SO_2	Z	0.00	-2	2.00	Passed

Fluid Catalytic Cracking Unit (FCCU) EPN 42CB2201 Daily SO_2 CEMS Drift Tests						
Date/Time	**Component**	**Type**	**Reference**	**Measurement**	**Difference**	**Pass/Fail**
6/27/2012 5:03	SO_2	S	198.40	196	2.00	Passed
6/27/2012 5:03	SO_2	Z	0.00	-1	1.00	Passed
6/28/2012 5:04	SO_2	S	198.40	196	2.00	Passed
6/28/2012 5:04	SO_2	Z	0.00	-3	3.00	Passed
6/29/2012 5:03	SO_2	S	198.40	194	4.00	Passed
6/29/2012 5:03	SO_2	Z	0.00	-5	5.00	Passed
6/30/2012 5:04	SO_2	S	198.40	194	4.00	Passed
6/30/2012 5:04	SO_2	Z	0.00	-6	6.00	Passed

Appendix E

NSR Permit Reports

1st Half of 2012 Atmospheric Heater NO_X Analyzer Summary Report

POLLUTANT NO_X **EMISSION POINT NUMBER:** 23BC201

REPORTING PERIOD DATES **From:** 1/1/2012 **To:** 6/30/2012

COMPANY:	Valero Refining - Texas, L.P. 9701 Manchester Street Houston, Texas 77012	
UNIT ID:	23BC201	
PROCESS UNIT:	Crude Unit Atmospheric Tower Heater	
TYPE OF REQUIREMENT:	NSR Permit	
MONITORING REQUIREMENT:	NSR Permit No. Special Condition No. 16	
REPORT REQUIRED BY:	NSPS Appendix B, Perfromance Specification 2, Section 8.5. NSPS Appendix F, Procedure 1, Section 7	
MONITOR MANUFACTURER & MODEL NO:	TECO 42C-HL (HIGH SOURCE)	
DATE OF LAST CEMS CERTIFICATION OR AUDIT:	5/29/2012	CGA
PROCESS UNIT DESCRIPTION	Crude Unit Heater	
OPERATING HOURS IN PERIOD	4,368	hours

CEMS PERFORMANCE SUMMARY

1. CEMS Downtime (hours) in Reporting Period Due To:

a) Monitor Equipment Malfunctions	0.0	
b) Non-Monitor Equipment Malfunctions	0.0	
c) Quality Assurance Calibrations	6.0	
d) Other Known Causes	5.0	
e) Unknown Causes	0.0	
2. Total CEMS Downtime	11.0	hours
3. Percent Downtime	0.3	%

The following summary details the magnitude and duration of monitor downtime at the Atmospheric Heater NO_X CEMS
1st Semiannual Period of 2012

1st Half of 2012 Atmospheric Heater NO_X Analyzer Downtime Summary

Event	Start Date/Time	End Date/Time	Duration, Hrs.	Downtime Description	Corrective Action
1H12-AHTR NOX-001	1/2/12 8:30 AM	1/2/12 9:00 AM	1.00	Exceeded two times the O2 calibration drift.	Calibrated and returned to service.
1H12-AHTR NOX-002	1/12/12 7:00 AM	1/12/12 7:30 AM	1.00	Exceeded four times the calibration drift.	Calibration gas out, due to leak in the tube.
1H12-AHTR NOX-003	2/25/12 8:00 AM	2/25/12 9:00 AM	1.00	Exceeded two times the O2 calibration drift.	Re-calibrate.
1H12-AHTR NOX-004	3/4/12 7:00 AM	3/4/12 7:20 AM	1.00	Exceeded two times the O2 calibration drift.	Re-calibrate.
1H12-AHTR NOX-005	3/23/12 6:46 AM	3/23/12 9:51 AM	4.00	Quarterly CGA	N/A
1H12-AHTR NOX-006	4/8/12 8:03 AM	4/8/12 8:30 AM	1.00	Exceeded two times the O2 span.	Re-calibrate.
1H12-AHTR NOX-007	5/29/12 12:00 PM	5/29/12 2:00 PM	2.00	Performed quarterly CGA.	N/A
		Total Hours of Downtime	11.0		
		Total Operating Hours for the Quarter	4,368		
		Percent Excess Emissions %	0.3%		

1st Half of 2012 Package Boiler No. 1 NO_X Analyzer Summary Report

POLLUTANT NO_X **EMISSION POINT NUMBER:** 81BF01

REPORTING PERIOD DATES **From:** 1/1/2012 **To:** 6/30/2012

COMPANY:	Valero Refining - Texas, L.P. 9701 Manchester Street Houston, Texas 77012
UNIT ID:	81BF01
PROCESS UNIT:	Package Boiler No. 1
EMISSIONS LIMITATION REQUIRED BY:	Permit No. 19637, Special Condition No. 6.
EMISSIONS LIMITATION:	0.01 lb/MMBtu on a 30-day rolling average
TYPE OF REQUIREMENT:	Standard
MONITORING REQUIREMENT:	Permit No. 19637, Special Condition No. 15.
FREQUENCY:	30-day rolling average
REPORT REQUIRED BY:	Permit No. 19637, Special Condition No. 24.
MONITOR MANUFACTURER & MODEL NO:	TECO 42C LOW SOURCE
DATE OF LAST CEMS CERTIFICATION OR AUDIT:	5/30/2012 CGA
PROCESS UNIT DESCRIPTION	Package Boiler
OPERATING HOURS IN PERIOD	4,268 hours

EMISSIONS DATA SUMMARY

1. Duration of Excess Emission (hours) in Reporting Period Due To:

	0.01 lb/MMBtu on a 30-day rolling average
a) Startup/Shutdown	0.0
b) Control Equipment Problems	0.0
c) Process Problems	0.0
d) Other Known Causes	0.0
e) Unknown Causes	0.0

2. Total Duration of Excess Emissions 0.0 hours

3. Percent Excess Emissions 0.0 %

CEMS PERFORMANCE SUMMARY

1. CEMS Downtime (hours) in Reporting Period Due To:

a) Monitor Equipment Malfunctions	0.0
b) Non-Monitor Equipment Malfunctions	5.0
c) Quality Assurance Calibrations	1.0
d) Other Known Causes	12.0
e) Unknown Causes	0.0

2. Total CEMS Downtime 18.0 hours

3. Percent Downtime 0.4 %

1st Half of 2012 Package Boiler No. 1 CO Analyzer Summary Report

POLLUTANT CO **EMISSION POINT NUMBER:** 81BF01

REPORTING PERIOD DATES **From:** 1/1/2012 **To:** 6/30/2012

COMPANY:	Valero Refining - Texas, L.P. 9701 Manchester Street Houston, Texas 77012
UNIT ID:	81BF01
PROCESS UNIT:	Package Boiler No. 1
EMISSIONS LIMITATION REQUIRED BY:	Permit No. 19637, Special Condition No. 6.
EMISSIONS LIMITATION:	0.035 lb/MMBtu on a 30-day rolling average
TYPE OF REQUIREMENT:	Standard
MONITORING REQUIREMENT:	Permit No. 19637, Special Condition No. 15.
FREQUENCY:	30-day rolling average
REPORT REQUIRED BY:	Permit No. 19637, Special Condition No. 24.
MONITOR MANUFACTURER & MODEL NO:	TECO 48C
DATE OF LAST CEMS CERTIFICATION OR AUDIT:	5/30/2012 CGA
PROCESS UNIT DESCRIPTION	Package Boiler
OPERATING HOURS IN PERIOD	4,268 hours

EMISSIONS DATA SUMMARY

1. Duration of Excess Emission (hours) in Reporting Period Due To:

	0.035 lb/MMBtu on a 30-day rolling average
a) Startup/Shutdown	0.0
b) Control Equipment Problems	0.0
c) Process Problems	0.0
d) Other Known Causes	0.0
e) Unknown Causes	0.0

2. Total Duration of Excess Emissions 0.0 hours

3. Percent Excess Emissions 0.0 %

CEMS PERFORMANCE SUMMARY

1. CEMS Downtime (hours) in Reporting Period Due To:

a) Monitor Equipment Malfunctions	0.0
b) Non-Monitor Equipment Malfunctions	3.0
c) Quality Assurance Calibrations	2.0
d) Other Known Causes	10.0
e) Unknown Causes	0.0

2. Total CEMS Downtime 15.0 hours

3. Percent Downtime 0.4 %

The following summary details the magnitude and duration of monitor downtime at the Package Boiler No. 1 CO CEMS.

1st Half of 2012

1st Half of 2012 Package Boiler No. 1 CO Analyzer Downtime Summary

Event	Start Date/Time	End Date/Time	Duration, Hrs.	Downtime Description	Corrective Action
1H12-052	1/2/12 7:05	1/2/12 7:20	1.00	Exceeded two times the O2 calibration drift.	Calibrated and returned to service.
1H12-053	1/13/12 7:35	1/13/12 7:55	1.00	Exceeded two times the O2 calibration drift.	Calibrate O2.
1H12-054	2/5/12 7:30	2/5/12 8:30	2.00	Downtime realted to O2 four times exceedance of the calibration drift.	Checked flows, calibrated O2 sensor, calibrated analog output card, and performed another validation.
1H12-055	2/9/12 8:20	2/9/12 8:35	1.00	Check new gas bottles.	Calibrate
1H12-056	3/22/12 10:03	3/22/12 10:55	1.00	CGA	N/A
1H12-057	3/26/12 6:50	3/26/12 8:40	2.00	Preventive mainteance.	Water wash sample line.
1H12-058	3/27/12 8:40	3/27/12 9:20	2.00	Preventive maintenance.	Replaced glass vessel.
1H12-059	4/23/12 7:00	4/23/12 8:00	1.00	Changed CO/NOX bottle	Check calibration gas.
1H12-060	5/29/12 8:30	5/29/12 10:14	3.00	Plugged sample line.	Steam sampleline and install large sample pump.
1H12-061	5/30/12 9:00	5/30/12 10:00	1.00	Performed quarterly CGA.	N/A
		Total Hours of Downtime	15.00		
		Total Operating Hours for the Quarter	4,268		
		Period of Downtime, %	0.4%		

The following summary details the magnitude and duration of monitor downtime at the Package Boiler No. 1 O_2 CEMS.

1st Half of 2012

1st Half of 2012 Package Boiler No. 1 O_2 Analyzer Downtime Summary

Event	Start Date/Time	End Date/Time	Duration, Hrs.	Downtime Description	Corrective Action
1H12-052	1/2/12 7:05	1/2/12 7:20	1.00	Exceeded two times the O2 calibration drift.	Calibrated and returned to service.
1H12-053	1/13/12 7:35	1/13/12 7:55	1.00	Exceeded two times the O2 calibration drift.	Calibrate O2.
1H12-054	2/5/12 7:30	2/5/12 8:30	26.00	Exceeded four times the calibration drift.	Checked flows, calibrated O2 sensor, calibrated analog output card, and performed another validation.
1H12-055	2/9/12 8:20	2/9/12 8:35	1.00	Check new gas bottles.	Calibrate
1H12-056	3/22/12 10:03	3/22/12 10:55	1.00	CGA	N/A
1H12-057	3/26/12 6:50	3/26/12 8:40	2.00	Preventive mainteance on sample system.	Water wash sample line.
1H12-058	3/27/12 8:40	3/27/12 9:20	2.00	Preventive maintenance.	Replaced glass vessel.
1H12-059	4/23/12 7:00	4/23/12 8:00	1.00	Changed CO/NOX bottle	Check calibration gas.
1H12-060	5/29/12 8:30	5/29/12 10:14	3.00	Plugged sample line.	Steam sampleline and install large sample pump.
1H12-061	5/30/12 9:00	5/30/12 10:00	1.00	Performed quarterly CGA.	N/A
		Total Hours of Downtime	39.00		
		Total Operating Hours for the Quarter	4,268		
		Period of Downtime, %	0.9%		

1st Half of 2012 Package Boiler No. 2 NO_X Analyzer Summary Report

POLLUTANT NO_X **EMISSION POINT NUMBER:** 50BF02

REPORTING PERIOD DATES **From:** 1/1/2012 **To:** 6/30/2012

COMPANY:	Valero Refining - Texas, L.P. 9701 Manchester Street Houston, Texas 77012
UNIT ID:	50BF02
PROCESS UNIT:	Package Boiler No. 2
EMISSIONS LIMITATION REQUIRED BY:	Permit No. 19637, Special Condition No. 6.
EMISSIONS LIMITATION:	0.01 lb/MMBtu on a 30-day rolling average
TYPE OF REQUIREMENT:	Standard
MONITORING REQUIREMENT:	Permit No. 19637, Special Condition No. 15.
FREQUENCY:	30-day rolling average
REPORT REQUIRED BY:	Permit No. 19637, Special Condition No. 24
MONITOR MANUFACTURER & MODEL NO:	TECO 42C LOW SOURCE
DATE OF LAST CEMS CERTIFICATION OR AUDIT:	5/31/2012 CGA
PROCESS UNIT DESCRIPTION	Package Boiler
OPERATING HOURS IN PERIOD	2,730 hours

EMISSIONS DATA SUMMARY

1. Duration of Excess Emission (hours) in Reporting Period Due To:

	0.01 lb/MMBtu on a 30-day rolling average
a) Startup/Shutdown	17.0
b) Control Equipment Problems	0.0
c) Process Problems	0.0
d) Other Known Causes	0.0
e) Unknown Causes	0.0

2. Total Duration of Excess Emissions 17.0 hours

3. Percent Excess Emissions 0.6 %

CEMS PERFORMANCE SUMMARY

1. CEMS Downtime (hours) in Reporting Period Due To:

a) Monitor Equipment Malfunctions	0.0
b) Non-Monitor Equipment Malfunctions	0.0
c) Quality Assurance Calibrations	2.0
d) Other Known Causes	61.0
e) Unknown Causes	0.0

2. Total CEMS Downtime 63.0 hours

3. Percent Downtime 2.3 %

1st Half of 2012 Package Boiler No. 2 CO Analyzer Summary Report

POLLUTANT CO **EMISSION POINT NUMBER:** 50BF02

REPORTING PERIOD DATES **From:** 1/1/2012 **To:** 6/30/2012

COMPANY:	Valero Refining - Texas, L.P. 9701 Manchester Street Houston, Texas 77012
UNIT ID:	50BF02
PROCESS UNIT:	Package Boiler No. 2
EMISSIONS LIMITATION REQUIRED BY:	Permit No. 19637, Special Condition No. 6
EMISSIONS LIMITATION:	0.035 lb/MMBtu on a 30-day rolling average
TYPE OF REQUIREMENT:	Standard
MONITORING REQUIREMENT:	Permit No. 19637, Special Condition No. 15.
FREQUENCY:	30-day rolling average
REPORT REQUIRED BY:	Permit No. 19637, Special Condition No. 24.
MONITOR MANUFACTURER & MODEL NO:	TECO 48C
DATE OF LAST CEMS CERTIFICATION OR AUDIT:	5/31/2012 CGA
PROCESS UNIT DESCRIPTION	Package Boiler
OPERATING HOURS IN PERIOD	2,730 hours

EMISSIONS DATA SUMMARY

1. Duration of Excess Emission (hours) in Reporting Period Due To:

	0.035 lb/MMBtu on a 30-day rolling averag
a) Startup/Shutdown	38.0
b) Control Equipment Problems	0.0
c) Process Problems	0.0
d) Other Known Causes	0.0
e) Unknown Causes	0.0

2. Total Duration of Excess Emissions 38.0 hours

3. Percent Excess Emissions 1.4 %

CEMS PERFORMANCE SUMMARY

1. CEMS Downtime (hours) in Reporting Period Due To:

a) Monitor Equipment Malfunctions	0.0
b) Non-Monitor Equipment Malfunctions	0.0
c) Quality Assurance Calibrations	2.0
d) Other Known Causes	16.0
e) Unknown Causes	0.0

2. Total CEMS Downtime 18.0 hours

3. Percent Downtime 0.7 %

The following summary details the magnitude and duration of monitor downtime at the Package Boiler No. 2 CO CEMS.

1st Half of 2012

1st Half of 2012 Package Boiler No. 2 CO Analyzer Downtime Summary

Event	Start Date/Time	End Date/Time	Duration, Hrs.	Downtime Description	Corrective Action
	1/2/12 6:45	1/2/12 6:58	1.00	Exceeded two times the O2 calibration drift.	Calibrated and returned to service.
	3/20/12 7:00	3/20/12 7:57	1.00	Due to the NOX analyzer repairs, an additional calibration and validation was run.	Replaced NOX analyzer pump and recalibrated, also re-ran the validation.
	3/21/12 6:15	3/22/12 6:30	1.00	Exceed four times the NOX calibration drift.	Re-calibrated.
	3/22/12 12:16	3/22/12 13:10	1.00	CGA	N/A
	3/26/12 9:45	3/26/12 11:00	2.00	Preventive mainteance on sample system.	Cleaned sample system and replaced sample filters and sample pump, ran validation after maintenance.
	5/6/12 4:00	5/6/12 10:00	6.00	Analyzer reading high CO.	Investigated and discovered that the back pressure vent header causing analyzer to reads higher. Installed temporary header and
	5/8/12 6:37	5/8/12 7:25	2.00	Exceeded two times the CO span.	Calibrate analyzer set flows and re-run validation.
	5/31/12 7:54	5/31/12 8:54	1.00	Performed quarterly CGA.	N/A
	6/23/12 6:00	6/23/12 9:05	3.00	Exceeded two times the calibration drift.	Replaced bad solenoid valve inside flow drawer and re-ran the validation.
		Total Hours of Downtime	18.00		
		Total Operating Hours for the Quarter	2,730		
		Period of Downtime, %	0.7%		

The following summary details the magnitude and duration of monitor downtime at the Package Boiler No. 2 O_2 CEMS.

1st Half of 2012

1st Half of 2012 Package Boiler No. 2 O_2 Analyzer Downtime Summary

Event	Start Date/Time	End Date/Time	Duration, Hrs.	Downtime Description	Corrective Action
	1/2/12 6:45	1/2/12 6:58	1.00	Exceeded two times the O2 calibration drift.	Calibrated and returned to service.
	3/20/12 7:00	3/20/12 7:57	1.00	Exceeded two times the O2 calibration drift.	Calibrated the O2 span and re-ran the validation.
	3/21/12 6:15	3/22/12 6:30	1.00	Exceed four times the NOX calibration drift.	Re-calibrated.
	3/22/12 12:16	3/22/12 13:10	1.00	CGA	N/A
	3/26/12 9:45	3/26/12 11:00	2.00	Preventive mainteance on sample system.	Cleaned sample system and replaced sample filters and sample pump, ran validation after maintenance.
	5/7/12 7:15	5/7/12 8:15	2.00	Needed to unplug analyzer vent tubing line to atmosperic vent header.	Unplugged tubing line and re-ran a validation.
	5/8/12 6:37	5/8/12 7:25	2.00	Exceeded two times the CO span.	Calibrate analyzer set flows and re-run validation.
	5/31/12 7:54	5/31/12 8:54	1.00	Performed quarterly CGA.	N/A
	6/22/12 6:00	6/23/12 9:05	27.00	Exceeded four times the calibration drift.	Replaced bad solenoid valve inside flow drawer and re-ran the validation.
Total Hours of Downtime			38.00		
Total Operating Hours for the Quarter			2,730		
Period of Downtime, %			1.4%		

1st Half of 2012 Package Boiler No. 2 NO_X Analyzer Summary Report

POLLUTANT NO_X **EMISSION POINT NUMBER:** 50BF03

REPORTING PERIOD DATES **From:** 1/1/2012 **To:** 6/30/2012

COMPANY:	Valero Refining - Texas, L.P. 9701 Manchester Street Houston, Texas 77012
UNIT ID:	50BF03
PROCESS UNIT:	Package Boiler No. 3
EMISSIONS LIMITATION REQUIRED BY:	Permit No. 19637, Special Condition No. 6
EMISSIONS LIMITATION:	0.01 lb/MMBtu on a 30-day rolling average
TYPE OF REQUIREMENT:	Standard
MONITORING REQUIREMENT:	Permit No. 19637, Special Condition No. 15
FREQUENCY:	30-day rolling average
REPORT REQUIRED BY:	Permit No. 19637, Special Condition No. 24
MONITOR MANUFACTURER & MODEL NO:	TECO 42C LOW SOURCE
DATE OF LAST CEMS CERTIFICATION OR AUDIT:	5/31/2012 CGA
PROCESS UNIT DESCRIPTION	Package Boiler
OPERATING HOURS IN PERIOD	4,283 hours

EMISSIONS DATA SUMMARY

1. Duration of Excess Emission (hours) in Reporting Period Due To:

	0.01 lb/MMBtu on a 30-day rolling averag
a) Startup/Shutdown	0.0
b) Control Equipment Problems	0.0
c) Process Problems	0.0
d) Other Known Causes	0.0
e) Unknown Causes	0.0

2. Total Duration of Excess Emissions 0.0 hours

3. Percent Excess Emissions 0.0 %

CEMS PERFORMANCE SUMMARY

1. CEMS Downtime (hours) in Reporting Period Due To:

a) Monitor Equipment Malfunctions	0.0
b) Non-Monitor Equipment Malfunctions	0.0
c) Quality Assurance Calibrations	3.0
d) Other Known Causes	7.0
e) Unknown Causes	0.0

2. Total CEMS Downtime 10.0 hours

3. Percent Downtime 0.2 %

1st Half of 2012 Package Boiler No. 2 CO Analyzer Summary Report

POLLUTANT CO **EMISSION POINT NUMBER:** 50BF03

REPORTING PERIOD DATES **From:** 1/1/2012 **To:** 6/30/2012

COMPANY:	Valero Refining - Texas, L.P. 9701 Manchester Street Houston, Texas 77012
UNIT ID:	50BF03
PROCESS UNIT:	Package Boiler No. 3
EMISSIONS LIMITATION REQUIRED BY:	Permit No. 19637, Special Condition No. 6
EMISSIONS LIMITATION:	0.035 lb/MMBtu on a 30-day rolling average
TYPE OF REQUIREMENT:	Standard
MONITORING REQUIREMENT:	Permit No. 19637, Special Condition No. 15
FREQUENCY:	30-day rolling average
REPORT REQUIRED BY:	Permit No. 19637, Special Condition No. 24
MONITOR MANUFACTURER & MODEL NO	TECO 48C
DATE OF LAST CEMS CERTIFICATION OR	5/31/2012 CGA
PROCESS UNIT DESCRIPTION	Package Boiler
OPERATING HOURS IN PERIOD	4,283 hours

EMISSIONS DATA SUMMARY

1. Duration of Excess Emission (hours) in Reporting Period Due To:

	0.035 lb/MMBtu on a 30-day rolling averag
a) Startup/Shutdown	31.0
b) Control Equipment Problems	0.0
c) Process Problems	0.0
d) Other Known Causes	0.0
e) Unknown Causes	0.0

2. Total Duration of Excess Emissions 31.0 hours

3. Percent Excess Emissions 0.7 %

CEMS PERFORMANCE SUMMARY

1. CEMS Downtime (hours) in Reporting Period Due To:

a) Monitor Equipment Malfunctions	0.0
b) Non-Monitor Equipment Malfunctions	0.0
c) Quality Assurance Calibrations	3.0
d) Other Known Causes	7.0
e) Unknown Causes	0.0

2. Total CEMS Downtime 10.0 hours

3. Percent Downtime 0.2 %

The following summary details the magnitude and duration of monitor downtime at the Package Boiler No. 3 CO CEMS.

1st Half of 2012

1st Half of 2012 Package Boiler No. 3 CO Analyzer Downtime Summary

Event	Start Date/Time	End Date/Time	Duration, Hrs.	Downtime Description	Corrective Action
1H12-071	1/2/12 6:45	1/2/12 6:58	1.00	Exceeded two times the O2 calibration drift.	Calibrated and returned to service.
1H12-072	2/8/12 10:00	2/8/12 10:25	1.00	Change out dirty sample filter and install new full gas cylinders.	Ran validation sequence after maintenance completed.
1H12-073	3/22/12 13:10	3/22/12 14:00	1.00	CGA	N/A
1H12-074	5/7/12 7:15	5/7/12 8:15	2.00	Needed to unplug analyzer vent tubing line to atmosperic vent header.	Unplugged tubing line and re-ran a validation.
1H12-075	5/8/12 7:15	5/8/12 9:15	3.00	Calibrate analyzer and set flows.	Re-ran validation after calibration and setting flows.
1H12-076	5/31/12 9:45	5/31/12 10:30	2.00	Performed quarterly CGA.	N/A
		Total Hours of Downtime	10.00		
		Total Operating Hours for the Quarter	2,730		
		Period of Downtime, %	0.4%		

The following summary details the magnitude and duration of monitor downtime at the Package Boiler No. 3 O_2 CEMS.

1st Half of 2012

1st Half of 2012 Package Boiler No. 3 CO Analyzer Downtime Summary

Event	Start Date/Time	End Date/Time	Duration, Hrs.	Downtime Description	Corrective Action
1H12-071	1/2/12 6:45	1/2/12 6:58	1.00	Exceeded two times the O2 calibration drift.	Calibrated and returned to service.
1H12-072	2/8/12 10:00	2/8/12 10:25	1.00	Change out dirty sample filter and install new full gas cylinders.	Ran validation sequence after maintenance completed.
1H12-073	3/22/12 13:10	3/22/12 14:00	1.00	CGA	N/A
1H12-074	5/8/12 7:15	5/8/12 9:15	3.00	Calibrate analyzer and set flows.	Re-ran validation after calibration and setting flows.
1H12-075	5/31/12 9:45	5/31/12 10:30	2.00	Performed quarterly CGA.	N/A
		Total Hours of Downtime	8.00		
		Total Operating Hours for the Quarter	2,730		
		Period of Downtime, %	0.3%		

Fluid Catalytic Cracking Unit (FCCU) EPN 42CB2201 Daily SO_2 and NO_X CEMS Drift Tests						
Date/Time	**Component**	**Type**	**Reference**	**Measurement**	**Difference**	**Pass/Fail**
1/1/2012 6:05	SO_2	S	202.00	208	6.00	Passed
1/1/2012 6:05	SO_2	Z	0.00	7	7.00	Passed
1/2/2012 6:04	SO_2	S	202.00	216	14.00	Passed
1/2/2012 6:04	SO_2	Z	0.00	9	9.00	Passed
1/2/2012 8:26	SO_2	S	202.00	204	2.00	Passed
1/2/2012 8:26	SO_2	Z	0.00	8	8.00	Passed
1/3/2012 6:05	SO_2	S	202.00	202	0.00	Passed
1/3/2012 6:05	SO_2	Z	0.00	8	8.00	Passed
1/4/2012 6:04	SO_2	S	202.00	198	4.00	Passed
1/4/2012 6:04	SO_2	Z	0.00	8	8.00	Passed
1/5/2012 6:05	SO_2	S	202.00	197	5.00	Passed
1/5/2012 6:05	SO_2	Z	0.00	4	4.00	Passed
1/5/2012 14:10	SO_2	S	202.00	197	5.00	Passed
1/5/2012 14:10	SO_2	Z	0.00	3	3.00	Passed
1/6/2012 6:03	SO_2	S	202.00	192	10.00	Passed
1/6/2012 6:03	SO_2	Z	0.00	0	0.00	Passed
1/7/2012 6:03	SO_2	S	202.00	200	2.00	Passed
1/7/2012 6:03	SO_2	Z	0.00	-4	4.00	Passed
1/8/2012 6:03	SO_2	S	202.00	200	2.00	Passed
1/8/2012 6:03	SO_2	Z	0.00	-3	3.00	Passed
1/9/2012 6:03	SO_2	S	202.00	200	2.00	Passed
1/9/2012 6:03	SO_2	Z	0.00	-3	3.00	Passed
1/9/2012 7:30	SO_2	S	202.00	206	4.00	Passed
1/9/2012 7:30	SO_2	Z	0.00	1	1.00	Passed
1/10/2012 6:03	SO_2	S	202.00	204	2.00	Passed
1/10/2012 6:03	SO_2	Z	0.00	0	0.00	Passed
1/11/2012 6:03	SO_2	S	202.00	201	1.00	Passed
1/11/2012 6:03	SO_2	Z	0.00	-2	2.00	Passed
1/12/2012 6:03	SO_2	S	202.00	200	2.00	Passed
1/12/2012 6:03	SO_2	Z	0.00	-3	3.00	Passed
1/13/2012 6:03	SO_2	S	202.00	195	7.00	Passed
1/13/2012 6:03	SO_2	Z	0.00	-3	3.00	Passed
1/13/2012 7:00	SO_2	S	202.00	202	0.00	Passed
1/13/2012 7:00	SO_2	Z	0.00	-2	2.00	Passed
1/14/2012 6:03	SO_2	S	202.00	203	1.00	Passed
1/14/2012 6:03	SO_2	Z	0.00	-4	4.00	Passed
1/15/2012 6:03	SO_2	S	202.00	201	1.00	Passed
1/15/2012 6:03	SO_2	Z	0.00	-4	4.00	Passed

Fluid Catalytic Cracking Unit (FCCU) EPN 42CB2201 Daily SO_2 and NO_X CEMS Drift Tests						
Date/Time	**Component**	**Type**	**Reference**	**Measurement**	**Difference**	**Pass/Fail**
1/16/2012 6:03	SO_2	S	202.00	198	4.00	Passed
1/16/2012 6:03	SO_2	Z	0.00	-7	7.00	Passed
1/17/2012 6:03	SO_2	S	202.00	201	1.00	Passed
1/17/2012 6:03	SO_2	Z	0.00	-1	1.00	Passed
1/18/2012 6:03	SO_2	S	202.00	204	2.00	Passed
1/18/2012 6:03	SO_2	Z	0.00	0	0.00	Passed
1/19/2012 6:03	SO_2	S	202.00	201	1.00	Passed
1/19/2012 6:03	SO_2	Z	0.00	-1	1.00	Passed
1/20/2012 6:03	SO_2	S	202.00	203	1.00	Passed
1/20/2012 6:03	SO_2	Z	0.00	1	1.00	Passed
1/21/2012 6:03	SO_2	S	202.00	203	1.00	Passed
1/21/2012 6:03	SO_2	Z	0.00	0	0.00	Passed
1/22/2012 6:03	SO_2	S	202.00	202	0.00	Passed
1/22/2012 6:03	SO_2	Z	0.00	0	0.00	Passed
1/23/2012 6:03	SO_2	S	202.00	204	2.00	Passed
1/23/2012 6:03	SO_2	Z	0.00	0	0.00	Passed
1/24/2012 6:03	SO_2	S	202.00	205	3.00	Passed
1/24/2012 6:03	SO_2	Z	0.00	0	0.00	Passed
1/25/2012 6:04	SO_2	S	202.00	200	2.00	Passed
1/25/2012 6:04	SO_2	Z	0.00	0	0.00	Passed
1/26/2012 6:03	SO_2	S	202.00	204	2.00	Passed
1/26/2012 6:03	SO_2	Z	0.00	1	1.00	Passed
1/27/2012 6:04	SO_2	S	202.00	206	4.00	Passed
1/27/2012 6:04	SO_2	Z	0.00	2	2.00	Passed
1/28/2012 6:03	SO_2	S	202.00	204	2.00	Passed
1/28/2012 6:03	SO_2	Z	0.00	0	0.00	Passed
1/29/2012 6:04	SO_2	S	202.00	208	6.00	Passed
1/29/2012 6:04	SO_2	Z	0.00	1	1.00	Passed
1/30/2012 6:03	SO_2	S	202.00	205	3.00	Passed
1/30/2012 6:03	SO_2	Z	0.00	-1	1.00	Passed
1/31/2012 6:03	SO_2	S	202.00	203	1.00	Passed
1/31/2012 6:03	SO_2	Z	0.00	-2	2.00	Passed
2/1/2012 6:03	SO_2	S	202.00	201	1.00	Passed
2/1/2012 6:03	SO_2	Z	0.00	-2	2.00	Passed
2/2/2012 6:04	SO_2	S	202.00	201	1.00	Passed
2/2/2012 6:04	SO_2	Z	0.00	-2	2.00	Passed
2/3/2012 6:03	SO_2	S	202.00	202	0.00	Passed
2/3/2012 6:03	SO_2	Z	0.00	0	0.00	Passed

Fluid Catalytic Cracking Unit (FCCU) EPN 42CB2201 Daily SO_2 and NO_x CEMS Drift Tests						
Date/Time	**Component**	**Type**	**Reference**	**Measurement**	**Difference**	**Pass/Fail**
2/4/2012 6:15	SO_2	S	202.00	201	1.00	Passed
2/5/2012 6:03	SO_2	S	202.00	205	3.00	Passed
2/5/2012 6:03	SO_2	Z	0.00	1	1.00	Passed
2/6/2012 6:04	SO_2	S	202.00	207	5.00	Passed
2/6/2012 6:04	SO_2	Z	0.00	1	1.00	Passed
2/7/2012 6:03	SO_2	S	202.00	194	8.00	Passed
2/7/2012 6:03	SO_2	Z	0.00	0	0.00	Passed
2/8/2012 6:04	SO_2	S	202.00	196	6.00	Passed
2/8/2012 6:04	SO_2	Z	0.00	0	0.00	Passed
2/9/2012 6:03	SO_2	S	202.00	196	6.00	Passed
2/9/2012 6:03	SO_2	Z	0.00	1	1.00	Passed
2/10/2012 6:03	SO_2	S	199.20	196	3.00	Passed
2/10/2012 6:03	SO_2	Z	0.00	1	1.00	Passed
2/11/2012 6:03	SO_2	S	199.20	201	2.00	Passed
2/11/2012 6:03	SO_2	Z	0.00	0	0.00	Passed
2/12/2012 6:04	SO_2	S	199.20	200	1.00	Passed
2/12/2012 6:04	SO_2	Z	0.00	1	1.00	Passed
2/13/2012 6:03	SO_2	S	199.20	196	3.00	Passed
2/13/2012 6:03	SO_2	Z	0.00	0	0.00	Passed
2/14/2012 6:04	SO_2	S	199.20	198	1.00	Passed
2/14/2012 6:04	SO_2	Z	0.00	-1	1.00	Passed
2/15/2012 6:03	SO_2	S	199.20	196	3.00	Passed
2/15/2012 6:03	SO_2	Z	0.00	1	1.00	Passed
2/16/2012 6:04	SO_2	S	199.20	197	2.00	Passed
2/16/2012 6:04	SO_2	Z	0.00	0	0.00	Passed
2/17/2012 6:03	SO_2	S	199.20	198	1.00	Passed
2/17/2012 6:03	SO_2	Z	0.00	0	0.00	Passed
2/18/2012 6:04	SO_2	S	199.20	190	9.00	Passed
2/18/2012 6:04	SO_2	Z	0.00	0	0.00	Passed
2/19/2012 6:03	SO_2	S	199.20	197	2.00	Passed
2/19/2012 6:03	SO_2	Z	0.00	0	0.00	Passed
2/20/2012 6:04	SO_2	S	199.20	197	2.00	Passed
2/20/2012 6:04	SO_2	Z	0.00	0	0.00	Passed
2/21/2012 6:03	SO_2	S	199.20	196	3.00	Passed
2/21/2012 6:03	SO_2	Z	0.00	-1	1.00	Passed
2/22/2012 6:04	SO_2	S	199.20	195	4.00	Passed
2/22/2012 6:04	SO_2	Z	0.00	-1	1.00	Passed
2/23/2012 6:03	SO_2	S	199.20	194	5.00	Passed

Fluid Catalytic Cracking Unit (FCCU) EPN 42CB2201 Daily SO_2 and NO_X CEMS Drift Tests						
Date/Time	**Component**	**Type**	**Reference**	**Measurement**	**Difference**	**Pass/Fail**
2/23/2012 6:03	SO_2	Z	0.00	0	0.00	Passed
2/23/2012 8:20	SO_2	S	199.20	192	7.00	Passed
2/23/2012 8:20	SO_2	Z	0.00	-1	1.00	Passed
2/24/2012 6:04	SO_2	S	199.20	197	2.00	Passed
2/24/2012 6:04	SO_2	Z	0.00	1	1.00	Passed
2/25/2012 6:03	SO_2	S	199.20	199	0.00	Passed
2/25/2012 6:03	SO_2	Z	0.00	2	2.00	Passed
2/26/2012 6:04	SO_2	S	199.20	199	0.00	Passed
2/26/2012 6:04	SO_2	Z	0.00	0	0.00	Passed
2/27/2012 6:03	SO_2	S	199.20	197	2.00	Passed
2/27/2012 6:03	SO_2	Z	0.00	0	0.00	Passed
2/28/2012 6:04	SO_2	S	199.20	197	2.00	Passed
2/28/2012 6:04	SO_2	Z	0.00	0	0.00	Passed
2/29/2012 6:15	SO_2	S	199.20	196	3.00	Passed
3/1/2012 6:04	SO_2	S	199.20	188	11.00	Passed
3/1/2012 6:04	SO_2	Z	0.00	-1	1.00	Passed
3/1/2012 6:55	SO_2	S	199.20	199	0.00	Passed
3/1/2012 6:55	SO_2	Z	0.00	0	0.00	Passed
3/2/2012 6:03	SO_2	S	199.20	197	2.00	Passed
3/2/2012 6:03	SO_2	Z	0.00	1	1.00	Passed
3/3/2012 6:04	SO_2	S	199.20	199	0.00	Passed
3/3/2012 6:04	SO_2	Z	0.00	0	0.00	Passed
3/4/2012 6:03	SO_2	S	199.20	201	2.00	Passed
3/4/2012 6:03	SO_2	Z	0.00	1	1.00	Passed
3/5/2012 6:04	SO_2	S	199.20	200	1.00	Passed
3/5/2012 6:04	SO_2	Z	0.00	-1	1.00	Passed
3/6/2012 6:03	SO_2	S	199.20	202	3.00	Passed
3/6/2012 6:03	SO_2	Z	0.00	-2	2.00	Passed
3/7/2012 6:04	SO_2	S	199.20	198	1.00	Passed
3/7/2012 6:04	SO_2	Z	0.00	-1	1.00	Passed
3/8/2012 6:03	SO_2	S	199.20	198	1.00	Passed
3/8/2012 6:03	SO_2	Z	0.00	-1	1.00	Passed
3/9/2012 6:04	SO_2	S	199.20	198	1.00	Passed
3/9/2012 6:04	SO_2	Z	0.00	-1	1.00	Passed
3/10/2012 6:03	SO_2	S	199.20	200	1.00	Passed
3/10/2012 6:03	SO_2	Z	0.00	-1	1.00	Passed
3/11/2012 6:04	SO_2	S	199.20	197	2.00	Passed
3/11/2012 6:04	SO_2	Z	0.00	-2	2.00	Passed

Fluid Catalytic Cracking Unit (FCCU) EPN 42CB2201 Daily SO_2 and NO_X CEMS Drift Tests						
Date/Time	**Component**	**Type**	**Reference**	**Measurement**	**Difference**	**Pass/Fail**
3/12/2012 6:08	SO_2	S	199.20	200	1.00	Passed
3/12/2012 6:08	SO_2	Z	0.00	-2	2.00	Passed
3/13/2012 11:46	SO_2	S	199.20	202	3.00	Passed
3/13/2012 11:46	SO_2	Z	0.00	1	1.00	Passed
3/14/2012 5:03	SO_2	S	199.20	200	1.00	Passed
3/14/2012 5:03	SO_2	Z	0.00	1	1.00	Passed
3/15/2012 5:03	SO_2	S	199.20	201	2.00	Passed
3/15/2012 5:03	SO_2	Z	0.00	0	0.00	Passed
3/16/2012 5:03	SO_2	S	199.20	201	2.00	Passed
3/16/2012 5:03	SO_2	Z	0.00	1	1.00	Passed
3/17/2012 5:03	SO_2	S	199.20	200	1.00	Passed
3/17/2012 5:03	SO_2	Z	0.00	1	1.00	Passed
3/18/2012 5:03	SO_2	S	199.20	201	2.00	Passed
3/18/2012 5:03	SO_2	Z	0.00	1	1.00	Passed
3/19/2012 5:04	SO_2	S	199.20	196	3.00	Passed
3/19/2012 5:04	SO_2	Z	0.00	2	2.00	Passed
3/19/2012 6:08	SO_2	S	199.20	202	3.00	Passed
3/19/2012 6:08	SO_2	Z	0.00	1	1.00	Passed
3/20/2012 5:03	SO_2	S	199.20	201	2.00	Passed
3/20/2012 5:03	SO_2	Z	0.00	0	0.00	Passed
3/21/2012 5:04	SO_2	S	199.20	203	4.00	Passed
3/21/2012 5:04	SO_2	Z	0.00	-1	1.00	Passed
3/22/2012 5:03	SO_2	S	199.20	202	3.00	Passed
3/22/2012 5:03	SO_2	Z	0.00	0	0.00	Passed
3/23/2012 5:03	SO_2	S	199.20	200	1.00	Passed
3/23/2012 5:03	SO_2	Z	0.00	0	0.00	Passed
3/24/2012 5:03	SO_2	S	199.20	203	4.00	Passed
3/24/2012 5:03	SO_2	Z	0.00	-2	2.00	Passed
3/25/2012 5:03	SO_2	S	199.20	200	1.00	Passed
3/25/2012 5:03	SO_2	Z	0.00	-3	3.00	Passed
3/26/2012 5:03	SO_2	S	199.20	200	1.00	Passed
3/26/2012 5:03	SO_2	Z	0.00	-3	3.00	Passed
3/27/2012 5:03	SO_2	S	199.20	199	0.00	Passed
3/27/2012 5:03	SO_2	Z	0.00	-3	3.00	Passed
3/28/2012 5:03	SO_2	S	199.20	200	1.00	Passed
3/28/2012 5:03	SO_2	Z	0.00	-3	3.00	Passed
3/29/2012 5:03	SO_2	S	199.20	198	1.00	Passed
3/29/2012 5:03	SO_2	Z	0.00	-4	4.00	Passed

Fluid Catalytic Cracking Unit (FCCU) EPN 42CB2201 Daily SO_2 and NO_x CEMS Drift Tests						
Date/Time	**Component**	**Type**	**Reference**	**Measurement**	**Difference**	**Pass/Fail**
3/30/2012 5:03	SO_2	S	199.20	198	1.00	Passed
3/30/2012 5:03	SO_2	Z	0.00	-3	3.00	Passed
3/31/2012 5:03	SO_2	S	199.20	197	2.00	Passed
3/31/2012 5:03	SO_2	Z	0.00	-3	3.00	Passed
4/1/2012 5:03	SO_2	S	199.20	199	0.00	Passed
4/1/2012 5:03	SO_2	Z	0.00	-4	4.00	Passed
4/2/2012 5:03	SO_2	S	199.20	199	0.00	Passed
4/2/2012 5:03	SO_2	Z	0.00	-4	4.00	Passed
4/3/2012 5:03	SO_2	S	199.20	187	12.00	Passed
4/3/2012 5:03	SO_2	Z	0.00	-4	4.00	Passed
4/3/2012 5:49	SO_2	S	199.20	199	0.00	Passed
4/3/2012 5:49	SO_2	Z	0.00	1	1.00	Passed
4/4/2012 5:03	SO_2	S	198.10	199	1.00	Passed
4/4/2012 5:03	SO_2	Z	0.00	1	1.00	Passed
4/5/2012 5:03	SO_2	S	198.10	199	1.00	Passed
4/5/2012 5:03	SO_2	Z	0.00	2	2.00	Passed
4/6/2012 5:03	SO_2	S	198.10	201	3.00	Passed
4/6/2012 5:03	SO_2	Z	0.00	1	1.00	Passed
4/7/2012 5:03	SO_2	S	198.10	200	2.00	Passed
4/7/2012 5:03	SO_2	Z	0.00	1	1.00	Passed
4/8/2012 5:03	SO_2	S	198.10	202	4.00	Passed
4/8/2012 5:03	SO_2	Z	0.00	1	1.00	Passed
4/9/2012 5:03	SO_2	S	198.10	200	2.00	Passed
4/9/2012 5:03	SO_2	Z	0.00	1	1.00	Passed
4/10/2012 5:03	SO_2	S	198.10	200	2.00	Passed
4/10/2012 5:03	SO_2	Z	0.00	1	1.00	Passed
4/11/2012 5:03	SO_2	S	198.10	200	2.00	Passed
4/11/2012 5:03	SO_2	Z	0.00	-1	1.00	Passed
4/12/2012 5:03	SO_2	S	198.10	199	1.00	Passed
4/12/2012 5:03	SO_2	Z	0.00	-1	1.00	Passed
4/13/2012 5:03	SO_2	S	198.10	199	1.00	Passed
4/13/2012 5:03	SO_2	Z	0.00	-1	1.00	Passed
4/14/2012 5:03	SO_2	S	198.10	198	0.00	Passed
4/14/2012 5:03	SO_2	Z	0.00	0	0.00	Passed
4/15/2012 5:03	SO_2	S	198.10	202	4.00	Passed
4/15/2012 5:03	SO_2	Z	0.00	-1	1.00	Passed
4/16/2012 5:03	SO_2	S	198.10	200	2.00	Passed
4/16/2012 5:03	SO_2	Z	0.00	0	0.00	Passed

Fluid Catalytic Cracking Unit (FCCU) EPN 42CB2201 Daily SO_2 and NO_x CEMS Drift Tests						
Date/Time	**Component**	**Type**	**Reference**	**Measurement**	**Difference**	**Pass/Fail**
4/17/2012 5:03	SO_2	S	198.10	202	4.00	Passed
4/17/2012 5:03	SO_2	Z	0.00	3	3.00	Passed
4/18/2012 5:03	SO_2	S	198.10	207	9.00	Passed
4/18/2012 5:03	SO_2	Z	0.00	5	5.00	Passed
4/19/2012 5:03	SO_2	S	198.10	214	16.00	Passed
4/19/2012 5:03	SO_2	Z	0.00	15	15.00	Passed
4/19/2012 5:53	SO_2	S	198.10	196	2.00	Passed
4/19/2012 5:53	SO_2	Z	0.00	0	0.00	Passed
4/20/2012 5:03	SO_2	S	198.10	202	4.00	Passed
4/20/2012 5:03	SO_2	Z	0.00	6	6.00	Passed
4/21/2012 5:03	SO_2	S	198.10	201	3.00	Passed
4/21/2012 5:03	SO_2	Z	0.00	11	11.00	Passed
4/22/2012 5:03	SO_2	S	198.10	210	12.00	Passed
4/22/2012 5:03	SO_2	Z	0.00	12	12.00	Passed
4/23/2012 5:03	SO_2	S	198.10	211	13.00	Passed
4/23/2012 5:03	SO_2	Z	0.00	13	13.00	Passed
4/23/2012 6:08	SO_2	S	198.10	199	1.00	Passed
4/23/2012 6:08	SO_2	Z	0.00	1	1.00	Passed
4/24/2012 5:03	SO_2	S	198.10	196	2.00	Passed
4/24/2012 5:03	SO_2	Z	0.00	0	0.00	Passed
4/25/2012 5:03	SO_2	S	198.10	195	3.00	Passed
4/25/2012 5:03	SO_2	Z	0.00	-1	1.00	Passed
4/26/2012 5:03	SO_2	S	198.10	199	1.00	Passed
4/26/2012 5:03	SO_2	Z	0.00	2	2.00	Passed
4/27/2012 5:03	SO_2	S	198.10	198	0.00	Passed
4/27/2012 5:03	SO_2	Z	0.00	1	1.00	Passed
4/28/2012 5:03	SO_2	S	198.10	195	3.00	Passed
4/28/2012 5:03	SO_2	Z	0.00	0	0.00	Passed
4/29/2012 5:03	SO_2	S	198.10	195	3.00	Passed
4/29/2012 5:03	SO_2	Z	0.00	-1	1.00	Passed
4/30/2012 5:03	SO_2	S	198.10	194	4.00	Passed
4/30/2012 5:03	SO_2	Z	0.00	-3	3.00	Passed
5/1/2012 5:03	SO_2	S	198.10	196	2.00	Passed
5/1/2012 5:03	SO_2	Z	0.00	-2	2.00	Passed
5/2/2012 5:03	SO_2	S	198.10	202	4.00	Passed
5/2/2012 5:03	SO_2	Z	0.00	6	6.00	Passed
5/3/2012 5:03	SO_2	S	198.10	207	9.00	Passed
5/3/2012 5:03	SO_2	Z	0.00	10	10.00	Passed

Fluid Catalytic Cracking Unit (FCCU) EPN 42CB2201 Daily SO_2 and NO_x CEMS Drift Tests						
Date/Time	**Component**	**Type**	**Reference**	**Measurement**	**Difference**	**Pass/Fail**
5/4/2012 5:03	SO_2	S	198.10	209	11.00	Passed
5/4/2012 5:03	SO_2	Z	0.00	12	12.00	Passed
5/5/2012 5:03	SO_2	S	198.10	208	10.00	Passed
5/5/2012 5:03	SO_2	Z	0.00	1	1.00	Passed
5/6/2012 5:03	SO_2	S	198.10	207	9.00	Passed
5/6/2012 5:03	SO_2	Z	0.00	3	3.00	Passed
5/7/2012 5:03	SO_2	S	198.10	208	10.00	Passed
5/7/2012 5:03	SO_2	Z	0.00	4	4.00	Passed
5/8/2012 5:03	SO_2	S	198.10	207	9.00	Passed
5/8/2012 5:03	SO_2	Z	0.00	4	4.00	Passed
5/9/2012 5:03	SO_2	S	198.10	202	4.00	Passed
5/9/2012 5:03	SO_2	Z	0.00	1	1.00	Passed
5/10/2012 5:03	SO_2	S	198.10	202	4.00	Passed
5/10/2012 5:03	SO_2	Z	0.00	1	1.00	Passed
5/11/2012 5:03	SO_2	S	198.10	200	2.00	Passed
5/11/2012 5:03	SO_2	Z	0.00	1	1.00	Passed
5/12/2012 5:03	SO_2	S	198.10	204	6.00	Passed
5/12/2012 5:03	SO_2	Z	0.00	2	2.00	Passed
5/13/2012 5:03	SO_2	S	198.10	203	5.00	Passed
5/13/2012 5:03	SO_2	Z	0.00	1	1.00	Passed
5/14/2012 5:03	SO_2	S	198.10	202	4.00	Passed
5/14/2012 5:03	SO_2	Z	0.00	0	0.00	Passed
5/15/2012 5:03	SO_2	S	198.10	202	4.00	Passed
5/15/2012 5:03	SO_2	Z	0.00	0	0.00	Passed
5/16/2012 5:03	SO_2	S	198.10	203	5.00	Passed
5/16/2012 5:03	SO_2	Z	0.00	0	0.00	Passed
5/17/2012 5:03	SO_2	S	198.10	205	7.00	Passed
5/17/2012 5:03	SO_2	Z	0.00	2	2.00	Passed
5/18/2012 5:03	SO_2	S	198.10	205	7.00	Passed
5/18/2012 5:03	SO_2	Z	0.00	3	3.00	Passed
5/19/2012 5:03	SO_2	S	198.10	204	6.00	Passed
5/19/2012 5:03	SO_2	Z	0.00	3	3.00	Passed
5/20/2012 5:03	SO_2	S	198.10	205	7.00	Passed
5/20/2012 5:03	SO_2	Z	0.00	1	1.00	Passed
5/21/2012 5:03	SO_2	S	198.10	205	7.00	Passed
5/21/2012 5:03	SO_2	Z	0.00	2	2.00	Passed
5/22/2012 5:03	SO_2	S	198.40	202	4.00	Passed
5/22/2012 5:03	SO_2	Z	0.00	0	0.00	Passed

Fluid Catalytic Cracking Unit (FCCU) EPN 42CB2201 Daily SO_2 and NO_x CEMS Drift Tests						
Date/Time	**Component**	**Type**	**Reference**	**Measurement**	**Difference**	**Pass/Fail**
5/23/2012 5:03	SO_2	S	198.40	200	2.00	Passed
5/23/2012 5:03	SO_2	Z	0.00	-2	2.00	Passed
5/24/2012 5:03	SO_2	S	198.40	198	0.00	Passed
5/24/2012 5:03	SO_2	Z	0.00	-1	1.00	Passed
5/25/2012 5:03	SO_2	S	198.40	197	1.00	Passed
5/25/2012 5:03	SO_2	Z	0.00	-3	3.00	Passed
5/26/2012 5:03	SO_2	S	198.40	196	2.00	Passed
5/26/2012 5:03	SO_2	Z	0.00	-6	6.00	Passed
5/27/2012 5:03	SO_2	S	198.40	197	1.00	Passed
5/27/2012 5:03	SO_2	Z	0.00	-2	2.00	Passed
5/28/2012 5:03	SO_2	S	198.40	200	2.00	Passed
5/28/2012 5:03	SO_2	Z	0.00	-1	1.00	Passed
5/29/2012 5:03	SO_2	S	198.40	200	2.00	Passed
5/29/2012 5:03	SO_2	Z	0.00	-2	2.00	Passed
5/30/2012 5:03	SO_2	S	198.40	199	1.00	Passed
5/30/2012 5:03	SO_2	Z	0.00	-2	2.00	Passed
5/31/2012 5:03	SO_2	S	198.40	196	2.00	Passed
5/31/2012 5:03	SO_2	Z	0.00	-4	4.00	Passed
6/1/2012 5:03	SO_2	S	198.40	199	1.00	Passed
6/1/2012 5:03	SO_2	Z	0.00	-2	2.00	Passed
6/2/2012 5:03	SO_2	S	198.40	203	5.00	Passed
6/2/2012 5:03	SO_2	Z	0.00	0	0.00	Passed
6/3/2012 5:03	SO_2	S	198.40	201	3.00	Passed
6/3/2012 5:03	SO_2	Z	0.00	0	0.00	Passed
6/4/2012 5:03	SO_2	S	198.40	206	8.00	Passed
6/4/2012 5:03	SO_2	Z	0.00	3	3.00	Passed
6/5/2012 5:03	SO_2	S	198.40	208	10.00	Passed
6/5/2012 5:03	SO_2	Z	0.00	6	6.00	Passed
6/6/2012 5:03	SO_2	S	198.40	213	15.00	Passed
6/6/2012 5:03	SO_2	Z	0.00	11	11.00	Passed
6/6/2012 6:53	SO_2	S	198.40	203	5.00	Passed
6/6/2012 6:53	SO_2	Z	0.00	0	0.00	Passed
6/7/2012 5:03	SO_2	S	198.40	202	4.00	Passed
6/7/2012 5:03	SO_2	Z	0.00	0	0.00	Passed
6/8/2012 5:03	SO_2	S	198.40	203	5.00	Passed
6/8/2012 5:03	SO_2	Z	0.00	0	0.00	Passed
6/9/2012 5:03	SO_2	S	198.40	208	10.00	Passed
6/9/2012 5:03	SO_2	Z	0.00	6	6.00	Passed

Fluid Catalytic Cracking Unit (FCCU) EPN 42CB2201 Daily SO_2 and NO_x CEMS Drift Tests						
Date/Time	**Component**	**Type**	**Reference**	**Measurement**	**Difference**	**Pass/Fail**
6/10/2012 5:04	SO_2	S	198.40	213	15.00	Passed
6/10/2012 5:04	SO_2	Z	0.00	9	9.00	Passed
6/10/2012 7:41	SO_2	S	198.40	197	1.00	Passed
6/10/2012 7:41	SO_2	Z	0.00	1	1.00	Passed
6/11/2012 5:03	SO_2	S	198.40	201	3.00	Passed
6/11/2012 5:03	SO_2	Z	0.00	2	2.00	Passed
6/12/2012 5:04	SO_2	S	198.40	201	3.00	Passed
6/12/2012 5:04	SO_2	Z	0.00	2	2.00	Passed
6/13/2012 5:03	SO_2	S	198.40	189	9.00	Passed
6/13/2012 5:03	SO_2	Z	0.00	1	1.00	Passed
6/14/2012 5:04	SO_2	S	198.40	200	2.00	Passed
6/14/2012 5:04	SO_2	Z	0.00	3	3.00	Passed
6/15/2012 5:03	SO_2	S	198.40	198	0.00	Passed
6/15/2012 5:03	SO_2	Z	0.00	3	3.00	Passed
6/16/2012 5:03	SO_2	S	198.40	200	2.00	Passed
6/16/2012 5:03	SO_2	Z	0.00	1	1.00	Passed
6/17/2012 5:03	SO_2	S	198.40	199	1.00	Passed
6/17/2012 5:03	SO_2	Z	0.00	1	1.00	Passed
6/18/2012 5:04	SO_2	S	198.40	198	0.00	Passed
6/18/2012 5:04	SO_2	Z	0.00	1	1.00	Passed
6/19/2012 5:03	SO_2	S	198.40	201	3.00	Passed
6/19/2012 5:03	SO_2	Z	0.00	4	4.00	Passed
6/20/2012 5:04	SO_2	S	198.40	203	5.00	Passed
6/20/2012 5:04	SO_2	Z	0.00	5	5.00	Passed
6/21/2012 5:03	SO_2	S	198.40	203	5.00	Passed
6/21/2012 5:03	SO_2	Z	0.00	6	6.00	Passed
6/21/2012 11:11	SO_2	S	198.40	199	1.00	Passed
6/21/2012 11:11	SO_2	Z	0.00	0	0.00	Passed
6/22/2012 5:04	SO_2	S	198.40	199	1.00	Passed
6/22/2012 5:04	SO_2	Z	0.00	1	1.00	Passed
6/23/2012 5:03	SO_2	S	198.40	199	1.00	Passed
6/23/2012 5:03	SO_2	Z	0.00	0	0.00	Passed
6/24/2012 5:04	SO_2	S	198.40	196	2.00	Passed
6/24/2012 5:04	SO_2	Z	0.00	-2	2.00	Passed
6/25/2012 5:03	SO_2	S	198.40	197	1.00	Passed
6/25/2012 5:03	SO_2	Z	0.00	-1	1.00	Passed
6/26/2012 5:04	SO_2	S	198.40	195	3.00	Passed
6/26/2012 5:04	SO_2	Z	0.00	-2	2.00	Passed

Fluid Catalytic Cracking Unit (FCCU) EPN 42CB2201 Daily SO_2 and NO_x CEMS Drift Tests						
Date/Time	**Component**	**Type**	**Reference**	**Measurement**	**Difference**	**Pass/Fail**
6/27/2012 5:03	SO_2	S	198.40	196	2.00	Passed
6/27/2012 5:03	SO_2	Z	0.00	-1	1.00	Passed
6/28/2012 5:04	SO_2	S	198.40	196	2.00	Passed
6/28/2012 5:04	SO_2	Z	0.00	-3	3.00	Passed
6/29/2012 5:03	SO_2	S	198.40	194	4.00	Passed
6/29/2012 5:03	SO_2	Z	0.00	-5	5.00	Passed
6/30/2012 5:04	SO_2	S	198.40	194	4.00	Passed
6/30/2012 5:04	SO_2	Z	0.00	-6	6.00	Passed
1/1/2012 6:05	NO_X	S	417	415	2	Passed
1/1/2012 6:05	NO_X	Z	0	0	0	Passed
1/2/2012 6:04	NO_X	S	417	411	6	Passed
1/2/2012 6:04	NO_X	Z	0	0	0	Passed
1/3/2012 6:05	NO_X	S	417	410	7	Passed
1/3/2012 6:05	NO_X	Z	0	0	0	Passed
1/4/2012 6:04	NO_X	S	417	411	6	Passed
1/4/2012 6:04	NO_X	Z	0	0	0	Passed
1/5/2012 6:05	NO_X	S	417	391	26	Failed
1/5/2012 6:05	NO_X	Z	0	2	2	Passed
1/5/2012 7:58	NO_X	S	417	423	6	Passed
1/5/2012 7:58	NO_X	Z	0	1	1	Passed
1/5/2012 14:10	NO_X	S	417	425	8	Passed
1/5/2012 14:10	NO_X	Z	0	1	1	Passed
1/6/2012 6:03	NO_X	S	417	415	2	Passed
1/6/2012 6:03	NO_X	Z	0	2	2	Passed
1/7/2012 6:03	NO_X	S	417	414	3	Passed
1/7/2012 6:03	NO_X	Z	0	3	3	Passed
1/8/2012 6:03	NO_X	S	417	402	15	Passed
1/8/2012 6:03	NO_X	Z	0	2	2	Passed
1/9/2012 6:03	NO_X	S	417	416	1	Passed
1/9/2012 6:03	NO_X	Z	0	1	1	Passed
1/9/2012 7:30	NO_X	S	417	418	1	Passed
1/9/2012 7:30	NO_X	Z	0	1	1	Passed
1/10/2012 6:03	NO_X	S	417	405	12	Passed
1/10/2012 6:03	NO_X	Z	0	1	1	Passed
1/11/2012 6:03	NO_X	S	417	430	13	Passed
1/11/2012 6:03	NO_X	Z	0	1	1	Passed
1/12/2012 6:03	NO_X	S	417	432	15	Passed
1/12/2012 6:03	NO_X	Z	0	0	0	Passed

Fluid Catalytic Cracking Unit (FCCU) EPN 42CB2201 Daily SO_2 and NO_x CEMS Drift Tests						
Date/Time	**Component**	**Type**	**Reference**	**Measurement**	**Difference**	**Pass/Fail**
1/13/2012 6:03	NO_X	S	417	434	17	Passed
1/13/2012 6:03	NO_X	Z	0	0	0	Passed
1/13/2012 7:00	NO_X	S	417	418	1	Passed
1/13/2012 7:00	NO_X	Z	0	0	0	Passed
1/14/2012 6:03	NO_X	S	417	416	1	Passed
1/14/2012 6:03	NO_X	Z	0	0	0	Passed
1/15/2012 6:03	NO_X	S	417	416	1	Passed
1/15/2012 6:03	NO_X	Z	0	0	0	Passed
1/16/2012 6:03	NO_X	S	417	418	1	Passed
1/16/2012 6:03	NO_X	Z	0	0	0	Passed
1/17/2012 6:03	NO_X	S	417	416	1	Passed
1/17/2012 6:03	NO_X	Z	0	0	0	Passed
1/18/2012 6:03	NO_X	S	417	413	4	Passed
1/18/2012 6:03	NO_X	Z	0	0	0	Passed
1/19/2012 6:03	NO_X	S	417	415	2	Passed
1/19/2012 6:03	NO_X	Z	0	0	0	Passed
1/20/2012 6:03	NO_X	S	417	416	1	Passed
1/20/2012 6:03	NO_X	Z	0	0	0	Passed
1/21/2012 6:03	NO_X	S	417	419	2	Passed
1/21/2012 6:03	NO_X	Z	0	-1	1	Passed
1/22/2012 6:03	NO_X	S	417	419	2	Passed
1/22/2012 6:03	NO_X	Z	0	-1	1	Passed
1/23/2012 6:03	NO_X	S	417	418	1	Passed
1/23/2012 6:03	NO_X	Z	0	0	0	Passed
1/24/2012 6:03	NO_X	S	417	419	2	Passed
1/24/2012 6:03	NO_X	Z	0	-1	1	Passed
1/25/2012 6:04	NO_X	S	417	420	3	Passed
1/25/2012 6:04	NO_X	Z	0	-1	1	Passed
1/26/2012 6:03	NO_X	S	417	416	1	Passed
1/26/2012 6:03	NO_X	Z	0	0	0	Passed
1/27/2012 6:04	NO_X	S	417	414	3	Passed
1/27/2012 6:04	NO_X	Z	0	0	0	Passed
1/28/2012 6:03	NO_X	S	417	413	4	Passed
1/28/2012 6:03	NO_X	Z	0	-1	1	Passed
1/29/2012 6:04	NO_X	S	417	412	5	Passed
1/29/2012 6:04	NO_X	Z	0	-1	1	Passed
1/30/2012 6:03	NO_X	S	417	412	5	Passed
1/30/2012 6:03	NO_X	Z	0	-1	1	Passed

Fluid Catalytic Cracking Unit (FCCU) EPN 42CB2201 Daily SO_2 and NO_X CEMS Drift Tests						
Date/Time	**Component**	**Type**	**Reference**	**Measurement**	**Difference**	**Pass/Fail**
1/31/2012 6:03	NO_X	S	417	414	3	Passed
1/31/2012 6:03	NO_X	Z	0	-1	1	Passed
2/1/2012 6:03	NO_X	S	417	414	3	Passed
2/1/2012 6:03	NO_X	Z	0	-1	1	Passed
2/2/2012 6:04	NO_X	S	417	417	0	Passed
2/2/2012 6:04	NO_X	Z	0	-1	1	Passed
2/3/2012 6:03	NO_X	S	417	417	0	Passed
2/3/2012 6:03	NO_X	Z	0	-1	1	Passed
2/5/2012 6:03	NO_X	S	417	415	2	Passed
2/5/2012 6:03	NO_X	Z	0	0	0	Passed
2/6/2012 6:04	NO_X	S	417	413	4	Passed
2/6/2012 6:04	NO_X	Z	0	0	0	Passed
2/7/2012 6:03	NO_X	S	414.8	421	6	Passed
2/7/2012 6:03	NO_X	Z	0	0	0	Passed
2/8/2012 6:04	NO_X	S	414.8	421	6	Passed
2/8/2012 6:04	NO_X	Z	0	0	0	Passed
2/9/2012 6:03	NO_X	S	414.8	419	4	Passed
2/9/2012 6:03	NO_X	Z	0	0	0	Passed
2/10/2012 6:03	NO_X	S	414.8	414	1	Passed
2/10/2012 6:03	NO_X	Z	0	0	0	Passed
2/11/2012 6:03	NO_X	S	414.8	413	2	Passed
2/11/2012 6:03	NO_X	Z	0	0	0	Passed
2/12/2012 6:04	NO_X	S	414.8	405	10	Passed
2/12/2012 6:04	NO_X	Z	0	0	0	Passed
2/13/2012 6:03	NO_X	S	414.8	416	1	Passed
2/13/2012 6:03	NO_X	Z	0	0	0	Passed
2/14/2012 6:04	NO_X	S	414.8	417	2	Passed
2/14/2012 6:04	NO_X	Z	0	-1	1	Passed
2/15/2012 6:03	NO_X	S	414.8	419	4	Passed
2/15/2012 6:03	NO_X	Z	0	-1	1	Passed
2/16/2012 6:04	NO_X	S	414.8	418	3	Passed
2/16/2012 6:04	NO_X	Z	0	0	0	Passed
2/17/2012 6:03	NO_X	S	414.8	419	4	Passed
2/17/2012 6:03	NO_X	Z	0	0	0	Passed
2/18/2012 6:04	NO_X	S	414.8	419	4	Passed
2/18/2012 6:04	NO_X	Z	0	0	0	Passed
2/19/2012 6:03	NO_X	S	414.8	414	1	Passed
2/19/2012 6:03	NO_X	Z	0	0	0	Passed

Fluid Catalytic Cracking Unit (FCCU) EPN 42CB2201 Daily SO_2 and NO_X CEMS Drift Tests						
Date/Time	**Component**	**Type**	**Reference**	**Measurement**	**Difference**	**Pass/Fail**
2/20/2012 6:04	NO_X	S	414.8	416	1	Passed
2/20/2012 6:04	NO_X	Z	0	0	0	Passed
2/21/2012 6:03	NO_X	S	414.8	416	1	Passed
2/21/2012 6:03	NO_X	Z	0	-1	1	Passed
2/22/2012 6:04	NO_X	S	414.8	416	1	Passed
2/22/2012 6:04	NO_X	Z	0	0	0	Passed
2/23/2012 6:03	NO_X	S	414.8	417	2	Passed
2/23/2012 6:03	NO_X	Z	0	0	0	Passed
2/23/2012 8:20	NO_X	S	414.8	417	2	Passed
2/23/2012 8:20	NO_X	Z	0	0	0	Passed
2/24/2012 6:04	NO_X	S	414.8	415	0	Passed
2/24/2012 6:04	NO_X	Z	0	0	0	Passed
2/25/2012 6:03	NO_X	S	414.8	413	2	Passed
2/25/2012 6:03	NO_X	Z	0	-1	1	Passed
2/26/2012 6:04	NO_X	S	414.8	413	2	Passed
2/26/2012 6:04	NO_X	Z	0	-1	1	Passed
2/27/2012 6:03	NO_X	S	414.8	415	0	Passed
2/27/2012 6:03	NO_X	Z	0	-1	1	Passed
2/28/2012 6:04	NO_X	S	414.8	416	1	Passed
2/28/2012 6:04	NO_X	Z	0	-1	1	Passed
2/29/2012 6:08	NO_X	S	414.8	416	1	Passed
3/1/2012 6:04	NO_X	S	414.8	416	1	Passed
3/1/2012 6:04	NO_X	Z	0	-1	1	Passed
3/1/2012 6:55	NO_X	S	414.8	414	1	Passed
3/1/2012 6:55	NO_X	Z	0	-1	1	Passed
3/2/2012 6:03	NO_X	S	414.8	416	1	Passed
3/2/2012 6:03	NO_X	Z	0	-1	1	Passed
3/3/2012 6:04	NO_X	S	414.8	413	2	Passed
3/3/2012 6:04	NO_X	Z	0	-1	1	Passed
3/4/2012 6:03	NO_X	S	414.8	410	5	Passed
3/4/2012 6:03	NO_X	Z	0	-1	1	Passed
3/5/2012 6:04	NO_X	S	414.8	409	6	Passed
3/5/2012 6:04	NO_X	Z	0	-1	1	Passed
3/6/2012 6:03	NO_X	S	414.8	410	5	Passed
3/6/2012 6:03	NO_X	Z	0	-1	1	Passed
3/7/2012 6:04	NO_X	S	414.8	411	4	Passed
3/7/2012 6:04	NO_X	Z	0	-1	1	Passed
3/8/2012 6:03	NO_X	S	414.8	412	3	Passed

Fluid Catalytic Cracking Unit (FCCU) EPN 42CB2201 Daily SO_2 and NO_x CEMS Drift Tests						
Date/Time	**Component**	**Type**	**Reference**	**Measurement**	**Difference**	**Pass/Fail**
3/8/2012 6:03	NO_X	Z	0	-1	1	Passed
3/9/2012 6:04	NO_X	S	414.8	409	6	Passed
3/9/2012 6:04	NO_X	Z	0	0	0	Passed
3/10/2012 6:03	NO_X	S	414.8	415	0	Passed
3/10/2012 6:03	NO_X	Z	0	0	0	Passed
3/11/2012 6:04	NO_X	S	414.8	417	2	Passed
3/11/2012 6:04	NO_X	Z	0	-1	1	Passed
3/12/2012 6:08	NO_X	S	414.8	419	4	Passed
3/12/2012 6:08	NO_X	Z	0	0	0	Passed
3/13/2012 11:46	NO_X	S	414.8	421	6	Passed
3/13/2012 11:46	NO_X	Z	0	0	0	Passed
3/14/2012 5:03	NO_X	S	414.8	418	3	Passed
3/14/2012 5:03	NO_X	Z	0	0	0	Passed
3/15/2012 5:03	NO_X	S	414.8	418	3	Passed
3/15/2012 5:03	NO_X	Z	0	0	0	Passed
3/16/2012 5:03	NO_X	S	414.8	418	3	Passed
3/16/2012 5:03	NO_X	Z	0	0	0	Passed
3/17/2012 5:03	NO_X	S	414.8	419	4	Passed
3/17/2012 5:03	NO_X	Z	0	0	0	Passed
3/18/2012 5:03	NO_X	S	414.8	419	4	Passed
3/18/2012 5:03	NO_X	Z	0	0	0	Passed
3/19/2012 5:04	NO_X	S	414.8	418	3	Passed
3/19/2012 5:04	NO_X	Z	0	0	0	Passed
3/19/2012 6:08	NO_X	S	414.8	416	1	Passed
3/19/2012 6:08	NO_X	Z	0	0	0	Passed
3/20/2012 5:03	NO_X	S	414.8	418	3	Passed
3/20/2012 5:03	NO_X	Z	0	0	0	Passed
3/21/2012 5:04	NO_X	S	414.8	416	1	Passed
3/21/2012 5:04	NO_X	Z	0	0	0	Passed
3/22/2012 5:03	NO_X	S	414.8	416	1	Passed
3/22/2012 5:03	NO_X	Z	0	0	0	Passed
3/23/2012 5:03	NO_X	S	414.8	415	0	Passed
3/23/2012 5:03	NO_X	Z	0	0	0	Passed
3/24/2012 5:03	NO_X	S	414.8	415	0	Passed
3/24/2012 5:03	NO_X	Z	0	-1	1	Passed
3/25/2012 5:03	NO_X	S	414.8	415	0	Passed
3/25/2012 5:03	NO_X	Z	0	-1	1	Passed
3/26/2012 5:03	NO_X	S	414.8	414	1	Passed

Fluid Catalytic Cracking Unit (FCCU) EPN 42CB2201 Daily SO_2 and NO_x CEMS Drift Tests						
Date/Time	**Component**	**Type**	**Reference**	**Measurement**	**Difference**	**Pass/Fail**
3/26/2012 5:03	NO_X	Z	0	-1	1	Passed
3/27/2012 5:03	NO_X	S	414.8	414	1	Passed
3/27/2012 5:03	NO_X	Z	0	-1	1	Passed
3/28/2012 5:03	NO_X	S	414.8	415	0	Passed
3/28/2012 5:03	NO_X	Z	0	-1	1	Passed
3/29/2012 5:03	NO_X	S	414.8	417	2	Passed
3/29/2012 5:03	NO_X	Z	0	-1	1	Passed
3/30/2012 5:03	NO_X	S	414.8	418	3	Passed
3/30/2012 5:03	NO_X	Z	0	-1	1	Passed
3/31/2012 5:03	NO_X	S	414.8	418	3	Passed
3/31/2012 5:03	NO_X	Z	0	-1	1	Passed
4/1/2012 5:03	NO_X	S	414.8	419	4	Passed
4/1/2012 5:03	NO_X	Z	0	0	0	Passed
4/2/2012 5:03	NO_X	S	414.8	416	1	Passed
4/2/2012 5:03	NO_X	Z	0	0	0	Passed
4/3/2012 5:03	NO_X	S	414.8	419	4	Passed
4/3/2012 5:03	NO_X	Z	0	0	0	Passed
4/4/2012 5:03	NO_X	S	414.8	418	3	Passed
4/4/2012 5:03	NO_X	Z	0	0	0	Passed
4/5/2012 5:03	NO_X	S	414.8	417	2	Passed
4/5/2012 5:03	NO_X	Z	0	0	0	Passed
4/6/2012 5:03	NO_X	S	414.8	417	2	Passed
4/6/2012 5:03	NO_X	Z	0	0	0	Passed
4/7/2012 5:03	NO_X	S	414.8	414	1	Passed
4/7/2012 5:03	NO_X	Z	0	0	0	Passed
4/8/2012 5:03	NO_X	S	414.8	414	1	Passed
4/8/2012 5:03	NO_X	Z	0	0	0	Passed
4/9/2012 5:03	NO_X	S	414.8	414	1	Passed
4/9/2012 5:03	NO_X	Z	0	0	0	Passed
4/10/2012 5:03	NO_X	S	414.8	415	0	Passed
4/10/2012 5:03	NO_X	Z	0	0	0	Passed
4/11/2012 5:03	NO_X	S	414.8	415	0	Passed
4/11/2012 5:03	NO_X	Z	0	-1	1	Passed
4/12/2012 5:03	NO_X	S	414.8	415	0	Passed
4/12/2012 5:03	NO_X	Z	0	0	0	Passed
4/13/2012 5:03	NO_X	S	414.8	416	1	Passed
4/13/2012 5:03	NO_X	Z	0	-1	1	Passed
4/14/2012 5:03	NO_X	S	414.8	417	2	Passed

Fluid Catalytic Cracking Unit (FCCU) EPN 42CB2201 Daily SO_2 and NO_x CEMS Drift Tests						
Date/Time	**Component**	**Type**	**Reference**	**Measurement**	**Difference**	**Pass/Fail**
4/14/2012 5:03	NO_X	Z	0	-1	1	Passed
4/15/2012 5:03	NO_X	S	414.8	420	5	Passed
4/15/2012 5:03	NO_X	Z	0	-1	1	Passed
4/16/2012 5:03	NO_X	S	414.8	419	4	Passed
4/16/2012 5:03	NO_X	Z	0	-1	1	Passed
4/17/2012 5:03	NO_X	S	414.8	418	3	Passed
4/17/2012 5:03	NO_X	Z	0	-1	1	Passed
4/18/2012 5:03	NO_X	S	415.9	418	2	Passed
4/18/2012 5:03	NO_X	Z	0	0	0	Passed
4/19/2012 5:03	NO_X	S	415.9	418	2	Passed
4/19/2012 5:03	NO_X	Z	0	0	0	Passed
4/20/2012 5:03	NO_X	S	415.9	419	3	Passed
4/20/2012 5:03	NO_X	Z	0	0	0	Passed
4/21/2012 5:03	NO_X	S	415.9	417	1	Passed
4/21/2012 5:03	NO_X	Z	0	0	0	Passed
4/22/2012 5:03	NO_X	S	415.9	392	24	Passed
4/22/2012 5:03	NO_X	Z	0	1	1	Passed
4/23/2012 5:03	NO_X	S	415.9	382	34	Failed
4/23/2012 5:03	NO_X	Z	0	1	1	Passed
4/23/2012 6:08	NO_X	S	415.9	421	5	Passed
4/23/2012 6:08	NO_X	Z	0	1	1	Passed
4/24/2012 5:03	NO_X	S	415.9	451	35	Failed
4/24/2012 5:03	NO_X	Z	0	0	0	Passed
4/24/2012 6:46	NO_X	S	415.9	418	2	Passed
4/24/2012 6:46	NO_X	Z	0	0	0	Passed
4/25/2012 5:03	NO_X	S	415.9	460	44	Failed
4/25/2012 5:03	NO_X	Z	0	0	0	Passed
4/25/2012 5:52	NO_X	S	415.9	417	1	Passed
4/25/2012 5:52	NO_X	Z	0	0	0	Passed
4/26/2012 5:03	NO_X	S	415.9	424	8	Passed
4/26/2012 5:03	NO_X	Z	0	0	0	Passed
4/27/2012 5:03	NO_X	S	415.9	426	10	Passed
4/27/2012 5:03	NO_X	Z	0	0	0	Passed
4/28/2012 5:03	NO_X	S	415.9	428	12	Passed
4/28/2012 5:03	NO_X	Z	0	0	0	Passed
4/29/2012 5:03	NO_X	S	415.9	427	11	Passed
4/29/2012 5:03	NO_X	Z	0	0	0	Passed
4/30/2012 5:03	NO_X	S	415.9	426	10	Passed

Fluid Catalytic Cracking Unit (FCCU) EPN 42CB2201 Daily SO_2 and NO_x CEMS Drift Tests						
Date/Time	**Component**	**Type**	**Reference**	**Measurement**	**Difference**	**Pass/Fail**
4/30/2012 5:03	NO_X	Z	0	0	0	Passed
5/1/2012 5:03	NO_X	S	415.9	425	9	Passed
5/1/2012 5:03	NO_X	Z	0	0	0	Passed
5/2/2012 5:03	NO_X	S	415.9	427	11	Passed
5/2/2012 5:03	NO_X	Z	0	0	0	Passed
5/3/2012 5:03	NO_X	S	415.9	428	12	Passed
5/3/2012 5:03	NO_X	Z	0	0	0	Passed
5/4/2012 5:03	NO_X	S	415.9	428	12	Passed
5/4/2012 5:03	NO_X	Z	0	0	0	Passed
5/5/2012 5:03	NO_X	S	415.9	417	1	Passed
5/5/2012 5:03	NO_X	Z	0	0	0	Passed
5/6/2012 5:03	NO_X	S	415.9	418	2	Passed
5/6/2012 5:03	NO_X	Z	0	0	0	Passed
5/7/2012 5:03	NO_X	S	415.9	418	2	Passed
5/7/2012 5:03	NO_X	Z	0	0	0	Passed
5/8/2012 5:03	NO_X	S	415.9	417	1	Passed
5/8/2012 5:03	NO_X	Z	0	0	0	Passed
5/9/2012 5:03	NO_X	S	415.9	415	1	Passed
5/9/2012 5:03	NO_X	Z	0	0	0	Passed
5/10/2012 5:03	NO_X	S	415.9	417	1	Passed
5/10/2012 5:03	NO_X	Z	0	0	0	Passed
5/11/2012 5:03	NO_X	S	415.9	414	2	Passed
5/11/2012 5:03	NO_X	Z	0	0	0	Passed
5/12/2012 5:03	NO_X	S	415.9	410	6	Passed
5/12/2012 5:03	NO_X	Z	0	0	0	Passed
5/13/2012 5:03	NO_X	S	415.9	410	6	Passed
5/13/2012 5:03	NO_X	Z	0	0	0	Passed
5/14/2012 5:03	NO_X	S	415.9	410	6	Passed
5/14/2012 5:03	NO_X	Z	0	0	0	Passed
5/15/2012 5:03	NO_X	S	415.9	411	5	Passed
5/15/2012 5:03	NO_X	Z	0	0	0	Passed
5/16/2012 5:03	NO_X	S	415.9	413	3	Passed
5/16/2012 5:03	NO_X	Z	0	0	0	Passed
5/17/2012 5:03	NO_X	S	415.9	414	2	Passed
5/17/2012 5:03	NO_X	Z	0	0	0	Passed
5/18/2012 5:03	NO_X	S	415.9	410	6	Passed
5/18/2012 5:03	NO_X	Z	0	1	1	Passed
5/19/2012 5:03	NO_X	S	415.9	414	2	Passed

Fluid Catalytic Cracking Unit (FCCU) EPN 42CB2201 Daily SO_2 and NO_X CEMS Drift Tests						
Date/Time	**Component**	**Type**	**Reference**	**Measurement**	**Difference**	**Pass/Fail**
5/19/2012 5:03	NO_X	Z	0	1	1	Passed
5/20/2012 5:03	NO_X	S	415.9	414	2	Passed
5/20/2012 5:03	NO_X	Z	0	0	0	Passed
5/21/2012 5:03	NO_X	S	415.9	395	21	Passed
5/21/2012 5:03	NO_X	Z	0	1	1	Passed
5/22/2012 5:03	NO_X	S	415.9	408	8	Passed
5/22/2012 5:03	NO_X	Z	0	1	1	Passed
5/23/2012 5:03	NO_X	S	415.9	417	1	Passed
5/23/2012 5:03	NO_X	Z	0	0	0	Passed
5/24/2012 5:03	NO_X	S	415.9	407	9	Passed
5/24/2012 5:03	NO_X	Z	0	0	0	Passed
5/25/2012 5:03	NO_X	S	415.9	389	27	Failed
5/25/2012 5:03	NO_X	Z	0	1	1	Passed
5/25/2012 5:53	NO_X	S	415.9	417	1	Passed
5/25/2012 5:53	NO_X	Z	0	1	1	Passed
5/26/2012 5:03	NO_X	S	415.9	410	6	Passed
5/26/2012 5:03	NO_X	Z	0	1	1	Passed
5/27/2012 5:03	NO_X	S	415.9	412	4	Passed
5/27/2012 5:03	NO_X	Z	0	1	1	Passed
5/28/2012 5:03	NO_X	S	415.9	409	7	Passed
5/28/2012 5:03	NO_X	Z	0	1	1	Passed
5/29/2012 5:03	NO_X	S	415.9	417	1	Passed
5/29/2012 5:03	NO_X	Z	0	1	1	Passed
5/30/2012 5:03	NO_X	S	415.9	430	14	Passed
5/30/2012 5:03	NO_X	Z	0	0	0	Passed
5/31/2012 5:03	NO_X	S	415.9	425	9	Passed
5/31/2012 5:03	NO_X	Z	0	0	0	Passed
6/1/2012 5:03	NO_X	S	415.9	424	8	Passed
6/1/2012 5:03	NO_X	Z	0	0	0	Passed
6/2/2012 5:03	NO_X	S	415.9	413	3	Passed
6/2/2012 5:03	NO_X	Z	0	1	1	Passed
6/3/2012 5:03	NO_X	S	415.9	423	7	Passed
6/3/2012 5:03	NO_X	Z	0	1	1	Passed
6/4/2012 5:03	NO_X	S	415.9	423	7	Passed
6/4/2012 5:03	NO_X	Z	0	0	0	Passed
6/5/2012 5:03	NO_X	S	415.9	424	8	Passed
6/5/2012 5:03	NO_X	Z	0	0	0	Passed
6/6/2012 5:03	NO_X	S	415.9	426	10	Passed

Fluid Catalytic Cracking Unit (FCCU) EPN 42CB2201 Daily SO_2 and NO_x CEMS Drift Tests						
Date/Time	**Component**	**Type**	**Reference**	**Measurement**	**Difference**	**Pass/Fail**
6/6/2012 5:03	NO_X	Z	0	0	0	Passed
6/7/2012 5:03	NO_X	S	415.9	425	9	Passed
6/7/2012 5:03	NO_X	Z	0	0	0	Passed
6/8/2012 5:03	NO_X	S	415.9	425	9	Passed
6/8/2012 5:03	NO_X	Z	0	0	0	Passed
6/9/2012 5:03	NO_X	S	415.9	424	8	Passed
6/9/2012 5:03	NO_X	Z	0	0	0	Passed
6/10/2012 5:04	NO_X	S	415.9	427	11	Passed
6/10/2012 5:04	NO_X	Z	0	0	0	Passed
6/11/2012 5:03	NO_X	S	415.9	425	9	Passed
6/11/2012 5:03	NO_X	Z	0	0	0	Passed
6/12/2012 5:04	NO_X	S	415.9	426	10	Passed
6/12/2012 5:04	NO_X	Z	0	0	0	Passed
6/13/2012 5:03	NO_X	S	415.9	424	8	Passed
6/13/2012 5:03	NO_X	Z	0	0	0	Passed
6/14/2012 5:04	NO_X	S	415.9	425	9	Passed
6/14/2012 5:04	NO_X	Z	0	0	0	Passed
6/15/2012 5:03	NO_X	S	415.9	425	9	Passed
6/15/2012 5:03	NO_X	Z	0	0	0	Passed
6/16/2012 5:03	NO_X	S	415.9	423	7	Passed
6/16/2012 5:03	NO_X	Z	0	0	0	Passed
6/17/2012 5:03	NO_X	S	415.9	423	7	Passed
6/17/2012 5:03	NO_X	Z	0	0	0	Passed
6/18/2012 5:04	NO_X	S	415.9	424	8	Passed
6/18/2012 5:04	NO_X	Z	0	0	0	Passed
6/19/2012 5:03	NO_X	S	415.9	423	7	Passed
6/19/2012 5:03	NO_X	Z	0	0	0	Passed
6/20/2012 5:04	NO_X	S	415.9	406	10	Passed
6/20/2012 5:04	NO_X	Z	0	1	1	Passed
6/21/2012 5:03	NO_X	S	415.9	423	7	Passed
6/21/2012 5:03	NO_X	Z	0	0	0	Passed
6/21/2012 11:11	NO_X	S	405.7	406	0	Passed
6/21/2012 11:11	NO_X	Z	0	0	0	Passed
6/22/2012 5:04	NO_X	S	405.7	405	1	Passed
6/22/2012 5:04	NO_X	Z	0	0	0	Passed
6/23/2012 5:03	NO_X	S	405.7	405	1	Passed
6/23/2012 5:03	NO_X	Z	0	0	0	Passed
6/24/2012 5:04	NO_X	S	405.7	405	1	Passed

Fluid Catalytic Cracking Unit (FCCU) EPN 42CB2201 Daily SO_2 and NO_X CEMS Drift Tests						
Date/Time	**Component**	**Type**	**Reference**	**Measurement**	**Difference**	**Pass/Fail**
6/24/2012 5:04	NO_X	Z	0	0	0	Passed
6/25/2012 5:03	NO_X	S	405.7	389	17	Passed
6/25/2012 5:03	NO_X	Z	0	1	1	Passed
6/26/2012 5:04	NO_X	S	405.7	382	24	Passed
6/26/2012 5:04	NO_X	Z	0	1	1	Passed
6/26/2012 5:54	NO_X	S	405.7	409	3	Passed
6/26/2012 5:54	NO_X	Z	0	1	1	Passed
6/27/2012 5:03	NO_X	S	405.7	402	4	Passed
6/27/2012 5:03	NO_X	Z	0	1	1	Passed
6/28/2012 5:04	NO_X	S	405.7	394	12	Passed
6/28/2012 5:04	NO_X	Z	0	1	1	Passed
6/29/2012 5:03	NO_X	S	405.7	392	14	Passed
6/29/2012 5:03	NO_X	Z	0	1	1	Passed
6/30/2012 5:04	NO_X	S	405.7	430	24	Passed
6/30/2012 5:04	NO_X	Z	0	0	0	Passed

GOLDEN SPECIALTY

The *GOLD STANDARD* for Air Testing

Air Quality Test Report

Annual Relative Accuracy Test Audit for O_2 and SO_2 CEMS

Valero Refining-Texas, L.P.
Houston, Texas

Sulfur Recovery Unit (SRU) C Incinerator – Unit 39

NSR Permit for SRUs 2507A; Operating Permit No.: O1381; EPN: 39CB2001

Report Number: 12VALH171
Date Tested: March 21, 2012
Date Prepared: April 9, 2012

PREPARED FOR
Valero Refining – Texas, L.P.
Houston Refinery
9701 Manchester Road
Houston, Texas 77012

Phone 713.924.1524

Prepared by:
GOLDEN SPECIALTY, INC.
888.472.9898
goldenspecialty.com

Air Quality Test Report

Annual Relative Accuracy Test Audit for O_2 and SO_2 CEMS

Valero Refining-Texas, L.P.
Houston, Texas

Sulfur Recovery Unit (SRU) C Incinerator – Unit 39

This report is supported by GOLDEN's Quality Assurance Manual and ASTM D7036 Interim Accreditation as an Air Emission Testing Body. The information included in the report is authentic and accurate to the best of our knowledge.

Certified by:

for

Scott B. Swiggard, Ph.D., QSTI 2006-025
Technical Director

Daniel A. Loubiere, QSTI 2008-128
Project Manager / Onsite QSTI

TABLE OF CONTENTS

EXECUTIVE SUMMARY 1
TABLE 1-1. SRU C INCINERATOR CEMS ANALYZERS 1
TABLE 1-2. CEMS RATA RESULTS VS. ALLOWABLE. 1
INTRODUCTION 2
PURPOSE OF TEST 2
RELATIVE ACCURACY TEST AUDIT (RATA) 2
PROBLEMS, DEVIATIONS AND/OR EXCEPTIONS 2
PERFORMANCE TEST PROCEDURES 3
INSTRUMENTAL ANALYZER PROCEDURE 3
SAMPLING SYSTEM 3
ANALYZER CALIBRATION 3
ANALYZER CALIBRATION ERROR 4
SYSTEM BIAS CHECK 4
ANALYZER DRIFT 4
RESPONSE TIME 5
USEPA REFERENCE METHODS 5
USEPA METHOD 3A: OXYGEN AND CARBON DIOXIDE ANALYSIS (INSTRUMENTAL PROCEDURE) 5
USEPA METHOD 6C: SULFUR DIOXIDE ANALYSIS (INSTRUMENTAL PROCEDURE) 5
FIGURE 1-1. SAMPLING SYSTEM SCHEMATIC 6
USEPA METHOD 205: GAS DILUTION VERIFICATION 7
SOURCE INFORMATION 8
FIGURE 1-2. DIAGRAM OF TESTING LOCATION 8
SAMPLE CALCULATIONS 9
TABLE 1-3. SRU C INCINERATOR RM AND CEMS DATA FOR SO_2 IN PPMVD @ 0% O_2 9
RELATIVE ACCURACY CALCULATIONS 9
DETERMINATION OF AVERAGE DIFFERENCE (D_{AVG}) 9
DETERMINATION OF STANDARD DEVIATION (S_D) 9
DETERMINATION OF CONFIDENCE COEFFICIENT 10
DETERMINATION OF RELATIVE ACCURACY 10
DETERMINATION OF ALTERNATE RELATIVE ACCURACY FOR SO_2 10
DETERMINATION OF RELATIVE ACCURACY FOR O_2 10
CALIBRATION CORRECTION 11
CONCENTRATION (CORRECTED TO 0% O_2) 11
TEST RESULTS 12
TABLE 1-2. CEMS RATA RESULTS VS. ALLOWABLE. 12
TABLE 1-4. SRU C INCINERATOR CEMS RATA RESULTS 13
APPENDIX A – TESTING EQUIPMENT ..... A
TABLE 1-5. TESTING EQUIPMENT USED ..... A
APPENDIX B – RESUMES ..... B
APPENDIX C – CALIBRATION DATA C
APPENDIX D – FIELD DATA ..... D
APPENDIX E – REFERENCE METHOD DATA ..... E
APPENDIX F – CEMS DATA ..... F

GOLDEN SPECIALTY

Air Quality Test Report

EXECUTIVE SUMMARY

On March 21, 2012, Golden Specialty, Inc. (GOLDEN) was contracted by Valero Refining-Texas, L.P., to perform air testing at their facility located in Houston, Texas. GOLDEN was contracted to perform an annual relative accuracy test audit (RATA) on a continuous emissions monitoring system (CEMS) located on the Sulfur Recovery Unit (SRU) C Incinerator exhaust stack. The measured parameters were oxygen (O_2) and sulfur dioxide (SO_2). The test was conducted in accordance with all appropriate United States Environmental Protection Agency (USEPA) Methodologies; as well as all applicable Texas Commission on Environmental Quality (TCEQ) mandates.

The purpose of the tests performed was to provide RATA results for demonstrating compliance of the CEMS with the applicable regulations, 40 CFR 60, Appendix B, Performance Specifications 2 and 3 O_2 and SO_2 CEMS. See Table 1-1 below for specifics on CEMS numbers and ranges for each CEMS component.

Component	Make/Model	Serial Number	Range
O_2	AMETEK / 2000	10209586	0-25 %
SO_2	Western Research / 921CE	AD-921-9816-2	0-500 ppm

Table 1-1. SRU C Incinerator CEMS Analyzers

The relative accuracy (RA) for each compound was based on data calculated on nine (9) twenty-one minute runs. A total of twelve (12) runs were performed, with the results of the three (3) runs with the highest deviation being discarded. All RA runs are presented in this report. The calculated RA results presented below. The RA for SO_2 was calculated using concentrations in terms of part per million by volume, dry basis (ppmvd) corrected to 0% O_2. The RA results for O_2 are on a dry percent (%) basis. During the RATA test program, the SRU C Incinerator was operated at or near a production rate of 123 Long Tons per Day, which is 49.8% of its maximum rated capacity (247 Long Tons per Day).

RATA Calculations Nine - 21 minute average		
	SO_2 (ppmvd @ 0% O_2)	O_2 (%)
D-Bar=	4.144	0.203
Sigma-D=	10.267	0.181
CC=	7.892	0.139
RA (%RM)	10.23%	0.203
App. Std.	250.0	
RA(%ES)	4.81%	
RA Limit	10% App. Std.	1% O2
PASS RA?	YES!	YES!

Table 1-2. CEMS RATA Results vs. Allowable.

Based on the results shown in this report, the CEMS installed on the SRU C Incinerator is operating within the limits of the Code of Federal Regulations, 40 CFR 60 Appendix B as applicable.

INTRODUCTION

Purpose of Test

The purpose of the test conducted on the SRU C Incinerator was to verify that the CEMS, which was installed to continuously monitor emissions of O_2 and SO_2, were operating within the limitations set forth in the CFR and the Texas Administrative Code (30 TAC). The tolerances to be met for the RA portion of this test program are set forth in the Performance Specifications (PS) section of The Code of Federal Regulations, Title 40, Part 60 (40 CFR 60) Appendix B for O_2 and SO_2 CEMS. Mr. Dan Loubiere managed the project and performed the testing, with the assistance of Mr. Bryan Johnson, according to all applicable state and federal regulations.

Relative Accuracy Test Audit (RATA)

During the RATA performance tests, the exhaust gas stream was analyzed for the targeted pollutant and diluent gas concentrations. This sampling was conducted according to USEPA Reference Methods 3A and 6C for determination of O_2 and SO_2, respectively. These methods utilize instrument analysis to determine the gaseous concentrations for the required constituents within the stack. Method 205 was used for the verification of the gas dilution system used for this test program. The reference methods are discussed in greater detail in the Performance Test Procedures section of this report.

The RATA testing consisted of drawing a representative sample of the exhaust gas stream into a conditioning system for removal of moisture. The sample was then allowed to pass into a set of hardware reference method (RM) analyzers, where the concentrations of the targeted pollutant and diluent gas concentrations were measured. These instantaneous readings were compiled in a data acquisition system (DAS) data based on a one-minute-average basis for comparison to the CEMS data. Reference methods employed for each of the targeted gases are described in the Performance Test Procedures section of this report.

The CEMS provides a record of the pollutant and diluent gas concentration data from the subject flue gas stream. This data was subsequently compared to the RM data for determination of the relative accuracy (RA) of the CEMS. The RA calculations are discussed in greater detail in the Sample Calculations section of this report.

GOLDEN utilized a single sampling system for the performance of this Test Program. The sampling system (System One) was utilized for relative accuracy (RA) determinations of O_2 and SO_2. The RA for SO_2 was calculated using concentrations in terms of part per million by volume, dry basis (ppmvd) corrected to 0% O_2. The RA results for O_2 are on a dry percent (%) basis.

Problems, Deviations and/or Exceptions

The time clock for the SRU C Incinerator CEMS did not reflect the Daylight Savings time change, therefore the DAS clock was adjusted to coincide with the CEMS time.

PERFORMANCE TEST PROCEDURES

Instrumental Analyzer Procedure

Stack gas emissions of O_2 and SO_2 from the source were measured with RM analyzers. These tests were performed in accordance with the applicable regulations, as outlined in Title 40, Part 60, Appendix A of the Code of Federal Regulations. All field data collected during the testing and photocopies of the actual O_2 and SO_2 one-minute averaging are provided in this report.

Sampling System

A gas sample was continuously extracted from the source with a stainless steel probe and channeled through a heated sample line to a gas sample conditioner. The entire sample extraction and delivery system was maintained at a temperature above 225°F to the point the sample enters the sample conditioner. The sample conditioner was employed to decrease the dewpoint of the combustion gases to a repeatable, stable, low dew point. Condensed moisture was continuously removed from the sample conditioner by peristaltic pump and drained. The conditioned gas then traveled through a network of ¼-inch Teflon® tubing to a manifold in the mobile laboratory. From the manifold, the sample was directed to a set of rotometers, where the flow of the sample gas into the analyzers was maintained at approximately 1 liter per minute (L/min).

Analyzer Calibration

The calibration of the instruments was performed using Protocol certified gas standards composed of a known concentration of the given component in zero-grade nitrogen. A copy of the certification standards for each of the certified calibration standards used during the testing is included in Appendix C. All of the values obtained during the calibration process, including analyzer calibration, system bias analysis, and drift values, can be found in Appendix C of this report. The analyzer calibration procedures are identical, regardless of the constituent being evaluated by each analyzer. The range used for each analyzer was determined based on the expected concentration levels of the flue gas stream.

The first step in the analyzer calibration was to set the zero point on the analyzer using zero-grade nitrogen. The nitrogen is introduced directly to the back of each analyzer, and the zero potentiometer on the analyzer is adjusted until the proper output from the analyzer is realized. Next, a high-range calibration gas is introduced to each analyzer, with a concentration within the appropriate range of the instrument. The span potentiometer on each analyzer is then adjusted until the output from the analyzer corresponds to the value of the calibration standard. Finally, a mid-range calibration standard with a concentration approximately one-half of the high-range calibration standard is used to determine the linearity of the analyzer within the given range. For certain constituents, more than one mid-range value is required. The specific requirements for each constituent are discussed later in this section.

Analyzer Calibration Error

The Analyzer Calibration Error (ACE) is the difference between the gas concentration exhibited by the gas analyzer and the concentration of the calibration gas when introduced directly to the analyzer. The maximum allowable variance for the zero, mid-range, and high-range calibration gases is ± 2% of the span. The calibration values and corresponding percent errors associated with this project can be found in Appendix C of this report, and is determined by the following equation.

$$ACE = \left(\frac{Analyzer\ Response - Cylinder\ Value}{Calibration\ Span} \right) x100$$

System Bias Check

Following the analyzer calibration procedure, a second test is required to determine the amount of bias the sampling system has on the calibration standard concentrations. In this procedure, the same calibration standards that were used to perform the analyzer calibration error test are introduced to the sampling system via a separate network of ¼-inch Teflon® tubing. The calibration gases are allowed to flood the system via a "t" connection at the end of the sample probe at a rate of approximately 2 L/min higher than the sample rate. The excess calibration gas flows out the tip of the probe, preventing stack gas from being drawn into the sampling system during calibrations. The gas is then drawn back through the system by the conditioning pumps, and is introduced to the analyzers. The output from the analyzers is recorded, without adjusting the zero or span potentiometers. The bias created by the sampling system is then determined by the following equation.

$$Bias = \left(\frac{System\ Response - Calibration\ Error\ Response}{Calibration\ Span} \right) x100$$

The maximum allowable system bias for any one analyzer is ±5% of the corresponding span value. The values determined for this portion of the calibration procedure can be found in Appendix C of this report.

Analyzer Drift

Utilizing the data obtained during the post-test bias check, a third test is performed to determine the amount of drift experienced during the test run. The analyzer response from the post-test system bias check is compared to the pre-test response for the same calibration standard for drift determinations. If the drift value is greater than the allowable value, the test run is considered invalid and the analyzers must be re-calibrated before continuing the test. The drift for each constituent is determined using the equation below.

$$Drift = \left(\frac{\left| Final\ System\ Calibration\ Response - Initial\ System\ Calibration\ Response \right|}{Calibration\ Span} \right) x100$$

The maximum allowable calibration drift for any one analyzer is 3% of the span over the period of each run. The values determined for this portion of the calibration procedure can be found in Appendix C of this report.

Response Time

System response times for each analyzer were determined during the initial pretest bias prior to run number 1. The response time is determined by the length of time it takes the analyzer response to be within 95% or 0.5 ppm (whichever is less restrictive) of the certified gas concentration. The start of each run was a minimum of twice the response time following the completion of calibration checks.

USEPA Reference Methods

This section provides a detailed description of the individual USEPA Reference Methods employed in this test (40 CFR 60, Appendix A). A schematic of the sampling system used to perform the test program on the SRU C Incinerator can be found in Figure 1-1. Specifics for each analyzer utilized in this test program are presented in Appendix A.

USEPA Method 3A: Oxygen and Carbon Dioxide Analysis (Instrumental Procedure)

This method was employed to determine the concentration of O_2 in the flue gas stream with the use of analytical instruments. A sample was continuously extracted from the stack and introduced to a RM analyzer for determination of concentration. The minimum detection limit for this instrument is one-hundredth of one percent (0.01%). The instrument is connected to a DAS computer via an analog-to-digital converter for recording resulting values, and the data was recorded in one-minute averages. Zero-grade nitrogen and USEPA Protocol-1 calibration standards were used to calibrate the analytical instrument. The general guidelines for the calibration of a RM analyzer are described above, with the specifics pertaining to the calibration of an O_2 analyzer being set forth in USEPA Method 3A (40 CFR Part 60, Appendix A).

USEPA Method 6C: Sulfur Dioxide Analysis (Instrumental Procedure)

This method was employed to determine the concentration of SO_2 present in the exhaust gas stream. A sample was continuously extracted from the stack and introduced to a RM analyzer for determination of concentration. The minimum detection limit of this analyzer is 0.1 ppm. An analog-to-digital converter connected to a laptop computer directed the resulting values, where the data was recorded in one-minute averages. Zero-grade nitrogen and USEPA Protocol-1 calibration standards were used to calibrate the analytical instrument. The general guidelines for the calibration of a RM analyzer are described above, with the specifics pertaining to the calibration of a SO_2 analyzer being set forth in USEPA Method 6C (40 CFR Part 60, Appendix A).

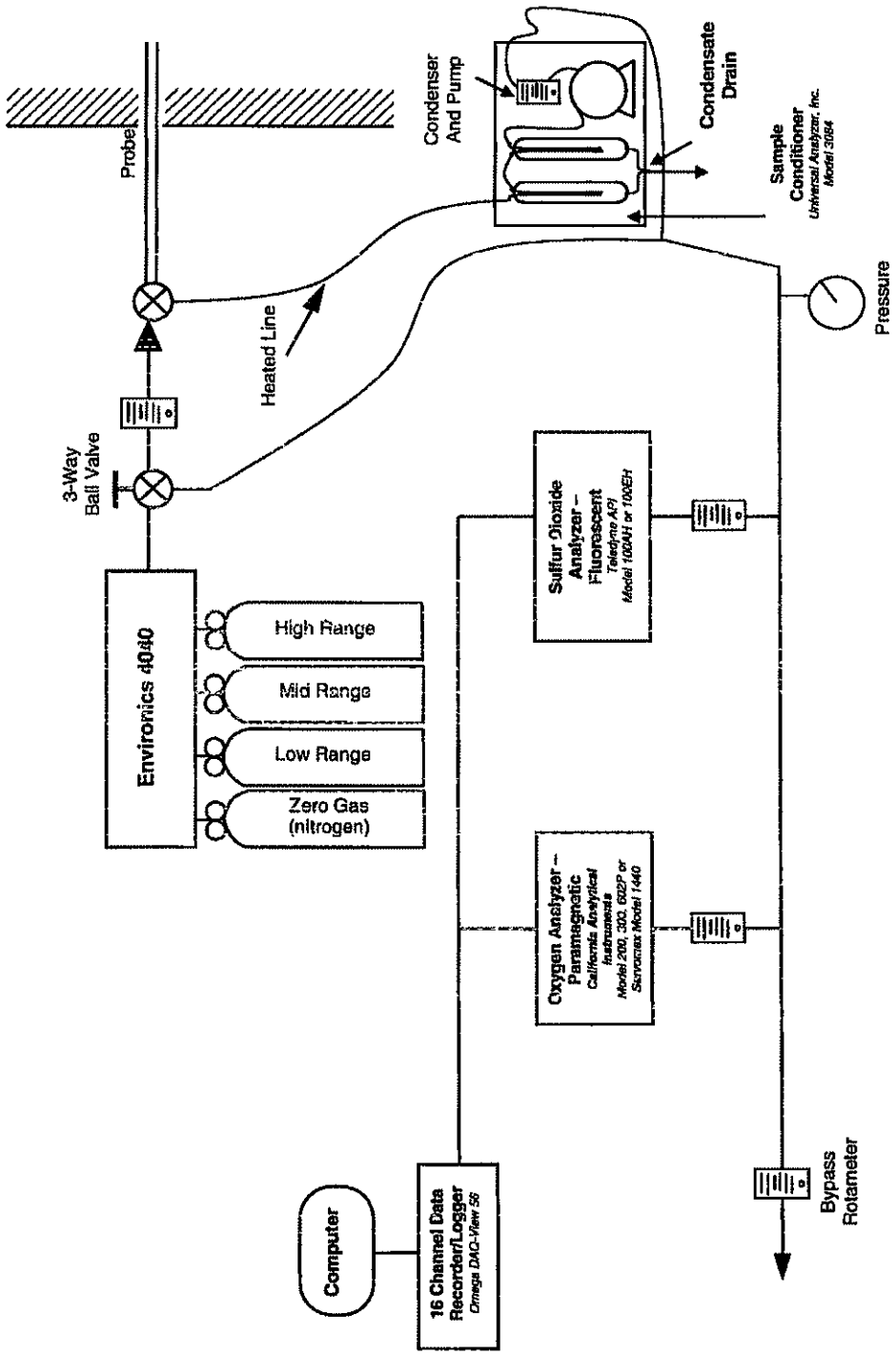

Figure 1-1. Sampling System Schematic

USEPA Method 205: Gas Dilution Verification

All diluted calibration standards were prepared using an Environics Model 4040 Dilution System, which was verified by a field evaluation at the job site prior to testing, following the requirements for USEPA Method 205.

A Servomex Model 1440 O_2 analyzer was calibrated following USEPA Method 3A procedures. After the calibration procedure is completed, diluted mid and high range standards and a mid-range USEPA Protocol 1 Standard was alternately introduced, in triplicate, and an average instrument response was calculated for each standard. No single response can differ by more than ± 2% from the average response for each standard.

The difference between the instrument average and the predicted concentration must be ± 2% for each standard. The difference between the certified gas concentration and the average instrument response for the mid-range USEPA Protocol 1 Standard must be less than ± 2%. Complete documentation of the USEPA Method 205 Dilution System Verification is provided in Appendix C of this report.

SOURCE INFORMATION

The purpose of the Sulfur Recovery Unit (SRU) is to process the hydrogen sulfide bearing gas (acid gas) from the amine regeneration unit and sour water stripping (SWS) unit. Approximately 96% of the feed is converted and recovered and elemental sulfur.

The testing location on the SRU C Incinerator Exhaust Stack consisted of two 4.0-inch diameter port on a 65.75 inch diameter circular stack. The sample port was positioned a distance of 67.0 feet upstream and 11.0 feet downstream from the nearest disturbances. This meets the requirements established in the Code of Federal Regulations for sample locations.

Traversing was performed at the sample points identified below in Figure 1-2. Data for System One is presented in Appendix E and may be compared minute by minute for the referenced test periods.

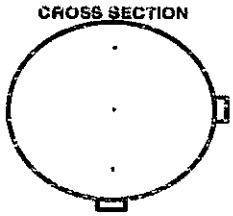

TRAVERSE POINTS: 3
NUMBER OF PORTS: 1
POINTS/PORT: 3
STACK ID: 65.75 in.
PORT LENGTH: 8.0 in.

TRAVERSE POINT NO.	DISTANCE FROM INSIDE WALL, in.
1	11.0
2	32.9
3	54.8

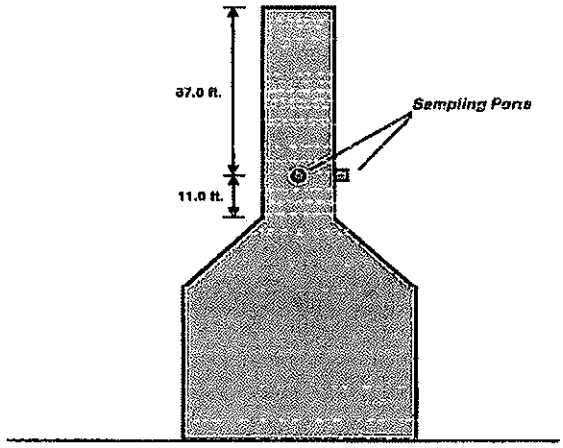

Figure 1-2. Diagram of Testing Location

SAMPLE CALCULATIONS

The following calculations were used in the determination of the relative accuracy for any one constituent being evaluated. The values listed in Table 1-3 below are the actual CEMS and RM SO_2 data obtained during the test. The units are in ppmvd @ 0% O_2.

Run #	1	2	3	4	5	6	7	8	9	10	11	12
C_{RM}	117.60	105.14	103.33	108.42	117.93	133.48	132.20	126.68	149.89	134.23	113.57	125.87
C_{CEMS}	100.58	99.13	99.13	108.67	126.71	115.96	127.21	139.33	127.02	108.58	104.34	104.13
D_i *	17.02	6.01	4.20	-0.24	-8.78	17.52	5.00	-12.65	22.87	25.65	9.23	21.74

* The nine lowest differences betweem RM and CEMS Data were used in determination of relative accuracy.

Table 1-3. SRU C Incinerator RM and CEMS Data for SO_2 in ppmvd @ 0% O_2

Relative Accuracy Calculations

Determination of Average Difference (d_{avg})

$$\overline{d} = \left[\frac{1}{n}\sum_{i=1}^{n} d_i\right]$$

Where:

d = Average difference between RM and CEMS data
n = Number of data points
d_i= Difference between RM and CEMS data for any given point

$$\overline{d} = \frac{1}{9}[d_1 + d_2 + d_3 + \ldots.]$$

$$\overline{d} = 4.144$$

Determination of Standard Deviation (S_d)

$$S_d = \left[\frac{\sum_{i=1}^{n} d_i^2 - \frac{\left(\sum_{i=1}^{n} d_i\right)^2}{n}}{n-1}\right]^{1/2}$$

$$\underline{S_d} = 10.267$$

Determination of Confidence Coefficient

$$CC = \left[\frac{(t_{0.975})(S_d)}{\sqrt{n}}\right]$$

Where:

$t_{0.975}$ = t- value ($t_{0.975}$ = 2.306)
S_d = Standard deviation
n = Number of data points = 9

CC = 7.892

Determination of Relative Accuracy

$$RA = \left[\frac{|\bar{d}| + |CC|}{RM_{avg}}\right] x100\%$$

RA = 10.23%

Determination of Alternate Relative Accuracy for SO_2

$$ALT\ RA = \left[\frac{|\bar{d}| + |CC|}{App.\ Std.}\right] x100\%$$

ALT RA = 4.81%

Determination of Relative Accuracy for O_2

$$RA = |\bar{d}|$$

Where:

$\bar{d}$ = Average difference between RM and CEMS data.
d_i = Difference between RM and CEMS data for any given point

$$\bar{d} = \frac{1}{9}[d_1 + d_2 + d_3 + ...]$$

RA for O_2= 0.203

Calibration Correction

$$C_{gas} = (\overline{C} - C_o)(\frac{C_{ma}}{C_m - C_o})$$

Where:

C_{gas} = *Effluent gas concentration (ppmvd)*
C = *Average gas concentration of gas analyzer (ppmvd)*
C_o = *Average of initial and final system calibration bias check responses for zero gas (ppmvd)*
C_m = *Average of initial and final system calibration bias check responses for the upscale calibration gas (ppmvd)*
C_{ma} = *Actual concentration of the upscale calibration gas (ppmvd)*

Concentration (Corrected to 0% O_2)

$$C_{ppmvd\ @\ 0\%\ O_2} = C_{ppmvd}\ x\left(\frac{20.9}{20.9 - \%\ O_2}\right)$$

TEST RESULTS

The RATA results for the SRU C Incinerator are listed on the following pages. The RA results for SO_2 are listed on a ppmvd corrected to 0% O_2 basis, and the O_2 results are shown as a dry percent (%). The limitations for each parameter are presented below with the results. Based on these limitations the SRU C Incinerator CEMS is operating within the relative accuracy limitations established.

RATA Calculations Nine - 21 minute average		
	SO_2 (ppmvd @ 0% O_2)	O_2 (%)
D-Bar=	4.144	0.203
Sigma-D=	10.267	0.181
CC=	7.892	0.139
RA (%RM)	10.23%	0.203
App. Std.	250.0	
RA(%ES)	4.81%	
RA Limit	10% App. Std.	1% O2
PASS RA?	**YES!**	**YES!**

Table 1-2. CEMS RATA Results vs. Allowable.

GOLDEN SPECIALTY

Air Quality Test Report

		RATA Reference Method Data			CEMS Data		
RUN #	Start Time	SO_2 (ppmvd)	SO_2 (ppmvd @ 0% O_2)	O_2 (%)	SO_2 (ppmvd)	SO_2 (ppmvd @ 0% O_2)	O_2 (%)
1	10:15	90.28	117.60	4.855	74.70	100.58	5.380
2	11:02	79.32	105.14	5.133	73.55	99.13	5.393
3	11:42	77.90	103.33	5.144	84.72	99.13	5.132
4	12:25	82.24	108.42	5.047	81.66	108.67	5.195
5	13:06	90.23	117.93	4.909	96.14	126.71	5.042
6	13:47	100.66	133.48	5.140	87.51	115.96	5.131
7	14:28	101.67	132.20	4.827	95.17	127.21	5.260
8	15:08	96.85	126.68	4.921	105.65	139.33	5.059
9	15:48	114.10	149.89	4.990	94.80	127.02	5.294
10	16:29	101.74	134.23	5.059	81.55	108.58	5.207
11	17:09	85.98	113.57	5.077	77.93	104.34	5.284
12	17:51	95.59	125.87	5.029	77.49	104.13	5.347

	Difference		Used Sensor	
RUN #	SO_2 (ppmvd @ 0% O_2)	O_2 (%)	SO_2 (ppmvd @ 0% O_2)	O_2 (%)
1	17.02	-0.525	Y	Y
2	6.01	-0.260	Y	Y
3	4.20	0.011	Y	Y
4	-0.24	-0.148	Y	Y
5	-8.78	-0.133	Y	Y
6	17.52	0.008	Y	Y
7	5.00	-0.433	Y	Y
8	-12.65	-0.138	Y	Y
9	22.87	-0.305	N	N
10	25.65	-0.148	N	N
11	9.23	-0.207	Y	Y
12	21.74	-0.318	N	N
Total # Runs			9	9
t-value			2.30600	2.30600

RATA Calculations Nine - 21 minute average		
	SO_2 (ppmvd @ 0% O_2)	O_2 (%)
D-Bar=	4.144	0.203
Sigma-D=	10.267	0.181
CC=	7.892	0.139
RA (%RM)	10.23%	0.203
App. Std.	250.0	
RA(%ES)	4.81%	
RA Limit	10% App. Std.	1% O2
PASS RA?	YES!	YES!

Table 1-4. SRU C Incinerator CEMS RATA Results

APPENDIX A – Testing Equipment

Testing Equipment

Provided in the Table 1-5 below is a list of all testing equipment used in the in the determination of the RA of the SRU C Incinerator CEMS.

Golden Specialty, Inc.			
Trailer 10			
Constituent	**Make/ Model**	**Operating Range**	**Serial Number**
O_2_1	Servomex / 1440	0-25%	01440D1/4034
SO_2_1	Teledyne / 100EH	0-300 ppm	269
Gas Dilution	Environics / 4040	NA	3100

Table 1-5. Testing Equipment Used

APPENDIX B – Resumes

GOLDEN SPECIALTY

Air Quality Test Report

SCOTT B. SWIGGARD, Ph.D., QSTI
PRESIDENT / TECHNICAL DIRECTOR

Professional Experience Summary

- Broad background in environmental compliance and regulatory issues. Has directed projects associated with air permitting, groundwater contamination, air toxins emissions control, hazardous materials control and reporting, wastewater process control (metals removal), energy conservation, industrial ventilation, noise control, bioremediation, and storm water control.
- Extensive background in emission testing, with over 1,600 tests personally conducted and/or supervised.
- Responsible for the continued development of testing capabilities and their research and development.
- Provides project management for testing at assigned client's facilities. Provides field support to the project managers on testing protocols and methods.
- Responsible for verification and validation on test data as part of a Quality Assurance/ Quality Control Program.

Selected Publications/Presentations

Swiggard, Scott and Spellicy, Robert, PhD., FTIR Monitoring in High Water and Carbon Dioxide Environments. Presented at the 2003 Air and Waste Management Association 96th Annual Conference and Exhibition, San Diego, CA, June 22-26, 2003.

Swiggard, Scott B., Comparative study of NH3 analysis and methods for SCR Slippage. Presented at Source Evaluation Society Annual Meeting, Kiawah Island, North Carolina, 2004

Swiggard, Scott B., Identifying In-Stack Detection Limits and Handling of Non-Detect Data, Presented at Source Evaluation Society Annual Meeting, Rohnert Park California, 2005

Swiggard, Scott B., Why Cooling Towers and Vents matter in Texas!, Presented at Source Evaluation Society Annual Meeting, Hilton Head North Carolina, 2006

Swiggard, Scott B., How accurate are your standards?, Presented at Source Evaluation Society Annual Meeting, Hilton Head North Carolina, 2006

Swiggard, Scott B., Bonnette Sidney, PhD., and Palomarez Jorge., Gas Chromatography (GC) Analysis of HRVOC's in Cooling Towers and Vents; including degradation 1,3-Butadiene in the presence of NOx compounds, Presented at the GAS2006 Conference, Galveston, Texas, April 2006

Swiggard, S., McCulloch, R. Stack Testing for Dummies®, Golden Specialty Edition. Indianapolis: Wiley Publishing, 2011.

Professional Affiliations

Source Evaluation Society (SES) – QSTI I-IV #2006-025
Air and Waste Management Association (AWMA)
Source Testing Accreditation Council (STAC) – Member and Board of Directors
ASTM International, Voting Member D22, #395691

GOLDEN SPECIALTY

Air Quality Test Report

KAREN L. SWIGGARD

VICE PRESIDENT / DIRECTOR OF QUALITY ASSURANCE

Professional Work Summary

- Broad background in safety, environmental compliance and regulatory issues. Has managed projects associated with Hazard Communication, Blood borne pathogens, Tuberculosis Infection Control, Respiratory Projection, Personal Protective Equipment, Life Safety Code, Fire Safety, Electrical Safety, Back Injury Protection, Workplace Violence, Employee Injury and Illness Reporting, Emergency Response, Hazardous Drugs, Ventilation and Indoor Air Quality, and Joint Commission on Accreditation of Healthcare Organizations (JCAHO).
- Extensive background in employee Training in areas of: Hazard Communication, Blood borne pathogens, Tuberculosis Infection Control, Respiratory Projection, Personal Protective Equipment, Fire Safety, Electrical Safety, Back Injury Prevention, Emergency Response, and Computer Ergonomics.
- Developed and presented intensive training courses for Health and Safety professionals at all NASA centers including: Occupational Ergonomics and Blood borne Pathogens.
- While working for Texas Water Commission (now Texas Commission on Environmental Quality, TCEQ), she was responsible for the enforcement of RCRA program in Texas including the inspection and evaluation of RCRA programs at various chemical plants and other facilities handling hazardous waste. Was a key member for emergency response for chemical spills and accidents.
- Extensive experience in Quality Assurance programs including serving as Quality Assurance Officer for the Environmental Health Laboratory for NASA-Johnson Space Center for 5 years, and managing the environment of care accreditation process of Kelsey-Seybold, Houston Texas, for JCAHO in which it was awarded.

Work Experience

Golden Specialty, Inc. (February 1999 - present)
Position: Vice President / Director of Quality Assurance

Kelsey-Seybold Clinic (June 1995 – February 1999)
Position: Manager of Environmental Health and Safety

NASA-Johnson Space Center (April 1986 - June 1995)
Position: Health & Safety Training Specialist/Industrial Hygienist/Quality Assurance Officer

Texas Water Commission (February 1984 – April 1986)
Position: Environmental Quality Specialist

Professional Affiliations

Source Evaluation Society (SES)
National Environmental Laboratory Accreditation Commission (NELAC)
Air and Waste Management Association (AWMA)
American Industrial Hygiene Association (AIHA)

Education

Studies towards Masters in Science in Environmental Science, University of Houston
Bachelor of Science in Environmental Management, University of Houston, 1984
Source Sampling and CEMS Workshop, Walter Smith & Associates, 2002
NIOSH Quality Assurance Officer Training, 1990

GOLDEN SPECIALTY

Air Quality Test Report

DANIEL A. LOUBIERE, QSTI
PROJECT MANAGER

Professional Experience Summary

- Responsible for designing, planning and managing sampling programs, daily assignments of field testing crews, sample analysis, data reduction, QA/QC reviews, and reporting activities.
- Broad background in environmental compliance and regulatory issues. Extensive experience designing and managing test programs to meet federal, state and local compliance demonstration requirements.
- Participated in or supervised over 1,700 tests across the United States, including hazardous waste incinerator trial burns, continuous emission monitoring systems (CEMS) certification, and compliance testing.
- Sampling experience includes flow stream characterization and monitoring of a number of types of flow streams for engineering purposes; emissions sampling for regulatory compliance demonstration; emissions sampling for systems audit requirements of continuous emission monitoring systems (CEMS) and predictive emissions monitoring systems (PEMS).
- Developed and manufactured equipment to perform sampling for highly reactive volatile organic compounds (HRVOC) to comply with TCEQ Chapter 115 Subchapter H requirements. Experienced in modified El Paso Method, Appendix P, (Cooling Tower Sampling for Volatile Organic Compounds); applicable to sampling and troubleshooting leaks in process systems.
- Assist clients in troubleshooting and repairing existing emissions monitoring systems, or designing and implementing new systems.

Work Experience

Golden Specialty, Inc. (June 2007 - Present)
Position: Project Manager

ARI Environmental, Inc. (March 1994 – June 2007)
Position: South Central Regional Manager

Professional Affiliations

Source Evaluation Society (SES) – QSTI I-IV #2008-128
Air and Waste Management Association (AWMA)

Professional Education

24 Hour Hazwoper Training 29 CFR 1910.120
Preparation for the SES QSTI Exam Workshop, Walter Smith and Associates, 2007
Working on general education to be credited to a BS Degree in Environmental Science
Visible Emissions Certified (EPA Method 9)
Qualified Individual – Cylinder Gas Audits
Man-Lift Training, August 2006

GOLDEN SPECIALTY

Air Quality Test Report

GORDON L. GOSSETT, QSTI
PROJECT MANAGER, IT

Professional Experience Summary

- Responsible for coordinating/managing maintenance of all company facilities, grounds, vehicles, trailers, labs, and environmental equipment.
- Responsible for establishing and maintaining a quality control program to monitor key equipment assets and establishing a preventative maintenance process.
- Responsible for designing and building environmental equipment in-house and all equipment and testing supply purchasing.
- 20+ years of Supervisory experience in construction and maintenance.
- Experience in performing maintenance and calibrations on a variety of air testing equipment.
- Experience with EPA testing regulations, including 40 CFR, Part 60 and Part 75.
- CEM instrumentation projects include continuous analysis for carbon monoxide (CO), total oxides of nitrogen (NO_x), oxygen (O_2), and carbon dioxide (CO_2).
- Knowledgeable in methodologies for the testing and analysis of stack gas velocity and moisture content analysis.
- Knowledgeable in the testing requirements and procedures for the testing and analysis of Predictive Emissions monitoring systems (PEMS) and Continuous Emission Monitoring (CEMS).

Work Experience

Golden Specialty, Inc. (October 2003 - Present)
Position: Project Manager, IT

Brown & Root-Shell Chemical Complex (November 2002 – October 2003)
Position: Pipe Foreman

Brown & Root-Exxon Chemical Facility (April 2001 – October 2002)
Position: General Foreman

Encompass Industrial Services-Dow Chemical Company, Seadrift Operations (October 2000 – April 2001)
Position: Supervisor of Maintenance

Brown & Root-Union Carbide Plant (April 1986– October 2000)
Position: Supervisor, Welding Department (Shop & Field)

Professional Affiliations

Source Evaluation Society (SES) – QSTI III #2008-149

Education

Visible Emissions Certified (EPA Method 9)
Source Sampling and CEMS Workshop, Walter Smith & Associates, 2004
Skillpath Seminar-Emergency Response Planning, January 2004
American Welding Society Certified Welding Inspector, April 1998
8-Hr Training in Welding and Quality Control for the Petro-Chem Industry, November 1994
Certified Instructor for The Construction Education Foundation, July 1993
24-hr Training Course-Visual Testing, April 1993
16-hr Training Course-Liquid Penetrant Testing, October 1991
24-hr Radiographic Film Interpretation, May 1990
Victoria College, 1973-1974
Qualified Individual – TCEQ Method 3

GOLDEN SPECIALTY

Air Quality Test Report

SIDNEY B. BONNETTE, Ph.D., QI
SENIOR SCIENTIST

Professional Experience Summary

- Experienced with running and troubleshooting Varian NMR spectrometers and running complex 2D spectra.
- Knowledgeable experience with troubleshooting instrument, electrical, hardware, and software related problems on magnetic sector and MALDI mass spectrometers as well as gas chromatographs.
- Experienced with analysis of SO_2 titrations and spectophotometric applications,
- Proficient with several GC and GCMS methodologies, including Methods TO-14A and TO-15, Method 18 and ASTM 1946.
- GC – FID, TCD, FPD, HID, AED, sulfur, nitrogen (liquid, lpg and gas injectors) – HP 5890 and 6890, HP Chemstation, EZChrom; Micro GC; titrators, autotitrators – Mettler; Atomic Absorption; HPLC – Waters; Refinery Analysis – RFG (oxygenates by OFID, 3606 Benzene, etc.); Wasson OFID (plus in-house designed GC set-up); Polymer testing - Tensile strength, melt index, buoyant densities; Distillation apparatus;
- Famililiarized with USEPA Methods 8290, 1613, and 1668 for analysis of air, water, and soil samples containing dioxins and PCBs.
- Instruments worked on include HP, Agilent, and Carlos-Erba 8000 Gas Chromatographs, Micromass/Waters MALDI and Autospec mass spectrometers, and Perkins-Elmer MultiProbe II digestor robots.

Work Experience

Golden Specialty, Inc. (March 2006 – June 2007 / June 2010 - Present)
Position: Senior Chemist / Senior Scientist

Coyote Golf Carts (June 2007 – June 2010)
Position: Co-owner

Micromass / Waters Corp. (2001 – 2005)
Position: Field Service Engineer

University of New Orleans, Chemistry Department (1999 – 2001)
Position: Technical Specialist

Professional Affiliations

Source Evaluation Society (SES) – QI III

Professional Education

Bachelor of Science in Biochemistry, Louisiana State University, 1994
Doctorate of Science in Analytical Chemistry, University of New Orleans, 1999
Basic Plus Training (H.A.C.S.C.)
Qualified Individual – TCEQ Method 3

GOLDEN SPECIALTY

Air Quality Test Report

PAULA M. METZ, QSTI
REPORTS DEPARTMENT MANAGER

Professional Experience Summary

- Experience with EPA testing regulations, including 40 CFR, Part 60, Part 75, and Part 266, and TCEQ testing regulations, including 30TAC115, 30TAC117, and TCEQ Sampling Procedures Manual.
- Over 6 years of experience and participation in over 500 tests in Texas, Arkansas, Ohio, Mississippi, and Louisiana.
- CEM instrumentation projects include continuous analysis for carbon monoxide (CO), total oxides of nitrogen (NO_x), oxygen (O_2), carbon dioxide (CO_2), total hydrocarbons (THC), and sulfur dioxide (SO_2).
- Sampling experience includes flow stream characterization and monitoring of a number of types of flow streams for engineering purposes; including analysis using 3-D spherical probes per Method 2F, emissions sampling for regulatory compliance demonstration; emissions sampling for systems audit requirements of continuous emission monitoring systems (CEMS).
- Conducted isokinetic sampling and calculations for Methods 1, 1A, 2, 2A, 2F, 3, 3B, 4, and 5, including sample recovery, preservation, and storage at the test site with associate sample custody requirements for the methods listed.
- Knowledgeable in the testing requirements and procedures for the testing and analysis of Predictive Emissions Monitoring Systems (PEMS). Participated in several new source performance standards (NSPS) for development of new PEMS, including initial data collection of emissions.
- Experienced in modified El Paso Method, Appendix P, (Cooling Tower Sampling for Volatile Organic Compounds); applicable to monthly sampling and troubleshooting leaks in Process systems.
- Experienced in report writing, review, and finished product.

Work Experience

Golden Specialty, Inc. (February 2001 - Present)
Position: Reports Department Manager

Professional Affiliations

Source Evaluation Society (SES) – QSTI I-III #2006-026

Education

Associate of Arts – Chemistry, San Jacinto Community College, December 2010
Visible Emissions Certified (EPA Method 9), 2004-2007
12 Hour Basic Instrumentation Training, California Analytical Instruments, January 2003
Source Sampling and CEMS Workshop, Walter Smith & Associates, 2002, 2003 and 2004
Preparation for the SES QSTI Exam Workshop, Walter Smith and Associates, 2005
SkillPath® Seminars, Employee Management and Supervision Workshop, 2003
Hazardous Materials Shipping Qualified, 2006
Man-Lift Training, August 2006
Fred Pryor®:Team Building Seminar, 2007
Fred Pryor®:Excel: Beyond the Basics" Seminar, 2007
Qualified Individual – EPA Method 320 & ASTM 6348-03

GOLDEN SPECIALTY

Air Quality Test Report

BARBARA L. SCHMEITZ

RECORDS COMPLIANCE ANALYST

Professional Experience Summary

- Proficient in operating and maintaining ambient air quality sampling equipment.
- Proficient in collection, processing and analysis of meteorological and chemistry data. Species include carbon monoxide (CO), total oxides of nitrogen (NO_x), oxygen (O_2), carbon dioxide (CO_2), and sulfur dioxide (SO_2).
- Proficient in maintaining, preparing and launching of meteorological, ozone (O_3), and sulfur dioxide (SO_2) sampling equipment.
- Responsible for documenting and maintaining the tracking of project data and test reports.
- In training for data importation for PEMS and CEMS RATAs, as well as multiple compliance test projects.
- In training for report writing, review and finished product.
- Proficient in Microsoft Word, Excel, Power Point and Access.
- Proficient in Esri GIS software ArcMAP, ArcGIS and ArcView.
- Experienced in WaveMetrics scientific graphing, data analysis, image processing and programming software IGOR.
- Experienced in C++ and MATLAB programming
- Fluent in Dutch and English, experienced in German and French.

Work Experience

Golden Specialty, Inc. (February 2011 – Present)
Position: Records Compliance Analyst

University of Houston, IMAQS – Institute for Multi-Dimensional Air Quality Studies (January 2009 – February 2011)
Position: Research Technician

C. Hecht & Co. (Netherlands) (November 2002 – November 2004)
Position: Sales & Production Coordinator

Grafico (Netherlands) (October 2000 – October 2002)
Position: Sales & Production Coordinator

Grafico (Netherlands) (August 1997 – October 2000)
Position: Engraver

Education

Bachelors of Science – Environmental Science, Environmental Systems & Modeling, University of Houston, May 2010
Associates of Science – Engineering / Environmental Science, Houston Community College, August 2007

GOLDEN SPECIALTY

Air Quality Test Report

BRYAN JOHNSON
ENVIRONMENTAL TECHNICIAN

Professional Experience Summary

- Experience with EPA testing regulations, including 40 CFR, Part 60 and Part 75.
- CEM instrumentation projects include continuous analysis for carbon monoxide (CO), total oxides of nitrogen (NO_x), oxygen (O_2), and carbon dioxide (CO_2).
- Knowledgeable in all required regulations and methodologies for the testing and analysis of stack gas velocity and moisture content analysis.
- Knowledgeable in testing requirements and procedures for the testing and analysis of Predictive Emissions monitoring systems (PEMS) in accordance with Title 30 of the Texas Administrative Code, Chapter 117.
- Knowledgeable in OSHA, ISO 9001 regulations.

Work Experience

Golden Specialty, Inc. (September 2003-present)
Position: Environmental Technician

Texas Department of Criminal Justice (August 2002-June 2003)
Position: Correctional Officer (CO!II)

TASC Environmental Services (February 1999-October 2001)
Position: Environmental Specialist

Baker Hughes Petrolite Corporation (May 1991-February 1999)
Position: Chemical Operator

Professional Affiliations

Source Evaluation Society (SES)

Education

Source Sampling and CEMS Workshop, Walter Smith & Associates, 2003 and 2004
Correctional Officer Training Program, College of the Mainland, 2002
ISO 9000 Course, San Jacinto College, 1996
Lamar Industrial Fire School, Lamar University, 1995
Chemical Process Technician Course, Petrolite Corporation, 1992
Man-Lift Training (3/1/05)
Source Sampling and CEMS Workshop, Walter Smith & Associates, 2004
Preparation for the SES QSTI Exam Workshop, Walter Smith and Associates, 2005
Fred Pryor®:Team Building Seminar, 2007
Qualified Individual – Cylinder Gas Audits
Qualified Individual – Instrumental Methods
Qualified Individual – Portable Combustion Analyzer
Qualified Individual – USEPA Reference Methods 1-4

GOLDEN SPECIALTY

Air Quality Test Report

APPENDIX C – Calibration Data

Valero Refining-Texas, L.P.
Houston Refinery
Houston, TX

Calibration Data

SRU C Incinerator
March 21, 2012

Calibration Gas & Analyzer Configuration Data		O_2_1	SO_2_1
Trailer 10	Mfg. And Model No.:	Servomex 1440	Teledyne 100EH
	Serial Number:	01440D1/4034	269
	Range Setting:	25	300
	Calibration Span:	20.00	208.0
Zero Gas (N_2)	Cyl #:	Nitrogen	Nitrogen
	value:	0.00	0.0
Mid Calibration Gas	Cyl #:	ALM028603	CC102531
	value:	9.67	100.0
High Calibration Gas	Cyl #:	ALM008502	CC102531
	value:	20.00	208.0
Bias Gas Used		MID	MID
Calibration Error			
	Zero Reading	**-0.02**	**0.1**
	Mid Reading	**9.62**	**99.7**
	High Reading	**19.97**	**207.9**
Percent Error	Zero Reading	**0.10**	**0.05**
	Mid Reading	**0.25**	**0.14**
	High Reading	**0.15**	**0.05**
RA Run 1		**O_2_1**	**SO_2_1**
Pretest Bias	Zero Reading	**0.02**	**0.3**
	Upscale Reading	**9.67**	**101.3**
	Zero Bias	0.20	0.10
	Span Bias	0.25	0.77
Post Test Bias	Zero Reading	**0.01**	**-0.5**
	Upscale Reading	**9.66**	**102.9**
	Zero Bias	0.15	-0.29
	Span Bias	0.20	1.54
	Zero Drift	0.05	0.38
	Span Drift	0.05	0.77
Calculated Data			
	Avg. Zero Reading (C_o)=	0.015	-0.100
	Avg. Upscale Reading (C_m)=	9.665	102.100
	Actual Upscale Concentration (C_{ma})=	9.67	100.00
	Measured Concentration (C_{avg}) = RA Run 1	4.860	92.169
	Corrected Concentration (C_{gas}) = C_{gas}= (C_{avg}-C_o) x (C_{ma}/(C_m-C_o)) RA Run 1	**4.855**	**90.28**
RA Run 2		**O_2_1**	**SO_2_1**
Pretest Bias	Zero Reading	**0.01**	**-0.5**
	Upscale Reading	**9.66**	**102.9**
	Zero Bias	0.15	-0.29
	Span Bias	0.20	1.54
Post Test Bias	Zero Reading	**0.01**	**-0.3**
	Upscale Reading	**9.66**	**99.8**
	Zero Bias	0.15	-0.19
	Span Bias	0.20	0.05
	Zero Drift	0.00	0.10
	Span Drift	0.00	1.49
Calculated Data			
	Avg. Zero Reading (C_o)=	0.010	-0.400
	Avg. Upscale Reading (C_m)=	9.660	101.350
	Actual Upscale Concentration (C_{ma})=	9.67	100.00
	Measured Concentration (C_{avg}) = RA Run 2	5.132	80.306
	Corrected Concentration (C_{gas}) = C_{gas}= (C_{avg}-C_o) x (C_{ma}/(C_m-C_o)) RA Run 2	**5.133**	**79.32**

Valero Refining-Texas, L.P.
Houston Refinery
Houston, TX

Calibration Data

SRU C Incinerator
March 21, 2012

RA Run 3		O_2_1	SO_2_1
Pretest Bias	Zero Reading	0.01	-0.3
	Upscale Reading	9.66	99.8
	Zero Bias	0.15	-0.19
	Span Bias	0.20	0.05
Post Test Bias	Zero Reading	0.00	-0.5
	Upscale Reading	9.66	99.6
	Zero Bias	0.10	-0.29
	Span Bias	0.20	-0.05
	Zero Drift	0.05	0.10
	Span Drift	0.00	0.10
Calculated Data			
	Avg. Zero Reading (C_o)=	0.005	-0.400
	Avg. Upscale Reading (C_m)=	9.660	99.700
	Actual Upscale Concentration (C_{ma})=	9.67	100.00
	Measured Concentration (C_{avg}) = RA Run 3	5.141	77.581
	Corrected Concentration (C_{gas}) = C_{gas}= (C_{avg}-C_o) x (C_{ma}/(C_m-C_o)) RA Run 3	5.144	77.90
RA Run 4		O_2_1	SO_2_1
Pretest Bias	Zero Reading	0.00	-0.5
	Upscale Reading	9.66	99.6
	Zero Bias	0.10	-0.29
	Span Bias	0.20	-0.05
Post Test Bias	Zero Reading	0.01	-0.6
	Upscale Reading	9.65	99.5
	Zero Bias	0.15	-0.34
	Span Bias	0.15	-0.10
	Zero Drift	0.05	0.05
	Span Drift	0.05	0.05
Calculated Data			
	Avg. Zero Reading (C_o)=	0.005	-0.550
	Avg. Upscale Reading (C_m)=	9.655	99.550
	Actual Upscale Concentration (C_{ma})=	9.67	100.00
	Measured Concentration (C_{avg}) = RA Run 4	5.042	81.774
	Corrected Concentration (C_{gas}) = C_{gas}= (C_{avg}-C_o) x (C_{ma}/(C_m-C_o)) RA Run 4	5.047	82.24
RA Run 5		O_2_1	SO_2_1
Pretest Bias	Zero Reading	0.01	-0.6
	Upscale Reading	9.65	99.5
	Zero Bias	0.15	-0.34
	Span Bias	0.15	-0.10
Post Test Bias	Zero Reading	0.00	-0.9
	Upscale Reading	9.64	99.2
	Zero Bias	0.10	-0.48
	Span Bias	0.10	-0.24
	Zero Drift	0.05	0.14
	Span Drift	0.05	0.14
Calculated Data			
	Avg. Zero Reading (C_o)=	0.005	-0.750
	Avg. Upscale Reading (C_m)=	9.645	99.350
	Actual Upscale Concentration (C_{ma})=	9.67	100.00
	Measured Concentration (C_{avg}) = RA Run 5	4.899	89.570
	Corrected Concentration (C_{gas}) = C_{gas}= (C_{avg}-C_o) x (C_{ma}/(C_m-C_o)) RA Run 5	4.909	90.23

Valero Refining-Texas, L.P.
Houston Refinery
Houston, TX

Calibration Data

SRU C Incinerator
March 21, 2012

RA Run 6		O_2_1	SO_2_1
Pretest Bias	Zero Reading	0.00	-0.9
	Upscale Reading	9.64	99.2
	Zero Bias	0.10	-0.48
	Span Bias	0.10	-0.24
Post Test Bias	Zero Reading	0.00	-1.0
	Upscale Reading	9.64	98.8
	Zero Bias	0.10	-0.53
	Span Bias	0.10	-0.43
	Zero Drift	0.00	0.05
	Span Drift	0.00	0.19
Calculated Data			
	Avg. Zero Reading (C_o)=	0.000	-0.950
	Avg. Upscale Reading (C_m)=	9.640	99.000
	Actual Upscale Concentration (C_{ma})=	9.67	100.00
	Measured Concentration (C_{avg}) =		
	RA Run 6	5.124	99.656
	Corrected Concentration (C_{gas}) =		
	C_{gas}= (C_{avg}-C_o) x (C_{ma}/(C_m-C_o))		
	RA Run 6	5.140	100.66
RA Run 7		O_2_1	SO_2_1
Pretest Bias	Zero Reading	0.00	-1.0
	Upscale Reading	9.64	98.8
	Zero Bias	0.10	-0.53
	Span Bias	0.10	-0.43
Post Test Bias	Zero Reading	0.00	-0.5
	Upscale Reading	9.65	99.6
	Zero Bias	0.10	-0.29
	Span Bias	0.15	-0.05
	Zero Drift	0.00	0.24
	Span Drift	0.05	0.39
Calculated Data			
	Avg. Zero Reading (C_o)=	0.000	-0.750
	Avg. Upscale Reading (C_m)=	9.645	99.200
	Actual Upscale Concentration (C_{ma})=	9.67	100.00
	Measured Concentration (C_{avg}) =		
	RA Run 7	4.815	100.866
	Corrected Concentration (C_{gas}) =		
	C_{gas}= (C_{avg}-C_o) x (C_{ma}/(C_m-C_o))		
	RA Run 7	4.827	101.67
RA Run 8		O_2_1	SO_2_1
Pretest Bias	Zero Reading	0.00	-0.5
	Upscale Reading	9.65	99.6
	Zero Bias	0.10	-0.29
	Span Bias	0.15	-0.05
Post Test Bias	Zero Reading	0.00	-1.1
	Upscale Reading	9.64	98.8
	Zero Bias	0.10	-0.58
	Span Bias	0.10	-0.43
	Zero Drift	0.00	0.29
	Span Drift	0.05	0.38
Calculated Data			
	Avg. Zero Reading (C_o)=	0.000	-0.800
	Avg. Upscale Reading (C_m)=	9.645	99.200
	Actual Upscale Concentration (C_{ma})=	9.67	100.00
	Measured Concentration (C_{avg}) =		
	RA Run 8	4.908	96.054
	Corrected Concentration (C_{gas}) =		
	C_{gas}= (C_{avg}-C_o) x (C_{ma}/(C_m-C_o))		
	RA Run 8	4.921	96.85

Valero Refining-Texas, L.P.
Houston Refinery
Houston, TX

Calibration Data

SRU C Incinerator
March 21, 2012

RA Run 9		O_2_1	SO_2_1
Pretest Bias	Zero Reading	0.00	-1.1
	Upscale Reading	9.64	98.8
	Zero Bias	0.10	-0.58
	Span Bias	0.10	-0.43
Post Test Bias	Zero Reading	0.00	-1.1
	Upscale Reading	9.64	98.8
	Zero Bias	0.10	-0.58
	Span Bias	0.10	-0.43
	Zero Drift	0.00	0.00
	Span Drift	0.00	0.00
Calculated Data			
	Avg. Zero Reading (C_o)=	0.000	-1.100
	Avg. Upscale Reading (C_m)=	9.640	98.800
	Actual Upscale Concentration (C_{ma})=	9.67	100.00
	Measured Concentration (C_{avg}) =		
	RA Run 9	4.974	112.891
	Corrected Concentration (C_{gas}) =		
	C_{gas}= (C_{avg}-C_o) x (C_{ma}/(C_m-C_o))		
	RA Run 9	4.990	114.10
RA Run 10		O_2_1	SO_2_1
Pretest Bias	Zero Reading	0.00	-1.1
	Upscale Reading	9.64	98.8
	Zero Bias	0.10	-0.58
	Span Bias	0.10	-0.43
Post Test Bias	Zero Reading	0.00	-1.1
	Upscale Reading	9.64	98.7
	Zero Bias	0.10	-0.58
	Span Bias	0.10	-0.48
	Zero Drift	0.00	0.00
	Span Drift	0.00	0.05
Calculated Data			
	Avg. Zero Reading (C_o)=	0.000	-1.100
	Avg. Upscale Reading (C_m)=	9.640	98.750
	Actual Upscale Concentration (C_{ma})=	9.67	100.00
	Measured Concentration (C_{avg}) =		
	RA Run 10	5.043	100.486
	Corrected Concentration (C_{gas}) =		
	C_{gas}= (C_{avg}-C_o) x (C_{ma}/(C_m-C_o))		
	RA Run 10	5.059	101.74
RA Run 11		O_2_1	SO_2_1
Pretest Bias	Zero Reading	0.00	-1.1
	Upscale Reading	9.64	98.7
	Zero Bias	0.10	-0.58
	Span Bias	0.10	-0.48
Post Test Bias	Zero Reading	0.00	-1.3
	Upscale Reading	9.64	98.7
	Zero Bias	0.10	-0.67
	Span Bias	0.10	-0.48
	Zero Drift	0.00	0.10
	Span Drift	0.00	0.00
Calculated Data			
	Avg. Zero Reading (C_o)=	0.000	-1.200
	Avg. Upscale Reading (C_m)=	9.640	98.700
	Actual Upscale Concentration (C_{ma})=	9.67	100.00
	Measured Concentration (C_{avg}) =		
	RA Run 11	5.061	84.696
	Corrected Concentration (C_{gas}) =		
	C_{gas}= (C_{avg}-C_o) x (C_{ma}/(C_m-C_o))		
	RA Run 11	5.077	85.98

Valero Refining-Texas, L.P.
Houston Refinery
Houston, TX

Calibration Data

SRU C Incinerator
March 21, 2012

RA Run 12		O_2_1	SO_2_1
Pretest Bias	Zero Reading	0.00	-1.3
	Upscale Reading	9.64	98.7
	Zero Bias	0.10	-0.67
	Span Bias	0.10	-0.48
Post Test Bias	Zero Reading	-0.01	-1.3
	Upscale Reading	9.64	98.6
	Zero Bias	0.05	-0.67
	Span Bias	0.10	-0.53
	Zero Drift	0.05	0.00
	Span Drift	0.00	0.05
Calculated Data			
	Avg. Zero Reading (C_o)=	-0.005	-1.300
	Avg. Upscale Reading (C_m)=	9.640	98.650
	Actual Upscale Concentration (C_{ma})=	9.67	100.00
	Measured Concentration (C_{avg}) =		
	RA Run 12	5.011	94.239
	Corrected Concentration (C_{gas}) =		
	C_{gas}= (C_{avg}-C_o) x (C_{ma}/(C_m-C_o))		
	RA Run 12	5.029	95.59

AIR LIQUIDE | Air Liquide America Specialty Gases LLC | Scott

RATA CLASS

Dual-Analyzed Calibration Standard

11426 FAIRMONT PKWY, LA PORTE, TX 77571 Phone: 800-248-1427 Fax: 281-474-8419

CERTIFICATE™ OF ACCURACY: Interference Free Multi-Component EPA Protocol Gas

Assay Laboratory - PGVP Vendor ID: A32011

AIR LIQUIDE AMERICA SPECIALTY GASES LLC
11426 FAIRMONT PKWY
LA PORTE, TX 77571

P.O. No.: SBS081602
Document # : 44564513-002

Customer
GOLDEN SPECIALTY CONSULTING, LTD

GORDON GOSSETT
931 SEACO COURT
DEER PARK TX 77536
US

ANALYTICAL INFORMATION Gas Type : OCC

This certification was performed according to EPA Traceability Protocol For Assay & Certification of Gaseous Calibration Standards; Procedure G-1; September, 1997.

Cylinder Number: ALM008502 **Certification Date:** 05Dec2011 **Exp. Date:** 05Dec2014
Cylinder Pressure*:** 1850 PSIG **Batch No:** LAP0055760

COMPONENT	CERTIFIED CONCENTRATION (Moles)		ACCURACY**	TRACEABILITY
CARBON DIOXIDE	19.1	%	+/- 1%	Direct NIST and VSL
CARBON MONOXIDE	394	PPM	+/- 1%	Direct NIST and VSL
OXYGEN	20.0	%	+/- 1%	Direct NIST and VSL
NITROGEN		BALANCE		

*** Do not use when cylinder pressure is below 150 psig.
** Analytical accuracy is based on the requirements of EPA Protocol Procedure G1, September 1997.

REFERENCE STANDARD

TYPE/SRM NO.	EXPIRATION DATE	CYLINDER NUMBER	CONCENTRATION		COMPONENT
NTRM 2300	02Jan2012	K024700	23.01	%	CARBON DIOXIDE
NTRM 1680	16Jul2017	KAL003939	499.8	PPM	CARBON MONOXIDE
NTRM 2659	02Oct2012	10003416	20.85	%	OXYGEN

INSTRUMENTATION

INSTRUMENT/MODEL/SERIAL#	DATE LAST CALIBRATED	ANALYTICAL PRINCIPLE
FTIR//MG-09-149	02Dec2011	FTIR
SIEMENS CO/ULTRAMAT 6E-HIGH/WO356	17Nov2011	NDIR
SERVOMEX/MODEL 244A/701/716	01Dec2011	PARAMAGNETIC

ANALYZER READINGS

(Z=Zero Gas R=Reference Gas T=Test Gas r=Correlation Coefficient)

First Triad Analysis

CARBON DIOXIDE
Date: 05Dec2011 Response Unit: %
Z1=0.00058 R1=23.07620 T1=19.15157
R2=23.11365 Z2=0.00506 T2=19.16894
Z3=0.00829 T3=19.19829 R3=23.11998
Avg. Concentration: 19.09 %

CARBON MONOXIDE
Date: 30Nov2011 Response Unit: PPM
Z1=0.00000 R1=501.5000 T1=395.3000
R2=501.4000 Z2=0.00000 T2=395.3000
Z3=0.00000 T3=395.3000 R3=501.4000
Avg. Concentration: 393.9 PPM

OXYGEN
Date: 08Dec2011 Response Unit: VOLTS
Z1=0.00000 R1=0.84000 T1=0.80500
R2=0.84000 Z2=0.00000 T2=0.80500
Z3=0.00000 T3=0.80500 R3=0.84000
Avg. Concentration: 19.98 %

Second Triad Analysis

CARBON MONOXIDE
Date: 08Dec2011 Response Unit: PPM
Z1=0.00000 R1=501.2000 T1=394.8000
R2=501.2000 Z2=0.00000 T2=394.8000
Z3=0.00000 T3=394.8000 R3=501.2000
Avg. Concentration: 393.6 PPM

Calibration Curve

CARBON DIOXIDE
Concentration=A+Bx+Cx2+Dx3+Ex4
r=9.99997E-1
Constants: A=0.00000E+0
B=9.05981E-1 C=1.21380E-2
D=0.00000E+0 E=0.00000E+0

CARBON MONOXIDE
Concentration=A+Bx+Cx2+Dx3+Ex4
r=0.9999978
Constants: A=-0.36639329
B=0.999593023 C=
D= E=

OXYGEN
Concentration=A+Bx+Cx2+Dx3+Ex4
r=0.9999996
Constants: A=-0.00147786
B=24.85715968 C=
D= E=

Special Notes: CGA 590 ; DEW PT. 40 DEG F.

APPROVED BY: DAVID KELLY

AIR LIQUIDE | Air Liquide America Specialty Gases LLC | Scott

RATA CLASS

Dual-Analyzed Calibration Standard

11426 FAIRMONT PKWY, LA PORTE, TX 77571 Phone: 800-248-1427 Fax: 281-474-8419

CERTIFICATE™ OF ACCURACY: Interference Free Multi-Component EPA Protocol Gas

Assay Laboratory - PGVP Vendor ID: A32012

AIR LIQUIDE AMERICA SPECIALTY GASES LLC
11426 FAIRMONT PKWY
LA PORTE, TX 77571

P.O. No.: SBS081602
Document # : 45449781-002

Customer
GOLDEN SPECIALTY CONSULTING, LTD

GORDON GOSSETT
931 SEACO COURT
DEER PARK TX 77536
US

ANALYTICAL INFORMATION Gas Type : OCC

This certification was performed according to EPA Traceability Protocol For Assay & Certification of Gaseous Calibration Standards; Procedure G-1; September, 1997.

Cylinder Number: ALM028603 **Certification Date:** 04May2011 **Exp. Date:** 04May2014
Cylinder Pressure*:** 2000 PSIG **Batch No:** LAP0060745

COMPONENT	CERTIFIED CONCENTRATION (Moles)		ACCURACY**	TRACEABILITY
CARBON DIOXIDE	9.59	%	+/- 1%	Direct NIST and VSL
CARBON MONOXIDE	197	PPM	+/- 1%	
OXYGEN	9.67	%	+/- 1%	
NITROGEN		BALANCE		

*** Do not use when cylinder pressure is below 150 psig.
** Analytical accuracy is based on the requirements of EPA Protocol Procedure G1, September 1997.

REFERENCE STANDARD

TYPE/SRM NO.	EXPIRATION DATE	CYLINDER NUMBER	CONCENTRATION		COMPONENT
NTRM 1674	03Feb2016	K009567	7.016	%	CARBON DIOXIDE
NTRM 1679	25Aug2016	KAL003155	101.0	PPM	CARBON MONOXIDE
NTRM 2350	01May2013	K026427	23.50	%	OXYGEN

INSTRUMENTATION

INSTRUMENT/MODEL/SERIAL#	DATE LAST CALIBRATED	ANALYTICAL PRINCIPLE
FTIR//MG-09-149	21Apr2011	FTIR
SIEMENS CO/ULTRAMAT 6E-HIGH/WO355	09May2011	NDIR
SERVOMEX/MODEL 244A/701/716	25Apr2011	PARAMAGNETIC

ANALYZER READINGS

(Z = Zero Gas R = Reference Gas T = Test Gas r = Correlation Coefficient)

First Triad Analysis | **Second Triad Analysis** | **Calibration Curve**

CARBON DIOXIDE

Date: 05May2011 Response Unit: %
Z1 = 0.00160 R1 = 6.87982 T1 = 9.40809
R2 = 6.89455 Z2 = 0.00295 T2 = 9.41586
Z3 = 0.00309 T3 = 9.43187 R3 = 6.90539
Avg. Concentration: 9.587 %

Concentration = A + Bx + Cx2 + Dx3 + Ex4
r = 9.99990E-1
Constants: A = 0.00000E+0
B = 7.32425E-1 C = 7.66800E-3
D = 0.00000E+0 E = 0.00000E+0

CARBON MONOXIDE

Date: 02May2011 Response Unit: PPM
Z1 = 0.00000 R1 = 101.0000 T1 = 195.8500
R2 = 101.0000 Z2 = 0.00000 T2 = 195.8500
Z3 = 0.00000 T3 = 195.8500 R3 = 101.0000
Avg. Concentration: 197.4 PPM

Date: 09May2011 Response Unit: PPM
Z1 = 0.00000 R1 = 101.5000 T1 = 195.9500
R2 = 101.5000 Z2 = 0.00000 T2 = 195.9500
Z3 = 0.00000 T3 = 195.9500 R3 = 101.5000
Avg. Concentration: 196.5 PPM

Concentration = A + Bx + Cx2 + Dx3 + Ex4
r = 0.999999
Constants: A = -0.02756826
B = 0.99758686 C =
D = E =

OXYGEN

Date: 09May2011 Response Unit: VOLTS
Z1 = 0.00000 R1 = 0.94000 T1 = 0.38700
R2 = 0.94000 Z2 = 0.00000 T2 = 0.38700
Z3 = 0.00000 T3 = 0.38700 R3 = 0.94000
Avg. Concentration: 9.667 %

Concentration = A + Bx + Cx2 + Dx3 + Ex4
r = 0.9999987
Constants: A = 0.000249421
B = 24.9768807 C =
D = E =

Special Notes: CGA 590 ; DEW PT. 40 DEG. F.

APPROVED BY: DAVID KELLY

AIR LIQUIDE Air Liquide America Specialty Gases LLC Scott

RATA CLASS

Dual-Analyzed Calibration Standard

11426 FAIRMONT PKWY, LA PORTE, TX 77571 Phone: 800-248-1427 Fax: 281-474-8419

CERTIFICATE OF ACCURACY: EPA Protocol Gas

Assay Laboratory

AIR LIQUIDE AMERICA SPECIALTY GASES LLC
11426 FAIRMONT PKWY
LA PORTE, TX 77571

P.O. No.: SBS081602
Document # : 39077617-001

Customer

GOLDEN SPECIALTY CONSULTING, LTD

931 SEACO COURT
DEER PARK TX 77536
US

ANALYTICAL INFORMATION

This certification was performed according to EPA Traceability Protocol For Assay & Certification of Gaseous Calibration Standards; Procedure G-1; September, 1997.

Cylinder Number: CC102531
Cylinder Pressure*:** 1900 PSIG
Certification Date: 18Oct2010
Exp. Date: 17Oct2012
Batch No: LAP0026347

COMPONENT	CERTIFIED CONCENTRATION (Moles)		ACCURACY**	TRACEABILITY
SULFUR DIOXIDE *	208	PPM	+/- 1%	Direct NIST and VSL
NITROGEN		BALANCE		

*** Do not use when cylinder pressure is below 150 psig.
** Analytical accuracy is based on the requirements of EPA Protocol Procedure G1, September 1997.

REFERENCE STANDARD

TYPE/SRM NO.	EXPIRATION DATE	CYLINDER NUMBER	CONCENTRATION	COMPONENT
NTRM 0260	15Jan2012	KAL003774	255.5 PPM	SULFUR DIOXIDE

INSTRUMENTATION

INSTRUMENT/MODEL/SERIAL#	DATE LAST CALIBRATED	ANALYTICAL PRINCIPLE
FTIR//000929060	18Oct2010	FTIR

ANALYZER READINGS

(Z = Zero Gas R = Reference Gas T = Test Gas r = Correlation Coefficient)

First Triad Analysis

SULFUR DIOXIDE *

Date: 11Oct2010 Response Unit: PPM

Z1 = 0.05362	R1 = 256.0440	T1 = 208.7109
R2 = 256.1932	Z2 = 0.06733	T2 = 208.7523
Z3 = 0.17496	T3 = 209.0065	R3 = 256.4596

Avg. Concentration: 208.2 PPM

Second Triad Analysis

Date: 18Oct2010 Response Unit: PPM

Z1 = -0.02753	R1 = 255.6295	T1 = 208.5685
R2 = 256.8260	Z2 = 0.05250	T2 = 208.6261
Z3 = 0.08012	T3 = 208.7878	R3 = 255.8379

Avg. Concentration: 208.4 PPM

Calibration Curve

Concentration = A + Bx + Cx2 + Dx3 + Ex4
r = 9.99997E-1

Constants:	A = 0.000000E+0
B = 1.003328E+0	C = 0.000000E+0
D = 0.000000E+0	E = 0.000000E+0

APPROVED BY: _____
Ron Stitt

Method 205 Validation

Gas Mixing System	Maker/Model	Environics 4040	Serial No:	3100	Range:	0-100%
O_2 Analyzer	Maker/Model	Servomex 1440	Serial No:	01440D1/4034	Range:	0-25%
High O_2 (%)	20.0	Cylinder No:	ALM008502	Expiration Date:		12/6/2014
Mid O_2 (%)	9.67	Cylinder No:	ALM028003	Expiration Date:		5/4/2014
Date:	3/21/2012	Time:	NA			
Personnel:	Dan Loubiere					

Validation Data

Target Concentration	Allow Range (%)		Run	Concentration (%)	Average (%)	Allow Range (%)		Within 2% Average (?)	Meet Requirement (?)
14.0	13.72	14.28	1	14.07	14.05	13.77	14.33	YES	YES
			2	14.03				YES	
			3	14.04				YES	
8.0	7.84	8.16	1	8.01	8.01	7.85	8.17	YES	YES
			2	8.01				YES	
			3	8.00				YES	

Mid-Gas Check

Target Concentration	Allow Range (%)		Run	Concentration (%)	Average (%)	Allow Range (%)		Within 2% Average (?)	Meet Requirement (?)
9.67	9.48	9.86	1	9.68	9.68	9.49	9.87	YES	YES
			2	9.68				YES	
			3	9.68				YES	

GOLDEN SPECIALTY

Hand Check Calculations

FACILITY: Valero Houston	DATE: 3/21/12	
SOURCE NAME: SRUC Incinerator	CITY, STATE: Houston TX	RUN NO: 6

	O_2 (Dry) *	CO_2	SO_2	NO_x	CO	THC
Upscale gas - C_{ma}	20.05	/	100.0	/	/	/
Span (ppm,%) *	9.67	/	208.0	/	/	/

Difference = Final Reading - Initial Reading %Zero = (Zero difference / Span)*100 %Span = (Span difference / Span)*100

Run No. and Pollutant	ZERO			UPSCALE		
	Initial Reading	Final Reading	Average (C_o) (ppm, %) *	Initial Reading	Final Reading	Average (C_m) (ppm, %) *
6 O_2	0.00	0.00	0.00	9.64	9.64	9.64
CO_2	—	—	—	—	—	—
6 SO_2	-0.9	-1.0	-0.95	99.2	98.8	99.0
NO_x	—	—	—	—	—	—
CO	—	—	—	—	—	—
THC	—	—	—	—	—	—

O_2 for Correction %	F Factor dscf/mmBtu	GCV	Fuel Flow Rate	Conversion Factor	Q_{sd} dscf/hr	Q_s scf/hr
0	—	—	—	—	—	—

C_o = (Initial Zero Reading + Final Zero Reading)/2
C_m = (Initial Span Reading + Final Span Reading)/2
$C_{gas} = (C_{avg.} - C_o) * (C_{ma} / (C_m - C_o))$
C_{gas} Corrrected = $C_{gas} * ((20.9 - Corr.\ O_2) / (20.9 - \%\ O_2))$

$C_d = (C_{gas} * M.W.) / (385.4 * 1{,}000{,}000)$
lb/MMBtu = C_d * F Factor * (20.9 / (20.9 - $\%O_2$))
lb/hr = lb/MMBtu * GCV * Fuel Flow Rate * Conversion Factor
lb/hr = lb/dscf x Q_{sd} (dscf/hr)

Run No. and Pollutant	$C_{avg.}$ Uncorrected Stack Gas Concentration (ppm, %) *	C_o Average of Zero Gas	C_m Average of Upscale Gas	C_{gas} Corrected Stack Gas Concentration (ppm, %) *	M.W. Molecular Weight	C_{gas} Corrected Concentration in ppm @ 0 % O_2	C_d Concentration in lb/dscf	lb/MMBtu Emission Rate lb/MMBtu	lb/hr Emission Rate lb/hr
O_2	5.124	0.00	9.64	5.140	NA	NA	NA	NA	NA
CO_2	—	—	—	—	NA	NA	NA	NA	NA
SO_2	99.656	-0.95	99.0	100.656	64	133.485	—	—	—
NO_x	—	—	—	—	46	—	—	—	—
CO	—	—	—	—	28	—	—	—	—
THC	—	—	—	—	44.097 (as C_3H_8)	—	—	—	—

Note * O_2 and CO_2 are expressed in percent.

Calc. QA Performed by _____ 3/29/12

GOLDEN SPECIALTY

Relative Accuracy Hand Check Calculations

FACILITY: Valero Houston	DATE: 3/21/12
SOURCE NAME: SRU C Incinerator	CITY, STATE: Houston, TX
COMPOUND: SO_2	UNITS: ppmvd @ 0% O_2

Relative Accuracy Test No.	Date	Start Time	Reference Sample (RM)	Analyzer Reading	Difference DIFF	No. of Sets	$t_{0.975}$ Values for No. of Sets	Difference Squared Diff²
1	3/21/12	10:15	117.60	100.58	17.02	1	NA	289.6804
2	↓	↓	105.14	99.13	6.01	2	12.706	36.1201
3			103.33	99.13	4.20	3	4.303	17.6400
4			108.42	108.67	-0.25	4	3.182	0.0625
5			117.93	126.71	-8.78	5	2.776	77.0884
6			133.48	115.96	17.52	6	2.571	306.9504
7			132.20	127.21	4.99	7	2.447	24.9001
8	↓	↓	126.68	139.33	-12.65	8	2.365	160.0225
11		17:09	113.57	104.34	9.23	9	2.306	85.1929
						10	2.262	
						11	2.228	
						12	2.201	
		Avg. RM =	117.594	SUM DIFF =	37.29		Sum Diff² =	997.6573

cc = confidence coefficient.
S_d = Standard Deviation.
AS = applicable standard.
Avg. RM = average reference method value.
|d| = absolute value of mean of the differences.
|cc| = absolute value of the confidence coefficient.
Diff = RM - Analyzer Reading

|d| = | SUM DIFF | / No. of Sets |d| = 4.143 ✓

$S_d = ([(\text{Sum Diff}^2) - ((\text{SUM DIFF})^2 / n)] / n-1)^{1/2}$ S_d = 10.266 ✓

$cc = t_{0.975} * [Sd / (n^{1/2})]$ cc = 7.891 ✓

Relative Accuracy versus Mean Reference Method Sample

RA = [(|d| + |cc|) / Avg. RM] * 100 =

RA = 10.23 % ✓

Allowable Limits:
Limit: 10% - CO Limit: 20% - O_2 & CO_2
Limit: 20% - NO_x Limit: 20% - SO_2
Allowable Limits Acid Rain :
Limit: 10% - NO_x/O_2 System in lb/MMBtu

Relative Accuracy versus Applicable Standard = 250.0

RA = [(|d| + |cc|) / applicable standard] * 100

RA = 4.81 % ✓

Allowable Limits:
Limit: 5% - CO Limit: 1% - O_2 & CO_2
Limit: 10% - NO_x Limit: 10% - SO_2
Allowable Limits Acid Rain :
Limit: 0.02 lb/MMBtu for sources with emissions of < 0.20 lb/MMBtu
PS 4A: |d| + |cc| Limit: 5 ppm
NO_x : TCEQ Rule 117: |d| + |cc| Limit: 2 ppm

Calc. QA Performed by _____ 3/29/12

GOLDEN SPECIALTY

Relative Accuracy Hand Check Calculations

FACILITY: Valero Houston	DATE: 3/21/12
SOURCE NAME: SRU C Incinerator	CITY, STATE: Houston, TX
COMPOUND: O_2	UNITS: %

Relative Accuracy Test No.	Date	Start Time	Reference Sample (RM)	Analyzer Reading	Difference DIFF	No. of Sets	$t_{0.975}$ Values for No. of Sets	Difference Squared Diff²
1	3/21/12	10:15	4.855	5.380	-0.525	1	NA	0.275625
2			5.133	5.393	-0.260	2	12.706	0.067600
3			5.144	5.132	+0.012	3	4.303	0.000144
4			5.047	5.195	-0.145	4	3.182	0.021025
5			4.909	5.042	-0.133	5	2.776	0.017689
6			5.140	5.131	0.009	6	2.571	0.000081
7			4.827	5.260	-0.433	7	2.447	0.187489
8			4.921	5.059	-0.138	8	2.365	0.019044
11		17:04	5.077	5.284	-0.207	9	2.306	0.042849
						10	2.262	
						11	2.229	
						12	2.201	
		Avg. RM = 5.006		SUM DIFF = -1.82		Sum Diff² = 0.631546		

cc = confidence coefficient.
S_d = Standard Deviation.
AS = applicable standard.

Avg. RM = average reference method value.
|d| = absolute value of mean of the differences.
|cc| = absolute value of the confidence coefficient.

Diff = RM - Analyzer Reading

$|d| = |\text{SUM DIFF}| / \text{No. of Sets}$ $\quad |d| = 0.202$ ✓

$S_d = ([[\text{Sum Diff}^2] - ([\text{SUM DIFF}]^2 / n)] / n-1)^{1/2}$ $\quad S_d = 0.181$ ✓

$cc = t_{0.975} * [Sd / (n^{1/2})]$ $\quad cc = 0.140$ ✓

Relative Accuracy versus Mean Reference Method Sample

RA = [(|d| + |cc|) / Avg. RM] * 100 =

RA = |d| = 0.202 ✓

Allowable Limits:
Limit: 10% - CO Limit: 20% - O_2 & CO_2
Limit: 20% - NO_x Limit: 20% - SO_2
Allowable Limits Acid Rain :
Limit: 10% - NO_x/O_2 System in lb/MMBtu

Relative Accuracy versus Applicable Standard

RA = [(|d| + |cc|) / applicable standard] * 100

RA = N/A

Allowable Limits:
Limit: 5% - CO Limit: 1% - O_2 & CO_2
Limit: 10% - NO_x Limit: 10% - SO_2
Allowable Limits Acid Rain :
Limit: 0.02 lb/MMBtu for sources with emissions of < 0.20 lb/MMBtu
PS 4A: |d| + |cc| Limit: 5 ppm
NO_x : TCEQ Rule 117: |d| + |cc| Limit: 2 ppm

Calc. QA Performed by [signature] 3/29/12

GOLDEN SPECIALTY

Air Quality Test Report

APPENDIX D – Field Data

9/30/94: FD1-1

FIELD DATA SHEET 1
Sampling and Velocity Traverse Points

Client/Plant Name Valero Job # 12VAH171

City/State Houston, TX Date/Time 3/21/12

Test Location SRU C RATA Personnel DZ, BT

Port I.D.			3"
Distance from Far Wall to Outside of Port			71 3/4"
Nipple Length and/or Wall Thickness			6"
Stack/Duct (✓) Blue Print ( ) Measured (✓)			
Depth/Diameter (>12 in. ?)			65 3/4"
Width (if rectangular)			
Equiv. Diameter (if rect.) $D_e = 2\,D\,W/(D + W)$			
Area (A) (>113 in.^{2} ?) $A = \pi D_2/4$ or $D\,W$			
	Distance	D_e	No. Pts*
Upstream (≥2 D_e?)	11'		
Downstream (≥0.5 D_e?)	67'		
Rectangular Matrix			

* *Circle larger of two.*

Pt.	% Duct Depth	Dist. from Inside Wall*	Dist. from Outside of Port
1	0.167	11"	17"
2	0.500	32 7/8"	38 7/8"
3	0.833	54 3/4	60 3/4
4			
5			
6			
7			
8			
9			
10			
11			
12			
13			
14			
15			
16			
17			
18			
19			
20			

* Do not place closer to stack walls than:
1.0 in. for stack dia. >24 in.
0.5 in. for stack dia. 12 to ≤24 in.

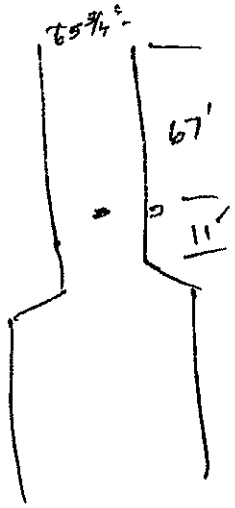

Sketch of Location: In the space above, sketch a flow diagram of the test location; show the distance from the ports to flow disturbances before and after. Sketch the cross-sectional area; show sampling port locations. In horizontal ducts, check for dust buildups and measure or estimate the depth.

QA/QC Check
Completeness ✓ Legibility ✓ Accuracy ✓ Specifications ✓ Reasonableness ✓

Checked by: [signature] Personnel (Signature/Date) [signature] Team Leader (Signature/Date)

GOLDEN SPECIALTY

Operating Discipline Checklist

Project ID: Jameno Hou	Test Date: 3/21/12
Plant: Source: SRU C RATA	Team Members: DL, BJ
Description: 12VAL171	Trailer Unit: T-10

	Item to Check	(Initials Required)
1	Checklist for GOLDEN Trailer Set-Up (Form #GSC-WP001-001)	[illegible]
2	EPA Protocol 1 Gases Used	[illegible]
3	Fully Redundant Sampling System System 1 ✓ System 2 [illegible]	[illegible]
4	Stratification Test Conducted an Documented Start time: Finish Time: File Name:	
5	Documentation of Probe Geometry and Location (Form #GSC-WP007-003)	[illegible]
6	Measurement of Ambient Conditions: Barometer: 30.02 Rel.Humidity: 75% Temperature: 70°F	[illegible]
7	Flanged Sample Probe or Port Closures	[illegible]
8	Heated Sample Lines Set Temperature: 270°F Measured Temperature: 262°F	[illegible]
9	Grounding and electrical requirements	[illegible]
10	Data Exclusion Log (Form # GSC-WP007-002)	[illegible]
11	Staggered Calibrations	[illegible]
12	Data Storage and Formatting: Headers on and checked? ✓ Yes ___ No Data Logging ON? ✓ Yes ___ No	[illegible]
13	Gas Conditioning System Temperature System 1: 4.1°C System 2: —	[illegible]
14	Reasons for any exceptions:	

Signature of Person Recording Information:	[illegible]	Date:	3/21/12
Approval of Client to Proceed with Testing:		Date:	

Form # GSC-WP007-004
REV 2010-01, EFF 11/1/10

GOLDEN SPECIALTY

FORM GSC-WP007-002
REV 2010-01, EFF 11/1/10

Data Exclusion Log

Project ID: 12VAN171	Test Dates From: 3/21/12	To:
Plant: Vinesco Hoy	Trailer#: T-10	Analysts: DL
Source: SMC RATA	Data for Filename:	
Description:		

Date	System #	Start Time	End Time	Reason
3/21/12	1	939		Cal [illegible]
		1000		Start system [illegible]
		1015		start [illegible]

REFERENCE METHOD
Analyzer Calibration Error

GOLDEN SPECIALTY

Project ID: Ventura Hwy Plant: Source: SLC C DATA Description: 12VA1171	Test Date: 3/21/12	Analyst: DL
	Trailer Unit: 10	Analyzer System: 1
	Assigned Data:	

Component	Cylinder Number	Range	Analyzer Response System 1	Analyzer Response System 2	Actual Conc.	Cylinder Exp. Date
Oxides of Nitrogen	ALM038563	*High*			94.7 ppm	3/13
	CC53017	*Mid*			50.8 ppm	11/12
	N2	*Zero*			0 ppm	-
Nitrogen Dioxide	ALM015177	*n/a*			48.3 ppm	10/12
Carbon Monoxide	ALM008502	*High*			394 ppm	12/14
	ALM028603	*Mid*			197 ppm	5/14
	N2	*Zero*			0 ppm	-
Oxygen	ALM008502	*High*	19.97		20.0 %	12/14
	ALM028603	*Mid*	9.62		9.67%	5/14
	N2	*Zero*	-0.02		0 %	-
Total Hydrocarbons		*High*				
		Mid				
		Low				
		Zero				
Sulfur Dioxide	Diluted	*High*	207.9		208 ppm	11/12
	CC102531 (208)	*Mid*	99.7		100 ppm	11/12
	N2	*Zero*	0.1		0 ppm	-
Carbon Dioxide	ALM008502	*High*			19.1 %	12/14
	ALM028603	*Mid*			9.59 %	5/14
	N2	*Zero*			0 %	-

ANALYZER INFORMATION

Analyzer Type	SYSTEM #1 Model	SYSTEM #1 Serial #	SYSTEM #1 Range	SYSTEM #2 Model	SYSTEM #2 Serial #	SYSTEM #2 Range
NO_x	CAI 400	U02021	0 – 100 ppm	CAI 400	W08046-M	0 – 100 ppm
CO	Thermo 48i	0708021118	0 – 500 ppm	CAI 602P	W12010-MZ	0 – 500 ppm
O2	Servomex 1440	4034	0 – 25 %	CAI 602P	W12010-MZ	0 – 25 %
CO_2	Servomex 1440	4034	0 -20 %	CAI 602P	W12010-MZ	0 -20 %
SO_2	Teledyne 100EH	269	0 – 300 ppm			
VOC	VIG 200	4091009	0 – 100 ppm			

GOLDEN SPECIALTY

REFERENCE METHOD
Analyzer System Bias

Project ID: / Plant: Valero Ithm		Test Date(s): 8/21/12	Analyst: DL
Source: / Description: SNU C Data		Trailer Unit: 7-10	Analyzer System: 1
ID V2A171		Assigned Data:	

RUN NO: 1	Calibration Gas / Conc.	Pre-Test Calibration ZERO	Pre-Test Calibration SPAN	Post Test Calibration ZERO	Post Test Calibration SPAN	Bias <5% (Check)	**Response time (Zero & Span)
Date: 8/21/12	NO_x						sec
	CO						sec
Start Time: 1015	O_2	0.02	9.67	0.01	9.66		36/36 sec
	CO_2						sec
End Time: 1036	THC						sec
	SO_2	0.3	101.3	-0.5	102.9		58/58 sec

RUN NO: 2	Calibration Gas / Conc.	Pre-Test Calibration ZERO	Pre-Test Calibration SPAN	Post Test Calibration ZERO	Post Test Calibration SPAN	Bias <5% (Check)	Drift <3% Of Span
Date:	NO_x						
	CO						
Start Time: 1102	O_2			0.01	9.66		
	CO_2						
End Time: 1123	THC						
	SO_2			-0.3	99.8		

RUN NO: 3	Calibration Gas / Conc.	Pre-Test Calibration ZERO	Pre-Test Calibration SPAN	Post Test Calibration ZERO	Post Test Calibration SPAN	Bias <5% (Check)	Drift <3% Of Span
Date:	NO_x						
	CO						
Start Time: 1142	O_2			0.00	9.66		
	CO_2						
End Time: 1203	THC						
	SO_2			-0.5	99.6		

RUN NO: 4	Calibration Gas / Conc.	Pre-Test Calibration ZERO	Pre-Test Calibration SPAN	Post Test Calibration ZERO	Post Test Calibration SPAN	Bias <5% (Check)	Drift <3% Of Span
Date:	NO_x						
	CO						
Start Time: 1225	O_2			0.01	9.65		
	CO_2						
End Time: 1246	THC						
	SO_2			-0.6	99.5		

RUN NO: 5	Calibration Gas / Conc.	Pre-Test Calibration ZERO	Pre-Test Calibration SPAN	Post Test Calibration ZERO	Post Test Calibration SPAN	Bias <5% (Check)	Drift <3% Of Span
Date:	NO_x						
	CO						
Start Time: 1306	O_2			0.00	9.64		
	CO_2						
End Time: 1327	THC						
	SO_2			-0.9	99.2		

Comments:

**Record response times for run 1 only for each component tested

GOLDEN SPECIALTY

REFERENCE METHOD
Analyzer System Bias

Project ID: Plant: VALERO HOU		Test Date(s): 3/21/12	Analyst: DL
Source: Description: SMM C RATA		Trailer Unit: T-10	Analyzer System: 1
12VAN71		Assigned Data:	

RUN NO: 6	Calibration Gas / Conc.	Pre-Test Calibration ZERO	Pre-Test Calibration SPAN	Post Test Calibration ZERO	Post Test Calibration SPAN	Bias <5% (Check)	**Response time (Zero & Span)
Date:	NO_x						sec
	CO						sec
Start Time: 1347	O_2			0.00	9.64		sec
	CO_2						sec
End Time: 1408	THC						sec
	SO_2			-1.0	98.8		sec

RUN NO: 7	Calibration Gas / Conc.	Pre-Test Calibration ZERO	Pre-Test Calibration SPAN	Post Test Calibration ZERO	Post Test Calibration SPAN	Bias <5% (Check)	Drift <3% Of Span
Date:	NO_x						
	CO						
Start Time: 1429	O_2			0.00	9.65		
	CO_2						
End Time: 1449	THC						
	SO_2			-0.5	99.2		

RUN NO: 8	Calibration Gas / Conc.	Pre-Test Calibration ZERO	Pre-Test Calibration SPAN	Post Test Calibration ZERO	Post Test Calibration SPAN	Bias <5% (Check)	Drift <3% Of Span
Date:	NO_x						
	CO						
Start Time: 1508	O_2			0.00	9.64		
	CO_2						
End Time: 1525	THC						
	SO_2			-1.1	98.8		

RUN NO: 9	Calibration Gas / Conc.	Pre-Test Calibration ZERO	Pre-Test Calibration SPAN	Post Test Calibration ZERO	Post Test Calibration SPAN	Bias <5% (Check)	Drift <3% Of Span
Date:	NO_x						
	CO						
Start Time: 1541	O_2			0.00	9.64		
	CO_2						
End Time: 1609	THC						
	SO_2			-1.1	98.8		

RUN NO: 10	Calibration Gas / Conc.	Pre-Test Calibration ZERO	Pre-Test Calibration SPAN	Post Test Calibration ZERO	Post Test Calibration SPAN	Bias <5% (Check)	Drift <3% Of Span
Date:	NO_x						
	CO				9.64 9.57		
Start Time: 1629	O_2			0.00			
	CO_2						
End Time: 1650	THC						
	SO_2			-1.1	98.7		

Comments:

**Record response times for run 1 only for each component tested

GOLDEN SPECIALTY

REFERENCE METHOD
Analyzer System Bias

Project ID: Plant: Bayou Hoy		Test Date(s): 3/21/12	Analyst: DL
Source: Description: SM1 C DATA		Trailer Unit: T-10	Analyzer System: 1
12 VA2417 1		Assigned Data:	

RUN NO: 11	Calibration Gas / Conc.	Pre-Test Calibration ZERO	Pre-Test Calibration SPAN	Post Test Calibration ZERO	Post Test Calibration SPAN	Bias <5% (Check)	**Response time (Zero & Span)
Date:	NO_x						sec
	CO						sec
Start Time:	O_2			0.00	9.64		sec
1709	CO_2						sec
End Time:	THC						sec
1730	SO_2			-1.3	98.7		sec

RUN NO: 12	Calibration Gas / Conc.	Pre-Test Calibration ZERO	Pre-Test Calibration SPAN	Post Test Calibration ZERO	Post Test Calibration SPAN	Bias <5% (Check)	Drift <3% Of Span
Date:	NO_x						
	CO						
Start Time:	O_2			-0.01	9.64		
1751	CO_2						
End Time:	THC						
1812	SO_2			-1.3	98.6		

RUN NO:	Calibration Gas / Conc.	Pre-Test Calibration ZERO	Pre-Test Calibration SPAN	Post Test Calibration ZERO	Post Test Calibration SPAN	Bias <5% (Check)	Drift <3% Of Span
Date:	NO_x						
	CO						
Start Time:	O_2						
	CO_2						
End Time:	THC						
	SO_2						

RUN NO:	Calibration Gas / Conc.	Pre-Test Calibration ZERO	Pre-Test Calibration SPAN	Post Test Calibration ZERO	Post Test Calibration SPAN	Bias <5% (Check)	Drift <3% Of Span
Date:	NO_x						
	CO						
Start Time:	O_2						
	CO_2						
End Time:	THC						
	SO_2						

RUN NO:	Calibration Gas / Conc.	Pre-Test Calibration ZERO	Pre-Test Calibration SPAN	Post Test Calibration ZERO	Post Test Calibration SPAN	Bias <5% (Check)	Drift <3% Of Span
Date:	NO_x						
	CO						
Start Time:	O_2						
	CO_2						
End Time:	THC						
	SO_2						

Comments:

**Record response times for run 1 only for each component tested

Form # GSC-WP007-006
REV 2010-01, EFF 11/1/10

Method 205 Validation

Gas Mixing System	**Make/Model**	Environics 4040	**Serial No**	3100	**Range:**	—
Reference Analyzer	**Make/Model**	Servomex	**Serial No**	0-25% O_2	**Range:**	4054
High Concentration (%/ppm)	20.0% O_2	**Cylinder No.**	CC160502	**Expiration Date:**		12/14
Mid Concentration (%/ppm)	9.67% O_2	**Cylinder No.**	CC328603	**Expiration Date:**		5/14
Date:	3/21/13	**Time**				
Personnel:	DC					

Validation Data

Target Concentration	Run	Concentration (% or ppm)	Average
14.0 %	1	14.07	14.05
	2	14.03	
	3	14.04	
8.0 %	1	8.01	8.01
	2	8.01	
	3	8.00	

Mid-Gas Check

Target Concentration	Run	Concentration (% or ppm)	Average
9.67 %	1	9.68	9.68
	2	9.68	
	3	9.68	

GOLDEN SPECIALTY

Air Quality Test Report

APPENDIX E – Reference Method Data

Valero Refining-Texas, L.P.
Houston Refinery
Houston, TX

One-Minute Reference Method Data
Trailer 10

SRU C Incinerator

Date	Time	O_2_1	SO_2_1	Calibration Status
		System 1		
		%	ppm	
3/21/2012	9:39:00	-0.014	0.13	
3/21/2012	9:40:00	-0.016	0.13	Calibrating System 1
3/21/2012	9:41:00	-0.014	13.47	Calibrating System 1
3/21/2012	9:42:00	-0.021	207.37	Calibrating System 1
3/21/2012	9:43:00	-0.021	207.91	Calibrating System 1
3/21/2012	9:44:00	-0.019	198.34	Calibrating System 1
3/21/2012	9:45:00	-0.021	108.47	Calibrating System 1
3/21/2012	9:46:00	-0.021	100.11	Calibrating System 1
3/21/2012	9:47:00	-0.018	99.71	Calibrating System 1
3/21/2012	9:48:00	4.139	83.94	
3/21/2012	9:49:00	19.608	9.83	
3/21/2012	9:50:00	19.969	-1.32	Calibrating System 1
3/21/2012	9:51:00	19.999	-1.25	Calibrating System 1
3/21/2012	9:52:00	19.967	1.01	Calibrating System 1
3/21/2012	9:53:00	19.858	36.77	Calibrating System 1
3/21/2012	9:54:00	17.100	49.58	Calibrating System 1
3/21/2012	9:55:00	10.257	54.98	Calibrating System 1
3/21/2012	9:56:00	7.760	39.34	Calibrating System 1
3/21/2012	9:57:00	9.619	9.70	Calibrating System 1
3/21/2012	9:58:00	9.619	8.97	Calibrating System 1
3/21/2012	9:59:00	8.351	4.80	Calibrating System 1
3/21/2012	10:00:00	1.007	2.54	Calibrating System 1
3/21/2012	10:01:00	0.045	1.03	Calibrating System 1
3/21/2012	10:02:00	0.016	0.87	Calibrating System 1
3/21/2012	10:03:00	0.017	0.79	Calibrating System 1
3/21/2012	10:04:00	5.989	0.51	Calibrating System 1
3/21/2012	10:05:00	9.674	0.31	Calibrating System 1
3/21/2012	10:06:00	9.668	0.34	Calibrating System 1
3/21/2012	10:07:00	9.225	1.46	Calibrating System 1
3/21/2012	10:08:00	2.432	75.11	
3/21/2012	10:09:00	0.041	101.04	Calibrating System 1
3/21/2012	10:10:00	0.024	101.25	Calibrating System 1
3/21/2012	10:11:00	1.703	98.49	
3/21/2012	10:12:00	4.750	85.02	
3/21/2012	10:13:00	4.806	82.00	
3/21/2012	10:14:00	4.816	80.67	
3/21/2012	10:15:00	4.790	81.17	
3/21/2012	10:16:00	4.785	84.14	
3/21/2012	10:17:00	4.793	86.54	
3/21/2012	10:18:00	4.853	87.33	
3/21/2012	10:19:00	4.842	88.13	
3/21/2012	10:20:00	4.868	88.78	
3/21/2012	10:21:00	4.843	88.69	
3/21/2012	10:22:00	4.910	89.43	
3/21/2012	10:23:00	4.927	88.74	
3/21/2012	10:24:00	4.950	86.93	
3/21/2012	10:25:00	4.876	87.94	
3/21/2012	10:26:00	4.899	91.05	
3/21/2012	10:27:00	4.917	94.03	
3/21/2012	10:28:00	4.889	96.18	
3/21/2012	10:29:00	4.872	96.27	
3/21/2012	10:30:00	4.850	98.19	
3/21/2012	10:31:00	4.900	97.61	
3/21/2012	10:32:00	4.844	96.32	
3/21/2012	10:33:00	4.804	97.14	
3/21/2012	10:34:00	4.798	98.99	
3/21/2012	10:35:00	4.832	97.01	
3/21/2012	10:36:00	4.821	96.13	
3/21/2012	10:37:00	4.790	96.33	
3/21/2012	10:38:00	4.803	95.79	
3/21/2012	10:39:00	4.802	96.41	
3/21/2012	10:40:00	4.856	94.97	
3/21/2012	10:41:00	4.861	93.96	
3/21/2012	10:42:00	4.924	93.62	
3/21/2012	10:43:00	4.945	93.22	

Valero Refining-Texas, L.P.
Houston Refinery
Houston, TX

One-Minute Reference Method Data
Trailer 10

SRU C Incinerator

Date	Time	O_2_1 System 1	SO_2_1 System 1	Calibration Status
		%	ppm	
3/21/2012	10:44:00	1.028	43.52	
3/21/2012	10:45:00	0.015	4.45	Calibrating System 1
3/21/2012	10:46:00	0.012	2.85	Calibrating System 1
3/21/2012	10:47:00	0.007	2.69	Calibrating System 1
3/21/2012	10:48:00	0.007	2.84	Calibrating System 1
3/21/2012	10:49:00	7.409	2.59	Calibrating System 1
3/21/2012	10:50:00	9.645	0.07	Calibrating System 1
3/21/2012	10:51:00	9.655	-0.23	Calibrating System 1
3/21/2012	10:52:00	9.657	-0.36	Calibrating System 1
3/21/2012	10:53:00	9.659	-0.46	Calibrating System 1
3/21/2012	10:54:00	2.006	55.48	
3/21/2012	10:55:00	0.028	101.51	Calibrating System 1
3/21/2012	10:56:00	0.022	103.83	Calibrating System 1
3/21/2012	10:57:00	0.013	104.00	Calibrating System 1
3/21/2012	10:58:00	0.007	102.90	Calibrating System 1
3/21/2012	10:59:00	4.486	93.98	
3/21/2012	11:00:00	5.029	89.83	
3/21/2012	11:01:00	5.027	90.49	
3/21/2012	11:02:00	5.062	89.12	
3/21/2012	11:03:00	5.026	86.80	
3/21/2012	11:04:00	5.029	85.03	
3/21/2012	11:05:00	5.083	83.72	
3/21/2012	11:06:00	5.091	82.62	
3/21/2012	11:07:00	5.107	81.15	
3/21/2012	11:08:00	5.102	80.46	
3/21/2012	11:09:00	5.148	80.20	
3/21/2012	11:10:00	5.147	79.81	
3/21/2012	11:11:00	5.171	79.77	
3/21/2012	11:12:00	5.238	78.68	
3/21/2012	11:13:00	5.176	78.54	
3/21/2012	11:14:00	5.167	78.77	
3/21/2012	11:15:00	5.186	78.50	
3/21/2012	11:16:00	5.144	78.84	
3/21/2012	11:17:00	5.154	79.01	
3/21/2012	11:18:00	5.161	78.89	
3/21/2012	11:19:00	5.148	78.46	
3/21/2012	11:20:00	5.116	79.05	
3/21/2012	11:21:00	5.107	79.46	
3/21/2012	11:22:00	5.123	79.38	
3/21/2012	11:23:00	5.130	79.27	
3/21/2012	11:24:00	1.231	40.79	
3/21/2012	11:25:00	0.007	4.07	Calibrating System 1
3/21/2012	11:26:00	0.007	2.71	Calibrating System 1
3/21/2012	11:27:00	0.009	2.63	Calibrating System 1
3/21/2012	11:28:00	0.007	2.52	Calibrating System 1
3/21/2012	11:29:00	7.136	2.78	Calibrating System 1
3/21/2012	11:30:00	9.642	0.17	Calibrating System 1
3/21/2012	11:31:00	9.651	-0.06	Calibrating System 1
3/21/2012	11:32:00	9.656	-0.26	Calibrating System 1
3/21/2012	11:33:00	9.660	-0.31	Calibrating System 1
3/21/2012	11:34:00	2.238	52.71	
3/21/2012	11:35:00	0.021	97.62	Calibrating System 1
3/21/2012	11:36:00	0.012	99.11	Calibrating System 1
3/21/2012	11:37:00	0.013	99.69	Calibrating System 1
3/21/2012	11:38:00	0.012	99.79	Calibrating System 1
3/21/2012	11:39:00	4.391	84.20	
3/21/2012	11:40:00	5.131	78.58	
3/21/2012	11:41:00	5.162	78.03	
3/21/2012	11:42:00	5.157	77.64	
3/21/2012	11:43:00	5.111	77.34	
3/21/2012	11:44:00	5.199	76.92	
3/21/2012	11:45:00	5.169	76.48	
3/21/2012	11:46:00	5.145	76.30	
3/21/2012	11:47:00	5.103	77.30	
3/21/2012	11:48:00	5.163	76.95	

Valero Refining-Texas, L.P.
Houston Refinery
Houston, TX

One-Minute Reference Method Data
Trailer 10

SRU C Incinerator

Date	Time	O_2_1	SO_2_1	Calibration Status
		System 1		
		%	ppm	
3/21/2012	11:49:00	5.148	76.86	
3/21/2012	11:50:00	5.162	76.73	
3/21/2012	11:51:00	5.150	77.30	
3/21/2012	11:52:00	5.170	78.10	
3/21/2012	11:53:00	5.150	76.90	
3/21/2012	11:54:00	5.140	77.03	
3/21/2012	11:55:00	5.154	77.53	
3/21/2012	11:56:00	5.174	77.72	
3/21/2012	11:57:00	5.121	77.90	
3/21/2012	11:58:00	5.130	78.36	
3/21/2012	11:59:00	5.140	78.39	
3/21/2012	12:00:00	5.115	78.54	
3/21/2012	12:01:00	5.134	78.11	
3/21/2012	12:02:00	5.096	78.87	
3/21/2012	12:03:00	5.083	79.55	
3/21/2012	12:04:00	5.096	79.12	
3/21/2012	12:05:00	5.123	78.36	
3/21/2012	12:06:00	5.166	77.58	
3/21/2012	12:07:00	3.132	61.87	
3/21/2012	12:08:00	0.013	5.89	Calibrating System 1
3/21/2012	12:09:00	0.011	2.28	Calibrating System 1
3/21/2012	12:10:00	0.005	2.04	Calibrating System 1
3/21/2012	12:11:00	0.002	1.78	Calibrating System 1
3/21/2012	12:12:00	3.218	2.42	Calibrating System 1
3/21/2012	12:13:00	9.635	1.03	Calibrating System 1
3/21/2012	12:14:00	9.651	-0.30	Calibrating System 1
3/21/2012	12:15:00	9.655	-0.45	Calibrating System 1
3/21/2012	12:16:00	9.657	-0.51	Calibrating System 1
3/21/2012	12:17:00	6.291	14.79	
3/21/2012	12:18:00	0.030	92.68	Calibrating System 1
3/21/2012	12:19:00	0.018	99.07	Calibrating System 1
3/21/2012	12:20:00	0.014	99.63	Calibrating System 1
3/21/2012	12:21:00	0.008	99.43	Calibrating System 1
3/21/2012	12:22:00	2.227	93.97	
3/21/2012	12:23:00	5.172	81.47	
3/21/2012	12:24:00	5.137	81.84	
3/21/2012	12:25:00	5.097	82.10	
3/21/2012	12:26:00	5.114	81.64	
3/21/2012	12:27:00	5.097	81.78	
3/21/2012	12:28:00	5.144	81.21	
3/21/2012	12:29:00	5.143	80.82	
3/21/2012	12:30:00	5.136	80.48	
3/21/2012	12:31:00	5.148	80.40	
3/21/2012	12:32:00	5.140	79.10	
3/21/2012	12:33:00	5.171	78.39	
3/21/2012	12:34:00	5.135	78.56	
3/21/2012	12:35:00	5.105	78.42	
3/21/2012	12:36:00	5.114	78.40	
3/21/2012	12:37:00	5.071	79.31	
3/21/2012	12:38:00	5.026	81.23	
3/21/2012	12:39:00	4.987	83.22	
3/21/2012	12:40:00	4.984	84.10	
3/21/2012	12:41:00	4.913	84.34	
3/21/2012	12:42:00	4.923	84.71	
3/21/2012	12:43:00	4.896	84.79	
3/21/2012	12:44:00	4.885	85.00	
3/21/2012	12:45:00	4.891	85.36	
3/21/2012	12:46:00	4.850	85.99	
3/21/2012	12:47:00	4.879	87.30	
3/21/2012	12:48:00	3.129	73.74	
3/21/2012	12:49:00	0.012	5.66	Calibrating System 1
3/21/2012	12:50:00	0.009	1.95	Calibrating System 1
3/21/2012	12:51:00	0.009	2.05	Calibrating System 1
3/21/2012	12:52:00	0.006	1.94	Calibrating System 1
3/21/2012	12:53:00	3.313	3.31	

Valero Refining-Texas, L.P.
Houston Refinery
Houston, TX

One-Minute Reference Method Data
Trailer 10

SRU C Incinerator

Date	Time	O_2_1	SO_2_1	Calibration Status
		System 1		
		%	ppm	
3/21/2012	12:54:00	9.632	0.11	Calibrating System 1
3/21/2012	12:55:00	9.645	-0.48	Calibrating System 1
3/21/2012	12:56:00	9.648	-0.57	Calibrating System 1
3/21/2012	12:57:00	9.652	-0.63	Calibrating System 1
3/21/2012	12:58:00	6.204	15.76	
3/21/2012	12:59:00	0.026	93.99	Calibrating System 1
3/21/2012	13:00:00	0.014	98.95	Calibrating System 1
3/21/2012	13:01:00	0.011	99.12	Calibrating System 1
3/21/2012	13:02:00	0.010	99.48	Calibrating System 1
3/21/2012	13:03:00	2.208	96.98	
3/21/2012	13:04:00	5.082	83.86	
3/21/2012	13:05:00	5.048	81.54	
3/21/2012	13:06:00	5.062	80.40	
3/21/2012	13:07:00	5.014	81.42	
3/21/2012	13:08:00	5.019	83.35	
3/21/2012	13:09:00	5.059	85.23	
3/21/2012	13:10:00	5.106	86.77	
3/21/2012	13:11:00	5.055	88.25	
3/21/2012	13:12:00	5.054	91.37	
3/21/2012	13:13:00	5.037	94.52	
3/21/2012	13:14:00	4.924	96.54	
3/21/2012	13:15:00	4.899	97.03	
3/21/2012	13:16:00	4.926	95.93	
3/21/2012	13:17:00	4.880	95.08	
3/21/2012	13:18:00	4.769	93.93	
3/21/2012	13:19:00	4.741	94.44	
3/21/2012	13:20:00	4.762	94.08	
3/21/2012	13:21:00	4.760	90.69	
3/21/2012	13:22:00	4.767	86.92	
3/21/2012	13:23:00	4.744	85.88	
3/21/2012	13:24:00	4.779	85.54	
3/21/2012	13:25:00	4.825	85.18	
3/21/2012	13:26:00	4.875	84.52	
3/21/2012	13:27:00	4.878	84.31	
3/21/2012	13:28:00	4.988	83.05	
3/21/2012	13:29:00	3.214	66.99	
3/21/2012	13:30:00	0.013	5.56	Calibrating System 1
3/21/2012	13:31:00	0.004	1.78	Calibrating System 1
3/21/2012	13:32:00	0.002	1.73	Calibrating System 1
3/21/2012	13:33:00	0.003	1.72	Calibrating System 1
3/21/2012	13:34:00	3.357	2.33	Calibrating System 1
3/21/2012	13:35:00	9.626	0.94	Calibrating System 1
3/21/2012	13:36:00	9.639	-0.53	Calibrating System 1
3/21/2012	13:37:00	9.644	-0.79	Calibrating System 1
3/21/2012	13:38:00	9.644	-0.86	Calibrating System 1
3/21/2012	13:39:00	6.167	14.93	
3/21/2012	13:40:00	0.029	93.20	Calibrating System 1
3/21/2012	13:41:00	0.013	98.74	Calibrating System 1
3/21/2012	13:42:00	0.006	98.72	Calibrating System 1
3/21/2012	13:43:00	0.004	99.17	Calibrating System 1
3/21/2012	13:44:00	2.189	98.00	
3/21/2012	13:45:00	4.942	89.00	
3/21/2012	13:46:00	4.962	88.26	
3/21/2012	13:47:00	4.967	87.50	
3/21/2012	13:48:00	5.035	86.39	
3/21/2012	13:49:00	5.139	85.67	
3/21/2012	13:50:00	5.216	84.77	
3/21/2012	13:51:00	5.209	84.84	
3/21/2012	13:52:00	5.262	85.33	
3/21/2012	13:53:00	5.319	87.19	
3/21/2012	13:54:00	5.395	89.96	
3/21/2012	13:55:00	5.285	91.57	
3/21/2012	13:56:00	5.294	94.10	
3/21/2012	13:57:00	5.269	96.26	
3/21/2012	13:58:00	5.218	100.15	

Valero Refining-Texas, L.P.
Houston Refinery
Houston, TX

One-Minute Reference Method Data
Trailer 10

SRU C Incinerator

Date	Time	O_2_1	SO_2_1	Calibration Status
		System 1		
		%	ppm	
3/21/2012	13:59:00	5.171	103.77	
3/21/2012	14:00:00	5.150	105.87	
3/21/2012	14:01:00	5.062	108.24	
3/21/2012	14:02:00	5.095	110.43	
3/21/2012	14:03:00	5.057	111.44	
3/21/2012	14:04:00	5.041	111.43	
3/21/2012	14:05:00	4.944	112.89	
3/21/2012	14:06:00	4.854	115.41	
3/21/2012	14:07:00	4.820	115.49	
3/21/2012	14:08:00	4.764	111.58	
3/21/2012	14:09:00	4.698	108.52	
3/21/2012	14:10:00	3.001	87.58	
3/21/2012	14:11:00	0.012	6.12	Calibrating System 1
3/21/2012	14:12:00	0.008	1.70	Calibrating System 1
3/21/2012	14:13:00	0.002	1.49	Calibrating System 1
3/21/2012	14:14:00	0.001	1.34	Calibrating System 1
3/21/2012	14:15:00	3.324	2.19	Calibrating System 1
3/21/2012	14:16:00	9.620	0.91	Calibrating System 1
3/21/2012	14:17:00	9.632	-0.65	Calibrating System 1
3/21/2012	14:18:00	9.635	-0.82	Calibrating System 1
3/21/2012	14:19:00	9.639	-0.95	Calibrating System 1
3/21/2012	14:20:00	6.196	15.65	
3/21/2012	14:21:00	0.028	93.44	Calibrating System 1
3/21/2012	14:22:00	0.018	98.62	Calibrating System 1
3/21/2012	14:23:00	0.009	98.82	Calibrating System 1
3/21/2012	14:24:00	0.005	98.40	Calibrating System 1
3/21/2012	14:25:00	2.267	97.83	
3/21/2012	14:26:00	5.091	90.90	
3/21/2012	14:27:00	5.195	88.17	
3/21/2012	14:28:00	5.144	86.36	
3/21/2012	14:29:00	5.173	86.38	
3/21/2012	14:30:00	5.155	85.83	
3/21/2012	14:31:00	5.063	88.72	
3/21/2012	14:32:00	5.091	91.89	
3/21/2012	14:33:00	5.034	93.95	
3/21/2012	14:34:00	4.979	97.87	
3/21/2012	14:35:00	4.929	102.45	
3/21/2012	14:36:00	4.933	106.17	
3/21/2012	14:37:00	4.855	110.40	
3/21/2012	14:38:00	4.798	111.69	
3/21/2012	14:39:00	4.698	111.87	
3/21/2012	14:40:00	4.671	109.84	
3/21/2012	14:41:00	4.599	110.56	
3/21/2012	14:42:00	4.595	107.66	
3/21/2012	14:43:00	4.636	102.84	
3/21/2012	14:44:00	4.563	100.22	
3/21/2012	14:45:00	4.576	98.08	
3/21/2012	14:46:00	4.628	96.90	
3/21/2012	14:47:00	4.642	96.94	
3/21/2012	14:48:00	4.696	96.22	
3/21/2012	14:49:00	4.798	111.69	
3/21/2012	14:50:00	4.698	111.87	
3/21/2012	14:51:00	3.132	61.87	
3/21/2012	14:52:00	0.013	5.89	Calibrating System 1
3/21/2012	14:53:00	0.011	2.28	Calibrating System 1
3/21/2012	14:54:00	0.005	2.04	Calibrating System 1
3/21/2012	14:55:00	0.002	1.78	Calibrating System 1
3/21/2012	14:56:00	3.218	2.42	Calibrating System 1
3/21/2012	14:57:00	9.635	1.03	Calibrating System 1
3/21/2012	14:58:00	9.651	-0.30	Calibrating System 1
3/21/2012	14:59:00	9.655	-0.45	Calibrating System 1
3/21/2012	15:00:00	9.657	-0.51	Calibrating System 1
3/21/2012	15:01:00	6.291	14.79	
3/21/2012	15:02:00	0.030	92.68	Calibrating System 1
3/21/2012	15:03:00	0.018	99.07	Calibrating System 1

Valero Refining-Texas, L.P.
Houston Refinery
Houston, TX

One-Minute Reference Method Data
Trailer 10

SRU C Incinerator

Date	Time	O_2_1	SO_2_1	Calibration Status
		System 1		
		%	ppm	
3/21/2012	15:04:00	0.014	99.63	Calibrating System 1
3/21/2012	15:05:00	0.005	98.40	Calibrating System 1
3/21/2012	15:06:00	2.267	97.83	
3/21/2012	15:07:00	4.772	98.00	
3/21/2012	15:08:00	4.895	99.14	
3/21/2012	15:09:00	4.822	98.94	
3/21/2012	15:10:00	4.836	98.38	
3/21/2012	15:11:00	4.927	97.08	
3/21/2012	15:12:00	4.883	95.62	
3/21/2012	15:13:00	5.020	92.97	
3/21/2012	15:14:00	4.894	92.56	
3/21/2012	15:15:00	4.886	94.68	
3/21/2012	15:16:00	4.890	95.53	
3/21/2012	15:17:00	4.927	95.06	
3/21/2012	15:18:00	4.929	95.07	
3/21/2012	15:19:00	4.857	95.07	
3/21/2012	15:20:00	4.937	95.25	
3/21/2012	15:21:00	4.809	96.88	
3/21/2012	15:22:00	4.846	98.41	
3/21/2012	15:23:00	4.908	98.66	
3/21/2012	15:24:00	4.885	97.66	
3/21/2012	15:25:00	4.986	95.39	
3/21/2012	15:26:00	4.998	94.47	
3/21/2012	15:27:00	4.951	95.37	
3/21/2012	15:28:00	4.896	96.57	
3/21/2012	15:29:00	4.980	97.48	
3/21/2012	15:30:00	0.567	25.00	
3/21/2012	15:31:00	0.009	1.68	Calibrating System 1
3/21/2012	15:32:00	0.003	1.24	Calibrating System 1
3/21/2012	15:33:00	0.002	1.00	Calibrating System 1
3/21/2012	15:34:00	0.110	0.97	Calibrating System 1
3/21/2012	15:35:00	8.746	2.32	Calibrating System 1
3/21/2012	15:36:00	9.627	-0.49	Calibrating System 1
3/21/2012	15:37:00	9.632	-0.89	Calibrating System 1
3/21/2012	15:38:00	9.635	-1.05	Calibrating System 1
3/21/2012	15:39:00	9.640	-1.11	Calibrating System 1
3/21/2012	15:40:00	0.676	66.14	
3/21/2012	15:41:00	0.020	97.72	Calibrating System 1
3/21/2012	15:42:00	0.010	98.09	Calibrating System 1
3/21/2012	15:43:00	0.005	98.67	Calibrating System 1
3/21/2012	15:44:00	0.169	98.85	Calibrating System 1
3/21/2012	15:45:00	5.007	112.37	
3/21/2012	15:46:00	4.988	118.41	
3/21/2012	15:47:00	4.993	122.91	
3/21/2012	15:48:00	4.937	124.45	
3/21/2012	15:49:00	4.902	124.11	
3/21/2012	15:50:00	4.898	121.04	
3/21/2012	15:51:00	4.861	116.79	
3/21/2012	15:52:00	4.905	114.58	
3/21/2012	15:53:00	4.921	109.88	
3/21/2012	15:54:00	4.894	104.80	
3/21/2012	15:55:00	4.888	105.08	
3/21/2012	15:56:00	4.965	106.69	
3/21/2012	15:57:00	5.027	105.96	
3/21/2012	15:58:00	5.155	104.94	
3/21/2012	15:59:00	5.207	102.75	
3/21/2012	16:00:00	5.198	102.42	
3/21/2012	16:01:00	5.243	104.22	
3/21/2012	16:02:00	5.149	107.60	
3/21/2012	16:03:00	5.146	111.75	
3/21/2012	16:04:00	5.028	117.28	
3/21/2012	16:05:00	4.968	120.67	
3/21/2012	16:06:00	4.919	121.94	
3/21/2012	16:07:00	4.826	122.36	
3/21/2012	16:08:00	4.728	122.08	

Valero Refining-Texas, L.P.
Houston Refinery
Houston, TX

One-Minute Reference Method Data
Trailer 10

SRU C Incinerator

Date	Time	O_2_1	SO_2_1	Calibration Status
		System 1		
		%	ppm	
3/21/2012	16:09:00	4.630	123.59	
3/21/2012	16:10:00	4.530	117.43	
3/21/2012	16:11:00	0.462	32.48	
3/21/2012	16:12:00	0.010	1.91	Calibrating System 1
3/21/2012	16:13:00	0.004	1.18	Calibrating System 1
3/21/2012	16:14:00	0.001	0.90	Calibrating System 1
3/21/2012	16:15:00	0.101	0.85	Calibrating System 1
3/21/2012	16:16:00	8.710	2.42	Calibrating System 1
3/21/2012	16:17:00	9.625	-0.68	Calibrating System 1
3/21/2012	16:18:00	9.632	-0.90	Calibrating System 1
3/21/2012	16:19:00	9.634	-1.05	Calibrating System 1
3/21/2012	16:20:00	9.636	-1.14	Calibrating System 1
3/21/2012	16:21:00	0.701	65.29	
3/21/2012	16:22:00	0.019	97.60	Calibrating System 1
3/21/2012	16:23:00	0.012	98.79	Calibrating System 1
3/21/2012	16:24:00	0.006	98.84	Calibrating System 1
3/21/2012	16:25:00	0.147	98.68	Calibrating System 1
3/21/2012	16:26:00	5.172	93.72	
3/21/2012	16:27:00	5.300	89.21	
3/21/2012	16:28:00	5.261	88.34	
3/21/2012	16:29:00	5.266	88.42	
3/21/2012	16:30:00	5.239	88.50	
3/21/2012	16:31:00	5.252	91.77	
3/21/2012	16:32:00	5.222	96.95	
3/21/2012	16:33:00	5.232	100.24	
3/21/2012	16:34:00	5.226	100.33	
3/21/2012	16:35:00	5.178	100.74	
3/21/2012	16:36:00	5.128	103.33	
3/21/2012	16:37:00	5.135	104.35	
3/21/2012	16:38:00	5.071	104.11	
3/21/2012	16:39:00	4.991	103.41	
3/21/2012	16:40:00	4.998	102.75	
3/21/2012	16:41:00	5.006	98.02	
3/21/2012	16:42:00	4.992	90.57	
3/21/2012	16:43:00	4.957	90.08	
3/21/2012	16:44:00	4.980	91.96	
3/21/2012	16:45:00	4.865	96.60	
3/21/2012	16:46:00	4.876	102.23	
3/21/2012	16:47:00	4.905	107.88	
3/21/2012	16:48:00	4.915	111.62	
3/21/2012	16:49:00	4.836	113.23	
3/21/2012	16:50:00	4.900	113.54	
3/21/2012	16:51:00	4.846	103.66	
3/21/2012	16:52:00	0.479	31.33	
3/21/2012	16:53:00	0.005	1.93	Calibrating System 1
3/21/2012	16:54:00	0.004	0.94	Calibrating System 1
3/21/2012	16:55:00	0.005	0.79	Calibrating System 1
3/21/2012	16:56:00	0.121	0.81	Calibrating System 1
3/21/2012	16:57:00	8.760	2.53	Calibrating System 1
3/21/2012	16:58:00	9.626	-0.71	Calibrating System 1
3/21/2012	16:59:00	9.632	-0.98	Calibrating System 1
3/21/2012	17:00:00	9.637	-1.13	Calibrating System 1
3/21/2012	17:01:00	9.639	-1.12	Calibrating System 1
3/21/2012	17:02:00	0.652	66.27	
3/21/2012	17:03:00	0.014	97.35	Calibrating System 1
3/21/2012	17:04:00	0.008	98.35	Calibrating System 1
3/21/2012	17:05:00	0.008	98.68	Calibrating System 1
3/21/2012	17:06:00	0.172	98.74	Calibrating System 1
3/21/2012	17:07:00	5.037	90.54	
3/21/2012	17:08:00	5.051	86.22	
3/21/2012	17:09:00	5.100	86.19	
3/21/2012	17:10:00	5.048	86.75	
3/21/2012	17:11:00	5.013	87.26	
3/21/2012	17:12:00	5.078	86.72	
3/21/2012	17:13:00	5.051	85.21	

Valero Refining-Texas, L.P.
Houston Refinery
Houston, TX

One-Minute Reference Method Data
Trailer 10

SRU C Incinerator

Date	Time	O_2_1 System 1	SO_2_1 System 1	Calibration Status
		%	ppm	
3/21/2012	17:14:00	5.068	84.66	
3/21/2012	17:15:00	5.061	83.93	
3/21/2012	17:16:00	5.059	83.98	
3/21/2012	17:17:00	5.057	84.44	
3/21/2012	17:18:00	5.029	84.87	
3/21/2012	17:19:00	5.054	85.15	
3/21/2012	17:20:00	5.044	84.98	
3/21/2012	17:21:00	5.014	85.08	
3/21/2012	17:22:00	5.048	85.09	
3/21/2012	17:23:00	5.032	84.78	
3/21/2012	17:24:00	5.085	83.90	
3/21/2012	17:25:00	5.074	84.46	
3/21/2012	17:26:00	5.089	83.55	
3/21/2012	17:27:00	5.095	83.50	
3/21/2012	17:28:00	5.104	83.46	
3/21/2012	17:29:00	5.116	83.41	
3/21/2012	17:30:00	5.067	83.43	
3/21/2012	17:31:00	5.073	83.84	
3/21/2012	17:32:00	4.932	83.86	
3/21/2012	17:33:00	0.476	27.35	
3/21/2012	17:34:00	0.004	1.49	Calibrating System 1
3/21/2012	17:35:00	0.000	0.63	Calibrating System 1
3/21/2012	17:36:00	-0.001	0.47	Calibrating System 1
3/21/2012	17:37:00	0.100	0.30	Calibrating System 1
3/21/2012	17:38:00	5.754	1.73	Calibrating System 1
3/21/2012	17:39:00	9.626	-0.61	Calibrating System 1
3/21/2012	17:40:00	9.630	-1.03	Calibrating System 1
3/21/2012	17:41:00	9.633	-1.10	Calibrating System 1
3/21/2012	17:42:00	9.635	-1.25	Calibrating System 1
3/21/2012	17:43:00	0.649	67.59	
3/21/2012	17:44:00	0.015	97.51	Calibrating System 1
3/21/2012	17:45:00	0.006	98.04	Calibrating System 1
3/21/2012	17:46:00	0.001	98.13	Calibrating System 1
3/21/2012	17:47:00	0.148	98.70	Calibrating System 1
3/21/2012	17:48:00	4.744	109.34	
3/21/2012	17:49:00	4.837	113.04	
3/21/2012	17:50:00	4.930	110.96	
3/21/2012	17:51:00	4.870	106.41	
3/21/2012	17:52:00	4.745	95.51	
3/21/2012	17:53:00	4.618	90.06	
3/21/2012	17:54:00	4.563	88.35	
3/21/2012	17:55:00	4.645	87.13	
3/21/2012	17:56:00	4.725	85.67	
3/21/2012	17:57:00	4.827	90.79	
3/21/2012	17:58:00	4.936	104.93	
3/21/2012	17:59:00	5.061	105.17	
3/21/2012	18:00:00	5.071	105.93	
3/21/2012	18:01:00	5.183	103.53	
3/21/2012	18:02:00	5.144	101.07	
3/21/2012	18:03:00	5.171	99.54	
3/21/2012	18:04:00	5.161	100.77	
3/21/2012	18:05:00	5.163	99.95	
3/21/2012	18:06:00	5.189	100.70	
3/21/2012	18:07:00	5.190	98.04	
3/21/2012	18:08:00	5.189	94.41	
3/21/2012	18:09:00	5.224	92.22	
3/21/2012	18:10:00	5.159	83.58	
3/21/2012	18:11:00	5.177	76.50	
3/21/2012	18:12:00	5.085	75.19	
3/21/2012	18:13:00	4.998	74.68	
3/21/2012	18:14:00	0.470	24.56	
3/21/2012	18:15:00	0.004	1.00	Calibrating System 1
3/21/2012	18:16:00	-0.001	0.45	Calibrating System 1
3/21/2012	18:17:00	-0.007	0.30	Calibrating System 1
3/21/2012	18:18:00	0.091	0.13	Calibrating System 1

Valero Refining-Texas, L.P.
Houston Refinery
Houston, TX

One-Minute Reference Method Data
Trailer 10

SRU C Incinerator

Date	Time	O_2_1	SO_2_1	Calibration Status
		System 1		
		%	ppm	
3/21/2012	18:19:00	8.720	1.47	Calibrating System 1
3/21/2012	18:20:00	9.626	-0.83	Calibrating System 1
3/21/2012	18:21:00	9.630	-1.12	Calibrating System 1
3/21/2012	18:22:00	9.634	-1.27	Calibrating System 1
3/21/2012	18:23:00	9.636	-1.33	Calibrating System 1
3/21/2012	18:24:00	0.723	66.13	
3/21/2012	18:25:00	0.014	97.60	Calibrating System 1
3/21/2012	18:26:00	0.005	98.65	Calibrating System 1
3/21/2012	18:27:00	-0.001	98.39	Calibrating System 1
3/21/2012	18:28:00	0.142	98.61	Calibrating System 1
3/21/2012	18:29:00	4.852	92.86	

GOLDEN SPECIALTY

Air Quality Test Report

APPENDIX F – CEMS Data

Valero Refining-Texas, L.P.
Houston Refinery
Houston, TX

CEMS RUN DATA

SRU C Incinerator

Date/Time	O_2 (%)	SO_2 (ppm)	SO_2 (ppm, corrected)
21-Mar-12 10:15:00	5.43	74.8	101.1
21-Mar-12 10:16:00	5.41	75.1	101.3
21-Mar-12 10:17:00	5.39	74.6	100.5
21-Mar-12 10:18:00	5.39	74.8	100.8
21-Mar-12 10:19:00	5.38	75.0	100.9
21-Mar-12 10:20:00	5.35	75.3	101.2
21-Mar-12 10:21:00	5.35	75.4	101.4
21-Mar-12 10:22:00	5.34	75.4	101.3
21-Mar-12 10:23:00	5.35	75.1	100.9
21-Mar-12 10:24:00	5.36	74.8	100.6
21-Mar-12 10:25:00	5.33	75.1	100.8
21-Mar-12 10:26:00	5.36	75.2	101.1
21-Mar-12 10:27:00	5.40	74.7	100.7
21-Mar-12 10:28:00	5.39	74.2	100.0
21-Mar-12 10:29:00	5.38	74.5	100.2
21-Mar-12 10:30:00	5.40	74.6	100.6
21-Mar-12 10:31:00	5.43	74.3	100.3
21-Mar-12 10:32:00	5.38	74.3	100.1
21-Mar-12 10:33:00	5.38	74.2	99.9
21-Mar-12 10:34:00	5.40	73.9	99.7
21-Mar-12 10:35:00	5.38	73.6	99.1
Run 1 Average:	**5.38**	**74.7**	**100.6**

Date/Time	O_2 (%)	SO_2 (ppm)	SO_2 (ppm, corrected)
21-Mar-12 11:02:00	5.40	73.6	99.6
21-Mar-12 11:03:00	5.39	73.5	99.6
21-Mar-12 11:04:00	5.35	74.5	100.1
21-Mar-12 11:05:00	5.34	74.3	99.8
21-Mar-12 11:06:00	5.36	73.4	98.7
21-Mar-12 11:07:00	5.38	73.4	98.8
21-Mar-12 11:08:00	5.42	73.2	98.8
21-Mar-12 11:09:00	5.41	73.1	98.6
21-Mar-12 11:10:00	5.41	72.8	98.3
21-Mar-12 11:11:00	5.39	72.9	98.2
21-Mar-12 11:12:00	5.38	72.5	97.7
21-Mar-12 11:13:00	5.42	72.7	98.2
21-Mar-12 11:14:00	5.38	73.2	98.6
21-Mar-12 11:15:00	5.42	73.0	98.6
21-Mar-12 11:16:00	5.39	73.1	98.5
21-Mar-12 11:17:00	5.37	73.5	98.9
21-Mar-12 11:18:00	5.41	73.5	99.6
21-Mar-12 11:19:00	5.43	73.6	99.7
21-Mar-12 11:20:00	5.41	73.6	99.3
21-Mar-12 11:21:00	5.40	74.6	100.5
21-Mar-12 11:22:00	5.39	75.5	101.7
Run 2 Average:	**5.39**	**73.6**	**99.1**

Date/Time	O_2 (%)	SO_2 (ppm)	SO_2 (ppm, corrected)
21-Mar-12 11:42:00	5.20	78.8	99.6
21-Mar-12 11:43:00	5.18	78.8	99.6
21-Mar-12 11:44:00	5.15	79.4	100.1
21-Mar-12 11:45:00	5.13	79.8	99.8
21-Mar-12 11:46:00	5.15	80.0	98.7
21-Mar-12 11:47:00	5.09	80.4	98.8
21-Mar-12 11:48:00	5.06	81.2	98.8
21-Mar-12 11:49:00	5.12	82.4	98.6
21-Mar-12 11:50:00	5.11	83.9	98.3
21-Mar-12 11:51:00	5.08	85.7	98.2
21-Mar-12 11:52:00	5.08	85.2	97.7
21-Mar-12 11:53:00	5.04	85.6	98.2
21-Mar-12 11:54:00	5.09	87.0	98.6
21-Mar-12 11:55:00	5.11	89.5	98.6
21-Mar-12 11:56:00	5.13	90.8	98.5
21-Mar-12 11:57:00	5.13	91.1	98.9
21-Mar-12 11:58:00	5.15	90.5	99.6
21-Mar-12 11:59:00	5.19	89.2	99.7
21-Mar-12 12:00:00	5.20	87.9	99.3
21-Mar-12 12:01:00	5.19	86.9	100.5
21-Mar-12 12:02:00	5.20	85.3	101.7
Run 3 Average:	**5.13**	**84.7**	**99.1**

Date/Time	O_2 (%)	SO_2 (ppm)	SO_2 (ppm, corrected)
21-Mar-12 12:25:00	5.02	80.3	105.7
21-Mar-12 12:26:00	5.07	79.3	104.7
21-Mar-12 12:27:00	5.13	79.0	104.7
21-Mar-12 12:28:00	5.15	78.8	104.5
21-Mar-12 12:29:00	5.20	78.3	104.3
21-Mar-12 12:30:00	5.25	77.6	103.6
21-Mar-12 12:31:00	5.29	76.4	102.3
21-Mar-12 12:32:00	5.29	76.6	102.6
21-Mar-12 12:33:00	5.28	77.6	103.9
21-Mar-12 12:34:00	5.26	79.1	105.7
21-Mar-12 12:35:00	5.28	79.9	106.9
21-Mar-12 12:36:00	5.29	80.7	108.1
21-Mar-12 12:37:00	5.22	82.8	110.4
21-Mar-12 12:38:00	5.17	86.3	114.7
21-Mar-12 12:39:00	5.19	86.9	115.6
21-Mar-12 12:40:00	5.19	86.4	115.0
21-Mar-12 12:41:00	5.16	86.8	115.3
21-Mar-12 12:42:00	5.16	86.8	115.0
21-Mar-12 12:43:00	5.16	85.9	114.0
21-Mar-12 12:44:00	5.16	85.4	113.4
21-Mar-12 12:45:00	5.17	84.3	112.0
Run 4 Average:	**5.19**	**81.7**	**108.7**

Date/Time	O_2 (%)	SO_2 (ppm)	SO_2 (ppm, corrected)
21-Mar-12 13:06:00	5.21	104.0	138.5
21-Mar-12 13:07:00	5.12	106.1	140.5
21-Mar-12 13:08:00	5.08	106.5	140.7
21-Mar-12 13:09:00	5.02	105.2	138.5
21-Mar-12 13:10:00	4.95	102.9	134.8
21-Mar-12 13:11:00	4.90	100.4	131.1
21-Mar-12 13:12:00	4.91	98.8	129.2
21-Mar-12 13:13:00	4.91	96.0	125.5
21-Mar-12 13:14:00	4.97	92.8	121.4
21-Mar-12 13:15:00	4.98	90.8	119.2
21-Mar-12 13:16:00	4.98	90.6	118.9
21-Mar-12 13:17:00	4.95	91.7	120.2
21-Mar-12 13:18:00	4.93	91.7	120.0
21-Mar-12 13:19:00	4.97	92.0	120.7
21-Mar-12 13:20:00	5.01	92.8	122.0
21-Mar-12 13:21:00	5.03	94.2	124.1
21-Mar-12 13:22:00	5.07	95.1	125.5
21-Mar-12 13:23:00	5.13	94.5	125.6
21-Mar-12 13:24:00	5.19	93.5	124.4
21-Mar-12 13:25:00	5.26	91.2	121.8
21-Mar-12 13:26:00	5.31	88.4	118.5
Run 5 Average:	**5.04**	**98.1**	**126.7**

Date/Time	O_2 (%)	SO_2 (ppm)	SO_2 (ppm, corrected)
21-Mar-12 13:47:00	4.85	92.5	120.4
21-Mar-12 13:48:00	4.88	91.0	118.7
21-Mar-12 13:49:00	4.87	91.0	118.7
21-Mar-12 13:50:00	4.94	90.7	118.7
21-Mar-12 13:51:00	5.07	89.3	117.9
21-Mar-12 13:52:00	5.06	88.7	117.0
21-Mar-12 13:53:00	5.04	89.6	118.1
21-Mar-12 13:54:00	5.09	89.5	118.2
21-Mar-12 13:55:00	5.14	88.0	116.7
21-Mar-12 13:56:00	5.19	87.0	115.7
21-Mar-12 13:57:00	5.25	85.7	114.5
21-Mar-12 13:58:00	5.27	85.2	113.9
21-Mar-12 13:59:00	5.24	85.4	114.0
21-Mar-12 14:00:00	5.20	85.7	114.1
21-Mar-12 14:01:00	5.21	85.2	113.4
21-Mar-12 14:02:00	5.24	85.2	113.7
21-Mar-12 14:03:00	5.26	85.2	113.8
21-Mar-12 14:04:00	5.27	85.0	113.6
21-Mar-12 14:05:00	5.24	85.2	113.7
21-Mar-12 14:06:00	5.25	85.6	114.4
21-Mar-12 14:07:00	5.20	87.1	115.9
Run 6 Average:	**5.13**	**87.5**	**116.0**

Valero Refining-Texas, L.P.
Houston Refinery
Houston, TX

CEMS RUN DATA

SRU C Incinerator

Date/Time	O_2 (%)	SO_2 (ppm)	SO_2 (ppm, corrected)
21-Mar-12 14:28:00	5.18	90.5	120.3
21-Mar-12 14:29:00	5.24	88.9	118.7
21-Mar-12 14:30:00	5.26	88.6	118.4
21-Mar-12 14:31:00	5.21	89.6	119.3
21-Mar-12 14:32:00	5.21	90.4	120.4
21-Mar-12 14:33:00	5.25	91.3	121.9
21-Mar-12 14:34:00	5.25	91.9	122.7
21-Mar-12 14:35:00	5.23	92.3	123.0
21-Mar-12 14:36:00	5.22	92.8	123.7
21-Mar-12 14:37:00	5.23	93.9	125.2
21-Mar-12 14:38:00	5.20	95.0	126.5
21-Mar-12 14:39:00	5.19	95.2	127.9
21-Mar-12 14:40:00	5.20	96.2	128.1
21-Mar-12 14:41:00	5.25	96.8	129.3
21-Mar-12 14:42:00	5.31	98.7	132.4
21-Mar-12 14:43:00	5.29	100.5	134.6
21-Mar-12 14:44:00	5.28	102.2	136.7
21-Mar-12 14:45:00	5.37	102.2	137.6
21-Mar-12 14:46:00	5.38	100.6	135.4
21-Mar-12 14:47:00	5.38	99.3	133.8
21-Mar-12 14:48:00	5.34	100.9	135.5
Run 7 Average:	**5.26**	**95.2**	**127.2**

Date/Time	O_2 (%)	SO_2 (ppm)	SO_2 (ppm, corrected)
21-Mar-12 15:08:00	5.35	107.9	145.0
21-Mar-12 15:09:00	5.24	111.0	148.2
21-Mar-12 15:10:00	5.17	112.3	149.1
21-Mar-12 15:11:00	5.07	112.3	148.3
21-Mar-12 15:12:00	4.98	112.4	147.6
21-Mar-12 15:13:00	4.85	113.4	147.7
21-Mar-12 15:14:00	4.79	107.9	139.9
21-Mar-12 15:15:00	4.85	102.8	133.9
21-Mar-12 15:16:00	4.93	110.9	145.2
21-Mar-12 15:17:00	5.01	122.6	161.2
21-Mar-12 15:18:00	5.02	126.0	165.8
21-Mar-12 15:19:00	4.96	120.9	158.5
21-Mar-12 15:20:00	4.94	110.7	145.0
21-Mar-12 15:21:00	4.93	103.3	135.2
21-Mar-12 15:22:00	4.95	98.4	128.9
21-Mar-12 15:23:00	5.00	95.5	125.5
21-Mar-12 15:24:00	5.07	94.9	124.1
21-Mar-12 15:25:00	5.16	91.9	121.9
21-Mar-12 15:26:00	5.27	89.7	120.0
21-Mar-12 15:27:00	5.34	88.1	118.3
21-Mar-12 15:28:00	5.35	87.0	116.9
Run 8 Average:	**5.06**	**105.7**	**139.3**

Date/Time	O_2 (%)	SO_2 (ppm)	SO_2 (ppm, corrected)
21-Mar-12 15:48:00	5.20	86.2	114.7
21-Mar-12 15:49:00	5.17	90.3	120.0
21-Mar-12 15:50:00	5.20	95.2	126.7
21-Mar-12 15:51:00	5.17	99.8	132.5
21-Mar-12 15:52:00	5.15	102.4	135.9
21-Mar-12 15:53:00	5.11	104.0	137.7
21-Mar-12 15:54:00	5.18	101.9	135.5
21-Mar-12 15:55:00	5.18	94.5	125.6
21-Mar-12 15:56:00	5.16	88.9	118.0
21-Mar-12 15:57:00	5.24	87.3	116.5
21-Mar-12 15:58:00	5.31	94.2	126.3
21-Mar-12 15:59:00	5.45	105.0	142.1
21-Mar-12 16:00:00	5.59	112.4	153.4
21-Mar-12 16:01:00	5.58	112.2	153.0
21-Mar-12 16:02:00	5.53	102.0	138.7
21-Mar-12 16:03:00	5.45	92.1	124.6
21-Mar-12 16:04:00	5.38	87.4	117.6
21-Mar-12 16:05:00	5.29	85.7	114.8
21-Mar-12 16:06:00	5.30	84.4	113.1
21-Mar-12 16:07:00	5.29	82.8	110.9
21-Mar-12 16:08:00	5.25	82.3	109.9
Run 9 Average:	**5.29**	**94.8**	**127.0**

Date/Time	O_2 (%)	SO_2 (ppm)	SO_2 (ppm, corrected)
21-Mar-12 16:29:00	5.31	78.6	105.4
21-Mar-12 16:30:00	5.32	78.2	104.8
21-Mar-12 16:31:00	5.31	78.1	104.7
21-Mar-12 16:32:00	5.32	77.4	103.8
21-Mar-12 16:33:00	5.31	77.5	103.9
21-Mar-12 16:34:00	5.31	78.0	104.6
21-Mar-12 16:35:00	5.30	78.0	104.5
21-Mar-12 16:36:00	5.25	78.6	105.0
21-Mar-12 16:37:00	5.25	78.7	105.1
21-Mar-12 16:38:00	5.25	78.5	104.9
21-Mar-12 16:39:00	5.24	78.5	104.8
21-Mar-12 16:40:00	5.14	79.3	105.2
21-Mar-12 16:41:00	5.14	79.5	105.4
21-Mar-12 16:42:00	5.14	80.8	107.1
21-Mar-12 16:43:00	5.11	82.6	109.4
21-Mar-12 16:44:00	5.07	84.0	110.8
21-Mar-12 16:45:00	5.12	85.4	113.1
21-Mar-12 16:46:00	5.13	86.8	115.0
21-Mar-12 16:47:00	5.09	89.2	117.9
21-Mar-12 16:48:00	5.11	91.3	120.9
21-Mar-12 16:49:00	5.12	93.7	124.1
Run 10 Average:	**5.21**	**81.6**	**108.6**

Date/Time	O_2 (%)	SO_2 (ppm)	SO_2 (ppm, corrected)
21-Mar-12 17:09:00	5.39	94.1	126.7
21-Mar-12 17:10:00	5.40	94.2	127.0
21-Mar-12 17:11:00	5.41	91.6	123.6
21-Mar-12 17:12:00	5.42	89.0	120.1
21-Mar-12 17:13:00	5.43	86.8	117.0
21-Mar-12 17:14:00	5.42	79.2	106.9
21-Mar-12 17:15:00	5.38	74.1	99.9
21-Mar-12 17:16:00	5.36	72.3	97.2
21-Mar-12 17:17:00	5.35	71.5	96.1
21-Mar-12 17:18:00	5.30	71.9	96.3
21-Mar-12 17:19:00	5.26	72.5	96.8
21-Mar-12 17:20:00	5.24	73.2	97.9
21-Mar-12 17:21:00	5.22	73.2	97.6
21-Mar-12 17:22:00	5.18	73.5	97.7
21-Mar-12 17:23:00	5.22	73.8	98.1
21-Mar-12 17:24:00	5.22	73.6	98.1
21-Mar-12 17:25:00	5.18	73.7	98.0
21-Mar-12 17:26:00	5.14	74.2	98.4
21-Mar-12 17:27:00	5.14	74.2	98.4
21-Mar-12 17:28:00	5.13	74.9	99.2
21-Mar-12 17:29:00	5.17	75.5	100.3
Run 11 Average:	**5.28**	**77.3**	**104.3**

Date/Time	O_2 (%)	SO_2 (ppm)	SO_2 (ppm, corrected)
21-Mar-12 17:51:00	5.35	77.1	103.7
21-Mar-12 17:52:00	5.36	76.2	102.5
21-Mar-12 17:53:00	5.37	75.4	101.4
21-Mar-12 17:54:00	5.40	74.3	100.1
21-Mar-12 17:55:00	5.40	74.0	99.7
21-Mar-12 17:56:00	5.38	74.1	99.8
21-Mar-12 17:57:00	5.40	74.7	100.7
21-Mar-12 17:58:00	5.35	75.5	101.5
21-Mar-12 17:59:00	5.35	76.7	103.0
21-Mar-12 18:00:00	5.35	78.1	105.0
21-Mar-12 18:01:00	5.38	78.2	105.2
21-Mar-12 18:02:00	5.35	78.3	105.3
21-Mar-12 18:03:00	5.34	78.8	105.8
21-Mar-12 18:04:00	5.32	78.3	105.0
21-Mar-12 18:05:00	5.34	77.6	104.3
21-Mar-12 18:06:00	5.31	77.8	104.3
21-Mar-12 18:07:00	5.32	78.3	105.1
21-Mar-12 18:08:00	5.29	78.0	104.4
21-Mar-12 18:09:00	5.29	77.9	104.3
21-Mar-12 18:10:00	5.33	82.2	110.3
21-Mar-12 18:11:00	5.31	86.0	115.3
Run 12 Average:	**5.35**	**77.5**	**104.1**

Valero Refining-Texas, L.P.
Houston Refinery
Houston, TX

CEMS DATA

SRU C Incinerator

Date	Time	O_2	SO_2	SO_2 @ 0%O_2
		%	ppm	ppm
3/21/2012	8:56	5.37	78.4	105.6
3/21/2012	8:57	5.34	78.9	106.0
3/21/2012	8:58	5.32	79.2	106.2
3/21/2012	8:59	5.28	80.3	107.4
3/21/2012	9:00	5.22	81.8	109.0
3/21/2012	9:01	5.19	83.1	110.5
3/21/2012	9:02	5.14	84.1	111.5
3/21/2012	9:03	5.10	85.0	112.4
3/21/2012	9:04	5.06	85.8	113.3
3/21/2012	9:05	5.04	85.6	112.8
3/21/2012	9:06	4.98	84.5	111.0
3/21/2012	9:07	4.94	84.2	110.3
3/21/2012	9:08	4.92	83.6	109.3
3/21/2012	9:09	4.93	82.9	108.5
3/21/2012	9:10	4.94	81.8	107.1
3/21/2012	9:11	4.96	80.8	105.9
3/21/2012	9:12	4.98	79.8	104.8
3/21/2012	9:13	4.99	78.1	102.6
3/21/2012	9:14	4.99	77.2	101.4
3/21/2012	9:15	5.00	77.3	101.6
3/21/2012	9:16	5.02	77.6	102.4
3/21/2012	9:17	5.03	79.4	104.6
3/21/2012	9:18	5.03	81.4	107.1
3/21/2012	9:19	5.05	81.9	108.0
3/21/2012	9:20	5.04	82.1	108.2
3/21/2012	9:21	5.05	82.9	109.4
3/21/2012	9:22	5.08	83.4	110.1
3/21/2012	9:23	5.12	83.2	110.1
3/21/2012	9:24	5.16	82.4	109.4
3/21/2012	9:25	5.17	81.5	108.2
3/21/2012	9:26	5.18	81.5	108.3
3/21/2012	9:27	5.15	83.1	110.2
3/21/2012	9:28	5.15	85.7	113.7
3/21/2012	9:29	5.18	87.3	116.0
3/21/2012	9:30	5.15	88.2	117.0
3/21/2012	9:31	5.07	89.5	118.2
3/21/2012	9:32	5.07	89.4	118.0
3/21/2012	9:33	5.10	88.4	116.9
3/21/2012	9:34	5.06	88.9	117.3
3/21/2012	9:35	5.05	89.8	118.4
3/21/2012	9:36	5.02	89.4	117.6
3/21/2012	9:37	5.03	88.8	116.9
3/21/2012	9:38	5.03	88.9	117.0
3/21/2012	9:39	5.04	88.5	116.6
3/21/2012	9:40	5.03	88.5	116.6
3/21/2012	9:41	5.07	87.3	115.2
3/21/2012	9:42	5.08	86.5	114.3
3/21/2012	9:43	5.10	86.8	114.8
3/21/2012	9:44	5.14	86.7	114.9
3/21/2012	9:45	5.20	85.3	113.5
3/21/2012	9:46	5.23	83.7	111.7
3/21/2012	9:47	5.32	81.3	109.1
3/21/2012	9:48	5.39	79.4	107.0
3/21/2012	9:49	5.40	78.2	105.5
3/21/2012	9:50	5.40	78.8	106.3
3/21/2012	9:51	5.47	78.9	106.9

Valero Refining-Texas, L.P.
Houston Refinery
Houston, TX

CEMS DATA

SRU C Incinerator

Date	Time	O_2	SO_2	SO_2 @ 0%O_2
		%	ppm	ppm
3/21/2012	9:52	5.52	77.4	105.1
3/21/2012	9:53	5.54	76.3	103.9
3/21/2012	9:54	5.56	75.2	102.4
3/21/2012	9:55	5.57	74.1	101.1
3/21/2012	9:56	5.53	73.5	100.0
3/21/2012	9:57	5.50	73.8	100.1
3/21/2012	9:58	5.44	74.8	101.0
3/21/2012	9:59	5.37	77.3	104.0
3/21/2012	10:00	5.34	80.1	107.6
3/21/2012	10:01	5.36	81.2	109.2
3/21/2012	10:02	5.32	82.3	110.4
3/21/2012	10:03	5.29	82.6	110.6
3/21/2012	10:04	5.30	81.6	109.4
3/21/2012	10:05	5.30	80.3	107.6
3/21/2012	10:06	5.30	79.2	106.1
3/21/2012	10:07	5.33	78.2	105.0
3/21/2012	10:08	5.34	77.1	103.6
3/21/2012	10:09	5.34	76.0	102.0
3/21/2012	10:10	5.40	75.7	102.0
3/21/2012	10:11	5.40	75.8	102.2
3/21/2012	10:12	5.38	75.9	102.2
3/21/2012	10:13	5.41	75.5	101.8
3/21/2012	10:14	5.45	74.7	101.0
3/21/2012	10:15	5.43	74.8	101.1
3/21/2012	10:16	5.41	75.1	101.3
3/21/2012	10:17	5.39	74.6	100.5
3/21/2012	10:18	5.39	74.8	100.8
3/21/2012	10:19	5.38	75.0	100.9
3/21/2012	10:20	5.35	75.3	101.2
3/21/2012	10:21	5.35	75.4	101.4
3/21/2012	10:22	5.34	75.4	101.3
3/21/2012	10:23	5.35	75.1	100.9
3/21/2012	10:24	5.36	74.8	100.6
3/21/2012	10:25	5.33	75.1	100.8
3/21/2012	10:26	5.36	75.2	101.1
3/21/2012	10:27	5.40	74.7	100.7
3/21/2012	10:28	5.39	74.2	100.0
3/21/2012	10:29	5.38	74.5	100.2
3/21/2012	10:30	5.40	74.6	100.6
3/21/2012	10:31	5.43	74.3	100.3
3/21/2012	10:32	5.38	74.3	100.1
3/21/2012	10:33	5.38	74.2	99.9
3/21/2012	10:34	5.40	73.9	99.7
3/21/2012	10:35	5.38	73.6	99.1
3/21/2012	10:36	5.33	73.8	99.0
3/21/2012	10:37	5.37	72.9	98.0
3/21/2012	10:38	5.37	73.1	98.4
3/21/2012	10:39	5.37	73.5	98.9
3/21/2012	10:40	5.36	73.3	98.5
3/21/2012	10:41	5.38	73.0	98.3
3/21/2012	10:42	5.40	72.6	97.8
3/21/2012	10:43	5.40	72.1	97.2
3/21/2012	10:44	5.40	72.3	97.4
3/21/2012	10:45	5.41	72.2	97.4
3/21/2012	10:46	5.43	71.3	96.3
3/21/2012	10:47	5.40	71.3	96.1

Valero Refining-Texas, L.P.
Houston Refinery
Houston, TX

CEMS DATA

SRU C Incinerator

Date	Time	O_2	SO_2	SO_2 @ 0%O_2
		%	ppm	ppm
3/21/2012	10:48	5.38	72.0	97.0
3/21/2012	10:49	5.41	72.6	97.9
3/21/2012	10:50	5.39	72.6	97.8
3/21/2012	10:51	5.37	72.9	98.1
3/21/2012	10:52	5.40	72.6	97.9
3/21/2012	10:53	5.37	73.0	98.2
3/21/2012	10:54	5.34	73.3	98.4
3/21/2012	10:55	5.37	73.1	98.4
3/21/2012	10:56	5.36	73.4	98.7
3/21/2012	10:57	5.36	73.4	98.7
3/21/2012	10:58	5.38	73.5	98.9
3/21/2012	10:59	5.35	73.8	99.2
3/21/2012	11:00	5.38	74.1	99.9
3/21/2012	11:01	5.40	74.0	99.8
3/21/2012	11:02	5.40	73.9	99.6
3/21/2012	11:03	5.39	73.9	99.6
3/21/2012	11:04	5.35	74.5	100.1
3/21/2012	11:05	5.34	74.3	99.8
3/21/2012	11:06	5.36	73.4	98.7
3/21/2012	11:07	5.38	73.4	98.8
3/21/2012	11:08	5.42	73.2	98.8
3/21/2012	11:09	5.41	73.1	98.6
3/21/2012	11:10	5.41	72.8	98.3
3/21/2012	11:11	5.39	72.9	98.2
3/21/2012	11:12	5.38	72.5	97.7
3/21/2012	11:13	5.42	72.7	98.2
3/21/2012	11:14	5.38	73.2	98.6
3/21/2012	11:15	5.42	73.0	98.6
3/21/2012	11:16	5.39	73.1	98.5
3/21/2012	11:17	5.37	73.5	98.9
3/21/2012	11:18	5.41	73.9	99.6
3/21/2012	11:19	5.43	73.8	99.7
3/21/2012	11:20	5.41	73.6	99.3
3/21/2012	11:21	5.40	74.6	100.5
3/21/2012	11:22	5.39	75.5	101.7
3/21/2012	11:23	5.38	75.2	101.3
3/21/2012	11:24	5.41	75.3	101.6
3/21/2012	11:25	5.40	75.4	101.7
3/21/2012	11:26	5.39	75.9	102.2
3/21/2012	11:27	5.36	76.2	102.4
3/21/2012	11:28	5.38	75.9	102.2
3/21/2012	11:29	5.40	75.5	101.8
3/21/2012	11:30	5.41	74.8	100.9
3/21/2012	11:31	5.42	74.8	100.9
3/21/2012	11:32	5.40	74.5	100.4
3/21/2012	11:33	5.42	74.3	100.4
3/21/2012	11:34	5.43	74.0	100.0
3/21/2012	11:35	5.40	73.7	99.4
3/21/2012	11:36	5.40	73.3	98.9
3/21/2012	11:37	5.36	73.4	98.8
3/21/2012	11:38	5.34	74.0	99.4
3/21/2012	11:39	5.33	75.5	101.3
3/21/2012	11:40	5.29	77.4	103.6
3/21/2012	11:41	5.26	78.2	104.4
3/21/2012	11:42	5.20	78.8	104.9
3/21/2012	11:43	5.18	78.8	104.8

Valero Refining-Texas, L.P.
Houston Refinery
Houston, TX

CEMS DATA

SRU C Incinerator

Date	Time	O_2	SO_2	SO_2 @ 0%O_2
		%	ppm	ppm
3/21/2012	11:44	5.15	79.4	105.3
3/21/2012	11:45	5.13	79.8	105.7
3/21/2012	11:46	5.15	80.0	106.2
3/21/2012	11:47	5.09	80.4	106.2
3/21/2012	11:48	5.06	81.2	107.1
3/21/2012	11:49	5.12	82.4	109.1
3/21/2012	11:50	5.11	83.9	111.1
3/21/2012	11:51	5.08	85.7	113.1
3/21/2012	11:52	5.08	85.2	112.6
3/21/2012	11:53	5.04	85.6	112.7
3/21/2012	11:54	5.09	87.0	115.0
3/21/2012	11:55	5.11	89.5	118.5
3/21/2012	11:56	5.13	90.8	120.3
3/21/2012	11:57	5.13	91.1	120.6
3/21/2012	11:58	5.15	90.5	120.1
3/21/2012	11:59	5.19	89.2	118.7
3/21/2012	12:00	5.20	87.9	117.0
3/21/2012	12:01	5.19	86.9	115.6
3/21/2012	12:02	5.20	85.3	113.6
3/21/2012	12:03	5.19	82.9	110.3
3/21/2012	12:04	5.25	80.6	107.6
3/21/2012	12:05	5.31	79.1	106.1
3/21/2012	12:06	5.29	78.1	104.5
3/21/2012	12:07	5.28	77.1	103.2
3/21/2012	12:08	5.27	77.1	103.1
3/21/2012	12:09	5.27	78.1	104.4
3/21/2012	12:10	5.28	80.0	107.0
3/21/2012	12:11	5.36	80.9	108.8
3/21/2012	12:12	5.33	81.5	109.4
3/21/2012	12:13	5.29	83.7	112.1
3/21/2012	12:14	5.26	86.6	115.6
3/21/2012	12:15	5.24	88.6	118.2
3/21/2012	12:16	5.18	89.7	119.2
3/21/2012	12:17	5.19	88.6	117.9
3/21/2012	12:18	5.19	87.6	116.6
3/21/2012	12:19	5.09	87.4	115.6
3/21/2012	12:20	5.00	88.0	115.7
3/21/2012	12:21	4.97	88.5	116.1
3/21/2012	12:22	5.00	86.2	113.3
3/21/2012	12:23	5.00	82.9	109.0
3/21/2012	12:24	4.98	81.0	106.4
3/21/2012	12:25	5.02	80.3	105.7
3/21/2012	12:26	5.07	79.3	104.7
3/21/2012	12:27	5.13	79.0	104.7
3/21/2012	12:28	5.15	78.8	104.5
3/21/2012	12:29	5.20	78.3	104.3
3/21/2012	12:30	5.25	77.6	103.6
3/21/2012	12:31	5.29	76.4	102.3
3/21/2012	12:32	5.29	76.6	102.6
3/21/2012	12:33	5.28	77.6	103.9
3/21/2012	12:34	5.26	79.1	105.7
3/21/2012	12:35	5.28	79.9	106.9
3/21/2012	12:36	5.29	80.7	108.1
3/21/2012	12:37	5.22	82.8	110.4
3/21/2012	12:38	5.17	86.3	114.7
3/21/2012	12:39	5.19	86.9	115.6

Valero Refining-Texas, L.P.
Houston Refinery
Houston, TX

CEMS DATA

SRU C Incinerator

Date	Time	O_2	SO_2	SO_2 @ 0%O_2
		%	ppm	ppm
3/21/2012	12:40	5.19	86.4	115.0
3/21/2012	12:41	5.16	86.8	115.3
3/21/2012	12:42	5.16	86.6	115.0
3/21/2012	12:43	5.16	85.9	114.0
3/21/2012	12:44	5.16	85.4	113.4
3/21/2012	12:45	5.17	84.3	112.0
3/21/2012	12:46	5.21	82.4	109.7
3/21/2012	12:47	5.23	81.9	109.2
3/21/2012	12:48	5.27	81.5	109.0
3/21/2012	12:49	5.28	80.6	107.9
3/21/2012	12:50	5.31	80.2	107.5
3/21/2012	12:51	5.40	79.1	106.6
3/21/2012	12:52	5.46	78.9	106.9
3/21/2012	12:53	5.50	79.2	107.4
3/21/2012	12:54	5.54	80.8	110.0
3/21/2012	12:55	5.60	83.0	113.4
3/21/2012	12:56	5.57	84.5	115.2
3/21/2012	12:57	5.53	86.5	117.6
3/21/2012	12:58	5.52	88.7	120.6
3/21/2012	12:59	5.53	91.4	124.3
3/21/2012	13:00	5.50	94.3	128.0
3/21/2012	13:01	5.43	96.7	130.6
3/21/2012	13:02	5.37	98.7	132.8
3/21/2012	13:03	5.36	100.2	134.7
3/21/2012	13:04	5.36	100.9	135.7
3/21/2012	13:05	5.28	102.4	136.9
3/21/2012	13:06	5.21	104.0	138.5
3/21/2012	13:07	5.12	106.1	140.5
3/21/2012	13:08	5.08	106.5	140.7
3/21/2012	13:09	5.02	105.2	138.5
3/21/2012	13:10	4.95	102.9	134.8
3/21/2012	13:11	4.90	100.4	131.1
3/21/2012	13:12	4.91	98.8	129.2
3/21/2012	13:13	4.91	96.0	125.5
3/21/2012	13:14	4.97	92.5	121.4
3/21/2012	13:15	4.98	90.8	119.2
3/21/2012	13:16	4.98	90.6	118.9
3/21/2012	13:17	4.95	91.7	120.2
3/21/2012	13:18	4.93	91.7	120.0
3/21/2012	13:19	4.97	92.0	120.7
3/21/2012	13:20	5.01	92.8	122.0
3/21/2012	13:21	5.03	94.2	124.1
3/21/2012	13:22	5.07	95.1	125.5
3/21/2012	13:23	5.13	94.8	125.6
3/21/2012	13:24	5.19	93.5	124.4
3/21/2012	13:25	5.26	91.2	121.8
3/21/2012	13:26	5.31	88.4	118.5
3/21/2012	13:27	5.35	86.5	116.2
3/21/2012	13:28	5.39	84.8	114.3
3/21/2012	13:29	5.41	82.6	111.4
3/21/2012	13:30	5.40	81.1	109.3
3/21/2012	13:31	5.39	81.2	109.4
3/21/2012	13:32	5.36	82.8	111.3
3/21/2012	13:33	5.32	85.3	114.4
3/21/2012	13:34	5.31	87.6	117.4
3/21/2012	13:35	5.26	90.5	121.0

Valero Refining-Texas, L.P.
Houston Refinery
Houston, TX

CEMS DATA

SRU C Incinerator

Date	Time	O_2	SO_2	SO_2 @ 0%O_2
		%	ppm	ppm
3/21/2012	13:36	5.22	94.0	125.3
3/21/2012	13:37	5.22	96.5	128.7
3/21/2012	13:38	5.14	100.0	132.6
3/21/2012	13:39	5.07	102.9	135.8
3/21/2012	13:40	4.98	104.0	136.6
3/21/2012	13:41	4.95	102.4	134.2
3/21/2012	13:42	4.90	102.3	133.6
3/21/2012	13:43	4.88	101.3	132.1
3/21/2012	13:44	4.88	97.7	127.5
3/21/2012	13:45	4.81	95.6	124.2
3/21/2012	13:46	4.79	94.1	122.1
3/21/2012	13:47	4.85	92.5	120.4
3/21/2012	13:48	4.88	91.0	118.7
3/21/2012	13:49	4.87	91.0	118.7
3/21/2012	13:50	4.94	90.7	118.7
3/21/2012	13:51	5.07	89.3	117.9
3/21/2012	13:52	5.06	88.7	117.0
3/21/2012	13:53	5.04	89.6	118.1
3/21/2012	13:54	5.09	89.5	118.2
3/21/2012	13:55	5.14	88.0	116.7
3/21/2012	13:56	5.19	87.0	115.7
3/21/2012	13:57	5.25	85.7	114.5
3/21/2012	13:58	5.27	85.2	113.9
3/21/2012	13:59	5.24	85.4	114.0
3/21/2012	14:00	5.20	85.7	114.1
3/21/2012	14:01	5.21	85.2	113.4
3/21/2012	14:02	5.24	85.2	113.7
3/21/2012	14:03	5.26	85.2	113.8
3/21/2012	14:04	5.27	85.0	113.6
3/21/2012	14:05	5.24	85.2	113.7
3/21/2012	14:06	5.25	85.6	114.4
3/21/2012	14:07	5.20	87.1	115.9
3/21/2012	14:08	5.19	88.6	117.9
3/21/2012	14:09	5.16	90.1	119.7
3/21/2012	14:10	5.13	91.4	121.1
3/21/2012	14:11	5.09	91.9	121.4
3/21/2012	14:12	5.14	92.2	122.3
3/21/2012	14:13	5.12	92.4	122.4
3/21/2012	14:14	5.13	91.9	121.8
3/21/2012	14:15	5.14	90.7	120.3
3/21/2012	14:16	5.21	88.9	118.4
3/21/2012	14:17	5.25	86.6	115.6
3/21/2012	14:18	5.20	87.0	115.8
3/21/2012	14:19	5.14	88.8	117.8
3/21/2012	14:20	5.15	89.5	118.8
3/21/2012	14:21	5.23	88.7	118.3
3/21/2012	14:22	5.17	88.5	117.6
3/21/2012	14:23	5.14	88.8	117.8
3/21/2012	14:24	5.20	89.2	118.7
3/21/2012	14:25	5.15	90.6	120.1
3/21/2012	14:26	5.11	92.0	121.8
3/21/2012	14:27	5.15	92.1	122.3
3/21/2012	14:28	5.18	90.5	120.3
3/21/2012	14:29	5.24	88.9	118.7
3/21/2012	14:30	5.26	88.6	118.4
3/21/2012	14:31	5.21	89.6	119.3

Valero Refining-Texas, L.P.
Houston Refinery
Houston, TX

CEMS DATA

SRU C Incinerator

Date	Time	O_2	SO_2	SO_2 @ 0%O_2
		%	ppm	ppm
3/21/2012	14:32	5.21	90.4	120.4
3/21/2012	14:33	5.25	91.3	121.9
3/21/2012	14:34	5.25	91.9	122.7
3/21/2012	14:35	5.23	92.3	123.0
3/21/2012	14:36	5.22	92.8	123.7
3/21/2012	14:37	5.23	93.9	125.2
3/21/2012	14:38	5.20	95.0	126.5
3/21/2012	14:39	5.19	96.2	127.9
3/21/2012	14:40	5.20	96.2	128.1
3/21/2012	14:41	5.25	96.8	129.3
3/21/2012	14:42	5.31	98.7	132.4
3/21/2012	14:43	5.29	100.5	134.6
3/21/2012	14:44	5.28	102.2	136.7
3/21/2012	14:45	5.37	102.2	137.6
3/21/2012	14:46	5.38	100.6	135.4
3/21/2012	14:47	5.38	99.3	133.8
3/21/2012	14:48	5.34	100.9	135.5
3/21/2012	14:49	5.30	103.6	138.8
3/21/2012	14:50	5.29	108.0	144.6
3/21/2012	14:51	5.27	111.5	149.1
3/21/2012	14:52	5.21	112.9	150.4
3/21/2012	14:53	5.19	111.9	148.9
3/21/2012	14:54	5.22	109.4	145.8
3/21/2012	14:55	5.17	107.3	142.6
3/21/2012	14:56	5.15	105.7	140.2
3/21/2012	14:57	5.18	101.9	135.4
3/21/2012	14:58	5.19	98.4	130.9
3/21/2012	14:59	5.16	98.8	131.2
3/21/2012	15:00	5.22	99.7	132.9
3/21/2012	15:01	5.32	98.5	132.1
3/21/2012	15:02	5.41	97.2	131.2
3/21/2012	15:03	5.47	95.9	129.9
3/21/2012	15:04	5.49	95.9	130.0
3/21/2012	15:05	5.48	97.5	132.2
3/21/2012	15:06	5.44	100.0	135.3
3/21/2012	15:07	5.43	104.2	140.8
3/21/2012	15:08	5.35	107.9	145.0
3/21/2012	15:09	5.24	111.0	148.2
3/21/2012	15:10	5.17	112.3	149.1
3/21/2012	15:11	5.07	112.3	148.3
3/21/2012	15:12	4.98	112.4	147.6
3/21/2012	15:13	4.85	113.4	147.7
3/21/2012	15:14	4.79	107.8	139.9
3/21/2012	15:15	4.85	102.8	133.9
3/21/2012	15:16	4.93	110.9	145.2
3/21/2012	15:17	5.01	122.6	161.2
3/21/2012	15:18	5.02	126.0	165.8
3/21/2012	15:19	4.96	120.9	158.5
3/21/2012	15:20	4.94	110.7	145.0
3/21/2012	15:21	4.93	103.3	135.2
3/21/2012	15:22	4.95	98.4	128.9
3/21/2012	15:23	5.00	95.5	125.5
3/21/2012	15:24	5.07	94.0	124.1
3/21/2012	15:25	5.16	91.8	121.9
3/21/2012	15:26	5.27	89.7	120.0
3/21/2012	15:27	5.34	88.1	118.3

Valero Refining-Texas, L.P.
Houston Refinery
Houston, TX

CEMS DATA

SRU C Incinerator

Date	Time	O_2	SO_2	SO_2 @ 0%O_2
		%	ppm	ppm
3/21/2012	17:20	5.24	73.3	97.9
3/21/2012	17:21	5.22	73.2	97.6
3/21/2012	17:22	5.18	73.5	97.7
3/21/2012	17:23	5.22	73.6	98.1
3/21/2012	17:24	5.22	73.6	98.1
3/21/2012	17:25	5.18	73.7	98.0
3/21/2012	17:26	5.14	74.2	98.4
3/21/2012	17:27	5.14	74.2	98.4
3/21/2012	17:28	5.13	74.9	99.2
3/21/2012	17:29	5.17	75.5	100.3
3/21/2012	17:30	5.12	76.9	101.8
3/21/2012	17:31	5.11	78.5	103.9
3/21/2012	17:32	5.12	80.1	106.1
3/21/2012	17:33	5.17	81.4	108.2
3/21/2012	17:34	5.18	82.5	109.7
3/21/2012	17:35	5.15	84.1	111.6
3/21/2012	17:36	5.14	85.2	113.0
3/21/2012	17:37	5.17	85.6	113.7
3/21/2012	17:38	5.19	86.6	115.2
3/21/2012	17:39	5.18	88.4	117.5
3/21/2012	17:40	5.18	88.9	118.2
3/21/2012	17:41	5.19	88.2	117.3
3/21/2012	17:42	5.20	87.4	116.3
3/21/2012	17:43	5.19	86.2	114.6
3/21/2012	17:44	5.18	84.5	112.4
3/21/2012	17:45	5.20	83.0	110.4
3/21/2012	17:46	5.22	82.0	109.3
3/21/2012	17:47	5.22	80.9	107.8
3/21/2012	17:48	5.23	80.2	106.9
3/21/2012	17:49	5.27	79.2	105.9
3/21/2012	17:50	5.31	78.2	104.8
3/21/2012	17:51	5.35	77.1	103.7
3/21/2012	17:52	5.36	76.2	102.5
3/21/2012	17:53	5.37	75.4	101.4
3/21/2012	17:54	5.40	74.3	100.1
3/21/2012	17:55	5.40	74.0	99.7
3/21/2012	17:56	5.38	74.1	99.8
3/21/2012	17:57	5.40	74.7	100.7
3/21/2012	17:58	5.35	75.5	101.5
3/21/2012	17:59	5.35	76.7	103.0
3/21/2012	18:00	5.35	78.1	105.0
3/21/2012	18:01	5.38	78.2	105.2
3/21/2012	18:02	5.35	78.3	105.3
3/21/2012	18:03	5.34	78.8	105.8
3/21/2012	18:04	5.32	78.3	105.0
3/21/2012	18:05	5.34	77.6	104.3
3/21/2012	18:06	5.31	77.8	104.3
3/21/2012	18:07	5.32	78.3	105.1
3/21/2012	18:08	5.29	78.0	104.4
3/21/2012	18:09	5.29	77.9	104.3
3/21/2012	18:10	5.33	82.2	110.3
3/21/2012	18:11	5.31	86.0	115.3
3/21/2012	18:12	5.33	87.5	117.4
3/21/2012	18:13	5.32	88.3	118.5
3/21/2012	18:14	5.29	89.4	119.7
3/21/2012	18:15	5.32	90.5	121.4

Valero Refining-Texas, L.P.
Houston Refinery
Houston, TX

CEMS DATA

SRU C Incinerator

Date	Time	O_2	SO_2	SO_2 @ 0%O_2
		%	ppm	ppm
3/21/2012	18:16	5.35	91.3	122.7
3/21/2012	18:17	5.34	92.2	123.8
3/21/2012	18:18	5.37	92.6	124.6
3/21/2012	18:19	5.36	93.1	125.2
3/21/2012	18:20	5.37	92.9	125.1
3/21/2012	18:21	5.39	92.6	124.8
3/21/2012	18:22	5.38	89.6	120.7
3/21/2012	18:23	5.38	83.4	112.3
3/21/2012	18:24	5.39	79.4	107.1
3/21/2012	18:25	5.39	78.0	105.2
3/21/2012	18:26	5.39	77.6	104.5
3/21/2012	18:27	5.42	77.3	104.4
3/21/2012	18:28	5.44	76.8	103.9
3/21/2012	18:29	5.44	76.7	103.7
3/21/2012	18:30	5.46	76.8	103.9
3/21/2012	18:31	5.46	76.7	103.8
3/21/2012	18:32	5.41	76.4	103.1
3/21/2012	18:33	5.44	76.8	103.8
3/21/2012	18:34	5.45	76.6	103.6
3/21/2012	18:35	5.39	76.9	103.7
3/21/2012	18:36	5.39	77.3	104.2
3/21/2012	18:37	5.39	77.5	104.5
3/21/2012	18:38	5.38	77.6	104.5
3/21/2012	18:39	5.39	78.1	105.2
3/21/2012	18:40	5.35	78.5	105.5
3/21/2012	18:41	5.35	78.8	105.9
3/21/2012	18:42	5.39	78.4	105.7
3/21/2012	18:43	5.39	77.7	104.8
3/21/2012	18:44	5.39	77.5	104.4
3/21/2012	18:45	5.42	77.1	104.1

GOLDEN SPECIALTY

The *GOLD STANDARD* for Air Testing

Air Quality Test Report

Annual Relative Accuracy Test Audit for O_2 and SO_2 CEMS

Valero Refining-Texas, L.P.
Houston, Texas

Sulfur Recovery Unit (SRU) B Incinerator – Unit 46

NSR Permit for SRUs 2507A; Operating Permit No.: O1381; EPN: 46CB6301

Report Number: 12VALH170
Date Tested: March 22, 2012
Date Prepared: April 6, 2012

PREPARED FOR
Valero Refining – Texas, L.P.
Houston Refinery
9701 Manchester Road
Houston, Texas 77012

Phone 713.924.1524

Prepared by:
GOLDEN SPECIALTY, INC.
888.472.9898
goldenspecialty.com

Air Quality Test Report

Annual Relative Accuracy Test Audit for O_2 and SO_2 CEMS

Valero Refining-Texas, L.P.
Houston, Texas

Sulfur Recovery Unit (SRU) B Incinerator – Unit 46

This report is supported by GOLDEN's Quality Assurance Manual and ASTM D7036 Interim Accreditation as an Air Emission Testing Body. The information included in the report is authentic and accurate to the best of our knowledge.

Certified by:

Scott B. Swiggard, Ph.D., QSTI 2006-025
Technical Director

Daniel A. Loubiere, QSTI 2008-128
Project Manager / Onsite QSTI

TABLE OF CONTENTS

EXECUTIVE SUMMARY 1
TABLE 1-1. SRU B INCINERATOR CEMS ANALYZERS 1
TABLE 1-2. CEMS RATA RESULTS VS. ALLOWABLE. 1
INTRODUCTION 2
PURPOSE OF TEST 2
RELATIVE ACCURACY TEST AUDIT (RATA) 2
PROBLEMS, DEVIATIONS AND/OR EXCEPTIONS 2
PERFORMANCE TEST PROCEDURES 3
INSTRUMENTAL ANALYZER PROCEDURE 3
SAMPLING SYSTEM 3
ANALYZER CALIBRATION 3
ANALYZER CALIBRATION ERROR 4
SYSTEM BIAS CHECK 4
ANALYZER DRIFT 4
RESPONSE TIME 5
USEPA REFERENCE METHODS 5
USEPA METHOD 3A: OXYGEN AND CARBON DIOXIDE ANALYSIS (INSTRUMENTAL PROCEDURE) 5
USEPA METHOD 6C: SULFUR DIOXIDE ANALYSIS (INSTRUMENTAL PROCEDURE) 5
FIGURE 1-1. SAMPLING SYSTEM SCHEMATIC 6
USEPA METHOD 205: GAS DILUTION VERIFICATION 7
SOURCE INFORMATION 8
FIGURE 1-2. DIAGRAM OF TESTING LOCATION 8
SAMPLE CALCULATIONS 9
TABLE 1-3. SRU B INCINERATOR RM AND CEMS DATA FOR SO_2 IN PPMVD @ 0% O_2 9
RELATIVE ACCURACY CALCULATIONS 9
DETERMINATION OF AVERAGE DIFFERENCE (D_{AVG}) 9
DETERMINATION OF STANDARD DEVIATION (S_D) 9
DETERMINATION OF CONFIDENCE COEFFICIENT 10
DETERMINATION OF RELATIVE ACCURACY 10
DETERMINATION OF ALTERNATE RELATIVE ACCURACY FOR SO_2 10
DETERMINATION OF RELATIVE ACCURACY FOR O_2 10
CALIBRATION CORRECTION 11
CONCENTRATION (CORRECTED TO 0% O_2) 11
TEST RESULTS 12
TABLE 1-2. CEMS RATA RESULTS VS. ALLOWABLE. 12
TABLE 1-4. SRU B INCINERATOR CEMS RATA RESULTS 13
APPENDIX A – TESTING EQUIPMENT ..... A
TABLE 1-5. TESTING EQUIPMENT USED ..... A
APPENDIX B – RESUMES ..... B
APPENDIX C – CALIBRATION DATA C
APPENDIX D – FIELD DATA ..... D
APPENDIX E – REFERENCE METHOD DATA ..... E
APPENDIX F – CEMS DATA ..... F

EXECUTIVE SUMMARY

On March 22, 2012, Golden Specialty, Inc. (GOLDEN) was contracted by Valero Refining-Texas, L.P., to perform air testing at their facility located in Houston, Texas. GOLDEN was contracted to perform an annual relative accuracy test audit (RATA) on a continuous emissions monitoring system (CEMS) located on the Sulfur Recovery Unit (SRU) B Incinerator exhaust stack. The measured parameters were oxygen (O_2) and sulfur dioxide (SO_2). The test was conducted in accordance with all appropriate United States Environmental Protection Agency (USEPA) Methodologies; as well as all applicable Texas Commission on Environmental Quality (TCEQ) mandates.

The purpose of the tests performed was to provide RATA results for demonstrating compliance of the CEMS with the applicable regulations, 40 CFR 60, Appendix B, Performance Specifications 2 and 3 O_2 and SO_2 CEMS. See Table 1-1 below for specifics on CEMS numbers and ranges for each CEMS component.

Component	*Make/Model*	*Serial Number*	*Range*
O_2	AMETEK / 2000	10209509	0-25 %
SO_2	Western Research / 921CE	AX-921-9764-1	0-500 ppm

Table 1-1. SRU B Incinerator CEMS Analyzers

The relative accuracy (RA) for each compound was based on data calculated on nine (9) twenty-one minute runs. A total of ten (10) runs were performed, with the results of the run with the highest deviation being discarded. All RA runs are presented in this report. The calculated RA results presented below. The RA for SO_2 was calculated using concentrations in terms of part per million by volume, dry basis (ppmvd) corrected to 0% O_2. The RA results for O_2 are on a dry percent (%) basis. During the RATA test program, the SRU B Incinerator was operated at or near a production rate of 70 Long Tons per Day, which is 31.1% of its maximum rated capacity (225 Long Tons per Day).

RATA Calculations Nine - 21 minute average		
	SO_2 (ppmvd @ 0% O_2)	O_2 (%)
D-Bar=	2.999	0.176
Sigma-D=	1.862	0.045
CC=	1.431	0.034
RA (%RM)	3.18%	0.176
App. Std.	250.0	
RA(%ES)	1.77%	
RA Limit	10% App. Std.	1% O2
PASS RA?	**YES!**	**YES!**

Table 1-2. CEMS RATA Results vs. Allowable.

Based on the results shown in this report, the CEMS installed on the SRU B Incinerator is operating within the limits of the Code of Federal Regulations, 40 CFR 60 Appendix B as applicable.

INTRODUCTION

Purpose of Test

The purpose of the test conducted on the SRU B Incinerator was to verify that the CEMS, which was installed to continuously monitor emissions of O_2 and SO_2, were operating within the limitations set forth in the CFR and the Texas Administrative Code (30 TAC). The tolerances to be met for the RA portion of this test program are set forth in the Performance Specifications (PS) section of The Code of Federal Regulations, Title 40, Part 60 (40 CFR 60) Appendix B for O_2 and SO_2 CEMS. Mr. Dan Loubiere managed the project and performed the testing, with the assistance of Mr. Bryan Johnson, according to all applicable state and federal regulations.

Relative Accuracy Test Audit (RATA)

During the RATA performance tests, the exhaust gas stream was analyzed for the targeted pollutant and diluent gas concentrations. This sampling was conducted according to USEPA Reference Methods 3A and 6C for determination of O_2 and SO_2, respectively. These methods utilize instrument analysis to determine the gaseous concentrations for the required constituents within the stack. Method 205 was used for the verification of the gas dilution system used for this test program. The reference methods are discussed in greater detail in the Performance Test Procedures section of this report.

The RATA testing consisted of drawing a representative sample of the exhaust gas stream into a conditioning system for removal of moisture. The sample was then allowed to pass into a set of hardware reference method (RM) analyzers, where the concentrations of the targeted pollutant and diluent gas concentrations were measured. These instantaneous readings were compiled in a data acquisition system (DAS) data based on a one-minute-average basis for comparison to the CEMS data. Reference methods employed for each of the targeted gases are described in the Performance Test Procedures section of this report.

The CEMS provides a record of the pollutant and diluent gas concentration data from the subject flue gas stream. This data was subsequently compared to the RM data for determination of the relative accuracy (RA) of the CEMS. The RA calculations are discussed in greater detail in the Sample Calculations section of this report.

GOLDEN utilized a single sampling system for the performance of this Test Program. The sampling system (System One) was utilized for relative accuracy (RA) determinations of O_2 and SO_2. The RA for SO_2 was calculated using concentrations in terms of part per million by volume, dry basis (ppmvd) corrected to 0% O_2. The RA results for O_2 are on a dry percent (%) basis.

Problems, Deviations and/or Exceptions

The time clock for the SRU B Incinerator CEMS did not reflect the Daylight Savings time change, therefore the DAS clock was adjusted to coincide with the CEMS time.

The DAS logger date stamp was adjusted from 3/23/2012 to 3/22/2012 after the RATA was completed.

PERFORMANCE TEST PROCEDURES

Instrumental Analyzer Procedure

Stack gas emissions of O_2 and SO_2 from the source were measured with RM analyzers. These tests were performed in accordance with the applicable regulations, as outlined in Title 40, Part 60, Appendix A of the Code of Federal Regulations. All field data collected during the testing and photocopies of the actual O_2 and SO_2 one-minute averaging are provided in this report.

Sampling System

A gas sample was continuously extracted from the source with a stainless steel probe and channeled through a heated sample line to a gas sample conditioner. The entire sample extraction and delivery system was maintained at a temperature above 225°F to the point the sample enters the sample conditioner. The sample conditioner was employed to decrease the dewpoint of the combustion gases to a repeatable, stable, low dew point. Condensed moisture was continuously removed from the sample conditioner by peristaltic pump and drained. The conditioned gas then traveled through a network of ¼-inch Teflon® tubing to a manifold in the mobile laboratory. From the manifold, the sample was directed to a set of rotometers, where the flow of the sample gas into the analyzers was maintained at approximately 1 liter per minute (L/min).

Analyzer Calibration

The calibration of the instruments was performed using Protocol certified gas standards composed of a known concentration of the given component in zero-grade nitrogen. A copy of the certification standards for each of the certified calibration standards used during the testing is included in Appendix C. All of the values obtained during the calibration process, including analyzer calibration, system bias analysis, and drift values, can be found in Appendix C of this report. The analyzer calibration procedures are identical, regardless of the constituent being evaluated by each analyzer. The range used for each analyzer was determined based on the expected concentration levels of the flue gas stream.

The first step in the analyzer calibration was to set the zero point on the analyzer using zero-grade nitrogen. The nitrogen is introduced directly to the back of each analyzer, and the zero potentiometer on the analyzer is adjusted until the proper output from the analyzer is realized. Next, a high-range calibration gas is introduced to each analyzer, with a concentration within the appropriate range of the instrument. The span potentiometer on each analyzer is then adjusted until the output from the analyzer corresponds to the value of the calibration standard. Finally, a mid-range calibration standard with a concentration approximately one-half of the high-range calibration standard is used to determine the linearity of the analyzer within the given range. For certain constituents, more than one mid-range value is required. The specific requirements for each constituent are discussed later in this section.

Analyzer Calibration Error

The Analyzer Calibration Error (ACE) is the difference between the gas concentration exhibited by the gas analyzer and the concentration of the calibration gas when introduced directly to the analyzer. The maximum allowable variance for the zero, mid-range, and high-range calibration gases is ± 2% of the span. The calibration values and corresponding percent errors associated with this project can be found in Appendix C of this report, and is determined by the following equation.

$$ACE = \left(\frac{Analyzer\ Response - Cylinder\ Value}{Calibration\ Span} \right) x100$$

System Bias Check

Following the analyzer calibration procedure, a second test is required to determine the amount of bias the sampling system has on the calibration standard concentrations. In this procedure, the same calibration standards that were used to perform the analyzer calibration error test are introduced to the sampling system via a separate network of ¼-inch Teflon® tubing. The calibration gases are allowed to flood the system via a "t" connection at the end of the sample probe at a rate of approximately 2 L/min higher than the sample rate. The excess calibration gas flows out the tip of the probe, preventing stack gas from being drawn into the sampling system during calibrations. The gas is then drawn back through the system by the conditioning pumps, and is introduced to the analyzers. The output from the analyzers is recorded, without adjusting the zero or span potentiometers. The bias created by the sampling system is then determined by the following equation.

$$Bias = \left(\frac{System\ Response - Calibration\ Error\ Response}{Calibration\ Span} \right) x100$$

The maximum allowable system bias for any one analyzer is ±5% of the corresponding span value. The values determined for this portion of the calibration procedure can be found in Appendix C of this report.

Analyzer Drift

Utilizing the data obtained during the post-test bias check, a third test is performed to determine the amount of drift experienced during the test run. The analyzer response from the post-test system bias check is compared to the pre-test response for the same calibration standard for drift determinations. If the drift value is greater than the allowable value, the test run is considered invalid and the analyzers must be re-calibrated before continuing the test. The drift for each constituent is determined using the equation below.

$$Drift = \left(\frac{\left| Final\ System\ Calibration\ Response - Initial\ System\ Calibration\ Response \right|}{Calibration\ Span} \right) x100$$

The maximum allowable calibration drift for any one analyzer is 3% of the span over the period of each run. The values determined for this portion of the calibration procedure can be found in Appendix C of this report.

Response Time

System response times for each analyzer were determined during the initial pretest bias prior to run number 1. The response time is determined by the length of time it takes the analyzer response to be within 95% or 0.5 ppm (whichever is less restrictive) of the certified gas concentration. The start of each run was a minimum of twice the response time following the completion of calibration checks.

USEPA Reference Methods

This section provides a detailed description of the individual USEPA Reference Methods employed in this test (40 CFR 60, Appendix A). A schematic of the sampling system used to perform the test program on the SRU B Incinerator can be found in Figure 1-1. Specifics for each analyzer utilized in this test program are presented in Appendix A.

USEPA Method 3A: Oxygen and Carbon Dioxide Analysis (Instrumental Procedure)

This method was employed to determine the concentration of O_2 in the flue gas stream with the use of analytical instruments. A sample was continuously extracted from the stack and introduced to a RM analyzer for determination of concentration. The minimum detection limit for this instrument is one-hundredth of one percent (0.01%). The instrument is connected to a DAS computer via an analog-to-digital converter for recording resulting values, and the data was recorded in one-minute averages. Zero-grade nitrogen and USEPA Protocol-1 calibration standards were used to calibrate the analytical instrument. The general guidelines for the calibration of a RM analyzer are described above, with the specifics pertaining to the calibration of an O_2 analyzer being set forth in USEPA Method 3A (40 CFR Part 60, Appendix A).

USEPA Method 6C: Sulfur Dioxide Analysis (Instrumental Procedure)

This method was employed to determine the concentration of SO_2 present in the exhaust gas stream. A sample was continuously extracted from the stack and introduced to a RM analyzer for determination of concentration. The minimum detection limit of this analyzer is 0.1 ppm. An analog-to-digital converter connected to a laptop computer directed the resulting values, where the data was recorded in one-minute averages. Zero-grade nitrogen and USEPA Protocol-1 calibration standards were used to calibrate the analytical instrument. The general guidelines for the calibration of a RM analyzer are described above, with the specifics pertaining to the calibration of a SO_2 analyzer being set forth in USEPA Method 6C (40 CFR Part 60, Appendix A).

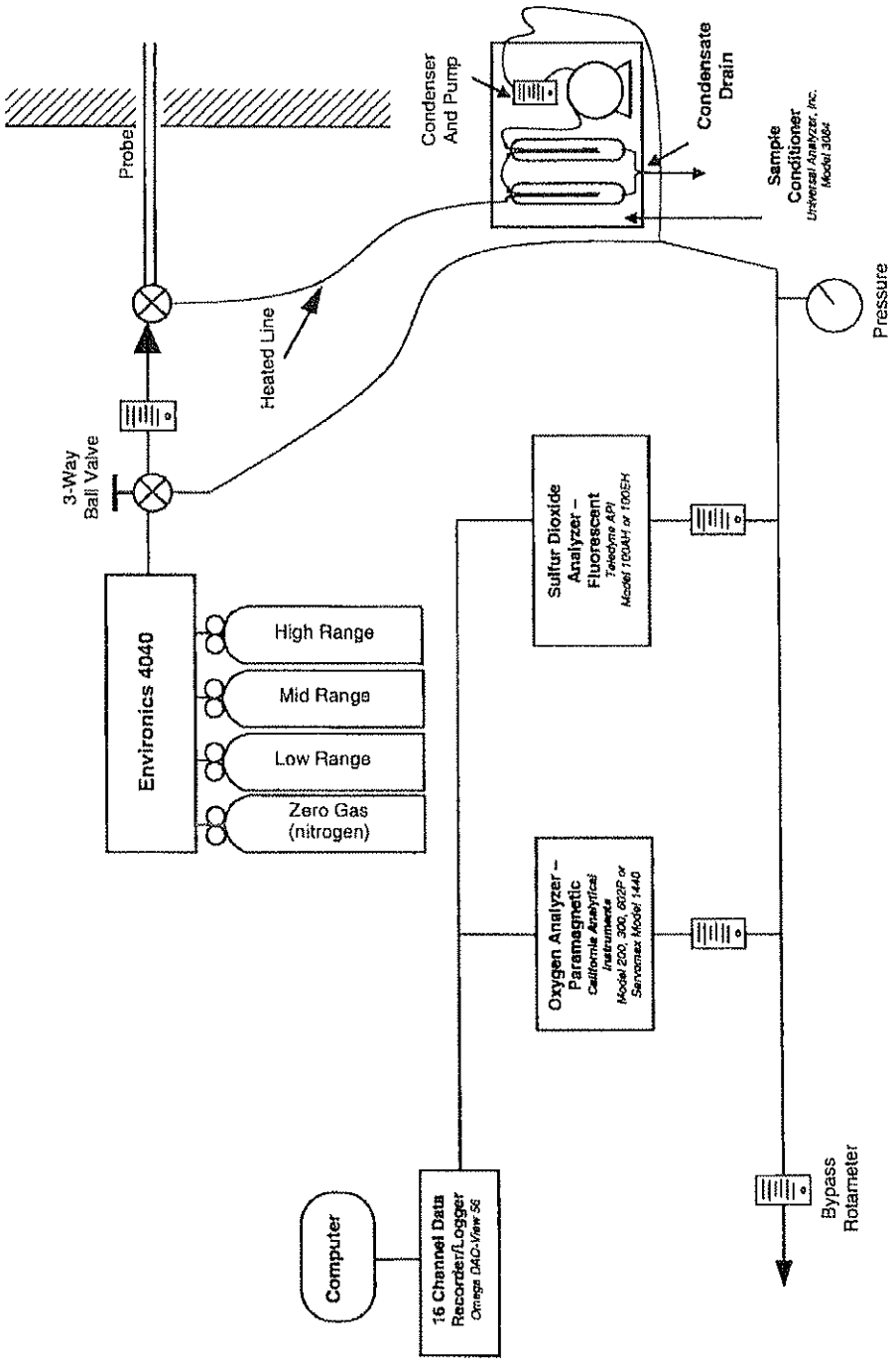

Figure 1-1. Sampling System Schematic

USEPA Method 205: Gas Dilution Verification

All diluted calibration standards were prepared using an Environics Model 4040 Dilution System, which was verified by a field evaluation at the job site prior to testing, following the requirements for USEPA Method 205.

A Servomex Model 1440 O_2 analyzer was calibrated following USEPA Method 3A procedures. After the calibration procedure is completed, diluted mid and high range standards and a mid-range USEPA Protocol 1 Standard was alternately introduced, in triplicate, and an average instrument response was calculated for each standard. No single response can differ by more than ± 2% from the average response for each standard.

The difference between the instrument average and the predicted concentration must be ± 2% for each standard. The difference between the certified gas concentration and the average instrument response for the mid-range USEPA Protocol 1 Standard must be less than ± 2%. Complete documentation of the USEPA Method 205 Dilution System Verification is provided in Appendix C of this report.

SOURCE INFORMATION

The purpose of the Sulfur Recovery Unit (SRU) is to process the hydrogen sulfide bearing gas (acid gas) from the amine regeneration unit and sour water stripping (SWS) unit. Approximately 96% of the feed is converted and recovered and elemental sulfur.

The testing location on the SRU B Incinerator Exhaust Stack consisted of two 3.0-inch diameter port on a 100.5 inch diameter circular stack. The sample port was positioned a distance of 100.0 feet upstream and 75.0 feet downstream from the nearest disturbances. This meets the requirements established in the Code of Federal Regulations for sample locations.

Traversing was performed at the sample points identified below in Figure 1-2. Data for System One is presented in Appendix E and may be compared minute by minute for the referenced test periods.

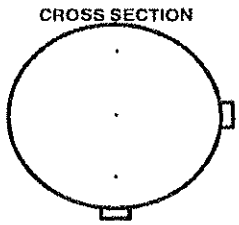

TRAVERSE POINTS: 3
NUMBER OF PORTS: 1
POINTS/PORT: 3
STACK ID: 100.5 in.
PORT LENGTH: 6.0 in.

TRAVERSE POINT NO.	DISTANCE FROM INSIDE WALL, in.
1	16.8
2	50.3
3	83.7

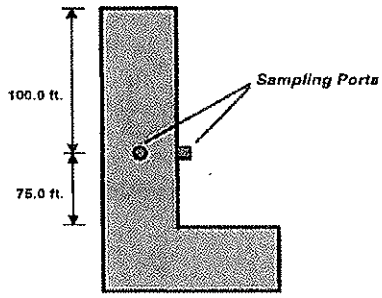

Figure 1-2. Diagram of Testing Location

SAMPLE CALCULATIONS

The following calculations were used in the determination of the relative accuracy for any one constituent being evaluated. The values listed in Table 1-3 below are the actual CEMS and RM SO_2 data obtained during the test. The units are in ppmvd @ 0% O_2.

Run #	1	2	3	4	5	6	7	8	9	10
C_{RM}	147.64	147.01	138.45	135.43	140.73	138.33	137.19	139.63	135.78	130.66
C_{CEMS}	148.52	151.41	151.41	140.75	145.67	142.20	140.81	140.76	136.07	133.21
D_i *	-0.88	-4.40	-12.97	-5.31	-4.94	-3.87	-3.62	-1.13	-0.29	-2.55

* The nine lowest differences betweem RM and CEMS Data were used In determination of relative accuracy.

Table 1-3. SRU B Incinerator RM and CEMS Data for SO_2 in ppmvd @ 0% O_2

Relative Accuracy Calculations

Determination of Average Difference (d_{avg})

$$\bar{d} = \left[\frac{1}{n}\sum_{i=1}^{n} d_i\right]$$

Where:

d = Average difference between RM and CEMS data
n = Number of data points
d_i= Difference between RM and CEMS data for any given point

$$\bar{d} = \frac{1}{9}[d_1 + d_2 + d_3 + \ldots.]$$

$$\bar{d} = \mathbf{2.999}$$

Determination of Standard Deviation (S_d)

$$S_d = \left[\frac{\sum_{i=1}^{n} d_i^2 - \frac{\left(\sum_{i=1}^{n} d_i\right)^2}{n}}{n-1}\right]^{1/2}$$

$$\underline{S_d} = \mathbf{1.862}$$

Determination of Confidence Coefficient

$$CC = \left[\frac{(t_{0.975})(S_d)}{\sqrt{n}} \right]$$

Where:

$t_{0.975}$ = t- value ($t_{0.975} = 2.306$)
S_d = Standard deviation
n = Number of data points = 9

CC = 1.431

Determination of Relative Accuracy

$$RA = \left[\frac{|\bar{d}| + |CC|}{RM_{avg}} \right] x\,100\%$$

RA = 3.18%

Determination of Alternate Relative Accuracy for SO_2

$$ALT\ RA = \left[\frac{|\bar{d}| + |CC|}{App.\ Std.} \right] x\,100\%$$

ALT RA = 1.77%

Determination of Relative Accuracy for O_2

$$RA = |\bar{d}|$$

Where:

$\bar{d}$ = Average difference between RM and CEMS data
d_i = Difference between RM and CEMS data for any given point

$$\bar{d} = \frac{1}{9}[d_1 + d_2 + d_3 + ...]$$

RA for O_2= 0.176

Calibration Correction

$$C_{gas} = (\overline{C} - C_o)(\frac{C_{ma}}{C_m - C_o})$$

Where:

C_{gas} = *Effluent gas concentration (ppmvd)*
C = *Average gas concentration of gas analyzer (ppmvd)*
C_o = *Average of initial and final system calibration bias check responses for zero gas (ppmvd)*
C_m = *Average of initial and final system calibration bias check responses for the upscale calibration gas (ppmvd)*
C_{ma} = *Actual concentration of the upscale calibration gas (ppmvd)*

Concentration (Corrected to 0% O_2)

$$C_{ppmvd\ @\ 0\%\ O_2} = C_{ppmvd}\ x\left(\frac{20.9}{20.9 - \%\ O_2}\right)$$

TEST RESULTS

The RATA results for the SRU B Incinerator are listed on the following pages. The RA results for SO_2 are listed on a ppmvd corrected to 0% O_2 basis, and the O_2 results are shown as a dry percent (%). The limitations for each parameter are presented below with the results. Based on these limitations the SRU B Incinerator CEMS is operating within the relative accuracy limitations established.

RATA Calculations Nine - 21 minute average		
	SO_2 (ppmvd @ 0% O_2)	O_2 (%)
D-Bar=	2.999	0.176
Sigma-D=	1.862	0.045
CC=	1.431	0.034
RA (%RM)	3.18%	0.176
App. Std.	250.0	
RA(%ES)	1.77%	
RA Limit	10% App. Std.	1% O2
PASS RA?	**YES!**	**YES!**

Table 1-2. CEMS RATA Results vs. Allowable.

		RATA Reference Method Data			CEMS Data		
RUN #	Start Time	SO_2 (ppmvd)	SO_2 (ppmvd @ 0% O_2)	O_2 (%)	SO_2 (ppmvd)	SO_2 (ppmvd @ 0% O_2)	O_2 (%)
1	14:07	110.09	147.64	5.316	111.61	148.52	5.195
2	14:48	109.27	147.01	5.366	113.69	151.41	5.208
3	15:29	102.96	138.45	5.356	107.94	151.41	5.192
4	16:10	101.02	135.43	5.310	105.86	140.75	5.181
5	16:51	104.20	140.73	5.424	109.37	145.67	5.208
6	17:32	103.06	138.33	5.329	106.99	142.20	5.176
7	18:13	102.10	137.19	5.346	106.04	140.81	5.161
8	18:54	104.19	139.63	5.304	106.09	140.76	5.149
9	19:35	101.25	135.78	5.315	102.87	136.07	5.101
10	20:16	97.24	130.66	5.345	100.78	133.21	5.090

	Difference		Used Sensor	
RUN #	SO_2 (ppmvd @ 0% O_2)	O_2 (%)	SO_2 (ppmvd @ 0% O_2)	O_2 (%)
1	-0.88	0.122	Y	Y
2	-4.40	0.158	Y	Y
3	-12.97	0.165	N	N
4	-5.31	0.130	Y	Y
5	-4.94	0.216	Y	Y
6	-3.87	0.152	Y	Y
7	-3.62	0.184	Y	Y
8	-1.13	0.155	Y	Y
9	-0.29	0.214	Y	Y
10	-2.55	0.255	Y	Y
Total # Runs			9	9
t-value			2.30600	2.30600

RATA Calculations Nine - 21 minute average		
	SO_2 (ppmvd @ 0% O_2)	O_2 (%)
D-Bar=	2.999	0.176
Sigma-D=	1.862	0.045
CC=	1.431	0.034
RA (%RM)	3.18%	0.176
App. Std.	250.0	
RA(%ES)	1.77%	
RA Limit	10% App. Std.	1% O2
PASS RA?	YES!	YES!

Table 1-4. SRU B Incinerator CEMS RATA Results

APPENDIX A –
Testing Equipment

Testing Equipment

Provided in the Table 1-5 below is a list of all testing equipment used in the in the determination of the RA of the SRU B Incinerator CEMS.

Golden Specialty, Inc.			
Trailer 10			
Constituent	**Make/ Model**	**Operating Range**	**Serial Number**
O_2_1	Servomex / 1440	0-25%	01440D1/4034
SO_2_1	Teledyne / 100EH	0-300 ppm	269
Gas Dilution	Environics / 4040	NA	3100

Table 1-5. Testing Equipment Used

APPENDIX B – Resumes

SCOTT B. SWIGGARD, Ph.D., QSTI
PRESIDENT / TECHNICAL DIRECTOR

Professional Experience Summary

- Broad background in environmental compliance and regulatory issues. Has directed projects associated with air permitting, groundwater contamination, air toxins emissions control, hazardous materials control and reporting, wastewater process control (metals removal), energy conservation, industrial ventilation, noise control, bioremediation, and storm water control.
- Extensive background in emission testing, with over 1,600 tests personally conducted and/or supervised.
- Responsible for the continued development of testing capabilities and their research and development.
- Provides project management for testing at assigned client's facilities. Provides field support to the project managers on testing protocols and methods.
- Responsible for verification and validation on test data as part of a Quality Assurance/ Quality Control Program.

Selected Publications/Presentations

Swiggard, Scott and Spellicy, Robert, PhD., FTIR Monitoring in High Water and Carbon Dioxide Environments. Presented at the 2003 Air and Waste Management Association 96th Annual Conference and Exhibition, San Diego, CA, June 22-26, 2003.

Swiggard, Scott B., Comparative study of NH3 analysis and methods for SCR Slippage. Presented at Source Evaluation Society Annual Meeting, Kiawah Island, North Carolina, 2004

Swiggard, Scott B., Identifying In-Stack Detection Limits and Handling of Non-Detect Data, Presented at Source Evaluation Society Annual Meeting, Rohnert Park California, 2005

Swiggard, Scott B., Why Cooling Towers and Vents matter in Texas!, Presented at Source Evaluation Society Annual Meeting, Hilton Head North Carolina, 2006

Swiggard, Scott B., How accurate are your standards?, Presented at Source Evaluation Society Annual Meeting, Hilton Head North Carolina, 2006

Swiggard, Scott B., Bonnette Sidney, PhD., and Palomarez Jorge., Gas Chromatography (GC) Analysis of HRVOC's in Cooling Towers and Vents; including degradation 1,3-Butadiene in the presence of NOx compounds, Presented at the GAS2006 Conference, Galveston, Texas, April 2006

Swiggard, S., McCulloch, R. Stack Testing for Dummies®, Golden Specialty Edition. Indianapolis: Wiley Publishing, 2011.

Professional Affiliations

Source Evaluation Society (SES) – QSTI I-IV #2006-025
Air and Waste Management Association (AWMA)
Source Testing Accreditation Council (STAC) – Member and Board of Directors
ASTM International, Voting Member D22, #395691

KAREN L. SWIGGARD

VICE PRESIDENT / DIRECTOR OF QUALITY ASSURANCE

Professional Work Summary

- Broad background in safety, environmental compliance and regulatory issues. Has managed projects associated with Hazard Communication, Blood borne pathogens, Tuberculosis Infection Control, Respiratory Projection, Personal Protective Equipment, Life Safety Code, Fire Safety, Electrical Safety, Back Injury Protection, Workplace Violence, Employee Injury and Illness Reporting, Emergency Response, Hazardous Drugs, Ventilation and Indoor Air Quality, and Joint Commission on Accreditation of Healthcare Organizations (JCAHO).
- Extensive background in employee Training in areas of: Hazard Communication, Blood borne pathogens, Tuberculosis Infection Control, Respiratory Projection, Personal Protective Equipment, Fire Safety, Electrical Safety, Back Injury Prevention, Emergency Response, and Computer Ergonomics.
- Developed and presented intensive training courses for Health and Safety professionals at all NASA centers including: Occupational Ergonomics and Blood borne Pathogens.
- While working for Texas Water Commission (now Texas Commission on Environmental Quality, TCEQ), she was responsible for the enforcement of RCRA program in Texas including the inspection and evaluation of RCRA programs at various chemical plants and other facilities handling hazardous waste. Was a key member for emergency response for chemical spills and accidents.
- Extensive experience in Quality Assurance programs including serving as Quality Assurance Officer for the Environmental Health Laboratory for NASA-Johnson Space Center for 5 years, and managing the environment of care accreditation process of Kelsey-Seybold, Houston Texas, for JCAHO in which it was awarded.

Work Experience

Golden Specialty, Inc. (February 1999 - present)
Position: Vice President / Director of Quality Assurance

Kelsey-Seybold Clinic (June 1995 – February 1999)
Position: Manager of Environmental Health and Safety

NASA-Johnson Space Center (April 1986 - June 1995)
Position: Health & Safety Training Specialist/Industrial Hygienist/Quality Assurance Officer

Texas Water Commission (February 1984 – April 1986)
Position: Environmental Quality Specialist

Professional Affiliations

Source Evaluation Society (SES)
National Environmental Laboratory Accreditation Commission (NELAC)
Air and Waste Management Association (AWMA)
American Industrial Hygiene Association (AIHA)

Education

Studies towards Masters in Science in Environmental Science, University of Houston
Bachelor of Science in Environmental Management, University of Houston, 1984
Source Sampling and CEMS Workshop, Walter Smith & Associates, 2002
NIOSH Quality Assurance Officer Training, 1990

GOLDEN SPECIALTY

Air Quality Test Report

DANIEL A. LOUBIERE, QSTI
PROJECT MANAGER

Professional Experience Summary

- Responsible for designing, planning and managing sampling programs, daily assignments of field testing crews, sample analysis, data reduction, QA/QC reviews, and reporting activities.
- Broad background in environmental compliance and regulatory issues. Extensive experience designing and managing test programs to meet federal, state and local compliance demonstration requirements.
- Participated in or supervised over 1,700 tests across the United States, including hazardous waste incinerator trial burns, continuous emission monitoring systems (CEMS) certification, and compliance testing.
- Sampling experience includes flow stream characterization and monitoring of a number of types of flow streams for engineering purposes; emissions sampling for regulatory compliance demonstration; emissions sampling for systems audit requirements of continuous emission monitoring systems (CEMS) and predictive emissions monitoring systems (PEMS).
- Developed and manufactured equipment to perform sampling for highly reactive volatile organic compounds (HRVOC) to comply with TCEQ Chapter 115 Subchapter H requirements. Experienced in modified El Paso Method, Appendix P, (Cooling Tower Sampling for Volatile Organic Compounds); applicable to sampling and troubleshooting leaks in process systems.
- Assist clients in troubleshooting and repairing existing emissions monitoring systems, or designing and implementing new systems.

Work Experience

Golden Specialty, Inc. (June 2007 - Present)
Position: Project Manager

ARI Environmental, Inc. (March 1994 – June 2007)
Position: South Central Regional Manager

Professional Affiliations

Source Evaluation Society (SES) – QSTI I-IV #2008-128
Air and Waste Management Association (AWMA)

Professional Education

24 Hour Hazwoper Training 29 CFR 1910.120
Preparation for the SES QSTI Exam Workshop, Walter Smith and Associates, 2007
Working on general education to be credited to a BS Degree in Environmental Science
Visible Emissions Certified (EPA Method 9)
Qualified Individual – Cylinder Gas Audits
Man-Lift Training, August 2006

GOLDEN SPECIALTY

Air Quality Test Report

GORDON L. GOSSETT, QSTI
PROJECT MANAGER, IT

Professional Experience Summary

- Responsible for coordinating/managing maintenance of all company facilities, grounds, vehicles, trailers, labs, and environmental equipment.
- Responsible for establishing and maintaining a quality control program to monitor key equipment assets and establishing a preventative maintenance process.
- Responsible for designing and building environmental equipment in-house and all equipment and testing supply purchasing.
- 20+ years of Supervisory experience in construction and maintenance.
- Experience in performing maintenance and calibrations on a variety of air testing equipment.
- Experience with EPA testing regulations, including 40 CFR, Part 60 and Part 75.
- CEM instrumentation projects include continuous analysis for carbon monoxide (CO), total oxides of nitrogen (NO_x), oxygen (O_2), and carbon dioxide (CO_2).
- Knowledgeable in methodologies for the testing and analysis of stack gas velocity and moisture content analysis.
- Knowledgeable in the testing requirements and procedures for the testing and analysis of Predictive Emissions monitoring systems (PEMS) and Continuous Emission Monitoring (CEMS).

Work Experience

Golden Specialty, Inc. (October 2003 - Present)
Position: Project Manager, IT

Brown & Root-Shell Chemical Complex (November 2002 – October 2003)
Position: Pipe Foreman

Brown & Root-Exxon Chemical Facility (April 2001 – October 2002)
Position: General Foreman

Encompass Industrial Services-Dow Chemical Company, Seadrift Operations (October 2000 – April 2001)
Position: Supervisor of Maintenance

Brown & Root-Union Carbide Plant (April 1986– October 2000)
Position: Supervisor, Welding Department (Shop & Field)

Professional Affiliations

Source Evaluation Society (SES) – QSTI III #2008-149

Education

Visible Emissions Certified (EPA Method 9)
Source Sampling and CEMS Workshop, Walter Smith & Associates, 2004
Skillpath Seminar-Emergency Response Planning, January 2004
American Welding Society Certified Welding Inspector, April 1998
8-Hr Training in Welding and Quality Control for the Petro-Chem Industry, November 1994
Certified Instructor for The Construction Education Foundation, July 1993
24-hr Training Course-Visual Testing, April 1993
16-hr Training Course-Liquid Penetrant Testing, October 1991
24-hr Radiographic Film Interpretation, May 1990
Victoria College, 1973-1974
Qualified Individual – TCEQ Method 3

GOLDEN SPECIALTY

Air Quality Test Report

SIDNEY B. BONNETTE, Ph.D., QI
SENIOR SCIENTIST

Professional Experience Summary

- Experienced with running and troubleshooting Varian NMR spectrometers and running complex 2D spectra.
- Knowledgeable experience with troubleshooting instrument, electrical, hardware, and software related problems on magnetic sector and MALDI mass spectrometers as well as gas chromatographs.
- Experienced with analysis of SO_2 titrations and spectophotometric applications,
- Proficient with several GC and GCMS methodologies, including Methods TO-14A and TO-15, Method 18 and ASTM 1946.
- GC – FID, TCD, FPD, HID, AED, sulfur, nitrogen (liquid, lpg and gas injectors) – HP 5890 and 6890, HP Chemstation, EZChrom; Micro GC; titrators, autotitrators – Mettler; Atomic Absorption; HPLC – Waters; Refinery Analysis – RFG (oxygenates by OFID, 3606 Benzene, etc.); Wasson OFID (plus in-house designed GC set-up); Polymer testing - Tensile strength, melt index, buoyant densities; Distillation apparatus;
- Famililiarized with USEPA Methods 8290, 1613, and 1668 for analysis of air, water, and soil samples containing dioxins and PCBs.
- Instruments worked on include HP, Agilent, and Carlos-Erba 8000 Gas Chromatographs, Micromass/Waters MALDI and Autospec mass spectrometers, and Perkins-Elmer MultiProbe II digestor robots.

Work Experience

Golden Specialty, Inc. (March 2006 – June 2007 / June 2010 - Present)
Position: Senior Chemist / Senior Scientist

Coyote Golf Carts (June 2007 – June 2010)
Position: Co-owner

Micromass / Waters Corp. (2001 – 2005)
Position: Field Service Engineer

University of New Orleans, Chemistry Department (1999 – 2001)
Position: Technical Specialist

Professional Affiliations

Source Evaluation Society (SES) – QI III

Professional Education

Bachelor of Science in Biochemistry, Louisiana State University, 1994
Doctorate of Science in Analytical Chemistry, University of New Orleans, 1999
Basic Plus Training (H.A.C.S.C.)
Qualified Individual – TCEQ Method 3

GOLDEN SPECIALTY

Air Quality Test Report

PAULA M. METZ, QSTI
REPORTS DEPARTMENT MANAGER

Professional Experience Summary

- Experience with EPA testing regulations, including 40 CFR, Part 60, Part 75, and Part 266, and TCEQ testing regulations, including 30TAC115, 30TAC117, and TCEQ Sampling Procedures Manual.
- Over 6 years of experience and participation in over 500 tests in Texas, Arkansas, Ohio, Mississippi, and Louisiana.
- CEM instrumentation projects include continuous analysis for carbon monoxide (CO), total oxides of nitrogen (NO_x), oxygen (O_2), carbon dioxide (CO_2), total hydrocarbons (THC), and sulfur dioxide (SO_2).
- Sampling experience includes flow stream characterization and monitoring of a number of types of flow streams for engineering purposes; including analysis using 3-D spherical probes per Method 2F, emissions sampling for regulatory compliance demonstration; emissions sampling for systems audit requirements of continuous emission monitoring systems (CEMS).
- Conducted isokinetic sampling and calculations for Methods 1, 1A, 2, 2A, 2F, 3, 3B, 4, and 5, including sample recovery, preservation, and storage at the test site with associate sample custody requirements for the methods listed.
- Knowledgeable in the testing requirements and procedures for the testing and analysis of Predictive Emissions Monitoring Systems (PEMS). Participated in several new source performance standards (NSPS) for development of new PEMS, including initial data collection of emissions.
- Experienced in modified El Paso Method, Appendix P, (Cooling Tower Sampling for Volatile Organic Compounds); applicable to monthly sampling and troubleshooting leaks in Process systems.
- Experienced in report writing, review, and finished product.

Work Experience

Golden Specialty, Inc. (February 2001 - Present)
Position: Reports Department Manager

Professional Affiliations

Source Evaluation Society (SES) – QSTI I-III #2006-026

Education

Associate of Arts – Chemistry, San Jacinto Community College, December 2010
Visible Emissions Certified (EPA Method 9), 2004-2007
12 Hour Basic Instrumentation Training, California Analytical Instruments, January 2003
Source Sampling and CEMS Workshop, Walter Smith & Associates, 2002, 2003 and 2004
Preparation for the SES QSTI Exam Workshop, Walter Smith and Associates, 2005
SkillPath® Seminars, Employee Management and Supervision Workshop, 2003
Hazardous Materials Shipping Qualified, 2006
Man-Lift Training, August 2006
Fred Pryor®:Team Building Seminar, 2007
Fred Pryor®:Excel: Beyond the Basics" Seminar, 2007
Qualified Individual – EPA Method 320 & ASTM 6348-03

BARBARA L. SCHMEITZ

RECORDS COMPLIANCE ANALYST

Professional Experience Summary

- Proficient in operating and maintaining ambient air quality sampling equipment.
- Proficient in collection, processing and analysis of meteorological and chemistry data. Species include carbon monoxide (CO), total oxides of nitrogen (NO_x), oxygen (O_2), carbon dioxide (CO_2), and sulfur dioxide (SO_2).
- Proficient in maintaining, preparing and launching of meteorological, ozone (O_3), and sulfur dioxide (SO_2) sampling equipment.
- Responsible for documenting and maintaining the tracking of project data and test reports.
- In training for data importation for PEMS and CEMS RATAs, as well as multiple compliance test projects.
- In training for report writing, review and finished product.
- Proficient in Microsoft Word, Excel, Power Point and Access.
- Proficient in Esri GIS software ArcMAP, ArcGIS and ArcView.
- Experienced in WaveMetrics scientific graphing, data analysis, image processing and programming software IGOR.
- Experienced in C++ and MATLAB programming
- Fluent in Dutch and English, experienced in German and French.

Work Experience

Golden Specialty, Inc. (February 2011 – Present)
Position: Records Compliance Analyst

University of Houston, IMAQS – Institute for Multi-Dimensional Air Quality Studies (January 2009 – February 2011)
Position: Research Technician

C. Hecht & Co. (Netherlands) (November 2002 – November 2004)
Position: Sales & Production Coordinator

Grafico (Netherlands) (October 2000 – October 2002)
Position: Sales & Production Coordinator

Grafico (Netherlands) (August 1997 – October 2000)
Position: Engraver

Education

Bachelors of Science – Environmental Science, Environmental Systems & Modeling, University of Houston, May 2010
Associates of Science – Engineering / Environmental Science, Houston Community College, August 2007

GOLDEN SPECIALTY

Air Quality Test Report

BRYAN JOHNSON
ENVIRONMENTAL TECHNICIAN

Professional Experience Summary

- Experience with EPA testing regulations, including 40 CFR, Part 60 and Part 75.
- CEM instrumentation projects include continuous analysis for carbon monoxide (CO), total oxides of nitrogen (NO_x), oxygen (O_2), and carbon dioxide (CO_2).
- Knowledgeable in all required regulations and methodologies for the testing and analysis of stack gas velocity and moisture content analysis.
- Knowledgeable in testing requirements and procedures for the testing and analysis of Predictive Emissions monitoring systems (PEMS) in accordance with Title 30 of the Texas Administrative Code, Chapter 117.
- Knowledgeable in OSHA, ISO 9001 regulations.

Work Experience

Golden Specialty, Inc. (September 2003-present)
Position: Environmental Technician

Texas Department of Criminal Justice (August 2002-June 2003)
Position: Correctional Officer (COIII)

TASC Environmental Services (February 1999-October 2001)
Position: Environmental Specialist

Baker Hughes Petrolite Corporation (May 1991-February 1999)
Position: Chemical Operator

Professional Affiliations

Source Evaluation Society (SES)

Education

Source Sampling and CEMS Workshop, Walter Smith & Associates, 2003 and 2004
Correctional Officer Training Program, College of the Mainland, 2002
ISO 9000 Course, San Jacinto College, 1996
Lamar Industrial Fire School, Lamar University, 1995
Chemical Process Technician Course, Petrolite Corporation, 1992
Man-Lift Training (3/1/05)
Source Sampling and CEMS Workshop, Walter Smith & Associates, 2004
Preparation for the SES QSTI Exam Workshop, Walter Smith and Associates, 2005
Fred Pryor®:Team Building Seminar, 2007
Qualified Individual – Cylinder Gas Audits
Qualified Individual – Instrumental Methods
Qualified Individual – Portable Combustion Analyzer
Qualified Individual – USEPA Reference Methods 1-4

APPENDIX C – Calibration Data

Valero Refining-Texas, L.P.
Houston Refinery
Houston, TX

Calibration Data

SRU 8 Incinerator
March 22, 2012

Calibration Gas & Analyzer Configuration Data		O_2_1	SO_2_1
Trailer 10	Mfg. And Model No.:	Servomex 1440	Teledyne 100EH
	Serial Number:	01440D1/4034	269
	Range Setting:	25	300
	Calibration Span:	20.00	208.0
Zero Gas (N_2)	Cyl #:	Nitrogen	Nitrogen
	value:	0.00	0.0
Mid Calibration Gas	Cyl #:	ALM028603	CC102531
	value:	9.67	100.0
High Calibration Gas	Cyl #:	ALM008502	CC102531
	value:	20.00	208.0
Bias Gas Used		MID	MID
Calibration Error			
	Zero Reading	**-0.03**	**0.0**
	Mid Reading	**9.66**	**100.3**
	High Reading	**20.03**	**207.9**
Percent Error	Zero Reading	**0.15**	**0.00**
	Mid Reading	**0.05**	**0.14**
	High Reading	**0.15**	**0.05**
RA Run 1		O_2_1	SO_2_1
Pretest Bias	Zero Reading	**-0.01**	**1.7**
	Upscale Reading	**9.69**	**100.2**
	Zero Bias	0.10	0.82
	Span Bias	0.15	-0.05
Post Test Bias	Zero Reading	**-0.04**	**1.4**
	Upscale Reading	**9.66**	**100.3**
	Zero Bias	-0.05	0.67
	Span Bias	0.00	0.00
	Zero Drift	0.15	0.14
	Span Drift	0.15	0.05
Calculated Data			
	Avg. Zero Reading (C_o)=	-0.025	1.550
	Avg. Upscale Reading (C_m)=	9.675	100.250
	Actual Upscale Concentration (C_{ma})=	9.67	100.00
	Measured Concentration (C_{avg}) = RA Run 1	5.308	110.205
	Corrected Concentration (C_{gas}) = $C_{gas} = (C_{avg}-C_o) \times (C_{ma}/(C_m-C_o))$ RA Run 1	**5.316**	**110.09**
RA Run 2		O_2_1	SO_2_1
Pretest Bias	Zero Reading	**-0.04**	**1.4**
	Upscale Reading	**9.66**	**100.3**
	Zero Bias	-0.05	0.67
	Span Bias	0.00	0.00
Post Test Bias	Zero Reading	**-0.05**	**1.2**
	Upscale Reading	**9.65**	**100.9**
	Zero Bias	-0.10	0.58
	Span Bias	-0.05	0.29
	Zero Drift	0.05	0.10
	Span Drift	0.05	0.29
Calculated Data			
	Avg. Zero Reading (C_o)=	-0.045	1.300
	Avg. Upscale Reading (C_m)=	9.655	100.600
	Actual Upscale Concentration (C_{ma})=	9.67	100.00
	Measured Concentration (C_{avg}) = RA Run 2	5.337	109.804
	Corrected Concentration (C_{gas}) = $C_{gas} = (C_{avg}-C_o) \times (C_{ma}/(C_m-C_o))$ RA Run 2	**5.366**	**109.27**

Valero Refining-Texas, L.P.
Houston Refinery
Houston, TX

Calibration Data

SRU B Incinerator
March 22, 2012

RA Run 3		O_2_1	SO_2_1
Pretest Bias	Zero Reading	-0.05	1.2
	Upscale Reading	9.65	100.9
	Zero Bias	-0.10	0.58
	Span Bias	-0.05	0.29
Post Test Bias	Zero Reading	-0.05	2.0
	Upscale Reading	9.65	102.9
	Zero Bias	-0.10	0.96
	Span Bias	-0.05	1.25
	Zero Drift	0.00	0.38
	Span Drift	0.00	0.96
Calculated Data			
	Avg. Zero Reading (C_o)=	-0.050	1.600
	Avg. Upscale Reading (C_m)=	9.650	101.900
	Actual Upscale Concentration (C_{ma})=	9.67	100.00
	Measured Concentration (C_{avg}) = RA Run 3	5.323	104.873
	Corrected Concentration (C_{gas}) = C_{gas}= (C_{avg}-C_o) x (C_{ma}/(C_m-C_o)) RA Run 3	5.356	102.96
RA Run 4		O_2_1	SO_2_1
Pretest Bias	Zero Reading	-0.05	2.0
	Upscale Reading	9.65	102.9
	Zero Bias	-0.10	0.96
	Span Bias	-0.05	1.25
Post Test Bias	Zero Reading	-0.04	1.6
	Upscale Reading	9.64	100.8
	Zero Bias	-0.05	0.77
	Span Bias	-0.10	0.24
	Zero Drift	0.05	0.19
	Span Drift	0.05	1.01
Calculated Data			
	Avg. Zero Reading (C_o)=	-0.045	1.800
	Avg. Upscale Reading (C_m)=	9.645	101.850
	Actual Upscale Concentration (C_{ma})=	9.67	100.00
	Measured Concentration (C_{avg}) = RA Run 4	5.276	102.871
	Corrected Concentration (C_{gas}) = C_{gas}= (C_{avg}-C_o) x (C_{ma}/(C_m-C_o)) RA Run 4	5.310	101.02
RA Run 5		O_2_1	SO_2_1
Pretest Bias	Zero Reading	-0.04	1.6
	Upscale Reading	9.64	100.8
	Zero Bias	-0.05	0.77
	Span Bias	-0.10	0.24
Post Test Bias	Zero Reading	-0.04	1.8
	Upscale Reading	9.66	101.6
	Zero Bias	-0.05	0.87
	Span Bias	0.00	0.62
	Zero Drift	0.00	0.10
	Span Drift	0.10	0.38
Calculated Data			
	Avg. Zero Reading (C_o)=	-0.040	1.700
	Avg. Upscale Reading (C_m)=	9.650	101.200
	Actual Upscale Concentration (C_{ma})=	9.67	100.00
	Measured Concentration (C_{avg}) = RA Run 5	5.396	105.361
	Corrected Concentration (C_{gas}) = C_{gas}= (C_{avg}-C_o) x (C_{ma}/(C_m-C_o)) RA Run 5	5.424	104.20

Valero Refining-Texas, L.P.
Houston Refinery
Houston, TX

Calibration Data

SRU B Incinerator
March 22, 2012

RA Run 6		O_2_1	SO_2_1
Pretest Bias	Zero Reading	-0.04	1.8
	Upscale Reading	9.66	101.6
	Zero Bias	-0.05	0.87
	Span Bias	0.00	0.62
Post Test Bias	Zero Reading	-0.03	0.9
	Upscale Reading	9.66	100.1
	Zero Bias	0.00	0.43
	Span Bias	0.00	-0.10
	Zero Drift	0.05	0.43
	Span Drift	0.00	0.72
Calculated Data			
	Avg. Zero Reading (C_o)=	-0.035	1.350
	Avg. Upscale Reading (C_m)=	9.660	100.850
	Actual Upscale Concentration (C_{ma})=	9.67	100.00
	Measured Concentration (C_{avg}) = RA Run 6	5.307	103.899
	Corrected Concentration (C_{gas}) = C_{gas}= (C_{avg}-C_o) x (C_{ma}/(C_m-C_o)) RA Run 6	5.329	103.06
RA Run 7		O_2_1	SO_2_1
Pretest Bias	Zero Reading	-0.03	0.9
	Upscale Reading	9.66	100.1
	Zero Bias	0.00	0.43
	Span Bias	0.00	-0.10
Post Test Bias	Zero Reading	-0.04	0.4
	Upscale Reading	9.67	99.6
	Zero Bias	-0.05	0.19
	Span Bias	0.05	-0.34
	Zero Drift	0.05	0.24
	Span Drift	0.05	0.24
Calculated Data			
	Avg. Zero Reading (C_o)=	-0.035	0.650
	Avg. Upscale Reading (C_m)=	9.665	99.850
	Actual Upscale Concentration (C_{ma})=	9.67	100.00
	Measured Concentration (C_{avg}) = RA Run 7	5.327	101.933
	Corrected Concentration (C_{gas}) = C_{gas}= (C_{avg}-C_o) x (C_{ma}/(C_m-C_o)) RA Run 7	5.346	102.10
RA Run 8		O_2_1	SO_2_1
Pretest Bias	Zero Reading	-0.04	0.4
	Upscale Reading	9.67	99.6
	Zero Bias	-0.05	0.19
	Span Bias	0.05	-0.34
Post Test Bias	Zero Reading	-0.04	0.2
	Upscale Reading	9.68	99.6
	Zero Bias	-0.05	0.10
	Span Bias	0.10	-0.34
	Zero Drift	0.00	0.10
	Span Drift	0.05	0.00
Calculated Data			
	Avg. Zero Reading (C_o)=	-0.040	0.300
	Avg. Upscale Reading (C_m)=	9.675	99.600
	Actual Upscale Concentration (C_{ma})=	9.67	100.00
	Measured Concentration (C_{avg}) = RA Run 8	5.289	103.762
	Corrected Concentration (C_{gas}) = C_{gas}= (C_{avg}-C_o) x (C_{ma}/(C_m-C_o)) RA Run 8	5.304	104.19

Valero Refining-Texas, L.P.
Houston Refinery
Houston, TX

Calibration Data

SRU B Incinerator
March 22, 2012

RA Run 9		O_2_1	SO_2_1
Pretest Bias	Zero Reading	**-0.04**	**0.2**
	Upscale Reading	**9.68**	**99.6**
	Zero Bias	-0.05	0.10
	Span Bias	0.10	-0.34
Post Test Bias	Zero Reading	**-0.03**	**0.0**
	Upscale Reading	**9.68**	**99.7**
	Zero Bias	0.00	0.00
	Span Bias	0.10	-0.29
	Zero Drift	0.05	0.10
	Span Drift	0.00	0.05
Calculated Data			
	Avg. Zero Reading (C_o)=	-0.035	0.100
	Avg. Upscale Reading (C_m)=	9.680	99.650
	Actual Upscale Concentration (C_{ma})=	9.67	100.00
	Measured Concentration (C_{avg}) = RA Run 9	5.305	100.894
	Corrected Concentration (C_{gas}) = C_{gas}= (C_{avg}-C_o) x (C_{ma}/(C_m-C_o)) RA Run 9	**5.315**	**101.25**
RA Run 10		O_2_1	SO_2_1
Pretest Bias	Zero Reading	**-0.03**	0.0
	Upscale Reading	**9.68**	**99.7**
	Zero Bias	0.00	0.00
	Span Bias	0.10	-0.29
Post Test Bias	Zero Reading	**-0.04**	**-0.4**
	Upscale Reading	**9.68**	**99.2**
	Zero Bias	-0.05	-0.19
	Span Bias	0.10	-0.53
	Zero Drift	0.05	0.19
	Span Drift	0.00	0.24
Calculated Data			
	Avg. Zero Reading (C_o)=	-0.035	-0.200
	Avg. Upscale Reading (C_m)=	9.680	99.450
	Actual Upscale Concentration (C_{ma})=	9.67	100.00
	Measured Concentration (C_{avg}) = RA Run 10	5.335	96.702
	Corrected Concentration (C_{gas}) = C_{gas}= (C_{avg}-C_o) x (C_{ma}/(C_m-C_o)) RA Run 10	**5.345**	**97.24**

AIR LIQUIDE Air Liquide America Specialty Gases LLC | Scott

RATA CLASS

Dual-Analyzed Calibration Standard

11426 FAIRMONT PKWY, LA PORTE, TX 77571 Phone: 800-248-1427 Fax: 281-474-8419

CERTIFICATE™ OF ACCURACY: Interference Free Multi-Component EPA Protocol Gas

Assay Laboratory - PGVP Vendor ID: A32011

AIR LIQUIDE AMERICA SPECIALTY GASES LLC
11426 FAIRMONT PKWY
LA PORTE, TX 77571

P.O. No.: SBS081602
Document # : 44564513-002

Customer
GOLDEN SPECIALTY CONSULTING, LTD

GORDON GOSSETT
931 SEACO COURT
DEER PARK TX 77536
US

ANALYTICAL INFORMATION Gas Type : OCC

This certification was performed according to EPA Traceability Protocol For Assay & Certification of Gaseous Calibration Standards; Procedure G-1; September, 1997.

Cylinder Number: ALM008502 **Certification Date:** 05Dec2011 **Exp. Date:** 05Dec2014
Cylinder Pressure*:** 1850 PSIG **Batch No:** LAP0055760

COMPONENT	CERTIFIED CONCENTRATION (Moles)		ACCURACY**	TRACEABILITY
CARBON DIOXIDE	19.1	%	+/- 1%	Direct NIST and VSL
CARBON MONOXIDE	394	PPM	+/- 1%	Direct NIST and VSL
OXYGEN	20.0	%	+/- 1%	Direct NIST and VSL
NITROGEN		BALANCE		

*** Do not use when cylinder pressure is below 150 psig.
** Analytical accuracy is based on the requirements of EPA Protocol Procedure G1, September 1997.

REFERENCE STANDARD

TYPE/SRM NO.	EXPIRATION DATE	CYLINDER NUMBER	CONCENTRATION		COMPONENT
NTRM 2300	02Jan2012	K024700	23.01	%	CARBON DIOXIDE
NTRM 1680	16Jul2017	KAL003939	499.8	PPM	CARBON MONOXIDE
NTRM 2659	02Oct2012	1D003416	20.85	%	OXYGEN

INSTRUMENTATION

INSTRUMENT/MODEL/SERIAL#	DATE LAST CALIBRATED	ANALYTICAL PRINCIPLE
FTIR//MG-09-149	02Dec2011	FTIR
SIEMENS CO/ULTRAMAT 6E-HIGH/W0355	17Nov2011	NDIR
SERVOMEX/MODEL 244A/701/716	01Dec2011	PARAMAGNETIC

ANALYZER READINGS

(Z = Zero Gas R = Reference Gas T = Test Gas r = Correlation Coefficient)

First Triad Analysis | **Second Triad Analysis** | **Calibration Curve**

CARBON DIOXIDE

Date: 05Dec2011 Response Unit: %
Z1 = 0.00058 R1 = 23.07620 T1 = 19.15157
R2 = 23.11365 Z2 = 0.00506 T2 = 19.16894
Z3 = 0.00629 T3 = 19.19829 R3 = 23.11998
Avg. Concentration: 19.09 %

Concentration = A + Bx + Cx2 + Dx3 + Ex4
r = 9.99997E-1
Constants: A = 0.00000E+0
B = 9.05981E-1 C = 1.21380E-2
D = 0.00000E+0 E = 0.00000E+0

CARBON MONOXIDE

Date: 30Nov2011 Response Unit: PPM
Z1 = 0.00000 R1 = 501.5000 T1 = 395.3000
R2 = 501.4000 Z2 = 0.00000 T2 = 395.3000
Z3 = 0.00000 T3 = 395.3000 R3 = 501.4000
Avg. Concentration: 393.9 PPM

Date: 08Dec2011 Response Unit: PPM
Z1 = 0.00000 R1 = 501.2000 T1 = 394.8000
R2 = 501.2000 Z2 = 0.00000 T2 = 394.8000
Z3 = 0.00000 T3 = 394.8000 R3 = 501.2000
Avg. Concentration: 393.6 PPM

Concentration = A + Bx + Cx2 + Dx3 + Ex4
r = 0.9999978
Constants: A = -0.38639329
B = 0.999583023 C =
D = E =

OXYGEN

Date: 08Dec2011 Response Unit: VOLTS
Z1 = 0.00000 R1 = 0.84000 T1 = 0.80500
R2 = 0.84000 Z2 = 0.00000 T2 = 0.80500
Z3 = 0.00000 T3 = 0.80500 R3 = 0.84000
Avg. Concentration: 19.98 %

Concentration = A + Bx + Cx2 + Dx3 + Ex4
r = 0.9999996
Constants: A = -0.00147788
B = 24.85715966 C =
D = E =

Special Notes: CGA 590 ; DEW PT. 40 DEG F.

APPROVED BY: DAVID KELLY

AIR LIQUIDE Air Liquide America Specialty Gases LLC | Scott

RATA CLASS

Dual-Analyzed Calibration Standard

11426 FAIRMONT PKWY, LA PORTE, TX 77571 Phone: 800-248-1427 Fax: 281-474-8419

CERTIFICATE™ OF ACCURACY: Interference Free Multi-Component EPA Protocol Gas

Assay Laboratory - PGVP Vendor ID: A32012

AIR LIQUIDE AMERICA SPECIALTY GASES LLC
11426 FAIRMONT PKWY
LA PORTE, TX 77571

P.O. No.: SBS081602
Document # : 45449781-002

Customer
GOLDEN SPECIALTY CONSULTING, LTD

GORDON GOSSETT
931 SEACO COURT
DEER PARK TX 77536
US

ANALYTICAL INFORMATION Gas Type : OCC

This certification was performed according to EPA Traceability Protocol For Assay & Certification of Gaseous Calibration Standards; Procedure G-1; September, 1997.

Cylinder Number: ALM028603 **Certification Date:** 04May2011 **Exp. Date:** 04May2014
Cylinder Pressure*:** 2000 PSIG **Batch No:** LAP0060745

COMPONENT	CERTIFIED CONCENTRATION (Moles)		ACCURACY**	TRACEABILITY
CARBON DIOXIDE	9.59	%	+/- 1%	Direct NIST and VSL
CARBON MONOXIDE	197	PPM	+/- 1%	
OXYGEN	9.67	%	+/- 1%	
NITROGEN		BALANCE		

*** Do not use when cylinder pressure is below 150 psig.
** Analytical accuracy is based on the requirements of EPA Protocol Procedure G1, September 1997.

REFERENCE STANDARD

TYPE/SRM NO.	EXPIRATION DATE	CYLINDER NUMBER	CONCENTRATION		COMPONENT
NTRM 1674	03Feb2016	K009587	7.016	%	CARBON DIOXIDE
NTRM 1679	25Aug2016	KAL003156	101.0	PPM	CARBON MONOXIDE
NTRM 2350	01May2013	K026427	23.50	%	OXYGEN

INSTRUMENTATION

INSTRUMENT/MODEL/SERIAL#	DATE LAST CALIBRATED	ANALYTICAL PRINCIPLE
FTIR//MG-09-149	21Apr2011	FTIR
SIEMENS CO/ULTRAMAT 6E-HIGH/WO355	09May2011	NDIR
SERVOMEX/MODEL 244A/701/716	25Apr2011	PARAMAGNETIC

ANALYZER READINGS

(Z = Zero Gas R = Reference Gas T = Test Gas r = Correlation Coefficient)

First Triad Analysis | **Second Triad Analysis** | **Calibration Curve**

CARBON DIOXIDE

Date: 05May2011 Response Unit: %
Z1 = 0.00150 R1 = 6.87982 T1 = 9.40809
R2 = 6.89455 Z2 = 0.00295 T2 = 9.41586
Z3 = 0.00309 T3 = 9.43187 R3 = 6.90539
Avg. Concentration: 9.587 %

Concentration = A + Bx + Cx2 + Dx3 + Ex4
r = 9.99990E-1
Constants: A = 0.00000E+0
B = 7.32425E-1 C = 7.66800E-3
D = 0.00000E+0 E = 0.00000E+0

CARBON MONOXIDE

Date: 02May2011 Response Unit: PPM
Z1 = 0.00000 R1 = 101.0000 T1 = 195.8500
R2 = 101.0000 Z2 = 0.00000 T2 = 195.8500
Z3 = 0.00000 T3 = 195.8500 R3 = 101.0000
Avg. Concentration: 197.4 PPM

Date: 09May2011 Response Unit: PPM
Z1 = 0.00000 R1 = 101.5000 T1 = 195.9500
R2 = 101.5000 Z2 = 0.00000 T2 = 195.9500
Z3 = 0.00000 T3 = 195.9500 R3 = 101.5000
Avg. Concentration: 196.5 PPM

Concentration = A + Bx + Cx2 + Dx3 + Ex4
r = 0.999999
Constants: A = -0.02756826
B = 0.99758686 C =
D = E =

OXYGEN

Date: 09May2011 Response Unit: VOLTS
Z1 = 0.00000 R1 = 0.94000 T1 = 0.38700
R2 = 0.94000 Z2 = 0.00000 T2 = 0.38700
Z3 = 0.00000 T3 = 0.38700 R3 = 0.94000
Avg. Concentration: 9.667 %

Concentration = A + Bx + Cx2 + Dx3 + Ex4
r = 0.9999987
Constants: A = 0.000249421
B = 24.9768807 C =
D = E =

Special Notes: CGA 590 ; DEW PT. 40 DEG. F.

APPROVED BY: DAVID KELLY

AIR LIQUIDE Air Liquide America Specialty Gases LLC Scott

RATA CLASS

Dual-Analyzed Calibration Standard

11426 FAIRMONT PKWY, LA PORTE, TX 77571 Phone: 800-248-1427 Fax: 281-474-8419

CERTIFICATE OF ACCURACY: EPA Protocol Gas

Assay Laboratory

AIR LIQUIDE AMERICA SPECIALTY GASES LLC
11426 FAIRMONT PKWY
LA PORTE, TX 77571

P.O. No.: SBS081602
Document # : 39077617-001

Customer

GOLDEN SPECIALTY CONSULTING, LTD

931 SEACO COURT
DEER PARK TX 77536
US

ANALYTICAL INFORMATION

This certification was performed according to EPA Traceability Protocol For Assay & Certification of Gaseous Calibration Standards; Procedure G-1; September, 1997.

Cylinder Number: CC102531 **Certification Date:** 18Oct2010 **Exp. Date:** 17Oct2012
Cylinder Pressure*:** 1900 PSIG **Batch No:** LAP0026347

COMPONENT	CERTIFIED CONCENTRATION (Moles)		ACCURACY**	TRACEABILITY
SULFUR DIOXIDE *	208	PPM	+/- 1%	Direct NIST and VSL
NITROGEN		BALANCE		

*** Do not use when cylinder pressure is below 150 psig.
** Analytical accuracy is based on the requirements of EPA Protocol Procedure G1, September 1997.

REFERENCE STANDARD

TYPE/SRM NO.	EXPIRATION DATE	CYLINDER NUMBER	CONCENTRATION	COMPONENT
NTRM 0260	15Jan2012	KAL003774	255.5 PPM	SULFUR DIOXIDE

INSTRUMENTATION

INSTRUMENT/MODEL/SERIAL#	DATE LAST CALIBRATED	ANALYTICAL PRINCIPLE
FTIR//000929060	18Oct2010	FTIR

ANALYZER READINGS

(Z = Zero Gas R = Reference Gas T = Test Gas r = Correlation Coefficient)

First Triad Analysis

SULFUR DIOXIDE *
Date: 11Oct2010 Response Unit: PPM
Z1 = 0.05362 R1 = 256.0440 T1 = 208.7109
R2 = 256.1932 Z2 = 0.08733 T2 = 208.7523
Z3 = 0.17498 T3 = 209.0065 R3 = 256.4598
Avg. Concentration: 208.2 PPM

Second Triad Analysis

Date: 18Oct2010 Response Unit: PPM
Z1 = -0.02753 R1 = 255.6295 T1 = 208.5685
R2 = 255.8260 Z2 = 0.05250 T2 = 208.6261
Z3 = 0.08012 T3 = 208.7878 R3 = 255.8379
Avg. Concentration: 208.4 PPM

Calibration Curve

Concentration = A + Bx + Cx2 + Dx3 + Ex4
r = 9.99997E-1
Constants: A = 0.00000E+0
B = 1.00332E+0 C = 0.00000E+0
D = 0.00000E+0 E = 0.00000E+0

APPROVED BY: Ron Stitt

Method 205 Validation

Gas Mixing System	Maker/Model	Environics 4040	Serial No	3100	Range:	0-100%
O_2 Analyzer	Maker/Model	Servomex 1440	Serial No	01440D1/4034	Range:	0-25%
High O_2 (%)	20.0	Cylinder No.	ALM008502	Expiration Date:		12/6/2014
Mid O_2 (%)	9.67	Cylinder No.	ALM028603	Expiration Date:		5/4/2014
Date:	3/21/2012	Time	NA			
Personnel:	Dan Loubiere					

Validation Data

Target Concentration	Allow Range (%)		Run	Concentration (%)	Average (%)	Allow Range (%)		Within 2% Average (?)	Meet Requirement (?)
14.0	13.72	14.28	1	14.07	14.05	13.77	14.33	YES	YES
			2	14.03				YES	
			3	14.04				YES	
8.0	7.84	8.16	1	8.01	8.01	7.85	8.17	YES	YES
			2	8.01				YES	
			3	8.00				YES	

Mid-Gas Check

Target Concentration	Allow Range (%)		Run	Concentration (%)	Average (%)	Allow Range (%)		Within 2% Average (?)	Meet Requirement (?)
9.67	9.48	9.86	1	9.68	9.68	9.49	9.87	YES	YES
			2	9.68				YES	
			3	9.68				YES	

GOLDEN SPECIALTY

Hand Check Calculations

FACILITY: Valero Houston		DATE: 3/22/12	
SOURCE NAME: SRU B	CITY, STATE: Houston, TX		RUN NO: 6

	O_2	CO_2	SO_2	NO_x	CO	THC
Upscale gas - C_{ma}	9.66		100.0			
Span (ppm,%) *	20.0		208.0			

Difference = Final Reading - Initial Reading %Zero = (Zero difference / Span)*100 %Span = (Span difference / Span)*100

Run No. and Pollutant	ZERO			UPSCALE		
	Initial Reading	Final Reading	Average (C_o) (ppm, %) *	Initial Reading	Final Reading	Average (C_m) (ppm, %) *
O_2	-0.04	-0.03	-0.035	9.66	9.66	9.66
CO_2						
SO_2	1.80	0.9	1.35	101.6	100.1	100.85
NO_x						
CO						
THC						

O_2 for Correction %	F Factor dscf/mmBtu	GCV	Fuel Flow Rate	Conversion Factor	Q_{std} dscf/hr	Q_s scf/hr
0						

C_o = (Initial Zero Reading + Final Zero Reading)/2

C_m = (Initial Span Reading + Final Span Reading)/2

$C_{gas} = (C_{avg} - C_o) * (C_{ma} / (C_m - C_o))$

C_{gas} Corrrected = $C_{gas} * ((20.9 - Corr.\ O_2) / (20.9 - \%\ O_2))$

$C_d = (C_{gas} * M.W.) / (385.4 * 1{,}000{,}000)$

lb/MMBtu = C_d * F Factor * (20.9 / (20.9 - %O_2))

lb/hr = lb/MMBtu * GCV * Fuel Flow Rate * Conversion Factor

lb/hr = lb/dscf x Q_{std} (dscf/hr)

Run No. and Pollutant	C_{avg} Uncorrected Stack Gas Concentration (ppm, %) *	C_o Average of Zero Gas	C_m Average of Upscale Gas	C_{gas} Corrected Stack Gas Concentration (ppm, %) *	M.W. Molecular Weight	C_{gas} Corrected Concentration in ppm @ ___ % O_2	C_d Concentration in lb/dscf	lb/MMBtu Emission Rate lb/MMBtu	lb/hr Emission Rate lb/hr
O_2	5.307	-0.035	9.66	5.328	NA	NA	NA	NA	NA
CO_2					NA	NA	NA	NA	NA
SO_2	103.999	1.35	100.85	103.06	64	138.33	1.71E-05		16.758
NO_x					46				
CO					28				
THC					44.097 (as C_3H_8)				

Note * O_2 and CO_2 are expressed in percent.

Calc. QA Performed by KJR 4/2/12

GOLDEN SPECIALTY

Relative Accuracy Hand Check Calculations

FACILITY:	Valero	DATE:	3/22/12
SOURCE NAME:	SRU B	CITY, STATE:	Houston, TX
COMPOUND:	O_2	UNITS:	Alky

Relative Accuracy Test No.	Date	Time	Reference Sample (RM)	Analyzer Reading	Difference DIFF	No. of Sets	$t_{0.975}$ Values for No. of Sets	Difference Squared Diff²
1	3-22	1407	5.316	5.195	0.121	1	NA	0.014641
2		1449	5.366	5.208	0.158	2	12.706	0.024964
4		1616	5.310	5.181	0.129	3	4.303	0.016641
5		1651	5.424	5.208	0.216	4	3.182	0.046656
6		1732	5.329	5.176	0.153	5	2.776	0.023409
7		1813	5.346	5.161	0.185	6	2.571	0.034225
8		1854	5.304	5.149	0.155	7	2.447	0.024025
9		1935	5.315	5.101	0.214	8	2.365	0.045796
10		2016	5.345	5.090	0.255	9	2.306	0.065025
						10	2.262	
						11	2.228	
						12	2.201	
			KJR 04/02/12 5.3344 48.055					
		Avg. RM =		SUM DIFF =	1.586		Sum Diff² =	0.295

cc = confidence coefficient.
S_d = Standard Deviation.
AS = applicable standard.

Avg. RM = average reference method value.
|d| = absolute value of mean of the differences.
|cc| = absolute value of the confidence coefficient.

Diff = RM - Analyzer Reading

$|d| = |\text{SUM DIFF}| / \text{No. of Sets}$ $\quad |d| =$ 0.1762

$S_d = ([\text{[Sum Diff}^2] - ((\text{SUM DIFF})^2 / n)] / n-1)^{1/2}$ $\quad S_d =$ 0.04457

$cc = t_{0.975} * [Sd / (n^{1/2})]$ $\quad cc =$ 0.03426

Relative Accuracy versus Mean Reference Method Sample

$RA = [(|d| + |cc|) / \text{Avg. RM}] * 100 =$ KJR 04/02/12 0.176

Allowable Limits:
Limit: 10% - CO Limit: 20% - O_2 & CO_2
Limit: 20% - NO_x Limit: 20% - SO_2
Allowable Limits Acid Rain :
Limit: 10% - NO_x/O_2 System in lb/MMBtu

RA =

Relative Accuracy versus Applicable Standard

$RA = [(|d| + |cc|) / \text{applicable standard}] * 100$

Allowable Limits:
Limit: 5% - CO Limit: 1% - O_2 & CO_2
Limit: 10% - NO_x Limit: 10% - SO_2
Allowable Limits Acid Rain :
Limit: 0.02 lb/MMBtu for sources with emissions of < 0.20 lb/MMBtu
PS 4A: |d| + |cc| Limit: 5 ppm
NO_x : TCEQ Rule 117: |d| + |cc| Limit: 2 ppm

RA =

Calc. QA Performed by KJR 04/02/12

GOLDEN SPECIALTY

Relative Accuracy Hand Check Calculations

FACILITY:	Valero Houston	DATE:	3/22/12
SOURCE NAME:	SRU B	CITY, STATE:	Houston, TX
COMPOUND:	SO_2	UNITS:	~~SRU B~~ ~~SO_2~~ Alky

Relative Accuracy								
Test No.	Date	Time	Reference Sample (RM)	Analyzer Reading	Difference DIFF	No. of Sets	$t_{0.975}$ Values for No. of Sets	Difference Squared Diff²
1	3-22	1407	147.64	148.52	-0.88	1	NA	0.7744
2		1448	147.01	141.41	5.6	2	12.706	31.36
10 ~~4~~		1610	135.93 ~~136.03~~	140.75	~~-0.29~~ ~~0.55~~	3	4.303	6.5025
4 ~~5~~		1651	140.73	145.67	-5.32	4	3.182	28.3024
5 ~~6~~		1732	138.33	142.20	-4.94	5	2.776	24.4036
6 ~~7~~		1813	137.19	140.81	-3.87	6	2.571	14.9769
7 ~~8~~		1854	139.63	140.76	-3.62	7	2.447	13.1044
8 ~~9~~		1935	135.78	136.07	-1.13	8	2.365	1.2769
9 ~~10~~		2016	130.66	133.21	~~-0.55~~ -2.55	9	2.306	0.0941
						10	2.262	
						11	2.228	
						12	2.201	
		Avg. RM =	139.1556	SUM DIFF =	-17.0	Sum Diff² =		120.785

cc = confidence coefficient.
S_d = Standard Deviation.
AS = applicable standard.

Avg. RM = average reference method value.
|d| = absolute value of mean of the differences.
|cc| = absolute value of the confidence coefficient.

Diff = RM - Analyzer Reading

|d| = | SUM DIFF | / No. of Sets |d| = 1.8889

S_d = ([[Sum Diff²] - ([SUM DIFF]² / n)] / n-1)$^{1/2}$ S_d = 3.32930

cc = $t_{0.975}$ * [Sd / ($n^{1/2}$)] cc = 2.55912

Relative Accuracy versus Mean Reference Method Sample

RA = [(|d| + |cc|) / Avg. RM] * 100 =

RA = 3.196

Allowable Limits:
Limit: 10% - CO Limit: 20% - O_2 & CO_2
Limit: 20% - NO_x Limit: 20% - SO_2
Allowable Limits Acid Rain :
Limit: 10% - NO_x/O_2 System in lb/MMBtu

Relative Accuracy versus Applicable Standard

RA = [(|d| + |cc|) / applicable standard] * 100

RA = 1.7792

Allowable Limits:
Limit: 5% - CO Limit: 1% - O_2 & CO_2
Limit: 10% - NO_x Limit: 10% - SO_2
Allowable Limits Acid Rain :
Limit: 0.02 lb/MMBtu for sources with emissions of < 0.20 lb/MMBtu
PS 4A: |d| + |cc| Limit: 5 ppm
NO_x : TCEQ Rule 117: |d| + |cc| Limit: 2 ppm

Calc. QA Performed by KJK 04/02/12

APPENDIX D –
Field Data

9/30/94: FD1-1

FIELD DATA SHEET 1
Sampling and Velocity Traverse Points

Client/Plant Name Valero Hou Job # 12V02H170

City/State Houston, TX Date/Time 3/23/12

Test Location SRU B Nozz Personnel AL, BJ

Port I.D.			3"
Distance from Far Wall to Outside of Port			106 1/2"
Nipple Length and/or Wall Thickness			6"
Stack/Duct (✓) Blue Print ( ) Measured (✓)			
Depth/Diameter (> 12 in. ?)			100 1/2"
Width (if rectangular)			
Equiv. Diameter (if rect.) $D_e = 2\,D\,W/(D + W)$			
Area (A) (> 113 in.^{2} ?) $A = \pi D_2/4$ or $D\,W$			
	Distance	D_e	No. Pts*
Upstream ($\geq 2\,D_e$?)	75'		
Downstream ($\geq 0.5\,D_e$?)	100'		
Rectangular Matrix			

* *Circle larger of two.*

Pt.	% Duct Depth	Dist. from Inside Wall*	Dist. from Outside of Port
1	0.167	16 3/4	22 3/4
2	0.500	50 1/4	56 1/4
3	0.833	83 3/4	89 3/4
4			
5			
6			
7			
8			
9			
10			
11			
12			
13			
14			
15			
16			
17			
18			
19			
20			

* Do not place closer to stack walls than:
1.0 in. for stack dia. >24 in.
0.5 in. for stack dia. 12 to ≤24 in.

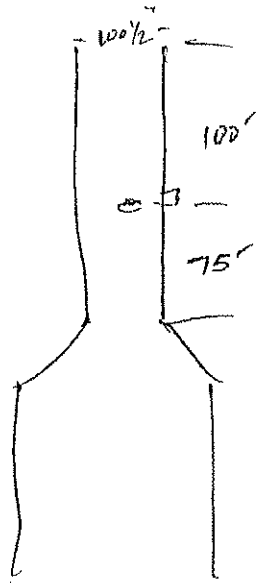

Sketch of Location: In the space above, sketch a flow diagram of the test location; show the distance from the ports to flow disturbances before and after. Sketch the cross-sectional area; show sampling port locations. In horizontal ducts, check for dust buildups and measure or estimate the depth.

QA/QC Check
Completeness ✓ Legibility ✓ Accuracy ✓ Specifications ✓ Reasonableness ✓

Checked by: _____ (Personnel Signature/Date) _____ (Team Leader Signature/Date)

GOLDEN SPECIALTY

Operating Discipline Checklist

Project ID: Valero Hon	Test Date: 3/23/12
Plant: SMU B RATA Source:	Team Members: DL, BJ
Description: 12VAHH10	Trailer Unit: T-10

	Item to Check	(Initials Required)
1	Checklist for GOLDEN Trailer Set-Up (Form #GSC-WP001-001)	DL
2	EPA Protocol 1 Gases Used	DL
3	Fully Redundant Sampling System System 1 ✓ System 2 SB	DL
4	Stratification Test Conducted an Documented Start time: Finish Time: File Name:	
5	Documentation of Probe Geometry and Location (Form #GSC-WP007-003)	
6	Measurement of Ambient Conditions: Barometer: 30.11 Rel.Humidity: 70% Temperature: 75°F	DL
7	Flanged Sample Probe or Port Closures	DL
8	Heated Sample Lines Set Temperature: 270°F Measured Temperature: 258°F	DL
9	Grounding and electrical requirements	DL
10	Data Exclusion Log (Form # GSC-WP007-002)	L
11	Staggered Calibrations	[illegible]
12	Data Storage and Formatting: Headers on and checked? ✓ Yes ___ No Data Logging ON? ✓ Yes ___ No	DL
13	Gas Conditioning System Temperature System 1: 4.1°C System 2: —	DL
14	Reasons for any exceptions:	

Signature of Person Recording Information:	[signature]	Date:	3/23/12
Approval of Client to Proceed with Testing:		Date:	

Form # GSC-WP007-004
REV 2010-01, EFF 11/1/10

GOLDEN SPECIALTY

FORM GSC-WP007-002
REV 2010-01, EFF 11/1/10

Data Exclusion Log

Project ID: 12VAH170	Test Dates From: 3/28/12	To:
Plant: Vmend Hwy	Trailer#: T-10	Analysts: M
Source: SMB RATA	Data for Filename:	
Description:		

Date	System #	Start Time	End Time	Reason
3/23/12		1331		start cal error
		1351		start system bias
		1407		start RA-1

REFERENCE METHOD
Analyzer Calibration Error

GOLDEN SPECIALTY

Project ID: Valero Hon Plant: Source: Stack B Data Description: 12VALN70	Test Date: 3/28/12	Analyst: DL
	Trailer Unit: 10	Analyzer System: 1
	Assigned Data:	

Component	Cylinder Number	Range	Analyzer Response System 1	Analyzer Response System 2	Actual Conc.	Cylinder Exp. Date
Oxides of Nitrogen	ALM038563	*High*			94.7 ppm	3/13
	CC53017	*Mid*			50.8 ppm	11/12
	N2	*Zero*			0 ppm	-
Nitrogen Dioxide	ALM015177	*n/a*			48.3 ppm	10/12
Carbon Monoxide	ALM008502	*High*			394 ppm	12/14
	ALM028603	*Mid*			197 ppm	5/14
	N2	*Zero*			0 ppm	-
Oxygen	ALM008502	*High*	20.03		20.0 %	12/14
	ALM028603	*Mid*	9.66		9.67%	5/14
	N2	*Zero*	-0.03		0 %	-
Total Hydrocarbons		*High*				
		Mid				
		Low				
		Zero				
Sulfur Dioxide	Diluted	*High*	207.9		208 ppm	11/12
	CC102531 (208)	*Mid*	100.3		100 ppm	11/12
	N2	*Zero*	0.0		0 ppm	-
Carbon Dioxide	ALM008502	*High*			19.1 %	12/14
	ALM028603	*Mid*			9.59 %	5/14
	N2	*Zero*			0 %	-

ANALYZER INFORMATION

Analyzer Type	SYSTEM #1 Model	SYSTEM #1 Serial #	SYSTEM #1 Range	SYSTEM #2 Model	SYSTEM #2 Serial #	SYSTEM #2 Range
NO_x	CAI 400	U02021	0 – 100 ppm	CAI 400	W08046-M	0 – 100 ppm
CO	Thermo 48i	0708021118	0 – 500 ppm	CAI 602P	W12010-MZ	0 – 500 ppm
O2	Servomex 1440	4034	0 – 25 %	CAI 602P	W12010-MZ	0 – 25 %
CO_2	Servomex 1440	4034	0 -20 %	CAI 602P	W12010-MZ	0 -20 %
SO_2	Teledyne 100EH	269	0 – 300 ppm			
VOC	VIG 200	4091009	0 – 100 ppm			

GOLDEN SPECIALTY

REFERENCE METHOD
Analyzer System Bias

Project ID: Plant:	Valero Hou	Test Date(s): 3/23/12	Analyst: DL
Source: Description:	SMU B Rata	Trailer Unit: T-10	Analyzer System: 1
	12WRH17D	Assigned Data:	

RUN NO: 1	Calibration Gas / Conc.	Pre Test Calibration ZERO	Pre Test Calibration SPAN	Post Test Calibration ZERO	Post Test Calibration SPAN	Bias <5% (Check)	**Response time (Zero & Span)
Date:	NO_x						sec
	CO						sec
Start Time:	O_2	-0.01	9.69	-0.04	9.66		37/37 sec
1407	CO_2						sec
End Time:	THC						sec
1428	SO_2	1.7	100.2	1.4	100.3		59/59 sec

RUN NO: 2	Calibration Gas / Conc.	Pre-Test Calibration ZERO	Pre-Test Calibration SPAN	Post Test Calibration ZERO	Post Test Calibration SPAN	Bias <5% (Check)	Drift <3% Of Span
Date:	NO_x						
	CO						
Start Time:	O_2			-0.05	9.65		
1448	CO_2						
End Time:	THC						
1509	SO_2			1.2	100.9		

RUN NO: 3	Calibration Gas / Conc.	Pre-Test Calibration ZERO	Pre-Test Calibration SPAN	Post Test Calibration ZERO	Post Test Calibration SPAN	Bias <5% (Check)	Drift <3% Of Span
Date:	NO_x						
	CO						
Start Time:	O_2			-0.05	9.65		
1529	CO_2						
End Time:	THC						
1550	SO_2			2.0	102.9		

RUN NO: 4	Calibration Gas / Conc.	Pre-Test Calibration ZERO	Pre-Test Calibration SPAN	Post Test Calibration ZERO	Post Test Calibration SPAN	Bias <5% (Check)	Drift <3% Of Span
Date:	NO_x						
	CO						
Start Time:	O_2			-0.04	9.64		
1610	CO_2						
End Time:	THC						
1631	SO_2			1.6	100.8		

RUN NO: 5	Calibration Gas / Conc.	Pre-Test Calibration ZERO	Pre-Test Calibration SPAN	Post Test Calibration ZERO	Post Test Calibration SPAN	Bias <5% (Check)	Drift <3% Of Span
Date:	NO_x						
	CO						
Start Time:	O_2			-0.04	9.66		
1651	CO_2						
End Time:	THC						
1712	SO_2			1.8	101.6		

Comments:

**Record response times for run 1 only for each component tested

Form # GSC-WP007-006
REV 2010-01, EFF 11/1/10

PAGE _____ of _____

GOLDEN SPECIALTY

REFERENCE METHOD
Analyzer System Bias

Project ID: Plant: VMEMO HOU		Test Date(s): 3/23/12	Analyst: DL
Source: Description: ENM B RATA		Trailer Unit: T-10	Analyzer System: 1
ILVAH170		Assigned Data:	

RUN NO: 6	Calibration Gas / Conc.	Pre-Test Calibration ZERO	Pre-Test Calibration SPAN	Post Test Calibration ZERO	Post Test Calibration SPAN	Bias <5% (Check)	**Response time (Zero & Span)
Date:	NO_x						sec
	CO						sec
Start Time: 1732	O_2			-0.03	9.66		sec
	CO_2						sec
End Time: 1753	THC						sec
	SO_2			0.9	100.1		sec

RUN NO: 7	Calibration Gas / Conc.	Pre-Test Calibration ZERO	Pre-Test Calibration SPAN	Post Test Calibration ZERO	Post Test Calibration SPAN	Bias <5% (Check)	Drift <3% Of Span
Date:	NO_x						
	CO						
Start Time: 1813	O_2			-0.04	9.67		
	CO_2						
End Time: 1834	THC						
	SO_2			0.4	99.6		

RUN NO: 8	Calibration Gas Conc.	Pre-Test Calibration ZERO	Pre-Test Calibration SPAN	Post Test Calibration ZERO	Post Test Calibration SPAN	Bias <5% (Check)	Drift <3% Of Span
Date:	NO_x						
	CO						
Start Time: 1854	O_2			-0.04	9.68		
	CO_2						
End Time: 1915	THC						
	SO_2			0.2	99.6		

RUN NO: 9	Calibration Gas / Conc.	Pre-Test Calibration ZERO	Pre-Test Calibration SPAN	Post Test Calibration ZERO	Post Test Calibration SPAN	Bias <5% (Che)	Drift <3% OfSpan
Date:	NO_x						
	CO						
Start Time: 1935	O_2			-0.03	9.68		
	CO_2						
End Time: 1956	THC						
	SO_2			0.0	99.7		

RUN NO: 10	Calibration Gas / Conc.	Pre-Test Calibration ZERO	Pre-Test Calibration SPAN	Post Test Calibration ZERO	Post Test Calibration SPAN	Bias <5% (Check)	Drift <3% Of Span
Date:	NO_x						
	CO						
Start Time: 2016	O_2			-0.04	9.68		
	CO_2						
End Time: 2037	THC						
	SO_2			-0.4	99.2		

Comments:

**Record response times for run 1 only for each component tested

Method 206 Validation

Gas Mixing System	Make/Model	Environics 4040	Serial No	3100	Range:	—
Reference Analyzer	Make/Model	Servomex	Serial No	0-25% O2	Range:	4054
High Concentration (%/ppm)	20.0% O2	Cylinder No.	AAL0015021	Expiration Date:		12/14
Mid Concentration (%/ppm)	9.67% O2	Cylinder No.	AAL0028603	Expiration Date:		5/14
Date:	3/21/12	Time				
Personnel:	JC					

Validation Data

Target Concentration	Run	Concentration (% or ppm)	Average
14.0 %	1	14.07	14.05
	2	14.03	
	3	14.04	
8.0 %	1	8.01	8.01
	2	8.01	
	3	8.00	

Mid-Gas Check

Target Concentration	Run	Concentration (% or ppm)	Average
9.67 %	1	9.68	9.68
	2	9.68	
	3	9.68	

APPENDIX E –
Reference Method Data

Valero Refining-Texas, L.P.
Houston Refinery
Houston, TX

One-Minute Reference Method Data
Trailer 10

SRU B Incinerator

Date (Adjusted)	Time	$O_{2\_}1$ System 1	$SO_{2\_}1$ System 1	Calibration Status
		%	ppm	
3/22/2012	13:31:00	-0.033	-0.03	
3/22/2012	13:32:00	-0.031	0.01	Calibrating System 1
3/22/2012	13:33:00	-0.035	56.54	Calibrating System 1
3/22/2012	13:34:00	-0.032	201.52	Calibrating System 1
3/22/2012	13:35:00	-0.036	207.59	Calibrating System 1
3/22/2012	13:36:00	-0.043	207.87	Calibrating System 1
3/22/2012	13:37:00	-0.043	147.53	Calibrating System 1
3/22/2012	13:38:00	-0.028	100.50	Calibrating System 1
3/22/2012	13:39:00	-0.026	100.28	Calibrating System 1
3/22/2012	13:40:00	15.854	35.51	
3/22/2012	13:41:00	20.024	2.57	Calibrating System 1
3/22/2012	13:42:00	20.029	-0.08	Calibrating System 1
3/22/2012	13:43:00	13.249	-0.02	Calibrating System 1
3/22/2012	13:44:00	9.663	-0.06	Calibrating System 1
3/22/2012	13:45:00	9.659	-0.04	Calibrating System 1
3/22/2012	13:46:00	6.522	-0.08	Calibrating System 1
3/22/2012	13:47:00	5.467	25.48	Calibrating System 1
3/22/2012	13:48:00	5.366	68.51	Calibrating System 1
3/22/2012	13:49:00	5.639	81.03	Calibrating System 1
3/22/2012	13:50:00	-0.061	15.06	Calibrating System 1
3/22/2012	13:51:00	-0.036	6.97	Calibrating System 1
3/22/2012	13:52:00	-0.001	4.95	Calibrating System 1
3/22/2012	13:53:00	-0.009	3.45	Calibrating System 1
3/22/2012	13:54:00	2.094	4.62	
3/22/2012	13:55:00	9.457	2.43	Calibrating System 1
3/22/2012	13:56:00	9.499	2.00	Calibrating System 1
3/22/2012	13:57:00	9.653	2.28	Calibrating System 1
3/22/2012	13:58:00	9.690	1.73	Calibrating System 1
3/22/2012	13:59:00	7.353	8.41	
3/22/2012	14:00:00	0.009	86.73	Calibrating System 1
3/22/2012	14:01:00	-0.012	99.51	Calibrating System 1
3/22/2012	14:02:00	-0.016	100.31	Calibrating System 1
3/22/2012	14:03:00	-0.020	100.23	Calibrating System 1
3/22/2012	14:04:00	1.641	105.49	
3/22/2012	14:05:00	5.001	111.28	
3/22/2012	14:06:00	5.067	120.90	
3/22/2012	14:07:00	5.121	117.67	
3/22/2012	14:08:00	5.124	117.67	
3/22/2012	14:09:00	5.242	115.20	
3/22/2012	14:10:00	5.245	113.99	
3/22/2012	14:11:00	5.256	113.68	
3/22/2012	14:12:00	5.242	112.73	
3/22/2012	14:13:00	5.317	110.96	
3/22/2012	14:14:00	5.301	110.67	
3/22/2012	14:15:00	5.422	109.90	
3/22/2012	14:16:00	5.376	109.76	
3/22/2012	14:17:00	5.344	109.80	
3/22/2012	14:18:00	5.309	110.00	
3/22/2012	14:19:00	5.293	109.91	
3/22/2012	14:20:00	5.347	108.63	
3/22/2012	14:21:00	5.364	109.12	
3/22/2012	14:22:00	5.376	108.70	
3/22/2012	14:23:00	5.397	106.88	
3/22/2012	14:24:00	5.446	106.46	
3/22/2012	14:25:00	5.362	106.17	
3/22/2012	14:26:00	5.253	107.30	
3/22/2012	14:27:00	5.230	108.47	
3/22/2012	14:28:00	5.219	108.31	
3/22/2012	14:29:00	5.246	107.80	
3/22/2012	14:30:00	5.290	108.34	
3/22/2012	14:31:00	1.130	51.53	
3/22/2012	14:32:00	0.032	7.36	Calibrating System 1
3/22/2012	14:33:00	-0.038	4.50	Calibrating System 1
3/22/2012	14:34:00	-0.042	3.41	Calibrating System 1
3/22/2012	14:35:00	-0.045	2.90	Calibrating System 1

Valero Refining-Texas, L.P.
Houston Refinery
Houston, TX

One-Minute Reference Method Data
Trailer 10

SRU B Incinerator

Date (Adjusted)	Time	O_2_1 System 1	SO_2_1 System 1	Calibration Status
		%	ppm	
3/22/2012	14:36:00	6.959	4.43	
3/22/2012	14:37:00	9.645	2.58	Calibrating System 1
3/22/2012	14:38:00	9.654	2.45	Calibrating System 1
3/22/2012	14:39:00	9.655	1.85	Calibrating System 1
3/22/2012	14:40:00	9.658	1.41	Calibrating System 1
3/22/2012	14:41:00	2.485	56.45	
3/22/2012	14:42:00	-0.021	99.52	Calibrating System 1
3/22/2012	14:43:00	-0.030	101.38	Calibrating System 1
3/22/2012	14:44:00	-0.036	100.52	Calibrating System 1
3/22/2012	14:45:00	-0.041	100.30	Calibrating System 1
3/22/2012	14:46:00	4.183	111.53	
3/22/2012	14:47:00	5.168	112.51	
3/22/2012	14:48:00	5.259	111.65	
3/22/2012	14:49:00	5.184	111.55	
3/22/2012	14:50:00	5.254	111.32	
3/22/2012	14:51:00	5.321	110.49	
3/22/2012	14:52:00	5.289	110.71	
3/22/2012	14:53:00	5.427	110.74	
3/22/2012	14:54:00	5.307	110.49	
3/22/2012	14:55:00	5.427	109.66	
3/22/2012	14:56:00	5.374	109.10	
3/22/2012	14:57:00	5.255	110.41	
3/22/2012	14:58:00	5.228	111.13	
3/22/2012	14:59:00	5.234	112.26	
3/22/2012	15:00:00	5.312	111.69	
3/22/2012	15:01:00	5.394	110.09	
3/22/2012	15:02:00	5.405	109.57	
3/22/2012	15:03:00	5.284	109.68	
3/22/2012	15:04:00	5.360	109.15	
3/22/2012	15:05:00	5.309	108.67	
3/22/2012	15:06:00	5.449	109.25	
3/22/2012	15:07:00	5.463	106.63	
3/22/2012	15:08:00	5.417	106.58	
3/22/2012	15:09:00	5.389	106.71	
3/22/2012	15:10:00	5.369	106.89	
3/22/2012	15:11:00	5.392	107.32	
3/22/2012	15:12:00	1.194	47.72	
3/22/2012	15:13:00	-0.039	5.93	Calibrating System 1
3/22/2012	15:14:00	-0.044	4.25	Calibrating System 1
3/22/2012	15:15:00	-0.045	3.78	Calibrating System 1
3/22/2012	15:16:00	-0.045	4.19	Calibrating System 1
3/22/2012	15:17:00	6.996	5.05	
3/22/2012	15:18:00	9.635	1.86	Calibrating System 1
3/22/2012	15:19:00	9.644	1.43	Calibrating System 1
3/22/2012	15:20:00	9.647	1.19	Calibrating System 1
3/22/2012	15:21:00	9.650	1.20	Calibrating System 1
3/22/2012	15:22:00	2.469	57.92	
3/22/2012	15:23:00	-0.027	100.08	Calibrating System 1
3/22/2012	15:24:00	-0.037	100.38	Calibrating System 1
3/22/2012	15:25:00	-0.043	100.28	Calibrating System 1
3/22/2012	15:26:00	-0.044	100.29	Calibrating System 1
3/22/2012	15:27:00	4.360	100.90	
3/22/2012	15:28:00	5.402	105.05	
3/22/2012	15:29:00	5.423	103.95	
3/22/2012	15:30:00	5.366	104.23	
3/22/2012	15:31:00	5.253	104.37	
3/22/2012	15:32:00	5.233	105.06	
3/22/2012	15:33:00	5.178	106.17	
3/22/2012	15:34:00	5.219	105.51	
3/22/2012	15:35:00	5.203	105.16	
3/22/2012	15:36:00	5.264	104.88	
3/22/2012	15:37:00	5.308	105.14	
3/22/2012	15:38:00	5.329	104.26	
3/22/2012	15:39:00	5.299	104.55	
3/22/2012	15:40:00	5.410	103.93	

Valero Refining-Texas, L.P.
Houston Refinery
Houston, TX

One-Minute Reference Method Data
Trailer 10

SRU B Incinerator

Date (Adjusted)	Time	O_2_1	SO_2_1	Calibration Status
		System 1		
		%	ppm	
3/22/2012	15:41:00	5.341	103.26	
3/22/2012	15:42:00	5.301	104.46	
3/22/2012	15:43:00	5.264	105.03	
3/22/2012	15:44:00	5.300	105.45	
3/22/2012	15:45:00	5.286	105.85	
3/22/2012	15:46:00	5.392	105.22	
3/22/2012	15:47:00	5.417	105.24	
3/22/2012	15:48:00	5.520	104.43	
3/22/2012	15:49:00	5.448	104.50	
3/22/2012	15:50:00	5.454	104.63	
3/22/2012	15:51:00	5.431	105.37	
3/22/2012	15:52:00	5.438	104.48	
3/22/2012	15:53:00	1.259	47.13	
3/22/2012	15:54:00	-0.039	6.74	Calibrating System 1
3/22/2012	15:55:00	-0.041	7.19	Calibrating System 1
3/22/2012	15:56:00	-0.045	7.41	Calibrating System 1
3/22/2012	15:57:00	-0.049	5.70	Calibrating System 1
3/22/2012	15:58:00	6.953	4.69	
3/22/2012	15:59:00	9.629	1.97	Calibrating System 1
3/22/2012	16:00:00	9.640	3.48	
3/22/2012	16:01:00	9.646	5.15	
3/22/2012	16:02:00	9.647	4.12	
3/22/2012	16:03:00	2.489	56.32	
3/22/2012	16:04:00	-0.030	98.91	Calibrating System 1
3/22/2012	16:05:00	-0.036	100.89	Calibrating System 1
3/22/2012	16:06:00	-0.040	102.92	Calibrating System 1
3/22/2012	16:07:00	-0.043	103.29	Calibrating System 1
3/22/2012	16:08:00	4.222	103.32	
3/22/2012	16:09:00	5.232	103.42	
3/22/2012	16:10:00	5.242	103.21	
3/22/2012	16:11:00	5.245	103.11	
3/22/2012	16:12:00	5.314	102.22	
3/22/2012	16:13:00	5.229	102.45	
3/22/2012	16:14:00	5.215	103.16	
3/22/2012	16:15:00	5.208	102.39	
3/22/2012	16:16:00	5.188	105.67	
3/22/2012	16:17:00	5.225	102.26	
3/22/2012	16:18:00	5.187	102.57	
3/22/2012	16:19:00	5.181	103.37	
3/22/2012	16:20:00	5.221	102.20	
3/22/2012	16:21:00	5.319	101.59	
3/22/2012	16:22:00	5.261	101.47	
3/22/2012	16:23:00	5.251	104.89	
3/22/2012	16:24:00	5.324	102.66	
3/22/2012	16:25:00	5.377	102.56	
3/22/2012	16:26:00	5.360	103.01	
3/22/2012	16:27:00	5.367	102.32	
3/22/2012	16:28:00	5.290	103.06	
3/22/2012	16:29:00	5.390	102.61	
3/22/2012	16:30:00	5.296	103.04	
3/22/2012	16:31:00	5.339	103.67	
3/22/2012	16:32:00	5.353	103.10	
3/22/2012	16:33:00	5.413	103.21	
3/22/2012	16:34:00	1.332	46.80	
3/22/2012	16:35:00	-0.037	7.11	Calibrating System 1
3/22/2012	16:36:00	-0.044	4.94	Calibrating System 1
3/22/2012	16:37:00	-0.045	4.51	Calibrating System 1
3/22/2012	16:38:00	-0.044	5.79	Calibrating System 1
3/22/2012	16:39:00	6.927	6.82	
3/22/2012	16:40:00	9.631	3.83	
3/22/2012	16:41:00	9.640	2.31	Calibrating System 1
3/22/2012	16:42:00	9.644	1.62	Calibrating System 1
3/22/2012	16:43:00	9.648	1.97	Calibrating System 1
3/22/2012	16:44:00	2.584	57.62	
3/22/2012	16:45:00	-0.024	100.68	Calibrating System 1

Valero Refining-Texas, L.P.
Houston Refinery
Houston, TX

One-Minute Reference Method Data
Trailer 10

SRU B Incinerator

Date (Adjusted)	Time	O_2_1	SO_2_1	Calibration Status
		System 1		
		%	ppm	
3/22/2012	16:46:00	-0.036	100.41	Calibrating System 1
3/22/2012	16:47:00	-0.041	100.22	Calibrating System 1
3/22/2012	16:48:00	-0.041	100.81	Calibrating System 1
3/22/2012	16:49:00	4.216	99.99	
3/22/2012	16:50:00	5.287	106.99	
3/22/2012	16:51:00	5.279	106.61	
3/22/2012	16:52:00	5.350	106.39	
3/22/2012	16:53:00	5.304	106.64	
3/22/2012	16:54:00	5.407	106.69	
3/22/2012	16:55:00	5.379	106.75	
3/22/2012	16:56:00	5.487	105.54	
3/22/2012	16:57:00	5.446	105.83	
3/22/2012	16:58:00	5.396	106.08	
3/22/2012	16:59:00	5.324	106.79	
3/22/2012	17:00:00	5.363	105.74	
3/22/2012	17:01:00	5.315	106.34	
3/22/2012	17:02:00	5.441	105.01	
3/22/2012	17:03:00	5.314	105.94	
3/22/2012	17:04:00	5.395	105.83	
3/22/2012	17:05:00	5.305	106.03	
3/22/2012	17:06:00	5.337	105.84	
3/22/2012	17:07:00	5.487	104.44	
3/22/2012	17:08:00	5.404	103.40	
3/22/2012	17:09:00	5.469	103.21	
3/22/2012	17:10:00	5.470	103.42	
3/22/2012	17:11:00	5.464	103.40	
3/22/2012	17:12:00	5.431	103.71	
3/22/2012	17:13:00	5.451	104.11	
3/22/2012	17:14:00	5.453	103.77	
3/22/2012	17:15:00	2.002	54.76	
3/22/2012	17:16:00	-0.029	7.58	Calibrating System 1
3/22/2012	17:17:00	-0.035	6.41	Calibrating System 1
3/22/2012	17:18:00	-0.039	4.59	Calibrating System 1
3/22/2012	17:19:00	-0.042	3.48	Calibrating System 1
3/22/2012	17:20:00	5.978	3.81	
3/22/2012	17:21:00	9.641	1.81	Calibrating System 1
3/22/2012	17:22:00	9.652	3.23	
3/22/2012	17:23:00	9.658	2.88	Calibrating System 1
3/22/2012	17:24:00	9.658	1.60	Calibrating System 1
3/22/2012	17:25:00	3.435	43.83	
3/22/2012	17:26:00	-0.019	97.77	Calibrating System 1
3/22/2012	17:27:00	-0.025	101.12	Calibrating System 1
3/22/2012	17:28:00	-0.026	101.64	Calibrating System 1
3/22/2012	17:29:00	-0.034	100.30	Calibrating System 1
3/22/2012	17:30:00	3.605	102.72	
3/22/2012	17:31:00	5.354	106.26	
3/22/2012	17:32:00	5.281	105.80	
3/22/2012	17:33:00	5.257	106.20	
3/22/2012	17:34:00	5.251	106.00	
3/22/2012	17:35:00	5.258	106.18	
3/22/2012	17:36:00	5.259	106.16	
3/22/2012	17:37:00	5.330	105.47	
3/22/2012	17:38:00	5.308	105.55	
3/22/2012	17:39:00	5.306	104.40	
3/22/2012	17:40:00	5.288	105.29	
3/22/2012	17:41:00	5.358	104.33	
3/22/2012	17:42:00	5.349	102.92	
3/22/2012	17:43:00	5.305	104.22	
3/22/2012	17:44:00	5.360	104.14	
3/22/2012	17:45:00	5.320	102.71	
3/22/2012	17:46:00	5.295	102.67	
3/22/2012	17:47:00	5.313	102.56	
3/22/2012	17:48:00	5.359	101.79	
3/22/2012	17:49:00	5.289	102.08	
3/22/2012	17:50:00	5.254	102.77	

Valero Refining-Texas, L.P.
Houston Refinery
Houston, TX

One-Minute Reference Method Data
Trailer 10

SRU B Incinerator

Date (Adjusted)	Time	O_2_1	SO_2_1	Calibration Status
		System 1		
		%	ppm	
3/22/2012	17:51:00	5.294	102.23	
3/22/2012	17:52:00	5.286	102.70	
3/22/2012	17:53:00	5.416	101.51	
3/22/2012	17:54:00	5.373	104.58	
3/22/2012	17:55:00	5.429	102.64	
3/22/2012	17:56:00	1.507	44.28	
3/22/2012	17:57:00	-0.030	4.48	Calibrating System 1
3/22/2012	17:58:00	-0.034	2.97	Calibrating System 1
3/22/2012	17:59:00	-0.032	3.64	Calibrating System 1
3/22/2012	18:00:00	-0.034	4.34	Calibrating System 1
3/22/2012	18:01:00	6.632	4.11	
3/22/2012	18:02:00	9.647	1.03	Calibrating System 1
3/22/2012	18:03:00	9.657	0.66	Calibrating System 1
3/22/2012	18:04:00	9.664	0.91	Calibrating System 1
3/22/2012	18:05:00	9.667	1.68	Calibrating System 1
3/22/2012	18:06:00	2.669	53.68	
3/22/2012	18:07:00	-0.017	98.09	Calibrating System 1
3/22/2012	18:08:00	-0.029	99.46	Calibrating System 1
3/22/2012	18:09:00	-0.032	99.70	Calibrating System 1
3/22/2012	18:10:00	-0.031	100.44	Calibrating System 1
3/22/2012	18:11:00	4.160	100.11	
3/22/2012	18:12:00	5.312	103.66	
3/22/2012	18:13:00	5.312	102.89	
3/22/2012	18:14:00	5.371	102.53	
3/22/2012	18:15:00	5.302	103.14	
3/22/2012	18:16:00	5.253	103.77	
3/22/2012	18:17:00	5.354	102.89	
3/22/2012	18:18:00	5.289	103.07	
3/22/2012	18:19:00	5.351	103.10	
3/22/2012	18:20:00	5.320	102.95	
3/22/2012	18:21:00	5.336	102.28	
3/22/2012	18:22:00	5.274	102.07	
3/22/2012	18:23:00	5.272	101.63	
3/22/2012	18:24:00	5.350	101.53	
3/22/2012	18:25:00	5.335	101.24	
3/22/2012	18:26:00	5.342	101.15	
3/22/2012	18:27:00	5.358	100.89	
3/22/2012	18:28:00	5.354	100.98	
3/22/2012	18:29:00	5.345	100.72	
3/22/2012	18:30:00	5.278	101.56	
3/22/2012	18:31:00	5.307	101.32	
3/22/2012	18:32:00	5.403	100.81	
3/22/2012	18:33:00	5.339	101.74	
3/22/2012	18:34:00	5.341	101.22	
3/22/2012	18:35:00	5.364	101.20	
3/22/2012	18:36:00	5.336	101.68	
3/22/2012	18:37:00	1.553	44.49	
3/22/2012	18:38:00	-0.026	4.78	Calibrating System 1
3/22/2012	18:39:00	-0.033	2.56	Calibrating System 1
3/22/2012	18:40:00	-0.038	1.67	Calibrating System 1
3/22/2012	18:41:00	-0.038	1.56	Calibrating System 1
3/22/2012	18:42:00	6.767	3.14	
3/22/2012	18:43:00	9.654	1.61	Calibrating System 1
3/22/2012	18:44:00	9.662	1.10	Calibrating System 1
3/22/2012	18:45:00	9.668	0.44	Calibrating System 1
3/22/2012	18:46:00	9.669	0.13	Calibrating System 1
3/22/2012	18:47:00	2.691	51.70	
3/22/2012	18:48:00	-0.011	98.32	Calibrating System 1
3/22/2012	18:49:00	-0.024	99.78	Calibrating System 1
3/22/2012	18:50:00	-0.031	99.41	Calibrating System 1
3/22/2012	18:51:00	-0.035	99.56	Calibrating System 1
3/22/2012	18:52:00	4.092	94.96	
3/22/2012	18:53:00	5.271	106.52	
3/22/2012	18:54:00	5.271	105.74	
3/22/2012	18:55:00	5.217	105.63	

Valero Refining-Texas, L.P.
Houston Refinery
Houston, TX

One-Minute Reference Method Data
Trailer 10

SRU B Incinerator

Date (Adjusted)	Time	O_2_1 System 1	SO_2_1 System 1	Calibration Status
		%	ppm	
3/22/2012	18:56:00	5.234	106.05	
3/22/2012	18:57:00	5.288	106.19	
3/22/2012	18:58:00	5.367	105.11	
3/22/2012	18:59:00	5.290	105.72	
3/22/2012	19:00:00	5.274	105.76	
3/22/2012	19:01:00	5.338	104.29	
3/22/2012	19:02:00	5.328	104.16	
3/22/2012	19:03:00	5.330	103.13	
3/22/2012	19:04:00	5.214	103.91	
3/22/2012	19:05:00	5.210	104.26	
3/22/2012	19:06:00	5.244	103.97	
3/22/2012	19:07:00	5.259	103.57	
3/22/2012	19:08:00	5.290	103.70	
3/22/2012	19:09:00	5.307	102.51	
3/22/2012	19:10:00	5.358	102.47	
3/22/2012	19:11:00	5.352	101.60	
3/22/2012	19:12:00	5.322	102.10	
3/22/2012	19:13:00	5.301	101.09	
3/22/2012	19:14:00	5.247	101.83	
3/22/2012	19:15:00	5.302	101.96	
3/22/2012	19:16:00	5.284	101.56	
3/22/2012	19:17:00	5.195	102.66	
3/22/2012	19:18:00	1.607	44.88	
3/22/2012	19:19:00	-0.027	4.01	Calibrating System 1
3/22/2012	19:20:00	-0.029	2.91	Calibrating System 1
3/22/2012	19:21:00	-0.033	1.89	Calibrating System 1
3/22/2012	19:22:00	-0.037	1.34	Calibrating System 1
3/22/2012	19:23:00	6.740	2.21	Calibrating System 1
3/22/2012	19:24:00	9.659	0.01	Calibrating System 1
3/22/2012	19:25:00	9.670	0.51	Calibrating System 1
3/22/2012	19:26:00	9.677	0.73	Calibrating System 1
3/22/2012	19:27:00	9.679	0.24	Calibrating System 1
3/22/2012	19:28:00	2.699	50.81	
3/22/2012	19:29:00	-0.015	97.59	Calibrating System 1
3/22/2012	19:30:00	-0.021	99.16	Calibrating System 1
3/22/2012	19:31:00	-0.024	100.35	Calibrating System 1
3/22/2012	19:32:00	-0.032	99.61	Calibrating System 1
3/22/2012	19:33:00	4.140	110.06	
3/22/2012	19:34:00	5.339	102.05	
3/22/2012	19:35:00	5.279	101.59	
3/22/2012	19:36:00	5.278	101.24	
3/22/2012	19:37:00	5.342	101.06	
3/22/2012	19:38:00	5.193	101.71	
3/22/2012	19:39:00	5.241	101.20	
3/22/2012	19:40:00	5.175	102.34	
3/22/2012	19:41:00	5.136	102.36	
3/22/2012	19:42:00	5.233	101.56	
3/22/2012	19:43:00	5.272	100.98	
3/22/2012	19:44:00	5.280	100.88	
3/22/2012	19:45:00	5.329	100.37	
3/22/2012	19:46:00	5.311	100.97	
3/22/2012	19:47:00	5.330	100.71	
3/22/2012	19:48:00	5.329	100.32	
3/22/2012	19:49:00	5.346	100.75	
3/22/2012	19:50:00	5.442	100.15	
3/22/2012	19:51:00	5.382	100.08	
3/22/2012	19:52:00	5.377	100.64	
3/22/2012	19:53:00	5.333	100.85	
3/22/2012	19:54:00	5.424	100.38	
3/22/2012	19:55:00	5.336	99.85	
3/22/2012	19:56:00	5.315	100.39	
3/22/2012	19:57:00	5.252	100.75	
3/22/2012	19:58:00	5.336	100.38	
3/22/2012	19:59:00	1.548	43.02	
3/22/2012	20:00:00	-0.030	3.88	Calibrating System 1

Valero Refining-Texas, L.P.
Houston Refinery
Houston, TX

One-Minute Reference Method Data
Trailer 10

SRU B Incinerator

Date (Adjusted)	Time	O_2_1	SO_2_1	Calibration Status
		System 1		
		%	ppm	
3/22/2012	20:01:00	-0.032	1.71	Calibrating System 1
3/22/2012	20:02:00	-0.032	1.46	Calibrating System 1
3/22/2012	20:03:00	-0.033	1.57	Calibrating System 1
3/22/2012	20:04:00	6.787	2.45	Calibrating System 1
3/22/2012	20:05:00	9.661	0.19	Calibrating System 1
3/22/2012	20:06:00	9.672	-0.15	Calibrating System 1
3/22/2012	20:07:00	9.677	-0.02	Calibrating System 1
3/22/2012	20:08:00	9.683	0.36	Calibrating System 1
3/22/2012	20:09:00	2.661	50.32	
3/22/2012	20:10:00	-0.018	97.14	Calibrating System 1
3/22/2012	20:11:00	-0.030	98.57	Calibrating System 1
3/22/2012	20:12:00	-0.033	99.24	Calibrating System 1
3/22/2012	20:13:00	-0.030	99.68	Calibrating System 1
3/22/2012	20:14:00	4.154	103.91	
3/22/2012	20:15:00	5.425	97.72	
3/22/2012	20:16:00	5.426	96.56	
3/22/2012	20:17:00	5.412	96.86	
3/22/2012	20:18:00	5.466	97.42	
3/22/2012	20:19:00	5.359	97.19	
3/22/2012	20:20:00	5.410	96.97	
3/22/2012	20:21:00	5.301	97.11	
3/22/2012	20:22:00	5.307	96.85	
3/22/2012	20:23:00	5.320	96.93	
3/22/2012	20:24:00	5.390	95.84	
3/22/2012	20:25:00	5.324	96.62	
3/22/2012	20:26:00	5.421	96.55	
3/22/2012	20:27:00	5.335	95.64	
3/22/2012	20:28:00	5.339	96.73	
3/22/2012	20:29:00	5.214	97.16	
3/22/2012	20:30:00	5.303	96.97	
3/22/2012	20:31:00	5.322	95.90	
3/22/2012	20:32:00	5.366	95.82	
3/22/2012	20:33:00	5.250	96.20	
3/22/2012	20:34:00	5.343	95.72	
3/22/2012	20:35:00	5.253	96.34	
3/22/2012	20:36:00	5.304	95.96	
3/22/2012	20:37:00	5.292	99.97	
3/22/2012	20:38:00	5.333	95.78	
3/22/2012	20:39:00	5.372	93.57	
3/22/2012	20:40:00	1.566	41.25	
3/22/2012	20:41:00	-0.026	3.44	Calibrating System 1
3/22/2012	20:42:00	-0.034	1.33	Calibrating System 1
3/22/2012	20:43:00	-0.037	0.78	Calibrating System 1
3/22/2012	20:44:00	-0.036	0.59	Calibrating System 1
3/22/2012	20:45:00	6.816	1.94	Calibrating System 1
3/22/2012	20:46:00	9.668	0.33	Calibrating System 1
3/22/2012	20:47:00	9.676	-0.14	Calibrating System 1
3/22/2012	20:48:00	9.681	-0.37	Calibrating System 1
3/22/2012	20:49:00	9.684	-0.36	Calibrating System 1
3/22/2012	20:50:00	2.750	49.95	
3/22/2012	20:51:00	-0.015	97.76	Calibrating System 1
3/22/2012	20:52:00	-0.030	98.94	Calibrating System 1
3/22/2012	20:53:00	-0.036	98.82	Calibrating System 1
3/22/2012	20:54:00	-0.038	99.15	Calibrating System 1
3/22/2012	20:55:00	4.127	107.34	

APPENDIX F – CEMS Data

Valero Refining-Texas, L.P.
Houston Refinery
Houston, TX

CEMS RUN DATA

SRU B Incinerator

Date/Time	O_2 (%)	SO_2 (ppm)	SO_2 (ppm, corrected)
22-Mar-12 14:07:00	4.97	113.4	148.8
22-Mar-12 14:08:00	4.99	113.4	149.0
22-Mar-12 14:09:00	5.06	112.1	147.9
22-Mar-12 14:10:00	5.10	111.2	147.1
22-Mar-12 14:11:00	5.14	111.4	147.8
22-Mar-12 14:12:00	5.15	111.9	148.5
22-Mar-12 14:13:00	5.17	113.7	151.0
22-Mar-12 14:14:00	5.21	112.9	150.3
22-Mar-12 14:15:00	5.24	111.8	149.2
22-Mar-12 14:16:00	5.30	109.9	147.3
22-Mar-12 14:17:00	5.32	109.4	146.7
22-Mar-12 14:18:00	5.30	111.5	149.4
22-Mar-12 14:19:00	5.28	112.5	150.4
22-Mar-12 14:20:00	5.24	113.5	151.5
22-Mar-12 14:21:00	5.24	113.9	152.0
22-Mar-12 14:22:00	5.25	112.4	150.2
22-Mar-12 14:23:00	5.23	110.9	148.0
22-Mar-12 14:24:00	5.25	109.3	145.9
22-Mar-12 14:25:00	5.25	109.9	146.8
22-Mar-12 14:26:00	5.23	108.9	145.3
22-Mar-12 14:27:00	5.17	109.8	145.9
Run 1 Average:	**5.19**	**111.6**	**148.5**

Date/Time	O_2 (%)	SO_2 (ppm)	SO_2 (ppm, corrected)
22-Mar-12 14:48:00	5.05	117.0	154.3
22-Mar-12 14:49:00	5.14	117.0	155.1
22-Mar-12 14:50:00	5.18	116.0	154.3
22-Mar-12 14:51:00	5.20	116.0	154.4
22-Mar-12 14:52:00	5.27	114.6	153.2
22-Mar-12 14:53:00	5.31	112.7	151.1
22-Mar-12 14:54:00	5.34	112.3	150.6
22-Mar-12 14:55:00	5.33	111.8	150.1
22-Mar-12 14:56:00	5.31	112.4	150.6
22-Mar-12 14:57:00	5.29	111.9	149.8
22-Mar-12 14:58:00	5.26	112.9	150.8
22-Mar-12 14:59:00	5.19	113.4	150.9
22-Mar-12 15:00:00	5.14	114.1	151.3
22-Mar-12 15:01:00	5.13	114.7	151.9
22-Mar-12 15:02:00	5.20	113.7	151.3
22-Mar-12 15:03:00	5.20	113.7	151.4
22-Mar-12 15:04:00	5.19	112.1	149.1
22-Mar-12 15:05:00	5.13	112.5	149.2
22-Mar-12 15:06:00	5.15	112.4	149.1
22-Mar-12 15:07:00	5.16	112.4	149.4
22-Mar-12 15:08:00	5.17	114.1	151.6
Run 2 Average:	**5.21**	**113.7**	**151.4**

Date/Time	O_2 (%)	SO_2 (ppm)	SO_2 (ppm, corrected)
22-Mar-12 15:29:00	5.34	108.1	154.3
22-Mar-12 15:30:00	5.34	106.2	155.1
22-Mar-12 15:31:00	5.32	105.9	154.3
22-Mar-12 15:32:00	5.22	106.4	154.4
22-Mar-12 15:33:00	5.20	107.2	153.2
22-Mar-12 15:34:00	5.12	109.2	151.1
22-Mar-12 15:35:00	5.08	108.8	150.8
22-Mar-12 15:36:00	5.09	109.6	150.1
22-Mar-12 15:37:00	5.14	109.6	150.6
22-Mar-12 15:38:00	5.14	109.3	149.8
22-Mar-12 15:39:00	5.22	107.7	150.8
22-Mar-12 15:40:00	5.21	106.8	150.9
22-Mar-12 15:41:00	5.22	105.9	151.3
22-Mar-12 15:42:00	5.20	106.9	151.9
22-Mar-12 15:43:00	5.11	107.5	151.3
22-Mar-12 15:44:00	5.12	107.9	151.4
22-Mar-12 15:45:00	5.14	108.2	149.1
22-Mar-12 15:46:00	5.16	108.7	149.2
22-Mar-12 15:47:00	5.16	108.8	149.1
22-Mar-12 15:48:00	5.23	109.3	149.4
22-Mar-12 15:49:00	5.27	108.8	151.6
Run 3 Average:	**5.19**	**107.9**	**151.4**

Date/Time	O_2 (%)	SO_2 (ppm)	SO_2 (ppm, corrected)
22-Mar-12 16:10:00	5.20	105.0	139.8
22-Mar-12 16:11:00	5.21	105.4	140.4
22-Mar-12 16:12:00	5.24	105.6	140.9
22-Mar-12 16:13:00	5.24	105.4	140.7
22-Mar-12 16:14:00	5.20	105.4	140.2
22-Mar-12 16:15:00	5.17	105.5	140.1
22-Mar-12 16:16:00	5.16	104.5	138.7
22-Mar-12 16:17:00	5.10	105.1	140.4
22-Mar-12 16:18:00	5.12	107.5	142.3
22-Mar-12 16:19:00	5.14	106.4	141.1
22-Mar-12 16:20:00	5.16	105.9	140.6
22-Mar-12 16:21:00	5.14	104.9	139.1
22-Mar-12 16:22:00	5.17	105.2	139.7
22-Mar-12 16:23:00	5.16	105.3	139.8
22-Mar-12 16:24:00	5.14	106.8	141.6
22-Mar-12 16:25:00	5.18	106.9	142.1
22-Mar-12 16:26:00	5.21	106.0	141.2
22-Mar-12 16:27:00	5.22	105.9	141.2
22-Mar-12 16:28:00	5.21	106.4	141.8
22-Mar-12 16:29:00	5.21	106.4	141.8
22-Mar-12 16:30:00	5.22	106.8	142.4
Run 4 Average:	**5.18**	**105.9**	**140.7**

Date/Time	O_2 (%)	SO_2 (ppm)	SO_2 (ppm, corrected)
22-Mar-12 16:51:00	5.22	108.6	145.1
22-Mar-12 16:52:00	5.20	107.6	143.5
22-Mar-12 16:53:00	5.19	108.6	144.5
22-Mar-12 16:54:00	5.22	109.2	145.5
22-Mar-12 16:55:00	5.25	110.2	147.2
22-Mar-12 16:56:00	5.26	110.4	147.7
22-Mar-12 16:57:00	5.27	109.2	146.1
22-Mar-12 16:58:00	5.29	108.7	145.6
22-Mar-12 16:59:00	5.27	108.8	145.5
22-Mar-12 17:00:00	5.20	109.0	145.1
22-Mar-12 17:01:00	5.17	110.7	147.1
22-Mar-12 17:02:00	5.16	109.6	145.6
22-Mar-12 17:03:00	5.18	109.6	145.6
22-Mar-12 17:04:00	5.13	110.6	146.5
22-Mar-12 17:05:00	5.15	110.3	146.4
22-Mar-12 17:06:00	5.16	110.3	146.6
22-Mar-12 17:07:00	5.17	110.8	147.2
22-Mar-12 17:08:00	5.21	109.9	146.4
22-Mar-12 17:09:00	5.20	108.4	144.3
22-Mar-12 17:10:00	5.20	108.2	144.0
22-Mar-12 17:11:00	5.23	107.8	143.8
Run 5 Average:	**5.21**	**109.4**	**145.7**

Date/Time	O_2 (%)	SO_2 (ppm)	SO_2 (ppm, corrected)
22-Mar-12 17:32:00	5.23	106.3	141.8
22-Mar-12 17:33:00	5.19	107.3	142.7
22-Mar-12 17:34:00	5.19	108.0	143.7
22-Mar-12 17:35:00	5.17	107.3	142.6
22-Mar-12 17:36:00	5.15	107.6	143.0
22-Mar-12 17:37:00	5.14	108.3	143.7
22-Mar-12 17:38:00	5.16	108.3	143.7
22-Mar-12 17:39:00	5.16	108.5	144.0
22-Mar-12 17:40:00	5.21	107.4	143.0
22-Mar-12 17:41:00	5.23	106.7	142.3
22-Mar-12 17:42:00	5.19	106.9	142.3
22-Mar-12 17:43:00	5.18	106.9	142.2
22-Mar-12 17:44:00	5.19	107.5	143.0
22-Mar-12 17:45:00	5.16	106.6	141.8
22-Mar-12 17:46:00	5.19	106.7	142.0
22-Mar-12 17:47:00	5.17	105.6	140.3
22-Mar-12 17:48:00	5.16	104.6	139.1
22-Mar-12 17:49:00	5.17	105.1	139.6
22-Mar-12 17:50:00	5.15	105.9	140.5
22-Mar-12 17:51:00	5.17	107.9	143.3
22-Mar-12 17:52:00	5.14	106.9	141.7
Run 6 Average:	**5.18**	**107.0**	**142.2**

Valero Refining-Texas, L.P.
Houston Refinery
Houston, TX

CEMS RUN DATA

SRU 8 Incinerator

Date/Time	O_2 (%)	SO_2 (ppm)	SO_2 (ppm, corrected)
22-Mar-12 18:13:00	5.15	105.9	140.6
22-Mar-12 18:14:00	5.13	106.1	140.6
22-Mar-12 18:15:00	5.18	105.1	139.7
22-Mar-12 18:16:00	5.19	105.5	140.4
22-Mar-12 18:17:00	5.19	106.8	142.0
22-Mar-12 18:18:00	5.15	106.9	141.9
22-Mar-12 18:19:00	5.18	106.5	141.7
22-Mar-12 18:20:00	5.16	106.8	141.8
22-Mar-12 18:21:00	5.18	107.4	142.8
22-Mar-12 18:22:00	5.18	106.6	141.8
22-Mar-12 18:23:00	5.13	106.4	141.1
22-Mar-12 18:24:00	5.15	105.4	139.8
22-Mar-12 18:25:00	5.13	106.4	141.0
22-Mar-12 18:26:00	5.19	105.8	140.7
22-Mar-12 18:27:00	5.15	106.1	140.8
22-Mar-12 18:28:00	5.17	105.8	140.6
22-Mar-12 18:29:00	5.20	104.5	139.1
22-Mar-12 18:30:00	5.18	105.2	139.8
22-Mar-12 18:31:00	5.11	105.1	139.1
22-Mar-12 18:32:00	5.13	105.9	140.3
22-Mar-12 18:33:00	5.16	106.5	141.4
Run 7 Average:	**5.16**	**106.0**	**140.8**

Date/Time	O_2 (%)	SO_2 (ppm)	SO_2 (ppm, corrected)
22-Mar-12 18:54:00	5.21	105.5	140.6
22-Mar-12 18:55:00	5.14	106.6	141.4
22-Mar-12 18:56:00	5.09	107.3	141.8
22-Mar-12 18:57:00	5.06	109.6	144.6
22-Mar-12 18:58:00	5.14	109.5	145.1
22-Mar-12 18:59:00	5.18	107.7	143.2
22-Mar-12 19:00:00	5.22	106.5	142.0
22-Mar-12 19:01:00	5.21	107.7	143.4
22-Mar-12 19:02:00	5.22	107.0	142.6
22-Mar-12 19:03:00	5.18	106.9	142.1
22-Mar-12 19:04:00	5.17	105.5	140.2
22-Mar-12 19:05:00	5.14	105.7	140.2
22-Mar-12 19:06:00	5.06	106.1	140.1
22-Mar-12 19:07:00	5.07	105.8	139.6
22-Mar-12 19:08:00	5.06	106.7	140.8
22-Mar-12 19:09:00	5.10	106.6	141.0
22-Mar-12 19:10:00	5.17	104.8	139.2
22-Mar-12 19:11:00	5.19	104.1	138.5
22-Mar-12 19:12:00	5.19	103.3	137.4
22-Mar-12 19:13:00	5.16	103.2	137.0
22-Mar-12 19:14:00	5.17	101.9	135.4
Run 8 Average:	**5.15**	**106.1**	**140.8**

Date/Time	O_2 (%)	SO_2 (ppm)	SO_2 (ppm, corrected)
22-Mar-12 19:35:00	5.17	102.6	136.3
22-Mar-12 19:36:00	5.12	103.2	136.5
22-Mar-12 19:37:00	5.11	102.9	136.2
22-Mar-12 19:38:00	5.08	102.1	134.9
22-Mar-12 19:39:00	5.03	102.2	134.5
22-Mar-12 19:40:00	5.00	103.1	135.5
22-Mar-12 19:41:00	4.97	103.6	136.2
22-Mar-12 19:42:00	4.96	104.1	136.5
22-Mar-12 19:43:00	4.99	104.1	136.8
22-Mar-12 19:44:00	5.05	103.9	137.0
22-Mar-12 19:45:00	5.11	103.6	137.1
22-Mar-12 19:46:00	5.10	103.5	136.9
22-Mar-12 19:47:00	5.12	103.9	137.5
22-Mar-12 19:48:00	5.15	102.6	136.1
22-Mar-12 19:49:00	5.13	103.0	136.5
22-Mar-12 19:50:00	5.16	102.9	136.6
22-Mar-12 19:51:00	5.15	102.5	136.1
22-Mar-12 19:52:00	5.23	101.2	135.0
22-Mar-12 19:53:00	5.23	100.3	133.8
22-Mar-12 19:54:00	5.15	102.3	135.7
22-Mar-12 19:55:00	5.12	102.4	135.6
Run 9 Average:	**5.10**	**102.9**	**136.1**

Date/Time	O_2 (%)	SO_2 (ppm)	SO_2 (ppm, corrected)
22-Mar-12 20:16:00	5.15	100.6	133.5
22-Mar-12 20:17:00	5.13	100.2	132.8
22-Mar-12 20:18:00	5.13	99.4	131.7
22-Mar-12 20:19:00	5.13	100.5	133.1
22-Mar-12 20:20:00	5.13	99.3	131.6
22-Mar-12 20:21:00	5.15	100.1	132.8
22-Mar-12 20:22:00	5.09	101.3	133.9
22-Mar-12 20:23:00	5.07	102.2	135.0
22-Mar-12 20:24:00	5.08	101.6	134.4
22-Mar-12 20:25:00	5.07	101.2	133.7
22-Mar-12 20:26:00	5.08	101.0	133.4
22-Mar-12 20:27:00	5.11	101.2	133.9
22-Mar-12 20:28:00	5.12	100.5	133.1
22-Mar-12 20:29:00	5.09	100.6	133.0
22-Mar-12 20:30:00	5.08	100.9	133.3
22-Mar-12 20:31:00	5.08	101.7	134.4
22-Mar-12 20:32:00	5.09	101.4	134.0
22-Mar-12 20:33:00	5.05	101.4	133.7
22-Mar-12 20:34:00	5.04	100.0	131.8
22-Mar-12 20:35:00	5.02	99.6	131.1
22-Mar-12 20:36:00	4.99	101.3	133.1
Run 10 Average:	**5.09**	**100.8**	**133.2**

Date/Time	O_2 (%)	SO_2 (ppm)	SO_2 (ppm, corrected)
Run 11 Average:			

Date/Time	O_2 (%)	SO_2 (ppm)	SO_2 (ppm, corrected)
Run 12 Average:			

Valero Refining-Texas, L.P.
Houston Refinery
Houston, TX

CEMS DATA

SRU B Incinerator

Date	Time	O_2	SO_2	SO_2 @ 0%O_2
		%	ppm	ppm
3/22/2012	13:30	5.19	108.8	144.7
3/22/2012	13:31	5.20	108.9	145.0
3/22/2012	13:32	5.22	110.2	146.8
3/22/2012	13:33	5.21	108.0	143.9
3/22/2012	13:34	5.15	108.2	143.6
3/22/2012	13:35	5.17	108.9	144.7
3/22/2012	13:36	5.19	109.2	145.2
3/22/2012	13:37	5.08	108.0	142.6
3/22/2012	13:38	5.04	109.8	144.6
3/22/2012	13:39	5.09	110.0	145.4
3/22/2012	13:40	5.14	109.3	145.0
3/22/2012	13:41	5.19	108.4	144.2
3/22/2012	13:42	5.24	109.2	145.7
3/22/2012	13:43	5.28	108.6	145.4
3/22/2012	13:44	5.24	109.0	145.5
3/22/2012	13:45	5.20	109.2	145.3
3/22/2012	13:46	5.22	109.4	145.8
3/22/2012	13:47	5.26	108.6	145.2
3/22/2012	13:48	5.26	109.7	146.6
3/22/2012	13:49	5.26	109.3	146.1
3/22/2012	13:50	5.29	109.8	147.0
3/22/2012	13:51	5.34	109.6	147.3
3/22/2012	13:52	5.32	108.8	146.0
3/22/2012	13:53	5.30	108.9	145.9
3/22/2012	13:54	5.34	109.8	147.5
3/22/2012	13:55	5.30	108.0	144.7
3/22/2012	13:56	5.30	109.9	147.3
3/22/2012	13:57	5.35	110.8	148.9
3/22/2012	13:58	5.33	109.4	146.9
3/22/2012	13:59	5.30	107.5	144.1
3/22/2012	14:00	5.29	108.4	145.1
3/22/2012	14:01	5.25	108.9	145.5
3/22/2012	14:02	5.12	110.6	146.6
3/22/2012	14:03	5.02	111.4	146.5
3/22/2012	14:04	4.97	111.9	146.7
3/22/2012	14:05	4.89	112.3	146.7
3/22/2012	14:06	4.91	113.6	148.4
3/22/2012	14:07	4.97	113.4	148.8
3/22/2012	14:08	4.99	113.4	149.0
3/22/2012	14:09	5.06	112.1	147.9
3/22/2012	14:10	5.10	111.2	147.1
3/22/2012	14:11	5.14	111.4	147.8
3/22/2012	14:12	5.15	111.9	148.5
3/22/2012	14:13	5.17	113.7	151.0
3/22/2012	14:14	5.21	112.9	150.3
3/22/2012	14:15	5.24	111.8	149.2
3/22/2012	14:16	5.30	109.9	147.3
3/22/2012	14:17	5.32	109.4	146.7
3/22/2012	14:18	5.30	111.5	149.4
3/22/2012	14:19	5.28	112.5	150.4
3/22/2012	14:20	5.24	113.5	151.5
3/22/2012	14:21	5.24	113.9	152.0
3/22/2012	14:22	5.25	112.4	150.2
3/22/2012	14:23	5.23	110.9	148.0
3/22/2012	14:24	5.25	109.3	145.9
3/22/2012	14:25	5.25	109.9	146.8
3/22/2012	14:26	5.23	108.9	145.3
3/22/2012	14:27	5.17	109.8	145.9

Valero Refining-Texas, L.P.
Houston Refinery
Houston, TX

CEMS DATA

SRU B Incinerator

Date	Time	O_2	SO_2	SO_2 @ 0%O_2
		%	ppm	ppm
3/22/2012	14:28	5.09	110.1	145.5
3/22/2012	14:29	5.09	110.4	145.9
3/22/2012	14:30	5.07	110.7	146.2
3/22/2012	14:31	5.08	110.8	146.3
3/22/2012	14:32	5.11	112.2	148.5
3/22/2012	14:33	5.09	111.4	147.2
3/22/2012	14:34	5.09	111.3	147.1
3/22/2012	14:35	5.17	110.0	146.2
3/22/2012	14:36	5.18	110.0	146.3
3/22/2012	14:37	5.20	110.0	146.4
3/22/2012	14:38	5.24	109.5	146.1
3/22/2012	14:39	5.35	109.4	147.0
3/22/2012	14:40	5.30	111.8	149.8
3/22/2012	14:41	5.22	109.2	145.6
3/22/2012	14:42	5.08	110.8	146.3
3/22/2012	14:43	5.08	112.1	148.1
3/22/2012	14:44	5.10	112.0	148.1
3/22/2012	14:45	5.03	113.1	149.0
3/22/2012	14:46	5.05	113.4	149.5
3/22/2012	14:47	5.02	113.7	149.6
3/22/2012	14:48	5.05	117.0	154.3
3/22/2012	14:49	5.14	117.0	155.1
3/22/2012	14:50	5.18	116.0	154.3
3/22/2012	14:51	5.20	116.0	154.4
3/22/2012	14:52	5.27	114.6	153.2
3/22/2012	14:53	5.31	112.7	151.1
3/22/2012	14:54	5.34	112.3	150.8
3/22/2012	14:55	5.33	111.8	150.1
3/22/2012	14:56	5.31	112.4	150.6
3/22/2012	14:57	5.29	111.9	149.8
3/22/2012	14:58	5.26	112.9	150.8
3/22/2012	14:59	5.19	113.4	150.9
3/22/2012	15:00	5.14	114.1	151.3
3/22/2012	15:01	5.13	114.7	151.9
3/22/2012	15:02	5.20	113.7	151.3
3/22/2012	15:03	5.20	113.7	151.4
3/22/2012	15:04	5.19	112.1	149.1
3/22/2012	15:05	5.13	112.5	149.2
3/22/2012	15:06	5.15	112.4	149.1
3/22/2012	15:07	5.18	112.4	149.4
3/22/2012	15:08	5.17	114.1	151.6
3/22/2012	15:09	5.23	113.7	151.6
3/22/2012	15:10	5.21	113.3	150.9
3/22/2012	15:11	5.17	112.1	148.9
3/22/2012	15:12	5.13	112.8	149.5
3/22/2012	15:13	5.12	111.3	147.4
3/22/2012	15:14	5.11	112.1	148.4
3/22/2012	15:15	5.11	112.1	148.4
3/22/2012	15:16	5.12	112.0	148.3
3/22/2012	15:17	5.15	110.3	146.4
3/22/2012	15:18	5.19	109.5	145.7
3/22/2012	15:19	5.14	109.7	145.5
3/22/2012	15:20	5.07	110.2	145.5
3/22/2012	15:21	5.06	110.2	145.4
3/22/2012	15:22	5.07	110.3	145.6
3/22/2012	15:23	5.00	111.4	146.4
3/22/2012	15:24	5.01	110.9	145.8
3/22/2012	15:25	5.09	110.6	146.2

Valero Refining-Texas, L.P.
Houston Refinery
Houston, TX

CEMS DATA

SRU B Incinerator

Date	Time	O_2	SO_2	SO_2 @ 0%O_2
		%	ppm	ppm
3/22/2012	15:26	5.14	109.5	145.2
3/22/2012	15:27	5.18	108.5	144.3
3/22/2012	15:28	5.29	108.1	144.7
3/22/2012	15:29	5.34	108.1	145.1
3/22/2012	15:30	5.34	106.2	142.6
3/22/2012	15:31	5.32	105.9	142.0
3/22/2012	15:32	5.22	106.4	141.8
3/22/2012	15:33	5.20	107.2	142.7
3/22/2012	15:34	5.12	109.2	144.6
3/22/2012	15:35	5.08	108.8	143.8
3/22/2012	15:36	5.09	109.6	144.9
3/22/2012	15:37	5.14	109.6	145.4
3/22/2012	15:38	5.14	109.3	144.9
3/22/2012	15:39	5.22	107.7	143.5
3/22/2012	15:40	5.21	106.8	142.4
3/22/2012	15:41	5.22	105.9	141.2
3/22/2012	15:42	5.20	106.9	142.3
3/22/2012	15:43	5.11	107.5	142.3
3/22/2012	15:44	5.12	107.9	142.9
3/22/2012	15:45	5.14	108.2	143.5
3/22/2012	15:46	5.16	108.7	144.3
3/22/2012	15:47	5.16	108.8	144.4
3/22/2012	15:48	5.23	109.3	145.7
3/22/2012	15:49	5.27	108.8	145.5
3/22/2012	15:50	5.25	108.4	144.8
3/22/2012	15:51	5.24	107.4	143.4
3/22/2012	15:52	5.27	107.8	144.2
3/22/2012	15:53	5.27	107.9	144.4
3/22/2012	15:54	5.27	106.8	142.8
3/22/2012	15:55	5.24	106.5	142.1
3/22/2012	15:56	5.22	107.8	143.7
3/22/2012	15:57	5.20	107.7	143.3
3/22/2012	15:58	5.13	108.1	143.3
3/22/2012	15:59	5.17	107.3	142.6
3/22/2012	16:00	5.17	107.4	142.7
3/22/2012	16:01	5.17	107.5	142.8
3/22/2012	16:02	5.17	107.0	142.1
3/22/2012	16:03	5.15	105.2	139.6
3/22/2012	16:04	5.12	105.5	139.7
3/22/2012	16:05	5.14	106.4	141.1
3/22/2012	16:06	5.08	107.4	141.9
3/22/2012	16:07	5.09	107.5	142.1
3/22/2012	16:08	5.13	106.4	141.0
3/22/2012	16:09	5.21	105.3	140.2
3/22/2012	16:10	5.20	105.0	139.8
3/22/2012	16:11	5.21	105.4	140.4
3/22/2012	16:12	5.24	105.6	140.9
3/22/2012	16:13	5.24	105.4	140.7
3/22/2012	16:14	5.20	105.4	140.2
3/22/2012	16:15	5.17	105.5	140.1
3/22/2012	16:16	5.16	104.5	138.7
3/22/2012	16:17	5.10	106.1	140.4
3/22/2012	16:18	5.12	107.5	142.3
3/22/2012	16:19	5.14	106.4	141.1
3/22/2012	16:20	5.16	105.9	140.6
3/22/2012	16:21	5.14	104.9	139.1
3/22/2012	16:22	5.17	105.2	139.7
3/22/2012	16:23	5.16	105.3	139.8

Valero Refining-Texas, L.P.
Houston Refinery
Houston, TX

CEMS DATA

SRU 8 Incinerator

Date	Time	O_2	SO_2	SO_2 @ 0%O_2
		%	ppm	ppm
3/22/2012	16:24	5.14	106.8	141.6
3/22/2012	16:25	5.18	106.9	142.1
3/22/2012	16:26	5.21	106.0	141.2
3/22/2012	16:27	5.22	105.9	141.2
3/22/2012	16:28	5.21	106.4	141.8
3/22/2012	16:29	5.21	106.4	141.8
3/22/2012	16:30	5.22	106.8	142.4
3/22/2012	16:31	5.26	107.0	143.0
3/22/2012	16:32	5.22	107.9	143.8
3/22/2012	16:33	5.21	106.9	142.4
3/22/2012	16:34	5.22	106.6	142.1
3/22/2012	16:35	5.22	108.5	144.6
3/22/2012	16:36	5.29	108.8	145.7
3/22/2012	16:37	5.31	108.2	145.0
3/22/2012	16:38	5.34	107.2	143.9
3/22/2012	16:39	5.32	106.3	142.6
3/22/2012	16:40	5.26	106.5	142.3
3/22/2012	16:41	5.14	106.5	141.2
3/22/2012	16:42	5.05	108.0	142.4
3/22/2012	16:43	5.07	109.2	144.2
3/22/2012	16:44	5.06	109.0	143.8
3/22/2012	16:45	5.09	108.7	143.7
3/22/2012	16:46	5.12	108.4	143.7
3/22/2012	16:47	5.13	108.7	144.1
3/22/2012	16:48	5.13	107.5	142.5
3/22/2012	16:49	5.19	109.2	145.3
3/22/2012	16:50	5.21	109.1	145.3
3/22/2012	16:51	5.22	108.8	145.1
3/22/2012	16:52	5.20	107.8	143.5
3/22/2012	16:53	5.19	108.6	144.5
3/22/2012	16:54	5.22	109.2	145.5
3/22/2012	16:55	5.25	110.2	147.2
3/22/2012	16:56	5.28	110.4	147.7
3/22/2012	16:57	5.27	109.2	146.1
3/22/2012	16:58	5.29	108.7	145.6
3/22/2012	16:59	5.27	108.8	145.5
3/22/2012	17:00	5.20	109.0	145.1
3/22/2012	17:01	5.17	110.7	147.1
3/22/2012	17:02	5.16	109.6	145.6
3/22/2012	17:03	5.18	109.6	145.6
3/22/2012	17:04	5.13	110.6	146.5
3/22/2012	17:05	5.15	110.3	146.4
3/22/2012	17:06	5.18	110.3	146.6
3/22/2012	17:07	5.17	110.8	147.2
3/22/2012	17:08	5.21	109.9	146.4
3/22/2012	17:09	5.20	108.4	144.3
3/22/2012	17:10	5.20	108.2	144.0
3/22/2012	17:11	5.23	107.8	143.8
3/22/2012	17:12	5.24	107.0	142.9
3/22/2012	17:13	5.22	108.4	144.5
3/22/2012	17:14	5.22	108.7	144.9
3/22/2012	17:15	5.21	108.9	145.1
3/22/2012	17:16	5.22	108.7	144.9
3/22/2012	17:17	5.25	107.4	143.4
3/22/2012	17:18	5.26	106.8	142.7
3/22/2012	17:19	5.27	107.3	143.4
3/22/2012	17:20	5.24	107.7	143.7
3/22/2012	17:21	5.20	109.1	145.3

Valero Refining-Texas, L.P.
Houston Refinery
Houston, TX

CEMS DATA

SRU B Incinerator

Date	Time	O_2	SO_2	SO_2 @ 0%O_2
		%	ppm	ppm
3/22/2012	17:22	5.20	108.8	144.9
3/22/2012	17:23	5.12	109.0	144.3
3/22/2012	17:24	5.08	109.2	144.3
3/22/2012	17:25	5.03	110.1	145.0
3/22/2012	17:26	5.04	112.0	147.6
3/22/2012	17:27	5.05	111.7	147.2
3/22/2012	17:28	5.13	110.5	146.3
3/22/2012	17:29	5.18	109.0	144.9
3/22/2012	17:30	5.17	110.0	146.1
3/22/2012	17:31	5.25	109.6	146.3
3/22/2012	17:32	5.23	106.3	141.8
3/22/2012	17:33	5.19	107.3	142.7
3/22/2012	17:34	5.19	108.0	143.7
3/22/2012	17:35	5.17	107.3	142.6
3/22/2012	17:36	5.15	107.8	143.0
3/22/2012	17:37	5.14	108.3	143.7
3/22/2012	17:38	5.16	108.3	143.7
3/22/2012	17:39	5.16	108.5	144.0
3/22/2012	17:40	5.21	107.4	143.0
3/22/2012	17:41	5.23	106.7	142.3
3/22/2012	17:42	5.19	106.9	142.3
3/22/2012	17:43	5.18	106.9	142.2
3/22/2012	17:44	5.19	107.5	143.0
3/22/2012	17:45	5.16	106.8	141.8
3/22/2012	17:46	5.19	106.7	142.0
3/22/2012	17:47	5.17	105.6	140.3
3/22/2012	17:48	5.16	104.8	139.1
3/22/2012	17:49	5.17	105.1	139.6
3/22/2012	17:50	5.15	105.9	140.5
3/22/2012	17:51	5.17	107.9	143.3
3/22/2012	17:52	5.14	106.9	141.7
3/22/2012	17:53	5.12	107.5	142.4
3/22/2012	17:54	5.22	106.5	141.9
3/22/2012	17:55	5.19	108.4	144.2
3/22/2012	17:56	5.20	109.1	145.2
3/22/2012	17:57	5.23	106.5	142.1
3/22/2012	17:58	5.22	104.8	139.7
3/22/2012	17:59	5.20	103.9	138.4
3/22/2012	18:00	5.24	104.3	139.2
3/22/2012	18:01	5.15	105.9	140.5
3/22/2012	18:02	5.11	105.6	139.9
3/22/2012	18:03	5.09	105.1	138.9
3/22/2012	18:04	5.14	104.6	138.7
3/22/2012	18:05	5.09	104.1	137.6
3/22/2012	18:06	5.04	106.0	139.7
3/22/2012	18:07	5.09	106.4	140.7
3/22/2012	18:08	5.09	105.1	138.9
3/22/2012	18:09	5.16	104.9	139.2
3/22/2012	18:10	5.12	104.9	139.0
3/22/2012	18:11	5.12	105.4	139.6
3/22/2012	18:12	5.15	105.2	139.6
3/22/2012	18:13	5.15	105.9	140.6
3/22/2012	18:14	5.13	106.1	140.6
3/22/2012	18:15	5.18	105.1	139.7
3/22/2012	18:16	5.19	105.5	140.4
3/22/2012	18:17	5.19	106.8	142.0
3/22/2012	18:18	5.15	106.9	141.9
3/22/2012	18:19	5.18	106.5	141.7

Valero Refining-Texas, L.P.
Houston Refinery
Houston, TX

CEMS DATA

SRU B Incinerator

Date	Time	O_2	SO_2	SO_2 @ 0%O_2
		%	ppm	ppm
3/22/2012	18:20	5.16	106.8	141.8
3/22/2012	18:21	5.18	107.4	142.8
3/22/2012	18:22	5.18	106.6	141.8
3/22/2012	18:23	5.13	106.4	141.1
3/22/2012	18:24	5.15	105.4	139.8
3/22/2012	18:25	5.13	106.4	141.0
3/22/2012	18:26	5.19	105.8	140.7
3/22/2012	18:27	5.15	106.1	140.8
3/22/2012	18:28	5.17	105.8	140.6
3/22/2012	18:29	5.20	104.5	139.1
3/22/2012	18:30	5.18	105.2	139.8
3/22/2012	18:31	5.11	105.1	139.1
3/22/2012	18:32	5.13	105.9	140.3
3/22/2012	18:33	5.16	106.5	141.4
3/22/2012	18:34	5.16	105.1	139.5
3/22/2012	18:35	5.16	105.4	139.9
3/22/2012	18:36	5.14	104.6	138.7
3/22/2012	18:37	5.13	105.3	139.5
3/22/2012	18:38	5.16	106.0	140.7
3/22/2012	18:39	5.18	106.4	141.4
3/22/2012	18:40	5.21	106.3	141.6
3/22/2012	18:41	5.23	105.8	141.0
3/22/2012	18:42	5.20	106.2	141.3
3/22/2012	18:43	5.12	108.6	143.7
3/22/2012	18:44	5.10	109.0	144.1
3/22/2012	18:45	5.11	109.0	144.2
3/22/2012	18:46	5.09	110.3	145.9
3/22/2012	18:47	5.08	108.4	143.2
3/22/2012	18:48	5.08	108.2	143.0
3/22/2012	18:49	5.11	108.6	143.7
3/22/2012	18:50	5.13	108.0	143.1
3/22/2012	18:51	5.20	106.8	142.2
3/22/2012	18:52	5.19	106.2	141.3
3/22/2012	18:53	5.22	105.7	140.9
3/22/2012	18:54	5.21	105.5	140.6
3/22/2012	18:55	5.14	106.6	141.4
3/22/2012	18:56	5.09	107.3	141.8
3/22/2012	18:57	5.06	109.6	144.6
3/22/2012	18:58	5.14	109.5	145.1
3/22/2012	18:59	5.18	107.7	143.2
3/22/2012	19:00	5.22	106.5	142.0
3/22/2012	19:01	5.21	107.7	143.4
3/22/2012	19:02	5.22	107.0	142.6
3/22/2012	19:03	5.18	106.9	142.1
3/22/2012	19:04	5.17	105.5	140.2
3/22/2012	19:05	5.14	105.7	140.2
3/22/2012	19:06	5.06	106.1	140.1
3/22/2012	19:07	5.07	105.8	139.6
3/22/2012	19:08	5.06	106.7	140.8
3/22/2012	19:09	5.10	106.6	141.0
3/22/2012	19:10	5.17	104.8	139.2
3/22/2012	19:11	5.19	104.1	138.5
3/22/2012	19:12	5.19	103.3	137.4
3/22/2012	19:13	5.16	103.2	137.0
3/22/2012	19:14	5.17	101.9	135.4
3/22/2012	19:15	5.14	103.3	137.0
3/22/2012	19:16	5.06	104.7	138.2
3/22/2012	19:17	5.08	103.6	136.8

Valero Refining-Texas, L.P.
Houston Refinery
Houston, TX

CEMS DATA

SRU B Incinerator

Date	Time	O_2	SO_2	SO_2 @ 0%O_2
		%	ppm	ppm
3/22/2012	19:18	5.03	104.2	137.2
3/22/2012	19:19	5.00	104.5	137.4
3/22/2012	19:20	4.99	106.0	139.3
3/22/2012	19:21	4.97	106.2	139.3
3/22/2012	19:22	5.02	105.3	138.6
3/22/2012	19:23	5.04	107.1	141.1
3/22/2012	19:24	5.07	105.6	139.4
3/22/2012	19:25	5.14	105.0	139.2
3/22/2012	19:26	5.12	105.2	139.3
3/22/2012	19:27	5.18	105.4	140.1
3/22/2012	19:28	5.22	104.1	138.8
3/22/2012	19:29	5.19	103.7	137.9
3/22/2012	19:30	5.22	100.8	134.4
3/22/2012	19:31	5.22	101.9	135.8
3/22/2012	19:32	5.26	102.1	136.4
3/22/2012	19:33	5.19	103.0	137.1
3/22/2012	19:34	5.22	102.6	136.7
3/22/2012	19:35	5.17	102.6	136.3
3/22/2012	19:36	5.12	103.2	136.6
3/22/2012	19:37	5.11	102.9	136.2
3/22/2012	19:38	5.08	102.1	134.9
3/22/2012	19:39	5.03	102.2	134.5
3/22/2012	19:40	5.00	103.1	135.5
3/22/2012	19:41	4.97	103.8	136.2
3/22/2012	19:42	4.96	104.1	136.5
3/22/2012	19:43	4.99	104.1	136.8
3/22/2012	19:44	5.05	103.9	137.0
3/22/2012	19:45	5.11	103.6	137.1
3/22/2012	19:46	5.10	103.5	136.9
3/22/2012	19:47	5.12	103.9	137.6
3/22/2012	19:48	5.15	102.6	136.1
3/22/2012	19:49	5.13	103.0	136.6
3/22/2012	19:50	5.16	102.9	136.6
3/22/2012	19:51	5.15	102.5	136.1
3/22/2012	19:52	5.23	101.2	135.0
3/22/2012	19:53	5.23	100.3	133.8
3/22/2012	19:54	5.15	102.3	135.7
3/22/2012	19:55	5.12	102.4	135.6
3/22/2012	19:56	5.14	102.0	135.2
3/22/2012	19:57	5.12	103.3	136.8
3/22/2012	19:58	5.09	103.6	137.0
3/22/2012	19:59	5.11	103.0	136.3
3/22/2012	20:00	5.13	102.5	135.8
3/22/2012	20:01	5.12	101.6	134.6
3/22/2012	20:02	5.13	101.1	134.0
3/22/2012	20:03	5.14	100.8	133.6
3/22/2012	20:04	5.09	99.7	131.8
3/22/2012	20:05	5.02	99.8	131.4
3/22/2012	20:06	4.97	101.0	132.5
3/22/2012	20:07	4.99	101.0	132.6
3/22/2012	20:08	4.99	100.7	132.2
3/22/2012	20:09	5.04	100.6	132.6
3/22/2012	20:10	5.03	100.7	132.6
3/22/2012	20:11	5.05	101.7	134.0
3/22/2012	20:12	5.07	101.5	134.0
3/22/2012	20:13	5.09	102.0	134.8
3/22/2012	20:14	5.11	100.9	133.5
3/22/2012	20:15	5.13	100.4	133.0

Valero Refining-Texas, L.P.
Houston Refinery
Houston, TX

CEMS DATA

SRU B Incinerator

Date	Time	O_2	SO_2	SO_2 @ 0%O_2
		%	ppm	ppm
3/22/2012	20:16	5.15	100.6	133.5
3/22/2012	20:17	5.13	100.2	132.8
3/22/2012	20:18	5.13	99.4	131.7
3/22/2012	20:19	5.13	100.5	133.1
3/22/2012	20:20	5.13	99.3	131.6
3/22/2012	20:21	5.15	100.1	132.8
3/22/2012	20:22	5.09	101.3	133.9
3/22/2012	20:23	5.07	102.2	135.0
3/22/2012	20:24	5.08	101.8	134.4
3/22/2012	20:25	5.07	101.2	133.7
3/22/2012	20:26	5.08	101.0	133.4
3/22/2012	20:27	5.11	101.2	133.9
3/22/2012	20:28	5.12	100.5	133.1
3/22/2012	20:29	5.09	100.6	133.0
3/22/2012	20:30	5.08	100.9	133.3
3/22/2012	20:31	5.08	101.7	134.4
3/22/2012	20:32	5.09	101.4	134.0
3/22/2012	20:33	5.05	101.4	133.7
3/22/2012	20:34	5.04	100.0	131.8
3/22/2012	20:35	5.02	99.6	131.1
3/22/2012	20:36	4.99	101.3	133.1
3/22/2012	20:37	5.03	101.0	133.0
3/22/2012	20:38	5.02	100.5	132.3
3/22/2012	20:39	5.04	105.6	139.1
3/22/2012	20:40	5.02	101.1	133.0
3/22/2012	20:41	5.03	98.1	129.1
3/22/2012	20:42	5.06	98.5	130.0
3/22/2012	20:43	5.06	98.3	129.7
3/22/2012	20:44	5.06	98.5	130.0
3/22/2012	20:45	5.07	98.2	129.7
3/22/2012	20:46	5.07	100.0	132.1
3/22/2012	20:47	5.09	99.8	131.9
3/22/2012	20:48	5.06	98.9	130.5
3/22/2012	20:49	5.11	98.6	130.6
3/22/2012	20:50	5.09	98.0	129.6
3/22/2012	20:51	5.09	98.5	130.2
3/22/2012	20:52	5.11	98.0	129.7
3/22/2012	20:53	5.09	98.8	130.7
3/22/2012	20:54	5.13	98.4	130.4
3/22/2012	20:55	5.14	98.5	130.6
3/22/2012	20:56	5.11	97.4	128.9
3/22/2012	20:57	5.07	99.3	131.0
3/22/2012	20:58	5.04	99.9	131.6
3/22/2012	20:59	5.02	99.4	130.8
3/22/2012	21:00	5.02	102.0	134.2

GOLDEN SPECIALTY

The *GOLD STANDARD* for Air Testing

Air Quality Test Report

CEMS Cylinder Gas Audit (CGA)
First Quarter, 2012

Valero Refining-Texas, L.P.
Houston, Texas

Multiple Sources

Operating Permit No. 01381

Report Number: 12VALH172
Date Tested: March 22 and 23, 2012
Date Prepared: April 11, 2012

PREPARED FOR
Valero Refining – Texas, L.P.
Houston Refinery
9701 Manchester Road
Houston, Texas 77012

Phone 713.924.1524

Prepared by:
GOLDEN SPECIALTY, INC.
888.472.9898
goldenspecialty.com

Air Quality Test Report

CEMS Cylinder Gas Audit (CGA)
First Quarter, 2012

Valero Refining-Texas, L.P.
Houston, Texas

Multiple Sources

This report is supported by GOLDEN's Quality Assurance Manual and ASTM D7036 Interim Accreditation as an Air Emission Testing Body. The information included in the report is authentic and accurate to the best of our knowledge.

Certified by:

Scott B. Swiggard, Ph. D., QSTI 2006-025
Technical Director

Daniel A. Loubiere, QSTI 2008-128
Project Manager / Onsite QSTI

TABLE OF CONTENTS

EXECUTIVE SUMMARY 1
TABLE 1-1. FIRST QUARTER 2012 CGA RESULTS VS. ALLOWABLE 1
INTRODUCTION 2
PURPOSE OF TEST 2
PROBLEMS, DEVIATIONS AND/OR EXCEPTIONS 2
PERFORMANCE TEST PROCEDURES 3
CYLINDER GAS AUDIT (CGA) 3
SAMPLE CALCULATIONS 4
TABLE 1-2. CYLINDER GAS AUDIT DATA 4
CYLINDER GAS AUDIT CALCULATIONS 4
AVERAGE DIFFERENCE (D_{AVG}) 4
ACCURACY 4
AUDIT RESULTS 5
TABLE 1-1. FIRST QUARTER 2012 CGA RESULTS VS. ALLOWABLE 5
APPENDIX A – CALIBRATION DATA ..... A
APPENDIX B – BOILER NO. 1 CGA RESULTS ..... B
APPENDIX C – BOILER NO. 2 CGA RESULTS C
APPENDIX D – BOILER NO. 3 CGA RESULTS ..... D
APPENDIX E – FCCU SCRUBBER CGA RESULTS ..... E
APPENDIX F – FUEL GAS DRUM CGA RESULTS ..... F
APPENDIX G – CRUDE ATMOSPHERIC HEATER NORTH STACK CGA RESULTS ..... G
APPENDIX H – CRUDE ATMOSPHERIC HEATER SOUTH STACK CGA RESULTS ..... H

EXECUTIVE SUMMARY

Golden Specialty, Inc. (GOLDEN) was contracted Valero Refining-Texas, L.P. (Valero) to perform air testing at their facility located in Houston, Texas. GOLDEN performed Cylinder Gas Audits (CGAs) on multiple continuous emissions monitoring systems (CEMS) installed at their facility. The audit was conducted in accordance with Operating Permit No. 01381.

The CGAs performed on March 22 and 23, 2012, were performed by Mr. Dan Loubiere, with the assistance of Messrs. Kevin Farwell and Bryan Johnson. The results of the CGAs, presented in Table 1-1, demonstrate that the average response for the analyzer was within the 15% requirement 40 CFR Part 60, Appendix F, for each source.

Unit	Test Date	Cylinder Gas	Mid-Range Audit Gas	High-Range Audit Gas	*Allowable*
			Accuracy (%)	Accuracy (%)	
Boiler No. 1	3/22/2012	O_2	1.01	0.80	*15%*
		NO_x	-1.45	-1.64	*15%*
		CO	10.35	1.36	*15%*
Boiler No. 2	3/22/2012	O_2	0.47	0.50	*15%*
		NO_x	-8.01	-3.86	*15%*
		CO	2.65	7.84	*15%*
Boiler No. 3	3/22/2012	O_2	0.20	-0.27	*15%*
		NO_x	-1.49	-6.35	*15%*
		CO	10.19	-4.20	*15%*
FCCU Scrubber	3/22/2012	O_2	1.21	0.60	*15%*
		SO_2	-4.19	0.83	*15%*
		NO_x	-0.76	-1.10	*15%*
		CO	5.18	0.26	*15%*
Fuel Gas Drum	3/23/2012	H_2S	9.89	2.34	*15%*
Crude Atmospheric Heater North Stack	3/23/2012	O_2	1.08	1.03	*15%*
		NO_x	-1.44	-1.04	*15%*
		CO	0.02	1.79	*15%*
Crude Atmospheric Heater South Stack	3/23/2012	O_2	1.14	1.07	*15%*
		NO_x	-1.35	0.30	*15%*
		CO	-0.28	1.22	*15%*

Table 1-1. First Quarter 2012 CGA Results vs. Allowable

Based on the results shown in this report, the CEMS are operating within the limits of 40 CFR 60 Appendix F, Quality Assurance requirements for gas continuous emissions monitoring system used for compliance determination.

INTRODUCTION

Purpose of Test

The Audit was performed to demonstrate compliance with the requirements of 40 CFR Part 60, Appendix F, Quality Assurance requirements for gas continuous emissions monitoring systems used for compliance determination.

Problems, Deviations and/or Exceptions

No problems were encountered during this test program.

PERFORMANCE TEST PROCEDURES

Cylinder Gas Audit (CGA)

The CGA was performed in accordance with procedures outlined in 40 CFR 60 Appendix F. The audit consisted of alternately challenging the CEMS with mid and high level EPA Protocol Calibration gas standards. Triplicate runs were performed. The average response was compared to the respective calibration gas value and used to calculate the percent error for each audit point using the calculation presented below.

$$Percent\ Error = \left(\frac{Gas Value - Response}{Gas Value} \right) x100\%$$

SAMPLE CALCULATIONS

The following calculations were used in the determination of the accuracy for each CEMS audit point. The values listed below in Table 1-2 are the actual data obtained for the O_2 mid range calibration gas during the cylinder gas audit testing of the Boiler No. 1 CEMS and are presented to demonstrate the calculations for the CGA.

Run#	1 (ppm)	2 (ppm)	3 (ppm)
C_M	4.98	5.02	5.03
C_a	4.96	4.96	4.96
D_i *	0.02	0.06	0.07

Table 1-2. Cylinder Gas Audit Data

Cylinder Gas Audit Calculations

Average Difference (d_{avg})

$$\bar{d} = \left[\frac{1}{n}\sum_{i=1}^{n} d_i\right]$$

Where:

d = Average difference between response and cylinder value data
n = Number of data points
d_i = Difference between response and cylinder value for any given point

$$\bar{d} = \frac{1}{3}[d_1 + d_2 + d_3]$$

$$\bar{d} = \mathbf{0.05}$$

Accuracy

$$A = \frac{C_m - C_a}{C_a} \times 100$$

Where:

C_m = Average CEMS response during audit
C_a = Certified gas value used for audit

$$\underline{\boldsymbol{A}} = \mathbf{1.01\ \%}$$

AUDIT RESULTS

The certifications of each gas used for the CGA program are presented in Appendix B. Assessment Data Printouts from the CGAs are presented in Appendices A through J. A printout of the CEMs performance, provided by Valero, is presented in each appendix.

Unit	Test Date	Cylinder Gas	Mid-Range Audit Gas	High-Range Audit Gas	*Allowable*
			Accuracy (%)	Accuracy (%)	
Boiler No. 1	3/22/2012	O_2	1.01	0.80	*15%*
		NO_x	-1.45	-1.64	*15%*
		CO	10.35	1.36	*15%*
Boiler No. 2	3/22/2012	O_2	0.47	0.50	*15%*
		NO_x	-8.01	-3.86	*15%*
		CO	2.65	7.84	*15%*
Boiler No. 3	3/22/2012	O_2	0.20	-0.27	*15%*
		NO_x	-1.49	-6.35	*15%*
		CO	10.19	-4.20	*15%*
FCCU Scrubber	3/22/2012	O_2	1.21	0.60	*15%*
		SO_2	-4.19	0.83	*15%*
		NO_x	-0.76	-1.10	*15%*
		CO	5.18	0.26	*15%*
Fuel Gas Drum	3/23/2012	H_2S	9.89	2.34	*15%*
Crude Atmospheric Heater North Stack	3/23/2012	O_2	1.08	1.03	*15%*
		NO_x	-1.44	-1.04	*15%*
		CO	0.02	1.79	*15%*
Crude Atmospheric Heater South Stack	3/23/2012	O_2	1.14	1.07	*15%*
		NO_x	-1.35	0.30	*15%*
		CO	-0.28	1.22	*15%*

Table 1-1. First Quarter 2012 CGA Results vs. Allowable

GOLDEN SPECIALTY

Air Quality Test Report

APPENDIX A –
Calibration Data

COASTAL
Specialty Gas

55 N. 4th Street
Beaumont, TX 77701

Certificate of Analysis – EPA Protocol Gas

Customer:				PO Number:	DAN
Golden Specialty Consulting				References:	CGS-10-7427-8
931 Senco				Date Filled:	12/7/2011
Deer Park	TX	77536-0000		Customer Part #:	

Serial Number	Size	Concentration Basis	Standard type	Certificate ID
EB0005877	ALS	Mole	EPA Protocol	01-12061103

Certified Concentration

Oxygen =	8.09%
Nitrogen =	Balance Gas

Analytical Information

Component	Analyzer Make/Model/SN			Analytical Principle	Last Calibration Date
Oxygen	Servomex	OA.244	244/158	Paramagnetic	11/14/2011

Assay Date 12/6/2011

Reference Standard(s)

Component	GMIS #	Cylinder #	Concentration	Uncertainty	Expiration Date
Oxygen	4836-3-1	CC121901	10.0%	+/- 0.1%	6/17/2012

This calibration standard has been certified per the 1997 EPA Traceability Protocol, Document EPA-600/97/121 using the procedure G1. All values certified to be +/- 1% NIST Traceable.

Do Not Use This Standard Below 100 psig (0.7 Megapascals).

Valve Outlet Connection CGA:	590
Max Pressure(psig)@70°:	2000
Analysis Date	12/6/2011
Shelf Life:	36 months
Expiration date	12/7/2014

Certified By: Kelly Hays

Reviewed By:

Produced By:
Coastal Specialty Gas: (409) 838-3757 Fax (409) 835-1522
Coastal Specialty Gas PGVP Vendor ID: O12011

COASTAL
Specialty Gas

55 N 4th Street
Beaumont, TX 77701

Certificate of Analysis – EPA Protocol Gas

Customer:				PO Number:	DAN
Golden Specialty Consulting				Reference#:	CGS-10-7427-7
931 Seaco				Date Filled:	12/1/2011
Deer Park	TX	77536-0000		Customer Part #:	

Serial Number	Size	Concentration Basis	Standard type	Certificate ID
EB0081188	AL5	Mole	EPA Protocol	01-12081102

Certified Concentration

Oxygen *	4.95%
Nitrogen *	Balance Gas

Analytical Information

Component	Analyzer Make/Model/SN			Analytical Principle	Last Calibration Date
Oxygen	Servomex	OA.244	244/158	Paramagnetic	11/14/2011

Assay Date 12/6/2011

Reference Standard(s)

Component	GMIS #	Cylinder #	Concentration	Uncertainty	Expiration Date
Oxygen	4839-3-1	CC121981	10.0%	+/- 0.1%	6/17/2012

This calibration standard has been certified per the 1997 EPA Traceability Protocol, Document EPA-600/97/121, using the procedure G1. All values certified to be +/- 1% NIST Traceable.

Do Not Use This Standard Below 100 psig (0.7 Megapascals)

Valve Outlet Connection DISS:	590
Min Pressure(psig)@70F:	2000
Analysis Date:	12/6/2011
Shelf Life:	36 months
Expiration date:	12/7/2014

Certified By: Kelly Hays

Reviewed By:

Produced By:
Coastal Specialty Gas: (409) 838-3757 Fax (409) 835-1522
Coastal Specialty Gas PGVP Vendor ID: O12011

COASTAL
Specialty Gas

33 N. 4th Street
Beaumont, TX 77701
(409) 838-3757

Certificate of Analysis

Size:	Serial Number:	Concentration Basis:	Standard type:	Reference #:	PO number:
ALS	EB0032690	Mole	EPA Protocol	010912-6	

Component	CAS Number	Requested Concentration	Certified Concentration	Accuracy	Method
SULFUR DIOXIDE	9-5-7446	135.0 ppm	141.6 ppm	+/- 1 %	Dispersive Infrared
NITROGEN	7727-37-9	Balance gas	Balance gas		

Valve Outlet Connection: CGA 660
Mix Pressure (psig) @ 70°F: 2000
Certification Date: 1/4/2012
Shelf Life: 24 months
Expiration date: 1/4/2014

REFERENCE STANDARD	Std Type	Cylinder #	Concentration
	SO2 GMIS	CC84414	899.38 ppm

INSTRUMENTATION	Instrument / Model	Serial #	Last Date Calibrated	Analytical Method
	Rosemount 880a	F-04300088	1/4/2012	Dispersive Infrared

Note: This standard was analyzed according to EPA Traceability Protocol for Assay and Certification of Gaseous Calibration Standards, Procedure G1 (September 1997).

*Do not use this standard when cylinder pressure is below 150 psig.

Issued By: Frank Haney

Reviewed By: Kelly Glaze

Produced by: Global Calibration Gases LLC (PGVP ID: N12011)
1600 15th Avenue Drive East, #109
Palmetto, FL 34221

COASTAL
Specialty Gas

55 N. 4th Street
Beaumont, TX 77701
(409) 838-3757

Certificate of Analysis

Size:	Serial Number:	Concentration Basis:	Standard type:	Reference #:	PO number:
ALS	EB0030226	Mole	EPA Protocol	010912-7	

Component	CAS Number	Requested Concentration	Certified Concentration	Accuracy	Method
SULFUR DIOXIDE	9-5-7446	65.0 ppm	72.0 ppm	+/- 1 %	Dispersive Infrared
NITROGEN	7727-37-9	Balance gas	Balance gas		

Valve Outlet Connection: CGA 660
Mix Pressure (psig) @ 70°F: 2000
Certification Date: 1/4/2012
Shelf Life: 24 months
Expiration date: 1/4/2014

REFERENCE STANDARD	Std Type	Cylinder #	Concentration
	SO2 GMIS	CC84414	899.38 ppm

INSTRUMENTATION	Instrument / Model	Serial #	Last Date Calibrated	Analytical Method
	Rosemount 880a	F-04300088	1/4/2012	Dispersive Infrared

Note: This standard was analyzed according to EPA Traceability Protocol for Assay and Certification of Gaseous Calibration Standards, Procedure G1 (September 1997).

*Do not use this standard when cylinder pressure is below 150 psig.

Issued By: Frank Haney

Reviewed By: Kelly Hoze

Produced by: Global Calibration Gases LLC (PGVP ID: N12011)
1500 15th Avenue Drive East, #109
Palmetto, FL 34221

COASTAL
Specialty Gas

55 N. 4th Street
Beaumont, TX 77701

Certificate of Analysis – EPA Protocol Gas

Customer:				PO Number:	DAN
Golden Specialty Consulting				Reference#:	CGS-10-7427-6
931 Seaco				Date Filled:	12/1/2011
Deer Park	TX	77536-0000		Customer Part #:	

Cylinder Number	Size	Concentration Basis	Standard type	Certificate ID
CC145666	ALS	Mole	EPA Protocol	03-12151104

Certified Concentration

Carbon Monoxide =	699.2 ppm
Nitric Oxide =	283.4 ppm
NOx =	287.7 ppm
Nitrogen =	Balance Gas

Analytical Information

Component	Analyzer Make/Model/SN		Analytical Principle	Last Calibration Date
Carbon Monoxide	Thermo	Nicolet 6700 APW100179	FT-IR	11/16/2011
Nitric Oxide	Thermo	Nicolet 6700 APW100179	FT-IR	11/16/2011

First Assay Date 12/8/2011 Second Assay Date 12/15/2011

Reference Standard(s)

Component	GMIS #	Cylinder #	Concentration	Uncertainty	Expiration Date
Carbon Monoxide	3-10-1102	CC346730	250.5 ppm	+/- 1.2 ppm	3/11/2013
Nitric Oxide	10-28-1001	CC16362	226.2 ppm	+/- 1.2 ppm	10/29/2012
NOx	10-28-1001	CC16362	227.1 ppm		10/29/2012
Nitrogen			Balance Gas		

This calibration standard has been certified per the 1997 EPA Traceability Protocol, Document EPA-600/97/121, using the procedure G1

Do Not Use This Standard When Pressure Falls Below 100 psig (0.7 Megapascals)

Valve Outlet Connection CGA	660
Mix Pressure(psig)@70F	2000
Analysis Date	12/15/2011
Shelf Life	24 months
Expiration date	12/15/2013

Certified By: Kelly Blaze Reviewed By:

Produced By:
Coastal Specialty Gas: (409) 838-3757 Fax (409) 835-1522
Coastal Specialty Gas PGVP Vendor ID: O12011

COASTAL
Specialty Gas

55 N. 4th Street
Beaumont, TX 77701

Certificate of Analysis – EPA Protocol Gas

Customer:				PO Number:	DAN
Golden Specialty Consulting				Reference#:	CGS-10-7427-2
931 Searco				Date Filled:	12/1/2011
Deer Park	TX	77536-0000		Customer Part #:	

Cylinder Number	Size	Concentration Basis	Standard type	Certificate ID
CC329567	AL-S	Mole	EPA Protocol	03-12141103

Certified Concentration

Carbon Monoxide =	278.2 ppm
Nitric Oxide =	284.5 ppm
NOx =	286.8 ppm
Nitrogen =	Balance Gas

Analytical Information

Component	Analyzer Make/Model/SN	Analytical Principle	Last Calibration Date
Carbon Monoxide	Thermo Nicolet 6700 AFW100179	FT-IR	11/18/2011
Nitric Oxide	Thermo Nicolet 6700 AFW100179	FT-IR	11/18/2011

First Assay Date 12/7/2011 Second Assay Date 12/14/2011

Reference Standard(s)

Component	GMIS #	Cylinder #	Concentration	Uncertainty	Expiration Date
Carbon Monoxide	3-10-1102	CC346730	250.5 ppm	+/- 1.2 ppm	3/11/2013
Nitric Oxide	10-28-1001	CC16362	226.2 ppm	+/- 1.2 ppm	10/29/2012
NOx	10-28-1001	CC16362	227.1 ppm		10/29/2012
Nitrogen			Balance Gas		

This calibration standard has been certified per the 1997 EPA Traceability Protocol, Document EPA 600/R97/121, using the procedure G1

Do Not Use This Standard When Pressure Falls Below 100 psig (0.7 Megapascals)

Valve Outlet Connection CGA:	660
Lab Pressure(psig)@70°:	2020
Analysis Date:	12/14/2011
Shelf life:	24 months
Expiration date:	12/16/2013

Certified By: Kelly Blaze Reviewed By:

Produced By:
Coastal Specialty Gas: (409) 835-3757 Fax (409) 835-1522
Coastal Specialty Gas PGVP Vendor ID: 012011

6

COASTAL
Specialty Gas

55 N. 4th Street
Beaumont, TX 77701

Certificate of Analysis – EPA Protocol Gas

Customer:			PO Number:	DAN
Golden Specialty Consulting			Reference#:	CGS-10-7427-5
931 Seaco			Date Filled:	12/2/2011
Deer Park	TX	77536-0000	Customer Part #:	

Cylinder Number	Size	Concentration Basis	Standard type	Certificate ID
CC117780	ALS	Mole	EPA Protocol	03-12151103

Certified Concentration

Carbon Monoxide =	248.9 ppm
Nitric Oxide =	124.3 ppm
NOx =	126.3 ppm
Nitrogen =	Balance Gas

Analytical Information

Component	Analyzer Make/Model/SN		Analytical Principle	Last Calibration Date
Carbon Monoxide	Thermo	Nicolet 6700 APW100179	FT-IR	11/16/2011
Nitric Oxide	Thermo	Nicolet 6700 APW100179	FT-IR	11/16/2011

First Assay Date 12/8/2011 Second Assay Date 12/15/2011

Reference Standard(s)

Component	GMIS #	Cylinder #	Concentration	Uncertainty	Expiration Date
Carbon Monoxide	3-10-1102	CC346730	250.5 ppm	+/- 1.2 ppm	3/11/2013
Nitric Oxide	10-26-1001	CC16362	226.2 ppm	+/- 1.2 ppm	10/29/2012
NOx	10-26-1001	CC16362	227.1 ppm		10/29/2012
Nitrogen			Balance Gas		

This calibration standard has been certified per the 1997 EPA Traceability Protocol, Document EPA-600/97/121, using the procedure G1.

Do Not Use This Standard When Pressure Falls Below 100 psig (0.7 Megapascals)

Valve Outlet Connection CGA:	660
Mix Pressure(psig)@70F	2000
Analysis Date	12/15/2011
Shelf Life	24 months
Expiration date:	12/16/2013

Certified By Kelly Glaze Reviewed By [signature]

Produced By:
Coastal Specialty Gas: (409) 838-3757 Fax (409) 835-1522
Coastal Specialty Gas PGVP Vendor ID: O12011

COASTAL
Specialty Gas

55 N. 4th Street
Beaumont, TX 77701

Certificate of Analysis – EPA Protocol Gas

Customer:				PO Number:	DAN
Golden Specialty Consulting				Reference#:	CGS-10-7427-4
931 Seaco				Date Filled:	12/1/2011
Deer Park	TX	77536-0000		Customer Part #:	

Cylinder Number	Size	Concentration Basis	Standard type	Certificate ID
EB0003623	ALS	Mole	EPA Protocol	03-12151102

Certified Concentration

Carbon Monoxide =	277.7 ppm
Nitric Oxide =	108.7 ppm
NOx =	109.3 ppm
Nitrogen =	Balance Gas

Analytical Information

Component	Analyzer Make/Model/SN		Analytical Principle	Last Calibration Date
Carbon Monoxide	Thermo	Nicolet 6700 APW100179	FT-IR	11/16/2011
Nitric Oxide	Thermo	Nicolet 6700 APW100179	FT-IR	11/16/2011

First Assay Date	12/6/2011	Second Assay Date	12/15/2011

Reference Standard(s)

Component	GMIS #	Cylinder #	Concentration	Uncertainty	Expiration Date
Carbon Monoxide	3-10-1102	CC346730	250.5 ppm	+/- 1.2 ppm	3/11/2013
Nitric Oxide	10-28-1001	CC16382	226.2 ppm	+/- 1.2 ppm	10/29/2012
NOx	10-28-1001	CC16382	227.1 ppm		10/29/2012
Nitrogen			Balance Gas		

This calibration standard has been certified per the 1997 EPA Traceability Protocol, Document EPA-600/97/121, using the procedure G1.

Do Not Use This Standard When Pressure Falls Below 100 psig (0.7 Megapascals)

Valve Outlet Connection CGA	660
Min Pressure(psig)@70F	2000
Analysis Date	12/15/2011
Shelf Life	24 months
Expiration date	12/15/2013

Certified By: Kelly Glaze

Reviewed By:

Produced By:
Coastal Specialty Gas: (409) 838-3757 Fax (409) 836-1522
Coastal Specialty Gas PGVP Vendor ID: 012011

COASTAL
Specialty Gas

55 N. 4th Street
Beaumont, TX 77701

Certificate of Analysis – EPA Protocol Gas

Customer:			PO Number:	DAN
Golden Specialty Consulting			Reference#:	CGS-10-7427-1
931 Sasco			Date Filled:	12/1/2011
Deer Park	TX	77536-0000	Customer Part #:	

Cylinder Number	Size	Concentration Gas/s	Standard type	Certificate ID
CC346757	ALS	Mole	EPA Protocol	03-12141101

Certified Concentration

Carbon Monoxide =	128.8 ppm
Nitric Oxide =	124.7 ppm
NOx =	125.8 ppm
Nitrogen =	Balance Gas

Analytical Information

Component	Analyzer Make/Model/SN	Analytical Principle	Last Calibration Date
Carbon Monoxide	Thermo Nicolet 6700 APW100178	FT-IR	11/16/2011
Nitric Oxide	Thermo Nicolet 6700 APW100179	FT-IR	11/16/2011

First Assay Date 12/7/2011 Second Assay Date 12/14/2011

Reference Standard(s)

Component	GMIS #	Cylinder #	Concentration	Uncertainty	Expiration Date
Carbon Monoxide	3-10-1102	CC346730	250.5 ppm	+/- 1.2 ppm	3/11/2013
Nitric Oxide	10-28-1001	CC16382	226.2 ppm	+/- 1.2 ppm	10/28/2012
NOx	10-28-1001	CC16382	227.1 ppm		10/28/2012
Nitrogen			Balance Gas		

This calibration standard has been certified per the 1997 EPA Traceability Protocol, Document EPA-600/97/121, using our procedure G1.

Do Not Use This Standard When Pressure Falls Below 100 psig (0.7 Megapascals)

Valve Outlet Connection CGA:	880
Min Pressure(psig)@70F:	2000
Analysis Date	12/16/2011
Shelf Life	24 months
Expiration date	12/16/2013

Certified By: Kelly Glaze Reviewed By: [signature]

Produced By:
Coastal Specialty Gas: (409) 838-3757 Fax (409) 835-1522
Coastal Specialty Gas PGVP Vendor ID: 012011

5

COASTAL
Specialty Gas

55 N. 4th Street
Beaumont, TX 77701

Certificate of Analysis – EPA Protocol Gas

Customer:				PO Number:	DAN
Golden Specialty Consulting				Reference#:	CGS-10-7427-3
931 Sasco				Date Filled:	12/2/2011
Deer Park	TX	77536-0000		Customer Part #:	

Cylinder Number	Size	Concentration Basis	Standard type	Certificate ID
EB0006533	AL8	Mole	EPA Protocol	03-12151101

Certified Concentration

Carbon Monoxide =	127.2 ppm
Nitric Oxide =	49.32 ppm
NOx =	50.10 ppm
Nitrogen =	Balance Gas

Analytical Information

Component	Analyzer Make/Model/SN	Analytical Principle	Last Calibration Date
Carbon Monoxide	Thermo Nicolet 6700 APW100179	FT-IR	11/16/2011
Nitric Oxide	Thermo Nicolet 6700 APW100179	FT-IR	11/16/2011

First Assay Date 12/8/2011 Second Assay Date 12/15/2011

Reference Standard(s)

Component	GMIS #	Cylinder #	Concentration	Uncertainty	Expiration Date
Carbon Monoxide	3-10-1102	CC346730	250.5 ppm	+/- 1.2 ppm	3/11/2013
Nitric Oxide	10-28-1001	CC16382	226.2 ppm	+/- 1.2 ppm	10/20/2012
NOx	10-28-1001	CC16382	227.1 ppm		10/29/2012
Nitrogen			Balance Gas		

This calibration standard has been certified per the 1997 EPA Traceability Protocol, Document EPA-600/97/121, using the procedure G1.

Do Not Use This Standard When Pressure Falls Below 100 psig (0.7 Megapascals).

Valve Outlet Connection CGA:	660
Min Pressure(psig)@70F :	2000
Analysis Date:	12/15/2011
Shelf Life :	24 months
Expiration date:	12/15/2013

Certified By: Kelly Hays Reviewed By: Fred Cox

Produced By:
Coastal Specialty Gas: (409) 838-3757 Fax (409) 835-1522
Coastal Specialty Gas PGVP Vendor ID: G12011

COASTAL
Specialty Gas

55 N. 4th Street
Beaumont, TX 77701
(409) 838-3757

Certificate of Analysis

Size:	Serial Number:	Concentration Basis:	Standard type:	Reference #:	PO number:
ALS	EB0032631	Mole	EPA Protocol	121411-5	

Component	CAS Number	Requested Concentration	Certified Concentration	Accuracy	Method
HYDROGEN SULFIDE	6-4-7783	165.0 ppm	176.3 ppm	+/- 1 %	TCD
NITROGEN	7727-37-9	Balance gas	Balance gas		

Valve Outlet Connection: CGA 330
Mix Pressure (psig) @ 70°F: 2000
Certification Date: 12/14/2011
Shelf Life: 24 months
Expiration date: 12/14/2013

REFERENCE STANDARD	Std Type	Cylinder #	Concentration
	GMIS	EB0032528	191.0 ppm

INSTRUMENTATION	Instrument / Model	Serial #	Last Date Calibrated	Analytical Method
	Agilent Quad Series	US02002031	12/14/2011	Thermal conductivity

Note: This standard was analyzed according to EPA Traceability Protocol for Assay and Certification of Gaseous Calibration Standards, Procedure G1 (September 1997).

*Do not use this standard when cylinder pressure is below 150 psig.

Issued By: Frank Haney

Reviewed By: Kelly Glaze

Produced by: Global Calibration Gases LLC (PGVP ID: N12011)
1500 15th Avenue Drive East, #109
Palmetto, FL 34221

COASTAL
Specialty Gas

55 N. 4th Street
Beaumont, TX 77701
(409) 838-3757

Certificate of Analysis

Size:	Serial Number:	Concentration Basis:	Standard type:	Reference #:	PO number:
ALS	EB0032620	Mole	EPA Protocol	121411-4	

Component	CAS Number	Requested Concentration	Certified Concentration	Accuracy	Method
HYDROGEN SULFIDE	6-4-7783	65.0 ppm	67.28 ppm	+/- 1 %	TCD
NITROGEN	7727-37-9	Balance gas	Balance gas		

Valve Outlet Connection: CGA 330
Mix Pressure (psig) @ 70°F: 2000
Certification Date: 12/14/2011
Shelf Life: 24 months
Expiration date: 12/14/2013

REFERENCE STANDARD	Std Type	Cylinder #	Concentration
	GMIS	EB0023517	78.9 ppm

INSTRUMENTATION	Instrument / Model	Serial #	Last Date Calibrated	Analytical Method
	Agilent Quad Series	US02002031	12/14/2011	Thermal conductivity

Note: This standard was analyzed according to EPA Traceability Protocol for Assay and Certification of Gaseous Calibration Standards, Procedure G1 (September 1997).

*Do not use this standard when cylinder pressure is below 150 psig.

Issued By: Frank Haney

Reviewed By: Kelly Hayes

Produced by: Global Calibration Gases LLC (PGVP ID: N12011)
1600 15th Avenue Drive East, #109
Palmetto, FL 34221

APPENDIX B – Boiler No. 1 CGA Results

CYLINDER GAS AUDIT (CGA)
ASSESSMENT DATA SHEET

Company:	Valero Refining-Texas, L.P.	**Analyzer Info**	
Location:	Houston, TX	**Manufacturer:**	Servomex
Source:	Boiler No. 1	**Model No:**	1440
CEMS type:	O_2	**Range (%):**	0 - 25 %
Audit Date:	March 22, 2012	**Serial No.:**	3659
Project No.:	12VALH172	**Personnel.:**	KF/BJ

$$\text{Accuracy} = \left(\frac{\overline{C_m} - C_a}{C_a}\right) \times 100$$

Mid Level Calibration Gas	
40 CFR 60 App. F Sources	40 CFR 266 Appendix IX Sources
Pollutant analyzers - 20 - 30 % of span	CO analyzers (200 ppm span) - 60 - 80 ppm
Oxygen analyzers - 4 - 6 % O_2	CO analyzers (3,000 ppm span) - 900 - 1200 ppm
Carbon dioxide analyzers - 5 -8 % CO_2	Oxygen analyzers - 8 - 10 % O_2

	Response			
Trial No. 1:	4.98	Gas type:	Protocol	
Trial No. 2:	5.02	Concentration (C_a):	4.96	%
Trial No. 3:	5.03	Tank serial #:	EB0001188	
Average (C_m) :	5.01	Expiration Date:	December 7, 2014	
Accuracy %:	1.01			

High Level Calibration Gas	
40 CFR 60 App. F Sources	40 CFR 266 Appendix IX Sources
Pollutant analyzers - 50 - 60 % of span	CO analyzers (200 ppm span) - 140 - 160 ppm
Oxygen analyzers - 8 - 12 % O_2	CO analyzers (3,000 ppm span) - 2100 - 2400 ppm
Carbon dioxide analyzers - 10 -14 % CO_2	Oxygen analyzers - 14 - 16 % O_2

	Response			
Trial No. 1:	10.06	Gas type:	Protocol	
Trial No. 2:	10.07	Concentration (C_a):	9.99	%
Trial No. 3:	10.08	Tank serial #:	EB0005877	
Average (C_m) :	10.07	Expiration Date:	December 7, 2014	
Accuracy %:	0.80			

40 CFR 266 Allowable Limit - 0.5 % O_2 or 5% of span for CO

40 CFR 60 Allowable limit - 15 % average response value, ± 5 ppm, or ≤ 0.7% O_2 or CO_2

CYLINDER GAS AUDIT (CGA)
ASSESSMENT DATA SHEET

Company:	Valero Refining-Texas, L.P.	**Analyzer Info**	
Location:	Houston, TX	**Manufacturer:**	Thermo Scientific
Source:	Boiler No. 1	**Model No:**	42C
CEMS type:	NO_x	**Range (ppm):**	0 - 500 ppm
Audit Date:	March 22, 2012	**Serial No.:**	0432408934
Project No.:	12VALH172	**Personnel.:**	KF/BJ

$$\text{Accuracy} = \left(\frac{\overline{C_m} - C_a}{C_a}\right) \times 100$$

Mid Level Calibration Gas	
40 CFR 60 App. F Sources	40 CFR 266 Appendix IX Sources
Pollutant analyzers - 20 - 30 % of span	CO analyzers (200 ppm span) - 60 - 80 ppm
Oxygen analyzers - 4 - 6 % O_2	CO analyzers (3,000 ppm span) - 900 - 1200 ppm
Carbon dioxide analyzers - 5 -8 % CO_2	Oxygen analyzers - 8 - 10 % O_2

	Response			
Trial No. 1:	121.04	Gas type:	Protocol	
Trial No. 2:	124.00	Concentration (C_a):	125.60	ppm
Trial No. 3:	126.29	Tank serial #:	CC346757	
Average (C_m) :	123.78	Expiration Date:	December 15, 2013	
Accuracy %:	-1.45			

High Level Calibration Gas	
40 CFR 60 App. F Sources	40 CFR 266 Appendix IX Sources
Pollutant analyzers - 50 - 60 % of span	CO analyzers (200 ppm span) - 140 - 160 ppm
Oxygen analyzers - 8 - 12 % O_2	CO analyzers (3,000 ppm span) - 2100 - 2400 ppm
Carbon dioxide analyzers - 10 -14 % CO_2	Oxygen analyzers - 14 - 16 % O_2

	Response			
Trial No. 1:	276.63	Gas type:	Protocol	
Trial No. 2:	282.15	Concentration (C_a):	285.60	ppm
Trial No. 3:	284.00	Tank serial #:	CC329567	
Average (C_m) :	280.93	Expiration Date:	December 15, 2013	
Accuracy %:	-1.64			

40 CFR 266 Allowable Limit - 0.5 % O_2 or 5% of span for CO
40 CFR 60 Allowable limit - 15 % average response value, ± 5 ppm, or ≤ 0.7% O_2 or CO_2

CYLINDER GAS AUDIT (CGA)
ASSESSMENT DATA SHEET

Company:	Valero Refining-Texas, L.P.	**Analyzer Info**	
Location:	Houston, TX	**Manufacturer:**	Thermo Scientific
Source:	Boiler No. 1	**Model No:**	48C
CEMS type:	CO	**Range (ppm):**	0 - 500 ppm
Audit Date:	March 22, 2012	**Serial No.:**	0432408935
Project No.:	12VALH172	**Personnel.:**	KF/BJ

$$\text{Accuracy} = \left(\frac{C_m - C_a}{C_a}\right) \times 100$$

Mid Level Calibration Gas	
40 CFR 60 App. F Sources	40 CFR 266 Appendix IX Sources
Pollutant analyzers - 20 - 30 % of span	CO analyzers (200 ppm span) - 60 - 80 ppm
Oxygen analyzers - 4 - 6 % O_2	CO analyzers (3,000 ppm span) - 900 - 1200 ppm
Carbon dioxide analyzers - 5 -8 % CO_2	Oxygen analyzers - 8 - 10 % O_2

	Response			
Trial No. 1:	139.36	Gas type:	Protocol	
Trial No. 2:	139.87	Concentration (C_a):	126.60	ppm
Trial No. 3:	139.87	Tank serial #:	CC346757	
Average (C_m) :	139.70	Expiration Date:	December 15, 2013	
Accuracy %:	10.35			

High Level Calibration Gas	
40 CFR 60 App. F Sources	40 CFR 266 Appendix IX Sources
Pollutant analyzers - 50 - 60 % of span	CO analyzers (200 ppm span) - 140 - 160 ppm
Oxygen analyzers - 8 - 12 % O_2	CO analyzers (3,000 ppm span) - 2100 - 2400 ppm
Carbon dioxide analyzers - 10 -14 % CO_2	Oxygen analyzers - 14 - 16 % O_2

	Response			
Trial No. 1:	282.69	Gas type:	Protocol	
Trial No. 2:	282.99	Concentration (C_a):	279.20	ppm
Trial No. 3:	283.28	Tank serial #:	CC329567	
Average (C_m) :	282.99	Expiration Date:	December 15, 2013	
Accuracy %:	1.36			

40 CFR 266 Allowable Limit - 0.5 % O_2 or 5% of span for CO

40 CFR 60 Allowable limit - 15 % average response value, ± 5 ppm, or ≤ 0.7% O_2 or CO_2

FORM# GSC-WP004-001
REV 2010-02, EFF 8/23/11

CYLINDER GAS AUDIT (CGA)
ASSESSMENT DATA SHEET

Company: Valero
Location: Houston, TX
Source: Boiler #1
CEMS type: O2
Audit Date: 3/22/12
Project No.: 12WAH172

Analyzer Info
Manufacturer: Servomex
Model No: 1440
Range (ppm): 0-25%
Serial No.: 9659
Personnel: KSR/BS

$$\text{Accuracy} = \left(\frac{\overline{C_m} - C_a}{C_a}\right) \times 100$$

Mid Level Calibration Gas	
40 CFR 60 App. F Sources	40 CFR 266 Appendix IX Sources
Pollutant analyzers - 20 - 30 % of span	CO analyzers (200 ppm span) - 60 - 80 ppm
Oxygen analyzers - 4 - 6 % O_2	CO analyzers (3,000 ppm span) - 900 - 1200 ppm
Carbon dioxide analyzers - 5 -8 % CO_2	Oxygen analyzers - 8 - 10 % O_2

Response
Trial No. 1: 4.98
Trial No. 2: 5.02
Trial No. 3: 5.03
Average (C_m): 5.01

Gas type: Protocol
Concentration (C_a): 4.96
Tank serial #: EB0001188 ppm
Expiration Date: ~~12/6/12~~ 12/7/14 a 4/5/12

Accuracy %: ~~0.20~~ 1.01 a 4/5/12

High Level Calibration Gas	
40 CFR 60 App. F Sources	40 CFR 266 Appendix IX Sources
Pollutant analyzers - 50 - 60 % of span	CO analyzers (200 ppm span) - 140 - 160 ppm
Oxygen analyzers - 8 - 12 % O_2	CO analyzers (3,000 ppm span) - 2100 - 2400 ppm
Carbon dioxide analyzers - 10 -14 % CO_2	Oxygen analyzers - 14 - 16 % O_2

Response
Trial No. 1: 10.06
Trial No. 2: 10.07
Trial No. 3: 10.08
Average (C_m): 10.07

Gas type: Protocol
Concentration (C_a): 9.99 ppm
Tank serial #: EB0005877
Expiration Date: ~~12/6/12~~ 12/7/14 a 4/5/12

Accuracy %: 0.80

40 CFR 266 Allowable Limit - 0.5 % O_2 or 5% of span for CO
40 CFR 60 Allowable limit - 15 % average response value or +/- 5 ppm

FORM# GSC-WP004-001
REV 2010-02, EFF 8/23/11

CYLINDER GAS AUDIT (CGA)
ASSESSMENT DATA SHEET

Company: Valero
Location: Houston, TX
Source: Boiler #1
CEMS type: NOx
Audit Date: 3/22/12
Project No.: 12WAH172

Analyzer Info
Manufacturer: TELO (Thermo Scientific)
Model No: 42L
Range (ppm): 0-500
Serial No.: 0432408934
Personnel: KSR/BS

$$\text{Accuracy} = \left(\frac{C_m - C_a}{C_a}\right) \times 100$$

Mid Level Calibration Gas	
40 CFR 60 App. F Sources	40 CFR 266 Appendix IX Sources
Pollutant analyzers - 20 - 30 % of span	CO analyzers (200 ppm span) - 60 - 80 ppm
Oxygen analyzers - 4 - 6 % O_2	CO analyzers (3,000 ppm span) - 900 - 1200 ppm
Carbon dioxide analyzers - 5 -8 % CO_2	Oxygen analyzers - 8 - 10 % O_2

	Response
Trial No. 1:	121.04
Trial No. 2:	124.00
Trial No. 3:	126.29
Average (C_m) :	123.78

Gas type: Protocol
Concentration (C_a): 125.6
Tank serial #: CC346157 ppm
Expiration Date: 12/15/12

Accuracy %: -1.45

High Level Calibration Gas	
40 CFR 60 App. F Sources	40 CFR 266 Appendix IX Sources
Pollutant analyzers - 50 - 60 % of span	CO analyzers (200 ppm span) - 140 - 160 ppm
Oxygen analyzers - 8 - 12 % O_2	CO analyzers (3,000 ppm span) - 2100 - 2400 ppm
Carbon dioxide analyzers - 10 -14 % CO_2	Oxygen analyzers - 14 - 16 % O_2

	Response
Trial No. 1:	276.63
Trial No. 2:	282.15
Trial No. 3:	284.00
Average (C_m) :	~~196.26~~ 280.93 KSR 3/22/12

Gas type: Protocol
Concentration (C_a): CC379567 ppm
Tank serial #: 285.6 KSR 3/22/12
Expiration Date: 12/15/13

Accuracy %: -1.64

40 CFR 266 Allowable Limit - 0.5 % O_2 or 5% of span for CO
40 CFR 60 Allowable limit - 15 % average response value or +/- 5 ppm

FORM# GSC-WP004-001
REV 2010-02, EFF 8/23/11

CYLINDER GAS AUDIT (CGA)
ASSESSMENT DATA SHEET

Company:	Valero	**Analyzer Info**	
Location:	Houston, TX	Manufacturer:	TECO (Thermo Scientific)
Source:	Boiler #1	Model No:	48C
CEMS type:	CO	Range (ppm):	0-500
Audit Date:	3/22/12	Serial No.:	0432408935
Project No.:	12VALH172	Personnel:	[illegible]

$$\text{Accuracy} = \left(\frac{\overline{C_m} - C_a}{C_a}\right) \times 100$$

Mid Level Calibration Gas	
40 CFR 60 App. F Sources	40 CFR 266 Appendix IX Sources
Pollutant analyzers - 20 - 30 % of span	CO analyzers (200 ppm span) - 60 - 80 ppm
Oxygen analyzers - 4 - 6 % O_2	CO analyzers (3,000 ppm span) - 900 - 1200 ppm
Carbon dioxide analyzers - 5 -8 % CO_2	Oxygen analyzers - 8 - 10 % O_2

	Response		
Trial No. 1:	139.36	Gas type:	Protocol
Trial No. 2:	139.87	Concentration (C_a):	126.6
Trial No. 3:	139.87	Tank serial #:	CC346757 ppm
Average (C_m) :	139.70	Expiration Date:	12/19/13
Accuracy %:	10.35		

High Level Calibration Gas	
40 CFR 60 App. F Sources	40 CFR 266 Appendix IX Sources
Pollutant analyzers - 50 - 60 % of span	CO analyzers (200 ppm span) - 140 - 160 ppm
Oxygen analyzers - 8 - 12 % O_2	CO analyzers (3,000 ppm span) - 2100 - 2400 ppm
Carbon dioxide analyzers - 10 -14 % CO_2	Oxygen analyzers - 14 - 16 % O_2

	Response		
Trial No. 1:	282.69	Gas type:	Protocol
Trial No. 2:	282.99	Concentration (C_a):	279.2 ppm
Trial No. 3:	283.28	Tank serial #:	CC329567
Average (C_m) :	282.99	Expiration Date:	12/19/13
Accuracy %:	1.356		

40 CFR 266 Allowable Limit - 0.5 % O_2 or 5% of span for CO
40 CFR 60 Allowable limit - 15 % average response value or +/- 5 ppm

Valero Refining-Texas, L.P.
Houston Refinery
Houston, TX

Boiler No. 1

REALTIME DATA SAMPLES AND AVERAGES REPORT

Cirrus - Process Analysts, Inc.

Title:	Boiler1	cga	3/22/2012
Sample	Interval:	10 seconds	
Average	Interval:	60 seconds	

Date	Time	81BF01-O2 % dry	81BF01-NOx ppm dry	81BF01-CO ppm dry
3/22/2012	9:04:50	2.102	6.43	11.38
3/22/2012	9:05:50	2.062	6.33	14.71
3/22/2012	9:06:50	5.021	29.68	29.26
3/22/2012	9:07:50	4.987	0.94	13.46
3/22/2012	9:08:50	4.979	0.28	1.47
3/22/2012	9:09:50	9.198	15.05	18.66
3/22/2012	9:10:50	10.061	0.44	2.45
3/22/2012	9:11:50	10.072	0.00	0.00
3/22/2012	9:12:50	6.442	-0.01	0.00
3/22/2012	9:13:50	5.020	0.00	0.00
3/22/2012	9:14:50	5.014	0.00	0.00
3/22/2012	9:15:50	8.988	0.00	0.00
3/22/2012	9:16:50	10.075	0.00	0.00
3/22/2012	9:17:50	10.084	0.00	0.00
3/22/2012	9:18:50	6.496	0.00	0.00
3/22/2012	9:19:50	5.027	0.00	0.00
3/22/2012	9:20:50	5.018	0.00	-0.10
3/22/2012	9:21:50	8.715	0.00	0.00
3/22/2012	9:22:50	10.085	0.00	0.00
3/22/2012	9:23:50	10.093	0.00	0.00
3/22/2012	9:24:50	6.420	6.85	2.50
3/22/2012	9:25:50	0.029	101.42	98.35
3/22/2012	9:26:50	0.000	116.52	136.43
3/22/2012	9:27:50	0.000	119.46	139.36
3/22/2012	9:28:50	0.000	121.05	139.44
3/22/2012	9:29:50	0.655	157.41	156.72
3/22/2012	9:30:50	0.000	265.29	263.89
3/22/2012	9:31:50	0.000	276.50	282.69
3/22/2012	9:32:50	0.000	279.63	283.85
3/22/2012	9:33:50	0.000	205.80	237.98
3/22/2012	9:34:50	0.000	124.86	150.15
3/22/2012	9:35:50	0.000	124.78	140.27
3/22/2012	9:36:50	0.000	140.08	150.65
3/22/2012	9:37:50	0.000	126.44	154.82
3/22/2012	9:38:50	0.000	124.00	141.35
3/22/2012	9:39:50	0.000	124.70	139.88
3/22/2012	9:40:50	0.000	184.74	175.83
3/22/2012	9:41:50	0.000	278.42	272.30
3/22/2012	9:42:50	0.000	282.15	282.99
3/22/2012	9:43:50	0.000	283.52	283.65
3/22/2012	9:44:50	0.000	210.49	237.26
3/22/2012	9:45:50	0.000	126.53	150.14

Valero Refining-Texas, L.P.
Houston Refinery
Houston, TX

Boiler No. 1

REALTIME DATA SAMPLES AND AVERAGES REPORT
Cirrus - Process Analysts, Inc.

Title:	Boiler1	cga	3/22/2012
Sample	Interval:	10 seconds	
Average	Interval:	60 seconds	

Date	Time	81BF01-O2 % dry	81BF01-NOx ppm dry	81BF01-CO ppm dry
3/22/2012	9:46:50	0.000	126.28	140.36
3/22/2012	9:47:50	0.000	126.30	139.87
3/22/2012	9:48:50	0.000	125.87	140.04
3/22/2012	9:49:50	0.000	191.48	180.21
3/22/2012	9:50:50	0.000	281.55	273.11
3/22/2012	9:51:50	0.000	284.01	283.29
3/22/2012	9:52:50	0.000	284.92	283.69
3/22/2012	9:53:50	1.199	198.41	236.44
3/22/2012	9:54:50	2.041	8.42	57.55

APPENDIX C – Boiler No. 2 CGA Results

CYLINDER GAS AUDIT (CGA)
ASSESSMENT DATA SHEET

Company:	Valero Refining-Texas, L.P.	**Analyzer Info**	
Location:	Houston, TX	**Manufacturer:**	Servomex
Source:	Boiler No. 2	**Model No:**	1440
CEMS type:	O_2	**Range (%):**	0 - 25 %
Audit Date:	March 22, 2012	**Serial No.:**	3696
Project No.:	12VALH172	**Personnel.:**	KF/BJ

$$\text{Accuracy} = \left(\frac{C_m - C_a}{C_a} \right) \times 100$$

Mid Level Calibration Gas	
40 CFR 60 App. F Sources	40 CFR 266 Appendix IX Sources
Pollutant analyzers - 20 - 30 % of span	CO analyzers (200 ppm span) - 60 - 80 ppm
Oxygen analyzers - 4 - 6 % O_2	CO analyzers (3,000 ppm span) - 900 - 1200 ppm
Carbon dioxide analyzers - 5 -8 % CO_2	Oxygen analyzers - 8 - 10 % O_2

	Response			
Trial No. 1:	4.97	Gas type:	Protocol	
Trial No. 2:	4.99	Concentration (C_a):	4.96	%
Trial No. 3:	4.99	Tank serial #:	EB0001188	
Average (C_m) :	4.98	Expiration Date:	December 7, 2014	
Accuracy %:	0.47			

High Level Calibration Gas	
40 CFR 60 App. F Sources	40 CFR 266 Appendix IX Sources
Pollutant analyzers - 50 - 60 % of span	CO analyzers (200 ppm span) - 140 - 160 ppm
Oxygen analyzers - 8 - 12 % O_2	CO analyzers (3,000 ppm span) - 2100 - 2400 ppm
Carbon dioxide analyzers - 10 -14 % CO_2	Oxygen analyzers - 14 - 16 % O_2

	Response			
Trial No. 1:	10.04	Gas type:	Protocol	
Trial No. 2:	10.04	Concentration (C_a):	9.99	%
Trial No. 3:	10.04	Tank serial #:	EB0005877	
Average (C_m) :	10.04	Expiration Date:	December 7, 2014	
Accuracy %:	0.50			

40 CFR 266 Allowable Limit - 0.5 % O_2 or 5% of span for CO

40 CFR 60 Allowable limit - 15 % average response value, ± 5 ppm, or ≤ 0.7% O_2 or CO_2

CYLINDER GAS AUDIT (CGA)
ASSESSMENT DATA SHEET

Company:	Valero Refining-Texas, L.P.	**Analyzer Info**	
Location:	Houston, TX	**Manufacturer:**	Thermo Scientific
Source:	Boiler No. 2	**Model No:**	42C
CEMS type:	NO_x	**Range (ppm):**	0 - 500 ppm
Audit Date:	March 22, 2012	**Serial No.:**	0505310679
Project No.:	12VALH172	**Personnel.:**	KF/BJ

$$\text{Accuracy} = \left(\frac{\overline{C_m} - C_a}{C_a}\right) \times 100$$

Mid Level Calibration Gas	
40 CFR 60 App. F Sources	40 CFR 266 Appendix IX Sources
Pollutant analyzers - 20 - 30 % of span	CO analyzers (200 ppm span) - 60 - 80 ppm
Oxygen analyzers - 4 - 6 % O_2	CO analyzers (3,000 ppm span) - 900 - 1200 ppm
Carbon dioxide analyzers - 5 -8 % CO_2	Oxygen analyzers - 8 - 10 % O_2

	Response			
Trial No. 1:	113.92	Gas type:	Protocol	
Trial No. 2:	115.81	Concentration (C_a):	125.60	ppm
Trial No. 3:	116.90	Tank serial #:	CC346757	
Average (C_m) :	115.54	Expiration Date:	December 15, 2013	
Accuracy %:	-8.01			

High Level Calibration Gas	
40 CFR 60 App. F Sources	40 CFR 266 Appendix IX Sources
Pollutant analyzers - 50 - 60 % of span	CO analyzers (200 ppm span) - 140 - 160 ppm
Oxygen analyzers - 8 - 12 % O_2	CO analyzers (3,000 ppm span) - 2100 - 2400 ppm
Carbon dioxide analyzers - 10 -14 % CO_2	Oxygen analyzers - 14 - 16 % O_2

	Response			
Trial No. 1:	272.46	Gas type:	Protocol	
Trial No. 2:	275.04	Concentration (C_a):	285.60	ppm
Trial No. 3:	276.23	Tank serial #:	CC329567	
Average (C_m) :	274.58	Expiration Date:	December 15, 2013	
Accuracy %:	-3.86			

40 CFR 266 Allowable Limit - 0.5 % O_2 or 5% of span for CO

40 CFR 60 Allowable limit - 15 % average response value, ± 5 ppm, or ≤ 0.7% O_2 or CO_2

CYLINDER GAS AUDIT (CGA)
ASSESSMENT DATA SHEET

Company:	Valero Refining-Texas, L.P.	**Analyzer Info**	
Location:	Houston, TX	**Manufacturer:**	Thermo Scientific
Source:	Boiler No. 2	**Model No:**	48C
CEMS type:	CO	**Range (ppm):**	0 - 500 ppm
Audit Date:	March 22, 2012	**Serial No.:**	0505310682
Project No.:	12VALH172	**Personnel.:**	KF/BJ

$$\text{Accuracy} = \left(\frac{\overline{C_m} - C_a}{C_a}\right) \times 100$$

Mid Level Calibration Gas	
40 CFR 60 App. F Sources	40 CFR 266 Appendix IX Sources
Pollutant analyzers - 20 - 30 % of span	CO analyzers (200 ppm span) - 60 - 80 ppm
Oxygen analyzers - 4 - 6 % O_2	CO analyzers (3,000 ppm span) - 900 - 1200 ppm
Carbon dioxide analyzers - 5 -8 % CO_2	Oxygen analyzers - 8 - 10 % O_2

	Response			
Trial No. 1:	132.83	Gas type:	Protocol	
Trial No. 2:	129.07	Concentration (C_a):	126.60	ppm
Trial No. 3:	127.98	Tank serial #:	CC346757	
Average (C_m) :	129.96	Expiration Date:	December 15, 2013	
Accuracy %:	2.65			

High Level Calibration Gas	
40 CFR 60 App. F Sources	40 CFR 266 Appendix IX Sources
Pollutant analyzers - 50 - 60 % of span	CO analyzers (200 ppm span) - 140 - 160 ppm
Oxygen analyzers - 8 - 12 % O_2	CO analyzers (3,000 ppm span) - 2100 - 2400 ppm
Carbon dioxide analyzers - 10 -14 % CO_2	Oxygen analyzers - 14 - 16 % O_2

	Response			
Trial No. 1:	302.23	Gas type:	Protocol	
Trial No. 2:	301.46	Concentration (C_a):	279.20	ppm
Trial No. 3:	299.61	Tank serial #:	CC329567	
Average (C_m) :	301.10	Expiration Date:	December 15, 2013	
Accuracy %:	7.84			

40 CFR 266 Allowable Limit - 0.5 % O_2 or 5% of span for CO

40 CFR 60 Allowable limit - 15 % average response value, ± 5 ppm, or ≤ 0.7% O_2 or CO_2

FORM# GSC-WP004-001
REV 2010-02, EFF 8/23/11

CYLINDER GAS AUDIT (CGA)
ASSESSMENT DATA SHEET

Company: Valero
Location: Houston, TX
Source: Boiler #2
CEMS type: O_2
Audit Date: 3/22/12
Project No.: 12VAL4172

Analyzer Info
Manufacturer: Servomex
Model No: 1440
Range (ppm): 0-25%
Serial No.: 2896
Personnel: KSR/DS

$$\text{Accuracy} = \left(\frac{\overline{C_m} - C_a}{C_a}\right) \times 100$$

Mid Level Calibration Gas	
40 CFR 60 App. F Sources	40 CFR 266 Appendix IX Sources
Pollutant analyzers - 20 - 30 % of span	CO analyzers (200 ppm span) - 60 - 80 ppm
Oxygen analyzers - 4 - 6 % O_2	CO analyzers (3,000 ppm span) - 900 - 1200 ppm
Carbon dioxide analyzers - 5 -8 % CO_2	Oxygen analyzers - 8 - 10 % O_2

	Response
Trial No. 1:	4.97
Trial No. 2:	4.99
Trial No. 3:	4.99
Average (C_m) :	4.98
Accuracy %:	0.47

Gas type: Protocol
Concentration (C_a): 4.96
Tank serial #: CB9061188 ppm
Expiration Date: ~~12/6/12~~ 12/7/14 a-4/5/12

High Level Calibration Gas	
40 CFR 60 App. F Sources	40 CFR 266 Appendix IX Sources
Pollutant analyzers - 50 - 60 % of span	CO analyzers (200 ppm span) - 140 - 160 ppm
Oxygen analyzers - 8 - 12 % O_2	CO analyzers (3,000 ppm span) - 2100 - 2400 ppm
Carbon dioxide analyzers - 10 -14 % CO_2	Oxygen analyzers - 14 - 16 % O_2

	Response
Trial No. 1:	10.04
Trial No. 2:	10.04
Trial No. 3:	10.04
Average (C_m) :	10.04
Accuracy %:	0.50

Gas type: Protocol
Concentration (C_a): 9.99 ppm
Tank serial #: EB0005877
Expiration Date: ~~12/6/12~~ 12/7/14 a-4/5/12

40 CFR 266 Allowable Limit - 0.5 % O_2 or 5% of span for CO
40 CFR 60 Allowable limit - 15 % average response value or +/- 5 ppm

FORM# GSC-WP004-001
REV 2010-02, EFF 8/23/11

CYLINDER GAS AUDIT (CGA)
ASSESSMENT DATA SHEET

Company: Valero
Location: Houston, TX
Source: Boiler #2
CEMS type: NOx
Audit Date: 3/22/12
Project No.: 12VALH02

Analyzer Info
Manufacturer: TECO (Thermo Scientific)
Model No: 42C
Range (ppm): 0-500
Serial No.: 0505310619
Personnel: KSK/BJ

$$\text{Accuracy} = \left(\frac{\overline{C_m} - C_a}{C_a} \right) \times 100$$

Mid Level Calibration Gas	
40 CFR 60 App. F Sources	40 CFR 266 Appendix IX Sources
Pollutant analyzers - 20 - 30 % of span	CO analyzers (200 ppm span) - 60 - 80 ppm
Oxygen analyzers - 4 - 6 % O_2	CO analyzers (3,000 ppm span) - 900 - 1200 ppm
Carbon dioxide analyzers - 5 -8 % CO_2	Oxygen analyzers - 8 - 10 % O_2

	Response
Trial No. 1:	113.92
Trial No. 2:	115.81
Trial No. 3:	116.90
Average (C_m) :	115.54

Gas type: Protocol
Concentration (C_a): 125.6 ppm
Tank serial #: CC346757
Expiration Date: 12/15/13

Accuracy %: -8.01

High Level Calibration Gas	
40 CFR 60 App. F Sources	40 CFR 266 Appendix IX Sources
Pollutant analyzers - 50 - 60 % of span	CO analyzers (200 ppm span) - 140 - 160 ppm
Oxygen analyzers - 8 - 12 % O_2	CO analyzers (3,000 ppm span) - 2100 - 2400 ppm
Carbon dioxide analyzers - 10 -14 % CO_2	Oxygen analyzers - 14 - 16 % O_2

	Response
Trial No. 1:	272.46
Trial No. 2:	275.04
Trial No. 3:	276.23
Average (C_m) :	274.58

Gas type: Protocol
Concentration (C_a): 285.6 ppm
Tank serial #: CC329567
Expiration Date: 12/15/13

Accuracy %: -3.86

40 CFR 266 Allowable Limit - 0.5 % O_2 or 5% of span for CO
40 CFR 60 Allowable limit - 15 % average response value or +/- 5 ppm

FORM# GSC-WP004-001
REV 2010-02, EFF 8/23/11

CYLINDER GAS AUDIT (CGA)
ASSESSMENT DATA SHEET

Company:	Valero	**Analyzer Info**	
Location:	Houston, TX	Manufacturer:	TECO (Thermo Scientific)
Source:	Boiler #2	Model No:	48C
CEMS type:	CO	Range (ppm):	0-500
Audit Date:	3/22/12	Serial No.:	0505310682
Project No.:	12VALH172	Personnel:	KJK/BJ

$$\text{Accuracy} = \left(\frac{\overline{C_m} - C_a}{C_a}\right) \times 100$$

Mid Level Calibration Gas	
40 CFR 60 App. F Sources	40 CFR 266 Appendix IX Sources
Pollutant analyzers - 20 - 30 % of span	CO analyzers (200 ppm span) - 60 - 80 ppm
Oxygen analyzers - 4 - 6 % O_2	CO analyzers (3,000 ppm span) - 900 - 1200 ppm
Carbon dioxide analyzers - 5 -8 % CO_2	Oxygen analyzers - 8 - 10 % O_2

	Response		
Trial No. 1:	132.93	Gas type:	Protocol
Trial No. 2:	129.07	Concentration (C_a):	126.8
Trial No. 3:	127.98	Tank serial #:	CC346757 ppm
Average (C_m) :	129.~~39~~96	Expiration Date:	~~12/8/12~~ 12/15/13
Accuracy %:	2.65		

High Level Calibration Gas	
40 CFR 60 App. F Sources	40 CFR 266 Appendix IX Sources
Pollutant analyzers - 50 - 60 % of span	CO analyzers (200 ppm span) - 140 - 160 ppm
Oxygen analyzers - 8 - 12 % O_2	CO analyzers (3,000 ppm span) - 2100 - 2400 ppm
Carbon dioxide analyzers - 10 -14 % CO_2	Oxygen analyzers - 14 - 16 % O_2

	Response		
Trial No. 1:	302.23	Gas type:	Protocol
Trial No. 2:	301.46	Concentration (C_a):	279.2 ppm
Trial No. 3:	299.61	Tank serial #:	CC329567
Average (C_m) :	301.1	Expiration Date:	12/15/13
Accuracy %:	7.84		

40 CFR 266 Allowable Limit - 0.5 % O_2 or 5% of span for CO
40 CFR 60 Allowable limit - 15 % average response value or +/- 5 ppm

Valero Refining-Texas, L.P.
Houston Refinery
Houston, TX

Boiler No. 2

REALTIME DATA SAMPLES AND AVERAGES REPORT

Cirrus - Process Analysts, Inc.

Title: BF02 CGA 3/22/2012
Sample Interval: 10 seconds
Average Interval: 60 seconds

Date	Time	50BF02-O2 % dry	50BF02-NOx ppm dry	50BF02-CO ppm dry
3/22/2012	11:19:30	4.979	0.01	1.24
3/22/2012	11:20:30	4.982	0.01	0.48
3/22/2012	11:21:30	4.980	0.00	0.48
3/22/2012	11:22:30	7.983	1.26	3.03
3/22/2012	11:23:30	10.021	1.09	2.26
3/22/2012	11:24:30	10.038	0.01	1.06
3/22/2012	11:25:30	6.025	0.02	1.00
3/22/2012	11:26:30	4.999	0.01	1.16
3/22/2012	11:27:30	4.996	0.02	1.32
3/22/2012	11:28:30	7.468	0.01	0.98
3/22/2012	11:29:30	10.024	0.02	0.57
3/22/2012	11:30:30	10.037	0.00	0.47
3/22/2012	11:31:30	6.456	0.00	0.48
3/22/2012	11:32:30	4.999	0.02	0.48
3/22/2012	11:33:30	5.003	0.00	0.49
3/22/2012	11:34:30	9.644	0.01	0.49
3/22/2012	11:35:30	10.041	0.01	0.49
3/22/2012	11:36:30	10.038	0.02	0.47
3/22/2012	11:37:30	6.384	0.01	0.47
3/22/2012	11:38:30	4.959	0.33	2.34
3/22/2012	11:39:30	0.268	45.83	52.33
3/22/2012	11:40:30	0.000	111.96	98.63
3/22/2012	11:41:30	0.000	113.19	98.14
3/22/2012	11:42:30	0.000	113.58	122.89
3/22/2012	11:43:30	0.000	113.92	132.83
3/22/2012	11:44:30	0.000	114.34	133.65
3/22/2012	11:45:30	0.270	127.67	158.99
3/22/2012	11:46:30	0.000	255.43	301.62
3/22/2012	11:47:30	0.000	271.89	306.86
3/22/2012	11:48:30	0.000	272.46	302.23
3/22/2012	11:49:30	0.000	272.96	306.96
3/22/2012	11:50:30	0.000	239.58	251.08
3/22/2012	11:51:30	0.000	119.60	133.16
3/22/2012	11:52:30	0.000	115.81	129.08
3/22/2012	11:53:30	0.000	115.91	129.00
3/22/2012	11:54:30	0.000	175.98	213.29
3/22/2012	11:55:30	0.000	273.06	298.83
3/22/2012	11:56:30	0.000	275.04	301.46
3/22/2012	11:57:30	0.000	216.47	215.51
3/22/2012	11:58:30	0.000	118.24	131.73
3/22/2012	11:59:30	0.000	116.98	128.65
3/22/2012	12:00:30	0.000	116.90	127.98

Valero Refining-Texas, L.P.
Houston Refinery
Houston, TX

Boiler No. 2

REALTIME DATA SAMPLES AND AVERAGES REPORT
Cirrus - Process Analysts, Inc.

Title:	BF02	CGA	3/22/2012
Sample	Interval:	10 seconds	
Average	Interval:	60 seconds	

Date	Time	50BF02-O2 % dry	50BF02-NOx ppm dry	50BF02-CO ppm dry
3/22/2012	12:01:30	0.000	116.98	130.85
3/22/2012	12:02:30	0.000	219.79	251.25
3/22/2012	12:03:30	0.000	275.56	297.98
3/22/2012	12:04:30	0.000	276.23	299.61
3/22/2012	12:05:30	0.000	276.07	288.17

GOLDEN SPECIALTY

Air Quality Test Report

APPENDIX D – Boiler No. 3 CGA Results

CYLINDER GAS AUDIT (CGA)
ASSESSMENT DATA SHEET

Company:	Valero Refining-Texas, L.P.	**Analyzer Info**	
Location:	Houston, TX	**Manufacturer:**	Servomex
Source:	Boiler No. 3	**Model No:**	1440
CEMS type:	O_2	**Range (%):**	0 - 25 %
Audit Date:	March 22, 2012	**Serial No.:**	3693
Project No.:	12VALH172	**Personnel.:**	DL/KF/BJ

$$\text{Accuracy} = \left(\frac{\overline{C_m} - C_a}{C_a} \right) \times 100$$

Mid Level Calibration Gas	
40 CFR 60 App. F Sources	40 CFR 266 Appendix IX Sources
Pollutant analyzers - 20 - 30 % of span	CO analyzers (200 ppm span) - 60 - 80 ppm
Oxygen analyzers - 4 - 6 % O_2	CO analyzers (3,000 ppm span) - 900 - 1200 ppm
Carbon dioxide analyzers - 5 -8 % CO_2	Oxygen analyzers - 8 - 10 % O_2

	Response			
Trial No. 1:	4.96	Gas type:	Protocol	
Trial No. 2:	4.97	Concentration (C_a):	4.96	%
Trial No. 3:	4.98	Tank serial #:	EB0001158	
Average (C_m) :	4.97	Expiration Date:	December 7, 2014	
Accuracy %:	0.20			

High Level Calibration Gas	
40 CFR 60 App. F Sources	40 CFR 266 Appendix IX Sources
Pollutant analyzers - 50 - 60 % of span	CO analyzers (200 ppm span) - 140 - 160 ppm
Oxygen analyzers - 8 - 12 % O_2	CO analyzers (3,000 ppm span) - 2100 - 2400 ppm
Carbon dioxide analyzers - 10 -14 % CO_2	Oxygen analyzers - 14 - 16 % O_2

	Response			
Trial No. 1:	9.96	Gas type:	Protocol	
Trial No. 2:	9.98	Concentration (C_a):	9.99	%
Trial No. 3:	9.95	Tank serial #:	EB0005877	
Average (C_m) :	9.96	Expiration Date:	December 7, 2014	
Accuracy %:	-0.27			

40 CFR 266 Allowable Limit - 0.5 % O_2 or 5% of span for CO

40 CFR 60 Allowable limit - 15 % average response value, ± 5 ppm, or ≤ 0.7% O_2 or CO_2

CYLINDER GAS AUDIT (CGA)
ASSESSMENT DATA SHEET

Company:	Valero Refining-Texas, L.P.	**Analyzer Info**	
Location:	Houston, TX	**Manufacturer:**	Thermo Scientific
Source:	Boiler No. 3	**Model No:**	42C
CEMS type:	NO_x	**Range (ppm):**	0 - 500 ppm
Audit Date:	March 22, 2012	**Serial No.:**	0530613423
Project No.:	12VALH172	**Personnel.:**	DL/KF/BJ

$$\text{Accuracy} = \left(\frac{\overline{C_m} - C_a}{C_a}\right) \times 100$$

Mid Level Calibration Gas	
40 CFR 60 App. F Sources	40 CFR 266 Appendix IX Sources
Pollutant analyzers - 20 - 30 % of span	CO analyzers (200 ppm span) - 60 - 80 ppm
Oxygen analyzers - 4 - 6 % O_2	CO analyzers (3,000 ppm span) - 900 - 1200 ppm
Carbon dioxide analyzers - 5 -8 % CO_2	Oxygen analyzers - 8 - 10 % O_2

	Response			
Trial No. 1:	123.30	Gas type:	Protocol	
Trial No. 2:	123.80	Concentration (C_a):	125.60	ppm
Trial No. 3:	124.10	Tank serial #:	CC346257	
Average (C_m) :	123.73	Expiration Date:	December 15, 2013	
Accuracy %:	-1.49			

High Level Calibration Gas	
40 CFR 60 App. F Sources	40 CFR 266 Appendix IX Sources
Pollutant analyzers - 50 - 60 % of span	CO analyzers (200 ppm span) - 140 - 160 ppm
Oxygen analyzers - 8 - 12 % O_2	CO analyzers (3,000 ppm span) - 2100 - 2400 ppm
Carbon dioxide analyzers - 10 -14 % CO_2	Oxygen analyzers - 14 - 16 % O_2

	Response			
Trial No. 1:	266.70	Gas type:	Protocol	
Trial No. 2:	266.90	Concentration (C_a):	285.60	ppm
Trial No. 3:	268.80	Tank serial #:	CC329567	
Average (C_m) :	267.47	Expiration Date:	December 15, 2013	
Accuracy %:	-6.35			

40 CFR 266 Allowable Limit - 0.5 % O_2 or 5% of span for CO

40 CFR 60 Allowable limit - 15 % average response value, ± 5 ppm, or ≤ 0.7% O_2 or CO_2

CYLINDER GAS AUDIT (CGA)
ASSESSMENT DATA SHEET

Company:	Valero Refining-Texas, L.P.	**Analyzer Info**	
Location:	Houston, TX	**Manufacturer:**	Thermo Scientific
Source:	Boiler No. 3	**Model No:**	48C
CEMS type:	CO	**Range (ppm):**	0 - 500 ppm
Audit Date:	March 22, 2012	**Serial No.:**	0530613424
Project No.:	12VALH172	**Personnel.:**	DL/KF/BJ

$$\text{Accuracy} = \left(\frac{\overline{C_m} - C_a}{C_a}\right) \times 100$$

Mid Level Calibration Gas	
40 CFR 60 App. F Sources	40 CFR 266 Appendix IX Sources
Pollutant analyzers - 20 - 30 % of span	CO analyzers (200 ppm span) - 60 - 80 ppm
Oxygen analyzers - 4 - 6 % O_2	CO analyzers (3,000 ppm span) - 900 - 1200 ppm
Carbon dioxide analyzers - 5 -8 % CO_2	Oxygen analyzers - 8 - 10 % O_2

	Response			
Trial No. 1:	138.10	Gas type:	Protocol	
Trial No. 2:	139.80	Concentration (C_a):	126.60	ppm
Trial No. 3:	140.60	Tank serial #:	CC346257	
Average (C_m) :	139.50	Expiration Date:	December 15, 2013	
Accuracy %:	10.19			

High Level Calibration Gas	
40 CFR 60 App. F Sources	40 CFR 266 Appendix IX Sources
Pollutant analyzers - 50 - 60 % of span	CO analyzers (200 ppm span) - 140 - 160 ppm
Oxygen analyzers - 8 - 12 % O_2	CO analyzers (3,000 ppm span) - 2100 - 2400 ppm
Carbon dioxide analyzers - 10 -14 % CO_2	Oxygen analyzers - 14 - 16 % O_2

	Response			
Trial No. 1:	266.70	Gas type:	Protocol	
Trial No. 2:	266.90	Concentration (C_a):	279.20	ppm
Trial No. 3:	268.80	Tank serial #:	CC329567	
Average (C_m) :	267.47	Expiration Date:	December 15, 2013	
Accuracy %:	-4.20			

40 CFR 266 Allowable Limit - 0.5 % O_2 or 5% of span for CO

40 CFR 60 Allowable limit - 15 % average response value, ± 5 ppm, or ≤ 0.7% O_2 or CO_2

FORM# GSC-WP004-001
REV 2010-02, EFF 8/23/11

CYLINDER GAS AUDIT (CGA)
ASSESSMENT DATA SHEET

Company: Valero
Location: Houston, TX
Source: Boiler #3
CEMS type: O2
Audit Date: 3/22/12
Project No.: 12WA-HH2

Analyzer Info
Manufacturer: Servomex
Model No: 1440
Range (ppm): 0-25%
Serial No.: 3693
Personnel: KSR/BJ/DL

$$\text{Accuracy} = \left(\frac{\overline{C_m} - C_a}{C_a}\right) \times 100$$

Mid Level Calibration Gas	
40 CFR 60 App. F Sources	40 CFR 266 Appendix IX Sources
Pollutant analyzers - 20 - 30 % of span	CO analyzers (200 ppm span) - 60 - 80 ppm
Oxygen analyzers - 4 - 6 % O_2	CO analyzers (3,000 ppm span) - 900 - 1200 ppm
Carbon dioxide analyzers - 5 -8 % CO_2	Oxygen analyzers - 8 - 10 % O_2

	Response
Trial No. 1:	4.96
Trial No. 2:	4.97
Trial No. 3:	4.98
Average (C_m) :	4.97
Accuracy %:	0.20

Gas type: Protocol
Concentration (C_a): 4.96
Tank serial #: EB0001158 ppm
Expiration Date: ~~12/6/12~~ 04/5/12
12/7/14

High Level Calibration Gas	
40 CFR 60 App. F Sources	40 CFR 266 Appendix IX Sources
Pollutant analyzers - 50 - 60 % of span	CO analyzers (200 ppm span) - 140 - 160 ppm
Oxygen analyzers - 8 - 12 % O_2	CO analyzers (3,000 ppm span) - 2100 - 2400 ppm
Carbon dioxide analyzers - 10 -14 % CO_2	Oxygen analyzers - 14 - 16 % O_2

	Response
Trial No. 1:	9.96
Trial No. 2:	9.98
Trial No. 3:	9.95
Average (C_m) :	9.96
Accuracy %:	-0.27

Gas type: Protocol
Concentration (C_a): 9.99 ppm
Tank serial #: EB0005877
Expiration Date: ~~12/6/12~~ 04/5/12
12/7/14

40 CFR 266 Allowable Limit - 0.5 % O_2 or 5% of span for CO
40 CFR 60 Allowable limit - 15 % average response value or +/- 5 ppm

FORM# GSC-WP004-001
REV 2010-02, EFF 8/23/11

CYLINDER GAS AUDIT (CGA)
ASSESSMENT DATA SHEET

Company:	Valero	**Analyzer Info**	
Location:	Houston, TX	Manufacturer:	TECO (Thermo Scientific)
Source:	Boiler #3	Model No:	42C
CEMS type:	NOx	Range (ppm):	0-500
Audit Date:	3/12/12	Serial No.:	0530613423
Project No.:	12VAH172	Personnel:	KJK/BJT/DL

$$\text{Accuracy} = \left(\frac{C_m - C_a}{C_a}\right) \times 100$$

Mid Level Calibration Gas	
40 CFR 60 App. F Sources	40 CFR 266 Appendix IX Sources
Pollutant analyzers - 20 - 30 % of span	CO analyzers (200 ppm span) - 60 - 80 ppm
Oxygen analyzers - 4 - 6 % O_2	CO analyzers (3,000 ppm span) - 900 - 1200 ppm
Carbon dioxide analyzers - 5 -8 % CO_2	Oxygen analyzers - 8 - 10 % O_2

	Response		
Trial No. 1:	~~138.1~~ 123.3 KJK 3/22/12	Gas type:	Protocol
Trial No. 2:	~~139.8~~ 123.8	Concentration (C_a):	125.6
Trial No. 3:	~~140.6~~ 124.1	Tank serial #:	CC346257 ppm
Average (C_m) :	123.73	Expiration Date:	12/15/12
Accuracy %:	~~-1.56~~ -1.49 R 4/6/12		

High Level Calibration Gas	
40 CFR 60 App. F Sources	40 CFR 266 Appendix IX Sources
Pollutant analyzers - 50 - 60 % of span	CO analyzers (200 ppm span) - 140 - 160 ppm
Oxygen analyzers - 8 - 12 % O_2	CO analyzers (3,000 ppm span) - 2100 - 2400 ppm
Carbon dioxide analyzers - 10 -14 % CO_2	Oxygen analyzers - 14 - 16 % O_2

	Response		
Trial No. 1:	266.7	Gas type:	Protocol
Trial No. 2:	266.9	Concentration (C_a):	285.6 ppm
Trial No. 3:	268.8	Tank serial #:	CC329567
Average (C_m) :	267.44	Expiration Date:	12/15/12
Accuracy %:	-6.35		

40 CFR 266 Allowable Limit - 0.5 % O_2 or 5% of span for CO
40 CFR 60 Allowable limit - 15 % average response value or +/- 5 ppm

FORM# GSC-WP004-001
REV 2010-02, EFF 8/23/11

CYLINDER GAS AUDIT (CGA) ASSESSMENT DATA SHEET

Company:	Valero	**Analyzer Info**	
Location:	Houston, TX	Manufacturer:	TECO (Thermo Scientific)
Source:	Boiler #3	Model No:	48C
CEMS type:	CO	Range (ppm):	0-500
Audit Date:	3/22/12	Serial No.:	0530613424
Project No.:	12VALH172	Personnel:	KJR/BJ/DL

$$\text{Accuracy} = \left(\frac{\overline{C_m} - C_a}{C_a}\right) \times 100$$

Mid Level Calibration Gas	
40 CFR 60 App. F Sources	40 CFR 266 Appendix IX Sources
Pollutant analyzers - 20 - 30 % of span	CO analyzers (200 ppm span) - 60 - 80 ppm
Oxygen analyzers - 4 - 6 % O_2	CO analyzers (3,000 ppm span) - 900 - 1200 ppm
Carbon dioxide analyzers - 5 -8 % CO_2	Oxygen analyzers - 8 - 10 % O_2

	Response		
Trial No. 1:	138.1	Gas type:	Protocol
Trial No. 2:	139.8	Concentration (C_a):	~~[illegible]~~ 126.6 KJR 3/22/12
Trial No. 3:	140.6	Tank serial #:	CC346357 ppm
Average (C_m) :	139.5	Expiration Date:	12/15/13
Accuracy %:	10.19		

High Level Calibration Gas	
40 CFR 60 App. F Sources	40 CFR 266 Appendix IX Sources
Pollutant analyzers - 50 - 60 % of span	CO analyzers (200 ppm span) - 140 - 160 ppm
Oxygen analyzers - 8 - 12 % O_2	CO analyzers (3,000 ppm span) - 2100 - 2400 ppm
Carbon dioxide analyzers - 10 -14 % CO_2	Oxygen analyzers - 14 - 16 % O_2

	Response KJR 3/22/12		
Trial No. 1:	~~266.~~ 266.7	Gas type:	Protocol
Trial No. 2:	266.9	Concentration (C_a):	279.2 ppm
Trial No. 3:	268.8	Tank serial #:	CC329567
Average (C_m) :	267.47	Expiration Date:	~~12/8/12~~ 4/5/12 12/15/13
Accuracy %:	-4.2		

40 CFR 266 Allowable Limit - 0.5 % O_2 or 5% of span for CO
40 CFR 60 Allowable limit - 15 % average response value or +/- 5 ppm

Valero Refining-Texas, L.P.
Houston Refinery
Houston, TX

Boiler No. 3

REALTIME DATA SAMPLES AND AVERAGES REPORT

Cirrus - Process Analysts, Inc.

Title: BF03 CGA 3/22/2012
Sample Interval: 10 seconds
Average Interval: 60 seconds

Date	% Time	50BF03-O2	50BF03-NOx ppm	50BF03-CO dry
3/22/2012	12:08:30	3.831	4.65	35.40
3/22/2012	12:09:30	3.750	4.42	45.89
3/22/2012	12:10:30	4.746	10.35	51.73
3/22/2012	12:11:30	4.957	2.82	21.12
3/22/2012	12:12:30	4.957	0.00	0.24
3/22/2012	12:13:30	5.030	0.01	0.20
3/22/2012	12:14:30	9.871	7.04	6.43
3/22/2012	12:15:30	9.975	0.00	0.21
3/22/2012	12:16:30	9.981	0.00	0.00
3/22/2012	12:17:30	5.348	0.01	0.00
3/22/2012	12:18:30	4.970	0.01	0.00
3/22/2012	12:19:30	5.017	0.01	0.00
3/22/2012	12:20:30	9.852	0.00	0.00
3/22/2012	12:21:30	9.980	0.02	0.00
3/22/2012	12:22:30	9.986	0.01	0.00
3/22/2012	12:23:30	8.160	0.01	0.00
3/22/2012	12:24:30	4.983	0.00	0.00
3/22/2012	12:25:30	5.583	0.00	0.00
3/22/2012	12:26:30	9.946	0.01	0.00
3/22/2012	12:27:30	9.982	0.01	0.00
3/22/2012	12:28:30	8.774	0.00	0.00
3/22/2012	12:29:30	4.701	3.81	7.26
3/22/2012	12:30:30	0.264	226.69	177.99
3/22/2012	12:31:30	0.000	124.03	166.33
3/22/2012	12:32:30	0.000	123.78	149.53
3/22/2012	12:33:30	0.000	123.45	146.56
3/22/2012	12:34:30	0.000	123.28	143.25
3/22/2012	12:35:30	0.000	123.28	138.09
3/22/2012	12:36:30	0.000	160.58	149.37
3/22/2012	12:37:30	0.000	275.28	248.97
3/22/2012	12:38:30	0.000	280.38	266.50
3/22/2012	12:39:30	0.000	280.61	266.75
3/22/2012	12:40:30	0.000	281.20	267.03
3/22/2012	12:41:30	0.000	147.46	186.63
3/22/2012	12:42:30	0.000	124.29	140.05
3/22/2012	12:43:30	0.000	123.78	139.79
3/22/2012	12:44:30	0.000	123.78	140.03
3/22/2012	12:45:30	0.000	252.59	219.65
3/22/2012	12:46:30	0.000	280.54	267.10
3/22/2012	12:47:30	0.000	281.19	266.92
3/22/2012	12:48:30	0.000	271.42	264.22
3/22/2012	12:49:30	0.000	126.05	159.71

Valero Refining-Texas, L.P.
Houston Refinery
Houston, TX

Boiler No. 3

REALTIME DATA SAMPLES AND AVERAGES REPORT
Cirrus - Process Analysts, Inc.

Title: BF03 CGA 3/22/2012
Sample Interval: 10 seconds
Average Interval: 60 seconds

Date	% Time	50BF03-O2	50BF03-NOx ppm	50BF03-CO dry
3/22/2012	12:50:30	0.000	124.36	139.78
3/22/2012	12:51:30	0.000	124.11	140.56
3/22/2012	12:52:30	0.000	123.78	141.23
3/22/2012	12:53:30	0.000	253.93	216.27
3/22/2012	12:54:30	0.000	280.87	266.93
3/22/2012	12:55:30	0.000	281.29	265.83

APPENDIX E – FCCU Scrubber CGA Results

CYLINDER GAS AUDIT (CGA)
ASSESSMENT DATA SHEET

Company:	Valero Refining-Texas, L.P.	**Analyzer Info**	
Location:	Houston, TX	**Manufacturer:**	Servomex
Source:	FCCU Scrubber	**Model No:**	1440
CEMS type:	O_2	**Range (%):**	0 - 25 %
Audit Date:	March 22, 2012	**Serial No.:**	3739
Project No.:	12VALH172	**Personnel.:**	KF/BJ

$$\text{Accuracy} = \left(\frac{\overline{C_m} - C_a}{C_a} \right) \times 100$$

Mid Level Calibration Gas	
40 CFR 60 App. F Sources	40 CFR 266 Appendix IX Sources
Pollutant analyzers - 20 - 30 % of span	CO analyzers (200 ppm span) - 60 - 80 ppm
Oxygen analyzers - 4 - 6 % O_2	CO analyzers (3,000 ppm span) - 900 - 1200 ppm
Carbon dioxide analyzers - 5 -8 % CO_2	Oxygen analyzers - 8 - 10 % O_2

	Response			
Trial No. 1:	5.02	Gas type:	Protocol	
Trial No. 2:	5.02	Concentration (C_a):	4.96	%
Trial No. 3:	5.02	Tank serial #:	EB0001188	
Average (C_m) :	5.02	Expiration Date:	December 7, 2013	
Accuracy %:	1.21			

High Level Calibration Gas	
40 CFR 60 App. F Sources	40 CFR 266 Appendix IX Sources
Pollutant analyzers - 50 - 60 % of span	CO analyzers (200 ppm span) - 140 - 160 ppm
Oxygen analyzers - 8 - 12 % O_2	CO analyzers (3,000 ppm span) - 2100 - 2400 ppm
Carbon dioxide analyzers - 10 -14 % CO_2	Oxygen analyzers - 14 - 16 % O_2

	Response			
Trial No. 1:	10.05	Gas type:	Protocol	
Trial No. 2:	10.05	Concentration (C_a):	9.99	%
Trial No. 3:	10.05	Tank serial #:	EB0005877	
Average (C_m) :	10.05	Expiration Date:	December 7, 2013	
Accuracy %:	0.60			

40 CFR 266 Allowable Limit - 0.5 % O_2 or 5% of span for CO
40 CFR 60 Allowable limit - 15 % average response value, ± 5 ppm, or ≤ 0.7% O_2 or CO_2

CYLINDER GAS AUDIT (CGA)
ASSESSMENT DATA SHEET

Company:	Valero Refining-Texas, L.P.	**Analyzer Info**	
Location:	Houston, TX	**Manufacturer:**	CAI
Source:	FCCU Scrubber	**Model No:**	602
CEMS type:	SO_2	**Range (ppm):**	0 - 250 ppm
Audit Date:	March 22, 2012	**Serial No.:**	U06002-M
Project No.:	12VALH172	**Personnel.:**	KF/BJ

$$\text{Accuracy} = \left(\frac{C_m - C_a}{C_a}\right) \times 100$$

Mid Level Calibration Gas	
40 CFR 60 App. F Sources	40 CFR 266 Appendix IX Sources
Pollutant analyzers - 20 - 30 % of span	CO analyzers (200 ppm span) - 60 - 80 ppm
Oxygen analyzers - 4 - 6 % O_2	CO analyzers (3,000 ppm span) - 900 - 1200 ppm
Carbon dioxide analyzers - 5 -8 % CO_2	Oxygen analyzers - 8 - 10 % O_2

	Response			
Trial No. 1:	67.48	Gas type:	Protocol	
Trial No. 2:	69.06	Concentration (C_a):	72.00	ppm
Trial No. 3:	70.40	Tank serial #:	EB0030226	
Average (C_m) :	68.98	Expiration Date:	January 4, 2014	
Accuracy %:	-4.19			

High Level Calibration Gas	
40 CFR 60 App. F Sources	40 CFR 266 Appendix IX Sources
Pollutant analyzers - 50 - 60 % of span	CO analyzers (200 ppm span) - 140 - 160 ppm
Oxygen analyzers - 8 - 12 % O_2	CO analyzers (3,000 ppm span) - 2100 - 2400 ppm
Carbon dioxide analyzers - 10 -14 % CO_2	Oxygen analyzers - 14 - 16 % O_2

	Response			
Trial No. 1:	141.89	Gas type:	Protocol	
Trial No. 2:	142.81	Concentration (C_a):	141.60	ppm
Trial No. 3:	143.63	Tank serial #:	EB0032690	
Average (C_m) :	142.78	Expiration Date:	January 14, 2014	
Accuracy %:	0.83			

40 CFR 266 Allowable Limit - 0.5 % O_2 or 5% of span for CO
40 CFR 60 Allowable limit - 15 % average response value, ± 5 ppm, or ≤ 0.7% O_2 or CO_2

CYLINDER GAS AUDIT (CGA)
ASSESSMENT DATA SHEET

Company:	Valero Refining-Texas, L.P.	**Analyzer Info**	
Location:	Houston, TX	**Manufacturer:**	Thermo Scientific
Source:	FCCU Scrubber	**Model No:**	42C
CEMS type:	NO_x	**Range (ppm):**	0 - 500 ppm
Audit Date:	March 22, 2012	**Serial No.:**	0505310681
Project No.:	12VALH172	**Personnel.:**	KF/BJ

$$\text{Accuracy} = \left(\frac{\overline{C_m} - C_a}{C_a} \right) \times 100$$

Mid Level Calibration Gas	
40 CFR 60 App. F Sources	40 CFR 266 Appendix IX Sources
Pollutant analyzers - 20 - 30 % of span	CO analyzers (200 ppm span) - 60 - 80 ppm
Oxygen analyzers - 4 - 6 % O_2	CO analyzers (3,000 ppm span) - 900 - 1200 ppm
Carbon dioxide analyzers - 5 -8 % CO_2	Oxygen analyzers - 8 - 10 % O_2

	Response			
Trial No. 1:	124.54	Gas type:	Protocol	
Trial No. 2:	125.45	Concentration (C_a):	126.30	ppm
Trial No. 3:	126.04	Tank serial #:	CC117780	
Average (C_m) :	125.34	Expiration Date:	December 16, 2013	
Accuracy %:	-0.76			

High Level Calibration Gas	
40 CFR 60 App. F Sources	40 CFR 266 Appendix IX Sources
Pollutant analyzers - 50 - 60 % of span	CO analyzers (200 ppm span) - 140 - 160 ppm
Oxygen analyzers - 8 - 12 % O_2	CO analyzers (3,000 ppm span) - 2100 - 2400 ppm
Carbon dioxide analyzers - 10 -14 % CO_2	Oxygen analyzers - 14 - 16 % O_2

	Response			
Trial No. 1:	284.36	Gas type:	Protocol	
Trial No. 2:	285.10	Concentration (C_a):	287.70	ppm
Trial No. 3:	284.14	Tank serial #:	CC145066	
Average (C_m) :	284.53	Expiration Date:	December 16, 2013	
Accuracy %:	-1.10			

40 CFR 266 Allowable Limit - 0.5 % O_2 or 5% of span for CO
40 CFR 60 Allowable limit - 15 % average response value, ± 5 ppm, or ≤ 0.7% O_2 or CO_2

CYLINDER GAS AUDIT (CGA)
ASSESSMENT DATA SHEET

Company:	Valero Refining-Texas, L.P.	**Analyzer Info**	
Location:	Houston, TX	**Manufacturer:**	Thermo Scientific
Source:	FCCU Scrubber	**Model No:**	48C
CEMS type:	CO	**Range (ppm):**	0 - 1000 ppm
Audit Date:	March 22, 2012	**Serial No.:**	0505310683
Project No.:	12VALH172	**Personnel.:**	KF/BJ

$$\text{Accuracy} = \left(\frac{\overline{C_m} - C_a}{C_a}\right) \times 100$$

Mid Level Calibration Gas	
40 CFR 60 App. F Sources	40 CFR 266 Appendix IX Sources
Pollutant analyzers - 20 - 30 % of span	CO analyzers (200 ppm span) - 60 - 80 ppm
Oxygen analyzers - 4 - 6 % O_2	CO analyzers (3,000 ppm span) - 900 - 1200 ppm
Carbon dioxide analyzers - 5 -8 % CO_2	Oxygen analyzers - 8 - 10 % O_2

	Response			
Trial No. 1:	260.53	Gas type:	Protocol	
Trial No. 2:	262.36	Concentration (C_a):	248.90	ppm
Trial No. 3:	262.51	Tank serial #:	CC117780	
Average (C_m) :	261.80	Expiration Date:	December 16, 2013	
Accuracy %:	5.18			

High Level Calibration Gas	
40 CFR 60 App. F Sources	40 CFR 266 Appendix IX Sources
Pollutant analyzers - 50 - 60 % of span	CO analyzers (200 ppm span) - 140 - 160 ppm
Oxygen analyzers - 8 - 12 % O_2	CO analyzers (3,000 ppm span) - 2100 - 2400 ppm
Carbon dioxide analyzers - 10 -14 % CO_2	Oxygen analyzers - 14 - 16 % O_2

	Response			
Trial No. 1:	600.73	Gas type:	Protocol	
Trial No. 2:	600.83	Concentration (C_a):	599.20	ppm
Trial No. 3:	600.68	Tank serial #:	CC145066	
Average (C_m) :	600.75	Expiration Date:	December 16, 2013	
Accuracy %:	0.26			

40 CFR 266 Allowable Limit - 0.5 % O_2 or 5% of span for CO

40 CFR 60 Allowable limit - 15 % average response value, ± 5 ppm, or ≤ 0.7% O_2 or CO_2

FORM# GSC-WP004-001
REV 2010-02, EFF 8/23/11

CYLINDER GAS AUDIT (CGA) ASSESSMENT DATA SHEET

Company:	Valero	**Analyzer Info**	
Location:	Houston, TX	Manufacturer:	Servomex
Source:	FCCU	Model No:	1440
CEMS type:	O_2	Range (ppm):	0-25%
Audit Date:	3/12/12	Serial No.:	3739
Project No.:	12VALH172	Personnel:	KJR/BJ

$$\text{Accuracy} = \left(\frac{\overline{C_m} - C_a}{C_a}\right) \times 100$$

Mid Level Calibration Gas	
40 CFR 60 App. F Sources	40 CFR 266 Appendix IX Sources
Pollutant analyzers - 20 - 30 % of span	CO analyzers (200 ppm span) - 60 - 80 ppm
Oxygen analyzers - 4 - 6 % O_2	CO analyzers (3,000 ppm span) - 900 - 1200 ppm
Carbon dioxide analyzers - 5 -8 % CO_2	Oxygen analyzers - 8 - 10 % O_2

	Response		
Trial No. 1:	5.02	Gas type:	Protocol
Trial No. 2:	5.02	Concentration (C_a):	4.96 %
Trial No. 3:	5.02	Tank serial #:	EB0001188 ~~ppm~~
Average (C_m) :	5.02	Expiration Date:	~~12/6/13~~ 12/7/13
Accuracy %:	1.21		

High Level Calibration Gas	
40 CFR 60 App. F Sources	40 CFR 266 Appendix IX Sources
Pollutant analyzers - 50 - 60 % of span	CO analyzers (200 ppm span) - 140 - 160 ppm
Oxygen analyzers - 8 - 12 % O_2	CO analyzers (3,000 ppm span) - 2100 - 2400 ppm
Carbon dioxide analyzers - 10 -14 % CO_2	Oxygen analyzers - 14 - 16 % O_2

	Response		
Trial No. 1:	10.05	Gas type:	Protocol
Trial No. 2:	10.05	Concentration (C_a):	9.99 ~~ppm~~ %
Trial No. 3:	10.05	Tank serial #:	EB0005877
Average (C_m) :	10.05	Expiration Date:	~~12/6/13~~ 12/7/13
Accuracy %:	0.60		

40 CFR 266 Allowable Limit - 0.5 % O_2 or 5% of span for CO
40 CFR 60 Allowable limit - 15 % average response value or +/- 5 ppm

FORM# GSC-WP004-001
REV 2010-02, EFF 8/23/11

CYLINDER GAS AUDIT (CGA)
ASSESSMENT DATA SHEET

Company: Valero
Location: Houston, TX
Source: FCCU
CEMS type: SO2
Audit Date: 3/22/12
Project No.: 12WAH0177

Analyzer Info
Manufacturer: CAI
Model No: 600
Range (ppm): 0-750
Serial No.: 600002-M
Personnel: KSL/BS

$$\text{Accuracy} = \left(\frac{\overline{C_m - C_a}}{C_a}\right) \times 100$$

Mid Level Calibration Gas	
40 CFR 60 App. F Sources	40 CFR 266 Appendix IX Sources
Pollutant analyzers - 20 - 30 % of span	CO analyzers (200 ppm span) - 60 - 80 ppm
Oxygen analyzers - 4 - 6 % O_2	CO analyzers (3,000 ppm span) - 900 - 1200 ppm
Carbon dioxide analyzers - 5 -8 % CO_2	Oxygen analyzers - 8 - 10 % O_2

	Response
Trial No. 1:	67.49
Trial No. 2:	69.06
Trial No. 3:	70.90
Average (C_m) :	68.98

Gas type: Protocol
Concentration (C_a): 72.0 ppm
Tank serial #: EB0030726
Expiration Date: 1/4/14

Accuracy %: -4.14

High Level Calibration Gas	
40 CFR 60 App. F Sources	40 CFR 266 Appendix IX Sources
Pollutant analyzers - 50 - 60 % of span	CO analyzers (200 ppm span) - 140 - 160 ppm
Oxygen analyzers - 8 - 12 % O_2	CO analyzers (3,000 ppm span) - 2100 - 2400 ppm
Carbon dioxide analyzers - 10 -14 % CO_2	Oxygen analyzers - 14 - 16 % O_2

	Response
Trial No. 1:	141.89
Trial No. 2:	142.89
Trial No. 3:	143.63
Average (C_m) :	142.79

Gas type: Protocol
Concentration (C_a): 141.6 ppm
Tank serial #: EB0032690
Expiration Date: 1/4/14

Accuracy %: 0.83

40 CFR 266 Allowable Limit - 0.5 % O_2 or 5% of span for CO
40 CFR 60 Allowable limit - 15 % average response value or +/- 5 ppm

FORM# GSC-WP004-001
REV 2010-02, EFF 8/23/11

CYLINDER GAS AUDIT (CGA)
ASSESSMENT DATA SHEET

Company: Valero
Location: HOUSTON, TX
Source: FCCU
CEMS type: NO_x
Audit Date: 3/22/12
Project No.: 12WALH172

Analyzer Info
Manufacturer: TECO (Thermo Scientific)
Model No: 42i
Range (ppm): 0-500
Serial No.: 0505310681
Personnel: KSR/BB

$$\text{Accuracy} = \left(\frac{C_m - C_a}{C_a}\right) \times 100$$

Mid Level Calibration Gas	
40 CFR 60 App. F Sources	40 CFR 266 Appendix IX Sources
Pollutant analyzers - 20 - 30 % of span	CO analyzers (200 ppm span) - 60 - 80 ppm
Oxygen analyzers - 4 - 6 % O_2	CO analyzers (3,000 ppm span) - 900 - 1200 ppm
Carbon dioxide analyzers - 5 -8 % CO_2	Oxygen analyzers - 8 - 10 % O_2

	Response
Trial No. 1:	124.54
Trial No. 2:	125.45
Trial No. 3:	126.04
Average (C_m) :	125.34

Gas type: Protocol
Concentration (C_a): ~~125.6~~ 126.3 ppm
Tank serial #: ~~CC340757~~ CC117180
Expiration Date: ~~12/18/13~~

KSR 3/30/12

Accuracy %: -0.76

High Level Calibration Gas	
40 CFR 60 App. F Sources	40 CFR 266 Appendix IX Sources
Pollutant analyzers - 50 - 60 % of span	CO analyzers (200 ppm span) - 140 - 160 ppm
Oxygen analyzers - 8 - 12 % O_2	CO analyzers (3,000 ppm span) - 2100 - 2400 ppm
Carbon dioxide analyzers - 10 -14 % CO_2	Oxygen analyzers - 14 - 16 % O_2

	Response
Trial No. 1:	284.36
Trial No. 2:	285.10
Trial No. 3:	284.14
Average (C_m) :	284.53

Gas type: Protocol
Concentration (C_a): ~~285.6~~ 287.7 ppm
Tank serial #: ~~CC124567~~ CC145066
Expiration Date: 12/18/13

KSR 3/30/12

Accuracy %: -1.10

40 CFR 266 Allowable Limit - 0.5 % O_2 or 5% of span for CO
40 CFR 60 Allowable limit - 15 % average response value or +/- 5 ppm

FORM# GSC-WP004-001
REV 2010-02, EFF 8/23/11

CYLINDER GAS AUDIT (CGA)
ASSESSMENT DATA SHEET

Company: Valero
Location: Houston, TX
Source: FCCU
CEMS type: CO
Audit Date: 3/22/12
Project No.: 12VAH117

Analyzer Info
Manufacturer: TECO (Thermo Scientific)
Model No: 48C
Range (ppm): ~~0-1000~~ 0-1000 ppm 4/2/12
Serial No.: 0505310683
Personnel: KSR/BT

$$\text{Accuracy} = \left(\frac{\overline{C_m} - C_a}{C_a}\right) \times 100$$

Mid Level Calibration Gas	
40 CFR 60 App. F Sources	40 CFR 266 Appendix IX Sources
Pollutant analyzers - 20 - 30 % of span	CO analyzers (200 ppm span) - 60 - 80 ppm
Oxygen analyzers - 4 - 6 % O_2	CO analyzers (3,000 ppm span) - 900 - 1200 ppm
Carbon dioxide analyzers - 5 -8 % CO_2	Oxygen analyzers - 8 - 10 % O_2

	Response
Trial No. 1:	260.53
Trial No. 2:	262.36
Trial No. 3:	262.51
Average (C_m) :	261.80

Gas type: Protocol
Concentration (C_a): 248.9
Tank serial #: CC117680 ppm
Expiration Date: 12/16/13

Accuracy %: 5.18

High Level Calibration Gas	
40 CFR 60 App. F Sources	40 CFR 266 Appendix IX Sources
Pollutant analyzers - 50 - 60 % of span	CO analyzers (200 ppm span) - 140 - 160 ppm
Oxygen analyzers - 8 - 12 % O_2	CO analyzers (3,000 ppm span) - 2100 - 2400 ppm
Carbon dioxide analyzers - 10 -14 % CO_2	Oxygen analyzers - 14 - 16 % O_2

	Response
Trial No. 1:	600.73
Trial No. 2:	600.83
Trial No. 3:	600.68
Average (C_m) :	600.75

Gas type: Protocol
Concentration (C_a): 599.2 ppm
Tank serial #: CC145016
Expiration Date: 12/16/13

Accuracy %: 0.26

40 CFR 266 Allowable Limit - 0.5 % O_2 or 5% of span for CO
40 CFR 60 Allowable limit - 15 % average response value or +/- 5 ppm

Valero Refining-Texas, L.P.
Houston Refinery
Houston, TX

FCCU Scrubber

REALTIME DATA SAMPLES AND AVERAGES REPORT
Cirrus - Process Analysts, Inc.

Title: FCCU cga 3/22/2012
Sample Interval: 10 seconds
Average Interval: 60 seconds

Date	Time	FCCU-SO2 ppm dry	FCCU-O2 % dry	FCCU-CO ppm dry	FCCU-NOx ppm dry
3/22/2012	6:54:50	1.31	1.687	53.37	11.40
3/22/2012	6:55:50	1.11	1.712	51.28	11.57
3/22/2012	6:56:50	1.11	1.680	51.28	11.80
3/22/2012	6:57:50	1.18	1.750	50.47	11.80
3/22/2012	6:58:50	1.17	1.662	51.89	11.32
3/22/2012	6:59:50	0.47	1.754	48.94	12.08
3/22/2012	7:00:50	0.95	1.580	50.11	11.83
3/22/2012	7:01:50	0.78	1.491	53.22	10.25
3/22/2012	7:02:50	0.38	1.754	49.15	12.67
3/22/2012	7:03:50	0.39	1.684	47.77	12.85
3/22/2012	7:04:50	0.98	1.884	49.76	14.04
3/22/2012	7:05:50	0.67	1.927	51.79	14.25
3/22/2012	7:06:50	1.46	2.031	49.30	16.71
3/22/2012	7:07:50	1.39	1.722	49.60	14.22
3/22/2012	7:08:50	1.04	1.412	52.50	9.97
3/22/2012	7:09:50	0.57	1.411	51.13	9.97
3/22/2012	7:10:50	10.01	3.922	49.76	9.41
3/22/2012	7:11:50	10.80	10.019	10.94	1.32
3/22/2012	7:12:50	0.84	10.047	0.36	-0.10
3/22/2012	7:13:50	0.06	10.055	0.36	-0.03
3/22/2012	7:14:50	0.28	10.059	0.46	-0.08
3/22/2012	7:15:50	0.06	9.021	2.09	0.10
3/22/2012	7:16:50	0.50	5.053	15.67	4.96
3/22/2012	7:17:50	0.25	5.021	0.36	-0.03
3/22/2012	7:18:50	0.55	5.016	0.36	-0.10
3/22/2012	7:19:50	0.22	5.011	0.31	-0.13
3/22/2012	7:20:50	0.18	8.340	0.31	-0.28
3/22/2012	7:21:50	0.47	10.049	0.31	-0.61
3/22/2012	7:22:50	0.61	10.058	0.31	-0.61
3/22/2012	7:23:50	0.15	8.631	0.31	-0.56
3/22/2012	7:24:50	0.13	5.047	0.31	-0.48
3/22/2012	7:25:50	0.09	5.023	0.46	-0.61
3/22/2012	7:26:50	0.19	5.019	0.51	-0.61
3/22/2012	7:27:50	0.10	9.727	0.31	-0.59
3/22/2012	7:28:50	0.17	10.040	0.31	-0.61
3/22/2012	7:29:50	0.09	10.048	0.31	-0.61
3/22/2012	7:30:50	0.27	10.050	0.31	-0.61
3/22/2012	7:31:50	0.41	5.566	0.31	-0.38
3/22/2012	7:32:50	0.19	5.024	0.31	-0.61
3/22/2012	7:33:50	0.09	5.014	0.31	-0.61
3/22/2012	7:34:50	0.32	4.943	0.51	-0.61
3/22/2012	7:35:50	0.47	2.055	33.83	16.48

Valero Refining-Texas, L.P.
Houston Refinery
Houston, TX

FCCU Scrubber

REALTIME DATA SAMPLES AND AVERAGES REPORT
Cirrus - Process Analysts, Inc.

Title: FCCU cga 3/22/2012
Sample Interval: 10 seconds
Average Interval: 60 seconds

Date	Time	FCCU-SO2 ppm dry	FCCU-O2 % dry	FCCU-CO ppm dry	FCCU-NOx ppm dry
3/22/2012	7:36:50	0.00	-0.003	225.89	117.75
3/22/2012	7:37:50	0.04	-0.023	260.33	123.93
3/22/2012	7:38:50	0.03	-0.032	260.53	124.54
3/22/2012	7:39:50	0.11	-0.036	260.99	124.77
3/22/2012	7:40:50	0.15	0.088	260.99	124.77
3/22/2012	7:41:50	0.24	-0.022	445.82	221.18
3/22/2012	7:42:50	0.36	-0.038	601.14	284.24
3/22/2012	7:43:50	0.03	-0.042	600.73	284.37
3/22/2012	7:44:50	0.52	-0.042	599.10	284.75
3/22/2012	7:45:50	0.01	-0.051	369.61	151.66
3/22/2012	7:46:50	0.10	-0.051	262.82	125.76
3/22/2012	7:47:50	0.03	-0.051	262.36	125.46
3/22/2012	7:48:50	0.53	-0.053	261.60	125.46
3/22/2012	7:49:50	0.00	-0.050	326.92	164.45
3/22/2012	7:50:50	0.00	-0.046	589.34	283.22
3/22/2012	7:51:50	0.38	-0.048	600.99	284.54
3/22/2012	7:52:50	0.42	-0.045	600.22	284.82
3/22/2012	7:53:50	0.18	-0.048	600.83	285.10
3/22/2012	7:54:50	0.00	-0.047	595.70	285.15
3/22/2012	7:55:50	0.05	-0.055	347.27	143.16
3/22/2012	7:56:50	0.19	-0.059	263.02	126.30
3/22/2012	7:57:50	0.00	-0.053	262.52	126.04
3/22/2012	7:58:50	0.11	-0.055	262.26	125.61
3/22/2012	7:59:50	0.00	-0.055	262.26	125.46
3/22/2012	8:00:50	0.00	-0.050	460.22	232.83
3/22/2012	8:01:50	0.00	-0.047	600.68	284.14
3/22/2012	8:02:50	0.00	-0.050	600.27	284.37
3/22/2012	8:03:50	0.18	-0.047	601.60	285.05
3/22/2012	8:04:50	24.57	-0.042	488.86	219.47
3/22/2012	8:05:50	63.86	-0.059	22.54	5.21
3/22/2012	8:06:50	67.23	-0.061	2.75	1.60
3/22/2012	8:07:50	66.80	-0.060	2.14	1.07
3/22/2012	8:08:50	67.14	-0.059	1.48	0.84
3/22/2012	8:09:50	67.49	-0.059	1.53	0.46
3/22/2012	8:10:50	102.50	-0.060	14.65	8.24
3/22/2012	8:11:50	140.67	-0.060	4.17	0.76
3/22/2012	8:12:50	141.89	-0.060	1.53	0.46
3/22/2012	8:13:50	142.69	-0.061	1.53	-0.08
3/22/2012	8:14:50	80.90	-0.061	1.48	0.08
3/22/2012	8:15:50	69.78	-0.059	1.48	-0.08
3/22/2012	8:16:50	69.06	-0.059	1.53	-0.08
3/22/2012	8:17:50	69.00	-0.061	1.53	-0.03

Valero Refining-Texas, L.P.
Houston Refinery
Houston, TX

FCCU Scrubber

REALTIME DATA SAMPLES AND AVERAGES REPORT
Cirrus - Process Analysts, Inc.

Title: FCCU cga 3/22/2012
Sample Interval: 10 seconds
Average Interval: 60 seconds

Date	Time	FCCU-SO2 ppm dry	FCCU-O2 % dry	FCCU-CO ppm dry	FCCU-NOx ppm dry
3/22/2012	8:18:50	86.70	-0.062	1.53	-0.10
3/22/2012	8:19:50	141.73	-0.059	1.53	-0.08
3/22/2012	8:20:50	142.81	-0.061	1.53	-0.08
3/22/2012	8:21:50	136.85	-0.061	1.53	-0.08
3/22/2012	8:22:50	73.45	-0.061	0.56	-0.08
3/22/2012	8:23:50	70.40	-0.061	0.31	-0.08
3/22/2012	8:24:50	70.81	-0.064	0.36	-0.10
3/22/2012	8:25:50	77.86	-0.065	0.31	-0.15
3/22/2012	8:26:50	139.75	-0.064	0.66	-0.10
3/22/2012	8:27:50	143.63	-0.060	1.12	-0.10
3/22/2012	8:28:50	144.22	-0.062	0.36	-0.03

APPENDIX F – Fuel Gas Drum CGA Results

CYLINDER GAS AUDIT (CGA)
ASSESSMENT DATA SHEET

Company:	Valero Refining-Texas, L.P.	**Analyzer Info**	
Location:	Houston, TX	**Manufacturer:**	Siemens
Source:	Fuel Gas Drum	**Model No:**	Maxum
CEMS type:	H_2S	**Range (ppm):**	0 - 300 ppm
Audit Date:	March 23, 2012	**Serial No.:**	5083970001
Project No.:	12VALH172	**Personnel.:**	DL/KF

$$\text{Accuracy} = \left(\frac{\overline{C_m} - C_a}{C_a} \right) \times 100$$

Mid Level Calibration Gas	
40 CFR 60 App. F Sources	40 CFR 266 Appendix IX Sources
Pollutant analyzers - 20 - 30 % of span	CO analyzers (200 ppm span) - 60 - 80 ppm
Oxygen analyzers - 4 - 6 % O_2	CO analyzers (3,000 ppm span) - 900 - 1200 ppm
Carbon dioxide analyzers - 5 -8 % CO_2	Oxygen analyzers - 8 - 10 % O_2

	Response			
Trial No. 1:	73.30	Gas type:	Protocol	
Trial No. 2:	74.00	Concentration (C_a):	67.28	ppm
Trial No. 3:	74.50	Tank serial #:	EB0032620	
Average (C_m) :	73.93	Expiration Date:	December 14, 2013	
Accuracy %:	9.89			

High Level Calibration Gas	
40 CFR 60 App. F Sources	40 CFR 266 Appendix IX Sources
Pollutant analyzers - 50 - 60 % of span	CO analyzers (200 ppm span) - 140 - 160 ppm
Oxygen analyzers - 8 - 12 % O_2	CO analyzers (3,000 ppm span) - 2100 - 2400 ppm
Carbon dioxide analyzers - 10 -14 % CO_2	Oxygen analyzers - 14 - 16 % O_2

	Response			
Trial No. 1:	179.90	Gas type:	Protocol	
Trial No. 2:	180.60	Concentration (C_a):	176.30	ppm
Trial No. 3:	180.80	Tank serial #:	EB0032631	
Average (C_m) :	180.43	Expiration Date:	December 14, 2013	
Accuracy %:	2.34			

40 CFR 266 Allowable Limit - 0.5 % O_2 or 5% of span for CO
40 CFR 60 Allowable limit - 15 % average response value, ± 5 ppm, or ≤ 0.7% O_2 or CO_2

FORM# GSC-WP004-001
REV 2010-02, EFF 8/23/11

CYLINDER GAS AUDIT (CGA) ASSESSMENT DATA SHEET

Company:	Valero	**Analyzer Info**	
Location:	Houston, TX	Manufacturer:	Siemens
Source:	Fuel Gas	Model No:	Maxum
CEMS type:	H_2S	Range (ppm):	0-300
Audit Date:	3/23/12	Serial No.:	5083970001
Project No.:	12VALH172	Personnel:	KJR/DL

$$\text{Accuracy} = \left(\frac{\overline{C_m} - C_a}{C_a}\right) \times 100$$

Mid Level Calibration Gas	
40 CFR 60 App. F Sources	40 CFR 266 Appendix IX Sources
Pollutant analyzers - 20 - 30 % of span	CO analyzers (200 ppm span) - 60 - 80 ppm
Oxygen analyzers - 4 - 6 % O_2	CO analyzers (3,000 ppm span) - 900 - 1200 ppm
Carbon dioxide analyzers - 5 -8 % CO_2	Oxygen analyzers - 8 - 10 % O_2

	Response		
Trial No. 1:	73.3	Gas type:	Protocol
Trial No. 2:	74.0	Concentration (C_a):	67.28
Trial No. 3:	74.5	Tank serial #:	EB0032620 ppm
Average (C_m) :	73.93	Expiration Date:	12/14/13
Accuracy %:	9.89		

High Level Calibration Gas	
40 CFR 60 App. F Sources	40 CFR 266 Appendix IX Sources
Pollutant analyzers - 50 - 60 % of span	CO analyzers (200 ppm span) - 140 - 160 ppm
Oxygen analyzers - 8 - 12 % O_2	CO analyzers (3,000 ppm span) - 2100 - 2400 ppm
Carbon dioxide analyzers - 10 -14 % CO_2	Oxygen analyzers - 14 - 16 % O_2

	Response		
Trial No. 1:	179.9	Gas type:	Protocol
Trial No. 2:	180.6	Concentration (C_a):	176.3 ppm
Trial No. 3:	180.8	Tank serial #:	EB0032631
Average (C_m) :	180.43	Expiration Date:	12/14/13
Accuracy %:	2.34		

40 CFR 266 Allowable Limit - 0.5 % O_2 or 5% of span for CO
40 CFR 60 Allowable limit - 15 % average response value or +/- 5 ppm

Valero Refining-Texas, L.P.
Houston Refinery
Houston, TX

Fuel Gas Drum

REALTIME DATA SAMPLES AND AVERAGES REPORT
Cirrus - Process Analysts, Inc.

Title:	Fuel Gas 3/23/2012	
Sample	Interval:	10 seconds
Average	Interval:	60 seconds

Date	Time	Fuel Gas-H2S ppm
3/23/2012	7:10:10	129.78
3/23/2012	7:11:10	120.35
3/23/2012	7:12:10	73.16
3/23/2012	7:13:10	73.17
3/23/2012	7:14:10	73.23
3/23/2012	7:15:10	73.25
3/23/2012	7:16:10	73.34
3/23/2012	7:17:10	73.34
3/23/2012	7:18:10	176.16
3/23/2012	7:19:10	176.15
3/23/2012	7:20:10	177.78
3/23/2012	7:21:10	177.80
3/23/2012	7:22:10	179.89
3/23/2012	7:23:10	179.90
3/23/2012	7:24:10	74.22
3/23/2012	7:25:10	74.21
3/23/2012	7:26:10	74.00
3/23/2012	7:27:10	74.00
3/23/2012	7:28:10	177.90
3/23/2012	7:29:10	177.92
3/23/2012	7:30:10	179.47
3/23/2012	7:31:10	179.77
3/23/2012	7:32:10	180.44
3/23/2012	7:33:10	180.57
3/23/2012	7:34:10	92.30
3/23/2012	7:35:10	74.64
3/23/2012	7:36:10	74.39
3/23/2012	7:37:10	74.35
3/23/2012	7:38:10	74.45
3/23/2012	7:39:10	74.49
3/23/2012	7:40:10	145.36
3/23/2012	7:41:10	180.77
3/23/2012	7:42:10	180.81
3/23/2012	7:43:10	180.83

GOLDEN SPECIALTY

Air Quality Test Report

APPENDIX G – Crude Atmospheric Heater North Stack CGA Results

CYLINDER GAS AUDIT (CGA)
ASSESSMENT DATA SHEET

Company:	Valero Refining-Texas, L.P.	**Analyzer Info**	
Location:	Houston, TX	**Manufacturer:**	Servomex
Source:	Crude Atmospheric Heater North Stack	**Model No:**	1440
CEMS type:	O_2	**Range (%):**	0 - 25 %
Audit Date:	March 23, 2012	**Serial No.:**	1056
Project No.:	12VALH172	**Personnel.:**	DL/KF

$$\text{Accuracy} = \left(\frac{\overline{C_m} - C_a}{C_a} \right) \times 100$$

Mid Level Calibration Gas	
40 CFR 60 App. F Sources	40 CFR 266 Appendix IX Sources
Pollutant analyzers - 20 - 30 % of span	CO analyzers (200 ppm span) - 60 - 80 ppm
Oxygen analyzers - 4 - 6 % O_2	CO analyzers (3,000 ppm span) - 900 - 1200 ppm
Carbon dioxide analyzers - 5 -8 % CO_2	Oxygen analyzers - 8 - 10 % O_2

	Response			
Trial No. 1:	5.00	Gas type:	Protocol	
Trial No. 2:	5.02	Concentration (C_a):	4.96	%
Trial No. 3:	5.02	Tank serial #:	EB0001188	
Average (C_m) :	5.01	Expiration Date:	December 7, 2013	
Accuracy %:	1.08			

High Level Calibration Gas	
40 CFR 60 App. F Sources	40 CFR 266 Appendix IX Sources
Pollutant analyzers - 50 - 60 % of span	CO analyzers (200 ppm span) - 140 - 160 ppm
Oxygen analyzers - 8 - 12 % O_2	CO analyzers (3,000 ppm span) - 2100 - 2400 ppm
Carbon dioxide analyzers - 10 -14 % CO_2	Oxygen analyzers - 14 - 16 % O_2

	Response			
Trial No. 1:	10.08	Gas type:	Protocol	
Trial No. 2:	10.10	Concentration (C_a):	9.99	%
Trial No. 3:	10.10	Tank serial #:	EB0005877	
Average (C_m) :	10.09	Expiration Date:	December 7, 2013	
Accuracy %:	1.03			

40 CFR 266 Allowable Limit - 0.5 % O_2 or 5% of span for CO
40 CFR 60 Allowable limit - 15 % average response value, ± 5 ppm, or ≤ 0.7% O_2 or CO_2

CYLINDER GAS AUDIT (CGA)
ASSESSMENT DATA SHEET

Company:	Valero Refining-Texas, L.P.	**Analyzer Info**	
Location:	Houston, TX	**Manufacturer:**	Thermo Scientific
Source:	Crude Atmospheric Heater North Stack	**Model No:**	42C
CEMS type:	NO_x	**Range (ppm):**	0 - 200 ppm
Audit Date:	March 23, 2012	**Serial No.:**	42CH2 - 63970 - 342
Project No.:	12VALH172	**Personnel.:**	DL/KF

$$\text{Accuracy} = \left(\frac{\overline{C_m} - C_a}{C_a} \right) \times 100$$

Mid Level Calibration Gas	
40 CFR 60 App. F Sources	40 CFR 266 Appendix IX Sources
Pollutant analyzers - 20 - 30 % of span	CO analyzers (200 ppm span) - 60 - 80 ppm
Oxygen analyzers - 4 - 6 % O_2	CO analyzers (3,000 ppm span) - 900 - 1200 ppm
Carbon dioxide analyzers - 5 -8 % CO_2	Oxygen analyzers - 8 - 10 % O_2

	Response			
Trial No. 1:	49.20	Gas type:	Protocol	
Trial No. 2:	49.01	Concentration (C_a):	50.10	ppm
Trial No. 3:	49.93	Tank serial #:	EB0006533	
Average (C_m) :	49.38	Expiration Date:	December 16, 2013	
Accuracy %:	-1.44			

High Level Calibration Gas	
40 CFR 60 App. F Sources	40 CFR 266 Appendix IX Sources
Pollutant analyzers - 50 - 60 % of span	CO analyzers (200 ppm span) - 140 - 160 ppm
Oxygen analyzers - 8 - 12 % O_2	CO analyzers (3,000 ppm span) - 2100 - 2400 ppm
Carbon dioxide analyzers - 10 -14 % CO_2	Oxygen analyzers - 14 - 16 % O_2

	Response			
Trial No. 1:	107.69	Gas type:	Protocol	
Trial No. 2:	108.03	Concentration (C_a):	109.30	ppm
Trial No. 3:	108.77	Tank serial #:	EB0003623	
Average (C_m) :	108.16	Expiration Date:	December 16, 2013	
Accuracy %:	-1.04			

40 CFR 266 Allowable Limit - 0.5 % O_2 or 5% of span for CO

40 CFR 60 Allowable limit - 15 % average response value, ± 5 ppm, or ≤ 0.7% O_2 or CO_2

CYLINDER GAS AUDIT (CGA)
ASSESSMENT DATA SHEET

Company:	Valero Refining-Texas, L.P.	**Analyzer Info**	
Location:	Houston, TX	**Manufacturer:**	Thermo Scientific
Source:	Crude Atmospheric Heater North Stack	**Model No:**	48C
CEMS type:	CO	**Range (ppm):**	0 - 500 ppm
Audit Date:	March 23, 2012	**Serial No.:**	48C - 64042 - 342
Project No.:	12VALH172	**Personnel.:**	DL/KF

$$\text{Accuracy} = \left(\frac{\overline{C_m} - C_a}{C_a} \right) \times 100$$

Mid Level Calibration Gas	
40 CFR 60 App. F Sources	40 CFR 266 Appendix IX Sources
Pollutant analyzers - 20 - 30 % of span	CO analyzers (200 ppm span) - 60 - 80 ppm
Oxygen analyzers - 4 - 6 % O_2	CO analyzers (3,000 ppm span) - 900 - 1200 ppm
Carbon dioxide analyzers - 5 -8 % CO_2	Oxygen analyzers - 8 - 10 % O_2

	Response			
Trial No. 1:	126.87	Gas type:	Protocol	
Trial No. 2:	127.12	Concentration (C_a):	127.20	ppm
Trial No. 3:	127.69	Tank serial #:	EB0006533	
Average (C_m) :	127.23	Expiration Date:	December 16, 2013	
Accuracy %:	0.02			

High Level Calibration Gas	
40 CFR 60 App. F Sources	40 CFR 266 Appendix IX Sources
Pollutant analyzers - 50 - 60 % of span	CO analyzers (200 ppm span) - 140 - 160 ppm
Oxygen analyzers - 8 - 12 % O_2	CO analyzers (3,000 ppm span) - 2100 - 2400 ppm
Carbon dioxide analyzers - 10 -14 % CO_2	Oxygen analyzers - 14 - 16 % O_2

	Response			
Trial No. 1:	283.07	Gas type:	Protocol	
Trial No. 2:	282.50	Concentration (C_a):	277.70	ppm
Trial No. 3:	282.41	Tank serial #:	EB0003623	
Average (C_m) :	282.66	Expiration Date:	December 16, 2013	
Accuracy %:	1.79			

40 CFR 266 Allowable Limit - 0.5 % O_2 or 5% of span for CO

40 CFR 60 Allowable limit - 15 % average response value, ± 5 ppm, or ≤ 0.7% O_2 or CO_2

FORM# GSC-WP004-001
REV 2010-02, EFF 8/23/11

CYLINDER GAS AUDIT (CGA)
ASSESSMENT DATA SHEET

Company: Valero
Location: Houston, TX
Source: Atmospheric Heater North
CEMS type: O2
Audit Date: 3/23/12
Project No.: 12JAH172

Analyzer Info
Manufacturer: Servomex
Model No: 1440
Range (ppm): 0-25%
Serial No.: 1056
Personnel: KSR/DL

$$\text{Accuracy} = \left(\frac{\overline{C_m} - C_a}{C_a}\right) \times 100$$

Mid Level Calibration Gas	
40 CFR 60 App. F Sources	40 CFR 266 Appendix IX Sources
Pollutant analyzers - 20 - 30 % of span	CO analyzers (200 ppm span) - 60 - 80 ppm
Oxygen analyzers - 4 - 6 % O_2	CO analyzers (3,000 ppm span) - 900 - 1200 ppm
Carbon dioxide analyzers - 5 -8 % CO_2	Oxygen analyzers - 8 - 10 % O_2

	Response
Trial No. 1:	5.00
Trial No. 2:	5.02
Trial No. 3:	5.02
Average (C_m) :	5.013
Accuracy %:	1.06

Gas type: Protocol
Concentration (C_a): 4.98 ~~ppm~~ %
Tank serial #: EB0001182
Expiration Date: ~~12/6/12~~ 12/7/13 DL 4/5/12

High Level Calibration Gas	
40 CFR 60 App. F Sources	40 CFR 266 Appendix IX Sources
Pollutant analyzers - 50 - 60 % of span	CO analyzers (200 ppm span) - 140 - 160 ppm
Oxygen analyzers - 8 - 12 % O_2	CO analyzers (3,000 ppm span) - 2100 - 2400 ppm
Carbon dioxide analyzers - 10 -14 % CO_2	Oxygen analyzers - 14 - 16 % O_2

	Response
Trial No. 1:	10.08
Trial No. 2:	10.10
Trial No. 3:	10.10
Average (C_m) :	10.09
Accuracy %:	1.03

Gas type: Protocol
Concentration (C_a): 9.99 ~~ppm~~ %
Tank serial #: EB0005877
Expiration Date: ~~12/6/12~~ 12/7/13 DL 4/5/12

40 CFR 266 Allowable Limit - 0.5 % O_2 or 5% of span for CO
40 CFR 60 Allowable limit - 15 % average response value or +/- 5 ppm

FORM# GSC-WP004-001
REV 2010-02, EFF 8/23/11

CYLINDER GAS AUDIT (CGA) ASSESSMENT DATA SHEET

Company: Valero
Location: Houston, TX
Source: Atmospheric Heater North
CEMS type: NOx
Audit Date: 3/23/12
Project No.: 12VALH172

Analyzer Info
Manufacturer: TECO (Thermo Scientific)
Model No: 42C
Range (ppm): ~~0-500~~ 0-200 ppm/ppm
Serial No.: ~~48C-64042-342~~ 42CH2-63970342
Personnel: KJR/DL

$$\text{Accuracy} = \left(\frac{\overline{C_m} - C_a}{C_a}\right) \times 100$$

Mid Level Calibration Gas	
40 CFR 60 App. F Sources	40 CFR 266 Appendix IX Sources
Pollutant analyzers - 20 - 30 % of span	CO analyzers (200 ppm span) - 60 - 80 ppm
Oxygen analyzers - 4 - 6 % O_2	CO analyzers (3,000 ppm span) - 900 - 1200 ppm
Carbon dioxide analyzers - 5 -8 % CO_2	Oxygen analyzers - 8 - 10 % O_2

	Response
Trial No. 1:	49.20
Trial No. 2:	49.01
Trial No. 3:	49.93
Average (C_m) :	49.38

Gas type: Protocol
Concentration (C_a): 50.10
Tank serial #: EB0006533 ppm
Expiration Date: 12/16/13

Accuracy %:

High Level Calibration Gas	
40 CFR 60 App. F Sources	40 CFR 266 Appendix IX Sources
Pollutant analyzers - 50 - 60 % of span	CO analyzers (200 ppm span) - 140 - 160 ppm
Oxygen analyzers - 8 - 12 % O_2	CO analyzers (3,000 ppm span) - 2100 - 2400 ppm
Carbon dioxide analyzers - 10 -14 % CO_2	Oxygen analyzers - 14 - 16 % O_2

	Response
Trial No. 1:	107.69
Trial No. 2:	108.03
Trial No. 3:	108.77
Average (C_m) :	108.16

Gas type: Protocol
Concentration (C_a): 109.3 ppm
Tank serial #: EB0003623
Expiration Date: 12/16/13

Accuracy %:

40 CFR 266 Allowable Limit - 0.5 % O_2 or 5% of span for CO
40 CFR 60 Allowable limit - 15 % average response value or +/- 5 ppm

FORM# GSC-WP004-001
REV 2010-02, EFF 8/23/11

CYLINDER GAS AUDIT (CGA)
ASSESSMENT DATA SHEET

Company: Valero
Location: Houston TX
Source: Atmospheric Heater North
CEMS type: CO
Audit Date: 3/23/12
Project No.: 12VAL4172

Analyzer Info
Manufacturer: Thermo
Model No: 43i
Range (ppm): 0-500
Serial No.: ~~42CH1-63770-342~~ 0-500 48C-64042-342
Personnel: KSR/DL

$$\text{Accuracy} = \left(\frac{\overline{C_m - C_a}}{C_a}\right) \times 100$$

Mid Level Calibration Gas	
40 CFR 60 App. F Sources	40 CFR 266 Appendix IX Sources
Pollutant analyzers - 20 - 30 % of span	CO analyzers (200 ppm span) - 60 - 80 ppm
Oxygen analyzers - 4 - 6 % O_2	CO analyzers (3,000 ppm span) - 900 - 1200 ppm
Carbon dioxide analyzers - 5 -8 % CO_2	Oxygen analyzers - 8 - 10 % O_2

	Response
Trial No. 1:	126.87
Trial No. 2:	127.12
Trial No. 3:	127.69
Average (C_m) :	127.23

Gas type: Protocol
Concentration (C_a): 127.2 ppm
Tank serial #: EB0006533
Expiration Date: 12/16/13

Accuracy %: 0.02

High Level Calibration Gas	
40 CFR 60 App. F Sources	40 CFR 266 Appendix IX Sources
Pollutant analyzers - 50 - 60 % of span	CO analyzers (200 ppm span) - 140 - 160 ppm
Oxygen analyzers - 8 - 12 % O_2	CO analyzers (3,000 ppm span) - 2100 - 2400 ppm
Carbon dioxide analyzers - 10 -14 % CO_2	Oxygen analyzers - 14 - 16 % O_2

	Response
Trial No. 1:	283.07
Trial No. 2:	282.50
Trial No. 3:	282.41
Average (C_m) :	282.66

Gas type: Protocol
Concentration (C_a): 277.7 ppm
Tank serial #: EB0003623
Expiration Date: 12/16/13

Accuracy %: 1.79

40 CFR 266 Allowable Limit - 0.5 % O_2 or 5% of span for CO
40 CFR 60 Allowable limit - 15 % average response value or +/- 5 ppm

Valero Refining-Texas, L.P.
Houston Refinery
Houston, TX

Crude Atmospheric Heater North Stack

REALTIME DATA SAMPLES AND AVERAGES REPORT

Cirrus - Process Analysts, Inc.

Title: ATM#1 CGA 3/23/2012
Sample Interval: 10 seconds
Average Interval: 60 seconds

Date	Time	AH1-O2 % dry	AH1-CO ppm dry	AH1-NOx ppm dry
3/23/2012	8:13:50	2.559	19.78	22.47
3/23/2012	8:14:50	4.946	10.17	4.44
3/23/2012	8:15:50	4.991	3.15	0.00
3/23/2012	8:16:50	5.001	3.15	0.00
3/23/2012	8:17:50	7.238	3.15	0.00
3/23/2012	8:18:50	10.055	3.15	0.00
3/23/2012	8:19:50	10.086	3.15	0.00
3/23/2012	8:20:50	7.416	3.15	0.00
3/23/2012	8:21:50	5.058	3.15	0.00
3/23/2012	8:22:50	5.036	3.15	0.00
3/23/2012	8:23:50	8.321	3.15	0.00
3/23/2012	8:24:50	10.082	3.15	0.00
3/23/2012	8:25:50	10.100	3.15	0.00
3/23/2012	8:26:50	6.805	3.15	0.00
3/23/2012	8:27:50	5.057	3.15	0.00
3/23/2012	8:28:50	5.038	3.15	0.00
3/23/2012	8:29:50	5.028	3.14	0.00
3/23/2012	8:30:50	5.026	3.15	0.00
3/23/2012	8:31:50	8.163	3.06	0.00
3/23/2012	8:32:50	10.077	3.14	0.00
3/23/2012	8:33:50	10.099	3.14	0.00
3/23/2012	8:34:50	9.182	3.24	0.00
3/23/2012	8:35:50	2.305	28.52	15.21
3/23/2012	8:36:50	2.232	30.35	21.94
3/23/2012	8:37:50	2.270	28.03	22.04
3/23/2012	8:38:50	2.289	20.12	22.56
3/23/2012	8:39:50	2.631	39.17	20.03
3/23/2012	8:40:50	0.002	121.17	47.54
3/23/2012	8:41:50	0.000	126.13	48.28
3/23/2012	8:42:50	0.000	126.38	48.40
3/23/2012	8:43:50	0.000	126.29	48.60
3/23/2012	8:44:50	0.001	153.23	53.00
3/23/2012	8:45:50	0.000	271.64	103.93
3/23/2012	8:46:50	0.000	280.98	108.96
3/23/2012	8:47:50	0.000	240.52	102.67
3/23/2012	8:48:50	0.000	133.11	50.51
3/23/2012	8:49:50	0.000	127.03	49.67
3/23/2012	8:50:50	0.000	127.36	49.44
3/23/2012	8:51:50	0.000	172.38	65.79
3/23/2012	8:52:50	0.000	277.90	108.77
3/23/2012	8:53:50	0.000	281.83	109.61
3/23/2012	8:54:50	0.000	281.25	109.97

Valero Refining-Texas, L.P.
Houston Refinery
Houston, TX

Crude Atmospheric Heater North Stack

REALTIME DATA SAMPLES AND AVERAGES REPORT

Cirrus - Process Analysts, Inc.

Title: ATM#1 CGA 3/23/2012
Sample Interval: 10 seconds
Average Interval: 60 seconds

Date	Time	AH1-O2 % dry	AH1-CO ppm dry	AH1-NOx ppm dry
3/23/2012	8:55:50	0.000	241.32	103.82
3/23/2012	8:56:50	0.000	132.77	50.94
3/23/2012	8:57:50	0.000	127.44	50.01
3/23/2012	8:58:50	0.000	127.21	49.73
3/23/2012	8:59:50	0.000	153.55	54.67
3/23/2012	9:00:50	0.000	272.56	108.46
3/23/2012	9:01:50	0.000	280.48	109.94
3/23/2012	9:02:50	0.000	281.16	110.38

GOLDEN SPECIALTY

Air Quality Test Report

APPENDIX H – Crude Atmospheric Heater South Stack CGA Results

CYLINDER GAS AUDIT (CGA)
ASSESSMENT DATA SHEET

Company:	Valero Refining-Texas, L.P.	**Analyzer Info**	
Location:	Houston, TX	**Manufacturer:**	Servomex
Source:	Crude Atmospheric Heater South Stack	**Model No:**	1440
CEMS type:	O_2	**Range (%):**	0 - 25 %
Audit Date:	March 23, 2012	**Serial No.:**	1056
Project No.:	12VALH172	**Personnel.:**	DL/KF

$$\text{Accuracy} = \left(\frac{\overline{C_m} - C_a}{C_a} \right) \times 100$$

Mid Level Calibration Gas	
40 CFR 60 App. F Sources	40 CFR 266 Appendix IX Sources
Pollutant analyzers - 20 - 30 % of span	CO analyzers (200 ppm span) - 60 - 80 ppm
Oxygen analyzers - 4 - 6 % O_2	CO analyzers (3,000 ppm span) - 900 - 1200 ppm
Carbon dioxide analyzers - 5 -8 % CO_2	Oxygen analyzers - 8 - 10 % O_2

	Response			
Trial No. 1:	4.99	Gas type:	Protocol	
Trial No. 2:	5.03	Concentration (C_a):	4.96	%
Trial No. 3:	5.03	Tank serial #:	EB0001188	
Average (C_m) :	5.02	Expiration Date:	December 7, 2013	
Accuracy %:	1.14			

High Level Calibration Gas	
40 CFR 60 App. F Sources	40 CFR 266 Appendix IX Sources
Pollutant analyzers - 50 - 60 % of span	CO analyzers (200 ppm span) - 140 - 160 ppm
Oxygen analyzers - 8 - 12 % O_2	CO analyzers (3,000 ppm span) - 2100 - 2400 ppm
Carbon dioxide analyzers - 10 -14 % CO_2	Oxygen analyzers - 14 - 16 % O_2

	Response			
Trial No. 1:	10.09	Gas type:	Protocol	
Trial No. 2:	10.10	Concentration (C_a):	9.99	%
Trial No. 3:	10.10	Tank serial #:	EB0005877	
Average (C_m) :	10.10	Expiration Date:	December 7, 2013	
Accuracy %:	1.07			

40 CFR 266 Allowable Limit - 0.5 % O_2 or 5% of span for CO
40 CFR 60 Allowable limit - 15 % average response value, ± 5 ppm, or ≤ 0.7% O_2 or CO_2

CYLINDER GAS AUDIT (CGA)
ASSESSMENT DATA SHEET

Company:	Valero Refining-Texas, L.P.	**Analyzer Info**	
Location:	Houston, TX	**Manufacturer:**	Thermo Scientific
Source:	Crude Atmospheric Heater South Stack	**Model No:**	42C
CEMS type:	NO_x	**Range (ppm):**	0 - 200 ppm
Audit Date:	March 23, 2012	**Serial No.:**	42CH2 - 63970 - 342
Project No.:	12VALH172	**Personnel.:**	DL/KF

$$\text{Accuracy} = \left(\frac{\overline{C_m} - C_a}{C_a} \right) \times 100$$

Mid Level Calibration Gas	
40 CFR 60 App. F Sources	40 CFR 266 Appendix IX Sources
Pollutant analyzers - 20 - 30 % of span	CO analyzers (200 ppm span) - 60 - 80 ppm
Oxygen analyzers - 4 - 6 % O_2	CO analyzers (3,000 ppm span) - 900 - 1200 ppm
Carbon dioxide analyzers - 5 -8 % CO_2	Oxygen analyzers - 8 - 10 % O_2

	Response			
Trial No. 1:	48.60	Gas type:	Protocol	
Trial No. 2:	49.66	Concentration (C_a):	50.10	ppm
Trial No. 3:	50.01	Tank serial #:	EB0006533	
Average (C_m) :	49.42	Expiration Date:	December 16, 2013	
Accuracy %:	-1.35			

High Level Calibration Gas	
40 CFR 60 App. F Sources	40 CFR 266 Appendix IX Sources
Pollutant analyzers - 50 - 60 % of span	CO analyzers (200 ppm span) - 140 - 160 ppm
Oxygen analyzers - 8 - 12 % O_2	CO analyzers (3,000 ppm span) - 2100 - 2400 ppm
Carbon dioxide analyzers - 10 -14 % CO_2	Oxygen analyzers - 14 - 16 % O_2

	Response			
Trial No. 1:	108.96	Gas type:	Protocol	
Trial No. 2:	109.97	Concentration (C_a):	109.30	ppm
Trial No. 3:	109.94	Tank serial #:	EB0003623	
Average (C_m) :	109.62	Expiration Date:	December 16, 2013	
Accuracy %:	0.30			

40 CFR 266 Allowable Limit - 0.5 % O_2 or 5% of span for CO
40 CFR 60 Allowable limit - 15 % average response value, ± 5 ppm, or ≤ 0.7% O_2 or CO_2

CYLINDER GAS AUDIT (CGA)
ASSESSMENT DATA SHEET

Company:	Valero Refining-Texas, L.P.	**Analyzer Info**	
Location:	Houston, TX	**Manufacturer:**	Thermo Scientific
Source:	Crude Atmospheric Heater South Stack	**Model No:**	48C
CEMS type:	CO	**Range (ppm):**	0 - 500 ppm
Audit Date:	March 23, 2012	**Serial No.:**	48C - 64042 - 342
Project No.:	12VALH172	**Personnel.:**	DL/KF

$$\text{Accuracy} = \left(\frac{C_m - C_a}{C_a} \right) \times 100$$

Mid Level Calibration Gas	
40 CFR 60 App. F Sources	40 CFR 266 Appendix IX Sources
Pollutant analyzers - 20 - 30 % of span	CO analyzers (200 ppm span) - 60 - 80 ppm
Oxygen analyzers - 4 - 6 % O_2	CO analyzers (3,000 ppm span) - 900 - 1200 ppm
Carbon dioxide analyzers - 5 -8 % CO_2	Oxygen analyzers - 8 - 10 % O_2

	Response			
Trial No. 1:	126.29	Gas type:	Protocol	
Trial No. 2:	127.03	Concentration (C_a):	127.20	ppm
Trial No. 3:	127.21	Tank serial #:	EB0006533	
Average (C_m) :	126.84	Expiration Date:	December 16, 2013	
Accuracy %:	-0.28			

High Level Calibration Gas	
40 CFR 60 App. F Sources	40 CFR 266 Appendix IX Sources
Pollutant analyzers - 50 - 60 % of span	CO analyzers (200 ppm span) - 140 - 160 ppm
Oxygen analyzers - 8 - 12 % O_2	CO analyzers (3,000 ppm span) - 2100 - 2400 ppm
Carbon dioxide analyzers - 10 -14 % CO_2	Oxygen analyzers - 14 - 16 % O_2

	Response			
Trial No. 1:	280.98	Gas type:	Protocol	
Trial No. 2:	281.83	Concentration (C_a):	277.70	ppm
Trial No. 3:	280.48	Tank serial #:	EB0003623	
Average (C_m) :	281.10	Expiration Date:	December 16, 2013	
Accuracy %:	1.22			

40 CFR 266 Allowable Limit - 0.5 % O_2 or 5% of span for CO

40 CFR 60 Allowable limit - 15 % average response value, ± 5 ppm, or ≤ 0.7% O_2 or CO_2

FORM# GSC-WP004-001
REV 2010-02, EFF 8/23/11

CYLINDER GAS AUDIT (CGA) ASSESSMENT DATA SHEET

Company: Valero
Location: Houston, TX
Source: Atmospheric Htr South
CEMS type: O_2
Audit Date: 3/23/12
Project No.: 12VALH172

Analyzer Info
Manufacturer: Servomex
Model No: 1440
Range (ppm): 0-25%
Serial No.: 1056
Personnel: KJR/OL

$$\text{Accuracy} = \left(\frac{\overline{C_m} - C_a}{C_a}\right) \times 100$$

Mid Level Calibration Gas	
40 CFR 60 App. F Sources	40 CFR 266 Appendix IX Sources
Pollutant analyzers - 20 - 30 % of span	CO analyzers (200 ppm span) - 60 - 80 ppm
Oxygen analyzers - 4 - 6 % O_2	CO analyzers (3,000 ppm span) - 900 - 1200 ppm
Carbon dioxide analyzers - 5 -8 % CO_2	Oxygen analyzers - 8 - 10 % O_2

	Response
Trial No. 1:	4.99
Trial No. 2:	5.03
Trial No. 3:	5.03
Average (C_m) :	5.02
Accuracy %:	1.4

Gas type: Protocol
Concentration (C_a): 4.96
Tank serial #: EB0001188 ppm
Expiration Date: 12/6/13 7 [illegible] 4/6/12

High Level Calibration Gas	
40 CFR 60 App. F Sources	40 CFR 266 Appendix IX Sources
Pollutant analyzers - 50 - 60 % of span	CO analyzers (200 ppm span) - 140 - 160 ppm
Oxygen analyzers - 8 - 12 % O_2	CO analyzers (3,000 ppm span) - 2100 - 2400 ppm
Carbon dioxide analyzers - 10 -14 % CO_2	Oxygen analyzers - 14 - 16 % O_2

	Response
Trial No. 1:	10.09
Trial No. 2:	10.10
Trial No. 3:	10.10
Average (C_m) :	10.10
Accuracy %:	1.07

Gas type: Protocol
Concentration (C_a): EB0005877 ~~ppm~~ KJR 3/30/12
Tank serial #: 9.99
Expiration Date: 12/6/13 7 [illegible] 4/6/12

40 CFR 266 Allowable Limit - 0.5 % O_2 or 5% of span for CO
40 CFR 60 Allowable limit - 15 % average response value or +/- 5 ppm

FORM# GSC-WP004-001
REV 2010-02, EFF 8/23/11

CYLINDER GAS AUDIT (CGA)
ASSESSMENT DATA SHEET

Company: Valero
Location: Houston, TX
Source: Atmospheric Heater South
CEMS type: NOx
Audit Date: 3/23/12
Project No.: 12WAH172

Analyzer Info
Manufacturer: TECO (Thermo Scientific)
Model No: 42i
Range (ppm): 0-200
Serial No.: 42iHL-63970-342
Personnel: KSR/DL

$$\text{Accuracy} = \left(\frac{C_m - C_a}{C_a}\right) \times 100$$

Mid Level Calibration Gas	
40 CFR 60 App. F Sources	40 CFR 266 Appendix IX Sources
Pollutant analyzers - 20 - 30 % of span	CO analyzers (200 ppm span) - 60 - 80 ppm
Oxygen analyzers - 4 - 6 % O_2	CO analyzers (3,000 ppm span) - 900 - 1200 ppm
Carbon dioxide analyzers - 5 -8 % CO_2	Oxygen analyzers - 8 - 10 % O_2

	Response
Trial No. 1:	48.60
Trial No. 2:	49.66
Trial No. 3:	50.08
Average (C_m) :	49.42

Gas type: Protocol
Concentration (C_a): 50.10 ppm
Tank serial #: EB0006533
Expiration Date: 12/6/13

Accuracy %: -1.35

High Level Calibration Gas	
40 CFR 60 App. F Sources	40 CFR 266 Appendix IX Sources
Pollutant analyzers - 50 - 60 % of span	CO analyzers (200 ppm span) - 140 - 160 ppm
Oxygen analyzers - 8 - 12 % O_2	CO analyzers (3,000 ppm span) - 2100 - 2400 ppm
Carbon dioxide analyzers - 10 -14 % CO_2	Oxygen analyzers - 14 - 16 % O_2

	Response
Trial No. 1:	109.96
Trial No. 2:	109.97
Trial No. 3:	109.94
Average (C_m) :	109.62

Gas type: Protocol
Concentration (C_a): 109.3 ppm
Tank serial #: EB0002627
Expiration Date: 12/4/13

Accuracy %: 0.30

40 CFR 266 Allowable Limit - 0.5 % O_2 or 5% of span for CO
40 CFR 60 Allowable limit - 15 % average response value or +/- 5 ppm

Valero Refining-Texas, L.P.
Houston Refinery
Houston, TX

Crude Atmospheric Heater South Stack

REALTIME DATA SAMPLES AND AVERAGES REPORT

Cirrus - Process Analysts, Inc.

Title:	ATM#2	CGA	3/23/2012
Sample	Interval:	10 seconds	
Average	Interval:	60 seconds	

Date	Time	AH2-O2 % dry	AH2-CO ppm dry	AH2-NOx ppm dry
12/3/2023	9:47:00	5.034	0.00	3.57
12/3/2023	9:48:00	5.022	0.00	3.67
12/3/2023	9:49:00	7.385	0.00	3.47
12/3/2023	9:50:00	10.085	0.00	3.57
12/3/2023	9:51:00	10.103	0.00	3.31

GOLDEN SPECIALTY

The *GOLD STANDARD* for Air Testing

Air Quality Test Report

CEMS Cylinder Gas Audit (CGA)
Second Quarter, 2012

Valero Refining-Texas, L.P.
Houston, Texas

Multiple Sources

Operating Permit No. 01381

Report Number: 12VALH173
Date Tested: May 29, 30 and 31, 2012
Date Prepared: June 22, 2012

PREPARED FOR
Valero Refining – Texas, L.P.
Houston Refinery
9701 Manchester Road
Houston, Texas 77012

Phone 713.924.1524

Prepared by:
GOLDEN SPECIALTY, INC.
888.472.9898
goldenspecialty.com

Air Quality Test Report

CEMS Cylinder Gas Audit (CGA)
Second Quarter, 2012

Valero Refining-Texas, L.P.
Houston, Texas

Multiple Sources

This report is supported by GOLDEN's Quality Assurance Manual and ASTM D7036 Interim Accreditation as an Air Emission Testing Body. The information included in the report is authentic and accurate to the best of our knowledge.

Certified by:

Scott B. Swiggard, Ph. D., QSTI 2006-025
Technical Director

Daniel A. Loubiere, QSTI 2008-128
Project Manager / Onsite QSTI

TABLE OF CONTENTS

EXECUTIVE SUMMARY 1
TABLE 1-1. SECOND QUARTER 2012 CGA RESULTS VS. ALLOWABLE 1
INTRODUCTION 2
PURPOSE OF TEST 2
PROBLEMS, DEVIATIONS AND/OR EXCEPTIONS 2
PERFORMANCE TEST PROCEDURES 3
CYLINDER GAS AUDIT (CGA) 3
SAMPLE CALCULATIONS 4
TABLE 1-2. CYLINDER GAS AUDIT DATA 4
CYLINDER GAS AUDIT CALCULATIONS 4
AVERAGE DIFFERENCE (D_{AVG}) 4
ACCURACY 4
AUDIT RESULTS 5
TABLE 1-1. SECOND QUARTER 2012 CGA RESULTS VS. ALLOWABLE 5
APPENDIX A – CALIBRATION DATA ..... A
APPENDIX B – BOILER NO. 1 CGA RESULTS ..... B
APPENDIX C – BOILER NO. 2 CGA RESULTS C
APPENDIX D – BOILER NO. 3 CGA RESULTS ..... D
APPENDIX E – FCCU SCRUBBER CGA RESULTS ..... E
APPENDIX F – FUEL GAS DRUM CGA RESULTS ..... F
APPENDIX G – CRUDE ATMOSPHERIC HEATER NORTH STACK CGA RESULTS ..... G
APPENDIX H – CRUDE ATMOSPHERIC HEATER SOUTH STACK CGA RESULTS ..... H
APPENDIX I – SRU B INCINERATOR CGA RESULTS I
APPENDIX J – SRU C INCINERATOR CGA RESULTS ..... J

GOLDEN SPECIALTY

Air Quality Test Report

EXECUTIVE SUMMARY

Golden Specialty, Inc. (GOLDEN) was contracted Valero Refining-Texas, L.P. (Valero) to perform air testing at their facility located in Houston, Texas. GOLDEN performed Cylinder Gas Audits (CGAs) on multiple continuous emissions monitoring systems (CEMS) installed at their facility. The audit was conducted in accordance with Operating Permit No. 01381.

The CGAs performed on May 29, 30 and 31, 2012, were performed by Mr. Dan Loubiere, with the assistance of Messrs. Patrick Perrone and Bryan Johnson. The results of the CGAs, presented in Table 1-1, demonstrate that the average response for the analyzer was within the 15% requirement 40 CFR Part 60, Appendix F, for each source.

Unit	Test Date	Cylinder Gas	Mid-Range Audit Gas	High-Range Audit Gas	*Allowable*
			Accuracy (%)	Accuracy (%)	
Boiler No. 1	5/30/2012	O_2	0.27	0.40	*15%*
		NO_x	-1.11	-2.33	*15%*
		CO	8.99	1.59	*15%*
Boiler No. 2	5/31/2012	O_2	1.21	-0.13	*15%*
		NO_x	-3.18	0.18	*15%*
		CO	-7.35	4.59	*15%*
Boiler No. 3	5/31/2012	O_2	-0.27	-0.33	*15%*
		NO_x	-2.69	-3.03	*15%*
		CO	11.35	-1.90	*15%*
FCCU Scrubber	5/30/2012	O_2	1.01	0.23	*15%*
		SO_2	-8.43	-1.27	*15%*
		NO_x	0.05	-1.16	*15%*
		CO	5.75	0.29	*15%*
Fuel Gas Drum	5/30/2012	H_2S	10.36	4.82	*15%*
Crude Atmospheric Heater North Stack	5/29/2012	O_2	-0.74	-0.37	*15%*
		NO_x	-4.66	-4.30	*15%*
		CO	-3.30	-4.03	*15%*
Crude Atmospheric Heater South Stack	5/29/2012	O_2	-1.21	-0.50	*15%*
		NO_x	-2.79	-1.49	*15%*
		CO	-1.55	-1.64	*15%*
SRU B Incinerator	5/31/2012	O_2	-2.02	-2.10	*15%*
		SO_2	0.59	0.58	*15%*
SRU C Incinerator	5/31/2012	O_2	2.76	0.30	*15%*
		SO_2	-1.20	1.05	*15%*

Table 1-1. Second Quarter 2012 CGA Results vs. Allowable

Based on the results shown in this report, the CEMS are operating within the limits of 40 CFR 60 Appendix F, Quality Assurance requirements for gas continuous emissions monitoring system used for compliance determination.

INTRODUCTION

Purpose of Test

The Audit was performed to demonstrate compliance with the requirements of 40 CFR Part 60, Appendix F, Quality Assurance requirements for gas continuous emissions monitoring systems used for compliance determination.

Problems, Deviations and/or Exceptions

No problems were encountered during this test program.

PERFORMANCE TEST PROCEDURES

Cylinder Gas Audit (CGA)

The CGA was performed in accordance with procedures outlined in 40 CFR 60 Appendix F. The audit consisted of alternately challenging the CEMS with mid and high level EPA Protocol Calibration gas standards. Triplicate runs were performed. The average response was compared to the respective calibration gas value and used to calculate the percent error for each audit point using the calculation presented below.

$$Percent\ Error = \left(\frac{Gas\ Value - Response}{Gas\ Value} \right) x100\%$$

SAMPLE CALCULATIONS

The following calculations were used in the determination of the accuracy for each CEMS audit point. The values listed below in Table 1-2 are the actual data obtained for the O_2 mid range calibration gas during the cylinder gas audit testing of the Boiler No. 1 CEMS and are presented to demonstrate the calculations for the CGA.

Run#	1 (ppm)	2 (ppm)	3 (ppm)
C_M	139.90	140.40	140.50
C_a	128.80	128.80	128.80
D_i	11.10	11.60	11.70

Table 1-2. Cylinder Gas Audit Data

Cylinder Gas Audit Calculations

Average Difference (d_{avg})

$$\bar{d} = \left[\frac{1}{n}\sum_{i=1}^{n} d_i\right]$$

Where:

d = Average difference between response and cylinder value data
n = Number of data points
d_i = Difference between response and cylinder value for any given point

$$\bar{d} = \frac{1}{3}[d_1 + d_2 + d_3]$$

$$\bar{d} = \mathbf{11.47}$$

Accuracy

$$A = \frac{C_m - C_a}{C_a} \times 100$$

Where:

C_m = Average CEMS response during audit
C_a = Certified gas value used for audit

$$\underline{\boldsymbol{A}} = \mathbf{8.90\ \%}$$

AUDIT RESULTS

The certifications of each gas used for the CGA program are presented in Appendix B. Assessment Data Printouts from the CGAs are presented in Appendices A through J. A printout of the CEMs performance, provided by Valero, is presented in each appendix.

Unit	Test Date	Cylinder Gas	Mid-Range Audit Gas	High-Range Audit Gas	*Allowable*
			Accuracy (%)	Accuracy (%)	
Boiler No. 1	5/30/2012	O_2	0.27	0.40	*15%*
		NO_x	-1.11	-2.33	*15%*
		CO	8.90	1.59	*15%*
Boiler No. 2	5/31/2012	O_2	1.21	-0.13	*15%*
		NO_x	-3.18	0.18	*15%*
		CO	-7.35	4.58	*15%*
Boiler No. 3	5/31/2012	O_2	-0.27	-0.33	*15%*
		NO_x	-2.69	-3.03	*15%*
		CO	11.35	-1.80	*15%*
FCCU Scrubber	5/30/2012	O_2	1.01	0.23	*15%*
		SO_2	-8.43	-1.27	*15%*
		NO_x	0.05	-1.16	*15%*
		CO	6.75	0.29	*15%*
Fuel Gas Drum	5/30/2012	H_2S	10.38	4.82	*15%*
Crude Atmospheric Heater North Stack	5/29/2012	O_2	-0.74	-0.37	*15%*
		NO_x	-4.66	-4.30	*15%*
		CO	-3.30	-4.03	*15%*
Crude Atmospheric Heater South Stack	5/29/2012	O_2	-1.21	-0.50	*15%*
		NO_x	-2.78	-1.49	*15%*
		CO	-1.55	-1.64	*15%*
SRU B Incinerator	5/31/2012	O_2	-2.02	-2.10	*15%*
		SO_2	0.59	0.58	*15%*
SRU C Incinerator	5/31/2012	O_2	2.76	0.30	*15%*
		SO_2	-1.20	1.05	*15%*

Table 1-1. Second Quarter 2012 CGA Results vs. Allowable

APPENDIX A – Calibration Data

COASTAL
Specialty Gas

55 N. 4th Street
Beaumont, TX 77701

Certificate of Analysis -- EPA Protocol Gas

Customer:				PO Number:	DAN
Golden Specialty Consulting				Reference#:	CGS-10-7427-8
931 Seaco				Date Filled:	12/1/2011
Deer Park	TX	77536-0000		Customer Part #:	

Serial Number	Size	Concentration Basis	Standard type	Certificate ID
EB0005877	ALS	Mole	EPA Protocol	01-12061103

Certified Concentration

Oxygen =	9.99%
Nitrogen =	Balance Gas

Analytical Information

Component	Analyzer Make/Model/SN			Analytical Principle	Last Calibration Date
Oxygen	Servomex	OA.244	244/158	Paramagnetic	11/14/2011

Assay Date 12/6/2011

Reference Standard(s)

Component	GMIS #	Cylinder #	Concentration	Uncertainty	Expiration Date
Oxygen	4838-3-1	CC121901	10.0%	+/- 0.1%	6/17/2012

This calibration standard has been certified per the 1997 EPA Traceability Protocol, Document EPA-600/97/121, using the procedure G1. All values certified to be +/- 1% NIST Traceable

Do Not Use This Standard Below 100 psig (0.7 Megapascals).

Valve Outlet Connection CGA	590
Max Pressure(psig)@70F	2000
Analysis Date	12/6/2011
Shelf Life	36 months
Expiration date:	12/7/2014

Certified By: Kelly Hays

Reviewed By:

Produced By:
Coastal Specialty Gas: (409) 838-3767 Fax (409) 835-1522
Coastal Specialty Gas PGVP Vendor ID: C12011

COASTAL
Specialty Gas

55 N. 4th Street
Beaumont, TX 77701

Certificate of Analysis -- EPA Protocol Gas

Customer:				**PO Number:**	DAN
Golden Specialty Consulting				**Reference#:**	CGS-10-7427-7
931 Seaco				**Date Filled:**	12/1/2011
Deer Park	TX	77536-0000		**Customer Part #:**	

Serial Number	Size	Concentration Basis	Standard type	Certificate ID
EB0001166	ALS	Mole	EPA Protocol	01-12061102

Certified Concentration

Oxygen =	4.66%
Nitrogen =	Balance Gas

Analytical Information

Component	Analyzer Make/Model/SN			Analytical Principle	Last Calibration Date
Oxygen	Servomex	OA.244	244/158	Paramagnetic	11/14/2011

Assay Date 12/6/2011

Reference Standard(s)

Component	GMIS #	Cylinder #	Concentration	Uncertainty	Expiration Date
Oxygen	4838-3-1	CC121901	10.0%	+/- 0.1%	6/17/2012

This calibration standard has been certified per the 1997 EPA Traceability Protocol, Document EPA-600/97/121, using the procedure G1. All values certified to be +/- 1% NIST Traceable.

Do Not Use This Standard Below 100 psig (0.7 Megapascals)

Valve Outlet Connection CGA:	590
Min Pressure(psig)/kPa:	2000
Analysis Date:	12/6/2011
Shelf Life:	36 months
Expiration date:	12/7/2014

Certified By: Kelly Blaze

Reviewed By:

Produced By:
Coastal Specialty Gas, (409) 838-3757 Fax (409) 835-1522
Coastal Specialty Gas PGVP Vendor ID: C12011

COASTAL
Specialty Gas

55 N. 4th Street
Beaumont, TX 77701

Certificate of Analysis – EPA Protocol Gas

Customer:				**PO Number:**	DAN
Golden Specialty Consulting				**Reference#:**	CGS-10-7427-6
931 Seaco				**Date Filled:**	12/1/2011
Deer Park	TX	77536-0000		**Customer Part #:**	

Cylinder Number	Size	Concentration Basis	Standard type	Certificate ID
CC145066	ALS	Mole	EPA Protocol	03-12151104

Certified Concentration

Carbon Monoxide =	**598.2 ppm**
Nitric Oxide =	**283.4 ppm**
NOx =	**287.7 ppm**
Nitrogen =	**Balance Gas**

Analytical Information

Component	Analyzer Make/Model/SN		Analytical Principle	Last Calibration Date
Carbon Monoxide	Thermo	Nicolet 6700 APW100179	FT-IR	11/16/2011
Nitric Oxide	Thermo	Nicolet 6700 APW100179	FT-IR	11/16/2011

First Assay Date 12/9/2011 Second Assay Date 12/15/2011

Reference Standard(s)

Component	GMIS #	Cylinder #	Concentration	Uncertainty	Expiration Date
Carbon Monoxide	3-10-1102	CC346730	250.5 ppm	+/- 1.2 ppm	3/11/2013
Nitric Oxide	10-28-1001	CC16382	226.2 ppm	+/- 1.2 ppm	10/29/2012
NOx	10-28-1001	CC16382	227.1 ppm		10/29/2012
Nitrogen			Balance Gas		

This calibration standard has been certified per the 1997 EPA Traceability Protocol, Document EPA-600/97/121, using the procedure G1

Do Not Use This Standard When Pressure Falls Below 100 psig (0.7 Megapascals)

Valve Outlet Connection CGA	660
Mix Pressure(psig)@70F	2000
Analysis Date	12/15/2011
Shelf Life	24 months
Expiration date	12/15/2013

Certified By: Kelly Blaze

Reviewed By:

Produced By:
Coastal Specialty Gas: (409) 838-3757 Fax (409) 835-1522
Coastal Specialty Gas PGVP Vendor ID: C12011

COASTAL
Specialty Gas

55 N. 4th Street
Beaumont, TX 77701

Certificate of Analysis – EPA Protocol Gas

Customer:			PO Number:	DAN
Golden Specialty Consulting			Reference#:	CGS-10-7427-2
931 Seaco			Date Filled:	12/1/2011
Deer Park	TX	77536-0000	Customer Part #:	

Cylinder Number	Size	Concentration Basis	Standard type	Certificate ID
CC329567	ALS	Mole	EPA Protocol	03-12141103

Certified Concentration

Carbon Monoxide =	279.2 ppm
Nitric Oxide =	284.6 ppm
NOx =	285.6 ppm
Nitrogen =	Balance Gas

Analytical Information

Component	Analyzer Make/Model/SN		Analytical Principle	Last Calibration Date
Carbon Monoxide	Thermo	Nicolet 6700 APW100179	FT-IR	11/16/2011
Nitric Oxide	Thermo	Nicolet 6700 APW100179	FT-IR	11/16/2011

First Assay Date 12/7/2011 Second Assay Date 12/14/2011

Reference Standard(s)

Component	GMIS #	Cylinder #	Concentration	Uncertainty	Expiration Date
Carbon Monoxide	3-10-1102	CC345730	250.5 ppm	+/- 1.2 ppm	3/11/2013
Nitric Oxide	10-28-1001	CC16362	220.2 ppm	+/- 1.2 ppm	10/29/2012
NOx	10-28-1001	CC16362	227.1 ppm		10/29/2012
Nitrogen			Balance Gas		

This calibration standard has been certified per the 1997 EPA Traceability Protocol, Document EPA-600/97/121, using the procedure G1

Do Not Use This Standard When Pressure Falls Below 100 psig (0.7 Megapascals)

Value Guard Conversion CGA:	350
Min Pressure(psig)@70F :	2000
Analysis Date:	12/14/2011
Shelf Life:	24 months
Expiration date	12/15/2013

Certified By Kelly Glaze Reviewed By [signature]

Produced By:
Coastal Specialty Gas: (409) 838-3757 Fax (409) 835-1522
Coastal Specialty Gas PGVP Vendor ID: G12011

6

COASTAL
Specialty Gas

55 N. 4th Street
Beaumont, TX 77701

Certificate of Analysis -- EPA Protocol Gas

Customer:				**PO Number:**	DAN
Golden Specialty Consulting				**Reference#:**	CGS-10-7427-5
931 Seaco				**Date Filled:**	12/2/2011
Deer Park	TX	77536-0000		**Customer Part #:**	

Cylinder Number	Size	Concentration Basis	Standard type	Certificate ID
CC117780	ALS	Mole	EPA Protocol	03-12151103

Certified Concentration

Carbon Monoxide =	248.9 ppm
Nitric Oxide =	124.3 ppm
NOx =	126.3 ppm
Nitrogen =	Balance Gas

Analytical Information

Component	Analyzer Make/Model/S#	Analytical Principle	Last Calibration Date
Carbon Monoxide	Thermo Nicolet 6700 APW100179	FT-IR	11/16/2011
Nitric Oxide	Thermo Nicolet 6700 APW100179	FT-IR	11/16/2011

First Assay Date 12/8/2011 Second Assay Date 12/15/2011

Reference Standard(s)

Component	GMIS #	Cylinder #	Concentration	Uncertainty	Expiration Date
Carbon Monoxide	3-10-1102	CC346730	250 5 ppm	+/- 1 2 ppm	3/11/2013
Nitric Oxide	10-28-1001	CC16352	226 2 ppm	+/- 1 2 ppm	10/28/2012
NOx	10-28-1001	CC16352	227.1 ppm		10/28/2012
Nitrogen			Balance Gas		

This calibration standard has been certified per the 1997 EPA Traceability Protocol, Document EPA-600/97/121, using the procedure G1

Do Not Use This Standard When Pressure Falls Below 100 psig (0.7 Megapascals)

Valve Outlet Connection CGA	660
Mix Pressure(psig)@70F	2000
Analysis Date	12/15/2011
Shelf Life	24 months
Expiration date	12/15/2013

Certified By Kelly Hays Reviewed By

Produced By:
Coastal Specialty Gas: (409) 838-3757 Fax (409) 835-1522
Coastal Specialty Gas PGVP Vendor ID: O12011

COASTAL
Specialty Gas

55 N. 4th Street
Beaumont, TX 77701

Certificate of Analysis – EPA Protocol Gas

Customer:				PO Number:	DAN
Golden Specialty Consulting				Reference#:	CGS-10-7427-1
931 Soaco				Date Filled:	12/1/2011
Deer Park	TX	77536-0000		Customer Part #:	

Cylinder Number	Size	Concentration Basis	Standard type	Certificate ID
CC346757	ALS	Mole	EPA Protocol	03-12141101

Certified Concentration

Carbon Monoxide =	128.6 ppm
Nitric Oxide =	124.7 ppm
NOx =	125.6 ppm
Nitrogen =	Balance Gas

Analytical Information

Component	Analyzer Make/Model/SN		Analytical Principle	Last Calibration Date
Carbon Monoxide	Thermo	Nicolet 6700 APW100179	FT-IR	11/16/2011
Nitric Oxide	Thermo	Nicolet 6700 APW100179	FT-IR	11/16/2011

First Assay Date: 12/7/2011 — Second Assay Date: 12/14/2011

Reference Standard(s)

Component	GMIS #	Cylinder #	Concentration	Uncertainty	Expiration Date
Carbon Monoxide	3-10-1102	CC346730	250.5 ppm	+/- 1.2 ppm	3/11/2013
Nitric Oxide	10-28-1001	CC10362	238.2 ppm	+/- 1.2 ppm	10/29/2012
NOx	10-28-1001	CC10362	227.1 ppm		10/29/2012
Nitrogen			Balance Gas		

This calibration standard has been certified per the 1997 EPA Traceability Protocol, Document EPA-600/R97/121, using the procedure G1.

Do Not Use This Standard When Pressure Falls Below 100 psig (0.7 Megapascals).

Valve Outlet Connection CGA:	590
Lab Pressure(psig)@70F:	2000
Analysis Date:	12/14/2011
Shelf Life	24 months
Expiration date:	12/13/2013

Certified By: Kelly Blaz — Reviewed By:

Produced By:
Coastal Specialty Gas: (409) 838-3757 Fax (409) 835-1522
Coastal Specialty Gas PGVP Vendor ID: G12011

COASTAL
Specialty Gas

55 N. 4th Street
Beaumont, TX 77701

Certificate of Analysis – EPA Protocol Gas

Customer:				**PO Number:**	DAN
Golden Specialty Consulting				**Reference#:**	CGS-10-7427-4
931 Seaco				**Date Filled:**	12/1/2011
Deer Park	TX	77536-0000		**Customer Part #:**	

Cylinder Number	Size	Concentration Basis	Standard type	Certificate ID
EB0003823	ALS	Mole	EPA Protocol	03-12151102

Certified Concentration

Carbon Monoxide =	277.7 ppm
Nitric Oxide =	100.7 ppm
NOx =	100.3 ppm
Nitrogen =	Balance Gas

Analytical Information

Component	Analyzer Make/Model/SN		Analytical Principle	Last Calibration Date
Carbon Monoxide	Thermo	Nicolet 6700 APW100179	FT-IR	11/16/2011
Nitric Oxide	Thermo	Nicolet 6700 APW100179	FT-IR	11/16/2011

First Assay Date 12/6/2011 Second Assay Date 12/15/2011

Reference Standard(s)

Component	GMIS #	Cylinder #	Concentration	Uncertainty	Expiration Date
Carbon Monoxide	3-10-1102	CC346730	250.6 ppm	+/- 1.2 ppm	2/11/2013
Nitric Oxide	10-28-1001	CC16362	226.2 ppm	+/- 1.2 ppm	10/29/2012
NOx	10-28-1001	CC16362	227.1 ppm		10/29/2012
Nitrogen			Balance Gas		

This calibration standard has been certified per the 1997 EPA Traceability Protocol, Document EPA-600/97/121, using the procedure G1.

Do Not Use This Standard When Pressure Falls Below 100 psig (0.7 Megapascals)

Valve Outlet Connection CGA	660
Min Pressure(psig)@70F	2000
Analysis Date	12/15/2011
Shelf Life	24 months
Expiration date	12/15/2013

Certified By Kelly Haze Reviewed By

Produced By:
Coastal Specialty Gas: (409) 838-3767 Fax (409) 835-1522
Coastal Specialty Gas PGVP Vendor ID: O12011

5

COASTAL
Specialty Gas

55 N. 4th Street
Beaumont, TX 77701

Certificate of Analysis – EPA Protocol Gas

Customer:				**PO# mber:**	DAN
Golden Specialty Consulting				**Reference#:**	CGS-10-7427-3
931 Seaco				**Date Filled:**	12/2/2011
Deer Park	TX	77536-0000		**Customer Part #:**	

Cylinder Number	Size	Concentration Basis	Standard type	Certificate ID
EB0006533	ALS	Mole	EPA Protocol	03-12151101

Certified Concentration

Carbon Monoxide =	127.2 ppm
Nitric Oxide =	49.32 ppm
NOx =	50.10 ppm
Nitrogen =	Balance Gas

Analytical Information

Component	Analyzer Make/Model/SN	Analytical Principle	Last Calibration Date
Carbon Monoxide	Thermo Nicolet 6700 APW100179	FT-IR	11/16/2011
Nitric Oxide	Thermo Nicolet 6700 APW100179	FT-IR	11/16/2011

First Assay Date 12/8/2011 Second Assay Date 12/15/2011

Reference Standard(s)

Component	GMIS #	Cylinder #	Concentration	Uncertainty	Expiration Date
Carbon Monoxide	3-10-1102	CC348730	250.5 ppm	+/- 1.2 ppm	3/11/2013
Nitric Oxide	10-28-1001	CC16362	226.2 ppm	+/- 1.2 ppm	10/29/2012
NOx	10-28-1001	CC16362	227.1 ppm		10/29/2012
Nitrogen			Balance Gas		

This calibration standard has been certified per the 1997 EPA Traceability Protocol, Document EPA-600/97/121, using the procedure G1.

Do Not Use This Standard When Pressure Falls Below 100 psig (0.7 Megapascals).

Valve Outlet Connection CGA:	660
Mix Pressure(psig)@70F :	2000
Analysis Date:	12/15/2011
Shelf Life :	24 months
Expiration date:	12/15/2013

Certified By: Kelly Blaze Reviewed By:

Produced By:
Coastal Specialty Gas: (409) 838-3757 Fax (409) 835-1522
Coastal Specialty Gas PGVP Vendor ID: O12011

COASTAL
Specialty Gas

55 N. 4th Street
Beaumont, TX 77701
(409) 838-3757

Certificate of Analysis

Size:	Serial Number:	Concentration Basis:	Standard type:	Reference #:	PO number:
ALS	EB0032615	Mole	EPA Protocol	010912-8	

Component	CAS Number	Requested Concentration	Certified Concentration	Accuracy	Method
SULFUR DIOXIDE	9-5-7446	275.0 ppm	288.1 ppm	+/- 1 %	Dispersive Infrared
NITROGEN	7727-37-9	Balance gas	Balance gas		

Valve Outlet Connection: CGA 660
Mix Pressure (psig) @ 70°F: 2000
Certification Date: 1/4/2012
Shelf Life: 24 months
Expiration date: 1/4/2014

REFERENCE STANDARD	Std Type	Cylinder #	Concentration
	SO2 GMIS	CC84414	899.38 ppm

INSTRUMENTATION	Instrument / Model	Serial #	Last Date Calibrated	Analytical Method
	Rosemount 880a	F-04300088	1/4/2012	Dispersive Infrared

Note: This standard was analyzed according to EPA Traceability Protocol for Assay and Certification of Gaseous Calibration Standards, Procedure G1 (September 1997).

*Do not use this standard when cylinder pressure is below 150 psig.

Issued By: Frank Haney

Reviewed By: Kelly Hays

Produced by: Global Calibration Gases LLC (PGVP ID: N12011)
1500 15th Avenue Drive East, #109
Palmetto, FL 34221

COASTAL
Specialty Gas

55 N. 4th Street
Beaumont, TX 77701
(409) 838-3757

Certificate of Analysis

Size:	Serial Number:	Concentration Basis:	Standard type:	Reference #:	PO number:
ALS	EB0032690	Mole	EPA Protocol	010912-6	

Component	CAS Number	Requested Concentration	Certified Concentration	Accuracy	Method
SULFUR DIOXIDE	9-5-7446	135.0 ppm	141.6 ppm	+/- 1 %	Dispersive Infrared
NITROGEN	7727-37-9	Balance gas	Balance gas		

Valve Outlet Connection: CGA 660
Mix Pressure (psig) @ 70°F: 2000
Certification Date: 1/4/2012
Shelf Life: 24 months
Expiration date: 1/4/2014

REFERENCE STANDARD	Std Type	Cylinder #	Concentration
	SO2 GMIS	CC84414	899.38 ppm

INSTRUMENTATION	Instrument / Model	Serial #	Last Date Calibrated	Analytical Method
	Rosemount 880a	F-04300088	1/4/2012	Dispersive Infrared

Note: This standard was analyzed according to EPA Traceability Protocol for Assay and Certification of Gaseous Calibration Standards, Procedure G1 (September 1997).

*Do not use this standard when cylinder pressure is below 150 psig.

Issued By: Frank Haney

Reviewed By: Kelly Hoge

Produced by: Global Calibration Gases LLC (PGVP ID: N12011)
1500 15th Avenue Drive East, #109
Palmetto, FL 34221

COASTAL
Specialty Gas

55 N. 4th Street
Beaumont, TX 77701
(409) 838-3757

Certificate of Analysis

Size:	Serial Number:	Concentration Basis:	Standard type:	Reference #:	PO number:
ALS	EB0032821	Mole	EPA Protocol	010912-5	

Component	CAS Number	Requested Concentration	Certified Concentration	Accuracy	Method
SULFUR DIOXIDE	9-5-7446	135.0 ppm	141.6 ppm	+/- 1 %	Dispersive Infrared
NITROGEN	7727-37-9	Balance gas	Balance gas		

Valve Outlet Connection: CGA 660
Mix Pressure (psig) @ 70°F: 2000
Certification Date: 1/4/2012
Shelf Life: 24 months
Expiration date: 1/4/2014

REFERENCE STANDARD	Std Type	Cylinder #	Concentration
	SO2 GMIS	CC84414	899.38 ppm

INSTRUMENTATION	Instrument / Model	Serial #	Last Date Calibrated	Analytical Method
	Rosemount 880a	F-04300088	1/4/2012	Dispersive Infrared

Note: This standard was analyzed according to EPA Traceability Protocol for Assay and Certification of Gaseous Calibration Standards, Procedure G1 (September 1997).

*Do not use this standard when cylinder pressure is below 150 psig.

Issued By: Frank Haney

Reviewed By: Kelly Hage

Produced by: Global Calibration Gases LLC (PGVP ID: N12011)
1500 16th Avenue Drive East, #109
Palmetto, FL 34221

COASTAL
Specialty Gas

55 N. 4th Street
Beaumont, TX 77701
(409) 838-3757

Certificate of Analysis

Size:	Serial Number:	Concentration Basis:	Standard type:	Reference #:	PO number:
ALS	EB0030226	Mole	EPA Protocol	010912-7	

Component	CAS Number	Requested Concentration	Certified Concentration	Accuracy	Method
SULFUR DIOXIDE	9-5-7446	65.0 ppm	72.0 ppm	+/- 1 %	Dispersive Infrared
NITROGEN	7727-37-9	Balance gas	Balance gas		

Valve Outlet Connection: CGA 660
Mix Pressure (psig) @ 70°F: 2000
Certification Date: 1/4/2012
Shelf Life: 24 months
Expiration date: 1/4/2014

REFERENCE STANDARD	Std Type	Cylinder #	Concentration
	SO2 GMIS	CC84414	899.38 ppm

INSTRUMENTATION	Instrument / Model	Serial #	Last Date Calibrated	Analytical Method
	Rosemount 880a	F-04300088	1/4/2012	Dispersive Infrared

Note: This standard was analyzed according to EPA Traceability Protocol for Assay and Certification of Gaseous Calibration Standards, Procedure G1 (September 1997).

*Do not use this standard when cylinder pressure is below 150 psig.

Issued By: Frank Haney

Reviewed By: Kelly Hays

Produced by: Global Calibration Gases LLC (PGVP ID: N12011)
1500 15th Avenue Drive East, #109
Palmetto, FL 34221

COASTAL
Specialty Gas

55 N. 4th Street
Beaumont, TX 77701
(409) 838-3757

Certificate of Analysis

Size:	Serial Number:	Concentration Basis:	Standard type:	Reference #:	PO number:
ALS	EB0032631	Mole	EPA Protocol	121411-5	

Component	CAS Number	Requested Concentration	Certified Concentration	Accuracy	Method
HYDROGEN SULFIDE	6-4-7783	165.0 ppm	176.3 ppm	+/- 1 %	TCD
NITROGEN	7727-37-9	Balance gas	Balance gas		

Valve Outlet Connection: CGA 330
Mix Pressure (psig) @ 70°F: 2000
Certification Date: 12/14/2011
Shelf Life: 24 months
Expiration date: 12/14/2013

REFERENCE STANDARD	Std Type	Cylinder #	Concentration
	GMIS	EB0032628	191.0 ppm

INSTRUMENTATION	Instrument / Model	Serial #	Last Date Calibrated	Analytical Method
	Agilent Quad Series	US02002031	12/14/2011	Thermal conductivity

Note: This standard was analyzed according to EPA Traceability Protocol for Assay and Certification of Gaseous Calibration Standards, Procedure G1 (September 1997).

*Do not use this standard when cylinder pressure is below 150 psig.

Issued By: Frank Haney

Reviewed By: Kelly Ware

Produced by: Global Calibration Gases LLC (PGVP ID: N12011)
1500 15th Avenue Drive East, #109
Palmetto, FL 34221

COASTAL
Specialty Gas

55 N. 4th Street
Beaumont, TX 77701
(409) 838-3757

Certificate of Analysis

Size:	Serial Number:	Concentration Basis:	Standard type:	Reference #:	PO number:
ALS	EB0032820	Mole	EPA Protocol	121411-4	

Component	CAS Number	Requested Concentration	Certified Concentration	Accuracy	Method
HYDROGEN SULFIDE	6-4-7783	65.0 ppm	67.28 ppm	+/- 1 %	TCD
NITROGEN	7727-37-9	Balance gas	Balance gas		

Valve Outlet Connection: CGA 330
Mix Pressure (psig) @ 70°F: 2000
Certification Date: 12/14/2011
Shelf Life: 24 months
Expiration date: 12/14/2013

REFERENCE STANDARD	Std Type	Cylinder #	Concentration
	GMIS	EB0023517	78.9 ppm

INSTRUMENTATION	Instrument / Model	Serial #	Last Date Calibrated	Analytical Method
	Agilent Quad Series	US02002031	12/14/2011	Thermal conductivity

Note: This standard was analyzed according to EPA Traceability Protocol for Assay and Certification of Gaseous Calibration Standards, Procedure G1 (September 1997).

*Do not use this standard when cylinder pressure is below 150 psig.

Issued By: Frank Haney

Reviewed By: Kelly Blaze

Produced by: Global Calibration Gases LLC (PGVP ID: N12011)
1500 15th Avenue Drive East, #100
Palmetto, FL 34221

GOLDEN SPECIALTY

Air Quality Test Report

APPENDIX B – Boiler No. 1 CGA Results

CYLINDER GAS AUDIT (CGA)
ASSESSMENT DATA SHEET

Company:	Valero Refining-Texas, L.P.	**Analyzer Info**	
Location:	Houston, TX	**Manufacturer:**	Servomex
Source:	Boiler No. 1	**Model No:**	1440
CEMS type:	O_2	**Range (%):**	0 - 25 %
Audit Date:	May 30, 2012	**Serial No.:**	3659
Project No.:	12VALH173	**Personnel.:**	DL/PP

$$\text{Accuracy} = \left(\frac{\overline{C_m} - C_a}{C_a} \right) \times 100$$

Mid Level Calibration Gas	
40 CFR 60 App. F Sources	40 CFR 266 Appendix IX Sources
Pollutant analyzers - 20 - 30 % of span	CO analyzers (200 ppm span) - 60 - 80 ppm
Oxygen analyzers - 4 - 6 % O_2	CO analyzers (3,000 ppm span) - 900 - 1200 ppm
Carbon dioxide analyzers - 5 -8 % CO_2	Oxygen analyzers - 8 - 10 % O_2

	Response			
Trial No. 1:	4.95	Gas type:	Protocol	
Trial No. 2:	4.98	Concentration (C_a):	4.96	%
Trial No. 3:	4.99	Tank serial #:	EB0001186	
Average (C_m) :	4.97	Expiration Date:	December 7, 2014	
Accuracy %:	0.27			

High Level Calibration Gas	
40 CFR 60 App. F Sources	40 CFR 266 Appendix IX Sources
Pollutant analyzers - 50 - 60 % of span	CO analyzers (200 ppm span) - 140 - 160 ppm
Oxygen analyzers - 8 - 12 % O_2	CO analyzers (3,000 ppm span) - 2100 - 2400 ppm
Carbon dioxide analyzers - 10 -14 % CO_2	Oxygen analyzers - 14 - 16 % O_2

	Response			
Trial No. 1:	10.03	Gas type:	Protocol	
Trial No. 2:	10.03	Concentration (C_a):	9.99	%
Trial No. 3:	10.03	Tank serial #:	EB0005877	
Average (C_m) :	10.03	Expiration Date:	December 7, 2014	
Accuracy %:	0.40			

40 CFR 266 Allowable Limit - 0.5 % O_2 or 5% of span for CO

40 CFR 60 Allowable limit - 15 % average response value, ± 5 ppm, or ≤ 0.7% O_2 or CO_2

CYLINDER GAS AUDIT (CGA)
ASSESSMENT DATA SHEET

Company:	Valero Refining-Texas, L.P.	**Analyzer Info**	
Location:	Houston, TX	**Manufacturer:**	Thermo Scientific
Source:	Boiler No. 1	**Model No:**	42C
CEMS type:	NO_x	**Range (ppm):**	0 - 500 ppm
Audit Date:	May 30, 2012	**Serial No.:**	0432408934
Project No.:	12VALH173	**Personnel.:**	DL/PP

$$\text{Accuracy} = \left(\frac{\overline{C_m} - C_a}{C_a}\right) \times 100$$

Mid Level Calibration Gas	
40 CFR 60 App. F Sources	40 CFR 266 Appendix IX Sources
Pollutant analyzers - 20 - 30 % of span	CO analyzers (200 ppm span) - 60 - 80 ppm
Oxygen analyzers - 4 - 6 % O_2	CO analyzers (3,000 ppm span) - 900 - 1200 ppm
Carbon dioxide analyzers - 5 -8 % CO_2	Oxygen analyzers - 8 - 10 % O_2

	Response			
Trial No. 1:	124.30	Gas type:	Protocol	
Trial No. 2:	124.20	Concentration (C_a):	125.60	ppm
Trial No. 3:	124.10	Tank serial #:	CC346757	
Average (C_m) :	124.20	Expiration Date:	December 15, 2013	
Accuracy %:	-1.11			

High Level Calibration Gas	
40 CFR 60 App. F Sources	40 CFR 266 Appendix IX Sources
Pollutant analyzers - 50 - 60 % of span	CC analyzers (200 ppm span) - 140 - 160 ppm
Oxygen analyzers - 8 - 12 % O_2	CO analyzers (3,000 ppm span) - 2100 - 2400 ppm
Carbon dioxide analyzers - 10 -14 % CO_2	Oxygen analyzers - 14 - 16 % O_2

	Response			
Trial No. 1:	279.00	Gas type:	Protocol	
Trial No. 2:	278.90	Concentration (C_a):	285.60	ppm
Trial No. 3:	278.90	Tank serial #:	CC329567	
Average (C_m) :	278.93	Expiration Date:	December 15, 2013	
Accuracy %:	-2.33			

40 CFR 266 Allowable Limit - 0.5 % O_2 or 5% of span for CO

40 CFR 60 Allowable limit - 15 % average response value, ± 5 ppm, or ≤ 0.7% O_2 or CO_2

CYLINDER GAS AUDIT (CGA)
ASSESSMENT DATA SHEET

Company:	Valero Refining-Texas, L.P.	**Analyzer Info**	
Location:	Houston, TX	**Manufacturer:**	Thermo Scientific
Source:	Boiler No. 1	**Model No:**	48C
CEMS type:	CO	**Range (ppm):**	0 - 500 ppm
Audit Date:	May 30, 2012	**Serial No.:**	0432408935
Project No.:	12VALH173	**Personnel.:**	DL/PP

$$\text{Accuracy} = \left(\frac{\overline{C_m} - C_a}{C_a}\right) \times 100$$

Mid Level Calibration Gas	
40 CFR 60 App. F Sources	40 CFR 266 Appendix IX Sources
Pollutant analyzers - 20 - 30 % of span	CO analyzers (200 ppm span) - 60 - 80 ppm
Oxygen analyzers - 4 - 6 % O_2	CO analyzers (3,000 ppm span) - 900 - 1200 ppm
Carbon dioxide analyzers - 5 -8 % CO_2	Oxygen analyzers - 8 - 10 % O_2

	Response			
Trial No. 1:	139.90	Gas type:	Protocol	
Trial No. 2:	140.40	Concentration (C_a):	128.80	ppm
Trial No. 3:	140.50	Tank serial #:	CC346757	
Average (C_m) :	140.27	Expiration Date:	December 15, 2013	
Accuracy %:	8.90			

High Level Calibration Gas	
40 CFR 60 App. F Sources	40 CFR 266 Appendix IX Sources
Pollutant analyzers - 50 - 60 % of span	CO analyzers (200 ppm span) - 140 - 160 ppm
Oxygen analyzers - 8 - 12 % O_2	CO analyzers (3,000 ppm span) - 2100 - 2400 ppm
Carbon dioxide analyzers - 10 -14 % CO_2	Oxygen analyzers - 14 - 16 % O_2

	Response			
Trial No. 1:	283.50	Gas type:	Protocol	
Trial No. 2:	283.70	Concentration (C_a):	279.20	ppm
Trial No. 3:	283.70	Tank serial #:	CC329567	
Average (C_m) :	283.63	Expiration Date:	December 15, 2013	
Accuracy %:	1.59			

40 CFR 266 Allowable Limit - 0.5 % O_2 or 5% of span for CO
40 CFR 60 Allowable limit - 15 % average response value, ± 5 ppm, or ≤ 0.7% O_2 or CO_2

FORM# GSC-WP004-001
REV 2010-02, EFF 8/23/11

CYLINDER GAS AUDIT (CGA)
ASSESSMENT DATA SHEET

Company: Valero
Location: Houston TX
Source: Stack 1
CEMS type: O_2
Audit Date: 5/11/12
Project No.: 12VG1123

Analyzer Info
Manufacturer: Siemens
Model No: 1440
Range (ppm): 25 %
Serial No.: 3619
Personnel: MA

$$\text{Accuracy} = \left(\frac{\overline{C_m} - C_a}{C_a}\right) \times 100$$

Mid Level Calibration Gas	
40 CFR 60 App. F Sources	40 CFR 266 Appendix IX Sources
Pollutant analyzers - 20 - 30 % of span	CO analyzers (200 ppm span) - 60 - 80 ppm
Oxygen analyzers - 4 - 6 % O_2	CO analyzers (3,000 ppm span) - 900 - 1200 ppm
Carbon dioxide analyzers - 5 -8 % CO_2	Oxygen analyzers - 8 - 10 % O_2

	Response
Trial No. 1:	4.95
Trial No. 2:	4.98
Trial No. 3:	4.99
Average (C_m):	4.973

Gas type: Protocol
Concentration (C_a): 4.94 %
Tank serial #: EB0001158 ppm
Expiration Date: 12/14

Accuracy %: ~~0.33~~ 0.27
DS 6.20.12

High Level Calibration Gas	
40 CFR 60 App. F Sources	40 CFR 266 Appendix IX Sources
Pollutant analyzers - 50 - 60 % of span	CO analyzers (200 ppm span) - 140 - 160 ppm
Oxygen analyzers - 8 - 12 % O_2	CO analyzers (3,000 ppm span) - 2100 - 2400 ppm
Carbon dioxide analyzers - 10 -14 % CO_2	Oxygen analyzers - 14 - 16 % O_2

	Response
Trial No. 1:	10.03
Trial No. 2:	10.03
Trial No. 3:	10.03
Average (C_m):	10.03

Gas type: Protocol
Concentration (C_a): 9.99 % ppm
Tank serial #: CB0005877
Expiration Date: 12/14

Accuracy %: ~~0.04~~ 0.40
BT 6.20.12

40 CFR 266 Allowable Limit - 0.5 % O_2 or 5% of span for CO
40 CFR 60 Allowable limit - 15 % average response value or +/- 5 ppm

FORM# GSC-WP004-001
REV 2010-02, EFF 8/23/11

CYLINDER GAS AUDIT (CGA)
ASSESSMENT DATA SHEET

Company: Valero
Location: Houston, TX
Source: Boiler
CEMS type: NOx
Audit Date: 5/31/12
Project No.: 12VA1373

Analyzer Info
Manufacturer: Thermo
Model No: 42C
Range (ppm): 500
Serial No.: 0432409914
Personnel: PL PD

$$\text{Accuracy} = \left(\frac{\overline{C_m} - C_a}{C_a}\right) \times 100$$

Mid Level Calibration Gas	
40 CFR 60 App. F Sources	40 CFR 266 Appendix IX Sources
Pollutant analyzers - 20 - 30 % of span	CO analyzers (200 ppm span) - 60 - 80 ppm
Oxygen analyzers - 4 - 6 % O_2	CO analyzers (3,000 ppm span) - 900 - 1200 ppm
Carbon dioxide analyzers - 5 -8 % CO_2	Oxygen analyzers - 8 - 10 % O_2

	Response		
Trial No. 1:	124.3	Gas type:	Protocol
Trial No. 2:	124.2	Concentration (C_a):	125.6
Trial No. 3:	124.1	Tank serial #:	CC374675 ppm
Average (C_m):	124.10	Expiration Date:	12/13
Accuracy %:	~~-1.27~~ 1.1 RJ 6.20.12		

High Level Calibration Gas	
40 CFR 60 App. F Sources	40 CFR 266 Appendix IX Sources
Pollutant analyzers - 50 - 60 % of span	CO analyzers (200 ppm span) - 140 - 160 ppm
Oxygen analyzers - 8 - 12 % O_2	CO analyzers (3,000 ppm span) - 2100 - 2400 ppm
Carbon dioxide analyzers - 10 -14 % CO_2	Oxygen analyzers - 14 - 16 % O_2

	Response		
Trial No. 1:	279.0	Gas type:	Protocol
Trial No. 2:	278	Concentration (C_a):	285.6 ppm
Trial No. 3:	278.9	Tank serial #:	CC329567
Average (C_m):	278.93	Expiration Date:	12/13
Accuracy %:	-2.3 %		

40 CFR 266 Allowable Limit - 0.5 % O_2 or 5% of span for CO
40 CFR 60 Allowable limit - 15 % average response value or +/- 5 ppm

FORM# GSC-WP004-001
REV 2010-02, EFF 8/23/11

CYLINDER GAS AUDIT (CGA) ASSESSMENT DATA SHEET

Company: Valero
Location: Houston, TX
Source: Boiler 1
CEMS type: CO
Audit Date: 5/30/12
Project No.: 12vcah173

Analyzer Info
Manufacturer: Thermo
Model No: 48C
Range (ppm): 500
Serial No.: 0432408935
Personnel: DL PP

$$\text{Accuracy} = \left(\frac{\overline{C_m} - C_a}{C_a}\right) \times 100$$

Mid Level Calibration Gas	
40 CFR 60 App. F Sources	40 CFR 266 Appendix IX Sources
Pollutant analyzers - 20 - 30 % of span	CO analyzers (200 ppm span) - 60 - 80 ppm
Oxygen analyzers - 4 - 6 % O_2	CO analyzers (3,000 ppm span) - 900 - 1200 ppm
Carbon dioxide analyzers - 5 -8 % CO_2	Oxygen analyzers - 8 - 10 % O_2

	Response
Trial No. 1:	139.9
Trial No. 2:	140.4
Trial No. 3:	142.5
Average (C_m) :	140.27

Gas type: Protocol
Concentration (C_a): 128.8
Tank serial #: CC346751 ppm
Expiration Date: 12/13

Accuracy %: ~~10.8%~~ 8.90
6/21/12

High Level Calibration Gas	
40 CFR 60 App. F Sources	40 CFR 266 Appendix IX Sources
Pollutant analyzers - 50 - 60 % of span	CO analyzers (200 ppm span) - 140 - 160 ppm
Oxygen analyzers - 8 - 12 % O_2	CO analyzers (3,000 ppm span) - 2100 - 2400 ppm
Carbon dioxide analyzers - 10 -14 % CO_2	Oxygen analyzers - 14 - 16 % O_2

	Response
Trial No. 1:	283.5
Trial No. 2:	283.7
Trial No. 3:	283.7
Average (C_m) :	283.63

Gas type: Protocol
Concentration (C_a): 279.2 ppm
Tank serial #: CC329567
Expiration Date: 12/13

Accuracy %: 1.6%

40 CFR 266 Allowable Limit - 0.5 % O_2 or 5% of span for CO
40 CFR 60 Allowable limit - 15 % average response value or +/- 5 ppm

Boiler 1 05-30-12

REALTIME DATA SAMPLES AND AVERAGES REPORT
Cirrus - Process Analysts, Inc.

Title: BF01 CGA 12-15-11
Sample Interval: 10 seconds
Average Interval: 60 seconds

Date	Time	81BF01-O2 % dry	81BF01-CO ppm dry	81BF01-NOx ppm dry		
12-05-30	07:46:30	2.48954	1.61740	7.49631	0.00000	0.00000
12-05-30	07:47:30	2.41651	2.45876	7.50148	0.00000	0.00000
12-05-30	07:48:30	2.48250	2.52670	7.50664	0.00000	0.00000
12-05-30	07:49:30	2.45954	3.13289	7.08322	0.00000	0.00000
12-05-30	07:50:30	2.51014	1.85779	7.51180	0.00000	0.00000
12-05-30	07:51:30	2.43946	1.77940	7.50148	0.00000	0.00000
12-05-30	07:52:30	2.48719	2.36470	7.51697	0.00000	0.00000
12-05-30	07:53:30	2.50310	2.03024	7.50148	0.00000	0.00000
12-05-30	07:54:30	2.48510	2.61031	7.50664	0.00000	0.00000
12-05-30	07:55:30	2.39981	2.94999	7.51180	0.00000	0.00000
12-05-30	07:56:30	2.37712	3.12767	6.99028	0.00000	0.00000
12-05-30	07:57:30	2.42276	3.61890	7.09355	0.00000	0.00000
12-05-30	07:58:30	2.38625	2.53192	7.08322	0.00000	0.00000
12-05-30	07:59:30	2.36147	3.61367	6.99544	0.00000	0.00000
12-05-30	08:00:30	2.40164	4.54910	7.24330	0.00000	0.00000
12-05-30	08:01:30	2.31243	3.30535	7.50148	0.00000	0.00000
12-05-30	08:02:30	2.41520	5.72491	7.50148	0.00000	0.00000
12-05-30	08:03:30	2.41859	3.22696	7.24330	0.00000	0.00000
12-05-30	08:04:30	2.51249	1.35611	7.50664	0.00000	0.00000
12-05-30	08:05:30	2.44546	2.12953	7.49631	0.00000	0.00000
12-05-30	08:06:30	2.43111	2.69915	7.50148	0.00000	0.00000
12-05-30	08:07:30	2.44520	2.96044	7.49115	0.00000	0.00000
12-05-30	08:08:30	2.41207	2.27586	7.49115	0.00000	0.00000
12-05-30	08:09:30	2.40555	3.22173	7.51180	0.00000	0.00000
12-05-30	08:10:30	2.47232	3.77567	7.47566	0.00000	0.00000
12-05-30	08:11:30	2.64656	5.69356	11.62206	0.00000	0.00000
12-05-30	08:12:30	0.01110	121.37812	110.51092	0.00000	0.00000
12-05-30	08:13:30	0.00000	139.71561	123.48715	0.00000	0.00000
12-05-30	08:14:30	-0.00932	139.97691	123.82278	0.00000	0.00000
12-05-30	08:15:30	0.00000	139.98213	124.25136	0.00000	0.00000
12-05-30	08:16:30	0.00000	139.98213	124.25653	0.00000	0.00000
12-05-30	08:17:30	0.00000	139.99258	124.10162	0.00000	0.00000
12-05-30	08:18:30	0.00000	139.97168	123.75566	0.00000	0.00000
12-05-30	08:19:30	0.00000	139.96645	123.76082	0.00000	0.00000
12-05-30	08:20:30	0.00000	139.99781	123.76599	0.00000	0.00000
12-05-30	08:21:30	0.00000	140.07620	123.76082	0.00000	0.00000
12-05-30	08:22:30	0.00000	201.22905	192.40624	0.00000	0.00000
12-05-30	08:23:30	0.00000	282.82022	278.13297	0.00000	0.00000
12-05-30	08:24:30	0.00000	283.49957	279.12439	0.00000	0.00000
12-05-30	08:25:30	0.00000	283.47867	279.04177	0.00000	0.00000
12-05-30	08:26:30	0.00000	241.20156	199.27388	0.00000	0.00000
12-05-30	08:27:30	0.00000	142.79363	124.66446	0.00000	0.00000
12-05-30	08:28:30	0.00000	140.40020	124.25136	0.00000	0.00000
12-05-30	08:29:30	0.00000	140.40020	124.17391	0.00000	0.00000
12-05-30	08:30:30	0.00000	200.47653	220.66167	0.00000	0.00000
12-05-30	08:31:30	0.00000	282.74182	278.39115	0.00000	0.00000
12-05-30	08:32:30	0.00000	283.66158	278.88169	0.00000	0.00000
12-05-30	08:33:30	0.00000	278.45140	266.26176	0.00000	0.00000
12-05-30	08:34:30	0.00000	159.76719	125.90889	0.00000	0.00000
12-05-30	08:35:30	0.00000	140.47336	124.26685	0.00000	0.00000
12-05-30	08:36:30	0.00000	140.46291	124.10678	0.00000	0.00000

Boiler 1 05-30-12

12-05-30 08:37:30	0.00000	176.03002	194.07926	0.00000	0.00000
12-05-30 08:38:30	0.00000	278.55592	277.95225	0.00000	0.00000
12-05-30 08:39:30	0.00000	283.65635	278.88686	0.00000	0.00000
12-05-30 08:40:30	0.00000	283.75564	279.11407	0.00000	0.00000
12-05-30 08:41:30	2.08999	264.69697	217.48603	0.00000	0.00000
12-05-30 08:42:30	4.93978	30.46407	10.78039	0.00000	0.00000
12-05-30 08:43:30	4.95439	0.68197	1.65624	0.00000	0.00000
12-05-30 08:44:30	4.95830	0.52520	1.14504	0.00000	0.00000
12-05-30 08:45:30	4.82815	0.18160	0.99529	0.00000	0.00000
12-05-30 08:46:30	9.42269	13.81975	9.78897	0.00000	0.00000
12-05-30 08:47:30	10.01660	0.27044	0.90235	0.00000	0.00000
12-05-30 08:48:30	10.02495	0.00392	0.50475	0.00000	0.00000
12-05-30 08:49:30	10.02912	0.01176	0.50475	0.00000	0.00000
12-05-30 08:50:30	10.03329	0.01960	0.50991	0.00000	0.00000
12-05-30 08:51:30	10.03616	0.01176	0.50475	0.00000	0.00000
12-05-30 08:52:30	10.03747	0.01960	0.48925	0.00000	0.00000
12-05-30 08:53:30	5.99432	0.00392	0.50475	0.00000	0.00000
12-05-30 08:54:30	4.99195	0.01176	0.49442	0.00000	0.00000
12-05-30 08:55:30	4.98491	0.01176	0.49958	0.00000	0.00000
12-05-30 08:56:30	8.98032	0.01176	0.50475	0.00000	0.00000
12-05-30 08:57:30	10.02417	0.01176	0.51507	0.00000	0.00000
12-05-30 08:58:30	10.03095	0.01960	0.50991	0.00000	0.00000
12-05-30 08:59:30	8.04185	0.00784	0.49442	0.00000	0.00000
12-05-30 09:00:30	5.00760	0.00000	0.33951	0.00000	0.00000
12-05-30 09:01:30	4.99352	0.00784	0.00323	0.00000	0.00000
12-05-30 09:02:30	4.99195	0.00784	0.00323	0.00000	0.00000
12-05-30 09:03:30	8.97562	0.00784	0.25108	0.00000	0.00000
12-05-30 09:04:30	10.03069	0.00392	0.00258	0.00000	0.00000
12-05-30 09:05:30	10.03642	0.00000	0.00839	0.00000	0.00000
12-05-30 09:06:30	9.63735	0.01176	0.00775	0.00000	0.00000
Average	3.23004	73.98591	70.62773	0.00000	0.00000

APPENDIX C – Boiler No. 2 CGA Results

CYLINDER GAS AUDIT (CGA)
ASSESSMENT DATA SHEET

Company:	Valero Refining-Texas, L.P.	**Analyzer Info**	
Location:	Houston, TX	**Manufacturer:**	Servomex
Source:	Boiler No. 2	**Model No:**	1440
CEMS type:	O_2	**Range (%):**	0 - 25 %
Audit Date:	May 31, 2012	**Serial No.:**	3696
Project No.:	12VALH173	**Personnel.:**	DL/PP

$$\text{Accuracy} = \left(\frac{\overline{C_m} - C_a}{C_a}\right) \times 100$$

Mid Level Calibration Gas	
40 CFR 60 App. F Sources	40 CFR 266 Appendix IX Sources
Pollutant analyzers - 20 - 30 % of span	CO analyzers (200 ppm span) - 60 - 80 ppm
Oxygen analyzers - 4 - 6 % O_2	CO analyzers (3,000 ppm span) - 900 - 1200 ppm
Carbon dioxide analyzers - 5 -8 % CO_2	Oxygen analyzers - 8 - 10 % O_2

	Response			
Trial No. 1:	4.95	Gas type:	Protocol	
Trial No. 2:	5.05	Concentration (C_a):	4.96	%
Trial No. 3:	5.06	Tank serial #:	EB0001188	
Average (C_m) :	5.02	Expiration Date:	December 7, 2014	
Accuracy %:	1.21			

High Level Calibration Gas	
40 CFR 60 App. F Sources	40 CFR 266 Appendix IX Sources
Pollutant analyzers - 50 - 60 % of span	CO analyzers (200 ppm span) - 140 - 160 ppm
Oxygen analyzers - 8 - 12 % O_2	CO analyzers (3,000 ppm span) - 2100 - 2400 ppm
Carbon dioxide analyzers - 10 -14 % CO_2	Oxygen analyzers - 14 - 16 % O_2

	Response			
Trial No. 1:	9.94	Gas type:	Protocol	
Trial No. 2:	9.98	Concentration (C_a):	9.99	%
Trial No. 3:	10.01	Tank serial #:	EB0005877	
Average (C_m) :	9.98	Expiration Date:	December 7, 2014	
Accuracy %:	-0.13			

40 CFR 266 Allowable Limit - 0.5 % O_2 or 5% of span for CO

40 CFR 60 Allowable limit - 15 % average response value, ± 5 ppm, or ≤ 0.7% O_2 or CO_2

CYLINDER GAS AUDIT (CGA)
ASSESSMENT DATA SHEET

Company:	Valero Refining-Texas, L.P.	**Analyzer Info**	
Location:	Houston, TX	**Manufacturer:**	Thermo Scientific
Source:	Boiler No. 2	**Model No:**	42C
CEMS type:	NO_x	**Range (ppm):**	0 - 500 ppm
Audit Date:	May 31, 2012	**Serial No.:**	0505310679
Project No.:	12VALH173	**Personnel.:**	DL/PP

$$\text{Accuracy} = \left(\frac{\overline{C_m} - C_a}{C_a}\right) \times 100$$

Mid Level Calibration Gas	
40 CFR 60 App. F Sources	40 CFR 266 Appendix IX Sources
Pollutant analyzers - 20 - 30 % of span	CO analyzers (200 ppm span) - 60 - 80 ppm
Oxygen analyzers - 4 - 6 % O_2	CO analyzers (3,000 ppm span) - 900 - 1200 ppm
Carbon dioxide analyzers - 5 -8 % CO_2	Oxygen analyzers - 8 - 10 % O_2

	Response			
Trial No. 1:	120.20	Gas type:	Protocol	
Trial No. 2:	122.70	Concentration (C_a):	125.60	ppm
Trial No. 3:	121.90	Tank serial #:	CC346757	
Average (C_m) :	121.60	Expiration Date:	December 15, 2013	
Accuracy %:	-3.18			

High Level Calibration Gas	
40 CFR 60 App. F Sources	40 CFR 266 Appendix IX Sources
Pollutant analyzers - 50 - 60 % of span	CO analyzers (200 ppm span) - 140 - 160 ppm
Oxygen analyzers - 8 - 12 % O_2	CO analyzers (3,000 ppm span) - 2100 - 2400 ppm
Carbon dioxide analyzers - 10 -14 % CO_2	Oxygen analyzers - 14 - 16 % O_2

	Response			
Trial No. 1:	283.70	Gas type:	Protocol	
Trial No. 2:	286.90	Concentration (C_a):	285.60	ppm
Trial No. 3:	287.70	Tank serial #:	CC329567	
Average (C_m) :	286.10	Expiration Date:	December 15, 2013	
Accuracy %:	0.18			

40 CFR 266 Allowable Limit - 0.5 % O_2 or 5% of span for CO

40 CFR 60 Allowable limit - 15 % average response value, ± 5 ppm, or ≤ 0.7% O_2 or CO_2

CYLINDER GAS AUDIT (CGA)
ASSESSMENT DATA SHEET

Company: Valero Refining-Texas, L.P.
Location: Houston, TX
Source: Boiler No. 2
CEMS type: CO
Audit Date: May 31, 2012
Project No.: 12VALH173

Analyzer Info
Manufacturer: Thermo Scientific
Model No: 48C
Range (ppm): 0 - 500 ppm
Serial No.: 0505310682
Personnel.: DL/PP

$$\text{Accuracy} = \left(\frac{\overline{C_m} - C_a}{C_a}\right) \times 100$$

Mid Level Calibration Gas	
40 CFR 60 App. F Sources	40 CFR 266 Appendix IX Sources
Pollutant analyzers - 20 - 30 % of span	CO analyzers (200 ppm span) - 60 - 80 ppm
Oxygen analyzers - 4 - 6 % O_2	CO analyzers (3,000 ppm span) - 900 - 1200 ppm
Carbon dioxide analyzers - 5 -8 % CO_2	Oxygen analyzers - 8 - 10 % O_2

	Response
Trial No. 1:	118.30
Trial No. 2:	115.40
Trial No. 3:	124.30
Average (C_m) :	119.33

Gas type: Protocol
Concentration (C_a): 128.80 ppm
Tank serial #: CC346757
Expiration Date: December 15, 2013

Accuracy %: -7.35

High Level Calibration Gas	
40 CFR 60 App. F Sources	40 CFR 266 Appendix IX Sources
Pollutant analyzers - 50 - 60 % of span	CO analyzers (200 ppm span) - 140 - 160 ppm
Oxygen analyzers - 8 - 12 % O_2	CO analyzers (3,000 ppm span) - 2100 - 2400 ppm
Carbon dioxide analyzers - 10 -14 % CO_2	Oxygen analyzers - 14 - 16 % O_2

	Response
Trial No. 1:	286.00
Trial No. 2:	295.30
Trial No. 3:	294.70
Average (C_m) :	292.00

Gas type: Protocol
Concentration (C_a): 279.20 ppm
Tank serial #: CC329567
Expiration Date: December 15, 2013

Accuracy %: 4.58

40 CFR 266 Allowable Limit - 0.5 % O_2 or 5% of span for CO
40 CFR 60 Allowable limit - 15 % average response value, ± 5 ppm, or ≤ 0.7% O_2 or CO_2

FORM# GSC-WP004-001
REV 2010-02, EFF 8/23/11

CYLINDER GAS AUDIT (CGA)
ASSESSMENT DATA SHEET

Company: Valero
Location: Houston, TX
Source: Boiler 2
CEMS type: O2
Audit Date: ~~5/31/17~~ BJ 6.20.17
Project No.: 17VGH173 5-31-17

Analyzer Info
Manufacturer: Teledyne
Model No: 1440
Range (ppm): 25/0
Serial No.: 3696
Personnel: BL BP

$$\text{Accuracy} = \left(\frac{C_m - C_a}{C_a}\right) \times 100$$

Mid Level Calibration Gas	
40 CFR 60 App. F Sources	40 CFR 266 Appendix IX Sources
Pollutant analyzers - 20 - 30 % of span	CO analyzers (200 ppm span) - 60 - 80 ppm
Oxygen analyzers - 4 - 6 % O_2	CO analyzers (3,000 ppm span) - 900 - 1200 ppm
Carbon dioxide analyzers - 5 -8 % CO_2	Oxygen analyzers - 8 - 10 % O_2

Response
Trial No. 1: 4.95
Trial No. 2: 5.05
Trial No. 3: 5.06
Average (C_m): ~~15.06~~ 5.02 BJ 5-31-17
Accuracy %: 1.20

Gas type: Protocol
Concentration (C_a): 4.9%
Tank serial #: EB0001168 ppm
Expiration Date: 12/14

High Level Calibration Gas	
40 CFR 60 App. F Sources	40 CFR 266 Appendix IX Sources
Pollutant analyzers - 50 - 60 % of span	CO analyzers (200 ppm span) - 140 - 160 ppm
Oxygen analyzers - 8 - 12 % O_2	CO analyzers (3,000 ppm span) - 2100 - 2400 ppm
Carbon dioxide analyzers - 10 -14 % CO_2	Oxygen analyzers - 14 - 16 % O_2

Response
Trial No. 1: 9.94
Trial No. 2: 9.98
Trial No. 3: 10.01
Average (C_m): 9.98
Accuracy %: -0.13

Gas type: Protocol
Concentration (C_a): 9.99% ppm
Tank serial #: EB0025877
Expiration Date: 12/14

40 CFR 266 Allowable Limit - 0.5 % O_2 or 5% of span for CO
40 CFR 60 Allowable limit - 15 % average response value or +/- 5 ppm

FORM# GSC-WP004-001
REV 2010-02, EFF 8/23/11

CYLINDER GAS AUDIT (CGA) ASSESSMENT DATA SHEET

Company: Valero
Location: Houston, TX
Source: Boiler 2
CEMS type: NOx
Audit Date: 5-31-12
Project No.: 12 VC473

Analyzer Info
Manufacturer: Thermo
Model No: 42C
Range (ppm): 500
Serial No.: 0505310679
Personnel: DLPP

$$\text{Accuracy} = \left(\frac{\overline{C_m} - C_a}{C_a}\right) \times 100$$

Mid Level Calibration Gas	
40 CFR 60 App. F Sources	40 CFR 266 Appendix IX Sources
Pollutant analyzers - 20 - 30 % of span	CO analyzers (200 ppm span) - 60 - 80 ppm
Oxygen analyzers - 4 - 6 % O_2	CO analyzers (3,000 ppm span) - 900 - 1200 ppm
Carbon dioxide analyzers - 5 -8 % CO_2	Oxygen analyzers - 8 - 10 % O_2

Response
Trial No. 1: 120.2
Trial No. 2: 122.9
Trial No. 3: 121.9
Average (C_m): 121.60

Gas type: Protocol
Concentration (C_a): 125.6
Tank serial #: CC346757 ppm
Expiration Date: 12/13

Accuracy %: -3.18

High Level Calibration Gas	
40 CFR 60 App. F Sources	40 CFR 266 Appendix IX Sources
Pollutant analyzers - 50 - 60 % of span	CO analyzers (200 ppm span) - 140 - 160 ppm
Oxygen analyzers - 8 - 12 % O_2	CO analyzers (3,000 ppm span) - 2100 - 2400 ppm
Carbon dioxide analyzers - 10 -14 % CO_2	Oxygen analyzers - 14 - 16 % O_2

Response
Trial No. 1: 283.7
Trial No. 2: 286.9
Trial No. 3: 287.7
Average (C_m): 286.10

Gas type: Protocol
Concentration (C_a): 285.6 ppm
Tank serial #: CC329567
Expiration Date: ~~12/12~~ 12-13
DJ 6-2-12

Accuracy %: 0.17

40 CFR 266 Allowable Limit - 0.5 % O_2 or 5% of span for CO
40 CFR 60 Allowable limit - 15 % average response value or +/- 5 ppm

FORM# GSC-WP004-001
REV 2010-02, EFF 8/23/11

CYLINDER GAS AUDIT (CGA)
ASSESSMENT DATA SHEET

Company: Valero
Location: Houston, TX
Source: Boiler 2
CEMS type: NO
Audit Date: 5.31.12
Project No.: 12USH173

Analyzer Info
Manufacturer: Thermo
Model No: 48C
Range (ppm): 500
Serial No.: 0505310682
Personnel: DL M

$$\text{Accuracy} = \left(\frac{C_m - C_a}{C_a}\right) \times 100$$

Mid Level Calibration Gas	
40 CFR 60 App. F Sources	40 CFR 266 Appendix IX Sources
Pollutant analyzers - 20 - 30 % of span	CO analyzers (200 ppm span) - 60 - 80 ppm
Oxygen analyzers - 4 - 6 % O_2	CO analyzers (3,000 ppm span) - 900 - 1200 ppm
Carbon dioxide analyzers - 5 -8 % CO_2	Oxygen analyzers - 8 - 10 % O_2

BJ 6-20-12

Response
Trial No. 1: 118.3
Trial No. 2: 115.4
Trial No. 3: 124.3
Average (C_m): 119.33

Gas type: Protocol
Concentration (C_a): ~~126.5~~ 128.8 ppm
Tank serial #: CC346757
Expiration Date: 12/13

Accuracy %: ~~5.76~~ ~~5.74~~ 7.35%

6/21/12 BJ 6-20-12

High Level Calibration Gas	
40 CFR 60 App. F Sources	40 CFR 266 Appendix IX Sources
Pollutant analyzers - 50 - 60 % of span	CO analyzers (200 ppm span) - 140 - 160 ppm
Oxygen analyzers - 8 - 12 % O_2	CO analyzers (3,000 ppm span) - 2100 - 2400 ppm
Carbon dioxide analyzers - 10 -14 % CO_2	Oxygen analyzers - 14 - 16 % O_2

Response
Trial No. 1: 286.0
Trial No. 2: 295.3
Trial No. 3: 294.7
Average (C_m): 292.00

Gas type: Protocol
Concentration (C_a): 279.2 ppm
Tank serial #: CC729567
Expiration Date: 12/13

Accuracy %: 4.58

40 CFR 266 Allowable Limit - 0.5 % O_2 or 5% of span for CO
40 CFR 60 Allowable limit - 15 % average response value or +/- 5 ppm

BOILER2 5-31-12

REALTIME DATA SAMPLES AND AVERAGES REPORT
Cirrus - Process Analysts, Inc.

Title: BOILER2CGA5-31-12
Sample Interval: 10 seconds
Average Interval: 60 seconds

Date	Time	50BF02-O2 % dry	50BF02-NOx ppm dry	50BF02-CO ppm dry		
12-05-31	06:49:30	4.48750	6.59954	14.03142	0.00000	0.00000
12-05-31	06:50:30	4.51466	7.13518	15.55906	0.00000	0.00000
12-05-31	06:51:30	4.37073	7.11943	17.67018	0.00000	0.00000
12-05-31	06:52:30	4.48044	7.28748	14.70507	0.00000	0.00000
12-05-31	06:53:30	4.55959	7.13518	13.77681	0.00000	0.00000
12-05-31	06:54:30	6.59162	7.04066	20.38598	0.00000	0.00000
12-05-31	06:55:30	0.79698	66.43951	98.98527	0.00000	0.00000
12-05-31	06:56:30	0.01985	108.44040	104.23654	0.00000	0.00000
12-05-31	06:57:30	0.00048	191.29212	183.43520	0.00000	0.00000
12-05-31	06:58:30	0.00000	279.08542	257.17573	0.00000	0.00000
12-05-31	06:59:30	0.04641	285.81775	273.28492	0.00000	0.00000
12-05-31	07:00:30	0.00000	154.28533	149.19057	0.00000	0.00000
12-05-31	07:01:30	0.00000	120.30337	118.25053	0.00000	0.00000
12-05-31	07:02:30	0.00000	120.15107	118.07018	0.00000	0.00000
12-05-31	07:03:30	0.00000	119.98828	117.64053	0.00000	0.00000
12-05-31	07:04:30	0.00000	120.07230	124.18074	0.00000	0.00000
12-05-31	07:05:30	0.00000	151.34453	181.82800	0.00000	0.00000
12-05-31	07:06:30	0.00000	283.69618	286.01527	0.00000	0.00000
12-05-31	07:07:30	0.00000	286.87328	289.42064	0.00000	0.00000
12-05-31	07:08:30	0.00257	249.38862	226.00229	0.00000	0.00000
12-05-31	07:09:30	0.00000	122.66651	115.42863	0.00000	0.00000
12-05-31	07:10:30	0.00000	120.92829	123.41692	0.00000	0.00000
12-05-31	07:11:30	0.00000	122.98684	140.02472	0.00000	0.00000
12-05-31	07:12:30	0.00000	265.01160	279.48567	0.00000	0.00000
12-05-31	07:13:30	0.00000	286.87853	295.84947	0.00000	0.00000
12-05-31	07:14:30	0.00000	286.88378	295.25008	0.00000	0.00000
12-05-31	07:15:30	0.00048	256.21022	248.54032	0.00000	0.00000
12-05-31	07:16:30	0.00000	128.84743	127.49063	0.00000	0.00000
12-05-31	07:17:30	0.00000	121.91030	124.33988	0.00000	0.00000
12-05-31	07:18:30	0.00000	123.07087	126.37673	0.00000	0.00000
12-05-31	07:19:30	0.00000	225.86749	240.48836	0.00000	0.00000
12-05-31	07:20:30	0.00000	287.71876	294.75148	0.00000	0.00000
12-05-31	07:21:30	0.00000	288.71128	296.18364	0.00000	0.00000
12-05-31	07:22:30	1.78705	254.14641	246.84824	0.00000	0.00000
12-05-31	07:23:30	4.94803	77.26270	57.54268	0.00000	0.00000
12-05-31	07:24:30	4.95116	1.77348	0.76003	0.00000	0.00000
12-05-31	07:25:30	8.40684	10.11799	8.03224	0.00000	0.00000
12-05-31	07:26:30	9.93288	2.97081	1.70193	0.00000	0.00000
12-05-31	07:27:30	9.94908	0.60241	0.00758	0.00000	0.00000
12-05-31	07:28:30	6.28939	0.50789	0.00379	0.00000	0.00000
12-05-31	07:29:30	5.04102	0.60241	0.01516	0.00000	0.00000
12-05-31	07:30:30	5.05983	0.01800	0.01288	0.00000	0.00000
12-05-31	07:31:30	6.56027	0.01650	0.00000	0.00000	0.00000
12-05-31	07:32:30	9.98382	0.66543	0.00379	0.00000	0.00000
12-05-31	07:33:30	10.00184	0.16354	0.01516	0.00000	0.00000
12-05-31	07:34:30	8.68164	0.01650	0.00000	0.00000	0.00000
12-05-31	07:35:30	5.04415	0.26632	0.00000	0.00000	0.00000
12-05-31	07:36:30	5.06453	0.00450	0.00379	0.00000	0.00000
12-05-31	07:37:30	8.27074	0.00450	0.00758	0.00000	0.00000
12-05-31	07:38:30	10.00576	0.18605	0.00379	0.00000	0.00000
12-05-31	07:39:30	10.01334	0.00150	0.01516	0.00000	0.00000

BOILER2 5-31-12

12-05-31	07:40:30	10.02013	0.00600	0.00000	0.00000	0.00000
12-05-31	07:41:30	5.82781	1.26934	4.14191	0.00000	0.00000
12-05-31	07:42:30	4.68524	6.42099	10.81170	0.00000	0.00000
	Average	3.34066	103.22613	104.84072	0.00000	0.00000

GOLDEN SPECIALTY

Air Quality Test Report

APPENDIX D – Boiler No. 3 CGA Results

CYLINDER GAS AUDIT (CGA)
ASSESSMENT DATA SHEET

Company:	Valero Refining-Texas, L.P.	**Analyzer Info**	
Location:	Houston, TX	**Manufacturer:**	Servomex
Source:	Boiler No. 3	**Model No:**	1440
CEMS type:	O_2	**Range (%):**	0 - 25 %
Audit Date:	May 31, 2012	**Serial No.:**	3693
Project No.:	12VALH173	**Personnel.:**	DL/PP/BJ

$$\text{Accuracy} = \left(\frac{\overline{C_m} - C_a}{C_a} \right) \times 100$$

Mid Level Calibration Gas	
40 CFR 60 App. F Sources	40 CFR 266 Appendix IX Sources
Pollutant analyzers - 20 - 30 % of span	CO analyzers (200 ppm span) - 60 - 80 ppm
Oxygen analyzers - 4 - 6 % O_2	CO analyzers (3,000 ppm span) - 900 - 1200 ppm
Carbon dioxide analyzers - 5 -8 % CO_2	Oxygen analyzers - 8 - 10 % O_2

	Response			
Trial No. 1:	4.94	Gas type:	Protocol	
Trial No. 2:	4.95	Concentration (C_a):	4.96	%
Trial No. 3:	4.95	Tank serial #:	EB0001158	
Average (C_m) :	4.95	Expiration Date:	December 7, 2014	
Accuracy %:	-0.27			

High Level Calibration Gas	
40 CFR 60 App. F Sources	40 CFR 266 Appendix IX Sources
Pollutant analyzers - 50 - 60 % of span	CO analyzers (200 ppm span) - 140 - 160 ppm
Oxygen analyzers - 8 - 12 % O_2	CO analyzers (3,000 ppm span) - 2100 - 2400 ppm
Carbon dioxide analyzers - 10 -14 % CO_2	Oxygen analyzers - 14 - 16 % O_2

	Response			
Trial No. 1:	9.95	Gas type:	Protocol	
Trial No. 2:	9.96	Concentration (C_a):	9.99	%
Trial No. 3:	9.96	Tank serial #:	EB0005877	
Average (C_m) :	9.96	Expiration Date:	December 7, 2014	
Accuracy %:	-0.33			

40 CFR 266 Allowable Limit - 0.5 % O_2 or 5% of span for CO

40 CFR 60 Allowable limit - 15 % average response value, ± 5 ppm, or ≤ 0.7% O_2 or CO_2

CYLINDER GAS AUDIT (CGA)
ASSESSMENT DATA SHEET

Company:	Valero Refining-Texas, L.P.	**Analyzer Info**	
Location:	Houston, TX	**Manufacturer:**	Thermo Scientific
Source:	Boiler No. 3	**Model No:**	42C
CEMS type:	NO_x	**Range (ppm):**	0 - 500 ppm
Audit Date:	May 31, 2012	**Serial No.:**	0530613423
Project No.:	12VALH173	**Personnel.:**	DL/PP/BJ

$$\text{Accuracy} = \left(\frac{\overline{C_m} - C_a}{C_a} \right) \times 100$$

Mid Level Calibration Gas	
40 CFR 60 App. F Sources	40 CFR 266 Appendix IX Sources
Pollutant analyzers - 20 - 30 % of span	CO analyzers (200 ppm span) - 60 - 80 ppm
Oxygen analyzers - 4 - 6 % O_2	CO analyzers (3,000 ppm span) - 900 - 1200 ppm
Carbon dioxide analyzers - 5 -8 % CO_2	Oxygen analyzers - 8 - 10 % O_2

	Response
Trial No. 1:	121.65
Trial No. 2:	122.38
Trial No. 3:	122.62
Average (C_m) :	122.22
Accuracy %:	-2.69

Gas type:	Protocol	
Concentration (C_a):	125.60	ppm
Tank serial #:	CC346257	
Expiration Date:	December 15, 2013	

High Level Calibration Gas	
40 CFR 60 App. F Sources	40 CFR 266 Appendix IX Sources
Pollutant analyzers - 50 - 60 % of span	CO analyzers (200 ppm span) - 140 - 160 ppm
Oxygen analyzers - 8 - 12 % O_2	CO analyzers (3,000 ppm span) - 2100 - 2400 ppm
Carbon dioxide analyzers - 10 -14 % CO_2	Oxygen analyzers - 14 - 16 % O_2

	Response
Trial No. 1:	276.56
Trial No. 2:	276.89
Trial No. 3:	277.37
Average (C_m) :	276.94
Accuracy %:	-3.03

Gas type:	Protocol	
Concentration (C_a):	285.60	ppm
Tank serial #:	CC329567	
Expiration Date:	December 15, 2013	

40 CFR 266 Allowable Limit - 0.5 % O_2 or 5% of span for CO
40 CFR 60 Allowable limit - 15 % average response value, ± 5 ppm, or ≤ 0.7% O_2 or CO_2

CYLINDER GAS AUDIT (CGA)
ASSESSMENT DATA SHEET

Company:	Valero Refining-Texas, L.P.	**Analyzer Info**	
Location:	Houston, TX	**Manufacturer:**	Thermo Scientific
Source:	Boiler No. 3	**Model No:**	48C
CEMS type:	CO	**Range (ppm):**	0 - 500 ppm
Audit Date:	May 31, 2012	**Serial No.:**	0530613424
Project No.:	12VALH173	**Personnel.:**	DL/PP/BJ

$$\text{Accuracy} = \left(\frac{\overline{C_m} - C_a}{C_a}\right) \times 100$$

Mid Level Calibration Gas	
40 CFR 60 App. F Sources	40 CFR 266 Appendix IX Sources
Pollutant analyzers - 20 - 30 % of span	CO analyzers (200 ppm span) - 60 - 80 ppm
Oxygen analyzers - 4 - 6 % O_2	CO analyzers (3,000 ppm span) - 900 - 1200 ppm
Carbon dioxide analyzers - 5 -8 % CO_2	Oxygen analyzers - 8 - 10 % O_2

	Response			
Trial No. 1:	142.40	Gas type:	Protocol	
Trial No. 2:	144.26	Concentration (C_a):	128.80	ppm
Trial No. 3:	143.59	Tank serial #:	CC346757	
Average (C_m) :	143.42	Expiration Date:	December 15, 2013	
Accuracy %:	11.35			

High Level Calibration Gas	
40 CFR 60 App. F Sources	40 CFR 266 Appendix IX Sources
Pollutant analyzers - 50 - 60 % of span	CO analyzers (200 ppm span) - 140 - 160 ppm
Oxygen analyzers - 8 - 12 % O_2	CO analyzers (3,000 ppm span) - 2100 - 2400 ppm
Carbon dioxide analyzers - 10 -14 % CO_2	Oxygen analyzers - 14 - 16 % O_2

	Response			
Trial No. 1:	273.74	Gas type:	Protocol	
Trial No. 2:	274.50	Concentration (C_a):	279.20	ppm
Trial No. 3:	273.48	Tank serial #:	CC329567	
Average (C_m) :	273.91	Expiration Date:	December 15, 2013	
Accuracy %:	-1.90			

40 CFR 266 Allowable Limit - 0.5 % O_2 or 5% of span for CO
40 CFR 60 Allowable limit - 15 % average response value, ± 5 ppm, or ≤ 0.7% O_2 or CO_2

FORM# GSC-WP004-001
REV 2010-02, EFF 8/23/11

CYLINDER GAS AUDIT (CGA)
ASSESSMENT DATA SHEET

Company: Valero
Location: Hou TX
Source: Boiler 3
CEMS type: O_2
Audit Date: 5-3-12
Project No.: 12VAH173

Analyzer Info
Manufacturer: Servomex
Model No: 1440
Range (ppm): 0-25%
Serial No.: 3654 3693 RJ 5.21.12
Personnel: BS/DA/PP

$$\text{Accuracy} = \left(\frac{\overline{C_m} - C_a}{C_a}\right) \times 100$$

Mid Level Calibration Gas	
40 CFR 60 App. F Sources	40 CFR 266 Appendix IX Sources
Pollutant analyzers - 20 - 30 % of span	CO analyzers (200 ppm span) - 60 - 80 ppm
Oxygen analyzers - 4 - 6 % O_2	CO analyzers (3,000 ppm span) - 900 - 1200 ppm
Carbon dioxide analyzers - 5 -8 % CO_2	Oxygen analyzers - 8 - 10 % O_2

Response
Trial No. 1: 4.94
Trial No. 2: 4.95
Trial No. 3: 4.95
Average (C_m): 4.95

Gas type: Protocol
Concentration (C_a): 4.96
Tank serial #: EB600-1187 ppm
Expiration Date: 12-7-14

Accuracy %: ~~-0.20~~ -0.27
RJ 6-7-12

High Level Calibration Gas	
40 CFR 60 App. F Sources	40 CFR 266 Appendix IX Sources
Pollutant analyzers - 50 - 60 % of span	CO analyzers (200 ppm span) - 140 - 160 ppm
Oxygen analyzers - 8 - 12 % O_2	CO analyzers (3,000 ppm span) - 2100 - 2400 ppm
Carbon dioxide analyzers - 10 -14 % CO_2	Oxygen analyzers - 14 - 16 % O_2

Response
Trial No. 1: 9.95
Trial No. 2: 9.96
Trial No. 3: 9.96
Average (C_m): 9.96

Gas type: Protocol
Concentration (C_a): 9.99 ppm
Tank serial #: EB0005977
Expiration Date: 12-7-14

Accuracy %: -0.37

40 CFR 266 Allowable Limit - 0.5 % O_2 or 5% of span for CO
40 CFR 60 Allowable limit - 15 % average response value or +/- 5 ppm

FORM# GSC-WP004-001
REV 2010-02, EFF 8/23/11

CYLINDER GAS AUDIT (CGA)
ASSESSMENT DATA SHEET

Company: Valero
Location: Hou TX
Source: Boiler 3
CEMS type: NOx
Audit Date: 5-31-11
Project No.: 12061173

Analyzer Info BJ 6-1-11
Manufacturer: ~~Teco~~ Thermo Scientific
Model No: 426
Range (ppm): 0-500
Serial No.: ~~0432408934~~ 0530613423 BJ 5.31.12
Personnel: BJ/PP/OL

$$\text{Accuracy} = \left(\frac{\overline{C_m} - C_a}{C_a}\right) \times 100$$

Mid Level Calibration Gas	
40 CFR 60 App. F Sources	40 CFR 266 Appendix IX Sources
Pollutant analyzers - 20 - 30 % of span	CO analyzers (200 ppm span) - 60 - 80 ppm
Oxygen analyzers - 4 - 6 % O_2	CO analyzers (3,000 ppm span) - 900 - 1200 ppm
Carbon dioxide analyzers - 5 -8 % CO_2	Oxygen analyzers - 8 - 10 % O_2

Response
Trial No. 1: 121.65
Trial No. 2: 122.38
Trial No. 3: 122.62
Average (C_m): 122.22

Accuracy %: -2.69

Gas type: Protocol
Concentration (C_a): 125.6
Tank serial #: CC346257 ppm
Expiration Date: 12-15-13

High Level Calibration Gas	
40 CFR 60 App. F Sources	40 CFR 266 Appendix IX Sources
Pollutant analyzers - 50 - 60 % of span	CO analyzers (200 ppm span) - 140 - 160 ppm
Oxygen analyzers - 8 - 12 % O_2	CO analyzers (3,000 ppm span) - 2100 - 2400 ppm
Carbon dioxide analyzers - 10 -14 % CO_2	Oxygen analyzers - 14 - 16 % O_2

Response
Trial No. 1: 276.56
Trial No. 2: 276.89
Trial No. 3: 277.37
Average (C_m): 276.94

Accuracy %: -3.03

Gas type: Protocol
Concentration (C_a): CC329567 ppm
Tank serial #: 285.6 BJ 5.31.11
Expiration Date: 12/15/13

40 CFR 266 Allowable Limit - 0.5 % O_2 or 5% of span for CO
40 CFR 60 Allowable limit - 15 % average response value or +/- 5 ppm

FORM# GSC-WP004-001
REV 2010-02, EFF 8/23/11

CYLINDER GAS AUDIT (CGA)
ASSESSMENT DATA SHEET

Company: Valero
Location: Hay TX
Source: Boiler 3
CEMS type: C°
Audit Date: 5-31-12
Project No.: 12valh173

Analyzer Info BJ 6.20.12
Manufacturer: ~~Teco~~ Thorn Scientific
Model No: 48L
Range (ppm): 0-500
Serial No.: ~~0432108975~~ 0530613424 BJ 5-31-12
Personnel: BJ/DL PP

$$\text{Accuracy} = \left(\frac{\overline{C_m} - C_a}{C_a}\right) \times 100$$

Mid Level Calibration Gas	
40 CFR 60 App. F Sources	40 CFR 266 Appendix IX Sources
Pollutant analyzers - 20 - 30 % of span	CO analyzers (200 ppm span) - 60 - 80 ppm
Oxygen analyzers - 4 - 6 % O_2	CO analyzers (3,000 ppm span) - 900 - 1200 ppm
Carbon dioxide analyzers - 5 -8 % CO_2	Oxygen analyzers - 8 - 10 % O_2

Response
Trial No. 1: 142.4
Trial No. 2: 144.26
Trial No. 3: 143.59
Average (C_m) : 143.42

Gas type: Protocol
Concentration (C_a): 128.8
Tank serial #: CL346757 ppm
Expiration Date: 12/15/13

Accuracy %: 13.28

High Level Calibration Gas	
40 CFR 60 App. F Sources	40 CFR 266 Appendix IX Sources
Pollutant analyzers - 50 - 60 % of span	CO analyzers (200 ppm span) - 140 - 160 ppm
Oxygen analyzers - 8 - 12 % O_2	CO analyzers (3,000 ppm span) - 2100 - 2400 ppm
Carbon dioxide analyzers - 10 -14 % CO_2	Oxygen analyzers - 14 - 16 % O_2

Response
Trial No. 1: 273.74
Trial No. 2: 274.50
Trial No. 3: 273.48
Average (C_m) : 273.91

Gas type: Protocol
Concentration (C_a): 279.2 ppm
Tank serial #: CL329567
Expiration Date: 12/15/13

Accuracy %: -1.89

40 CFR 266 Allowable Limit - 0.5 % O_2 or 5% of span for CO
40 CFR 60 Allowable limit - 15 % average response value or +/- 5 ppm

BOILER3 5-31-12

REALTIME DATA SAMPLES AND AVERAGES REPORT
Cirrus - Process Analysts, Inc.

Title: BOILER3CGA5-31-12
Sample Interval: 10 seconds
Average Interval: 60 seconds

Date	Time	50BF03-O2 % dry	50BF03-NOx ppm dry	50BF03-CO ppm dry		
12-05-31	07:50:50	4.93524	0.42099	4.89552	0.00000	0.00000
12-05-31	07:51:50	4.93550	0.00513	0.01246	0.00000	0.00000
12-05-31	07:52:50	4.93602	0.01027	0.00712	0.00000	0.00000
12-05-31	07:53:50	4.93472	0.01027	0.01246	0.00000	0.00000
12-05-31	07:54:50	4.93733	0.01797	0.00356	0.00000	0.00000
12-05-31	07:55:50	7.23334	0.83171	3.34554	0.00000	0.00000
12-05-31	07:56:50	9.93447	0.34911	2.48602	0.00000	0.00000
12-05-31	07:57:50	9.95093	0.02567	0.01068	0.00000	0.00000
12-05-31	07:58:50	5.20533	2.55672	0.96273	0.00000	0.00000
12-05-31	07:59:50	4.57399	5.44202	2.57856	0.00000	0.00000
12-05-31	08:00:50	4.13203	5.42662	10.00992	0.00000	0.00000
12-05-31	08:01:50	4.55649	5.93489	7.09503	0.00000	0.00000
12-05-31	08:02:50	4.66881	6.52016	3.09640	0.00000	0.00000
12-05-31	08:03:50	4.85505	7.75232	1.90589	0.00000	0.00000
12-05-31	08:04:50	4.98826	9.16416	1.56956	0.00000	0.00000
12-05-31	08:05:50	5.19645	10.97132	0.85952	0.00000	0.00000
12-05-31	08:06:50	4.49354	12.95304	2.41306	0.00000	0.00000
12-05-31	08:07:50	4.72967	13.69234	5.28524	0.00000	0.00000
12-05-31	08:08:50	5.40201	12.96331	1.88453	0.00000	0.00000
12-05-31	08:09:50	5.96492	10.80704	0.43599	0.00000	0.00000
12-05-31	08:10:50	6.50770	8.94340	0.02135	0.00000	0.00000
12-05-31	08:11:50	6.49908	7.17731	0.00534	0.00000	0.00000
12-05-31	08:12:50	6.07358	6.07864	0.00712	0.00000	0.00000
12-05-31	08:13:50	5.61438	5.50363	0.01246	0.00000	0.00000
12-05-31	08:14:50	4.82997	5.01077	0.95561	0.00000	0.00000
12-05-31	08:15:50	4.53324	4.69246	2.74939	0.00000	0.00000
12-05-31	08:16:50	4.02937	4.45116	9.15574	0.00000	0.00000
12-05-31	08:17:50	3.82615	4.46143	16.32018	0.00000	0.00000
12-05-31	08:18:50	3.97530	4.63085	19.29379	0.00000	0.00000
12-05-31	08:19:50	4.32088	5.37015	11.34992	0.00000	0.00000
12-05-31	08:20:50	4.50921	6.18132	3.92923	0.00000	0.00000
12-05-31	08:21:50	4.79680	7.58289	1.97529	0.00000	0.00000
12-05-31	08:22:50	4.90102	9.60055	1.11043	0.00000	0.00000
12-05-31	08:23:50	4.57268	12.30616	1.63362	0.00000	0.00000
12-05-31	08:24:50	4.09781	14.25707	8.10403	0.00000	0.00000
12-05-31	08:25:50	4.33002	14.75507	12.19342	0.00000	0.00000
12-05-31	08:26:50	5.23537	9.60568	3.34732	0.00000	0.00000
12-05-31	08:27:50	5.96831	7.73691	0.60326	0.00000	0.00000
12-05-31	08:28:50	6.43639	7.10030	0.10143	0.00000	0.00000
12-05-31	08:29:50	6.56229	6.20185	0.00178	0.00000	0.00000
12-05-31	08:30:50	6.32277	5.33934	0.00178	0.00000	0.00000
12-05-31	08:31:50	5.80950	4.67706	0.01424	0.00000	0.00000
12-05-31	08:32:50	5.27115	4.01478	0.68334	0.00000	0.00000
12-05-31	08:33:50	5.04495	3.42950	1.29195	0.00000	0.00000
12-05-31	08:34:50	4.68474	3.44490	1.55354	0.00000	0.00000
12-05-31	08:35:50	4.68108	3.42437	2.31162	0.00000	0.00000
12-05-31	08:36:50	4.13908	3.43464	7.00961	0.00000	0.00000
12-05-31	08:37:50	3.90217	3.42950	10.02060	0.00000	0.00000
12-05-31	08:38:50	3.69111	3.43977	19.55004	0.00000	0.00000
12-05-31	08:39:50	3.76111	3.51678	15.70089	0.00000	0.00000
12-05-31	08:40:50	3.87892	3.90696	13.65086	0.00000	0.00000

BOILER3 5-31-12

12-05-31 08:41:50	4.04348	3.93263	12.97820	0.00000	0.00000
12-05-31 08:42:50	4.20673	4.27147	9.65757	0.00000	0.00000
12-05-31 08:43:50	4.37965	4.46143	6.16077	0.00000	0.00000
12-05-31 08:44:50	4.48257	4.45630	2.92557	0.00000	0.00000
12-05-31 08:45:50	4.94020	4.46143	5.73902	0.00000	0.00000
12-05-31 08:46:50	4.94882	0.84197	1.46278	0.00000	0.00000
12-05-31 08:47:50	4.94255	0.01283	0.00356	0.00000	0.00000
12-05-31 08:48:50	5.99365	0.01797	0.00178	0.00000	0.00000
12-05-31 08:49:50	9.93839	0.00770	0.00712	0.00000	0.00000
12-05-31 08:50:50	9.95772	0.01283	0.00534	0.00000	0.00000
12-05-31 08:51:50	8.38238	0.01027	0.00000	0.00000	0.00000
12-05-31 08:52:50	4.97207	0.01540	0.00000	0.00000	0.00000
12-05-31 08:53:50	4.95431	0.01283	0.00000	0.00000	0.00000
12-05-31 08:54:50	4.98565	0.01027	0.00000	0.00000	0.00000
12-05-31 08:55:50	9.82059	0.01283	0.00000	0.00000	0.00000
12-05-31 08:56:50	9.96190	0.01283	0.00000	0.00000	0.00000
12-05-31 08:57:50	7.38301	0.01283	0.00000	0.00000	0.00000
12-05-31 08:58:50	4.96475	0.02054	0.00000	0.00000	0.00000
12-05-31 08:59:50	4.95431	0.01283	0.00000	0.00000	0.00000
12-05-31 09:00:50	9.67118	0.02054	0.00000	0.00000	0.00000
12-05-31 09:01:50	9.96164	0.01283	0.00000	0.00000	0.00000
12-05-31 09:02:50	9.96608	0.00770	0.00000	0.00000	0.00000
12-05-31 09:03:50	9.91958	0.03080	0.00000	0.00000	0.00000
12-05-31 09:04:50	0.38711	68.27172	57.54503	0.00000	0.00000
12-05-31 09:05:50	0.00057	121.64975	142.40781	0.00000	0.00000
12-05-31 09:06:50	0.00000	121.89618	143.06446	0.00000	0.00000
12-05-31 09:07:50	0.17640	121.90132	143.25132	0.00000	0.00000
12-05-31 09:08:50	0.01210	230.40807	212.79224	0.00000	0.00000
12-05-31 09:09:50	0.00000	276.56259	273.74865	0.00000	0.00000
12-05-31 09:10:50	0.00000	277.02978	278.50537	0.00000	0.00000
12-05-31 09:11:50	0.00000	277.54831	276.03359	0.00000	0.00000
12-05-31 09:12:50	0.00000	215.08312	241.89842	0.00000	0.00000
12-05-31 09:13:50	0.00000	123.18481	147.79448	0.00000	0.00000
12-05-31 09:14:50	0.00000	122.46606	144.26565	0.00000	0.00000
12-05-31 09:15:50	0.00000	122.38391	144.61800	0.00000	0.00000
12-05-31 09:16:50	0.00000	150.60028	152.90888	0.00000	0.00000
12-05-31 09:17:50	0.00000	275.57687	264.96662	0.00000	0.00000
12-05-31 09:18:50	0.00000	276.89117	274.50140	0.00000	0.00000
12-05-31 09:19:50	0.00000	277.53805	274.07966	0.00000	0.00000
12-05-31 09:20:50	0.00000	177.62044	208.52668	0.00000	0.00000
12-05-31 09:21:50	-0.00675	122.88191	144.20159	0.00000	0.00000
12-05-31 09:22:50	0.00000	122.62521	143.59833	0.00000	0.00000
12-05-31 09:23:50	0.00000	185.36249	178.88664	0.00000	0.00000
12-05-31 09:24:50	0.00000	276.37264	270.77504	0.00000	0.00000
12-05-31 09:25:50	0.00000	277.37376	273.48172	0.00000	0.00000
12-05-31 09:26:50	0.00000	277.69719	273.73798	0.00000	0.00000
12-05-31 09:27:50	2.10994	208.18305	251.98308	0.00000	0.00000
12-05-31 09:28:50	4.77773	10.78137	32.25597	0.00000	0.00000
12-05-31 09:29:50	5.45582	4.45630	1.12645	0.00000	0.00000

GOLDEN SPECIALTY

Air Quality Test Report

APPENDIX E – FCCU
Scrubber CGA Results

CYLINDER GAS AUDIT (CGA)
ASSESSMENT DATA SHEET

Company:	Valero Refining-Texas, L.P.	**Analyzer Info**	
Location:	Houston, TX	**Manufacturer:**	Servomex
Source:	FCCU Scrubber	**Model No:**	1440
CEMS type:	O_2	**Range (%):**	0 - 25 %
Audit Date:	May 30, 2012	**Serial No.:**	3739
Project No.:	12VALH173	**Personnel.:**	DL/PP

$$\text{Accuracy} = \left(\frac{\overline{C_m} - C_a}{C_a} \right) \times 100$$

Mid Level Calibration Gas	
40 CFR 60 App. F Sources	40 CFR 266 Appendix IX Sources
Pollutant analyzers - 20 - 30 % of span	CO analyzers (200 ppm span) - 60 - 80 ppm
Oxygen analyzers - 4 - 6 % O_2	CO analyzers (3,000 ppm span) - 900 - 1200 ppm
Carbon dioxide analyzers - 5 -8 % CO_2	Oxygen analyzers - 8 - 10 % O_2

	Response		
Trial No. 1:	4.99	Gas type:	Protocol
Trial No. 2:	5.01	Concentration (C_a):	4.96 %
Trial No. 3:	5.03	Tank serial #:	EB0001188
Average (C_m) :	5.01	Expiration Date:	December 7, 2013
Accuracy %:	1.01		

High Level Calibration Gas	
40 CFR 60 App. F Sources	40 CFR 266 Appendix IX Sources
Pollutant analyzers - 50 - 60 % of span	CO analyzers (200 ppm span) - 140 - 160 ppm
Oxygen analyzers - 8 - 12 % O_2	CO analyzers (3,000 ppm span) - 2100 - 2400 ppm
Carbon dioxide analyzers - 10 -14 % CO_2	Oxygen analyzers - 14 - 16 % O_2

	Response		
Trial No. 1:	10.01	Gas type:	Protocol
Trial No. 2:	10.02	Concentration (C_a):	9.99 %
Trial No. 3:	10.01	Tank serial #:	EB0005877
Average (C_m) :	10.01	Expiration Date:	December 7, 2013
Accuracy %:	0.23		

40 CFR 266 Allowable Limit - 0.5 % O_2 or 5% of span for CO

40 CFR 60 Allowable limit - 15 % average response value, ± 5 ppm, or ≤ 0.7% O_2 or CO_2

CYLINDER GAS AUDIT (CGA)
ASSESSMENT DATA SHEET

Company:	Valero Refining-Texas, L.P.	**Analyzer Info**	
Location:	Houston, TX	**Manufacturer:**	CAI
Source:	FCCU Scrubber	**Model No:**	602
CEMS type:	SO_2	**Range (ppm):**	0 - 250 ppm
Audit Date:	May 30, 2012	**Serial No.:**	U06002-M
Project No.:	12VALH173	**Personnel.:**	DL/PP

$$\text{Accuracy} = \left(\frac{\overline{C_m} - C_a}{C_a}\right) \times 100$$

Mid Level Calibration Gas	
40 CFR 60 App. F Sources	40 CFR 266 Appendix IX Sources
Pollutant analyzers - 20 - 30 % of span	CO analyzers (200 ppm span) - 60 - 80 ppm
Oxygen analyzers - 4 - 6 % O_2	CO analyzers (3,000 ppm span) - 900 - 1200 ppm
Carbon dioxide analyzers - 5 -8 % CO_2	Oxygen analyzers - 8 - 10 % O_2

	Response			
Trial No. 1:	65.10	Gas type:	Protocol	
Trial No. 2:	65.30	Concentration (C_a):	72.00	ppm
Trial No. 3:	67.40	Tank serial #:	EB0030226	
Average (C_m) :	65.93	Expiration Date:	January 4, 2014	
Accuracy %:	-8.43			

High Level Calibration Gas	
40 CFR 60 App. F Sources	40 CFR 266 Appendix IX Sources
Pollutant analyzers - 50 - 60 % of span	CO analyzers (200 ppm span) - 140 - 160 ppm
Oxygen analyzers - 8 - 12 % O_2	CO analyzers (3,000 ppm span) - 2100 - 2400 ppm
Carbon dioxide analyzers - 10 -14 % CO_2	Oxygen analyzers - 14 - 16 % O_2

	Response			
Trial No. 1:	139.60	Gas type:	Protocol	
Trial No. 2:	139.40	Concentration (C_a):	141.60	ppm
Trial No. 3:	140.40	Tank serial #:	EB0032690	
Average (C_m) :	139.80	Expiration Date:	January 4, 2014	
Accuracy %:	-1.27			

40 CFR 266 Allowable Limit - 0.5 % O_2 or 5% of span for CO
40 CFR 60 Allowable limit - 15 % average response value, ± 5 ppm, or ≤ 0.7% O_2 or CO_2

CYLINDER GAS AUDIT (CGA)
ASSESSMENT DATA SHEET

Company:	Valero Refining-Texas, L.P.	**Analyzer Info**	
Location:	Houston, TX	**Manufacturer:**	Thermo Scientific
Source:	FCCU Scrubber	**Model No:**	42C
CEMS type:	NO_x	**Range (ppm):**	0 - 500 ppm
Audit Date:	May 30, 2012	**Serial No.:**	0505310681
Project No.:	12VALH173	**Personnel.:**	DL/PP

$$\text{Accuracy} = \left(\frac{C_m - C_a}{C_a} \right) \times 100$$

Mid Level Calibration Gas	
40 CFR 60 App. F Sources	40 CFR 266 Appendix IX Sources
Pollutant analyzers - 20 - 30 % of span	CO analyzers (200 ppm span) - 60 - 80 ppm
Oxygen analyzers - 4 - 6 % O_2	CO analyzers (3,000 ppm span) - 900 - 1200 ppm
Carbon dioxide analyzers - 5 -8 % CO_2	Oxygen analyzers - 8 - 10 % O_2

	Response			
Trial No. 1:	126.10	Gas type:	Protocol	
Trial No. 2:	126.50	Concentration (C_a):	126.30	ppm
Trial No. 3:	126.50	Tank serial #:	CC117780	
Average (C_m) :	126.37	Expiration Date:	December 16, 2013	
Accuracy %:	0.05			

High Level Calibration Gas	
40 CFR 60 App. F Sources	40 CFR 266 Appendix IX Sources
Pollutant analyzers - 50 - 60 % of span	CO analyzers (200 ppm span) - 140 - 160 ppm
Oxygen analyzers - 8 - 12 % O_2	CO analyzers (3,000 ppm span) - 2100 - 2400 ppm
Carbon dioxide analyzers - 10 -14 % CO_2	Oxygen analyzers - 14 - 16 % O_2

	Response			
Trial No. 1:	284.30	Gas type:	Protocol	
Trial No. 2:	284.50	Concentration (C_a):	287.70	ppm
Trial No. 3:	284.30	Tank serial #:	CC145066	
Average (C_m) :	284.37	Expiration Date:	December 16, 2013	
Accuracy %:	-1.16			

40 CFR 266 Allowable Limit - 0.5 % O_2 or 5% of span for CO

40 CFR 60 Allowable limit - 15 % average response value, ± 5 ppm, or ≤ 0.7% O_2 or CO_2

CYLINDER GAS AUDIT (CGA)
ASSESSMENT DATA SHEET

Company:	Valero Refining-Texas, L.P.	**Analyzer Info**	
Location:	Houston, TX	**Manufacturer:**	Thermo Scientific
Source:	FCCU Scrubber	**Model No:**	48C
CEMS type:	CO	**Range (ppm):**	0 - 1000 ppm
Audit Date:	May 30, 2012	**Serial No.:**	0505310683
Project No.:	12VALH173	**Personnel.:**	DL/PP

$$\text{Accuracy} = \left(\frac{\overline{C_m} - C_a}{C_a}\right) \times 100$$

Mid Level Calibration Gas	
40 CFR 60 App. F Sources	40 CFR 266 Appendix IX Sources
Pollutant analyzers - 20 - 30 % of span	CO analyzers (200 ppm span) - 60 - 80 ppm
Oxygen analyzers - 4 - 6 % O_2	CO analyzers (3,000 ppm span) - 900 - 1200 ppm
Carbon dioxide analyzers - 5 -8 % CO_2	Oxygen analyzers - 8 - 10 % O_2

	Response			
Trial No. 1:	262.80	Gas type:	Protocol	
Trial No. 2:	262.80	Concentration (C_a):	248.90	ppm
Trial No. 3:	264.00	Tank serial #:	CC117780	
Average (C_m) :	263.20	Expiration Date:	December 16, 2013	
Accuracy %:	5.75			

High Level Calibration Gas	
40 CFR 60 App. F Sources	40 CFR 266 Appendix IX Sources
Pollutant analyzers - 50 - 60 % of span	CO analyzers (200 ppm span) - 140 - 160 ppm
Oxygen analyzers - 8 - 12 % O_2	CO analyzers (3,000 ppm span) - 2100 - 2400 ppm
Carbon dioxide analyzers - 10 -14 % CO_2	Oxygen analyzers - 14 - 16 % O_2

	Response			
Trial No. 1:	600.40	Gas type:	Protocol	
Trial No. 2:	601.70	Concentration (C_a):	599.20	ppm
Trial No. 3:	600.70	Tank serial #:	CC145066	
Average (C_m) :	600.93	Expiration Date:	December 16, 2013	
Accuracy %:	0.29			

40 CFR 266 Allowable Limit - 0.5 % O_2 or 5% of span for CO

40 CFR 60 Allowable limit - 15 % average response value, ± 5 ppm, or ≤ 0.7% O_2 or CO_2

FORM# GSC-WP004-001
REV 2010-02, EFF 8/23/11

CYLINDER GAS AUDIT (CGA)
ASSESSMENT DATA SHEET

Company: Vmeco
Location: Houston, TX
Source: FCCU
CEMS type: O_2
Audit Date: 5/30/12
Project No.: 12-0473

Analyzer Info
Manufacturer: Siemens
Model No: 1441D
Range (ppm): 25%
Serial No.: 3739
Personnel: DL AP

$$\text{Accuracy} = \left(\frac{\overline{C_m} - C_a}{C_a} \right) \times 100$$

Mid Level Calibration Gas	
40 CFR 60 App. F Sources	40 CFR 266 Appendix IX Sources
Pollutant analyzers - 20 - 30 % of span	CO analyzers (200 ppm span) - 60 - 80 ppm
Oxygen analyzers - 4 - 6 % O_2	CO analyzers (3,000 ppm span) - 900 - 1200 ppm
Carbon dioxide analyzers - 5 -8 % CO_2	Oxygen analyzers - 8 - 10 % O_2

	Response
Trial No. 1:	4.99
Trial No. 2:	5.01
Trial No. 3:	5.03
Average (C_m) :	5.010

Gas type: Protocol
Concentration (C_a): 4.96 %
Tank serial #: EB0001184 ppm
Expiration Date: 12/13

Accuracy %: 1.0 %

High Level Calibration Gas	
40 CFR 60 App. F Sources	40 CFR 266 Appendix IX Sources
Pollutant analyzers - 50 - 60 % of span	CO analyzers (200 ppm span) - 140 - 160 ppm
Oxygen analyzers - 8 - 12 % O_2	CO analyzers (3,000 ppm span) - 2100 - 2400 ppm
Carbon dioxide analyzers - 10 -14 % CO_2	Oxygen analyzers - 14 - 16 % O_2

	Response
Trial No. 1:	10.01
Trial No. 2:	10.02
Trial No. 3:	10.01
Average (C_m) :	10.013

Gas type: Protocol
Concentration (C_a): 9996 ppm
Tank serial #: EB0005877
Expiration Date: 12/13

Accuracy %: 0.23 %

40 CFR 266 Allowable Limit - 0.5 % O_2 or 5% of span for CO
40 CFR 60 Allowable limit - 15 % average response value or +/- 5 ppm

FORM# GSC-WP004-001
REV 2010-02, EFF 8/23/11

CYLINDER GAS AUDIT (CGA)
ASSESSMENT DATA SHEET

Company: Valero
Location: Houston
Source: FCCU
CEMS type: SO_2
Audit Date: 5-30-12
Project No.: 12VAL073

Analyzer Info
Manufacturer: CAI
Model No: 600
Range (ppm): 250
Serial No.: 0606002-M
Personnel: DL PI

$$\text{Accuracy} = \left(\frac{\overline{C_m} - C_a}{C_a} \right) \times 100$$

Mid Level Calibration Gas	
40 CFR 60 App. F Sources	40 CFR 266 Appendix IX Sources
Pollutant analyzers - 20 - 30 % of span	CO analyzers (200 ppm span) - 60 - 80 ppm
Oxygen analyzers - 4 - 6 % O_2	CO analyzers (3,000 ppm span) - 900 - 1200 ppm
Carbon dioxide analyzers - 5 -8 % CO_2	Oxygen analyzers - 8 - 10 % O_2

Response
Trial No. 1: 65.1
Trial No. 2: 65.3
Trial No. 3: 67.4
Average (C_m): 65.93

Gas type: Protocol
Concentration (C_a): 77.0 ppm
Tank serial #: EB0032226
Expiration Date: 1/14

Accuracy %: -8.4

High Level Calibration Gas	
40 CFR 60 App. F Sources	40 CFR 266 Appendix IX Sources
Pollutant analyzers - 50 - 60 % of span	CO analyzers (200 ppm span) - 140 - 160 ppm
Oxygen analyzers - 8 - 12 % O_2	CO analyzers (3,000 ppm span) - 2100 - 2400 ppm
Carbon dioxide analyzers - 10 -14 % CO_2	Oxygen analyzers - 14 - 16 % O_2

Response
Trial No. 1: 139.6
Trial No. 2: 139.4
Trial No. 3: 140.4
Average (C_m): 139.8

Gas type: Protocol
Concentration (C_a): 141.6 ppm
Tank serial #: EB0032690
Expiration Date: 1/14

Accuracy %: -1.27

40 CFR 266 Allowable Limit - 0.5 % O_2 or 5% of span for CO
40 CFR 60 Allowable limit - 15 % average response value or +/- 5 ppm

FORM# GSC-WP004-001
REV 2010-02, EFF 8/23/11

CYLINDER GAS AUDIT (CGA)
ASSESSMENT DATA SHEET

Company: Ineos
Location: Houston, TX
Source: FCC4
CEMS type: NOx
Audit Date: 5/30/12
Project No.: 12691h173

Analyzer Info
Manufacturer: Teledyne
Model No: 42C
Range (ppm): 500
Serial No.: 0505310681
Personnel: DL PP

$$\text{Accuracy} = \left(\frac{C_m - C_a}{C_a}\right) \times 100$$

Mid Level Calibration Gas	
40 CFR 60 App. F Sources	40 CFR 266 Appendix IX Sources
Pollutant analyzers - 20 - 30 % of span	CO analyzers (200 ppm span) - 60 - 80 ppm
Oxygen analyzers - 4 - 6 % O_2	CO analyzers (3,000 ppm span) - 900 - 1200 ppm
Carbon dioxide analyzers - 5 -8 % CO_2	Oxygen analyzers - 8 - 10 % O_2

Response
Trial No. 1: 120.1
Trial No. 2: 120.5
Trial No. 3: 120.3
Average (C_m): 120.37

Gas type: Protocol
Concentration (C_a): 126.3
Tank serial #: CC177180 ppm
Expiration Date: 12/13

Accuracy %: -0.53

High Level Calibration Gas	
40 CFR 60 App. F Sources	40 CFR 266 Appendix IX Sources
Pollutant analyzers - 50 - 60 % of span	CO analyzers (200 ppm span) - 140 - 160 ppm
Oxygen analyzers - 8 - 12 % O_2	CO analyzers (3,000 ppm span) - 2100 - 2400 ppm
Carbon dioxide analyzers - 10 -14 % CO_2	Oxygen analyzers - 14 - 16 % O_2

Response
Trial No. 1: 284.3
Trial No. 2: 284.5
Trial No. 3: 284.3
Average (C_m): 284.37

Gas type: Protocol
Concentration (C_a): 287.7 ppm
Tank serial #: CC145066
Expiration Date: 12/13

Accuracy %: -1.1

40 CFR 266 Allowable Limit - 0.5 % O_2 or 5% of span for CO
40 CFR 60 Allowable limit - 15 % average response value or +/- 5 ppm

FORM# GSC-WP004-001
REV 2010-02, EFF 8/23/11

CYLINDER GAS AUDIT (CGA)
ASSESSMENT DATA SHEET

Company: Valero
Location: Houston, TX
Source: FCCU
CEMS type: CO
Audit Date: 5/30/12
Project No.: 12VSH173

Analyzer Info
Manufacturer: Thermo
Model No: 48C
Range (ppm): 1000
Serial No.: 0505316483
Personnel: DL PP

$$\text{Accuracy} = \left(\frac{\overline{C_m} - C_a}{C_a}\right) \times 100$$

Mid Level Calibration Gas	
40 CFR 60 App. F Sources	40 CFR 266 Appendix IX Sources
Pollutant analyzers - 20 - 30 % of span	CO analyzers (200 ppm span) - 60 - 80 ppm
Oxygen analyzers - 4 - 6 % O_2	CO analyzers (3,000 ppm span) - 900 - 1200 ppm
Carbon dioxide analyzers - 5 -8 % CO_2	Oxygen analyzers - 8 - 10 % O_2

Response
Trial No. 1: 262.8
Trial No. 2: 262.8
Trial No. 3: 264.0
Average (C_m): 263.20

Gas type: Protocol
Concentration (C_a): 248.9 ppm
Tank serial #: CC117820
Expiration Date: 12/13

Accuracy %: 5.7%

High Level Calibration Gas	
40 CFR 60 App. F Sources	40 CFR 266 Appendix IX Sources
Pollutant analyzers - 50 - 60 % of span	CO analyzers (200 ppm span) - 140 - 160 ppm
Oxygen analyzers - 8 - 12 % O_2	CO analyzers (3,000 ppm span) - 2100 - 2400 ppm
Carbon dioxide analyzers - 10 -14 % CO_2	Oxygen analyzers - 14 - 16 % O_2

Response
Trial No. 1: 600.4
Trial No. 2: 601.7
Trial No. 3: 600.7
Average (C_m): 600.93

Gas type: Protocol
Concentration (C_a): 599.2 ppm
Tank serial #: CC145066
Expiration Date: 12/13

Accuracy %: ~~2.9%~~ 0.29%
BJ 6.20.12

40 CFR 266 Allowable Limit - 0.5 % O_2 or 5% of span for CO
40 CFR 60 Allowable limit - 15 % average response value or +/- 5 ppm

FCCU 05-30-12

REALTIME DATA SAMPLES AND AVERAGES REPORT
Cirrus - Process Analysts, Inc.

Title: FCCU 5-30-121
Sample Interval: 60 seconds
Average Interval: 60 seconds

Date	Time	FCCU-O2 % dry	FCCU-SO2 ppm dry	FCCU-NOx ppm dry	FCCU-CO ppm dry	
12-05-30	11:07:20	1.53388	0.00000	23.96216	19.53604	0.00000
12-05-30	11:08:20	1.44231	0.00000	6.86813	22.28329	0.00000
12-05-30	11:09:20	1.50336	0.07632	9.00488	20.45178	0.00000
12-05-30	11:10:20	1.56441	0.00000	14.80464	20.45178	0.00000
12-05-30	11:11:20	3.93773	0.99207	2.89988	27.16730	0.00000
12-05-30	11:12:20	0.00763	0.00000	423.68744	772.28333	0.00000
12-05-30	11:13:20	0.00763	0.00000	428.26617	808.30286	0.00000
12-05-30	11:14:20	0.01526	0.00000	416.36145	800.36633	0.00000
12-05-30	11:15:20	0.00000	0.00000	416.36145	798.22961	0.00000
12-05-30	11:16:20	1.43468	0.00000	28.38829	313.18683	0.00000
12-05-30	11:17:20	1.18285	0.00000	7.93651	28.38828	0.00000
12-05-30	11:18:20	0.96917	0.00000	1.83150	28.38828	0.00000
12-05-30	11:19:20	1.14469	0.00000	0.91576	30.52505	0.00000
12-05-30	11:20:20	-0.01526	0.00000	141.02567	305.25031	0.00000
12-05-30	11:21:20	-0.01526	0.00000	125.45789	261.90479	0.00000
12-05-30	11:22:20	-0.01526	0.00000	126.06839	262.82056	0.00000
12-05-30	11:23:20	-0.01526	0.00000	126.06839	262.82056	0.00000
12-05-30	11:24:20	0.00000	12.82052	125.00002	260.98904	0.00000
12-05-30	11:25:20	-0.01526	0.00000	280.37241	593.71185	0.00000
12-05-30	11:26:20	-0.00763	0.00000	284.95117	599.51166	0.00000
12-05-30	11:27:20	0.00000	0.00000	284.34067	600.42737	0.00000
12-05-30	11:28:20	-0.00763	0.00000	284.95117	596.45911	0.00000
12-05-30	11:29:20	-0.01526	0.00000	128.05251	268.00977	0.00000
12-05-30	11:30:20	-0.01526	0.00000	126.52626	262.82056	0.00000
12-05-30	11:31:20	-0.01526	0.00000	126.52626	262.82056	0.00000
12-05-30	11:32:20	-0.00763	0.00000	200.09158	338.21735	0.00000
12-05-30	11:33:20	-0.00763	0.00000	284.34067	598.59589	0.00000
12-05-30	11:34:20	0.00000	0.00000	284.49329	600.73260	0.00000
12-05-30	11:35:20	0.00000	0.00000	284.49329	601.64838	0.00000
12-05-30	11:36:20	-0.01526	0.00000	134.00488	396.52014	0.00000
12-05-30	11:37:20	-0.00763	0.00000	126.98413	264.04150	0.00000
12-05-30	11:38:20	-0.00763	0.00000	126.98413	263.12579	0.00000
12-05-30	11:39:20	-0.01526	0.00000	126.52626	264.04150	0.00000
12-05-30	11:40:20	-0.00763	0.00000	282.96704	594.62762	0.00000
12-05-30	11:41:20	-0.00763	0.00000	284.34067	600.73260	0.00000
12-05-30	11:42:20	-0.00763	0.00000	284.95117	600.73260	0.00000
12-05-30	11:43:20	6.69261	0.00000	284.95117	566.54462	0.00000
12-05-30	11:44:20	4.96795	0.00000	11.90477	27.47253	0.00000
12-05-30	11:45:20	4.99084	0.00000	2.44201	2.44202	0.00000
12-05-30	11:46:20	4.99084	0.00000	1.37363	1.52626	0.00000
12-05-30	11:47:20	3.09066	0.00000	1.37363	1.52626	0.00000
12-05-30	11:48:20	1.28205	0.00000	0.91576	30.21979	0.00000
12-05-30	11:49:20	3.59432	0.00000	16.94139	21.36752	0.00000
12-05-30	11:50:20	10.00458	0.00000	1.83150	12.51526	0.00000
12-05-30	11:51:20	10.01984	0.00000	0.91576	1.52626	0.00000
12-05-30	11:52:20	10.01984	0.00000	0.91576	1.52626	0.00000
12-05-30	11:53:20	5.11294	0.00000	0.91576	1.52626	0.00000
12-05-30	11:54:20	5.02900	0.00000	0.45788	0.30527	0.00000
12-05-30	11:55:20	5.01374	0.00000	0.45788	0.30527	0.00000
12-05-30	11:56:20	8.40201	0.00000	0.45788	0.30527	0.00000
12-05-30	11:57:20	10.02747	0.00000	0.45788	0.30527	0.00000

FCCU 05-30-12

12-05-30 11:58:20	10.02747	0.00000	0.45788	0.30527	0.00000
12-05-30 11:59:20	10.02747	0.00000	0.45788	0.30527	0.00000
12-05-30 12:00:20	5.09005	0.00000	0.30525	0.30527	0.00000
12-05-30 12:01:20	5.02900	0.00000	0.45788	0.30527	0.00000
12-05-30 12:02:20	5.02900	0.00000	0.45788	0.30527	0.00000
12-05-30 12:03:20	5.01374	0.00000	0.45788	0.30527	0.00000
12-05-30 12:04:20	10.01221	0.00000	0.45788	0.30527	0.00000
12-05-30 12:05:20	10.03510	0.00000	0.45788	0.30527	0.00000
12-05-30 12:06:20	10.03510	0.00000	0.45788	0.30527	0.00000
12-05-30 12:07:20	0.06105	61.50794	1.83150	19.53604	0.00000
12-05-30 12:08:20	0.02289	63.87363	0.91576	0.30527	0.00000
12-05-30 12:09:20	0.01526	65.24726	0.45788	0.30527	0.00000
12-05-30 12:10:20	-0.00763	63.11050	0.45788	0.30527	0.00000
12-05-30 12:11:20	-0.00763	65.09464	0.45788	0.30527	0.00000
12-05-30 12:12:20	0.43498	72.72589	0.45788	1.52626	0.00000
12-05-30 12:13:20	0.00000	136.82846	0.45788	0.30527	0.00000
12-05-30 12:14:20	-0.00763	138.27840	0.45788	0.30527	0.00000
12-05-30 12:15:20	-0.01526	139.19415	0.45788	0.30527	0.00000
12-05-30 12:16:20	-0.00763	139.65202	0.30525	0.30527	0.00000
12-05-30 12:17:20	-0.01526	73.03114	0.45788	0.30527	0.00000
12-05-30 12:18:20	-0.02289	67.00244	0.45788	0.30527	0.00000
12-05-30 12:19:20	-0.02289	66.01038	0.45788	0.30527	0.00000
12-05-30 12:20:20	-0.01526	65.32357	0.45788	0.30527	0.00000
12-05-30 12:21:20	-0.01526	106.30342	0.45788	0.30527	0.00000
12-05-30 12:22:20	-0.02289	139.95728	0.45788	0.30527	0.00000
12-05-30 12:23:20	-0.03053	139.42308	0.45788	0.30527	0.00000
12-05-30 12:24:20	-0.01526	140.18620	0.45788	0.30527	0.00000
12-05-30 12:25:20	-0.02289	92.41454	0.45788	0.30527	0.00000
12-05-30 12:26:20	-0.03053	67.91820	0.45788	0.30527	0.00000
12-05-30 12:27:20	-0.02289	67.46033	0.45788	0.30527	0.00000
12-05-30 12:28:20	-0.03053	66.39195	0.45788	0.30527	0.00000
12-05-30 12:29:20	-0.02289	103.02199	0.45788	0.30527	0.00000
12-05-30 12:30:20	-0.03053	139.11783	0.45788	0.30527	0.00000
12-05-30 12:31:20	-0.02289	140.41515	0.45788	0.30527	0.00000

GOLDEN SPECIALTY

Air Quality Test Report

APPENDIX F – Fuel Gas Drum CGA Results

CYLINDER GAS AUDIT (CGA)
ASSESSMENT DATA SHEET

Company:	Valero Refining-Texas, L.P.	**Analyzer Info**	
Location:	Houston, TX	**Manufacturer:**	Siemens
Source:	Fuel Gas Drum	**Model No:**	Maxum
CEMS type:	H_2S	**Range (ppm):**	0 - 300 ppm
Audit Date:	May 30, 2012	**Serial No.:**	5083970001
Project No.:	12VALH173	**Personnel.:**	DL/PP

$$\text{Accuracy} = \left(\frac{\overline{C_m} - C_a}{C_a}\right) \times 100$$

Mid Level Calibration Gas	
40 CFR 60 App. F Sources	40 CFR 266 Appendix IX Sources
Pollutant analyzers - 20 - 30 % of span	CO analyzers (200 ppm span) - 60 - 80 ppm
Oxygen analyzers - 4 - 6 % O_2	CO analyzers (3,000 ppm span) - 900 - 1200 ppm
Carbon dioxide analyzers - 5 -8 % CO_2	Oxygen analyzers - 8 - 10 % O_2

	Response			
Trial No. 1:	73.40	Gas type:	Protocol	
Trial No. 2:	74.80	Concentration (C_a):	67.28	ppm
Trial No. 3:	74.60	Tank serial #:	EB0032620	
Average (C_m) :	74.27	Expiration Date:	December 14, 2013	
Accuracy %:	10.38			

High Level Calibration Gas	
40 CFR 60 App. F Sources	40 CFR 266 Appendix IX Sources
Pollutant analyzers - 50 - 60 % of span	CO analyzers (200 ppm span) - 140 - 160 ppm
Oxygen analyzers - 8 - 12 % O_2	CO analyzers (3,000 ppm span) - 2100 - 2400 ppm
Carbon dioxide analyzers - 10 -14 % CO_2	Oxygen analyzers - 14 - 16 % O_2

	Response			
Trial No. 1:	184.50	Gas type:	Protocol	
Trial No. 2:	184.40	Concentration (C_a):	176.30	ppm
Trial No. 3:	185.50	Tank serial #:	EB0032631	
Average (C_m) :	184.80	Expiration Date:	December 14, 2013	
Accuracy %:	4.82			

40 CFR 266 Allowable Limit - 0.5 % O_2 or 5% of span for CO
40 CFR 60 Allowable limit - 15 % average response value, ± 5 ppm, or ≤ 0.7% O_2 or CO_2

FORM# GSC-WP004-001
REV 2010-02, EFF 8/23/11

CYLINDER GAS AUDIT (CGA)
ASSESSMENT DATA SHEET

Company: Vmetro
Location: Houston TX
Source: Fuel Gas
CEMS type: H_2S
Audit Date: 5/29/12
Project No.: 12UA0173

Analyzer Info
Manufacturer: Siemens
Model No: Maxum
Range (ppm): 300
Serial No.: 508397000
Personnel: BLR

$$\text{Accuracy} = \left(\frac{\overline{C_m} - C_a}{C_a}\right) \times 100$$

Mid Level Calibration Gas	
40 CFR 60 App. F Sources	40 CFR 266 Appendix IX Sources
Pollutant analyzers - 20 - 30 % of span	CO analyzers (200 ppm span) - 60 - 80 ppm
Oxygen analyzers - 4 - 6 % O_2	CO analyzers (3,000 ppm span) - 900 - 1200 ppm
Carbon dioxide analyzers - 5 -8 % CO_2	Oxygen analyzers - 8 - 10 % O_2

	Response
Trial No. 1:	73.4
Trial No. 2:	74.8
Trial No. 3:	74.6
Average (C_m) :	74.27

Gas type: Protocol
Concentration (C_a): 67.28
Tank serial #: EB0032620 ppm
Expiration Date: 12/13

Accuracy %: 12.4 %

High Level Calibration Gas	
40 CFR 60 App. F Sources	40 CFR 266 Appendix IX Sources
Pollutant analyzers - 50 - 60 % of span	CO analyzers (200 ppm span) - 140 - 160 ppm
Oxygen analyzers - 8 - 12 % O_2	CO analyzers (3,000 ppm span) - 2100 - 2400 ppm
Carbon dioxide analyzers - 10 -14 % CO_2	Oxygen analyzers - 14 - 16 % O_2

	Response
Trial No. 1:	184.5
Trial No. 2:	184.4
Trial No. 3:	185.5
Average (C_m) :	184.80

Gas type: Protocol
Concentration (C_a): 176.3 ppm
Tank serial #: EB0032631
Expiration Date: 12/13

Accuracy %: 4.8 %

40 CFR 266 Allowable Limit - 0.5 % O_2 or 5% of span for CO
40 CFR 60 Allowable limit - 15 % average response value or +/- 5 ppm

Fuel Gas 05-30-12

REALTIME DATA SAMPLES AND AVERAGES REPORT
Cirrus - Process Analysts, Inc.

Title: Fuel Gas 05-30-12
Sample Interval: 10 seconds
Average Interval: 60 seconds

Date	Time	Fuel Gas-H2S ppm				
12-05-30	06:21:50	6.76422	0.00000	0.00000	0.00000	0.00000
12-05-30	06:22:50	6.60019	0.00000	0.00000	0.00000	0.00000
12-05-30	06:23:50	6.58875	0.00000	0.00000	0.00000	0.00000
12-05-30	06:24:50	6.74896	0.00000	0.00000	0.00000	0.00000
12-05-30	06:25:50	6.74896	0.00000	0.00000	0.00000	0.00000
12-05-30	06:26:50	1.29776	0.00000	0.00000	0.00000	0.00000
12-05-30	06:27:50	1.28632	0.00000	0.00000	0.00000	0.00000
12-05-30	06:28:50	6.49719	0.00000	0.00000	0.00000	0.00000
12-05-30	06:29:50	6.50482	0.00000	0.00000	0.00000	0.00000
12-05-30	06:30:50	6.49338	0.00000	0.00000	0.00000	0.00000
12-05-30	06:31:50	6.48956	0.00000	0.00000	0.00000	0.00000
12-05-30	06:32:50	6.83289	0.00000	0.00000	0.00000	0.00000
12-05-30	06:33:50	6.92062	0.00000	0.00000	0.00000	0.00000
12-05-30	06:34:50	6.91299	0.00000	0.00000	0.00000	0.00000
12-05-30	06:35:50	6.91681	0.00000	0.00000	0.00000	0.00000
12-05-30	06:36:50	6.82907	0.00000	0.00000	0.00000	0.00000
12-05-30	06:37:50	6.81381	0.00000	0.00000	0.00000	0.00000
12-05-30	06:38:50	6.82907	0.00000	0.00000	0.00000	0.00000
12-05-30	06:39:50	6.81000	0.00000	0.00000	0.00000	0.00000
12-05-30	06:40:50	2.76642	0.00000	0.00000	0.00000	0.00000
12-05-30	06:41:50	0.73700	0.00000	0.00000	0.00000	0.00000
12-05-30	06:42:50	5.14679	0.00000	0.00000	0.00000	0.00000
12-05-30	06:43:50	7.34787	0.00000	0.00000	0.00000	0.00000
12-05-30	06:44:50	7.14188	0.00000	0.00000	0.00000	0.00000
12-05-30	06:45:50	7.01599	0.00000	0.00000	0.00000	0.00000
12-05-30	06:46:50	6.98547	0.00000	0.00000	0.00000	0.00000
12-05-30	06:47:50	6.93207	0.00000	0.00000	0.00000	0.00000
12-05-30	06:48:50	6.64597	0.00000	0.00000	0.00000	0.00000
12-05-30	06:49:50	6.51245	0.00000	0.00000	0.00000	0.00000
12-05-30	06:50:50	6.42090	0.00000	0.00000	0.00000	0.00000
12-05-30	06:51:50	6.39801	0.00000	0.00000	0.00000	0.00000
12-05-30	06:52:50	2.73590	0.00000	0.00000	0.00000	0.00000
12-05-30	06:53:50	0.90103	0.00000	0.00000	0.00000	0.00000
12-05-30	06:54:50	3.82309	0.00000	0.00000	0.00000	0.00000
12-05-30	06:55:50	6.37894	0.00000	0.00000	0.00000	0.00000
12-05-30	06:56:50	6.27975	0.00000	0.00000	0.00000	0.00000
12-05-30	06:57:50	6.14624	0.00000	0.00000	0.00000	0.00000
12-05-30	06:58:50	6.42853	0.00000	0.00000	0.00000	0.00000
12-05-30	06:59:50	6.70700	0.00000	0.00000	0.00000	0.00000
12-05-30	07:00:50	6.56204	0.00000	0.00000	0.00000	0.00000
12-05-30	07:01:50	6.41708	0.00000	0.00000	0.00000	0.00000
12-05-30	07:02:50	6.52008	0.00000	0.00000	0.00000	0.00000
12-05-30	07:03:50	6.71082	0.00000	0.00000	0.00000	0.00000
12-05-30	07:04:50	6.63071	0.00000	0.00000	0.00000	0.00000
12-05-30	07:05:50	6.41327	0.00000	0.00000	0.00000	0.00000
12-05-30	07:06:50	6.35986	0.00000	0.00000	0.00000	0.00000
12-05-30	07:07:50	6.27594	0.00000	0.00000	0.00000	0.00000
12-05-30	07:08:50	12.08191	0.00000	0.00000	0.00000	0.00000
12-05-30	07:09:50	23.71674	0.00000	0.00000	0.00000	0.00000
12-05-30	07:10:50	39.61639	0.00000	0.00000	0.00000	0.00000
12-05-30	07:11:50	71.41190	0.00000	0.00000	0.00000	0.00000

Fuel Gas 05-30-12

12-05-30 07:12:50	72.03369	0.00000	0.00000	0.00000	0.00000
12-05-30 07:13:50	73.26965	0.00000	0.00000	0.00000	0.00000
12-05-30 07:14:50	73.44513	0.00000	0.00000	0.00000	0.00000
12-05-30 07:15:50	73.78845	0.00000	0.00000	0.00000	0.00000
12-05-30 07:16:50	110.31799	0.00000	0.00000	0.00000	0.00000
12-05-30 07:17:50	183.35419	0.00000	0.00000	0.00000	0.00000
12-05-30 07:18:50	183.45337	0.00000	0.00000	0.00000	0.00000
12-05-30 07:19:50	183.97980	0.00000	0.00000	0.00000	0.00000
12-05-30 07:20:50	184.05991	0.00000	0.00000	0.00000	0.00000
12-05-30 07:21:50	184.46426	0.00000	0.00000	0.00000	0.00000
12-05-30 07:22:50	166.16135	0.00000	0.00000	0.00000	0.00000
12-05-30 07:23:50	74.59717	0.00000	0.00000	0.00000	0.00000
12-05-30 07:24:50	74.62387	0.00000	0.00000	0.00000	0.00000
12-05-30 07:25:50	74.75739	0.00000	0.00000	0.00000	0.00000
12-05-30 07:26:50	74.75739	0.00000	0.00000	0.00000	0.00000
12-05-30 07:27:50	74.98245	0.00000	0.00000	0.00000	0.00000
12-05-30 07:28:50	74.98245	0.00000	0.00000	0.00000	0.00000
12-05-30 07:29:50	184.31549	0.00000	0.00000	0.00000	0.00000
12-05-30 07:30:50	184.32312	0.00000	0.00000	0.00000	0.00000
12-05-30 07:31:50	184.39178	0.00000	0.00000	0.00000	0.00000
12-05-30 07:32:50	184.39178	0.00000	0.00000	0.00000	0.00000
12-05-30 07:33:50	75.26093	0.00000	0.00000	0.00000	0.00000
12-05-30 07:34:50	75.25330	0.00000	0.00000	0.00000	0.00000
12-05-30 07:35:50	74.64294	0.00000	0.00000	0.00000	0.00000
12-05-30 07:36:50	74.64294	0.00000	0.00000	0.00000	0.00000
12-05-30 07:37:50	75.00916	0.00000	0.00000	0.00000	0.00000
12-05-30 07:38:50	75.00916	0.00000	0.00000	0.00000	0.00000
12-05-30 07:39:50	166.45126	0.00000	0.00000	0.00000	0.00000
12-05-30 07:40:50	184.73511	0.00000	0.00000	0.00000	0.00000
12-05-30 07:41:50	185.55145	0.00000	0.00000	0.00000	0.00000
12-05-30 07:42:50	185.71930	0.00000	0.00000	0.00000	0.00000
Average	52.09487	0.00000	0.00000	0.00000	0.00000

GOLDEN SPECIALTY

Air Quality Test Report

APPENDIX G – Crude Atmospheric Heater North Stack CGA Results

CYLINDER GAS AUDIT (CGA)
ASSESSMENT DATA SHEET

Company:	Valero Refining-Texas, L.P.	**Analyzer Info**	
Location:	Houston, TX	**Manufacturer:**	Servomex
Source:	Crude Atmospheric Heater North Stack	**Model No:**	1440
CEMS type:	O_2	**Range (%):**	0 - 25 %
Audit Date:	May 29, 2012	**Serial No.:**	1056
Project No.:	12VALH173	**Personnel.:**	DL/PP

$$\text{Accuracy} = \left(\frac{\overline{C_m} - C_a}{C_a} \right) \times 100$$

Mid Level Calibration Gas	
40 CFR 60 App. F Sources	40 CFR 266 Appendix IX Sources
Pollutant analyzers - 20 - 30 % of span	CO analyzers (200 ppm span) - 60 - 80 ppm
Oxygen analyzers - 4 - 6 % O_2	CO analyzers (3,000 ppm span) - 900 - 1200 ppm
Carbon dioxide analyzers - 5 -8 % CO_2	Oxygen analyzers - 8 - 10 % O_2

	Response			
Trial No. 1:	4.91	Gas type:	Protocol	
Trial No. 2:	4.93	Concentration (C_a):	4.96	%
Trial No. 3:	4.93	Tank serial #:	EB0001188	
Average (C_m) :	4.92	Expiration Date:	December 7, 2013	
Accuracy %:	-0.74			

High Level Calibration Gas	
40 CFR 60 App. F Sources	40 CFR 266 Appendix IX Sources
Pollutant analyzers - 50 - 60 % of span	CO analyzers (200 ppm span) - 140 - 160 ppm
Oxygen analyzers - 8 - 12 % O_2	CO analyzers (3,000 ppm span) - 2100 - 2400 ppm
Carbon dioxide analyzers - 10 -14 % CO_2	Oxygen analyzers - 14 - 16 % O_2

	Response			
Trial No. 1:	9.95	Gas type:	Protocol	
Trial No. 2:	9.95	Concentration (C_a):	9.99	%
Trial No. 3:	9.96	Tank serial #:	EB0005877	
Average (C_m) :	9.95	Expiration Date:	December 7, 2013	
Accuracy %:	-0.37			

40 CFR 266 Allowable Limit - 0.5 % O_2 or 5% of span for CO
40 CFR 60 Allowable limit - 15 % average response value, ± 5 ppm, or ≤ 0.7% O_2 or CO_2

CYLINDER GAS AUDIT (CGA)
ASSESSMENT DATA SHEET

Company:	Valero Refining-Texas, L.P.	**Analyzer Info**	
Location:	Houston, TX	**Manufacturer:**	Thermo Scientific
Source:	Crude Atmospheric Heater North Stack	**Model No:**	42C
CEMS type:	NO_x	**Range (ppm):**	0 - 200 ppm
Audit Date:	May 29, 2012	**Serial No.:**	42CHL - 63970 - 342
Project No.:	12VALH173	**Personnel.:**	DL/PP

$$\text{Accuracy} = \left(\frac{C_m - C_a}{C_a}\right) \times 100$$

Mid Level Calibration Gas	
40 CFR 60 App. F Sources	40 CFR 266 Appendix IX Sources
Pollutant analyzers - 20 - 30 % of span	CO analyzers (200 ppm span) - 60 - 80 ppm
Oxygen analyzers - 4 - 6 % O_2	CO analyzers (3,000 ppm span) - 900 - 1200 ppm
Carbon dioxide analyzers - 5 -8 % CO_2	Oxygen analyzers - 8 - 10 % O_2

	Response			
Trial No. 1:	47.60	Gas type:	Protocol	
Trial No. 2:	47.40	Concentration (C_a):	50.10	ppm
Trial No. 3:	48.30	Tank serial #:	EB0006533	
Average (C_m) :	47.77	Expiration Date:	December 16, 2013	
Accuracy %:	-4.66			

High Level Calibration Gas	
40 CFR 60 App. F Sources	40 CFR 266 Appendix IX Sources
Pollutant analyzers - 50 - 60 % of span	CO analyzers (200 ppm span) - 140 - 160 ppm
Oxygen analyzers - 8 - 12 % O_2	CO analyzers (3,000 ppm span) - 2100 - 2400 ppm
Carbon dioxide analyzers - 10 -14 % CO_2	Oxygen analyzers - 14 - 16 % O_2

	Response			
Trial No. 1:	103.90	Gas type:	Protocol	
Trial No. 2:	104.90	Concentration (C_a):	109.30	ppm
Trial No. 3:	105.00	Tank serial #:	EB0003623	
Average (C_m) :	104.60	Expiration Date:	December 16, 2013	
Accuracy %:	-4.30			

40 CFR 266 Allowable Limit - 0.5 % O_2 or 5% of span for CO
40 CFR 60 Allowable limit - 15 % average response value, ± 5 ppm, or ≤ 0.7% O_2 or CO_2

CYLINDER GAS AUDIT (CGA)
ASSESSMENT DATA SHEET

Company:	Valero Refining-Texas, L.P.	**Analyzer Info**	
Location:	Houston, TX	**Manufacturer:**	Thermo Scientific
Source:	Crude Atmospheric Heater North Stack	**Model No:**	48C
CEMS type:	CO	**Range (ppm):**	0 - 500 ppm
Audit Date:	May 29, 2012	**Serial No.:**	48C - 64042 - 342
Project No.:	12VALH173	**Personnel.:**	DL/PP

$$\text{Accuracy} = \left(\frac{\overline{C_m} - C_a}{C_a}\right) \times 100$$

Mid Level Calibration Gas	
40 CFR 60 App. F Sources	40 CFR 266 Appendix IX Sources
Pollutant analyzers - 20 - 30 % of span	CO analyzers (200 ppm span) - 60 - 80 ppm
Oxygen analyzers - 4 - 6 % O_2	CO analyzers (3,000 ppm span) - 900 - 1200 ppm
Carbon dioxide analyzers - 5 -8 % CO_2	Oxygen analyzers - 8 - 10 % O_2

	Response			
Trial No. 1:	122.60	Gas type:	Protocol	
Trial No. 2:	123.20	Concentration (C_a):	127.20	ppm
Trial No. 3:	123.20	Tank serial #:	EB0006533	
Average (C_m) :	123.00	Expiration Date:	December 16, 2013	
Accuracy %:	-3.30			

High Level Calibration Gas	
40 CFR 60 App. F Sources	40 CFR 266 Appendix IX Sources
Pollutant analyzers - 50 - 60 % of span	CO analyzers (200 ppm span) - 140 - 160 ppm
Oxygen analyzers - 8 - 12 % O_2	CO analyzers (3,000 ppm span) - 2100 - 2400 ppm
Carbon dioxide analyzers - 10 -14 % CO_2	Oxygen analyzers - 14 - 16 % O_2

	Response			
Trial No. 1:	266.50	Gas type:	Protocol	
Trial No. 2:	267.60	Concentration (C_a):	277.70	ppm
Trial No. 3:	265.50	Tank serial #:	EB0003623	
Average (C_m) :	266.50	Expiration Date:	December 16, 2013	
Accuracy %:	-4.03			

40 CFR 266 Allowable Limit - 0.5 % O_2 or 5% of span for CO
40 CFR 60 Allowable limit - 15 % average response value, ± 5 ppm, or ≤ 0.7% O_2 or CO_2

FORM# GSC-WP004-001
REV 2010-02, EFF 8/23/11

CYLINDER GAS AUDIT (CGA)
ASSESSMENT DATA SHEET

Company: Veolia
Location: Houston, TX
Source: Ammonia Inj - NOx/Hg
CEMS type: DS
Audit Date: 5/29/12
Project No.: 12 VEO 117

Analyzer Info
Manufacturer: Teledyne
Model No: 9440
Range (ppm): 25
Serial No.: 1056
Personnel: DL PP

$$\text{Accuracy} = \left(\frac{\overline{C_m} - C_a}{C_a} \right) \times 100$$

Mid Level Calibration Gas	
40 CFR 60 App. F Sources	40 CFR 266 Appendix IX Sources
Pollutant analyzers - 20 - 30 % of span	CO analyzers (200 ppm span) - 60 - 80 ppm
Oxygen analyzers - 4 - 6 % O_2	CO analyzers (3,000 ppm span) - 900 - 1200 ppm
Carbon dioxide analyzers - 5 -8 % CO_2	Oxygen analyzers - 8 - 10 % O_2

	Response
Trial No. 1:	4.91
Trial No. 2:	4.93
Trial No. 3:	4.93
Average (C_m) :	4.923

Gas type: Protocol
Concentration (C_a): 4.922 ppm
Tank serial #: CB0001187
Expiration Date: 12/13

Accuracy %: -0.74

High Level Calibration Gas	
40 CFR 60 App. F Sources	40 CFR 266 Appendix IX Sources
Pollutant analyzers - 50 - 60 % of span	CO analyzers (200 ppm span) - 140 - 160 ppm
Oxygen analyzers - 8 - 12 % O_2	CO analyzers (3,000 ppm span) - 2100 - 2400 ppm
Carbon dioxide analyzers - 10 -14 % CO_2	Oxygen analyzers - 14 - 16 % O_2

	Response
Trial No. 1:	9.95
Trial No. 2:	9.95
Trial No. 3:	9.96
Average (C_m) :	9.953

Gas type: Protocol
Concentration (C_a): 9.992 ppm
Tank serial #: EB0005877
Expiration Date: 12/13

Accuracy %: -0.26

40 CFR 266 Allowable Limit - 0.5 % O_2 or 5% of span for CO
40 CFR 60 Allowable limit - 15 % average response value or +/- 5 ppm

FORM# GSC-WP004-001
REV 2010-02, EFF 8/23/11

CYLINDER GAS AUDIT (CGA) ASSESSMENT DATA SHEET

Company:	Valero	**Analyzer Info**	
Location:	Houston, TX	Manufacturer:	Thermo
Source:	Mmosplenic Mtn - Nonki	Model No:	42C
CEMS type:	NOx	Range (ppm):	200
Audit Date:	5/29/12	Serial No.:	42CHL-63920-342
Project No.:	12 va 1173	Personnel:	DLPP

$$\text{Accuracy} = \left(\frac{\overline{C_m} - C_a}{C_a}\right) \times 100$$

Mid Level Calibration Gas	
40 CFR 60 App. F Sources	40 CFR 266 Appendix IX Sources
Pollutant analyzers - 20 - 30 % of span	CO analyzers (200 ppm span) - 60 - 80 ppm
Oxygen analyzers - 4 - 6 % O_2	CO analyzers (3,000 ppm span) - 900 - 1200 ppm
Carbon dioxide analyzers - 5 -8 % CO_2	Oxygen analyzers - 8 - 10 % O_2

	Response		
Trial No. 1:	47.6	Gas type:	Protocol
Trial No. 2:	47.4	Concentration (C_a):	50.1
Trial No. 3:	48.3	Tank serial #:	EB0006533 ppm
Average (C_m) :	47.77	Expiration Date:	12/13
Accuracy %:	-4.7		

High Level Calibration Gas	
40 CFR 60 App. F Sources	40 CFR 266 Appendix IX Sources
Pollutant analyzers - 50 - 60 % of span	CO analyzers (200 ppm span) - 140 - 160 ppm
Oxygen analyzers - 8 - 12 % O_2	CO analyzers (3,000 ppm span) - 2100 - 2400 ppm
Carbon dioxide analyzers - 10 -14 % CO_2	Oxygen analyzers - 14 - 16 % O_2

	Response		
Trial No. 1:	103.9	Gas type:	Protocol
Trial No. 2:	104.9	Concentration (C_a):	109.3 ppm
Trial No. 3:	105.0	Tank serial #:	EB0003623
Average (C_m) :	104.60	Expiration Date:	12/13
Accuracy %:	-4.3		

40 CFR 266 Allowable Limit - 0.5 % O_2 or 5% of span for CO
40 CFR 60 Allowable limit - 15 % average response value or +/- 5 ppm

FORM# GSC-WP004-001
REV 2010-02, EFF 8/23/11

CYLINDER GAS AUDIT (CGA)
ASSESSMENT DATA SHEET

Company:	Valero	**Analyzer Info**	
Location:	Houston, TX	Manufacturer:	Thermo
Source:	Atmospheric Hth - North	Model No:	48C
CEMS type:	CO	Range (ppm):	500
Audit Date:	5/29/12	Serial No.:	48C-64042-342
Project No.:	12 vol 173	Personnel:	DL-PP

$$\text{Accuracy} = \left(\frac{\overline{C_m} - C_a}{C_a}\right) \times 100$$

Mid Level Calibration Gas	
40 CFR 60 App. F Sources	40 CFR 266 Appendix IX Sources
Pollutant analyzers - 20 - 30 % of span	CO analyzers (200 ppm span) - 60 - 80 ppm
Oxygen analyzers - 4 - 6 % O_2	CO analyzers (3,000 ppm span) - 900 - 1200 ppm
Carbon dioxide analyzers - 5 -8 % CO_2	Oxygen analyzers - 8 - 10 % O_2

	Response		
Trial No. 1:	122.6	Gas type:	Protocol
Trial No. 2:	123.2	Concentration (C_a):	123.2
Trial No. 3:	123.2	Tank serial #:	EB0006533 ppm
Average (C_m) :	123.00	Expiration Date:	12/13
Accuracy %:	~~-0.16~~ -3.30		

High Level Calibration Gas	
40 CFR 60 App. F Sources	40 CFR 266 Appendix IX Sources
Pollutant analyzers - 50 - 60 % of span	CO analyzers (200 ppm span) - 140 - 160 ppm
Oxygen analyzers - 8 - 12 % O_2	CO analyzers (3,000 ppm span) - 2100 - 2400 ppm
Carbon dioxide analyzers - 10 -14 % CO_2	Oxygen analyzers - 14 - 16 % O_2

	Response		
Trial No. 1:	266.5	Gas type:	Protocol
Trial No. 2:	267.6	Concentration (C_a):	277.7 ppm
Trial No. 3:	265.5	Tank serial #:	EB0003623
Average (C_m) :	266.50	Expiration Date:	12/13
Accuracy %:	-4.0		

40 CFR 266 Allowable Limit - 0.5 % O_2 or 5% of span for CO
40 CFR 60 Allowable limit - 15 % average response value or +/- 5 ppm

Atmo Htr North 5-29-12

REALTIME DATA SAMPLES AND AVERAGES REPORT
Cirrus - Process Analysts, Inc.

Title: AH2 #2 CGA 05-29-12
Sample Interval: 10 seconds
Average Interval: 60 seconds

Date	Time	AH2-O2 % dry	AH2-NOx ppm dry	AH2-CO ppm dry		
12-05-29	12:28:50	0.00000	44.83673	110.48009	0.00000	0.00000
12-05-29	12:29:50	0.00000	47.60688	123.34058	0.00000	0.00000
12-05-29	12:30:50	0.00000	47.67109	122.83990	0.00000	0.00000
12-05-29	12:31:50	0.00000	47.64248	122.58717	0.00000	0.00000
12-05-29	12:32:50	0.00000	47.60434	123.65848	0.00000	0.00000
12-05-29	12:33:50	0.00000	75.82971	204.09577	0.00000	0.00000
12-05-29	12:34:50	0.00000	103.56680	265.55784	0.00000	0.00000
12-05-29	12:35:50	0.00000	103.83892	266.80240	0.00000	0.00000
12-05-29	12:36:50	0.00000	103.87198	266.47020	0.00000	0.00000
12-05-29	12:37:50	0.00000	91.28010	236.73419	0.00000	0.00000
12-05-29	12:38:50	0.00000	48.46901	134.60365	0.00000	0.00000
12-05-29	12:39:50	0.00000	47.70670	123.42006	0.00000	0.00000
12-05-29	12:40:50	0.00000	47.43521	123.24998	0.00000	0.00000
12-05-29	12:41:50	0.00000	59.70220	154.72966	0.00000	0.00000
12-05-29	12:42:50	0.00000	102.52473	257.13042	0.00000	0.00000
12-05-29	12:43:50	0.00000	104.37934	266.89142	0.00000	0.00000
12-05-29	12:44:50	0.00000	104.92167	267.55105	0.00000	0.00000
12-05-29	12:45:50	0.00000	105.25356	266.47974	0.00000	0.00000
12-05-29	12:46:50	0.00000	91.48928	226.29765	0.00000	0.00000
12-05-29	12:47:50	0.00000	49.94342	130.54252	0.00000	0.00000
12-05-29	12:48:50	0.00000	48.73477	123.09421	0.00000	0.00000
12-05-29	12:49:50	0.00000	48.29862	123.17210	0.00000	0.00000
12-05-29	12:50:50	0.00000	61.02719	163.45909	0.00000	0.00000
12-05-29	12:51:50	0.00000	103.53310	260.54144	0.00000	0.00000
12-05-29	12:52:50	0.00000	105.05265	265.47360	0.00000	0.00000
12-05-29	12:53:50	0.00000	105.48753	264.72336	0.00000	0.00000
12-05-29	12:54:50	2.20795	98.88355	231.07404	0.00000	0.00000
12-05-29	12:55:50	4.88003	11.97897	37.14618	0.00000	0.00000
12-05-29	12:56:50	4.89815	2.24435	3.92125	0.00000	0.00000
12-05-29	12:57:50	4.90148	1.23534	3.68124	0.00000	0.00000
12-05-29	12:58:50	4.90355	0.76486	3.51116	0.00000	0.00000
12-05-29	12:59:50	4.90880	0.42852	3.68124	0.00000	0.00000
12-05-29	13:00:50	9.12315	1.50111	6.43263	0.00000	0.00000
12-05-29	13:01:50	9.93617	0.39483	3.84972	0.00000	0.00000
12-05-29	13:02:50	9.94539	0.23143	3.24254	0.00000	0.00000
12-05-29	13:03:50	8.33437	0.00000	3.31248	0.00000	0.00000
12-05-29	13:04:50	4.94512	0.00000	3.33791	0.00000	0.00000
12-05-29	13:05:50	4.92556	0.00000	3.33314	0.00000	0.00000
12-05-29	13:06:50	6.22679	0.00000	3.33155	0.00000	0.00000
12-05-29	13:07:50	9.92281	0.00000	3.33791	0.00000	0.00000
12-05-29	13:08:50	9.95007	0.00000	3.49368	0.00000	0.00000
12-05-29	13:09:50	7.55353	0.00000	3.16625	0.00000	0.00000
12-05-29	13:10:50	4.94059	0.00000	3.33791	0.00000	0.00000
12-05-29	13:11:50	4.92739	0.00000	3.23142	0.00000	0.00000
12-05-29	13:12:50	4.92103	0.00000	3.15353	0.00000	0.00000
12-05-29	13:13:50	9.21812	0.00000	3.25526	0.00000	0.00000
12-05-29	13:14:50	9.94976	0.00000	3.14717	0.00000	0.00000
12-05-29	13:15:50	9.95548	0.00000	3.23618	0.00000	0.00000
12-05-29	13:16:50	9.95969	0.00000	3.24254	0.00000	0.00000
12-05-29	13:17:50	9.96390	0.00000	3.15353	0.00000	0.00000

GOLDEN SPECIALTY

Air Quality Test Report

APPENDIX H – Crude Atmospheric Heater South Stack CGA Results

CYLINDER GAS AUDIT (CGA)
ASSESSMENT DATA SHEET

Company:	Valero Refining-Texas, L.P.	**Analyzer Info**	
Location:	Houston, TX	**Manufacturer:**	Servomex
Source:	Crude Atmospheric Heater South Stack	**Model No:**	1440
CEMS type:	O_2	**Range (%):**	0 - 25 %
Audit Date:	May 29, 2012	**Serial No.:**	1056
Project No.:	12VALH173	**Personnel.:**	DL/PP

$$\text{Accuracy} = \left(\frac{\overline{C_m} - C_a}{C_a} \right) \times 100$$

Mid Level Calibration Gas	
40 CFR 60 App. F Sources	40 CFR 266 Appendix IX Sources
Pollutant analyzers - 20 - 30 % of span	CO analyzers (200 ppm span) - 60 - 80 ppm
Oxygen analyzers - 4 - 6 % O_2	CO analyzers (3,000 ppm span) - 900 - 1200 ppm
Carbon dioxide analyzers - 5 -8 % CO_2	Oxygen analyzers - 8 - 10 % O_2

	Response			
Trial No. 1:	4.87	Gas type:	Protocol	
Trial No. 2:	4.91	Concentration (C_a):	4.96	%
Trial No. 3:	4.92	Tank serial #:	EB0001188	
Average (C_m) :	4.90	Expiration Date:	December 7, 2013	
Accuracy %:	-1.21			

High Level Calibration Gas	
40 CFR 60 App. F Sources	40 CFR 266 Appendix IX Sources
Pollutant analyzers - 50 - 60 % of span	CO analyzers (200 ppm span) - 140 - 160 ppm
Oxygen analyzers - 8 - 12 % O_2	CO analyzers (3,000 ppm span) - 2100 - 2400 ppm
Carbon dioxide analyzers - 10 -14 % CO_2	Oxygen analyzers - 14 - 16 % O_2

	Response			
Trial No. 1:	9.94	Gas type:	Protocol	
Trial No. 2:	9.94	Concentration (C_a):	9.99	%
Trial No. 3:	9.94	Tank serial #:	EB0005877	
Average (C_m) :	9.94	Expiration Date:	December 7, 2013	
Accuracy %:	-0.50			

40 CFR 266 Allowable Limit - 0.5 % O_2 or 5% of span for CO
40 CFR 60 Allowable limit - 15 % average response value, ± 5 ppm, or ≤ 0.7% O_2 or CO_2

CYLINDER GAS AUDIT (CGA)
ASSESSMENT DATA SHEET

Company:	Valero Refining-Texas, L.P.	**Analyzer Info**	
Location:	Houston, TX	**Manufacturer:**	Thermo Scientific
Source:	Crude Atmospheric Heater South Stack	**Model No:**	42C
CEMS type:	NO_x	**Range (ppm):**	0 - 200 ppm
Audit Date:	May 29, 2012	**Serial No.:**	42CHL - 63970 - 342
Project No.:	12VALH173	**Personnel.:**	DL/PP

$$\text{Accuracy} = \left(\frac{\overline{C_m} - C_a}{C_a}\right) \times 100$$

Mid Level Calibration Gas	
40 CFR 60 App. F Sources	40 CFR 266 Appendix IX Sources
Pollutant analyzers - 20 - 30 % of span	CO analyzers (200 ppm span) - 60 - 80 ppm
Oxygen analyzers - 4 - 6 % O_2	CO analyzers (3,000 ppm span) - 900 - 1200 ppm
Carbon dioxide analyzers - 5 -8 % CO_2	Oxygen analyzers - 8 - 10 % O_2

	Response			
Trial No. 1:	48.60	Gas type:	Protocol	
Trial No. 2:	48.60	Concentration (C_a):	50.10	ppm
Trial No. 3:	48.90	Tank serial #:	EB0006533	
Average (C_m) :	48.70	Expiration Date:	December 16, 2013	
Accuracy %:	-2.79			

High Level Calibration Gas	
40 CFR 60 App. F Sources	40 CFR 266 Appendix IX Sources
Pollutant analyzers - 50 - 60 % of span	CO analyzers (200 ppm span) - 140 - 160 ppm
Oxygen analyzers - 8 - 12 % O_2	CO analyzers (3,000 ppm span) - 2100 - 2400 ppm
Carbon dioxide analyzers - 10 -14 % CO_2	Oxygen analyzers - 14 - 16 % O_2

	Response			
Trial No. 1:	107.90	Gas type:	Protocol	
Trial No. 2:	107.60	Concentration (C_a):	109.30	ppm
Trial No. 3:	107.50	Tank serial #:	EB0003623	
Average (C_m) :	107.67	Expiration Date:	December 16, 2013	
Accuracy %:	-1.49			

40 CFR 266 Allowable Limit - 0.5 % O_2 or 5% of span for CO
40 CFR 60 Allowable limit - 15 % average response value, ± 5 ppm, or ≤ 0.7% O_2 or CO_2

CYLINDER GAS AUDIT (CGA)
ASSESSMENT DATA SHEET

Company:	Valero Refining-Texas, L.P.	**Analyzer Info**	
Location:	Houston, TX	**Manufacturer:**	Thermo Scientific
Source:	Crude Atmospheric Heater South Stack	**Model No:**	48C
CEMS type:	CO	**Range (ppm):**	0 - 500 ppm
Audit Date:	May 29, 2012	**Serial No.:**	48C - 64042 - 342
Project No.:	12VALH173	**Personnel:**	DL/PP

$$\text{Accuracy} = \left(\frac{\overline{C_m} - C_a}{C_a}\right) \times 100$$

Mid Level Calibration Gas	
40 CFR 60 App. F Sources	40 CFR 266 Appendix IX Sources
Pollutant analyzers - 20 - 30 % of span	CO analyzers (200 ppm span) - 60 - 80 ppm
Oxygen analyzers - 4 - 6 % O_2	CO analyzers (3,000 ppm span) - 900 - 1200 ppm
Carbon dioxide analyzers - 5 -8 % CO_2	Oxygen analyzers - 8 - 10 % O_2

	Response			
Trial No. 1:	126.60	Gas type:	Protocol	
Trial No. 2:	124.90	Concentration (C_a):	127.20	ppm
Trial No. 3:	124.20	Tank serial #:	EB0006533	
Average (C_m) :	125.23	Expiration Date:	December 16, 2013	
Accuracy %:	-1.55			

High Level Calibration Gas	
40 CFR 60 App. F Sources	40 CFR 266 Appendix IX Sources
Pollutant analyzers - 50 - 60 % of span	CO analyzers (200 ppm span) - 140 - 160 ppm
Oxygen analyzers - 8 - 12 % O_2	CO analyzers (3,000 ppm span) - 2100 - 2400 ppm
Carbon dioxide analyzers - 10 -14 % CO_2	Oxygen analyzers - 14 - 16 % O_2

	Response			
Trial No. 1:	275.10	Gas type:	Protocol	
Trial No. 2:	274.20	Concentration (C_a):	277.70	ppm
Trial No. 3:	270.10	Tank serial #:	EB0003623	
Average (C_m) :	273.13	Expiration Date:	December 16, 2013	
Accuracy %:	-1.64			

40 CFR 266 Allowable Limit - 0.5 % O_2 or 5% of span for CO
40 CFR 60 Allowable limit - 15 % average response value, ± 5 ppm, or ≤ 0.7% O_2 or CO_2

FORM# GSC-WP004-001
REV 2010-02, EFF 8/23/11

CYLINDER GAS AUDIT (CGA)
ASSESSMENT DATA SHEET

Company: Valero
Location: Houston, TX
Source: Hydrogen Unit South
CEMS type: O2
Audit Date: 3/29/12
Project No.: 12va1173

Analyzer Info
Manufacturer: Siemens
Model No: 1420
Range (ppm): 25%
Serial No.: 1056
Personnel: DC M

$$\text{Accuracy} = \left(\frac{C_m - C_a}{C_a}\right) \times 100$$

Mid Level Calibration Gas	
40 CFR 60 App. F Sources	40 CFR 266 Appendix IX Sources
Pollutant analyzers - 20 - 30 % of span	CO analyzers (200 ppm span) - 60 - 80 ppm
Oxygen analyzers - 4 - 6 % O_2	CO analyzers (3,000 ppm span) - 900 - 1200 ppm
Carbon dioxide analyzers - 5 -8 % CO_2	Oxygen analyzers - 8 - 10 % O_2

	Response
Trial No. 1:	4.87
Trial No. 2:	4.91
Trial No. 3:	4.92
Average (C_m) :	4.900

Gas type: Protocol
Concentration (C_a): 4.96 %
Tank serial #: EB0010181 ppm
Expiration Date: 12/13

Accuracy %: -1.2

High Level Calibration Gas	
40 CFR 60 App. F Sources	40 CFR 266 Appendix IX Sources
Pollutant analyzers - 50 - 60 % of span	CO analyzers (200 ppm span) - 140 - 160 ppm
Oxygen analyzers - 8 - 12 % O_2	CO analyzers (3,000 ppm span) - 2100 - 2400 ppm
Carbon dioxide analyzers - 10 -14 % CO_2	Oxygen analyzers - 14 - 16 % O_2

	Response
Trial No. 1:	9.94
Trial No. 2:	9.94
Trial No. 3:	9.94
Average (C_m) :	9.940

Gas type: Protocol
Concentration (C_a): 9.99 % ppm
Tank serial #: EB0005877
Expiration Date: 12/13

Accuracy %: -0.50

40 CFR 266 Allowable Limit - 0.5 % O_2 or 5% of span for CO
40 CFR 60 Allowable limit - 15 % average response value or +/- 5 ppm

FORM# GSC-WP004-001
REV 2010-02, EFF 8/23/11

CYLINDER GAS AUDIT (CGA) ASSESSMENT DATA SHEET

Company:	Valero	**Analyzer Info**	BJ 6.2012
Location:	Houston, TX	Manufacturer:	~~[illegible]~~ Thermo
Source:	Atmospheric Hn. - South	Model No:	42C
CEMS type:	NOx	Range (ppm):	200
Audit Date:	5/29/12	Serial No.:	42CHL-67910-342
Project No.:	17 [illegible]	Personnel:	DL PP

$$\text{Accuracy} = \left(\frac{\overline{C_m} - C_a}{C_a}\right) \times 100$$

Mid Level Calibration Gas	
40 CFR 60 App. F Sources	40 CFR 266 Appendix IX Sources
Pollutant analyzers - 20 - 30 % of span	CO analyzers (200 ppm span) - 60 - 80 ppm
Oxygen analyzers - 4 - 6 % O_2	CO analyzers (3,000 ppm span) - 900 - 1200 ppm
Carbon dioxide analyzers - 5 -8 % CO_2	Oxygen analyzers - 8 - 10 % O_2

	Response		
Trial No. 1:	~~47.5~~ 48.6	Gas type:	Protocol
Trial No. 2:	48.6	Concentration (C_a):	50.1
Trial No. 3:	48.9	Tank serial #:	EB0006533 ppm
Average (C_m) :	48.70	Expiration Date:	12/13
Accuracy %:	-2.8		

High Level Calibration Gas	
40 CFR 60 App. F Sources	40 CFR 266 Appendix IX Sources
Pollutant analyzers - 50 - 60 % of span	CO analyzers (200 ppm span) - 140 - 160 ppm
Oxygen analyzers - 8 - 12 % O_2	CO analyzers (3,000 ppm span) - 2100 - 2400 ppm
Carbon dioxide analyzers - 10 -14 % CO_2	Oxygen analyzers - 14 - 16 % O_2

	Response		
Trial No. 1:	107.9	Gas type:	Protocol
Trial No. 2:	107.6	Concentration (C_a):	109.3 ppm
Trial No. 3:	107.5	Tank serial #:	EB0003623
Average (C_m) :	107.67	Expiration Date:	12/13
Accuracy %:	-1.5		

40 CFR 266 Allowable Limit - 0.5 % O_2 or 5% of span for CO
40 CFR 60 Allowable limit - 15 % average response value or +/- 5 ppm

FORM# GSC-WP004-001
REV 2010-02, EFF 8/23/11

CYLINDER GAS AUDIT (CGA)
ASSESSMENT DATA SHEET

Company:	Valero	**Analyzer Info**	6.20-12
Location:	Houston, TX	Manufacturer:	~~TECO~~ Thermo
Source:	Atmospheric Htr - South	Model No:	48C
CEMS type:	CO	Range (ppm):	500
Audit Date:	5/29/12	Serial No.:	48C-64042-342
Project No.:	12 va 6173	Personnel:	DLP

$$\text{Accuracy} = \left(\frac{\overline{C_m} - C_a}{C_a}\right) \times 100$$

Mid Level Calibration Gas	
40 CFR 60 App. F Sources	40 CFR 266 Appendix IX Sources
Pollutant analyzers - 20 - 30 % of span	CO analyzers (200 ppm span) - 60 - 80 ppm
Oxygen analyzers - 4 - 6 % O_2	CO analyzers (3,000 ppm span) - 900 - 1200 ppm
Carbon dioxide analyzers - 5 -8 % CO_2	Oxygen analyzers - 8 - 10 % O_2

	Response		
Trial No. 1:	~~138.2~~ 126.6	Gas type:	Protocol
Trial No. 2:	124.9	Concentration (C_a):	127.2
Trial No. 3:	124.2	Tank serial #:	EB0006533 ppm
Average (C_m):	125.23	Expiration Date:	12/13
Accuracy %:	-1.5		

High Level Calibration Gas	
40 CFR 60 App. F Sources	40 CFR 266 Appendix IX Sources
Pollutant analyzers - 50 - 60 % of span	CO analyzers (200 ppm span) - 140 - 160 ppm
Oxygen analyzers - 8 - 12 % O_2	CO analyzers (3,000 ppm span) - 2100 - 2400 ppm
Carbon dioxide analyzers - 10 -14 % CO_2	Oxygen analyzers - 14 - 16 % O_2

	Response		
Trial No. 1:	275.1	Gas type:	Protocol
Trial No. 2:	274.2	Concentration (C_a):	277.7 ppm
Trial No. 3:	270.1	Tank serial #:	EB0003623
Average (C_m):	273.13	Expiration Date:	12/13
Accuracy %:	-1.6		

40 CFR 266 Allowable Limit - 0.5 % O_2 or 5% of span for CO
40 CFR 60 Allowable limit - 15 % average response value or +/- 5 ppm

Atmo Htr South 5-29-12

REALTIME DATA SAMPLES AND AVERAGES REPORT
Cirrus - Process Analysts, Inc.

Title: ATM#1 CGA 05-29-12
Sample Interval: 10 seconds
Average Interval: 60 seconds

Date	Time	AH1-O2 % dry	AH1-CO ppm dry	AH1-NOx ppm dry		
12-05-29	11:06:20	1.89164	56.73177	21.53366	0.00000	0.00000
12-05-29	11:07:20	2.07181	53.40181	21.32957	0.00000	0.00000
12-05-29	11:08:20	1.95228	89.93286	21.36263	0.00000	0.00000
12-05-29	11:09:20	2.08540	82.55449	21.36454	0.00000	0.00000
12-05-29	11:10:20	2.05107	81.24634	21.53302	0.00000	0.00000
12-05-29	11:11:20	2.07753	48.15652	21.87063	0.00000	0.00000
12-05-29	11:12:20	1.97835	61.37624	21.52921	0.00000	0.00000
12-05-29	11:13:20	1.95363	63.05155	21.53175	0.00000	0.00000
12-05-29	11:14:20	2.07690	131.70602	21.36645	0.00000	0.00000
12-05-29	11:15:20	2.18681	75.25559	21.76827	0.00000	0.00000
12-05-29	11:16:20	2.19221	29.67880	21.86745	0.00000	0.00000
12-05-29	11:17:20	3.94064	46.24596	17.40482	0.00000	0.00000
12-05-29	11:18:20	3.84957	29.25599	0.40055	0.00000	0.00000
12-05-29	11:19:20	2.31556	144.07696	18.56642	0.00000	0.00000
12-05-29	11:20:20	2.27463	35.92387	21.93357	0.00000	0.00000
12-05-29	11:21:20	4.40684	23.85017	16.30363	0.00000	0.00000
12-05-29	11:22:20	4.85054	4.57294	0.09982	0.00000	0.00000
12-05-29	11:23:20	4.86278	3.65740	0.00000	0.00000	0.00000
12-05-29	11:24:20	4.86270	3.65263	0.00000	0.00000	0.00000
12-05-29	11:25:20	4.86644	3.65740	0.00000	0.00000	0.00000
12-05-29	11:26:20	7.50577	3.65263	0.00000	0.00000	0.00000
12-05-29	11:27:20	9.85852	3.56839	0.00000	0.00000	0.00000
12-05-29	11:28:20	9.93013	3.65263	0.00000	0.00000	0.00000
12-05-29	11:29:20	9.94419	3.65740	0.00000	0.00000	0.00000
12-05-29	11:30:20	9.65650	3.66217	0.00000	0.00000	0.00000
12-05-29	11:31:20	4.99193	3.65263	0.00000	0.00000	0.00000
12-05-29	11:32:20	4.92700	3.66693	0.00000	0.00000	0.00000
12-05-29	11:33:20	4.91174	3.56362	0.00000	0.00000	0.00000
12-05-29	11:34:20	7.52715	3.65263	0.00000	0.00000	0.00000
12-05-29	11:35:20	9.91590	3.65263	0.00000	0.00000	0.00000
12-05-29	11:36:20	9.94221	3.65263	0.00000	0.00000	0.00000
12-05-29	11:37:20	9.95007	3.65740	0.00000	0.00000	0.00000
12-05-29	11:38:20	7.22062	3.47461	0.00000	0.00000	0.00000
12-05-29	11:39:20	4.93733	3.56362	0.00000	0.00000	0.00000
12-05-29	11:40:20	4.91722	3.66217	0.00000	0.00000	0.00000
12-05-29	11:41:20	6.42000	3.48414	0.00000	0.00000	0.00000
12-05-29	11:42:20	9.90938	3.65740	0.00000	0.00000	0.00000
12-05-29	11:43:20	9.93958	3.65263	0.00000	0.00000	0.00000
12-05-29	11:44:20	9.94976	3.56362	0.00000	0.00000	0.00000
12-05-29	11:45:20	9.82125	3.47937	0.00000	0.00000	0.00000
12-05-29	11:46:20	0.15958	77.89095	31.66501	0.00000	0.00000
12-05-29	11:47:20	0.00000	136.53170	46.77526	0.00000	0.00000
12-05-29	11:48:20	0.00000	138.03693	47.27690	0.00000	0.00000
12-05-29	11:49:20	0.00000	138.20542	47.50388	0.00000	0.00000
12-05-29	11:50:20	0.00000	138.28807	47.66601	0.00000	0.00000
12-05-29	11:51:20	0.04713	146.16077	50.63389	0.00000	0.00000
12-05-29	11:52:20	0.00000	275.90538	99.95867	0.00000	0.00000
12-05-29	11:53:20	0.00000	319.39358	106.76420	0.00000	0.00000
12-05-29	11:54:20	0.00000	318.76733	107.23532	0.00000	0.00000
12-05-29	11:55:20	0.00000	319.59386	107.40635	0.00000	0.00000
12-05-29	11:56:20	0.00000	320.59524	107.64160	0.00000	0.00000

Atmo Htr South 5-29-12

12-05-29	11:57:20	0.00000	320.14064	107.70200	0.00000	0.00000
12-05-29	11:58:20	1.29511	263.53761	87.07752	0.00000	0.00000
12-05-29	11:59:20	2.28408	79.96522	24.42842	0.00000	0.00000
12-05-29	12:00:20	0.75739	123.21978	59.32581	0.00000	0.00000
12-05-29	12:01:20	0.00000	332.86284	147.97691	0.00000	0.00000
12-05-29	12:02:20	0.00000	306.29625	149.34831	0.00000	0.00000
12-05-29	12:03:20	0.00000	299.05775	138.98934	0.00000	0.00000
12-05-29	12:04:20	0.00000	276.38063	107.76303	0.00000	0.00000
12-05-29	12:05:20	0.00000	275.13606	107.93024	0.00000	0.00000
12-05-29	12:06:20	0.00000	248.30561	102.34099	0.00000	0.00000
12-05-29	12:07:20	0.00000	140.16206	49.90654	0.00000	0.00000
12-05-29	12:08:20	0.00000	126.78658	48.94204	0.00000	0.00000
12-05-29	12:09:20	0.00000	126.61968	48.61143	0.00000	0.00000
12-05-29	12:10:20	0.00000	143.49044	53.23555	0.00000	0.00000
12-05-29	12:11:20	0.00000	253.83859	105.55428	0.00000	0.00000
12-05-29	12:12:20	0.00000	272.78363	107.23150	0.00000	0.00000
12-05-29	12:13:20	0.00000	274.20781	107.60281	0.00000	0.00000
12-05-29	12:14:20	0.00000	249.23068	102.44399	0.00000	0.00000
12-05-29	12:15:20	0.00000	140.42274	49.70436	0.00000	0.00000
12-05-29	12:16:20	0.00000	126.36536	48.87147	0.00000	0.00000
12-05-29	12:17:20	0.00000	124.85059	48.57392	0.00000	0.00000
12-05-29	12:18:20	0.00000	124.53269	48.39780	0.00000	0.00000
12-05-29	12:19:20	0.00000	180.15183	71.72376	0.00000	0.00000
12-05-29	12:20:20	0.00000	265.97429	106.72923	0.00000	0.00000
12-05-29	12:21:20	0.00000	268.39030	107.30208	0.00000	0.00000
12-05-29	12:22:20	0.00000	270.13078	107.50172	0.00000	0.00000
12-05-29	12:23:20	0.00000	259.61002	105.34702	0.00000	0.00000
12-05-29	12:24:20	0.00000	152.63155	56.92887	0.00000	0.00000
12-05-29	12:25:20	0.00000	124.23387	48.93823	0.00000	0.00000
12-05-29	12:26:20	0.00000	124.81244	48.59999	0.00000	0.00000
12-05-29	12:27:20	0.00000	123.76021	48.39780	0.00000	0.00000

GOLDEN SPECIALTY

Air Quality Test Report

APPENDIX I – SRU B
Incinerator CGA Results

CYLINDER GAS AUDIT (CGA)
ASSESSMENT DATA SHEET

Company:	Valero Refining-Texas, L.P.	**Analyzer Info**	
Location:	Houston, TX	**Manufacturer:**	Ametek
Source:	SRU B Incinerator	**Model No:**	2000
CEMS type:	O_2	**Range (%):**	0 - 25 %
Audit Date:	May 31, 2012	**Serial No.:**	10209509
Project No.:	12VALH173	**Personnel:**	DL/PP/BJ

$$\text{Accuracy} = \left(\frac{\overline{C_m} - C_a}{C_a} \right) \times 100$$

Mid Level Calibration Gas	
40 CFR 60 App. F Sources	40 CFR 266 Appendix IX Sources
Pollutant analyzers - 20 - 30 % of span	CO analyzers (200 ppm span) - 60 - 80 ppm
Oxygen analyzers - 4 - 6 % O_2	CO analyzers (3,000 ppm span) - 900 - 1200 ppm
Carbon dioxide analyzers - 5 -8 % CO_2	Oxygen analyzers - 8 - 10 % O_2

	Response			
Trial No. 1:	4.86	Gas type:	Protocol	
Trial No. 2:	4.86	Concentration (C_a):	4.96	%
Trial No. 3:	4.86	Tank serial #:	EB0001188	
Average (C_m) :	4.86	Expiration Date:	December 7, 2014	
Accuracy %:	-2.02			

High Level Calibration Gas	
40 CFR 60 App. F Sources	40 CFR 266 Appendix IX Sources
Pollutant analyzers - 50 - 60 % of span	CO analyzers (200 ppm span) - 140 - 160 ppm
Oxygen analyzers - 8 - 12 % O_2	CO analyzers (3,000 ppm span) - 2100 - 2400 ppm
Carbon dioxide analyzers - 10 -14 % CO_2	Oxygen analyzers - 14 - 16 % O_2

	Response			
Trial No. 1:	9.78	Gas type:	Protocol	
Trial No. 2:	9.78	Concentration (C_a):	9.99	%
Trial No. 3:	9.78	Tank serial #:	EB0005877	
Average (C_m) :	9.78	Expiration Date:	December 7, 2014	
Accuracy %:	-2.10			

40 CFR 266 Allowable Limit - 0.5 % O_2 or 5% of span for CO
40 CFR 60 Allowable limit - 15 % average response value, ± 5 ppm, or ≤ 0.7% O_2 or CO_2

CYLINDER GAS AUDIT (CGA)
ASSESSMENT DATA SHEET

Company:	Valero Refining-Texas, L.P.	**Analyzer Info**	
Location:	Houston, TX	**Manufacturer:**	Western Research
Source:	SRU B Incinerator	**Model No:**	921
CEMS type:	SO_2	**Range (ppm):**	0 - 500 ppm
Audit Date:	May 31, 2012	**Serial No.:**	AX - 921 - 9764 - 1
project No.:	12VALH173	**Personnel:**	DL/PP/BJ

$$\text{Accuracy} = \left(\frac{\overline{C_m} - C_a}{C_a} \right) \times 100$$

Mid Level Calibration Gas	
40 CFR 60 App. F Sources	40 CFR 266 Appendix IX Sources
Pollutant analyzers - 20 - 30 % of span	CO analyzers (200 ppm span) - 60 - 80 ppm
Oxygen analyzers - 4 - 6 % O_2	CO analyzers (3,000 ppm span) - 900 - 1200 ppm
Carbon dioxide analyzers - 5 -8 % CO_2	Oxygen analyzers - 8 - 10 % O_2

	Response			
Trial No. 1:	139.07	Gas type:	Protocol	
Trial No. 2:	143.61	Concentration (C_a):	141.60	ppm
Trial No. 3:	144.62	Tank serial #:	EB0032821	
Average (C_m) :	142.43	Expiration Date:	January 4, 2014	
Accuracy %:	0.59			

High Level Calibration Gas	
40 CFR 60 App. F Sources	40 CFR 266 Appendix IX Sources
Pollutant analyzers - 50 - 60 % of span	CO analyzers (200 ppm span) - 140 - 160 ppm
Oxygen analyzers - 8 - 12 % O_2	CO analyzers (3,000 ppm span) - 2100 - 2400 ppm
Carbon dioxide analyzers - 10 -14 % CO_2	Oxygen analyzers - 14 - 16 % O_2

	Response			
Trial No. 1:	289.36	Gas type:	Protocol	
Trial No. 2:	288.10	Concentration (C_a):	288.10	ppm
Trial No. 3:	291.82	Tank serial #:	EB0032615	
Average (C_m) :	289.76	Expiration Date:	January 4, 2014	
Accuracy %:	0.58			

40 CFR 266 Allowable Limit - 0.5 % O_2 or 5% of span for CO

40 CFR 60 Allowable limit - 15 % average response value, ± 5 ppm, or ≤ 0.7% O_2 or CO_2

FORM# GSC-WP004-001
REV 2010-02, EFF 8/23/11

CYLINDER GAS AUDIT (CGA)
ASSESSMENT DATA SHEET

Company:	Valero	**Analyzer Info**	
Location:	Hou Tx	Manufacturer:	Ametek 2000
Source:	SRU B	Model No:	2000
CEMS type:	O2	Range (ppm):	0-25
Audit Date:	5.31.12	Serial No.:	10209509
Project No.:	12wah173	Personnel:	BJ-PPJRL

$$\text{Accuracy} = \left(\frac{\overline{C_m} - C_a}{C_a}\right) \times 100$$

Mid Level Calibration Gas	
40 CFR 60 App. F Sources	40 CFR 266 Appendix IX Sources
Pollutant analyzers - 20 - 30 % of span	CO analyzers (200 ppm span) - 60 - 80 ppm
Oxygen analyzers - 4 - 6 % O_2	CO analyzers (3,000 ppm span) - 900 - 1200 ppm
Carbon dioxide analyzers - 5 -8 % CO_2	Oxygen analyzers - 8 - 10 % O_2

	Response		
Trial No. 1:	4.86	Gas type:	Protocol
Trial No. 2:	4.86	Concentration (C_a):	4.96
Trial No. 3:	4.86	Tank serial #:	EB0001188 ppm
Average (C_m) :	4.86	Expiration Date:	12-7-14
Accuracy %:	-2.01		

High Level Calibration Gas	
40 CFR 60 App. F Sources	40 CFR 266 Appendix IX Sources
Pollutant analyzers - 50 - 60 % of span	CO analyzers (200 ppm span) - 140 - 160 ppm
Oxygen analyzers - 8 - 12 % O_2	CO analyzers (3,000 ppm span) - 2100 - 2400 ppm
Carbon dioxide analyzers - 10 -14 % CO_2	Oxygen analyzers - 14 - 16 % O_2

	Response		
Trial No. 1:	9.78	Gas type:	Protocol
Trial No. 2:	9.78	Concentration (C_a):	9.99 ppm
Trial No. 3:	9.78	Tank serial #:	EB0005877
Average (C_m) :	9.78	Expiration Date:	12-7-14
Accuracy %:	-2.10		

40 CFR 266 Allowable Limit - 0.5 % O_2 or 5% of span for CO
40 CFR 60 Allowable limit - 15 % average response value or +/- 5 ppm

FORM# GSC-WP004-001
REV 2010-02, EFF 8/23/11

CYLINDER GAS AUDIT (CGA)
ASSESSMENT DATA SHEET

Company: Valero
Location: Hou TX
Source: San 8
CEMS type: SO2
Audit Date: 5-31-12
Project No.: 12US0873

Analyzer Info
Manufacturer: ~~Ametek~~ Western Research RJ 6.20.12 6/21/12
Model No: 921CE
Range (ppm): 0-500
Serial No.: AX-921.9764.1
Personnel: RJ-PIOL

$$\text{Accuracy} = \left(\frac{\overline{C_m} - C_a}{C_s}\right) \times 100$$

Mid Level Calibration Gas	
40 CFR 60 App. F Sources	40 CFR 266 Appendix IX Sources
Pollutant analyzers - 20 - 30 % of span	CO analyzers (200 ppm span) - 60 - 80 ppm
Oxygen analyzers - 4 - 6 % O_2	CO analyzers (3,000 ppm span) - 900 - 1200 ppm
Carbon dioxide analyzers - 5 -8 % CO_2	Oxygen analyzers - 8 - 10 % O_2

Response
Trial No. 1: 139.07
Trial No. 2: 143.61
Trial No. 3: 144.62
Average (C_m): 142.43

Gas type: Protocol
Concentration (C_a): 141.6
Tank serial #: EB0032821 ppm
Expiration Date: 1-4-14

Accuracy %: 0.59

High Level Calibration Gas	
40 CFR 60 App. F Sources	40 CFR 266 Appendix IX Sources
Pollutant analyzers - 50 - 60 % of span	CO analyzers (200 ppm span) - 140 - 160 ppm
Oxygen analyzers - 8 - 12 % O_2	CO analyzers (3,000 ppm span) - 2100 - 2400 ppm
Carbon dioxide analyzers - 10 -14 % CO_2	Oxygen analyzers - 14 - 16 % O_2

Response
Trial No. 1: 289.36
Trial No. 2: 288.10
Trial No. 3: 291.82
Average (C_m): 289.76

Gas type: Protocol
Concentration (C_a): 288.0 ppm
Tank serial #: ~~EB0037265~~ EB0037265
Expiration Date: 1-14-14
RJ 6.1.12

Accuracy %: ~~0.96~~ 0.61
RJ 5.31.12

40 CFR 266 Allowable Limit - 0.5 % O_2 or 5% of span for CO
40 CFR 60 Allowable limit - 15 % average response value or +/- 5 ppm

SRU B 5-31-12

REALTIME DATA SAMPLES AND AVERAGES REPORT
Cirrus - Process Analysts, Inc.

Title: SRU--B-CGA 09-12-11
Sample Interval: 10 seconds
Average Interval: 60 seconds

Date	Time	U46 O2 % 1 min	U46 SO2 ppm 1 min			
12-05-31	10:43:00	4.07000	74.96000	0.00000	0.00000	0.00000
12-05-31	10:44:00	3.98000	75.33000	0.00000	0.00000	0.00000
12-05-31	10:45:00	4.00000	75.41000	0.00000	0.00000	0.00000
12-05-31	10:46:00	5.34000	9.54000	0.00000	0.00000	0.00000
12-05-31	10:47:00	4.86000	-3.04000	0.00000	0.00000	0.00000
12-05-31	10:48:00	4.86000	-4.76000	0.00000	0.00000	0.00000
12-05-31	10:49:00	4.86000	-5.42000	0.00000	0.00000	0.00000
12-05-31	10:50:00	7.24000	17.38000	0.00000	0.00000	0.00000
12-05-31	10:51:00	9.77000	0.02000	0.00000	0.00000	0.00000
12-05-31	10:52:00	9.78000	-0.93000	0.00000	0.00000	0.00000
12-05-31	10:53:00	9.78000	-0.07000	0.00000	0.00000	0.00000
12-05-31	10:54:00	9.78000	-0.31000	0.00000	0.00000	0.00000
12-05-31	10:55:00	5.56000	-0.58000	0.00000	0.00000	0.00000
12-05-31	10:56:00	4.87000	-0.61000	0.00000	0.00000	0.00000
12-05-31	10:57:00	4.86000	-0.77000	0.00000	0.00000	0.00000
12-05-31	10:58:00	5.27000	-0.62000	0.00000	0.00000	0.00000
12-05-31	10:59:00	9.50000	-0.74000	0.00000	0.00000	0.00000
12-05-31	11:00:00	9.77000	-0.95000	0.00000	0.00000	0.00000
12-05-31	11:01:00	9.78000	-0.73000	0.00000	0.00000	0.00000
12-05-31	11:02:00	8.97000	-0.10000	0.00000	0.00000	0.00000
12-05-31	11:03:00	4.99000	-0.21000	0.00000	0.00000	0.00000
12-05-31	11:04:00	4.86000	-0.31000	0.00000	0.00000	0.00000
12-05-31	11:05:00	4.87000	-0.29000	0.00000	0.00000	0.00000
12-05-31	11:06:00	9.05000	-0.33000	0.00000	0.00000	0.00000
12-05-31	11:07:00	9.78000	-0.32000	0.00000	0.00000	0.00000
12-05-31	11:08:00	9.78000	-0.29000	0.00000	0.00000	0.00000
12-05-31	11:09:00	9.79000	-0.27000	0.00000	0.00000	0.00000
12-05-31	11:10:00	9.78000	-0.25000	0.00000	0.00000	0.00000
12-05-31	11:11:00	5.83000	0.42000	0.00000	0.00000	0.00000
12-05-31	11:12:00	4.20000	66.02000	0.00000	0.00000	0.00000
12-05-31	11:13:00	1.52000	122.17000	0.00000	0.00000	0.00000
12-05-31	11:14:00	0.15000	137.14000	0.00000	0.00000	0.00000
12-05-31	11:15:00	0.14000	139.07000	0.00000	0.00000	0.00000
12-05-31	11:16:00	0.22000	165.23000	0.00000	0.00000	0.00000
12-05-31	11:17:00	0.20000	283.23000	0.00000	0.00000	0.00000
12-05-31	11:18:00	0.14000	289.36000	0.00000	0.00000	0.00000
12-05-31	11:19:00	0.14000	276.30000	0.00000	0.00000	0.00000
12-05-31	11:20:00	0.13000	149.90000	0.00000	0.00000	0.00000
12-05-31	11:21:00	0.13000	144.50000	0.00000	0.00000	0.00000
12-05-31	11:22:00	0.13000	143.61000	0.00000	0.00000	0.00000
12-05-31	11:23:00	0.13000	142.76000	0.00000	0.00000	0.00000
12-05-31	11:24:00	0.13000	201.82000	0.00000	0.00000	0.00000
12-05-31	11:25:00	0.13000	288.10000	0.00000	0.00000	0.00000
12-05-31	11:26:00	0.13000	291.72000	0.00000	0.00000	0.00000
12-05-31	11:27:00	0.13000	292.71000	0.00000	0.00000	0.00000
12-05-31	11:28:00	0.13000	192.11000	0.00000	0.00000	0.00000
12-05-31	11:29:00	0.13000	146.21000	0.00000	0.00000	0.00000
12-05-31	11:30:00	0.13000	144.62000	0.00000	0.00000	0.00000
12-05-31	11:31:00	0.13000	144.02000	0.00000	0.00000	0.00000
12-05-31	11:32:00	0.13000	262.20000	0.00000	0.00000	0.00000
12-05-31	11:33:00	0.13000	291.82000	0.00000	0.00000	0.00000

SRU B 5-31-12

12-05-31 11:34:00	0.13000	293.04000	0.00000	0.00000	0.00000
Average	4.12096	93.05423	0.00000	0.00000	0.00000

GOLDEN SPECIALTY

Air Quality Test Report

APPENDIX J – SRU C
Incinerator CGA Results

CYLINDER GAS AUDIT (CGA)
ASSESSMENT DATA SHEET

Company:	Valero Refining-Texas, L.P.	**Analyzer Info**	
Location:	Houston, TX	**Manufacturer:**	Ametek
Source:	SRU C Incinerator	**Model No:**	2000
CEMS type:	O_2	**Range (%):**	0 - 25 %
Audit Date:	May 31, 2012	**Serial No.:**	10209586
Project No.:	12VALH173	**Personnel:**	DL/PP/BJ

$$\text{Accuracy} = \left(\frac{\overline{C_m} - C_a}{C_a}\right) \times 100$$

Mid Level Calibration Gas	
40 CFR 60 App. F Sources	40 CFR 266 Appendix IX Sources
Pollutant analyzers - 20 - 30 % of span	CO analyzers (200 ppm span) - 60 - 80 ppm
Oxygen analyzers - 4 - 6 % O_2	CO analyzers (3,000 ppm span) - 900 - 1200 ppm
Carbon dioxide analyzers - 5 -8 % CO_2	Oxygen analyzers - 8 - 10 % O_2

	Response		
Trial No. 1:	5.09	Gas type:	Protocol
Trial No. 2:	5.10	Concentration (C_a):	4.96 %
Trial No. 3:	5.10	Tank serial #:	EB0001188
Average (C_m) :	5.10	Expiration Date:	December 7, 2014
Accuracy %:	2.76		

High Level Calibration Gas	
40 CFR 60 App. F Sources	40 CFR 266 Appendix IX Sources
Pollutant analyzers - 50 - 60 % of span	CO analyzers (200 ppm span) - 140 - 160 ppm
Oxygen analyzers - 8 - 12 % O_2	CO analyzers (3,000 ppm span) - 2100 - 2400 ppm
Carbon dioxide analyzers - 10 -14 % CO_2	Oxygen analyzers - 14 - 16 % O_2

	Response		
Trial No. 1:	10.02	Gas type:	Protocol
Trial No. 2:	10.02	Concentration (C_a):	9.99 %
Trial No. 3:	10.02	Tank serial #:	EB0005877
Average (C_m) :	10.02	Expiration Date:	December 7, 2014
Accuracy %:	0.30		

40 CFR 266 Allowable Limit - 0.5 % O_2 or 5% of span for CO
40 CFR 60 Allowable limit - 15 % average response value, ± 5 ppm, or ≤ 0.7% O_2 or CO_2

CYLINDER GAS AUDIT (CGA)
ASSESSMENT DATA SHEET

Company:	Valero Refining-Texas, L.P.	**Analyzer Info**	
Location:	Houston, TX	**Manufacturer:**	Western Research
Source:	SRU C Incinerator	**Model No:**	921
CEMS type:	SO_2	**Range (ppm):**	0 - 500 ppm
Audit Date:	May 31, 2012	**Serial No.:**	AD - 921 - 9816 - 2
project No.:	12VALH173	**Personnel:**	DL/PP/BJ

$$\text{Accuracy} = \left(\frac{\overline{C_m} - C_a}{C_a}\right) \times 100$$

Mid Level Calibration Gas	
40 CFR 60 App. F Sources	40 CFR 266 Appendix IX Sources
Pollutant analyzers - 20 - 30 % of span	CO analyzers (200 ppm span) - 60 - 80 ppm
Oxygen analyzers - 4 - 6 % O_2	CO analyzers (3,000 ppm span) - 900 - 1200 ppm
Carbon dioxide analyzers - 5 -8 % CO_2	Oxygen analyzers - 8 - 10 % O_2

	Response		
Trial No. 1:	132.83	Gas type:	Protocol
Trial No. 2:	141.77	Concentration (C_a):	141.60 ppm
Trial No. 3:	145.09	Tank serial #:	EB0032821
Average (C_m) :	139.90	Expiration Date:	January 4, 2014
Accuracy %:	-1.20		

High Level Calibration Gas	
40 CFR 60 App. F Sources	40 CFR 266 Appendix IX Sources
Pollutant analyzers - 50 - 60 % of span	CO analyzers (200 ppm span) - 140 - 160 ppm
Oxygen analyzers - 8 - 12 % O_2	CO analyzers (3,000 ppm span) - 2100 - 2400 ppm
Carbon dioxide analyzers - 10 -14 % CO_2	Oxygen analyzers - 14 - 16 % O_2

	Response		
Trial No. 1:	285.03	Gas type:	Protocol
Trial No. 2:	294.13	Concentration (C_a):	288.10 ppm
Trial No. 3:	294.25	Tank serial #:	EB0032615
Average (C_m) :	291.14	Expiration Date:	January 4, 2014
Accuracy %:	1.05		

40 CFR 266 Allowable Limit - 0.5 % O_2 or 5% of span for CO

40 CFR 60 Allowable limit - 15 % average response value, ± 5 ppm, or ≤ 0.7% O_2 or CO_2

FORM# GSC-WP004-001
REV 2010-02, EFF 8/23/11

CYLINDER GAS AUDIT (CGA) ASSESSMENT DATA SHEET

Company: Valero
Location: Hou Tx
Source: O2 SRU C
CEMS type: O2
Audit Date: 5-31-12
Project No.: 12VaLH 173

Analyzer Info
Manufacturer: Ametek
Model No: 2000
Range (ppm): 0-25
Serial No.: ~~[illegible]~~ 102095806
Personnel: BJ/[illegible]
BJ 6-20-12

$$\text{Accuracy} = \left(\frac{\overline{C_m} - C_a}{C_a}\right) \times 100$$

Mid Level Calibration Gas	
40 CFR 60 App. F Sources	40 CFR 266 Appendix IX Sources
Pollutant analyzers - 20 - 30 % of span	CO analyzers (200 ppm span) - 60 - 80 ppm
Oxygen analyzers - 4 - 6 % O_2	CO analyzers (3,000 ppm span) - 900 - 1200 ppm
Carbon dioxide analyzers - 5 -8 % CO_2	Oxygen analyzers - 8 - 10 % O_2

Response
Trial No. 1: 5.09
Trial No. 2: 5.10
Trial No. 3: 5.10
Average (C_m) : 5.10

Gas type: Protocol
Concentration (C_a): 4.96
Tank serial #: EB0001188 ppm
Expiration Date: 12-7-14

Accuracy %: 2.75

High Level Calibration Gas	
40 CFR 60 App. F Sources	40 CFR 266 Appendix IX Sources
Pollutant analyzers - 50 - 60 % of span	CO analyzers (200 ppm span) - 140 - 160 ppm
Oxygen analyzers - 8 - 12 % O_2	CO analyzers (3,000 ppm span) - 2100 - 2400 ppm
Carbon dioxide analyzers - 10 -14 % CO_2	Oxygen analyzers - 14 - 16 % O_2

Response
Trial No. 1: 10.02
Trial No. 2: 10.02
Trial No. 3: 10.02
Average (C_m) : 10.02

Gas type: Protocol
Concentration (C_a): 9.99 ppm
Tank serial #: EB0005877
Expiration Date: 12-7-14

Accuracy %: 0.30

40 CFR 266 Allowable Limit - 0.5 % O_2 or 5% of span for CO
40 CFR 60 Allowable limit - 15 % average response value or +/- 5 ppm

FORM# GSC-WP004-001
REV 2010-02, EFF 8/23/11

CYLINDER GAS AUDIT (CGA)
ASSESSMENT DATA SHEET

Company: Valero
Location: Houston
Source: SRU C
CEMS type: SO_2
Audit Date: 5-31-12
Project No.: 12091473

Analyzer Info ~~Ameter~~ BS 6.20.12
Manufacturer: ~~Western Research~~ Western Reservation 6/21/12
Model No: 921E
Range (ppm): 0-500
Serial No.: AD 921 9816 2
Personnel: BS/DLP

$$\text{Accuracy} = \left(\frac{\overline{C_m} - C_a}{C_a}\right) \times 100$$

Mid Level Calibration Gas	
40 CFR 60 App. F Sources	40 CFR 266 Appendix IX Sources
Pollutant analyzers - 20 - 30 % of span	CO analyzers (200 ppm span) - 60 - 80 ppm
Oxygen analyzers - 4 - 6 % O_2	CO analyzers (3,000 ppm span) - 900 - 1200 ppm
Carbon dioxide analyzers - 5 -8 % CO_2	Oxygen analyzers - 8 - 10 % O_2

Response
Trial No. 1: 132.83
Trial No. 2: 141.77
Trial No. 3: 145.09
Average (C_m): 139.90

Gas type: Protocol
Concentration (C_a): 141.6
Tank serial #: EB0032821 ppm
Expiration Date: 1-4-14

Accuracy %: -1.20

High Level Calibration Gas	
40 CFR 60 App. F Sources	40 CFR 266 Appendix IX Sources
Pollutant analyzers - 50 - 60 % of span	CO analyzers (200 ppm span) - 140 - 160 ppm
Oxygen analyzers - 8 - 12 % O_2	CO analyzers (3,000 ppm span) - 2100 - 2400 ppm
Carbon dioxide analyzers - 10 -14 % CO_2	Oxygen analyzers - 14 - 16 % O_2

Response
Trial No. 1: 285.03
Trial No. 2: 294.13
Trial No. 3: 294.25
Average (C_m): 291.14

Gas type: Protocol
Concentration (C_a): 288.0 ppm
Tank serial #: ~~EB0032615~~ EB0032615
Expiration Date: 1-4-14 BS 6.20.12

Accuracy %: 1.05

40 CFR 266 Allowable Limit - 0.5 % O_2 or 5% of span for CO
40 CFR 60 Allowable limit - 15 % average response value or +/- 5 ppm

SRU C 5-31-12

REALTIME DATA SAMPLES AND AVERAGES REPORT
Cirrus - Process Analysts, Inc.

Title: SRU-C
Sample Interval: 10 seconds
Average Interval: 60 seconds

Date	Time	U39 O2 % 1 min	U39 SO2 ppm 1 min			
12-05-31	11:43:40	13.18000	56.82333	0.00000	0.00000	0.00000
12-05-31	11:44:40	19.44000	26.40667	0.00000	0.00000	0.00000
12-05-31	11:45:40	20.97333	6.80667	0.00000	0.00000	0.00000
12-05-31	11:46:40	17.22000	0.73000	0.00000	0.00000	0.00000
12-05-31	11:47:40	9.78000	28.60000	0.00000	0.00000	0.00000
12-05-31	11:48:40	6.84000	51.36667	0.00000	0.00000	0.00000
12-05-31	11:49:40	6.83333	57.16667	0.00000	0.00000	0.00000
12-05-31	11:50:40	6.85667	58.15000	0.00000	0.00000	0.00000
12-05-31	11:51:40	6.89667	58.48333	0.00000	0.00000	0.00000
12-05-31	11:52:40	6.89333	59.40667	0.00000	0.00000	0.00000
12-05-31	11:53:40	6.88667	60.18333	0.00000	0.00000	0.00000
12-05-31	11:54:40	6.87667	60.13000	0.00000	0.00000	0.00000
12-05-31	11:55:40	6.83667	59.99000	0.00000	0.00000	0.00000
12-05-31	11:56:40	6.86667	60.05333	0.00000	0.00000	0.00000
12-05-31	11:57:40	6.91000	59.45000	0.00000	0.00000	0.00000
12-05-31	11:58:40	6.93333	59.64333	0.00000	0.00000	0.00000
12-05-31	11:59:40	7.37333	49.74667	0.00000	0.00000	0.00000
12-05-31	12:00:40	5.94333	18.43667	0.00000	0.00000	0.00000
12-05-31	12:01:40	5.10667	2.68000	0.00000	0.00000	0.00000
12-05-31	12:02:40	5.10000	0.14667	0.00000	0.00000	0.00000
12-05-31	12:03:40	5.09333	-1.33333	0.00000	0.00000	0.00000
12-05-31	12:04:40	5.09000	-2.51000	0.00000	0.00000	0.00000
12-05-31	12:05:40	4.99667	2.43333	0.00000	0.00000	0.00000
12-05-31	12:06:40	8.19667	12.55667	0.00000	0.00000	0.00000
12-05-31	12:07:40	9.94667	4.00333	0.00000	0.00000	0.00000
12-05-31	12:08:40	7.83000	23.43333	0.00000	0.00000	0.00000
12-05-31	12:09:40	7.77333	38.23333	0.00000	0.00000	0.00000
12-05-31	12:10:40	9.43667	13.58000	0.00000	0.00000	0.00000
12-05-31	12:11:40	10.01667	-1.55000	0.00000	0.00000	0.00000
12-05-31	12:12:40	10.02000	-3.34000	0.00000	0.00000	0.00000
12-05-31	12:13:40	10.02000	-3.96667	0.00000	0.00000	0.00000
12-05-31	12:14:40	9.40667	-4.42000	0.00000	0.00000	0.00000
12-05-31	12:15:40	6.45333	-4.85000	0.00000	0.00000	0.00000
12-05-31	12:16:40	5.11667	-5.21667	0.00000	0.00000	0.00000
12-05-31	12:17:40	5.10333	-5.46333	0.00000	0.00000	0.00000
12-05-31	12:18:40	5.10000	-5.67000	0.00000	0.00000	0.00000
12-05-31	12:19:40	7.45333	-5.82000	0.00000	0.00000	0.00000
12-05-31	12:20:40	9.55000	-5.97333	0.00000	0.00000	0.00000
12-05-31	12:21:40	10.01667	-6.11667	0.00000	0.00000	0.00000
12-05-31	12:22:40	10.02000	-6.26667	0.00000	0.00000	0.00000
12-05-31	12:23:40	9.03333	-6.40000	0.00000	0.00000	0.00000
12-05-31	12:24:40	6.26667	-6.52000	0.00000	0.00000	0.00000
12-05-31	12:25:40	5.11000	-6.68000	0.00000	0.00000	0.00000
12-05-31	12:26:40	5.10000	-6.76000	0.00000	0.00000	0.00000
12-05-31	12:27:40	5.09333	-6.80333	0.00000	0.00000	0.00000
12-05-31	12:28:40	8.03667	-6.87333	0.00000	0.00000	0.00000
12-05-31	12:29:40	9.84333	-6.88000	0.00000	0.00000	0.00000
12-05-31	12:30:40	10.01667	-6.91667	0.00000	0.00000	0.00000
12-05-31	12:31:40	10.02000	-7.00667	0.00000	0.00000	0.00000
12-05-31	12:32:40	10.02000	-7.08667	0.00000	0.00000	0.00000
12-05-31	12:33:40	9.78000	-7.14333	0.00000	0.00000	0.00000

SRU C 5-31-12

REALTIME DATA SAMPLES AND AVERAGES REPORT
Cirrus - Process Analysts, Inc.

Title: SRU-C
Sample Interval: 10 seconds
Average Interval: 60 seconds

Date	Time	U39 O2 % 1 min	U39 SO2 ppm 1 min			
12-05-31	11:43:40	13.18000	56.82333	0.00000	0.00000	0.00000
12-05-31	11:44:40	19.44000	26.40667	0.00000	0.00000	0.00000
12-05-31	11:45:40	20.97333	6.80667	0.00000	0.00000	0.00000
12-05-31	11:46:40	17.22000	0.73000	0.00000	0.00000	0.00000
12-05-31	11:47:40	9.78000	28.60000	0.00000	0.00000	0.00000
12-05-31	11:48:40	6.84000	51.36667	0.00000	0.00000	0.00000
12-05-31	11:49:40	6.83333	57.16667	0.00000	0.00000	0.00000
12-05-31	11:50:40	6.85667	58.15000	0.00000	0.00000	0.00000
12-05-31	11:51:40	6.89667	58.48333	0.00000	0.00000	0.00000
12-05-31	11:52:40	6.89333	59.40667	0.00000	0.00000	0.00000
12-05-31	11:53:40	6.88667	60.18333	0.00000	0.00000	0.00000
12-05-31	11:54:40	6.87667	60.13000	0.00000	0.00000	0.00000
12-05-31	11:55:40	6.83667	59.99000	0.00000	0.00000	0.00000
12-05-31	11:56:40	6.86667	60.05333	0.00000	0.00000	0.00000
12-05-31	11:57:40	6.91000	59.45000	0.00000	0.00000	0.00000
12-05-31	11:58:40	6.93333	59.64333	0.00000	0.00000	0.00000
12-05-31	11:59:40	7.37333	49.74667	0.00000	0.00000	0.00000
12-05-31	12:00:40	5.94333	18.43667	0.00000	0.00000	0.00000
12-05-31	12:01:40	5.10667	2.68000	0.00000	0.00000	0.00000
12-05-31	12:02:40	5.10000	0.14667	0.00000	0.00000	0.00000
12-05-31	12:03:40	5.09333	-1.33333	0.00000	0.00000	0.00000
12-05-31	12:04:40	5.09000	-2.51000	0.00000	0.00000	0.00000
12-05-31	12:05:40	4.99667	2.43333	0.00000	0.00000	0.00000
12-05-31	12:06:40	8.19667	12.55667	0.00000	0.00000	0.00000
12-05-31	12:07:40	9.94667	4.00333	0.00000	0.00000	0.00000
12-05-31	12:08:40	7.83000	23.43333	0.00000	0.00000	0.00000
12-05-31	12:09:40	7.77333	38.23333	0.00000	0.00000	0.00000
12-05-31	12:10:40	9.43667	13.58000	0.00000	0.00000	0.00000
12-05-31	12:11:40	10.01667	-1.55000	0.00000	0.00000	0.00000
12-05-31	12:12:40	10.02000	-3.34000	0.00000	0.00000	0.00000
12-05-31	12:13:40	10.02000	-3.96667	0.00000	0.00000	0.00000
12-05-31	12:14:40	9.40667	-4.42000	0.00000	0.00000	0.00000
12-05-31	12:15:40	6.45333	-4.85000	0.00000	0.00000	0.00000
12-05-31	12:16:40	5.11667	-5.21667	0.00000	0.00000	0.00000
12-05-31	12:17:40	5.10333	-5.46333	0.00000	0.00000	0.00000
12-05-31	12:18:40	5.10000	-5.67000	0.00000	0.00000	0.00000
12-05-31	12:19:40	7.45333	-5.82000	0.00000	0.00000	0.00000
12-05-31	12:20:40	9.55000	-5.97333	0.00000	0.00000	0.00000
12-05-31	12:21:40	10.01667	-6.11667	0.00000	0.00000	0.00000
12-05-31	12:22:40	10.02000	-6.26667	0.00000	0.00000	0.00000
12-05-31	12:23:40	9.03333	-6.40000	0.00000	0.00000	0.00000
12-05-31	12:24:40	6.26667	-6.52000	0.00000	0.00000	0.00000
12-05-31	12:25:40	5.11000	-6.68000	0.00000	0.00000	0.00000
12-05-31	12:26:40	5.10000	-6.76000	0.00000	0.00000	0.00000
12-05-31	12:27:40	5.09333	-6.80333	0.00000	0.00000	0.00000
12-05-31	12:28:40	8.03667	-6.87333	0.00000	0.00000	0.00000
12-05-31	12:29:40	9.84333	-6.88000	0.00000	0.00000	0.00000
12-05-31	12:30:40	10.01667	-6.91667	0.00000	0.00000	0.00000
12-05-31	12:31:40	10.02000	-7.00667	0.00000	0.00000	0.00000
12-05-31	12:32:40	10.02000	-7.08667	0.00000	0.00000	0.00000
12-05-31	12:33:40	9.78000	-7.14333	0.00000	0.00000	0.00000

SRU C 5-31-12

12-05-31 12:34:40	5.35333	77.86000	0.00000	0.00000	0.00000
12-05-31 12:35:40	1.17333	116.21000	0.00000	0.00000	0.00000
12-05-31 12:36:40	0.14000	123.97667	0.00000	0.00000	0.00000
12-05-31 12:37:40	0.12333	130.70000	0.00000	0.00000	0.00000
12-05-31 12:38:40	0.11333	132.83333	0.00000	0.00000	0.00000
12-05-31 12:39:40	0.11000	160.93667	0.00000	0.00000	0.00000
12-05-31 12:40:40	0.11000	244.74000	0.00000	0.00000	0.00000
12-05-31 12:41:40	0.10333	285.03667	0.00000	0.00000	0.00000
12-05-31 12:42:40	0.10000	289.11667	0.00000	0.00000	0.00000
12-05-31 12:43:40	0.10000	289.91333	0.00000	0.00000	0.00000
12-05-31 12:44:40	0.10000	197.56333	0.00000	0.00000	0.00000
12-05-31 12:45:40	0.10000	145.13667	0.00000	0.00000	0.00000
12-05-31 12:46:40	0.10000	141.77333	0.00000	0.00000	0.00000
12-05-31 12:47:40	0.10000	141.36333	0.00000	0.00000	0.00000
12-05-31 12:48:40	0.10000	216.16667	0.00000	0.00000	0.00000
12-05-31 12:49:40	0.09333	279.38667	0.00000	0.00000	0.00000
12-05-31 12:50:40	0.09000	294.12667	0.00000	0.00000	0.00000
12-05-31 12:51:40	0.09000	296.06667	0.00000	0.00000	0.00000
12-05-31 12:52:40	0.09000	297.01000	0.00000	0.00000	0.00000
12-05-31 12:53:40	0.09000	259.63667	0.00000	0.00000	0.00000
12-05-31 12:54:40	0.09000	177.98000	0.00000	0.00000	0.00000
12-05-31 12:55:40	0.09000	146.00333	0.00000	0.00000	0.00000
12-05-31 12:56:40	0.09000	145.09667	0.00000	0.00000	0.00000
12-05-31 12:57:40	0.09000	177.60000	0.00000	0.00000	0.00000
12-05-31 12:58:40	0.09000	259.19000	0.00000	0.00000	0.00000
12-05-31 12:59:40	0.09000	294.25333	0.00000	0.00000	0.00000
12-05-31 13:00:40	0.09000	296.43000	0.00000	0.00000	0.00000
12-05-31 13:01:40	1.59000	258.86000	0.00000	0.00000	0.00000