AR-42
AR-1460-90002

NSPS-ET
PSD-ET

PEDCo ENVIRONMENTAL, INC.
1006 N. BOWEN ROAD
ARLINGTON, TEXAS 76012
(817) 460-0777
TELECOPIER (817) 460-3651

1/3 + 9 + 7 digits

May 31, 1983

RECEIVED
JUN 14 1983

Dr. George Marusak
U.S. Environmental Protection Agency
Region 6
Mail Drop 6ES-SC
1201 Elm Street
Dallas, Texas 75270

Reference: PN 3760-1-93, Air Pollution Inspection of Nekoosa Papers, Inc., Ashdown, AR - CDS 1460 60002, NSPS 1460 90002, PSD-AR-042

Dear George:

On April 5, 1983, Harold Lewis, L. E. Cummings, and W. T. Westbrook, Arkansas Department of Pollution Control and Ecology (ADPCE), and I conducted an NSPS/PSD inspection at Nekoosa Papers, Inc., Ashdown, Arkansas. Nekoosa's mailing address is P.O. Box 496, Ashdown, Arkansas 71822.

NSPS
PSD

The purpose of the inspection was to train the ADPCE personnel how to conduct air compliance inspections and to determine whether Nekoosa meets the New Source Performance Standards (NSPS) Subparts D and BB and the Prevention of Significant Deterioration permit PSD-AR-42. Mr. Bill Matthews, Process Environmental Engineer at Nekoosa, showed us the areas of concern.

The most recent NSPS/PSD inspection conducted on January 26, 1982, indicates Nekoosa is in compliance with NSPS and PSD regulations with the exception of continuous emission monitoring requirements. It was questioned whether the company was exempt from operating the continuous emission nitrogen oxides monitor on the No. 2 power boiler although the inspection report mistakenly refers to the No. 2 recovery boiler. The No. 2 power boiler is subject to NSPS Subpart D, Section 60.45, Emission and Fuel Monitoring. Nekoosa contends that stack tests conducted in 1977 showed that the nitrogen oxides emissions are less than 70 percent of the standard; thus, they are exempt from operating the emission monitor according to 40 CFR Paragraph 60.45(3).

Production at the time of the inspection was 1,200 air-dried tons of pulp per day (ADTPD). The maximum design capacity is 1,335 ADTPD. During the inspection the No. 2 power boiler was burning coal at 18.5 ton/h. The boiler has the capability to burn wood waste at a rate of 20 ton/h. Steam production averaged 400,000 lb/h at 940 psi. Emissions are controlled by two scrubbers that emit through a common stack, Emission Point 4.

The No. 2 recovery boiler was burning 440 gal/min of black liquor with 67 percent solids. The recovery boiler was operating at about maximum load because the No. 1 recovery boiler was shut down during the inspection. Emissions from the recovery boiler are controlled by two electrostatic precipitators that emit through a common stack (Emission Point 2). Steam production

from the boiler averaged 440,000 lb/h with a maximum production of 575,000 lb/h. About 130,000 lb/h of dry solids are transferred from the recovery boiler to a smelt dissolving tank to make green liquor.

The No. 2 natural-gas-fired lime kiln was processing 450 to 500 gal/min of lime mud into calcium oxide. Calcium oxide production was about 16 ton/h with a maximum of 18 ton/h. Emissions from the lime kiln are controlled by a venturi scrubber (Emission Point 1).

Smelt dissolving tanks process about 130,000 lb/h of recovery boiler solids into green liquor. Emissions from the smelt dissolving tank are controlled by two scrubbers that exit through individual stacks, Emissions Points 2S and 2N. Emissions from these sources are regulated under the Arkansas State Implementation Plan, New Source Performance Standards Subpart D and BB, and the Arkansas Air Code.

The No. 2 power boiler is subject to Subpart D, Section 60.42, Standards for Particulate Matter. The boiler is limited to emissions of 0.1 lb/million Btu; stack test results show 0.0727 lb/million Btu. Opacity is limited to 20 percent except for six-minute periods per hour of not more than 27 percent. Rainy and cloudy conditions on the inspection day prevented visible emission observations. Subpart D, Section 60.43, limits sulfur dioxide emissions to 1.2 lb/ million Btu of solid fossil fuel; stack test results show emissions of 0.2 lb/million Btu. Section 60.44 limits nitrogen oxides emissions to 0.70 lb/ million Btu; test results show emissions of 0.3 lb/million Btu. Since the nitrogen oxides emissions are less than 70 percent of the allowable, Nekoosa contends that it is exempt from operating the continuous emissions monitor, according to 40 CFR Paragraph 60.45(3). Mr. Matthews explained that Nekoosa requested EPA to exempt the company from monitoring nitrogen oxides emissions from the No. 2 power boiler.

Prevention of Significant Deterioration Permit PSD-AR-42 states that Nekoosa must comply with the Standards of Performance for Kraft Pulp Mills, 40 CFR Part 60, Subpart BB, for particulate matter emissions from the No. 2 recovery boiler, the No. 2 lime kiln, and the No. 2 dissolving tank vent. Stack tests must be conducted according to test methods and procedures specified in 40 CFR 60.285, Subpart BB. Section 60.282, Standards for Particulate Matter, limit recovery boiler emissions to 0.044 grains per dry standard cubic foot corrected to 8 percent oxygen. Stack tests conducted on the recovery boiler show 0.0062 grains per dry standard cubic foot particulate emissions. Smelt dissolving tank particulate emissions are limited to 0.2 lb/ton of black liquor solids; stack tests show 0.1951 lb/ton black liquor solids. Lime kiln emissions are limited to 0.067 grains per dry standard cubic foot corrected to 10 percent oxygen while burning natural gas; stack test results show 0.0306 grains per dry standard cubic foot. The company used Method 16 to test for total reduced sulfur (TRS) emissions from the recovery boiler, smelt dissolving tank, and lime kiln. Results show 2.76 ppm TRS from the recovery boiler; 0.0067 lb H_2S/ton liquor solids from the smelt dissolving tanks; and 6.8 ppm TRS from the lime kiln.

As mentioned earlier, I could not observe visible emissions because cloudy, rainy conditions caused elongated and comingling steam plumes.

Nekoosa uses two venturi scrubbers to control emissions from the No. 2 power boiler. The scrubbers emit through a common stack. During the inspection, each scrubber had a pressure drop around 18 in. and a flow rate of 1200 gal/min. of water. Scrubber effluent pH is not measured. The No. 2 recovery boiler emissions are controlled by a two-chamber Wheelabrator Frye wet bottom electrostatic precipitator. Each chamber has three fields. During the inspection the primary voltage in each field varied between 260 to 330 volts. One field had a reading of zero. The current varied between 100 and 320 amps with the same field having a reading of zero. With dust loading of 6 grains per dry standard cubic foot, efficiency is estimated at 99.67 percent. The smelt dissolving tank emissions are controlled by two scrubbers, one for each tank. During the inspection the scrubbers were operating at a pressure drop of 4 in. of water. The water flow rate and pH are not measured. No. 2 lime kiln emissions are controlled by an AirPol venturi scrubber. During the inspection the scrubber had a pressure drop of 20 to 21 in., and a water flow rate of 1800 gal/min.

The coal handling facility was inspected as part of a SIP inspection by Arkansas. Rail cars are unloaded through bottom opening hopper doors. Vibrators shake the rail cars during unloading. The coal in the receiving hoppers is conveyed to storage bins using a closed system drag chain, bucket elevator, and belt conveyors. The unloading area is equipped with electrically operated roll-up doors at each end of the shed and surfactant sprays to suppress dust while unloading the rail cars. During the inspection, the operator mentioned that the roll-up doors did not work and that he was not aware of dust suppression sprays. We observed emissions while the operator emptied some coal from one rail car. Although some dust emanated from around the rail car, no dust was emitted outside the shed during unloading. The area around the shed did not appear covered with coal dust. However, the operator said the coal was wet and that dry coal emits more dust.

Nekoosa operates reactors to make chlorine gas used for bleaching paper. Pressure relief valves release excess chlorine gas into the atmosphere. W. T. Westbrook, ADPCE, expressed concern about employee exposure to chlorine gas emissions. Nekoosa is experimenting with caustic scrubbers to alleviate chlorine gas emissions. During the inspection a yellow/green gas was emitted from the chlorine gas reactors.

While conducting the inspection, I completed Arkansas inspection checklists and a Region 6 checklist. The checklists are attached to this report in the Observation Summary. I also completed a file review, which is attached to this letter. Photographs taken during the inspection did not come out because of a camera malfunction.

If you have any questions, please call me.

Sincerely,

John P. Paul

JPP:swl

Attachments

cc: H. Lewis (2)

NSPS FILE REVIEW

NEKOOSA PAPERS, INC.
ASHDOWN, ARKANSAS
CDS 1460-9002 and 1460-00003/NSPS

On July 1, 1975, Nekoosa Paper received approval of Permit 287-A under the Arkansas Commission on Pollution Control and Ecology (ACPCE) for installing a coal-fired power boiler. The boiler was to burn 59,300 lb/h coal and produce 500,000 lb/h steam at 850 psi. On May 20, 1975, a public notice was filed concerning the boiler permit.

On April 29, 1976, ADPCE conducted an inspection of Nekoosa. The report states there were some visible emissions, but it was impossible to evaluate them.

On October 4, 1976, Nekoosa submitted coal-fired boiler information to EPA. According to information supplied in Nekoosa's letter of October 4, 1976, Nekoosa was required to test emissions from the boiler within 60 operating days. On October 27, 1976, EPA sent Nekoosa notification that the coal-fired boiler was subject to New Source Performance Standards (NSPS), Subpart D - Standards of Performance for Fossil Fuel-Fired Steam Generators.

On March 9, 1977, Nekoosa notified EPA that the Lear-Siegler RM-4 opacity meter was not functioning because of water droplets in the stack gas. The company proposed monitoring the pressure drop across both venturi scrubbers and the pressure on the nozzles to the venturi throats to show compliance with NSPS Subpart D.

On March 9, 1977, an EPA internal memo requested evaluating the alternative continuous monitoring system pursuant to 40 CFR 60.13(i)(1).

On May 18, 1977, Nekoosa Paper sent additional information to EPA for compliance test runs conducted in December 1976.

On June 14, 1977, Nekoosa Paper sent a first quarter report to EPA explaining that sulfur dioxide and nitrogen oxides emissions did not exceed NSPS.

On June 20, 1977, an EPA internal memo recommends that legal action be taken against Nekoosa for violation of 60.42 particulate standards, and 60.13 and 60.35 for failure to conduct proper continuous monitoring evaluations for sulfur dioxide, nitrogen oxides, and oxygen.

On July 25, 1977, Nekoosa Paper submitted a second quarter report showing that they failed to meet NSPS for particulate emissions; sulfur dioxide emissions were within the limits and the continuous monitoring was operating.

On June 29, 1977, EPA replied to Nekoosa's request for alternative monitoring programs. EPA would grant an alternative monitoring program if performance tests for particulate were conducted every six months and the liquid flow rate on the venturi scrubber was monitored and recorded continuously.

On July 28, 1977, EPA found that Nekoosa Paper's sulfur dioxide monitor passed the 2-hour and 24-hour calibration drift tests and the high range calibration. The accuracy test exceeded the allowable limit as did the mid-range calibration air test. Oxygen monitor tests and the required response time test were not conducted. 40 CFR 60.13 and 60.45 were violated. EPA explained they were considering issuing an NOV to the company for the violations.

On August 18, 1977, EPA notified Nekoosa about a meeting conference on September 14, 1977, to deal with the particulate violations of NSPS for the new coal-fired steam generator.

On October 10, 1977, Nekoosa notified EPA that third quarter emissions of sulfur dioxide and nitrogen oxides meet NSPS.

On December 1, 1977, Nekoosa notified EPA that particulate emissions from the coal-fired boiler were in compliance with NSPS; however, the sampling rate was not within the isokinetic allowance. Nitrogen oxides were 30 percent below the limit of 0.7 lb/million Btu.

On May 17, 1978, Nekoosa notified EPA that the semiannual compliance testing for particulates on the coal-fired boiler was scheduled for June 5, 1978.

On December 1, 1978, Nekoosa notified EPA that semiannual particulate compliance testing was rescheduled from December to January 22, 1979.

On January 15, 1979, compliance tests were postponed from January 22 to March 12, 1979, because of problems with the coal handling system.

On March 2, 1979, Nekoosa wrote EPA to confirm a March 19, 1979, date for semiannual compliance testing on the coal-fired boiler.

On August 20, 1979, Nekoosa informed EPA that compliance tests were scheduled for September 7, 1979.

On August 29, 1979, an EPA internal memo requested an observer for the performance tests at Nekoosa scheduled for September 17, 1979. Test methods to be observed were 1, 3, and 5, according to 40 CFR Part 60 Subpart D.

On September 11, 1979, Nekoosa informed EPA that the compliance tests scheduled for September 17 were rescheduled for the second week of October.

On March 12, 1980, Nekoosa informed EPA about the compliance tests that were scheduled for April 14, 1980.

On March 18, 1980, Nekoosa sent EPA a compliance test schedule for its PSD-AR-42 whereby the source shall comply with standards of performance for Kraft pulp mills 40 CFR Part 60 Subpart BB for particulate matter from the No. 2 recovery boiler, the lime kiln, and the No. 2 dissolving tank vent using test methods and procedures in 60.285 (proposed).

On March 25, 1980, Nekoosa sent EPA a revised schedule for compliance testing.

An EPA internal memo dated April 25, 1980, discusses a telephone conversation with Nekoosa regarding the deficiencies in the excess emissions report for the fourth quarter of 1979 caused by the lack of an oxygen monitor. A new monitor was installed on the boiler stack. EPA informed Nekoosa that the new oxygen monitor must be evaluated within 60 days.

On June 17, 1980, Nekoosa Paper sent EPA a schedule for compliance testing according to PSD-AR-42.

On July 17, 1980, Nekoosa sent EPA first quarter emissions report.

On July 24, 1980, EPA addressed Nekoosa's excessive emissions report describing the deficiencies in the report and giving Nekoosa 30 days to correct the deficiencies.

On October 8, 1980, Nekoosa informed EPA that compliance testing would be conducted during the week of November 11.

On August 21, 1980, EPA addressed Nekoosa's excessive emissions report, identifying the deficiencies in the report.

On August 27, 1980, Nekoosa sent EPA the results of performance testing on the No. 2 power boiler. Tests were conducted at 60 percent of full load. Nekoosa planned to test for nitrogen oxides emissions at full load. The test was tentatively scheduled for the week of November 4.

On October 8, 1980, PEDCo submitted a pretest meeting report to EPA explaining that nitrogen oxides tests would be conducted on the power boiler using bark chip fuel on November 4 while particulate is tested on November 10.

On October 8, 1980, Nekoosa sent EPA tentative compliance testing schedules for the week of November 11.

On January 6, 1981, Nekoosa informed EPA that a strike situation at the plant caused a void in the submission of air monitoring reports. A news release by Nekoosa Paper showed that union workers went on strike on January 5 and that the company non-union personnel began running the paper mill on a limited production basis.

On February 19, 1981, Nekoosa Paper submitted a fourth quarter emissions excess emissions report evaluation to EPA.

On April 3, 1981, EPA responded to an excess emissions report submitted by Nekoosa on March 2, 1981, for excess sulfur dioxide, particulate, and oxygen from the No. 2 recovery boiler.

On April 20, 1981, Nekoosa sent EPA a reschedule of compliance test from the week of April 20 to the week of May 4 because of repairs needed on the sampling equipment.

On April 21, 1981, Nekoosa Paper sent EPA a final report covering the semiannual compliance tests for particulates and performance tests for sulfur dioxide and nitrogen oxides. On May 5, 1981, EPA sent PEDCo performance test results for review and comment. On May 13, 1981, EPA sent Nekoosa an EPA Region 6 stack test report format for reporting test results.

On May 14, 1981, EPA sent Nekoosa a letter stating that Nekoosa was in violation because of testing, monitoring, and reporting requirements. Nekoosa had not conducted performance tests for total reduced sulfur emissions on the recovery boiler, lime kiln, and smelt dissolving vents and submitted a report of the results to the EPA within 180 days after initial startup. On May 22, 1981, Nekoosa sent EPA a schedule for testing the lime kiln, smelt dissolving tank, recovery boiler, and TRS emissions.

On May 29, 1981, Nekoosa sent EPA particulate and sulfur dioxide performance test reports for the recovery boiler No. 2 and smelt dissolving system No. 2 and the lime kiln.

On June 26, 1981, Nekoosa Paper informed EPA that repairs would be made on the No. 2 coal and bark-fired boiler and that a natural gas-fired package boiler would be installed and used in emergency conditions.

On July 24, 1981, Nekoosa sent ADPCE a letter about adding a new fifth digester under Permit No. 287-A.

On July 24, 1981, EPA sent Nekoosa a review of the excess emissions report of the emissions for the quarter ending March 31, 1981, for the No. 2 power boiler.

On September 17, 1981, EPA observer (Harmon Engineering) submitted an observer's test report for stack tests monitoring of TRS emissions from the smelt dissolving tank vents, according to NSPS Subpart BB, using Method 16A.

On August 6, 1981, ADPCE approved adding the fifth digester to Nekoosa's plant.

On August 7, 1981, Nekoosa sent EPA results of the No. 2 recovery boiler performance tests for sulfur dioxide and TRS emissions.

On August 18, 1981, Nekoosa sent EPA a letter discussing ADPCE's permit No. 287-A for the proposed fifth digester. Nekoosa explained the importance of having the fifth digester and how the production operations would be conducted during repair of the other four digesters.

On September 10, 1981, EPA sent Nekoosa comments on the results of the performance tests conducted on November 10 and 11, 1980, for the No. 2 power boiler where the nitrogen oxides emissions are greater than 70 percent of the allowable standard. Therefore, 40 CFR 60.45(b)(3) requires installation of continuous monitoring systems for nitrogen oxides and either oxygen or carbon dioxide. They were to be installed by November 11, 1981.

On September 21, 1981, EPA discussed conditions of operations under New Source Performance Standards with the fifth batch digester.

On August 28, 1981, Nekoosa sent EPA second quarter 1981 emissions report for the power boiler. Results showed nine periods of excess sulfur dioxide emissions.

On February 2, 1982, EPA sent Nekoosa Paper an evaluation of the results of the performance tests conducted on June 16-22, 1980, and additional information submitted September 9, 1981, for the No. 2 recovery boiler. The boiler was in compliance for the requirements of PSD-AR-198 and NSPS 40 CFR Part 60 Subpart BB.

On December 4, 1981, PEDCo reviewed a test report for opacity monitor certification.

On March 19, 1982, Nekoosa sent ADPCE a schedule for testing particulate emissions from the power boiler during the week of April 12.

On April 5, 1982, Nekoosa Paper sent ADPCE its reschedule of tests for the power boiler from April 12 to May 5.

On June 4, 1982, Nekoosa sent EPA notification that a natural gas-fired package boiler will be installed to pick up the load on the coal- and bark-fired power boiler as the bark-fired boiler is going to be shut down for about three weeks for repairs.

NEW SOURCE PERFORMANCE STANDARDS AND PREVENTION OF SIGNIFICANT DETERIORATION INSPECTION REPORT NEKOOSA PAPERS, INC. ASHDOWN, ARKANSAS

by

John P. Paul
PEDCo Environmental, Inc.
1006 N. Bowen Road
Arlington, Texas 76012

Contract No. 68-01-6310
Assignment No. 93
Project No. 3760-1-93

U.S. ENVIRONMENTAL PROTECTION AGENCY
DIVISION OF STATIONARY SOURCE ENFORCEMENT
JOHN R. BUSIK, PROJECT OFFICER
GEORGE V. MARUSAK, TASK MANAGER (REGION 6)

May 1983

John P. Paul

CONTENTS

		Page
I.	Introduction	1
II.	Activity Summary	1
III.	Process Description	1
IV.	Observation of Processes Arkansas Inspection Forms SIP Inspection Checklist Inspection Information Request	2

NEW SOURCE PERFORMANCE STANDARDS (NSPS)
AND PREVENTION OF SIGNIFICANT DETERIORATION (PSD)
INSPECTION REPORT
NEKOOSA PAPERS, INC.
ASHDOWN, ARKANSAS
CDS 1460 6002, NSPS 1460 9002, AND PSD-AR-042

I. INTRODUCTION

On April 5, 1983, John P. Paul, PEDCo Environmental, Inc., conducted a training inspection at Nekoosa Papers in Ashdown, Arkansas. The plant is located about one mile south of Ashdown, Arkansas, on U.S. Highway 71. Ray Taylor is the Vice President in charge of the plant; Bill Matthews is the Environmental Engineer in charge of environmental matters. I was accompanied on the inspection by Harold Lewis, Compliance Manager, Arkansas Department of Pollution Control and Ecology (ADPCE); and L. E. Cummings and W. T. Westbrook, field inspectors, ADPCE.

II. ACTIVITY SUMMARY

My inspection included the No. 2 power boiler, a combination coal/wood waste boiler subject to NSPS Subpart D; the No. 2 recovery boiler, the No. 2 lime kiln, and the smelt dissolving tank, all subject to NSPS Subpart BB and PSD-AR-042. These sources are also subject to the Arkansas State Implementation Plan and Arkansas Air Code Regulations. The inspection began about 8:30 a.m. and ended about 4:00 p.m.

III. PROCESS DESCRIPTION

The No. 2 power boiler burns up to 20 ton/h of wood waste and 25 ton/h of coal in various combinations to produce 500,000 lb/h steam. Emissions from the boiler are controlled by two venturi scrubbers that emit through a common stack (Emission Point 4). The high efficiency scrubbers are generally operated at 18 in. pressure drop and 1200 gal/min of water. Air flow through both scrubbers totals about 250,000 acfm.

The No. 2 recovery boiler processes about 440 gal/min of black liquor (60-65 percent solids) to produce 575,000 lb/h of steam at 940 psi. The boiler is a Combustion Engineering chemical and heat recovery unit. The

recovery boiler reclaims cooking salts (smelt) from black liquor and derives heat energy from burning the organic content of the liquor. Emissions from the unit are controlled by a two-chamber wet-bottom Wheelabrator Frye electrostatic precipitator with three fields in each chamber (Emission Point 3). The precipitator is rated at 99.67 percent efficiency at 6 grains dust loading per dry standard cubic foot. The precipitator operates at about 300 volts and between 100 and 200 amps primary current.

The No. 2 lime kiln processes 450 to 500 gal/min of lime mud into 18 ton/h calcium oxide (lime). Calcium oxide is fed to the smelt dissolving tanks, then the mixture is transferred to a slaker. The calcium oxide reacts with sodium carbonate to form sodium hydroxide and a calcium carbonate precipitate (lime mud). Lime mud is recycled through the kiln and back into the process. The kiln burns natural gas above 1500°F to dissociate carbon dioxide from the calcium carbonate lime mud. Emissions from the kiln are controlled by an AirPol high efficiency venturi scrubber (Emission Point 1). The scrubber normally operates at a pressure drop of 20 to 21 in. H_2O and 1800 gal/min water.

Molten smelt from the recovery boiler is dissolved in water at a controlled strength in the smelt dissolving tanks. Molten smelt is discharged from the furnace through six smelt spouts. Three spouts discharge into the north dissolving tank and three into the south dissolving tank. The dissolved smelt is called green liquor. The smelt system dissolves about 130,000 lb/h dry solids in water. Emissions from each tank are controlled by an AirPol venturi scrubber. Weak wash, from the lime mud wash overflow, is pumped countercurrent to the air flow through the scrubber to remove particulate from smelt tank exhaust gases. Each scrubber emits through an individual stack (Emission Points 2S and 2N).

IV. OBSERVATION OF PROCESSES

Production rate at the time of the inspection was 1,200 air-dried tons of pulp per day (ADTPD). The maximum design capacity is 1,335 ADTPD. During the inspection the No. 2 power boiler (Emission Point 4) was burning 18.5 ton/h of coal. Mechanical problems prevented burning wood waste at the time. No. 2 power boiler scrubber 1 was operating at a differential pressure of 18 in. of

water, 2,097 gal/min flow rate, and pH 10. The flow meter at the entrance to the venturi on Scrubber 2 was broken at the time; however, the company estimated the flow rate at 1000 gal/min plus 785 gal/min to the throat of the venturi, totaling 1,785 gal/min. Differential pressure drop was 18 in. H_2O and the pH was 7.

The No. 2 recovery boiler was processing 440 gal/min of black liquor, producing 130,000 lb/h dry solids, and 440,000 lb/h steam at 940 psi. According to Bill Matthews, the No. 2 recovery boiler operated above normal because the No. 1 recovery boiler was down for maintenance. One chamber of the electrostatic precipitator operated between 260 and 300 volts, and 200 to 320 amps. The other chamber operated between 320 and 330 volts, and 100 to 220 amps. One field in the chamber showed zero voltage and zero amps, indicating the field was not operating at the time of the inspection. The spark rate is not measured; however, rapping occurred at five-minute intervals in each chamber field. The transmissometer on the recovery boiler stack showed 10 percent opacity during the inspection. However, due to cloudy, rainy conditions, no visible emission readings were taken of the sources.

The lime kiln processed 450 gal/min of lime mud and produced 16 ton/h of calcium oxide. The lime kiln scrubber operated at a pressure drop of 20 to 21 in. H_2O and 1800 gal/min water flow rate; the scrubber water pH is not measured.

The smelt tanks dissolved 130,000 lb/h of dry solids into green liquor. Each of the scrubbers on the dissolving tanks operated at a pressure drop of 4 in. H_2O. Scrubber flow rates and pH are not measured.

The coal handling facility was inspected as part of a SIP inspection by Arkansas. Rail cars are unloaded through bottom opening hopper doors. Vibrators shake the rail cars during unloading. The coal in the receiving hoppers is conveyed to storage bins using a closed system drag chain, bucket elevator, and belt conveyors. The unloading area is equipped with electrically operated roll-up doors at each end of the shed and surfactant sprays to suppress dust while unloading the rail cars. During the inspection, the operator mentioned that the roll-up doors did not work and that he was not aware of dust suppression sprays. We observed emissions while the operator emptied some coal from one rail car. Although some dust emanated from around the rail car, no dust was emitted outside the shed during unloading. The area around the shed did

not appear covered with coal dust. However, the operator said the coal was wet and that dry coal emits more dust.

Nekoosa operates reactors to make chlorine gas used for bleaching paper. Pressure relief valves release excess chlorine gas into the atmosphere. W. T. Westbrook, ADPCE, expressed concern about employee exposure to chlorine gas emissions. Nekoosa is experimenting with caustic scrubbers to alleviate chlorine gas emissions. During the inspection a yellow/green gas was emitted from the chlorine gas reactors.

PRE INSPECTION CHECKLIST

NSPS Application Subpart(s) D and BB
SIP Permit Number(s) _____

PSD Permit Number(s) PSD-AR-42

Nekoosa Papers, Inc.
Company Name

CSN 4100002

Is source required to keep records? X YES ____ NO
If so what record?
CEM monitor

Which of the following sections of the inspection form is applicable for the facility you are going to inspect:

[X] Continuous Emissions Monitors
[X] Fossil-Fuel-Fired Boiler
[ ] Coal Preparation Plant
[ ] Asphalt Plant
[ ] Incinerator
[ ] VOC Storage
[X] Kraft Pulp Mill
[ ] Other _____

What sources or emission points at the facility are subject to NSPS?
No. 2 power boiler
No. 2 recovery boiler
Dissolving tanks
No. 2 lime kiln

What sources or emission points are subject to PSD?
No. 2 recovery boiler (ESP)
Dissolving tank scrubber (2)
Lime kiln (scrubber)

What sources or emission points are subject to SIP?

What sources or emission points are subject to NESHAPs?

Arkansas Air Inspection Form

General Information

Date of Inspection April 5, 1983

Time In: 8:30 a.m. Time Out: 4:00 p.m.

Company Name Nekoosa Papers, Inc. CSN

Address U.S. Highway 71

City or Town Ashdown, AR County Little River

Mailing Address P.O. Box 496

Ashdown, AR 71822

Type of Industry Kraft pulp mill and paper manufacturing

Type of Inspection (circle): SIP, NSPS, PSD, Complaint, NESHAP

NSPS Applicable Subpart D and BB

Company Personnel	Name	Title	Phone
Responsible for Facility	Ray Taylor	Vice President-Southern Div.	(501) 898-2711
Responsible for Environmental Matters	Bill Matthews	Environmental Engineer	(501) 898-2711
Company Personnel Contacted	Bill Matthews	Environmental Engineer	(501) 898-2711

Normal Operation Schedule:

24 hrs./day 7 days/wk. 52 wks./yrs.

Production Rate at Time of Inspection: 1200 ADTPD

Maximum Design Capacity: 1335 ADTPD

INSPECTOR'S SUMMARY

Comments and Recommendations:

Pulp production 1,222 ADTPD

Paper production 1,427 ADTPD

Coal burning only in power boiler at 12:30. Coal feed rate ≃ 37,000 lb/h.

Maximum bark feed ≃ 20 ton/h.

Maximum coal feed ≃ 22-25 ton/h.

Smelt dissolving tank

11.5 lb/gal density

7.25 lb solids/gal of liquor

440 gpm is higher than normal because No. 1 recovery boiler was down for maintenance at the time of the inspection.

Compliance Status (Write In, Out, Unk., N/A): _____ Air Code, _____ SIP, _____ NSPS

_____ PSD, _____ NESHAP

Next Inspection Date: _____

Inspector's Signature _____

PRE INSPECTION CHECKLIST

NSPS Application Subpart(s) D and BB

SIP Permit Number(s) _____

PSD Permit Number(s) PSD-AR-42

Nekoosa Papers, Inc.
Company Name

CSN 4100002

Is source required to keep records? X YES _____ NO
If so what record?
CEM monitor

Which of the following sections of the inspection form is applicable for the facility you are going to inspect:

[X] Continuous Emissions Monitors
[X] Fossil-Fuel-Fired Boiler
[ ] Coal Preparation Plant
[ ] Asphalt Plant
[ ] Incinerator
[ ] VOC Storage
[X] Kraft Pulp Mill
[ ] Other _____

What sources or emission points at the facility are subject to NSPS?
No. 2 power boiler
No. 2 recovery boiler
Dissolving tanks
No. 2 lime kiln

What sources or emission points are subject to PSD?
No. 2 recovery boiler (ESP)
Dissolving tank scrubber (2)
Lime kiln (scrubber)

What sources or emission points are subject to SIP?

What sources or emission points are subject to NESHAPs?

CONTROL EQUIPMENT INFORMATION

EMISSION POINT	TYPE OF CONTROL EQUIPMENT	PRESSURE DROP (A)	WATER FLOW RATE (B) GAL/MIN	AIR FLOW Ft^3/ MIN (C)
No. 2 power boiler (4)	Scrubbers	(12' stack) 18" 18"	 1200 1200	250,000 acfm
No. 2 recovery boiler (3S, 3N)	ESP			292,000
Dissolving tanks 2S 2N	 Scrubber Scrubber	 4" 4"	Flow meters are broken	35,750
No. 2 lime kiln (1)	Scrubber	20"-21"	1800	39,761

FOOTNOTES: (1) CYCLONE (A) (C)
(2) BAGHOUSE (A) (C)
(3) SCRUBBERS (A) (B) (C)
(4) WATER SPRAY (B)
(5) ESP (C)
(6) OTHER

ARE THERE ANY UNCONTROLLED SOURCES LOCATED AT THE FACILITY? _____ YES __X__ NO

IF YES, LIST THEM. _____ _____ _____

_____ _____ _____

_____ _____ _____

Notes: Coal sulfur content = 2 to 3 percent.

Recovery Boiler ESP:

North Precipitator Primary Current	South Precipitator Primary Current
Amps 0/100/220	320/200/270
Volts 0/320/330	330/268/260
Secondary	Secondary
Milliamps 0/500/950	1500/850/1450
KV 0/ 70/ 62	50/ 50/ 40

Rapping - every 15 minutes.

11:00 Opacity 10%.

Recovery boiler

Operating 440 gpm, 67% solids

Producing steam 440,000 lb/h, 830°F, 940 psi

No. 2 power boiler - 124°F, 7.1% O_2, 41 ppm SO_2, 0.1 SO_2 lb/10^{6} Btu

Recovery boiler:

Scrubber 1	Scrubber 2
Flow (gpm) 2,097	1,785
Differential pressure 18	18 (in. of H_2O)
pH 10.4	7.0

Maintenance of Control Equipment:

(1) Does facility maintain a maintenance program for control equipment?

X yes ____ no

(2) How often is control equipment checked and by whom? Daily by operators and technical services

(3) Are records kept on maintenance of control equipment? X yes ____ no

(If yes, ask to see records)

Upsets

Have there been any upsets within the last 3 months which caused emissions above the allowable limits or odors to escape into the ambient air? yes X no ____ Was upset reported to Agency? X yes ____ no

Have there been any changes or modifications in plant's process or operation since the last air inspection?

____ yes X no If yes, list date and type of change.

Boiler Information

EMISSION POINT	Fuel Used	% Sulfur	% Ash	% Moisture	Design Capacity BTU/HR Input	Design Capacity or LBS/HR Steam
Power boiler	Coal/ wood waste	2-3% --	20% 2-5%	5-6% 40%	5.8247×10^8 Btu/h	400,000 to 500,000
Recovery boiler	Black liquor	Black liquor at 67% solids				440,000 lb/h

TABLE #1
CONTINUOUS EMISSION MONITOR INFORMATION

STACK I.D.	No. 2 Recovery Boiler	No. 2 Power Boiler			
Parameter Monitored	Opacity	SO_2			
Monitor Manuf.	Lear Seigler	DuPont			
Model No.	Type RM41-32 No. 1321	460-1			
Reading At Time of Insp.	10%	41 ppm			
Date Last Calibrated	Daily	Daily			

OPACITY _____%

COAL STORAGE

TYPE: SILO ___ PILE X FABRICATED BIN X

STORAGE DESIGN FEED RATE 800 TON/~~HR~~ Day

TYPE OF COAL STORED: RAW ___ WASHED X

DESCRIBE FUGITIVE EMISSION _____

NOTES: Coal sulfur contents running between 2% and 3%.

CONTINUOUS EMISSION MONITORS

(1) MONITOR(S) LOCATION: ON STACK X IN DUCT ____

(2) ARE MONITORS ZEROED DAILY? YES X NO ____

(3) ARE MONITORS CALIBRATED DAILY? YES X NO ____

(4) WHAT TIME OF DAY ARE MONITORS CALIBRATED AND ZEROED? Day shift

GENERAL QUESTIONS ON CEM'S

(1) ARE LOGBOOKS BEING KEPT ON THE FOLLOWING?
MALFUNCTIONS & REPAIRS ON POLLUTION CONTROL DEVICES Yes
MALFUNCTION & REPAIRS ON CEM'S Yes
SPAN CHECKS ADJUSTMENT'S Yes
ZERO CHECK ADJUSTMENT'S Yes
STARTUPS & SHUTDOWNS Yes

(2) ARE STRIP CHARTS IDENTIFIED/LABELED & STORED X YES ____ NO

(3) IS STORED DATA ACCESSED/RETRIEVED EASILY? X YES ____ NO

(4) ARE SPARE PARTS MAINTAINED FOR MONITORS X YES ____ NO

(5) DOES FACILITY HAVE PREVENTATIVE MAINTENANCE PROGRAM X YES ____ NO

(6) HOW OFTEN IN PREVENTATIVE MAINTENANCE PERFORMED? Daily

(7) AT THE TIME OF THE INSPECTION WERE THE MONITOR(S) OPERATING? X YES ____ NO

IF NO, LIST WHAT MONITORS WERE DOWN, AND THE REASON WHY, AND WHAT PART OF THE MONITORING SYSTEM WAS DOWN (EXAMPLE ANALYZER, DATA READER, SAMPLING INTERFACE) AND DURATION OF DOWNTIME.

NOTES ON CEMS:
Monitored on strip chart and information on computer.

Kraft Pulp Mills

Type of wood used: Softwood X Hardwood X
Sulfidity - 20%-25%
Sulfide content of white liquor _____

Pulping Capacity 1,335 ADTPD

Recovery Boiler or Furnace

Black liquor firing rate 300-400 gpm

Percent solids of black liquor 60-65 %

Percent excess air: 2-5% O_2 %

Percent secondary air _____ %

Lime kiln

Type fuel used: Oil _____ Gas X

Fuel Consumption: Oil _____ gal/hr.

Gas 135,000 cf/hr.

Production Rate 17 ton/hr.

Kiln Temperature 500 °F

Raw Material Feed Rate Lime Mud 450-500 gpm ~~xxx/hr~~. 16 to 17 ton/h CaO

Sodium content of washed cake 0.1

Make-up rate for salt cake (lbs./salt cake added per ton pulp produced)
115 lb/ton

Notes: _____

EPA REGION VI

SIP INSPECTION CHECKLIST

AQCR 022

Date(s) of Inspection April 5, 1983

Time In 8:30 Out 4:00

Company Name Nekoosa Papers, Inc.

Mailing Address P.O. Box 496
Ashdown, AR 71822

Location of Facility 1 mile south of Ashdown, AR, on U.S. Highway 71 in Little River County
(Include County or Parish)

Type of Industry Kraft pulp mill and paper manufacturing

Form of Ownership

Corporate Address

Company Personnel	Name	Title	Phone
Responsible for Facility	Ray Taylor	Vice President - Southern Division	(501) 898-2711
Responsible for Environmental Matters	Bill Matthews	Environmental Engineer	(501) 898-2711
Company Personnel Contacted	Bill Matthews	Environmental Engineer	(501) 898-2711
Confidentiality Statement given to	Bill Matthews	Environmental Engineer	(501) 898-2711
EPA Personnel	J. P. Paul	PEDCo Environmental	(817) 460-0777
State or Local Agency Personnel	L. E. Cummings	ADPCE	(501) 525-1271
	Harold Lewis	ADPCE	(501) 562-7444
	W. T. Westbrook	ADPCE	(501) 744-1266

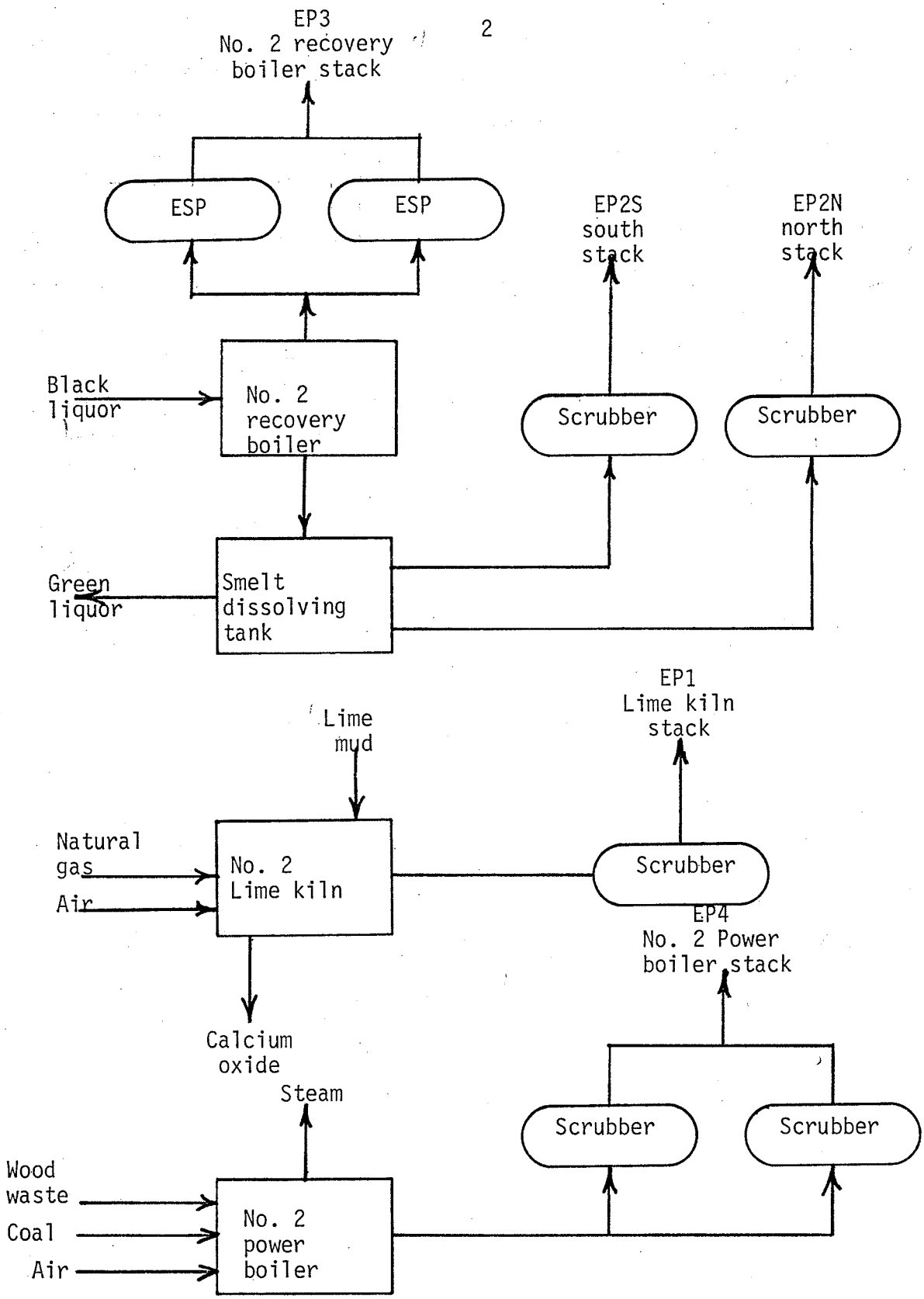

Description of process (using simple process flow diagrams with emission points):

PRODUCTION INFORMATION

Process/Unit	Process Input Rate	Product	Production Rate			Emission Point (including fugitive emissions)	Status of Process at Time of Inspection
			Design	Actual			
				Ave.	Max.		
No. 2 power boiler	20 ton/h wood waste; 25 ton/h coal	Steam	500,000 lb/h	400,000 lb/h	500,000 lb/h	4	18.5 ton/h coal
No. 2 recovery boiler	440 gpm black liquor (67% solids)	Dry solids and 940 psi steam	575,000 lb/h steam	440,000 lb/h steam	575,000 lb/h steam	3S, 3N (2 stacks)	440 gpm black liquor
No. 2 lime boiler	450 to 500 gpm lime mud	Calcium oxide	18 ton/h	16 ton/h	18 ton/h	1	16 ton/h calcium oxide
Smelt dissolving tank	130,000 lb/h dry solids (from recovery boiler)	Green liquor	Not available	Not available	Not available	2S, 2N (2 stacks)	130,000 lb/h dry solids

*EMISSION POINT INFORMATION

Emission Point	Process/Unit Description	Stack Data				Emission Rate				
		Ht. (ft)	Dia. (ft)	Flow Rate (acfm)	Exit Temp. (°F)	Part. (lb/h)	SO_2 (lb/h)	HC (lb/h)	TRS	NO (lb/10^6 Btu
4	No. 2 power boiler	235	12	251.860	135	62 0.0727 lb/10^6 Btu	680 0.2 lb/ 10^6 Btu	221		0.3
3	No. 2 recovery boiler	295	10	292,170	270	7.0 0.0062 gr/dscf	180		2.76 ppm	
2S	Dissolving tank	295	4.25(	35,750	180	14.0	2.2		0.0067 ***	
2N	Dissolving tank	295	4.25(			0.1951**				
1	Lime kiln No. 2	100	7.5	39,761	166	7.2 0.0306 gr/dscf	0.0		6.8 ppm	

*Attach Record of Visual Determination of Opacity for each visible emission.
**Pound per ton of black liquor solids.
***Pound of hydrogen sulfide per ton of liquor solids.

ABATEMENT EQUIPMENT INFORMATION

Emission Point	Type	PARAMETERS (Fill in applicable data)*						
		Pressure Drop (inches water)(a)	GPM water(b)	ACFM (c)	Voltage (d)	Amps (e)	Spark Rate (f)	pH (g)
No. 2 power boiler, 4 (Common stack)	Scrubber 1 Scrubber 2	18 18	1,200(1,200(	250,000	-	-	-	10.4 7.0
3S, No. 2 recovery boiler	ESP (south)	-	-	292,170	300 260 260	320 200 270	Not measured	-
3N, No. 2 recovery boiler	ESP (north)	-	-		0 320 330	0 100 220	Not measured	-
2S, Smelt dissolving tank	Scrubber	4	Flow meter not working	35,750	-	-	-	Not measured
2N, smelt dissolving tank	Scrubber	4	Flow meter not working		-	-	-	Not measured
1, No. 2 lime kiln	Scrubber	20-21	1,800	39,761	-	-	-	Not measured

*Parameters required for various devices:

(1) Cyclone - (a)(c)
(2) Fabric filter - (a)(c)
(3) Scrubbers - (a)(b)(c)(g)
(4) ESP - (c)(d)(e)(f)
(5) Others
Gravity Chambers - (a)(c)
Thermal Reaction - Operating Temperature, Residence time
Chemical Reaction - Solution concentration and flow rate

This checklist should be filled out only for hydrocarbons with vapor pressures greater than 1.5 psia at storage conditions.

STORAGE

Tank No.	Capacity (units)	Type (1)	Product Stored	Vapor Pressure (units) @ Max. Storage Temp	Maximum Storage Temp.	Vapor (2) Controls	Remarks*
			NOT APPLICABLE				

Footnotes:

(1) C = fixed roof; F = floating roof; p = pressure; O - open top; S = spheroid; H = horizontal; U = underground

(2) N = None, CV = conservation vents; F = floating roof (SS = single seal; DS = double seal); VR = Vapor recovery (describe); VD = vapor disposal (describe); VB = vapor balance; SF = submerged fill.

* Date installed, etc.

VOLATILE HYDROCARBON LOADING/UNLOADING FACILITIES

Loading Facility Designation	Source	Type Transfer/Size (RR Cars, Trucks)	Monthly Thru-put (1000 Gal)	Type Vapor Control System	Submerged Loading	Products	
						Type	Vapor Pressure (psia)
			NOT APPLICABLE				

STATIONARY GASOLINE STORAGE CONTAINER(S)

Emission Point	Container Size	Date Installed	Submerged Fill Line	Type Roof	Vapor Recovery System Type
		NOT APPLICABLE			

WATER SEPARATOR

Emission Point	Volatile Hydrocarbons		Amount Volatile Hydrocarbon Entering/day	Type Vapor Control
	Type Separated	Vapor Pressure (psia)		
		NOT APPLICABLE		

ORGANIC SOLVENT EMISSIONS

Types of Operation NOT APPLICABLE

Max. Amount Emitted Per Hour: _____/Hr_____
Method Used To Determine _____
Max. Amount Emitted Per Day: _____/Day_____
Method Used To Determine: _____

Controls On Emissions: _____

FIELD OBSERVATIONS SUMMARY

Emission Point	Opacity Reading	Time		Comments (Instantaneous Reading, 6 min. Reading, etc.)
		Start	End	
				Cloudy, rainy conditions, elongated steam plumes, and comingling plumes prevented reading visible emissions.

INSPECTION INFORMATION REQUEST

Company Name: Nekoosa Papers, Inc.

Location: Ashdown, Arkansas

Source Number(s): 1460 60002/PSD-AR-042 1460 90002/NSPS

Type Inspection: PSD/NSPS

Enforcement Engineer: Janis Foreland

314-767-9857

- For all items checked below, please obtain information and include it in your report.
- Identify any facilities which you consider subject to NSPS, but which are not currently listed in CDS.
- Attach this request to your report.

I. ADMINISTRATIVE INFORMATION

A. Company Identification

- [x] Mailing Address
- [x] Location
- [x] Company Environmental Contact
  - [x] Name
  - [x] Phone Number
- [x] Plant Manager
  - [x] Name
  - [x] Phone Number
- [x] Chief Corporate Officer
  - [x] Name
  - [x] Address

B. Procedural Information
PSD/NSPS Point(s) N/A

- [ ] Commence Construction Date
- [ ] Start-Up Date
- [ ] Performance Test Date

B. Process Data
PSD/NSPS Point(s) Recovery & Power boiler, Kiln

- [x] Operating at time of inspection? Capacity?
- [x] Feed Rate of raw material
- [x] Production Rate
- [x] Fuel Used
  - [x] % Sulfur
  - [x] % Ash
  - [x] Heating Value
- [x] % Excess Air or % O_2 in Flue Gas
- [x] Oxygen Flue Gas Monitor Reading

C. VE Observation
PSD/NSPS Point(s) All points

- [x] 30 Consecutive Minutes, if a violation is occuring.
- [x] 18 Minutes *
- [ ] 06 Minutes

D. Work Practices N/A

- [ ] Is watering done and how often?
- [ ] Chemical/Crusting agent applied? Frequency?
- [ ] Other (Identify)
- [ ] Do you consider the work practice adequate?

E. Storage Tank Data
PSD/NSPS Point(s) N/A

- [ ] Control Method (Circle Appropriate Method)

Single Seal Double Seal

Internal Floating Roof External Floating Roof

Vapory Recovery

*Read opacity for 18 minutes if observation is for initial compliance determination, or if observation is during a performance test (6 minutes per run).

C. CEM Information
PSD/NSPS Point(s) #2 Power boiler, #2 Recovery boiler, Dissolving tank, Lime Kiln

- [x] Is CEM Installed? Power and Recovery boilers
- [x] CEM Location (Include Diagram) Stack
- [x] Type of Monitor Power Boiler - Opacity, Recovery
- [x] Manufacturer
- [x] Model Number
- [x] Performance Evaluation Date
- [x] Date CEM last Calibrated
- [x] Monitoring Data Retained (2 years)?

D. Equipment/Facility Identification Number
PSD/NSPS Point(s) #2 Power, #2 Recovery

- [ ] Tank No(s).
- [x] Boilers
- [ ] Heaters
- [ ] SRU
- [x] Furnaces Lime Kiln
- [ ] FCCU
- [ ] Flares
- [x] Other (identify) Dissolving tank

II. TECHNICAL DATA

A. Control Equipment Parameters
PSD/NSPS Point(s) _____

Kiln + Dissolving tank + No. 2 Power boiler
- [x] Scrubber - Type, Pressure Drop, Liquid Flow Rate, Liquid Inlet Supply Pressure, Gas Flow Rate, Gas Velocity, General Equipment Condition.
- [ ] Baghouse - Pressure Drop, Air/Cloth Ratio, Fabric Area, Number Bags, Bag Material, Gas Temperature, Filtering Velocity, Cleaning Method, General Equipment Condition.

Recovery boiler
- [x] ESP - Voltage, Amps, Spark Rate, Gas Flow Rate, General Equipment Condition.
- [ ] Afterburner/Flare - Combustion Temperature, Residence Time, Steam Injection, General Equipment Condition.
- [ ] Adsorption/Absorption - Type, General Equipment Condition.

- [ ] Gap Measurements Done (External Floater Only)?
- [ ] Tank Capacity
- [ ] Material Stored - Type, Vapor Pressure, Storage Temperature.

F. Fugitive Emission N/A

- [ ] VOC Leak Check
  - [ ] Pumps
  - [ ] Compressors
  - [ ] Valves
  - [ ] Seals
  - [ ] Flanges
- [ ] O & M Program Established?
  - [ ] Particulates
  - [ ] VOC
- [ ] VE Observation (Particulates)

UNITED STATES ENVIRONMENTAL PROTECTION AGENCY
FIRST INTERNATIONAL BUILDING
1201 ELM STREET
DALLAS, TEXAS 75270

CERTIFIED MAIL: RETURN RECEIPT REQUESTED #317045

February 17, 1978

Mr. Philip R. Campbell
Corporate Supervisor of
Environmetnal Protection
Nekoosa Papers, Inc.
100 Wisconsin River Drive
Port Edwards, Wisconsin 54469

Dear Mr. Campbell:

A review of your application for authority to expand the Ashdown Mill at Ashdown, Arkansas, as specified in your Significant Deterioration Review, Application Number PSD-AR-42, dated November 14, 1977, has been completed by the Environmental Protection Agency (EPA). A determination has been made to approve your project. Our final determination indicates that you have met the requirements of the prevention of significant deterioration regulations of 40 CFR 52.21, as amended by the Clean Air Act Amendments of 1977, that is, the operation of your proposed project at the location specified, (1) will not cause a violation of the Class II air quality deterioration increments, (2) will not cause a violation of the National Ambient Air Quality Standards, (3) will not have an impact on the air quality of any mandatory Class I areas, and (4) will use best available control technology to control emissions of sulfur dioxide (SO2) and particulate matter (TSP).

A violation of any condition issued as part of this approval as well as any construction which proceeds at variance with information submitted in the application is regarded as a violation of construction authority and is subject to enforcement action. Also, before you start construction you must meet, if applicable, all other Federal EPA requirements such as the 40 CFR part 60 (New Source Performance Standards), the National Pollutant Discharge Elimination System (NPDES), and the National Environmental Policy Act (NEPA). Commencement of construction prior to the completion of the NEPA process may result in enforcement action pursuant to Section 6.906 of 40 CFR Part 6, Preparation of Environmental Impact Statement. Furthermore, it must be pointed out that issuance of your prevention of significant deterioration certification does not free you of the responsibility to comply with other air pollution control strategies and all local, State, and Federal regulations which are part of the Arkansas State Implementation Plan.

This approval is issued in accordance with the following conditions:

1. The source will be constructed in accordance with the application and supportive facts submitted for EPA review.

2. The source shall comply with the Standards of Performance for Kraft Pulp Mills (40 CFR Part 60, Subpart BB) for particulate matter (TSP) emissions from the #2 Recovery Boiler, the Lime Kiln and the #2 Dissolving Tank Vent along with the applicable test methods and procedures specified in 40 CFR 60.285 (proposed).

3. The maximum sulfur dioxide (SO_2) emission rates for the Lime Kiln and the #2 Dissolving Tank Vent (stacks 1 and 2 combined) shall be 16.7 lbs/hr and 10.4 lbs/hr, respectively. Compliance with the required emission limitations shall be determined by EPA Reference Method 6, and the following test procedures shall be followed:

   (a) The sampling point in the duct shall be at the centroid of the cross section or at a point no closer to the walls than 3.28 feet (1 meter).

   (b) The samples shall be extracted at a constant rate of approximately 0.035 cubic feet/minute (1 liter/minute).

   (c) The minimum sampling time shall be 20 minutes, and the minimum sampling volume shall be (0.02 dscm) 0.71 dry standard cubic feet (dscf) for each sample.

   (d) The arithmetic mean of two samples shall constitute one run. Two samples shall constitute one run. Samples shall be taken at approximately 30-minute intervals.

   (e) Emission rate shall be the arithmetic mean of results of three (3) test runs.

4. The #2 Recovery Boiler shall meet an SO_2 emission limitation of 250 parts per million. Compliance with the required emission limitation shall be determined by EPA Reference Method 6 and the test procedures specified in item 3a thru 3e above with the exception that item 3e is amended as follows:

   (e) Emission rate shall be the arithmetic mean of results of three (3) test runs with an interval of at least six hours between runs.

5. Approval under the prevention of significant deterioration requirements shall take effect on the date of this notice. In accordance with the proposed prevention of significant deterioration rules which appeared in the Federal Register of December 8, 1977, construction must commence before December 1, 1978. If construction is not commenced by December 1, 1978, (where the term "commenced" is defined under 40 CFR 52.21(b)(7) as promulgated in the Federal Register on November 3, 1977), then this approval shall become invalid, and it will be necessary to resubmit an application under the new prevention of significant deterioration regulations which are expected to be promulgated on March 1, 1978.

The complete analysis including public comments, which justifies this approval, has been fully documented by the EPA Regional Office for future reference, if necessary. Any questions concerning this approval may be directed to Oscar Cabra by phone at (214) 767-2742 or by letter to this office.

Sincerely,

Myron O. Knudson

Adlene Harrison
for Regional Administrator

cc: John M. Mitchell, Chief
Air Pollution Control Division

DEPARTMENT OF POLLUTION CONTROL AND ECOLOGY
DIVISION OF AIR POLLUTION CONTROL

SUMMARY REPORT RELATIVE TO PERMIT APPLICATION

SUBMITTED BY: Nekoosa Papers Inc.

Ashdown

CSN: 410002

FIRST SUBMITTAL: 12/10/74 AMENDED: 01/04/78, 05/24/78

CASE REFERENCES:

SUMMARY:

Nekoosa Papers Inc. at Ashdown was issued Permit No. 287-A(Modification) on March 24, 1978, for the expansion of pulping capacity from 735 to 1300 tons per day of air dried pulp. The EPA in its PSD review determined that the proposed recovery boiler stack height of 295 feet would be inadequate to insure that the air flow over the boiler building would not interfere with the release from the stack. Consequently, Nekoosa submitted calculations to the EPA which included the building effects and gave higher predicted contributions.

In the review conducted by the Department, it was determined that a stack height of 336 feet would not require downwash calculations, and the permit was issued reflecting a height of 336 feet. However, Nekoosa has re-evaluated the two stack heights, and based upon the increased cost versus the benefits, Nekoosa has requested a modification of the permit to allow a stack height of 295 feet. Since the expansion with the shorter stack will only use 5 percent of the PSD increment, this permit modification is acceptable.

Qualification: All previous qualifications attached to Permit No. 287-A remain in effect.

ESTIMATED COST: TOTAL PROJECT:

COMMENCEMENT OF INSTALLATION: April, 1978

COMMENCEMENT OF OPERATION: December, 1979

REVIEWED BY: CDH APPROVED BY: JAM

RECOMMENDATION: APPROVAL WITH QUALIFICATION

ASSIGNED PERMIT NUMBER: 287-A(MODIFICATION)

COMMISSION MINUTE ORDER NUMBER:

DEPARTMENT OF POLLUTION CONTROL AND ECOLOGY
DIVISION OF AIR POLLUTION CONTROL

SUMMARY REPORT RELATIVE TO PERMIT APPLICATION

SUBMITTED BY: Nekoosa Papers Inc.

Ashdown

CSN: 410002

FIRST SUBMITTAL: 12/10/74 AMENDED: 01/04/78

CASE REFERENCES:

SUMMARY:

Nekoosa Papers Inc. of Ashdown proposes to expand pulping capacity at the Ashdown Mill by 735 air dry tons per day (ADTPD) to a total of 1300 ADTPD of bleached kraft pulp.

New facilities which require air pollution control equipment are as follows:

(1) No. 2 recovery boiler. Peak process weight rate is 3,500,000 pounds per day, pulp production equivalent is 1094 ADTPD. Particulate emissions will be controlled by a high efficiency electrostatic precipitator to 84.4 pounds per hour. Predicted SO_2 emission rate is 445 pounds per hour. Total reduced sulfur (TRS) emissions will be controlled by black liquor oxidation to the proposed New Source Performance Standard (NSPS) of 5 parts per million (ppm). The stack height of 336 feet will prevent downwash.

(2) New lime kiln. Process weight rate of 440 tons per day of product is equivalent to a pulp production rate of 1600 ADTPD. Emissions will be controlled by a Venturi scrubber to 51 pounds per hour of particulates, 16.7 pounds per hour of SO_2. The installation of the new lime kiln will allow the existing lime kiln to be shut down. Total reduced sulfur emissions will meet the proposed NSPS of 5 ppm.

(3) No. 2 smelt dissolving tank. Discharge will be through 2 vents at a height of 295 feet. Emissions will be controlled by a low energy scrubber to 7.3 pounds per hour of particulates and 5.2 pounds per hour of SO_2 per stack; TRS emissions will meet the proposed NSPS of 0.50 pounds per ton air dry pulp (TADP). See Attachment.

ESTIMATED COST: $10,000,000 TOTAL PROJECT: $245,000,000

COMMENCEMENT OF INSTALLATION: April, 1978

COMMENCEMENT OF OPERATION: December, 1979

REVIEWED BY: IHB, STC APPROVED BY: JAM

RECOMMENDATION: APPROVAL WITH QUALIFICATION

ASSIGNED PERMIT NUMBER: 287-A(MODIFICATION)

(4) New continuous digester, continuous diffuser washing system, and multiple effect evaporator. TRS emissions will be controlled by incineration in the lime kiln.

Dispersion modeling has predicted compliance with the Arkansas Air Pollution Control Code standards for SO_2 and total suspended particulates (TSP). Modeling of the new sources for comparison with Prevention of Significant Deterioration (PSD) increments for Class II areas has shown that increases in concentration will not exceed 5% of the 3-hour increment for SO_2, 4% of the 24-hour increment for SO_2 and, 2% of the 24-hour increment for TSP, at downwind distances of less than 1.5 km. Concentration increases are less than 1% of the annual TSP and SO_2 increments.

The U.S.E.P.A. has issued preliminary PSD approval of this installation.

QUALIFICATION:

In accordance with the emissions testing requirements of the NSPS, within 180 days after startup, emissions testing shall be performed on the No. 2 recovery boiler, new lime kiln, No. 2 smelt dissolving tank, and the existing combination power boiler to demonstrate compliance with all applicable federal and state emission limitations.

DEPARTMENT OF POLLUTION CONTROL AND ECOLOGY
D.A.P.C.

SUMMARY REPORT RELATIVE TO PERMIT APPLICATION

SUBMITTED BY: Nekoosa Papers, Inc.

Ashdown, Arkansas

CSN: 410002

FIRST SUBMITTAL: November 17, 1976 AMENDED:

CASE REFERENCES:

SUMMARY:

Nekoosa plans to replace the existing demister pad control on their black liquor smelt dissolving tank vent with a Heil Model 728 Venturi scrubber. The scrubber will utilize a 75 HP fan and is designed for a 90 + % removal of particulates based on 30,000 cfm and a 3 gr/ft^3 loading.

The more efficient scrubber system will provide a significant decrease in particulate emissions and will have no effect on recovery boiler load. Predicted particulate emission rate with the new scrubber installed is 1.04 pounds per hour.

ESTIMATED COST: $90,000 TOTAL PROJECT:

COMMENCEMENT OF INSTALLATION: DECEMBER 1976

COMMENCEMENT OF OPERATION: APRIL 1, 1977 (approximate)

REVIEWED BY: JBJ APPROVED: JES

RECOMMENDATION: APPROVAL

ASSIGNED PERMIT NUMBER: 390-A

COMMISSION MINUTE ORDER NUMBER:

DEPARTMENT OF POLLUTION CONTROL AND ECOLOGY
D.A.P.C.

SUMMARY REPORT RELATIVE TO PERMIT APPLICATION

SUBMITTED BY: Nekoosa-Edwards Paper Company

Ashdown

CSN: 410002

FIRST SUBMITTAL: December 10, 1974 AMENDED: _____

SUMMARY: Nekoosa-Edwards proposes the installation of a power boiler at its existing papermill near Ashdown. The primary fuel is to be coal with a typical sulfur content of 1.27%, and bark will be used as a supplementary fuel. The maximum coal rate will be 59,300 pounds per hour of coal to produce 500,000 pounds per hour of steam at 850 pounds pressure.

965 Tons/hr

The coal will be shipped via railroad, with approximately seven cars per day being required at maximum production. The unloading building is to be completely enclosed while each car is being unloaded. A dust suppresant will be sprayed on the coal during the unloading operation. Enroute to the silos, the coal will be crushed in a sealed building. An emergency coal stockpile will be built by diverting the coal to trucks. A telescoping coal chute and dust suppression sprays will be used to minimize fugitive emissions during this operation.

The flue gases from the boiler will be treated with a mechanical collector. The gases will then be treated with two venturi scrubbers in parallel using sodium hydroxide as a scrubbing medium. The scrubbers are to be installed with extended shells such that additional scrubbing capacity can be installed at a later date if it is found to be required. The SO_2 emission rate is predicted to be 855 pounds per hour, and the particulate emission rate is predicted to be 30 pounds per hour.

The slurry underflow of the scrubber recycle tank will be continuously pumped to a separator - thickener. The underflow from the separator will be discarded and the supernatant will be introduced into the plants liquor streams.

The Department's dispersion modeling predicts compliance with Subsection 7(a) and Section 8 of the Code. However, as the sulfur captured by the scrubbers is to be added to the plant liquor streams, it is not possible to predict the sulfur balance for the facility as a whole. Therefore, the resulting emissions of sulfur compounds can not be predicted at this time.

QUALIFICATIONS:

(1) Nekoosa-Edwards continue it's stack monitoring program until the stack tests show that the facility's sulfur compound emissions have stabilized. At that time, the emission data will be inputed into the Department's ambient air modeling. If non-compliance is shown, Nekoosa-Edwards will submit a compliance schedule.

(2) This installation be operated in compliance with the USEPA Standards of Performance For New Stationary Sources.

ESTIMATED COST: $1,500,000 TOTAL PROJECT: $13,800,000

COMMENCEMENT OF INSTALLATION: Upon Approval

COMMENCEMENT OF OPERATION: _____

REVIEWED BY: CDH APPROVED BY: JES

RECOMMENDATION: APPROVAL WITH QUALIFICATIONS

ASSIGNED PERMIT NUMBER: 287-A

PRE INSPECTION CHECKLIST

NSPS Application Subpart(s) D and BB

SIP Permit Number(s) _____

PSD Permit Number(s) PSD-AR-42

Nekoosa Papers, Inc.
Company Name

CSN 4100002

Is source required to keep records? X YES ____ NO
If so what record?
CEM monitor

Which of the following sections of the inspection form is applicable for the facility you are going to inspect:

[X] Continuous Emissions Monitors
[X] Fossil-Fuel-Fired Boiler
[ ] Coal Preparation Plant
[ ] Asphalt Plant
[ ] Incinerator
[ ] VOC Storage
[X] Kraft Pulp Mill
[ ] Other _____

What sources or emission points at the facility are subject to NSPS?
No. 2 power boiler
No. 2 recovery boiler
Dissolving tanks
No. 2 lime kiln

What sources or emission points are subject to PSD?
No. 2 recovery boiler (ESP)
Dissolving tank scrubber (2)
Lime kiln (scrubber)

What sources or emission points are subject to SIP?

What sources or emission points are subject to NESHAPs?

Arkansas Air Inspection Form

General Information

Date of Inspection April 5, 1983

Time In: 8:30 a.m. Time Out: 4:00 p.m.

Company Name Nekoosa Papers, Inc. CSN

Address U.S. Highway 71

City or Town Ashdown, AR County Little River

Mailing Address P.O. Box 496

Ashdown, AR 71822

Type of Industry Kraft pulp mill and paper manufacturing

Type of Inspection (circle): SIP, NSPS, PSD, Complaint, NESHAP

NSPS Applicable Subpart D and BB

Company Personnel	Name	Title	Phone
Responsible for Facility	Ray Taylor	Vice President-Southern Div.	(501) 898-2711
Responsible for Environmental Matters	Bill Matthews	Environmental Engineer	(501) 898-2711
Company Personnel Contacted	Bill Matthews	Environmental Engineer	(501) 898-2711

Normal Operation Schedule:

24 hrs./day 7 days/wk. 52 wks./yrs.

Production Rate at Time of Inspection: 1200 ADTPD

Maximum Design Capacity: 1335 ADTPD

INSPECTOR'S SUMMARY

Comments and Recommendations:

Pulp production 1,222 ADTPD

Paper production 1,427 ADTPD

Coal burning only in power boiler at 12:30. Coal feed rate ≃ 37,000 lb/h.

Maximum bark feed ≃ 20 ton/h.

Maximum coal feed ≃ 22-25 ton/h.

Smelt dissolving tank

11.5 lb/gal density

7.25 lb solids/gal of liquor

440 gpm is higher than normal because No. 1 recovery boiler was down for maintenance at the time of the inspection.

Compliance Status (Write In, Out, Unk., N/A): _____ Air Code, _____ SIP, _____ NSPS

_____ PSD, _____ NESHAP

Next Inspection Date: _____

Inspector's Signature _____

CONTROL EQUIPMENT INFORMATION

EMISSION POINT	TYPE OF CONTROL EQUIPMENT	PRESSURE DROP (A)	WATER FLOW RATE (B) GAL/MIN	AIR FLOW Ft^3/ MIN (C)
No. 2 power boiler (4)	Scrubbers	(12' stack) 18" 18"	 1200 1200	250,000 acfm
No. 2 recovery boiler (3S, 3N)	ESP			292,000
Dissolving tanks 2S 2N	 Scrubber Scrubber	 4" 4"	 Flow meters are broken	35,750
No. 2 lime kiln (1)	Scrubber	20"-21"	1800	39,761

FOOTNOTES: (1) CYCLONE (A) (C)
(2) BAGHOUSE (A) (C)
(3) SCRUBBERS (A) (B) (C)
(4) WATER SPRAY (B)
(5) ESP (C)
(6) OTHER

ARE THERE ANY UNCONTROLLED SOURCES LOCATED AT THE FACILITY? _____ YES __X__ NO

IF YES, LIST THEM. _____ _____ _____

_____ _____ _____

_____ _____ _____

Notes: Coal sulfur content = 2 to 3 percent.

Recovery Boiler ESP:

North Precipitator Primary Current	South Precipitator Primary Current
Amps 0/100/220	320/200/270
Volts 0/320/330	330/268/260
Secondary	Secondary
Milliamps 0/500/950	1500/850/1450
KV 0/ 70/ 62	50/ 50/ 40

Rapping - every 15 minutes.

11:00 Opacity 10%.

Recovery boiler

Operating 440 gpm, 67% solids

Producing steam 440,000 lb/h, 830°F, 940 psi

No. 2 power boiler - 124°F, 7.1% O_2, 41 ppm SO_2, 0.1 SO_2 lb/10^6 Btu

Recovery boiler:

Scrubber 1	Scrubber 2
Flow (gpm) 2,097	1,785
Differential pressure 18	18 (in. of H_2O)
pH 10.4	7.0

Maintenance of Control Equipment:

(1) Does facility maintain a maintenance program for control equipment?

X yes ____ no

(2) How often is control equipment checked and by whom? Daily by operators and technical services

(3) Are records kept on maintenance of control equipment? X yes ____ no

(If yes, ask to see records)

Upsets

Have there been any upsets within the last 3 months which caused emissions above the allowable limits or odors to escape into the ambient air? yes X

no ____ Was upset reported to Agency? X yes ____ no

Have there been any changes or modifications in plant's process or operation since the last air inspection?

____ yes X no If yes, list date and type of change.

Boiler Information

EMISSION POINT	Fuel Used	% Sulfur	% Ash	% Moisture	Design Capacity BTU/HR Input	or LBS/HR Steam
Power boiler	Coal/ wood waste	2-3% --	20% 2-5%	5-6% 40%	5.8247 x10^8 Btu/h	400,000 to 500,000
Recovery boiler	Black liquor	Black liquor at 67% solids				440,000 lb/h

TABLE #1
CONTINUOUS EMISSION MONITOR INFORMATION

STACK I.D.	No. 2 Recovery Boiler	No. 2 Power Boiler			
Parameter Monitored	Opacity	SO_2			
Monitor Manuf.	Lear Seigler	DuPont			
Model No.	Type RM41-32 No. 1321	460-1			
Reading At Time of Insp.	10%	41 ppm			
Date Last Calibrated	Daily	Daily			

OPACITY _____%

COAL STORAGE

TYPE: SILO ___ PILE X FABRICATED BIN X

STORAGE DESIGN FEED RATE 800 TON/~~HR~~ Day

TYPE OF COAL STORED: RAW ___ WASHED X

DESCRIBE FUGITIVE EMISSION _____

NOTES: Coal sulfur contents running between 2% and 3%.

CONTINUOUS EMISSION MONITORS

(1) MONITOR(S) LOCATION: ON STACK X IN DUCT ____

(2) ARE MONITORS ZEROED DAILY? YES X NO ____

(3) ARE MONITORS CALIBRATED DAILY? YES X NO ____

(4) WHAT TIME OF DAY ARE MONITORS CALIBRATED AND ZEROED? Day shift

GENERAL QUESTIONS ON CEM'S

(1) ARE LOGBOOKS BEING KEPT ON THE FOLLOWING?
MALFUNCTIONS & REPAIRS ON POLLUTION CONTROL DEVICES Yes
MALFUNCTION & REPAIRS ON CEM'S Yes
SPAN CHECKS ADJUSTMENT'S Yes
ZERO CHECK ADJUSTMENT'S Yes
STARTUPS & SHUTDOWNS Yes

(2) ARE STRIP CHARTS IDENTIFIED/LABELED & STORED X YES ____ NO

(3) IS STORED DATA ACCESSED/RETRIEVED EASILY? X YES ____ NO

(4) ARE SPARE PARTS MAINTAINED FOR MONITORS X YES ____ NO

(5) DOES FACILITY HAVE PREVENTATIVE MAINTENANCE PROGRAM X YES ____ NO

(6) HOW OFTEN IN PREVENTATIVE MAINTENANCE PERFORMED? Daily

(7) AT THE TIME OF THE INSPECTION WERE THE MONITOR(S) OPERATING? X YES ____ NO

IF NO, LIST WHAT MONITORS WERE DOWN, AND THE REASON WHY, AND WHAT PART OF THE MONITORING SYSTEM WAS DOWN (EXAMPLE ANALYZER, DATA READER, SAMPLING INTERFACE) AND DURATION OF DOWNTIME.

NOTES ON CEMS:
Monitored on strip chart and information on computer.

Kraft Pulp Mills

Type of wood used: Softwood X Hardwood X
Sulfidity - 20%-25%
Sulfide content of white liquor _____

Pulping Capacity 1,335 ADTPD

Recovery Boiler or Furnace

Black liquor firing rate 300-400 gpm

Percent solids of black liquor 60-65 %

Percent excess air: 2-5% O_2 %

Percent secondary air _____ %

Lime kiln

Type fuel used: Oil _____ Gas X

Fuel Consumption: Oil _____ gal/hr.

Gas 135,000 cf/hr.

Production Rate 17 ton/hr.

Kiln Temperature 500 °F

Raw Material Feed Rate Lime Mud 450-500 gpm ~~xxxxx~~. 16 to 17 ton/h CaO

Sodium content of washed cake 0.1

Make-up rate for salt cake (lbs./salt cake added per ton pulp produced)
115 lb/ton

Notes: _____