CITGO Petroleum Corporation

P.O. Box 4689
Houston, TX 77210-4689

CERTIFIED MAIL RETURN RECEIPT REQUESTED
7005 0390 0005 3108 3057

March 24, 2006

Chief
Environmental Enforcement Section
Environment and Natural Resources Division
U.S. Department of Justice
P.O. Box 7611, Ben Franklin Station
Washington, DC 20044-7611
Reference Case No. 90-5-2-1-07277

Re:

Alternative Monitoring Plans, Appendix E and F
Corpus Christi East Refinery and Corpus Christi West Refinery
CITGO Petroleum Corporation
Civil Action Number H-04-3883
Southern District of Texas, Consent Decree entered January 26, 2005

Dear Chief:

CITGO submitted on July 26, 2005, pursuant to Section V.G., Paragraph 64.c. of the referenced Consent Decree, requests for Alternative Monitoring Plans (AMP) for NSPS Subpart J refinery fuel gas streams and fuel gas combustion devices at the Corpus Christi East Refinery and the Corpus Christi West Refinery. CITGO received a denial letter dated February 22, 2006 for one of the AMPs submitted. Therefore, CITGO has revised the AMPs and requests that the enclosed AMPs replace the July 26, 2005 submittals described in Enclosure 1. The AMP requests for fuel gas streams listed in Appendix E and fuel gas combustion devices listed in Appendix F are included as Enclosures 2 - 10.

Copies are being provided to EPA Headquarters and the Applicable EPA Region as described in Section XVII.

If there are questions, or additional information is required, please contact Janice DeVelasco at 832-486-1521.

Sincerely,

Janice DeVelasco
for

Allen Greene
Manager Environmental Protection

Enclosures

ENCLOSURE 7

ALTERNATIVE MONITORING PLAN
CITGO Petroleum Corporation
Corpus Christi East Refinery
Appendix E

ALTERNATIVE MONITORING PLAN
CITGO Petroleum Corporation
Corpus Christi East Refinery
C5 Merox Disulfide Separator Off Gas

Introduction

The following Alternative Monitoring Plan (AMP) has been developed in accordance with USEPA's guidance issued in *Alternative Monitoring Plan for NSPS Subpart J Refinery Fuel Gas: Conditions for Approval of the Alternative Monitoring Plan for Miscellaneous Refinery Fuel Gas Streams (RFG Guidance).* The RFG Guidance specifies information that must be included to allow for a determination of appropriateness of the AMP. The following information is submitted, per the RFG Guidance, for approval of the use of described recordkeeping and reporting requirements as an alternative to the monitoring described in NSPS Part 60, Subpart J. This request is being made for the C5 Merox Disulfide Separator Off Gas.

Process Description

The primary function of the C5 Extractive Merox Unit is to remove mercaptan sulfur from a stream of mixed C5 olefins in order to make it suitable for use as a gasoline blendstock and as a supplemental Alky Unit feedstock. These mercaptan sulfur compounds are unacceptable in gasoline blendstocks because they are corrosive and exhibit a sour odor. These compounds are also unacceptable in Alky Unit feeds because they result in high acid consumption by increasing the formation of tars and polymers.

The C5 Merox Unit removes sulfur from the feed by contacting it with a circulating stream of dilute caustic which reacts with the mercaptans to convert them to a water soluble sodium mercaptide. These mercaptides are then absorbed from the feed into the lean caustic stream, and the low-sulfur product leaves the unit to go to either gasoline storage or the Alky Unit. The merox process allows for regeneration of the caustic stream by contacting it with process air in the presence of a catalyst so that the entrained mercaptans can be converted to disulfides, which are not soluble in the caustic and separate out as a disulfide oil in the Wash Naphtha stream. Proper regeneration of the caustic is vital to the efficiency of the extraction process. Wash naphtha is used to absorb any unconverted mercaptans or residual entrained disulfide oil in the regenerated caustic out of the disulfide separator.

Process Flow (Refer to Figure 1)

The C5 Merox Unit can be divided into three sections: C5 extraction, Caustic Regeneration, and Caustic Storage.

C5 Extraction

The C5 Extraction section contacts the mixed C5 olefins with lean circulating caustic through a series of trays. The C5's leave the top of the Extractor into a Caustic Knockout Drum, which coalesces and removes any entrained caustic from the C5 olefins before the C5's are pressured out to storage or another area to be blended or processed.

Caustic Regeneration

The Caustic Regeneration Circuit oxidizes and separates the sulfur compounds from the regenerated caustic and pumps the regenerated caustic from recycling back to the Extraction circuit. Mercaptans are removed from the caustic solution when a controlled amount of oxygen is mixed with the rich caustic solution. The mixture is then preheated and sent to the Oxidizer. The catalyst and the packing in the Oxidizer lead to the conversion of water-soluble mercaptans in the caustic solution into oil-soluble disulfides (i.e., disulfide oil or DSO). The regenerated caustic solution is separated from the DSO and excess air in the disulfide separator. The recovered regenerated caustic and wash naphtha solution is pumped back to the naphtha settler after being separated in the disulfide separator and the excess air vent is routed to the #4 Platformer Stabilizer Reboiler Trim Heater for combustion. The wash naphtha stream absorbs the oil soluble DSO from the caustic. Since the DSO is oil soluble, it tends to get dissolved in the naphtha rather than remain in the water based regenerated caustic solution. The Naphtha Wash Settler separates the naphtha and the lean (regenerated) caustic. The settled caustic is pressured out to the extractor or sent to the spent caustic tank when it is too weak. A slip stream of wash naphtha off of the top of the naphtha settler goes to the Oxidizer.

Caustic Storage

Spent caustic comes from the Wash Naphtha Settler to the spent caustic storage tank. The spent caustic is then loaded up into trucks at the vacuum truck loading station for proper disposal. Fresh caustic is pumped from TK-102 and mixed with the rich caustic stream out of the Extractor bottoms, going into the caustic heater upstream of the Oxidizer.

<u>No Crossover or Entry Points for Sour Gas</u>

The C5 Merox Disulfide Separator air vent does not contain any crossover or other entry points for sour gas to be introduced into the vent gas. The spent air vent gas does combine with purchased natural gas. The purchased gas ensures that vent air is hydrocarbon rich and not an explosive air mixture. Refer to Figure 1.

<u>Low Sulfur Conditions and Requirements</u>

The C5 Merox Disulfide Separator air vent contains no H_2S at any time in the gas stream. H_2S is indicated by monitoring regenerated caustic strength returning to the Extractor. Proper regeneration of the caustic is vital to the efficiency of the extraction process. Efficient regeneration ensures the C5 Merox is able to remove mercaptan sulfur from a stream of mixed C5 olefins in order to make it suitable for use as a gasoline blendstock and as a supplemental Alky Unit feedstock. These mercaptan sulfur compounds are unacceptable in gasoline blendstocks because they are corrosive and exhibit a sour odor. These compounds are also unacceptable in Alky Unit feeds because they result in high acid consumption by increasing the formation of tars and polymers.

ALTERNATIVE MONITORING PLAN
CITGO Petroleum Corporation
Corpus Christi East Refinery
C5 Merox Disulfide Separator Off Gas

Initial Monitoring

Attached in Table 1 are fourteen (14) daily samples collected for the C5 Merox Disulfide Separator Vent Gas. All samples were obtained as grab samples and analyzed using GASTEC Detector Tubes (No. 4LT, Hydrogen Sulfide). The disulfide separator vent gas H_2S content was 0 ppmv on all of the samples. The regenerated caustic spent wt.% was also measured on the same days.

Monitoring Proposal

1. CITGO Corpus Christi East Refinery will monitor the H_2S content of the Merox Disulfide Separator Spent Air Vent on a once/day frequency with detector tubes of an appropriate range.

2. Though not expected, if at any time the H_2S average detector tube result plus 3 standard deviations for the seven most recent samples is greater than 81 ppm, CITGO shall notify the agency of those results before the end of the next business day following the last sample day. Sampling will continue on a once/day basis until the agency approves a revised sampling schedule or makes a determination to withdraw approval of the gas stream/system from the AMP.

Records of the H_2S detector tube results will be maintained for a period of two (2) years.

ALTERNATIVE MONITORING PLAN
CITGO Petroleum Corporation
Corpus Christi East Refinery
C5 Merox Disulfide Separator Off Gas

Figure 1

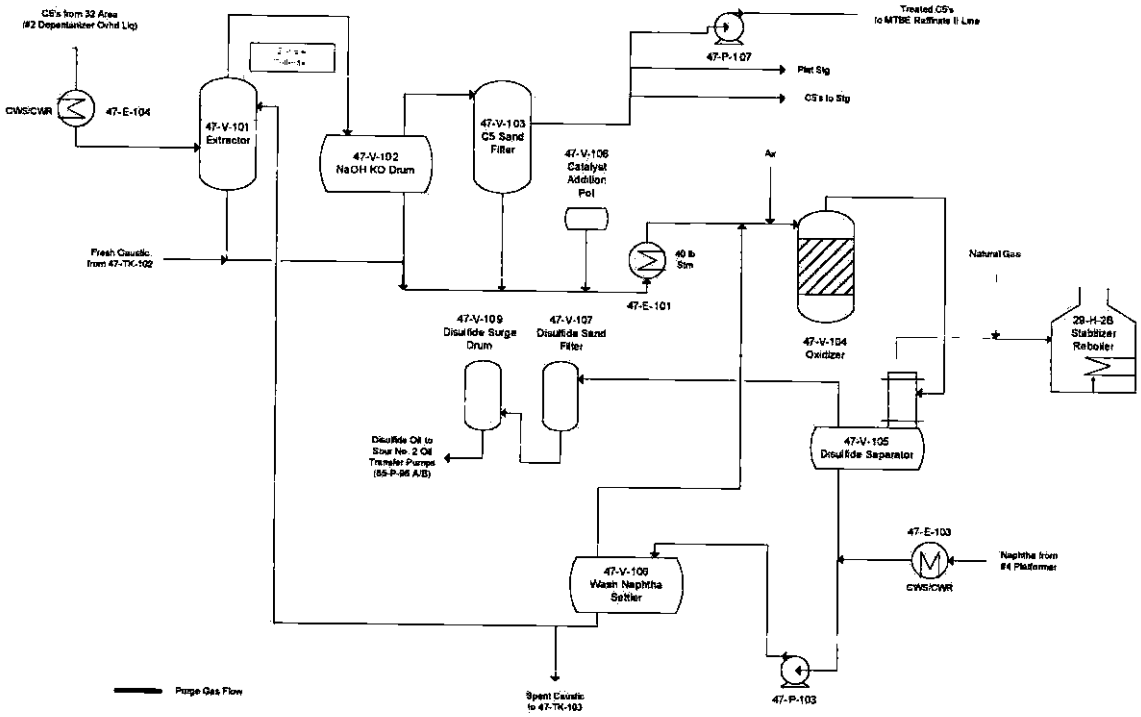

ALTERNATIVE MONITORING PLAN
CITGO Petroleum Corporation
Corpus Christi East Refinery
C5 Merox Disulfide Separator Off Gas

Table 1

	H_2S	Caustic Spent Wt.%
6/1/2005	0	0.7
6/2/2005	0	0.6
6/3/2005	0	0.5
6/4/2005	0	0.6
6/5/2005	0	0.7
6/6/2005	0	0.4
6/7/2005	0	0.7
6/8/2005	0	0.9
6/9/2005	0	0.6
6/10/2005	0	0.7
6/11/2005	0	0.4
6/12/2005	0	0.4
6/13/2005	0	0.6
6/14/2005	0	0.5