CITGO Petroleum Corporation

P.O. Box 4689
Houston, TX 77210-4689

CERTIFIED MAIL RETURN RECEIPT REQUESTED
7005 0390 0005 3108 3057

March 24, 2006

Chief
Environmental Enforcement Section
Environment and Natural Resources Division
U.S. Department of Justice
P.O. Box 7611, Ben Franklin Station
Washington, DC 20044-7611
Reference Case No. 90-5-2-1-07277

Re:

Alternative Monitoring Plans, Appendix E and F
Corpus Christi East Refinery and Corpus Christi West Refinery
CITGO Petroleum Corporation
Civil Action Number H-04-3883
Southern District of Texas, Consent Decree entered January 26, 2005

Dear Chief:

CITGO submitted on July 26, 2005, pursuant to Section V.G., Paragraph 64.c. of the referenced Consent Decree, requests for Alternative Monitoring Plans (AMP) for NSPS Subpart J refinery fuel gas streams and fuel gas combustion devices at the Corpus Christi East Refinery and the Corpus Christi West Refinery. CITGO received a denial letter dated February 22, 2006 for one of the AMPs submitted. Therefore, CITGO has revised the AMPs and requests that the enclosed AMPs replace the July 26, 2005 submittals described in Enclosure 1. The AMP requests for fuel gas streams listed in Appendix E and fuel gas combustion devices listed in Appendix F are included as Enclosures 2 - 10.

Copies are being provided to EPA Headquarters and the Applicable EPA Region as described in Section XVII.

If there are questions, or additional information is required, please contact Janice DeVelasco at 832-486-1521.

Sincerely,

Janice DeVelasco

Allen Greene
Manager Environmental Protection

Enclosures

ENCLOSURE 2

ALTERNATIVE MONITORING PLAN
CITGO Petroleum Corporation
Corpus Christi East Refinery
Appendix E

RECEIVE

MAR 2 9 2006

Air/Toxics & Inspection
Coordination Branch
6EN-A

ALTERNATIVE MONITORING PLAN
CITGO Petroleum Corporation
Corpus Christi East Refinery
Cumene Depropanizer Off Gas

Introduction

The following Alternative Monitoring Plan (AMP) has been developed in accordance with USEPA's guidance issued in *Alternative Monitoring Plan for NSPS Subpart J Refinery Fuel Gas: Conditions for Approval of the Alternative Monitoring Plan for Miscellaneous Refinery Fuel Gas Streams (RFG Guidance).* The RFG Guidance specifies information that must be included to allow for a determination of appropriateness of the AMP. The following information is submitted, per the RFG Guidance, for approval of the use of described recordkeeping and reporting requirements as an alternative to the monitoring described in NSPS Part 60, Subpart J. This request is being made for the Cumene Depropanizer Off Gas to fuel.

Process Description

The Cumene Unit converts benzene to Cumene primarily by alkylation of the benzene molecule with a propylene molecule. The primary reaction results in some over-alkylation of the benzene molecule yielding diisopropylbenzene isomers (DIPB), triisopropylbenzene isomers (TIPB), and heavier molecules. The DIPB and TIPB are transalkylated with benzene for conversion to Cumene. All reactions take place in liquid phase reactors containing a zeolite catalyst operating under appropriate temperatures and pressures. Alkylation reactor effluent is distilled to remove: 1. Propane; 2. Benzene for recycle back to the reactors; 3. Cumene product; 4. Over alkylated molecules and; 5. several purge/residue streams. The over alkylated material, DIPB and some TIPB molecules are sent along with some of the recycle benzene to a transalkylator reactor for conversion to Cumene. Effluent from this reactor is also distilled to remove the same cuts as those removed from the alkylation reactors with the exception of propane which is not present. Excess recycle benzene is charged back to the alkylation reactors for reaction with additional propylene charge. Propylene to the process is delivered as a P-P mix of propylene/propane (in an approximate 75%/25% ratio respectively). Propane is non-reactive in the alkylation reactors and is recovered as marketable propane after polishing in a KOH treater. Makeup-benzene is delivered to the alkylation reactors as part of the recycle benzene stream generated from the Depropanizer.

Process Flow (Refer to Figure 1)

P-P, produced in the Fluid Catalytic Cracking Process, is dried and catalytically treated in a Sulfur Guard vessel to remove sulfur down to a part per billion (ppb) level in the P-P feed prep section. The P-P is then split into two equal streams and charged to the two alkylation reactors. A recycle benzene stream is charged to the first reactor, with the effluent from the first reactor flowing along with the other half of the P-P to the second reactor. Under proper reactor conditions, the propylene is totally reacted. Propane is inert and non-reactive. Effluent from the second reactor flows to the No. 1 Rectifier where propane and some of the excess benzene is distilled overhead to the Depropanizer.

ALTERNATIVE MONITORING PLAN
CITGO Petroleum Corporation
Corpus Christi East Refinery
Cumene Depropanizer Off Gas

The primary function of the Depropanizer is to separate propane from the benzene rich stream. Propane is the overhead product while recycle benzene is the bottoms product. The Depropanizer Overhead Receiver Off Gas is directed to the refinery fuel system. Bottoms from the No. 1 Rectifier are charged to the No. 2 Rectifier where distilled overhead material becomes part of the recycle benzene stream. No. 1 Rectifier bottoms material is charged to the Recycle Benzene Column for further benzene separation from Cumene and heavier materials. After final benzene recovery in the Recycle Tower, benzene free bottoms are charged to the High Pressure Cumene Column for product purification. The High Pressure Cumene Column is operated to: 1 Take a "light" Cumene impurities overhead as a purge stream; 2. Pull a portion of the Cumene present out of side draw as high purity Cumene product and; 3. Provide bottoms which are fed to the Low Pressure Cumene Column for final Cumene recovery. The Low Pressure Cumene Column distills most of the remaining Cumene overhead while dropping heavier components to the bottoms as charge to the DIPB Column. The function of the DIPB Column is to: 1. Distill a "heavy" Cumene impurity overhead as a purge stream; 2. Side draw the diisopropylbenzene and some of the triisopropylbenzes for feed to the transalkylator reactor and; 3. Provide the bottoms residue as a purge from the unit. The DIPB Column side draw material is charged along with some of the recycle benzene from the Recycle Benzene OH stream to a transalkylation reactor for the production of additional cumene concentrate. Effluent from the transalkylator reactor is charged to the Recycle Benzene Column for the required fractionation of the effluent into the proper product streams, recycle streams, and purge streams. Fresh benzene to the unit is charged to the Depropanizer. This processing serves to remove any water from the stream. Benzene boiling range impurities are removed from the system by taking a purge stream from the overhead of the Benzene Recycle Column.

No Crossover or Entry Points for Sour Gas

The Cumene Depropanizer Off Gas yielded to fuel gas does not contain any crossover or other entry points for sour gas to be introduced into the off gas. The Depropanizer Off Gas combines downstream with treated fuel gas from the mixed fuel gas drum, which is monitored according to NSPS Part 60, Subpart J. An associated P&ID is attached.

Low Sulfur Conditions and Requirements

The Cumene Depropanizer Off Gas contains very low amounts of sulfur compounds in the gas stream at all times. This is due to upstream treating required to meet the low sulfur requirements for feeds to the sulfur sensitive cumene process, where sulfur is a catalyst poison. Sulfur in the Depropanizer Off Gas can be indicated by monitoring the Cumene Unit P-P feed stream which is sampled daily (upstream of the sulfur guard bed) for any sulfur bearing compounds. Additionally, the P-P feed stream is monitored 2 times weekly for sulfur after the sulfur guard bed.

ALTERNATIVE MONITORING PLAN
CITGO Petroleum Corporation
Corpus Christi East Refinery
Cumene Depropanizer Off Gas

Monitoring Results

CITGO Corpus Christi East Refinery monitored the H_2S (ppm) content of the Depropanizer Off Gas stream and the sulfur concentration (ppm) of the Propylene/ Propane (P-P) feed from 06/07/05 to 06/22/05. The H_2S monitoring was conducted using GASTEC Detector Tubes (No. 4LT, Hydrogen Sulfide) and all samples were obtained as grab samples. The P-P feed sulfur was measured in the Refinery Laboratory. The data is summarized below.

Date	Depropanizer Off Gas (ppm H_2S)	P-P Feed Sulfur (ppm Sulfur)
6/7/05	0	.8
6/8/05	0	.6
6/9/05	0	.6
6/10/05	0	.8
6/11/05	0	1.1
6/12/05	0	.3
6/13/05	0	.4
6/14/05	0	.2
6/15/05	0	.8
6/16/05	0	.9
6/17/05	0	1.9
6/18/05	0	1.4
6/19/05	0	1.6
6/20/05	0	1.2
6/21/05	0	1.8
6/22/05	0	2.4
AVERAGE	0	

Monitoring Proposal

1. CITGO Corpus Christi East Refinery will monitor the sulfur concentration of the P-P feed to the Cumene Unit on a scheduled daily basis. This monitoring will be done upstream of the Unit Sulfur Guard.
    - A maximum control point of 10 ppm sulfur in the P-P feed be utilized as an indicator of the sulfur content in the Depropanizer Off Gas. Downstream of this monitoring point is the Unit Sulfur Guard where the P-P is sampled 2 times per week. The sulfur reduction across the sulfur guard will be a minimum of 50% of the sulfur contained in the feed to the guard bed. P-P is typically 75% propylene and 25% propane. Consequently, an absolute maximum appreciation factor of 4 would be realized if all of the sulfur in the P-P ended up in the Off Gas. At 10 ppm

sulfur in the P-P feed to the Sulfur Guard, the maximum anticipated sulfur in the Depropanizer Off Gas would be (10 ppm in P-P) * (.5 reduction) * (4 max concentration factor) = 20 ppm absolute maximum expected. Should the Sulfur Guard be bypassed for a catalyst change out, the maximum anticipated sulfur in the Depropanizer Off Gas would be 40 ppm at the recommended trigger point of 10 ppm for the alternative monitoring plan.

2. Additionally, the H_2S content on the Cumene Depropanizer Off Gas stream will be sampled with detector tubes of an appropriate range on a reducing frequency schedule as follows:
   - Twice per week for six months,
   - Once per quarter for six quarters with a minimum of 1 month between samples,
   - Twice per year with a minimum of 3 months between samples.

3. Though not expected, if at any time the P-P feed to the Cumene Unit tests 10 ppm or greater sulfur, or the detector tube result is equal to or exceeds 81 ppm, the Depropanizer Off Gas stream shall be sampled for H_2S with detector tubes of an appropriate range on a daily basis for seven (7) days.

3. The following actions will be taken:

   - ***Avg <81 ppm H_2S***
     If the average detector tube result plus 3 standard deviations for those seven samples is less than 81 ppm H_2S, CITGO shall resume the current monitoring schedule.

   - ***Avg >81 ppm H_2S***
     If the average detector tube result plus 3 standard deviations for those seven samples is greater than 81 ppm H_2S, CITGO shall notify the agency of those results before the end of the next business day following the last sample day. The Depropanizer Off Gas stream shall subsequently be tested daily for a two week period. After the two week period is complete, sampling will continue once per week, until the agency approves a revised sampling schedule or makes a determination to withdraw approval of the gas stream/system from the AMP.

Records of the P-P feed to the Cumene Unit sulfur concentration and H_2S detector tube results will be maintained for a period of two (2) years.
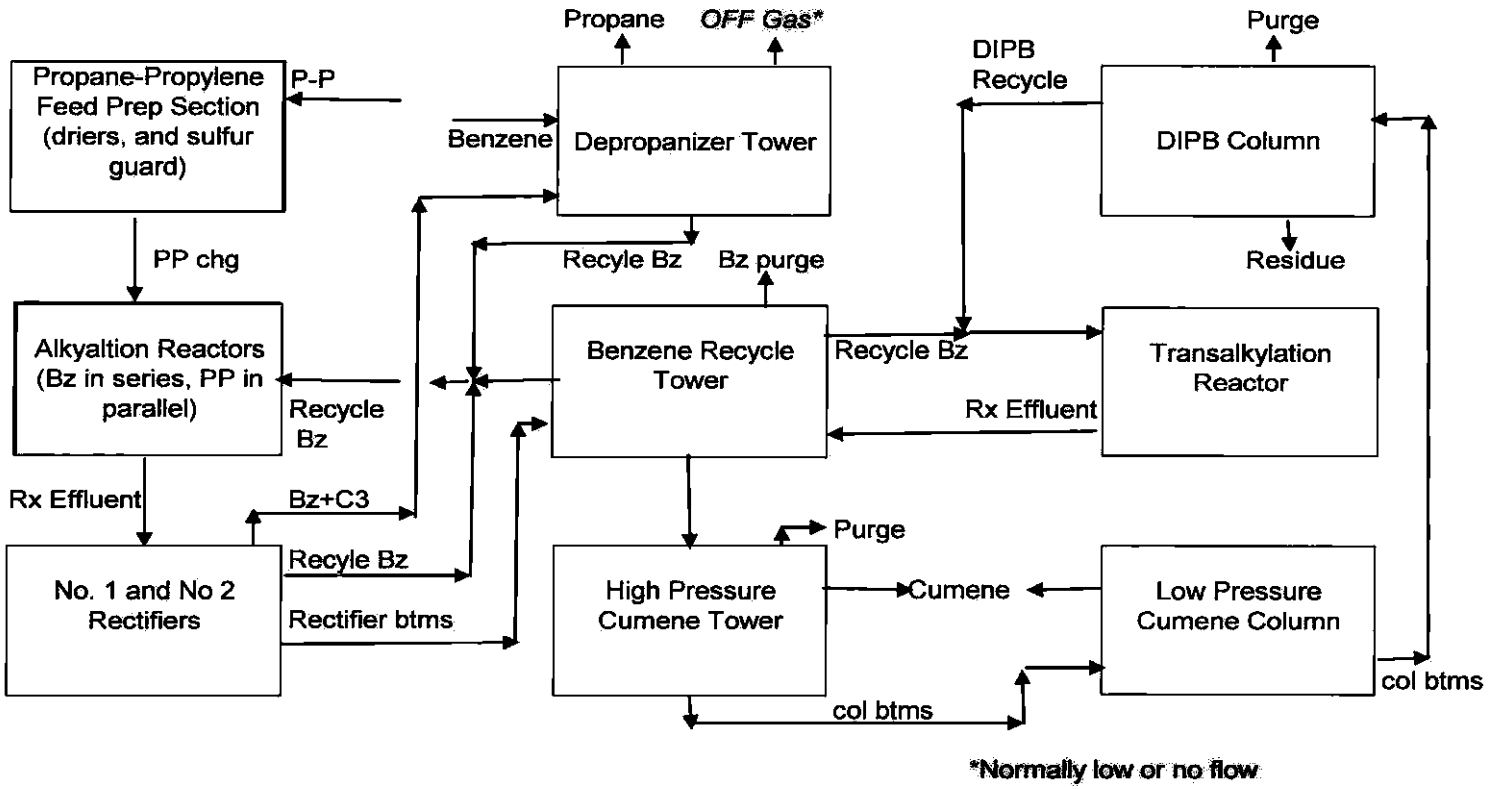
Figure I
Block Flow Diagram
Cumene Unit Process