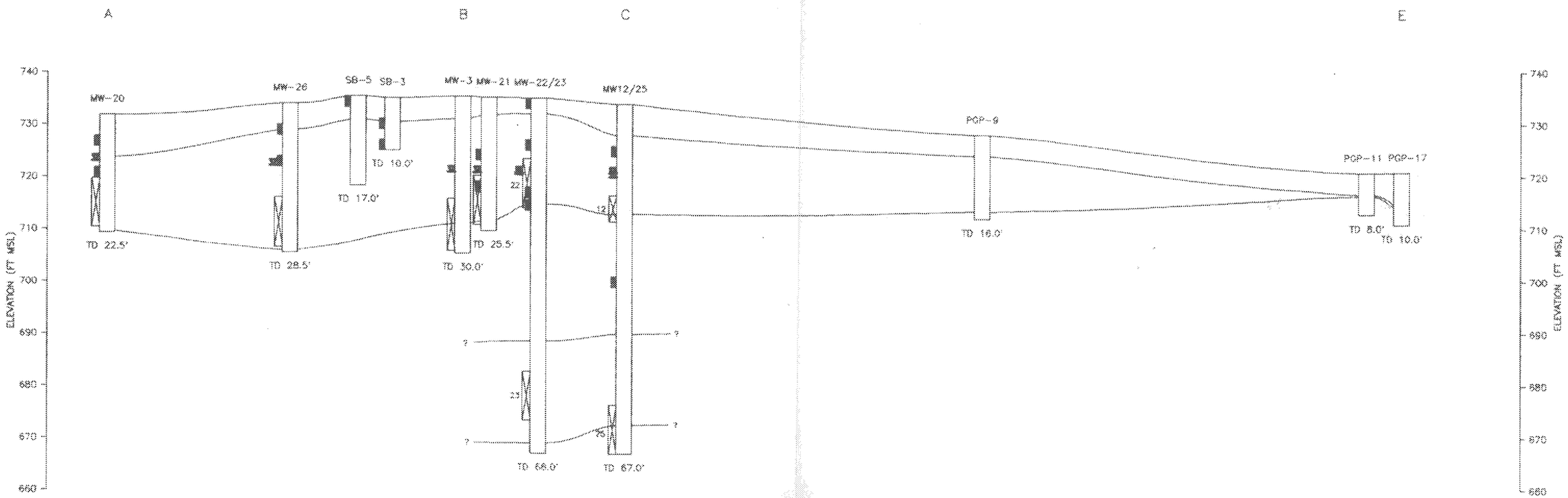

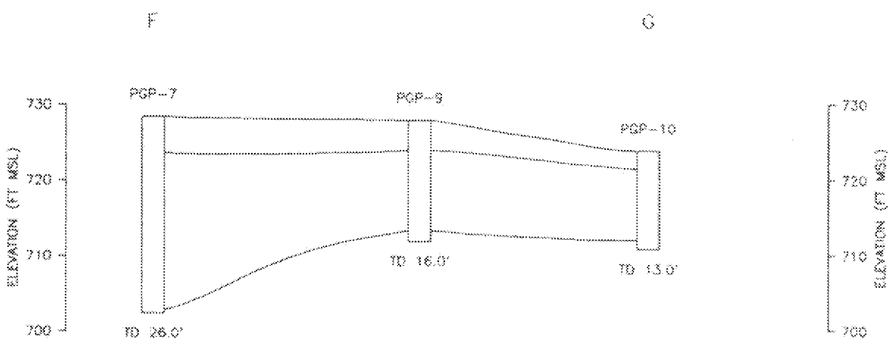

0 100 200 FEET

HORIZONTAL SCALE

10X VERTICAL EXAGGERATION

EXPLANATION

Screened Interval

Soil Sample

Ground Water Elevation in Ft MSL, February 16, 1993

Lines of Section Shown on Sheet 3

WW Engineering & Science
A Tetra Tech Company

CURTIS-FRANKLIN
FRANKLIN, INDIANA
FORMER AMPHENOL RPI/CMS

CROSS SECTIONS A-B-C-E & F-G

4A