PERMIT-TO-INSTALL APPLICATION
OHIO RIVER CLEAN FUELS FACILITY
VILLAGE OF WELLSVILLE, COLUMBIANA AND JEFFERSON COUNTIES, OHIO

SUBMITTED TO:

OHIO ENVIRONMENTAL PROTECTION AGENCY

SUBMITTED BY:

OHIO RIVER CLEAN FUELS, LLC
800 NE TENNEY ROAD, SUITE 110, #104
VANCOUVER, WASHINGTON 98685

Ohio River Clean Fuels, LLC

Baard Energy, LLC

PREPARED BY:

CIVIL & ENVIRONMENTAL CONSULTANTS, INC.
333 BALDWIN ROAD
PITTSBURGH, PENNSYLVANIA 15205

CEC PROJECT 061-933.0024

December 18, 2007
Revision 1, July 2008

MODULE 2

1.0 PROCESS DESCRIPTION

This section describes activities associated with processing of feedstock (coal and biomass) prior to delivery to the gasification process. Figures 5 through 9 depict the feedstock processing operations (see Attachment 2A).

One method of feedstock delivery will be via conveyor from barge and/or railcar suppliers. Coal and biomass will be transferred onto ORCF property via two parallel 100% enclosed conveyors and five transfer towers. Approximately 3,200 feet of completely enclosed conveyor will be used for each parallel feedstock delivery system. Both conveyors will be capable of handling either coal or biomass. Each transfer tower will be equipped with a baghouse to control particulate emissions. Feedstock will either be accumulated in storage piles (described in Module 1) or directed to the coal or biomass crusher houses for immediate use.

Another method of feedstock delivery will be by truck. Coal and biomass truck unloading will occur within the coal and biomass hopper building (for building location see Figure 2 – Proposed Plot Plan). The coal and biomass hopper building will be totally enclosed and equipped with a baghouse for control of particulate emissions. Coal and biomass delivered to the hopper building will either be conveyed to the coal or biomass crusher houses or to the adjacent storage piles. The coal and biomass hoppers will each be sized to handle up to 300 tons per hour (tph).

Both the coal crusher house and the biomass crusher house will be equipped with two crushers rated at 1,000 tph each. The crushers will reduce feedstock materials to the required size. The crusher houses will enclose the crushers and vent to baghouses. Coal will be fed to the coal crusher house surge bin from either a transfer tower at 2,000 tph or from a storage pile reclaimer at 3,500 tph. Biomass will be fed to the biomass crusher house surge bin from a transfer tower at 2,000 tph.

Feedstock will exit the crusher houses via two enclosed conveyors for transfer to another transfer tower from which feedstock will be fed to the eight silos associated with milling and drying. Each pair of silos will be equipped with a baghouse. From the silos, feedstock will be delivered to one of ten bunkers.

The Coal Milling and Drying (CMD) Unit will consist of ten identical process trains, each equipped with one roller mill and one hot gas generator. Each train will be sized to process 11% of the total plant capacity, giving a total capacity of 110%, which will allow for short term, unscheduled maintenance work on one train while the others are still in operation. Each train will be capable of processing either coal or biomass.

Each CMD mill will be equipped with its own bunker. The bunkers will be vented via bunker vent fans through bunker filters. The roller mills will pulverize the feedstock to a size range suitable for efficient gasification. As the feedstock is ground, it will be simultaneously dried utilizing a heated gas stream. The hot gas stream will remove the evaporated water from the system as it sweeps the pulverized feedstock through an internal classifier for collection in a

CMD baghouse. The gas stream leaving the baghouse filter will be recycled back to the CMD to continue the drying process. To maintain low moisture content in the gas recycle, about 26% of the filtered gas will be exhausted to the atmosphere and replaced by hot gas. There will be ten CMD exhaust stacks, one for each train.

The heat required for drying the feedstock will be supplied by a hot gas generator with a nominal rated capacity of 31 MMBtu/hr. Each hot gas generator will burn a mixture of clean syngas or natural gas and a waste gas stream containing carbon monoxide (CO) from the Rectisol Acid Gas Removal (AGR) Unit (see Module 5). Natural gas will be used during startup. The hot gas will enter the mill with an inlet temperature between 302 and 572 °F and leave the mill at between 212 and 230 °F. The gas will transport the pulverized coal and biomass to the rotary classifier from which the coarse particles will be returned to the mill. Foreign material and fragments will be rejected to the mill reject boxes (gastight valve systems underneath a grinding table). The gas loaded with fine particles will be sent from each mill to its dedicated CMD baghouse for separation. The gas will be recirculated back to the gas generator while the milled feedstock will be transported to the gasifier.

The milled and dried feedstock from the CMD area will be transported from the mills to pressurization and feeding lines via pneumatic transport lines. The pressurization and feeding lines consist of lock hoppers and feed hoppers. Once a lock hopper has been charged with feedstock, it will be pressurized with CO_2 and the contents will be discharged into a feed hopper. Pressurized feedstock will be withdrawn from the feed hoppers and pneumatically (in dense phase) conveyed by CO_2 to the gasifier burners. Each train includes one filling vessel equipped with a fill filter that vents to the atmosphere. Dense-phase transport of coal through these vessels will displace an estimated 2,149 acfm of particulate-laden gas through the filter media, while dense-phase transport of biomass through the filling vessels will displace an estimated 2,375 acfm of particulate-laden gas.

Activities associated with feedstock processing, including conveyor transport to the storage piles and transfer towers, as well as crushing, milling, and drying, are included on the Emission Activity Category (EAC) Form for Coal Processing Plants and Coal Loading Facilities (see Attachment 2D). Coal processing and biomass processing have been summarized on independent EAC Forms.

2.0 AIR EMISSIONS INVENTORY

Air emissions produced by feedstock processing include particulate matter from material transfer activities and combustion emissions from the Coal Milling and Drying process.

2.1 Feedstock Handling Baghouses

Twenty-two point sources of particulate emissions will be associated with feedstock handling equipment (conveyors will be completed enclosed and all transfers will occur within structures controlled by baghouses). As discussed in Section 1.0, feedstock handling equipment will include five transfer towers, a coal and biomass hopper building, a coal crusher house, a biomass crusher house, six coal storage silos (equipped with three baghouses), two biomass storage silos (with one baghouse), seven coal bunkers, and three biomass bunkers.

With the exception of the coal and biomass hopper building, actual particulate emissions from these sources have been estimated on the basis of the expected air flows of the vent fans and the Best Available Control Technology (BACT) grain loading limit of 0.005 grains per dry standard cubic foot (gr/dscf) for total particulate emissions from each dust collector. Actual particulate emission estimates for the coal and biomass hopper building are based on the Ohio EPA Reasonably Available Control Measures (RACM) Guidance Manual (Table 2.19-2) emission rate of 0.02 lb/ton unloaded and an assumed 99% control efficiency for the baghouse.

Potential particulate emission estimates for these sources have been based on the uncontrolled OEPA RACM particulate (Table 2.19-2) emission rates of 0.2 lb/ton (material transfers) and 0.02 lb/ton (crushing operations and truck unloading). Detailed calculations are shown on the accompanying Supporting Calculations (see Attachment 2B). Estimated hourly and annual emissions from these activities are shown in Table 2.1.

Table 2.1
Summary of Feedstock Handling Particulate Emission Estimates

Source	Number of Baghouses	Actual Emission Rate[a]		Potential Emission Rate	
		lb/hr	tpy	lb/hr	tpy
Transfer Towers (5)	5	4.5	19.7	3,200	14,016
Coal/Biomass Hopper Bldg.	1	0.12	0.53	12	52.6
Coal Crusher House	1	1.2	5.1	1,140	4,993
Biomass Crusher House	1	1.2	5.1	1,140	4,993
Coal Silos (6)	3	2.4	10.6	1,200	5,256
Biomass Silos (2)	1	0.9	3.8	400	1,752
Coal Bunkers (7)	7	3.0	13.2	280	1,226
Biomass Bunkers (3)	3	1.3	5.7	120	525
Totals	22	14.6	63.7	7,492	32,813.6

[a]PM10 is assumed to be equal to particulate emissions.

2.2 CMD Hot Gas Generator Emissions

Feedstock will be dried by transporting the milled material via a hot gas stream. The hot gas stream will be produced by combustion of a mixture of natural gas or clean syngas and the waste CO-rich gas stream from the Rectisol Acid Gas Removal (AGR) Unit in a hot gas generator (one per train). Natural gas will be used during startup.

Emission estimates for the hot gas generators are based on the engineering design of the process in combination with published emission factors. The preliminary engineering design of the hot gas generators has produced exhaust gas concentration estimates for the major constituents: carbon monoxide, nitrogen dioxide, unburned hydrocarbons, and sulfur dioxide. Those concentrations, when combined with the estimated exhaust flow rate from each hot gas generator (5,566 lb-mole/hr) result in mass emission rate estimates as shown in the following example calculation (assuming 14.3 ppm CO in the exhaust).

$$5{,}566 \text{ lb-mole exhaust/hr} \times 14.3 \text{ parts CO}/10^6 \text{ parts exhaust} \times 28 \text{ lbs CO/lb-mole CO} = 2.23 \text{ lb CO/hr}$$

AP-42 emission factors for natural gas combustion have been used for constituents not evaluated in the preliminary engineering design. Based on the expected heat input of each hot gas generator (31 MMBtu/hr), the heating value of the fuel gas (~400 Btu/scf), and a thermal efficiency of 75%, the gas consumption of each hot gas generator will be 0.10 MMscf/hr. Uncontrolled emission factors for natural gas combustion in sources with less than 100 MMBtu/hr heat input were obtained from the EPA's AP-42, Section 1.4. Based on the engineering design of the process, 74% of the hot gas generated in the process will be recirculated for further drying and only about 26% will be exhausted. Therefore, emission estimates based on AP-42 factors (lbs emitted per million standard cubic feet combusted) have been adjusted by 0.26 to reflect only the amount emitted to the atmosphere. In addition, the emission factor for sulfur dioxide has been adjusted to reflect the higher sulfur content of the dryer fuel compared to natural gas. Actual emissions for each hot gas generator are shown in Table 2.2.

Table 2.2
Actual Emissions for One CMD Hot Gas Generator

Pollutant	AP-42 Emission Factor (lb/MMscf)	Emission Rate	
		lb/hr [a]	TPY
Carbon Monoxide	84	2.2	9.8
Sulfur Dioxide	9.2 [b]	0.24	1.1
Nitrogen Oxides	50 [c]	1.3	5.8
Lead	0.0005	1.3×10^{-5}	5.8×10^{-5}
Particulate Matter	7.6	0.2	0.9
Volatile Organic Compounds	5.5	0.2	0.6
Hazardous Air Pollutants (total)	1.89	0.05	0.2

[a]Emission rates reflect 74% control achieved through flue gas recirculation.
[b]The sulfur dioxide emission rate reflects a sulfur content in fuel gas of 0.0053 %mole.
[c]Factor reflects use of low-NOx burners.

Actual and potential emissions from the CMD hot gas generators are expected to be identical except for NO_x. According to the BACT analysis, the use of clean fuels, good design, and good combustion practices are the only mechanisms to reduce criteria pollutant emissions from small gas-fired combustion sources, except for the use of low-NO_x burners (see Section 4.0, BACT Analysis). Actual NO_x emissions are based on use of low-NO_x burner emission factors. Potential (uncontrolled) NO_x emissions would be double the actual emissions if low-NO_x burners were not used in the hot gas generators. Calculations, underlying assumptions, and details concerning specific pollutants are shown in the accompanying Supporting Calculations (see Attachment 2B).

2.3 CMD Gas Stream Recirculation Particulate Emissions

Each CMD train will be equipped with a baghouse through which hot gases used to dry and convey the pulverized feedstock will pass and be recirculated to the CMD gas generators. As discussed above, only about 26% of the recirculated gas stream will be exhausted through each CMD stack. Emission estimates are based on the exhaust flow rate of each hot gas generator (5,566 lb-mole/hr) and the BACT grain loading limit for each baghouse (0.005 gr/dscf). As shown in Part 4 of the Supporting Calculations (Page 2B-4), actual particulate emissions of 0.4 lb/hr are estimated for each CMD stack. Potential emissions are based on the assumption that 100% of the recirculated gas would be emitted through the stack. Combined emissions from the 10 CMD stacks are estimated at 3.97 lb/hr and 17.4 tpy. Total particulate and PM10 are reported as being equivalent.

2.4 CMD Coal and Biomass Filling Vessel Filter Particulate Emissions

The second source of emissions from Coal Milling and Drying will be the fill filters located on the coal and biomass filling vessels. These vessels will displace particulate-laden air as feedstock is passed through them. The displaced air will be vented to the atmosphere through a particulate filter. The assumption is that the filters will achieve a grain loading equal to 0.005 gr/dscf. Because the volume of these vessels has not been specified, the displacement estimate is based on the volume of feedstock that will pass through the vessel.

Based on the expected dry feedstock process rates, ORCF will require seven equivalent trains to process coal and three equivalent trains to process biomass. Utilizing an assumed dense-phase air to coal ratio of 25:1 and dense-phase air to biomass of 7.5:1, displacement air flow rates of 1,688 scfm for coal and 1,865 for biomass have been estimated. As shown in the accompanying Supporting Calculations (see Attachment 2B), these flow rates result in estimated actual particulate emission rates of 0.07 lb/hr and 0.32 tpy from each coal filling vent and 0.08 lb/hr and 0.35 tpy for each biomass filling vent. Because particle size data is not available for this process, total particulate, PM10, and PM2.5 are reported as being equivalent. Potential emission estimates are based on the uncontrolled RACM rate of 0.2 pounds of particulate emissions per ton of feedstock handled.

2.5 Feedstock Processing Emission Summary

Combined emissions from Module 2 – Feedstock Processing are summarized in the accompanying Supporting Calculations (see Attachment 2B). Actual (controlled) particulate emissions from feedstock handling are estimated at 21.2 lb/hr and 92.9 tpy. Potential (uncontrolled) feedstock handling particulate emissions reflecting the expected >99% control efficiencies of the baghouses indicate that hourly emissions could exceed 7,806 lb/hr and annual emissions could reach 34,194 tons.

Actual combustion emissions include carbon monoxide (97.5 tpy), sulfur dioxide (10.6 tpy), nitrogen dioxide (58.0 tpy), VOC (6.4 tpy), lead (0.0006 tpy), and combined Hazardous Air Pollutants (HAP) (2.2 tpy). Potential emission estimates are based on the assumption that there would be no control by flue gas recirculation so 100% of the recirculation gases would be exhausted through the CMD stacks.

The milled and dried feedstock produced in Feedstock Processing will be transported to the gasification process (Module 3) for conversion to syngas.

3.0 SOURCE-SPECIFIC APPLICABLE REGULATIONS

This section presents information concerning applicable state and federal regulations as well as specific exemptions, as appropriate. State regulatory references are to the Ohio Administrative Code (OAC), unless otherwise noted. Source-specific regulations are discussed relative to each permit application module. Facility-wide applicable regulations are addressed in Section 5.1 of the application Introduction.

3.1 State Regulations

3.1.1 Control of Visible Particulate Emissions from Stationary Sources (3745-17-07)

The feedstock processing area contains stationary sources of particulate matter. Stationary sources are subject to Chapter 3745-17-07(A)(1)(a) which limits visible particulate emissions to less than 20% opacity as a six-minute average. Chapter 3745-17-07(A)(1)(b) further states that the 20% opacity limit may not be exceeded for more than six consecutive minutes in any sixty minutes and never shall the opacity exceed 60% as a 6-minute average.

3.1.2 Restrictions on Particulate Emissions from Fuel Burning Equipment (3745-17-10)

This rule applies to sources using fuel combustion to produce heat or power by indirect heat transfer. Transfer of heat through combustion of fuel in the hot gas generators is an indirect form of heat transfer and therefore this rule is applicable.

The rule limits particulate emissions to 0.02 pounds per million Btu of actual heat input. The actual heat input of each hot gas generator is estimated at 31 MMBtu/hr (actual vendor guarantees will be provided when available). Based on this heat input, the allowable particulate emission rate from each hot gas generator will be 0.66 lb/hr. While each hot gas generator is capable of producing an estimated 0.84 lb/hr, actual and potential emissions are estimated at 0.2 lb/hr due to the 76% recirculation of hot gas.

3.1.3 Restrictions on Particulate Emissions from Industrial Processes (3745-17-11)

Operations, processes, and activities which release or may release particulate emissions into the ambient air, with certain exceptions including fuel combustion which is addressed above, are subject to this rule. Allowable particulate emission rates are determined on the basis of process weight at maximum capacity. The following table summarizes allowable emissions for the processes included in Module 2.

Table 3.1.3
Allowable Process Emission Rates

Source	Process Weight (tph)	Allowable Particulate Emission Rate (lb/hr)
Transfer Towers 1 – 4 Baghouses	3,500	94.9
Transfer Tower 5 Baghouse	2,000	86.9
Crusher House Baghouse	5,500	101.8
Silo Baghouse	2,000	86.9
Bunker Baghouse	200	58.5
CMD Baghouse	200	58.5
Hopper Building Baghouse	600	71
Filling Vessel Vent	200	58.5

3.1.4 Permits to Install New Sources (3745-31)

Feedstock processing activities will generate criteria pollutants from material handling and fuel combustion. These emission units are part of a major stationary source. Because the major stationary source is located within an attainment area for all criteria pollutants, according to 3745-31-12(A), each emissions unit is subject to an evaluation of best available control technology (BACT). The BACT analysis for these emission units is provided in Section 4. In accordance with 3745-31-05(A)(3), sources are also required to employ best available technology (BAT). Because all sources and pollutants are addressed in the BACT analysis, BAT is assumed to have been achieved for affected emission units.

3.2 Federal Regulations

3.2.1 NSPS Subpart Ja – Petroleum Refineries After May 14, 2007 (40 CFR 60.100a)

Portions of the ORCF facility will be subject to NSPS Subpart Ja, Petroleum refineries. A precedent exists for this determination in the March 18, 2005 Plan Approval issued by the Pennsylvania Department of Environmental Protection for the WMPI PTY., LLC coal to clean fuels project in Schuylkill County, Mahanoy Township (Plan Approval No. 54-399-034). This rule applies to facilities engaged in producing gasoline, kerosene, distillate fuel oils, residual fuel oils, lubricants, or other products through distillation of petroleum or through redistillation, cracking or reforming of unfinished petroleum derivatives. "Petroleum" is defined as the crude oil removed from the earth and the oils derived from tar sands, shale, and coal. While the term "oil" is not defined, it is assumed to apply to the hydrocarbon wax that is produced through the Fischer-Tropsch process and that is subsequently cracked and reformed to produce F-T diesel, F-T naphtha, and LPG.

Relative to this Module 2 – Feedstock Processing, Subpart Ja applies to the hot gas generators because they meet the definition of "fuel gas combustion devices." Fuel gas is defined as any gas

which is generated at a petroleum refinery and which is combusted. Syngas produced at the plant that is combusted in the hot gas generators meets this definition.

40 CFR 60.102a(g)(1)(ii) limits the hydrogen sulfide content of fuel gas to ≤ 162 ppmv (3-hr rolling avg.) and ≤ 60 ppmv daily (365-day rolling avg.). 40 CFR 60.107a requires that either SO_2 concentrations in stack exhaust or H_2S concentrations in fuel gases prior to combustion be continuously monitored.

3.2.2 NSPS Subpart Y – Coal Processing Plants (40 CFR 60.250)

A coal preparation plant is defined as any facility which prepares coal by one or more of the following processes: breaking, crushing, screening, wet or dry cleaning, and thermal drying. ORCF's process will crush and dry feedstock, including coal. Subpart Y applies to certain affected facilities in coal preparation plants that process more than 200 tons of coal per day. The ORCF coal processing rate is expected to exceed 200 tpd, therefore this rule applies.

The affected facilities at ORCF will be the hot gas generators which function as thermal dryers. According to this rule, particulate emissions from thermal dryer exhaust may not exceed 0.031 gr/dscf and opacity must remain less than 20 percent. In addition, gases which exhibit 20% opacity or greater may not be discharged from any coal processing and conveying equipment, coal storage system, or coal transfer and loading system processing coal.

Stack sampling using 40 CFR 60, Appendix A, Method 5 will be required to demonstrate compliance with this grain loading limit once the facility is operational. Method 9 observations will be required to determine compliance with the opacity limit.

4.0 BACT ANALYSIS

Particulate emissions will be emitted from baghouses or vent filters associated with transfer towers, the crusher houses, silo baghouses, bunkers, and filling vessel filters. Particulate as well as combustion by-products will be emitted from the CMD hot gas generators where clean syngas supplemented by waste CO-rich gas from the AGR unit will be burned.

4.1 Particulate Matter

4.1.1 Available Control Technologies – Particulate Matter

Feedstock Handling Equipment

Feedstock handling activities include moving feedstock within the facility, crushing operations, transfer to storage silos, and transfer to coal and biomass bunkers. Feedstock handling activities addressed here are those accomplished by conveyor belt transport. Control technologies identified in a search of the RACT/BACT/LAER Clearinghouse (RBLC) database for Process Type 90.011 – Coal Handling, Processing, Preparation, and Cleaning include:

- Enclosure of conveyors and transfer points with fabric filter
- Enclosure of conveyors and transfer points
- Wet suppression systems and enclosures, vented to baghouse

CMD Hot Gas Generators

BACT determinations for particulate matter emissions from combustion of clean syngas and waste CO-containing gas streams in coal-drying operations were not located during a search of the RACT, BACT, LAER Clearinghouse (RBLC) database. Similar operations include natural gas-fired dryers. In general, particulate matter controls are not used for natural gas combustion due to the inherently low particulate matter content of gaseous fuels. A search of RBLC for Process Type 13.39 - gaseous fuel and gaseous fuel mixtures used in process heaters $\leq$ 100 MMBtu/hr, located BACT determinations for particulate matter as follow:

RBLC control technologies included:

- Good combustion practice
- Good combustion practice and use of clean gaseous fuel
- Use of low sulfur content fuel
- Proper equipment design and operation, good combustion practices, and use of gaseous fuels

Milling and Drying

The milling and drying operation is designed to dry the pulverized coal during transport by a circulating heated gas. The recirculated gas must be cleaned before it can be reintroduced to the drying process. Control of particulate from process gas streams has traditionally been achieved through use of fabric filters.

Filling Vessel Vents

The fourth component of feedstock processing activities considered in this BACT analysis is particulate matter emissions from transfer of milled feedstock. Milled feedstock will be transferred pneumatically through filling vessels. Pneumatic transfer is an inherently low-emitting source because air-tight seals are required at transfer points. Control of particulate from pneumatic transfer systems has traditionally been achieved through use of fabric filters on the vents that allow for displacement of air from the storage vessels or silos being filled.

4.1.2 Technically Infeasible Options – Particulate Matter

Feedstock Processing Equipment

Wet suppression of feedstock is not considered to be technically feasible for control of particulate matter emissions from feedstock processing equipment. Feedstock will already have been treated with wetting agents or dust suppression chemicals prior to arriving at the facility and after having been placed in the storage pile (see discussion in Module 1). Application of additional wetting agents would increase the energy requirements needed to transport and dry the feedstock prior to the gasification process, may promote conveyor belt slippage, and increase the likelihood of wet fines accumulating around transfer points. Excessive moisture would also adversely affect the cold weather performance of the operation by complicating flow dynamics, adding weight, and reducing conveyor belt cleaning efficiency.

CMD Hot Gas Generators

All of the particulate matter control technologies listed in Section 4.1.1 are technically feasible for particulate matter control from the CMD hot gas generators.

Milling and Drying

Fabric filtration is technically feasible for control of particulate matter emissions from the CMD recirculation gases.

Filling Vessel Vents

Bin vent filters are technically feasible for control of particulate from pneumatic transfer and storage vessels.

4.1.3 Technology Ranking – Particulate Matter

Feedstock Processing Equipment

The following ranking is based on the Ohio EPA RACM guidance document.

- Enclosure of conveyors and transfer points with fabric filter: 99%
- Enclosure of conveyors and transfer points: 70%

CMD Hot Gas Generators

The use of clean fuels and good combustion practices are the only technically feasible control technologies identified. These technologies are commonly used in combination with one another.

Milling and Drying

The use of fabric baghouse filters on process gas streams has been determined as BACT for a variety of operations.

Filling Vessel Vents

The use of bin vent filters on storage silos and vessels associated with pneumatic transfer systems has been determined as BACT for a variety of operations.

4.1.4 Evaluate Most Effective Controls – Particulate Matter

Feedstock Processing Equipment

Use of enclosed conveyors and enclosures at transfer points (transfer towers) equipped with fabric filters is believed to be the most effective technically feasible control technology for particulate matter emissions from feedstock processing equipment.

CMD Hot Gas Generators

The use of clean fuels and good combustion practices is believed to be the most effective technically feasible control technology for particulate matter emissions from the CMD hot gas generators.

Milling and Drying

The use of fabric baghouse filters on the recirculation gas stream is believed to be the most effective technically feasible control technology for milling and drying particulate matter emissions from the CMD stacks.

Filling Vessel Vents

The use of bin vent filters on filling vessels is believed to be the most effective technically feasible control technology for particulate matter emissions from the filling vessel vents.

4.1.5 Proposed BACT Limits and Control Options – Particulate Matter

The following BACT limits are proposed for particulate matter emissions from feedstock processing operations.

Feedstock Processing Equipment

SOURCE	Emission Limit (gr/dscf)
Transfer Tower 1	0.005
Transfer Tower 2	0.005
Transfer Tower 3	0.005
Transfer Tower 4	0.005
Transfer Tower 5	0.005
Coal & Biomass Hopper Building	0.005
Coal Crusher House	0.005
Biomass Crusher House	0.005
Coal Silos 1 & 2	0.005
Coal Silo 3 & 4	0.005
Coal Silo 5 & 6	0.005
Biomass Silos 1 & 2	0.005
Coal Bunker 1	0.005
Coal Bunker 2	0.005
Coal Bunker 3	0.005
Coal Bunker 4	0.005
Coal Bunker 5	0.005
Coal Bunker 6	0.005
Coal Bunker 7	0.005
Biomass Bunker 1	0.005
Biomass Bunker 2	0.005
Biomass Bunker 3	0.005

CMD Hot Gas Generators

Particulate emissions from the hot gas generators will be subject to the NSPS Subpart Y limit of 0.031 gr/dscf for thermal dryers at coal processing plants. Particulate emission estimates indicate that actual emissions will meet this limit.

Milling and Drying

The following BACT limits are proposed for particulate matter emissions from the CMD baghouses.

SOURCE	Emission Limit (gr/dscf)
CMD Baghouse 1	0.005
CMD Baghouse 2	0.005
CMD Baghouse 3	0.005
CMD Baghouse 4	0.005
CMD Baghouse 5	0.005
CMD Baghouse 6	0.005
CMD Baghouse 7	0.005
CMD Baghouse 8	0.005
CMD Baghouse 9	0.005
CMD Baghouse 10	0.005

Filling Vessel Vents

The following BACT limits are proposed for particulate matter emissions from filling vessel vents.

SOURCE	Emission Limit (gr/dscf)
Filling Vessel Vent 1	0.005
Filling Vessel Vent 2	0.005
Filling Vessel Vent 3	0.005
Filling Vessel Vent 4	0.005
Filling Vessel Vent 5	0.005
Filling Vessel Vent 6	0.005
Filling Vessel Vent 7	0.005
Filling Vessel Vent 8	0.005
Filling Vessel Vent 9	0.005
Filling Vessel Vent 10	0.005

4.2 Carbon Monoxide

The only sources of carbon monoxide (CO) emissions from Feedstock Processing are the ten hot gas generators. This section presents the BACT analysis for CO emissions from those sources.

4.2.1 Available Control Technologies – Carbon Monoxide

Carbon monoxide (CO) emissions are due to incomplete combustion that typically results from inadequate air and fuel mixing, a lack of available oxygen, or low temperatures in the combustion zone. Fuel quality and good combustion practices can limit CO emissions. A review of the RBLC database for Process Type 13.39 - gaseous fuel and gaseous fuel mixtures used in process heaters ≤ 100 MMBtu/hr, located BACT determinations for VOC as follow:

- Good combustion practices
- Good design, operation, and good engineering practices
- Proper equipment design and operation, good combustion practices, and use of gaseous fuels

Additional technologies that have been identified include:

- Oxidation Catalyst
- SCONOx™

4.2.2 Technically Infeasible Options – Carbon Monoxide

<u>Oxidation Catalyst</u>

Catalytic oxidation is a post-combustion technology that uses a catalyst to oxidize CO and VOC into CO_2 or H_2O. Catalytic oxidizers are vulnerable to chemicals and/or particulate matter that masks or fouls the surface of the catalyst. The technology has most commonly been applied to natural gas fired combustion turbines. No examples have been found when the technology has been applied to exhaust from a small process heater or dryer. Because of the potential for fouling of the catalyst by particulate and other materials in the exhaust gas, this technology is determined to be technically infeasible for this application.

<u>SCONOx™</u>

SCONOx™ is a proprietary catalytic technology that is discussed in detail for the NO_x BACT analysis and determined to be technically infeasible.

4.2.3 Technology Ranking – Carbon Monoxide

Good design and combustion practices are the only feasible control strategies that have been identified. Good combustion practice has historically been selected as BACT for CO emissions from small process heaters.

4.2.4 Evaluate Most Effective Controls – Carbon Monoxide

Good design and combustion practices are the only feasible control strategies that have been identified. Good combustion practice has historically been selected as BACT for CO emissions from small process heaters.

4.2.5 Proposed BACT Limits and Control Options – Carbon Monoxide

The use of good combustion practices has been selected as BACT for potential CO emissions from the proposed hot gas generators. The BACT limit for CO emissions from each hot gas generator is proposed below. In the absence of an applicable NSPS, the proposed averaging period represents the averaging period associated with the ambient air quality standard for CO.

- Proposed CO BACT Limit: 0.07 lb/MMBtu

This proposed limit is based on the hourly emission rate for one hot gas generator (2.23 lb/hr) divided by the heat input of the unit (31 MMBtu/hr).

4.3 Nitrogen Oxide

The only sources of nitrogen oxides (NO_x) emissions from Feedstock Processing are the ten hot gas generators. This section presents the BACT analysis for NO_x emissions from those sources.

4.3.1 Available Control Technologies – Nitrogen Oxide

The criteria pollutant NO_x is primarily formed in combustion processes in two ways: 1) the reaction of elemental nitrogen and oxygen in the combustion air within the high temperature environment of the combustor (thermal NO_x), and 2) the oxidation of nitrogen contained in the fuel (fuel NO_x). A review of the RBLC database for Process Type 13.39 - gaseous fuel and gaseous fuel mixtures used in process heaters $\leq$ 100 MMBtu/hr, located BACT determinations for NO_x as follow

- Low-NOx burners
- Selective catalytic reduction (SCR)

The following technologies or combinations of technologies have also been used to control NO_x from combustion sources:

- Flue gas recirculation (FGR)
- Selective non-catalytic reduction (SNCR)
- Non-selective catalytic reduction (NSCR)
- SCONOx™
- Low-NOx burner with SCR
- Low-NOx burner with SNCR

4.3.2 Technically Infeasible Options – Nitrogen Oxide

Selective Catalytic Reduction

Selective catalytic reduction is a post-combustion NO_x control technology that uses ammonia or urea to react with NO_x to form nitrogen and water. As the name implies, a catalyst is needed to accelerate the reduction of NO_x to nitrogen gas and water. The applicability of the technology is limited to sources that have flue gas temperatures that are appropriate for catalytic reduction, as well as space for catalyst beds large enough to provide the residence time needed for the reaction to occur. Several different catalysts formulations make the temperature window fairly wide: from about 350 to over 1,000 °F. Because the hot gas generators will generate a gas stream that exits the mill at between 212 and 230 °F, additional heat input would be required to increase the flue gas temperature to the required operating range for SCR to be effective. That increase in temperature would in turn produce additional NO_x emissions. SCR is therefore considered to be technically infeasible for control of NO_x from the hot gas generators.

Selective Non-Catalytic Reduction

Selective non-catalytic reduction is a post-combustion NO_x control technology that uses ammonia or urea to react with NO_x to form nitrogen and water. As the name implies, a catalyst is not needed. The technology requires that the reagent and the exhaust gas are uniformly mixed within a narrow temperature range (1,600 to 2,100 °F). No examples have been found where SNCR has been applied to small thermal dryers or process heaters. Because the hot gas generators will generate a gas stream that exits the mill at between 212 and 230 °F, additional heat input would be required to increase the flue gas temperature to the required operating range. That increase in temperature would in turn produce additional NO_x emissions. SCNR is therefore considered to be technically infeasible for control of NO_x from the hot gas generators.

Non-Selective Catalytic Reduction

Nonselective catalytic reduction (NSCR) uses a catalyst without injected reagents to reduce NO_x emissions in an exhaust gas stream. NSCR is typically used in automobile exhaust and rich-burn stationary internal combustion engines. NSCR uses a platinum/rhodium catalyst and is only

effective in a stoichiometric or fuel-rich environment where the combustion gas is nearly depleted of oxygen. This type of environment does not exist in the hot gas generator exhaust, therefore, NSCR is not technologically feasible for this application.

SCONOx™

SCONOx™ is a proprietary catalytic oxidation and adsorption technology that uses a single catalyst for the control of NO_x, CO, and VOC emissions. Unlike SCR, the SCONOx™ system does not use ammonia. Instead, the SCONOx™ system uses a coated catalyst to oxidize nitrogen oxide (NO) to nitrogen dioxide (NO_2) and to adsorb NO_2 onto the coating on the catalyst. The SCONOx™ system can operate effectively at temperatures ranging from 280 to 750 °F but it sensitive to trace amounts of sulfur in the exhaust. SCONOx™ is not considered technically feasible for this application because the operating temperature exceeds the hot gas generator exhaust range and the exhaust gas may have residual sulfur content that would adversely affect performance.

4.3.3 Technology Ranking – Nitrogen Oxide

Technically feasible NO_x control options for the hot gas generators are ranked here according to expected potential emission reductions.

- Low-NO_x burner and Flue Gas Recirculation 75%
- Flue Gas Recirculation 50 – 60%
- Low-NO_x burner 30 – 60%

4.3.4 Evaluate Most Effective Controls – Nitrogen Oxide

The most effective control for NO_x emissions from the hot gas generators is expected to be use of low-NO_x burners with flue gas recirculation in the hot gas generators.

4.3.5 Proposed BACT Limits and Control Options – Nitrogen Oxide

Low-NO_x burners with flue gas recirculation have been selected as BACT for potential NO_x emissions from the proposed hot gas generators. The BACT limit for NOx emissions from each hot gas generator is proposed below.

- Proposed NO_x BACT Limit: 0.043 lb/MMBtu

This proposed limit is based on the hourly emission rate for one hot gas generator (1.32 lb/hr) divided by the heat input of the unit (31 MMBtu/hr).

4.4 Volatile Organic Compounds

The only sources of volatile organic compound (VOC) emissions from Feedstock Processing are the ten hot gas generators. This section presents the BACT analysis for VOC emissions from those sources.

4.4.1 Available Control Technologies – Volatile Organic Compounds

Volatile Organic Compound (VOC) emissions are due to incomplete combustion that typically results from inadequate air and fuel mixing, a lack of available oxygen, or low temperatures in the combustion zone. Fuel quality and good combustion practices can limit VOC emissions. A review of the RBLC database for Process Type 13.39 - gaseous fuel and gaseous fuel mixtures used in process heaters ≤ 100 MMBtu/hr, located BACT determinations for VOC as follow:

- Good combustion practices
- Good design, operation, and good engineering practices
- Proper equipment design and operation, good combustion practices, and use of gaseous fuels

Additional technologies that have been identified include:

- Oxidation Catalyst
- SCONOx™

4.4.2 Technically Infeasible Options – Volatile Organic Compounds

<u>Oxidation Catalyst</u>

Catalytic oxidation is a post-combustion technology that uses a catalyst to oxidize CO and VOC into CO_2 or H_2O. Catalytic oxidizers are vulnerable to chemicals and/or particulate matter that masks or fouls the surface of the catalyst. The technology has most commonly been applied to natural gas fired combustion turbines. No examples have been found when the technology has been applied to exhaust from a small process heater or dryer. Because of the low potential VOC emissions from use of the hot gas generators and the potential for fouling of the catalyst by particulate and other materials in the exhaust gas, this technology is determined to be technically infeasible for this application.

<u>SCONOx™</u>

SCONOx™ is a proprietary catalytic technology that was discussed in detail for the NO_x BACT analysis and determined to be technically infeasible.

4.4.3 Technology Ranking – Volatile Organic Compounds

Good design and combustion practices are the only feasible control strategies that have been identified. Good combustion practice has historically been selected as BACT for VOC emissions from small process heaters.

4.4.4 Evaluate Most Effective Controls – Volatile Organic Compounds

Good design and combustion practices are the only feasible control strategies that have been identified. Good combustion practice has historically been selected as BACT for VOC emissions from small process heaters.

4.4.5 Proposed BACT Limits and Control Options – Volatile Organic Compounds

The use of good combustion practices has been selected as BACT for potential VOC emissions from the proposed hot gas generators. The BACT limit for VOC emissions from each hot gas generator is proposed below. In the absence of an applicable NSPS, the proposed averaging period represents the averaging period associated with the ambient air quality standard for ozone.

- Proposed VOC BACT Limit: 0.005 lb/MMBtu

This proposed limit is based on the hourly emission rate for one hot gas generator (0.15 lb/hr) divided by the heat input of the unit (31 MMBtu/hr).

4.5 Sulfur Dioxide

The only sources of sulfur dioxide (SO_2) emissions from Feedstock Processing are the ten hot gas generators. This section presents the BACT analysis for SO_2 emissions from those sources.

4.5.1 Available Control Technologies – Sulfur Dioxide

Sulfur dioxide (SO_2) emissions are due to combustion of sulfur present in fuel. The control of SO_2 emissions is most directly related to using low sulfur fuel. SO_2 emissions may also be controlled using post-combustion strategies in some processes. A review of the RBLC database for Process Type 13.39 - gaseous fuel and gaseous fuel mixtures used in process heaters $\leq$ 100 MMBtu/hr, located BACT determinations for SO_2 as follow:

- Combustion of low-sulfur fuel
- Various fuel sulfur limits (%)

An additional technology that has been used to control SO_2 emissions includes:

- Flue Gas Desulfurization

4.5.2 Technically Infeasible Options – Sulfur Dioxide

Flue Gas Desulfurization

Flue Gas Desulfurization (FGD) is a post-combustion SO_2 control technology that reacts an alkaline solution with SO_2 in the exhaust gas. FGD systems are more readily applied to high SO_2 concentration gas streams than low concentrations. No examples of FGD units used to control SO_2 emissions from small gaseous fuel-fired process heaters or dryers have been found. FGD technology is therefore determined to be technically infeasible for the proposed application.

4.5.3 Technology Ranking – Sulfur Dioxide

The use of low-sulfur fuels is the only technically feasible SO_2 control technology identified for the proposed hot gas generators.

4.5.4 Evaluate Most Effective Controls – Sulfur Dioxide

The use of low-sulfur fuels is the only technically feasible SO_2 control technology identified for the proposed hot gas generators.

4.5.5 Proposed BACT Limits and Control Options – Sulfur Dioxide

The use of low sulfur fuels (CO-rich gas exhaust, syngas, and natural gas) is selected as BACT for SO_2 emissions from the proposed hot gas generators. The proposed BACT limit for each hot gas generator is presented below.

- Proposed SO_2 BACT Limit: 0.0077 lb/MMBtu (24-hour average)

This proposed limit is based on the hourly emission rate for one hot gas generator (0.24 lb/hr) divided by the heat input of the unit (31 MMBtu/hr).

ATTACHMENT 2A
MODULE 2
FIGURES

EPA-R5-2019-006986_0000088

\\SVR-PITT\CADD\PROJECTS\2006\061-933\DWG\061933-ENV4-2.DWG (FIG 5) (LCOLAIZZI) - DEC 11, 2007 - 15:12:10

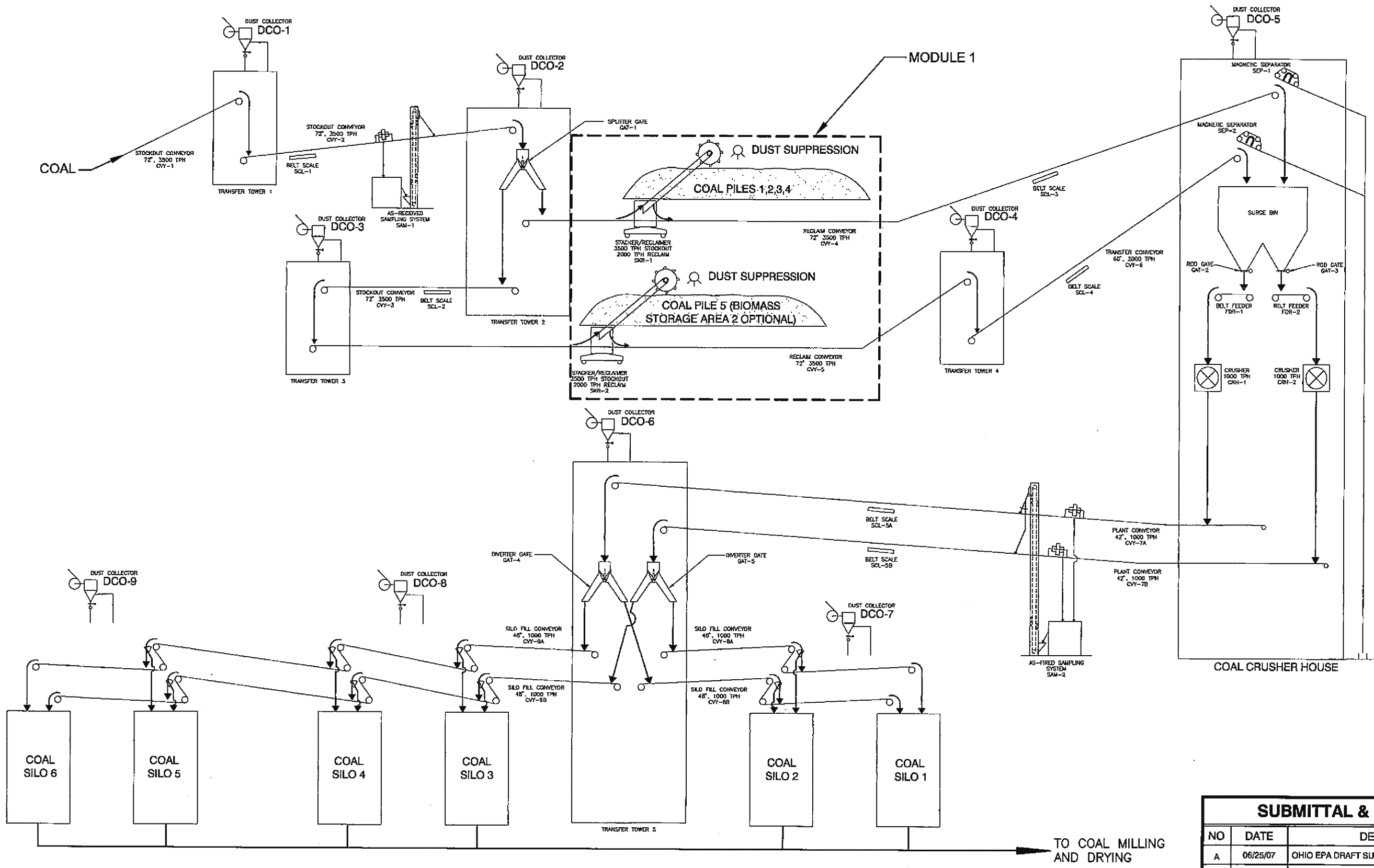

REFERENCE:
DRAWING PREPARED BY BLACK & VEATCH, TITLED: "COAL HANDLING FLOW DIAGRAM", FIGURE 5-2, PROJECT NUMBER: 146116-DS-1005 REV. A.

SUBMITTAL & REVISION RECORD

NO	DATE	DESCRIPTION
A	06/25/07	OHIO EPA DRAFT SUBMISSION, DRAWING: 061933-FIGURE 4A.DWG
B	12/17/07	AIR PERMIT APPLICATION

Civil & Environmental Consultants, Inc.
333 Baldwin Road - Pittsburgh, PA 15205-9072
412-429-2324 · 800-365-2324
www.cecinc.com

OHIO RIVER CLEAN FUELS, LLC
PROPOSED COAL TO LIQUID FUEL PLANT
COLUMBIANA AND JEFFERSON COUNTY
WELLSVILLE, OHIO

MODULE 2 - FEEDSTOCK PROCESSING
COAL DELIVERY SYSTEM

APPROVED:		PROJECT NO:	061-933.0002
DRAWN BY: DWD/LKC	CHKD BY: DJL	DWG SCALE: N.T.S.	DATE: 11/13/07

FIGURE NO: 5

EPA-R5-2019-006986_0000088

\\SVR-PITT\CADD\PROJECTS\2006\061-933\DWG\061933-ENV4-2.DWG {FIG 6} (LCOLAIZZI) ~ DEC 13, 2007 - 10:13:21

SUBMITTAL & REVISION RECORD

NO	DATE	DESCRIPTION
A	06/25/07	OHIO EPA DRAFT SUBMISSION, DRAWING: 061933-FIGURE 4B.DWG
B	12/17/07	AIR PERMIT APPLICATION

COAL MILLING/DRYING

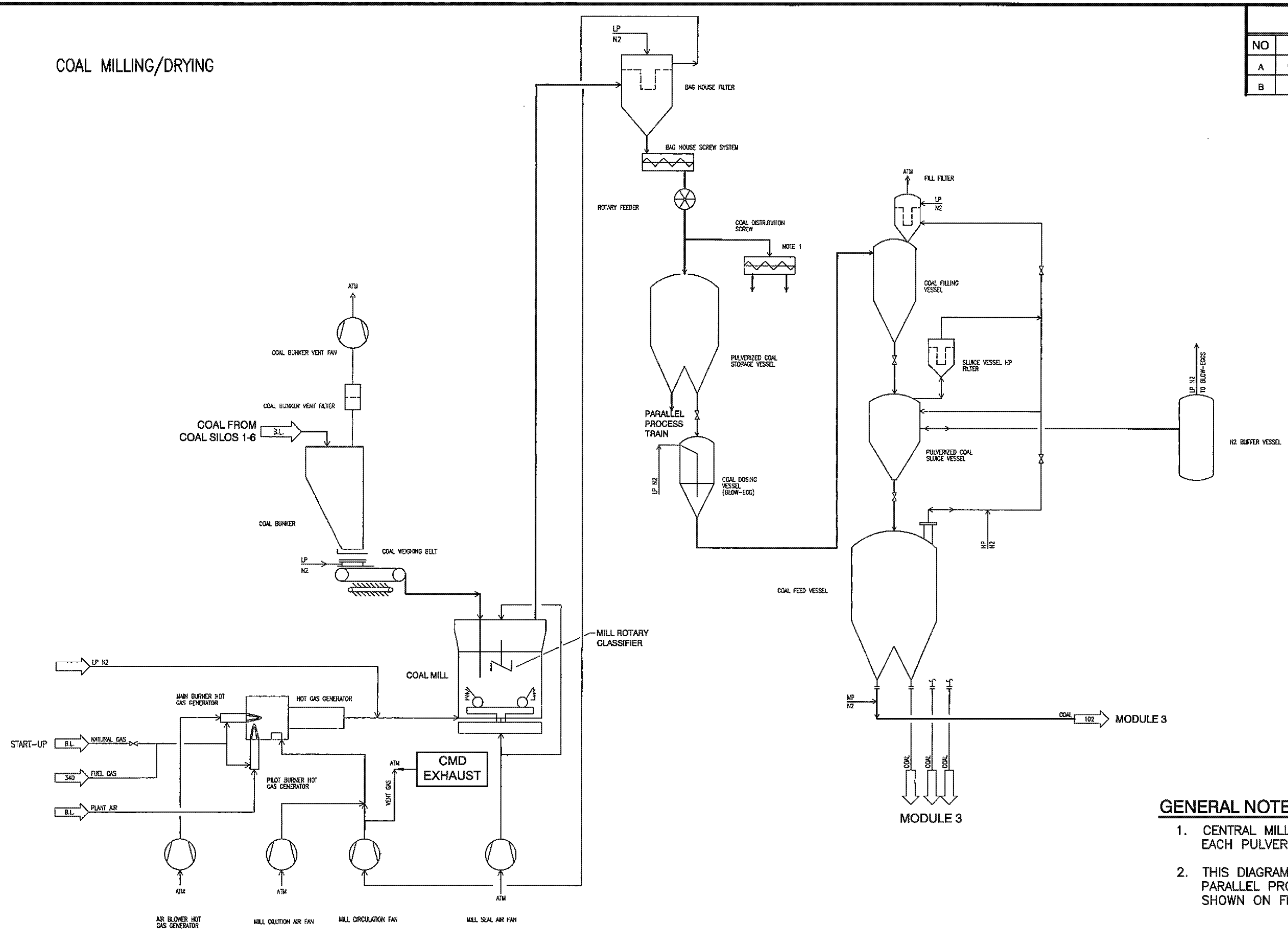

GENERAL NOTES

1. CENTRAL MILL HAS TWO COAL DISTRIBUTION SCREWS TO EACH PULVERIZED COAL STORAGE VESSEL.
2. THIS DIAGRAM REPRESENTS ONE OF SEVEN IDENTICAL PARALLEL PROCESS TRAINS FED BY THE SIX COAL SILOS SHOWN ON FIGURE 5.

REFERENCE:
DRAWING PREPARED BY UHDE, TITLED: "PROCESS FLOW DIAGRAM NO. 101 COAL MILLING AND DRYING COAL FEEDING", PROJECT NUMBER: 01-7369-600.

Civil & Environmental Consultants, Inc.
333 Baldwin Road - Pittsburgh, PA 15205-9072
412-429-2324 · 800-365-2324
www.cecinc.com

OHIO RIVER CLEAN FUELS, LLC
PROPOSED COAL TO LIQUID FUEL PLANT
COLUMBIANA AND JEFFERSON COUNTY
WELLSVILLE, OHIO

MODULE 2 - FEEDSTOCK PROCESSING
COAL MILLING AND DRYING

APPROVED:				PROJECT NO: 061-933.0002	FIGURE NO: 6
DRAWN BY: DWD/LKC	CHKD BY: DJL	DWG SCALE: N.T.S.		DATE: 11/13/07	

EPA-R5-2019-006986_0000088

\\SVR-PITT\CADD\PROJECTS\2006\061-933\DWG\061933-ENV4-2.DWG {FIG 7} (LCOLAIZZI) - DEC 11, 2007 - 15:18:20

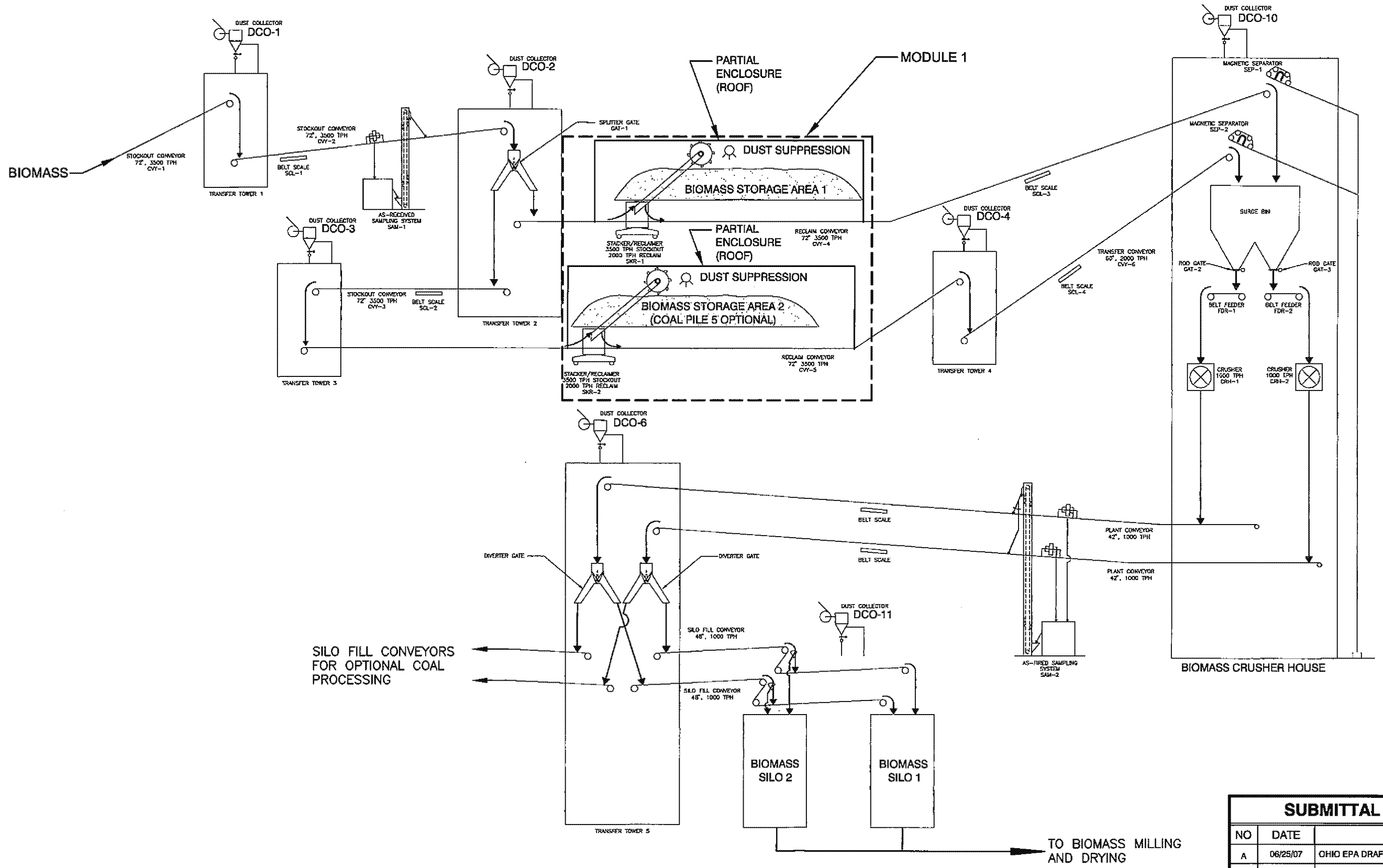

REFERENCE:
DRAWING PREPARED BY BLACK & VEATCH, TITLED: "COAL HANDLING FLOW DIAGRAM", FIGURE 5-2, PROJECT NUMBER: 146116-DS-1005 REV. A.

SUBMITTAL & REVISION RECORD

NO	DATE	DESCRIPTION
A	06/25/07	OHIO EPA DRAFT SUBMISSION, DRAWING: 061933-FIGURE 4A.DWG
B	12/17/07	AIR PERMIT APPLICATION

Civil & Environmental Consultants, Inc.
333 Baldwin Road - Pittsburgh, PA 15205-9072
412-429-2324 - 800-365-2324
www.cecinc.com

OHIO RIVER CLEAN FUELS, LLC
PROPOSED COAL TO LIQUID FUEL PLANT
COLUMBIANA AND JEFFERSON COUNTY
WELLSVILLE, OHIO

MODULE 2 - FEEDSTOCK PROCESSING
BIOMASS DELIVERY SYSTEM

APPROVED:		PROJECT NO: 061-933.0002	FIGURE NO: 7
DRAWN BY: DWD/LKC	CHKD BY: DJL	DWG SCALE: N.T.S.	DATE: 11/13/07

EPA-R5-2019-006986_0000088

\\SVR-PITT\CADD\PROJECTS\2006\061-933\DWG\061933-ENV4-2.DWG {FIG 8} (LCOLAIZZI) - DEC 11, 2007 - 15:27:54

SUBMITTAL & REVISION RECORD

NO	DATE	DESCRIPTION
A	06/25/07	OHIO EPA DRAFT SUBMISSION, DRAWING: 061933-FIGURE 4B.DWG
B	12/17/07	AIR PERMIT APPLICATION

GENERAL NOTES

1. CENTRAL MILL HAS TWO BIOMASS DISTRIBUTION SCREWS TO EACH PULVERIZED BIOMASS STORAGE VESSEL.
2. THIS DIAGRAM REPRESENTS ONE OF THREE IDENTICAL PARALLEL PROCESS TRAINS FED BY THE TWO BIOMASS SILOS SHOWN ON FIGURE 7.

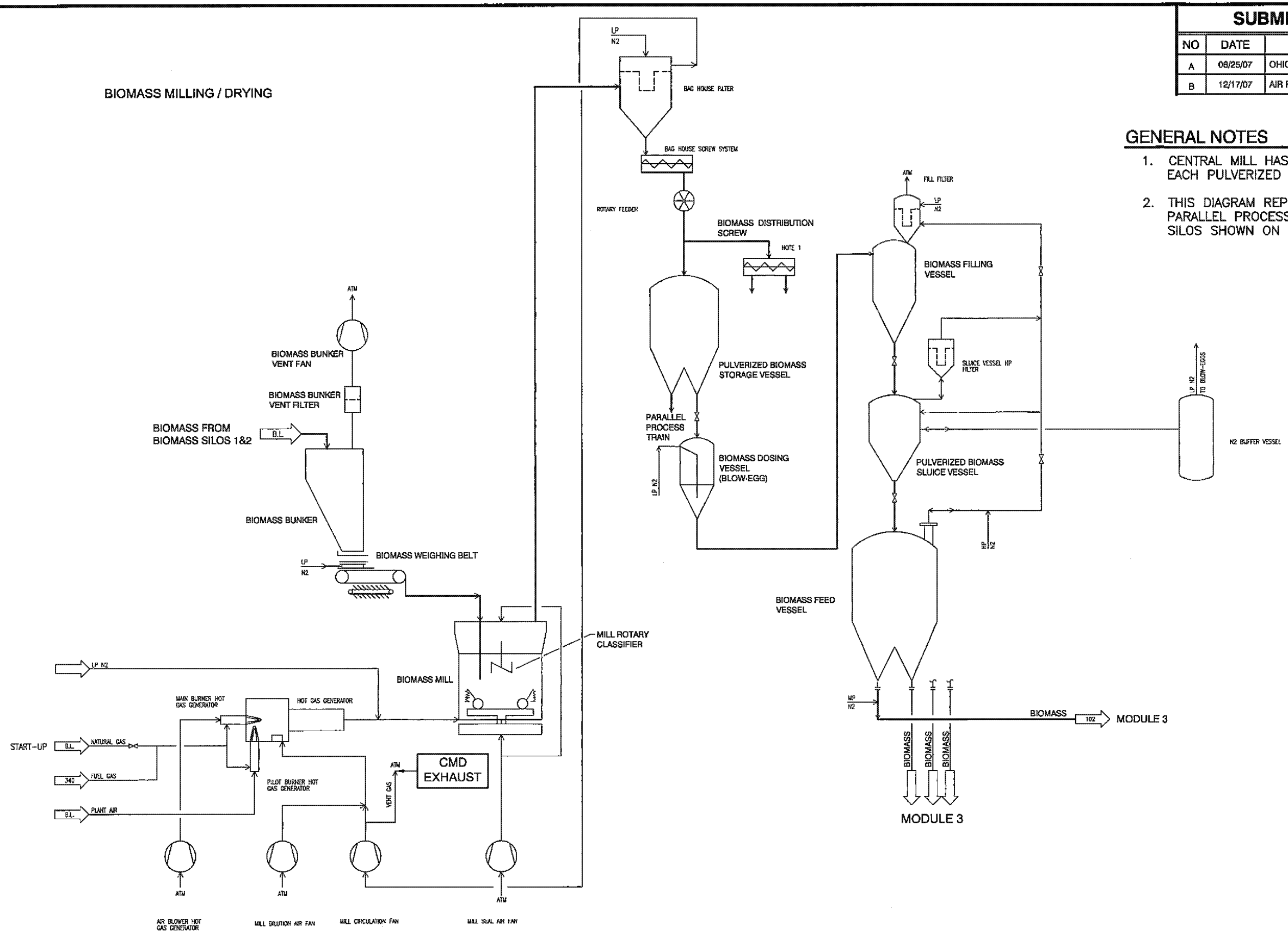

REFERENCE:
DRAWING PREPARED BY UHDE, TITLED: "PROCESS FLOW DIAGRAM NO. 101 COAL MILLING AND DRYING COAL FEEDING", PROJECT NUMBER: 01-7369-600.

Civil & Environmental Consultants, Inc.
333 Baldwin Road - Pittsburgh, PA 15205-9072
412-429-2324 · 800-365-2324
www.cecinc.com

OHIO RIVER CLEAN FUELS, LLC
PROPOSED COAL TO LIQUID FUEL PLANT
COLUMBIANA AND JEFFERSON COUNTY
WELLSVILLE, OHIO

MODULE 2 - FEEDSTOCK PROCESSING
BIOMASS MILLING AND DRYING

APPROVED:				PROJECT NO: 061-933.0002	FIGURE NO: 8
DRAWN BY: DWD/LKC	CHKD BY: DJL	DWG SCALE: N.T.S.		DATE: 11/13/07	

SUBMITTAL & REVISION RECORD

NO	DATE	DESCRIPTION
A	06/25/07	OHIO EPA DRAFT SUBMISSION, DRAWING: 061933-FIGURE 4C.DWG
B	12/17/07	AIR PERMIT APPLICATION

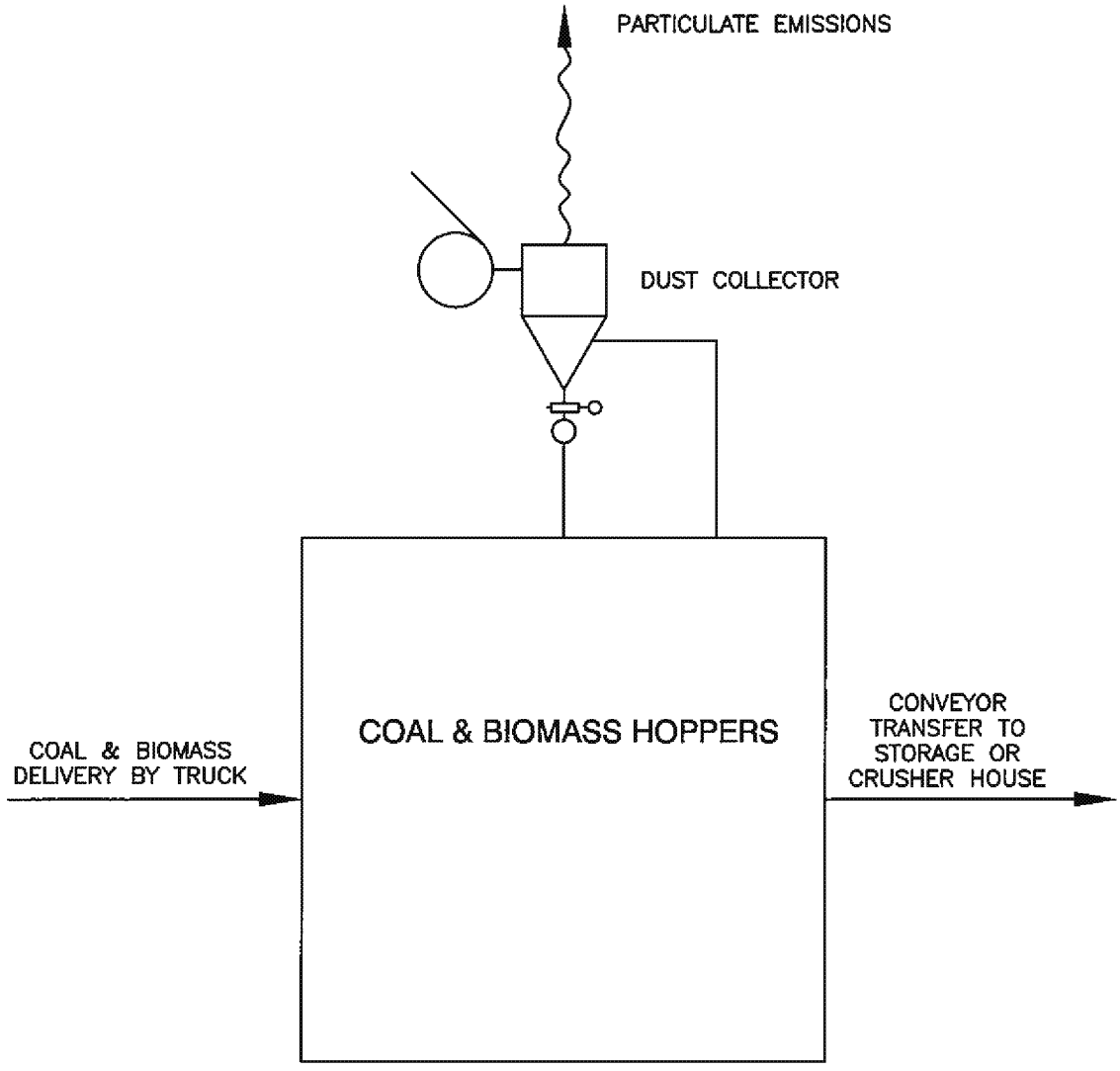

Civil & Environmental Consultants, Inc.
333 Baldwin Road - Pittsburgh, PA 15205-9072
412-429-2324 - 800-365-2324
www.cecinc.com

OHIO RIVER CLEAN FUELS, LLC
PROPOSED COAL TO LIQUID FUEL PLANT
COLUMBIANA AND JEFFERSON COUNTY
WELLSVILLE, OHIO

MODULE 2 - FEEDSTOCK PROCESSING
COAL & BIOMASS HOPPERS

APPROVED:		PROJECT NO: 061-933.0002	FIGURE NO: 9
DRAWN BY: DWD/LKC	CHKD BY: DJL	DWG SCALE: N.T.S.	DATE: 11/13/07

\\SVR-PITT\CADD\PROJECTS\2006\061-933\DWG\061933-ENV4-2.DWG {FIG 9} (LCOLAIZZI) - DEC 11, 2007 - 15:31:20

ATTACHMENT 2B
MODULE 2
SUPPORTING CALCULATIONS

Supporting Calculations

Part 1: Particulate Emissions from Feedstock Handling Baghouses

Emission estimates are based on the assumed exhaust rate of the baghouse and the BACT grain loading limit.

Source	Air Flow (acfm)	PE/PM10 Emission Rate (gr/dscf)	Actual (Controlled) PE/PM10 Emissions (lb/hr)	(TPY)	Feedstock Transfer Rate (tons/hr)	Potential (Uncontrolled) PE/PM10 Emissions (lb/hr)	(TPY)
Transfer Tower 1	21,000	0.005	0.90	3.9	3,500	700	3,066
Transfer Tower 2	21,000	0.005	0.90	3.9	3,500	700	3,066
Transfer Tower 3	21,000	0.005	0.90	3.9	3,500	700	3,066
Transfer Tower 4	21,000	0.005	0.90	3.9	3,500	700	3,066
Transfer Tower 5	21,000	0.005	0.90	3.9	2,000	400	1,752
Coal Crusher House (transfers)	27,000	0.005	1.16	5.1	5,500	1,100	4,818
Coal Crusher House (crushing)	actual emissions are included under "transfers"				2,000	40	175
Biomass Crusher House (transfers)	27,000	0.005	1.16	5.1	5,500	1,100	4,818
Biomass Crusher House (crushing)	actual emissions are included under "transfers"				2,000	40	175
Coal Silos 1 & 2	16,000	0.005	0.69	3.0	2,000	400	1,752
Coal Silos 3 & 4	20,000	0.005	0.86	3.8	2,000	400	1,752
Coal Silos 5 & 6	20,000	0.005	0.86	3.8	2,000	400	1,752
Biomass Silos 1 & 2	20,000	0.005	0.86	3.8	2,000	400	1,752
Coal Bunker 1	10,000	0.005	0.43	1.9	200	40	175
Coal Bunker 2	10,000	0.005	0.43	1.9	200	40	175
Coal Bunker 3	10,000	0.005	0.43	1.9	200	40	175
Coal Bunker 4	10,000	0.005	0.43	1.9	200	40	175
Coal Bunker 5	10,000	0.005	0.43	1.9	200	40	175
Coal Bunker 6	10,000	0.005	0.43	1.9	200	40	175
Coal Bunker 7	10,000	0.005	0.43	1.9	200	40	175
Biomass Bunker 1	10,000	0.005	0.43	1.9	200	40	175
Biomass Bunker 2	10,000	0.005	0.43	1.9	200	40	175
Biomass Bunker 3	10,000	0.005	0.43	1.9	200	40	175
		Totals	**14.36**	**62.9**		**7,480**	**32,762**

Assumptions

Assume gas flow temperature is 68 °F and low moisture: no correction needed from acfm to scfm.
Assume the particulate emissions from baghouse are all PM10.
Potential transfer emissions are based on the OEPA RACM (Table 2.19-2) transfer rate of 0.2 lb/ton
Crusher house potential emissions are based on the OEPA RACM (Table 2.19-2) primary crushing rate of 0.02 lb/ton (at 2,000 tph) plus the transfer rate of 0.20 lb/ton (at 5,500 tph).
Feedstock transfer rates are based on rated capacities of equipment for PTE calculations.

Supporting Calculations

Part 2: Particulate Emissions from Coal & Biomass Hopper Building

Emission estimates based on the Ohio EPA RACM guidance (Table 2.19-2) factor of 0.02 lb/ton for truck loading.

Source	Handling Rate (tpd)	PE/PM10 Emission Rate (lb/ton)	Actual (Controlled) PE/PM10 Emissions (lb/hr)	Actual (Controlled) PE/PM10 Emissions (TPY)	Potential (Uncontrolled) PE/PM10 Emissions (lb/hr)	Potential (Uncontrolled) PE/PM10 Emissions (TPY)
Coal Hopper	7,200	0.02	0.06	0.26	6.00	26.3
Biomass Hopper	7,200	0.02	0.06	0.26	6.00	26.3
Totals:			0.12	0.53	12.00	52.56

Assumptions

Assume process is continuous

Assume 99% control efficiency for enclosure and baghouse (RACM Guidance, Table 2.19-3)

Supporting Calculations

Part 3: Combustion Emissions from CMD Hot Gas Generators

The preliminary engineering design of exhaust gas composition and flow rate for one Hot Gas Generator are shown below. These estimates have been used as the basis for the AP-42 emission estimates that follow.

Pollutant	Exhaust Stream Composition (ppm)	MW (lb/lb-mole)	Potential Emissions (Uncontrolled) lb/hr	TPY	
Carbon Monoxide	14.30	28	2.23	9.8	
Sulfur Dioxide	0.64	64	0.23	1.0	
Nitrogen Dioxide	8.70	46	2.23	9.8	
Unburned Hydrocarbons	3.00	16	0.27	1.2	(as methane)

Assumptions

Unburned hydrocarbons are presented as ethane equivalents.
Exhaust flow rate from each CMD dryer is 5,566 lb-mole/hr
lb pollutant/hr = lb-mole exhaust/hr x ppm pollutant x lb pollutant/lb-mole

The estimates shown above do not account for all products of combustion, therefore AP-42 emission factors for natural gas combustion (Section 1.4) are used below to estimate additional pollutant emissions.

Pollutant	Emission Factor (lb/MMscf)	Total Exhaust lb/hr	Actual Emissions (Controlled) lb/hr	TPY	Potential Emissions (Uncontrolled) lb/hr	TPY
Carbon Monoxide	84	8.5932	2.23	9.75	8.59	37.64
Sulfur Dioxide	9.1671	0.94	0.24	1.06	0.94	4.11
Nitrogen Dioxide	100 (50)	10.23	1.32	5.80	10.23	44.81
Lead	0.0005	5.12E-05	1.32E-05	5.80E-05	5.12E-05	2.24E-04
PE, PM10	7.6	0.78	0.20	0.88	0.78	3.41
VOC	5.5	0.56	0.15	0.64	0.56	2.46
HAPs						
Total POM	8.80E-05	9.00E-06	2.33E-06	1.02E-05	9.00E-06	3.94E-05
benzene	2.10E-03	2.15E-04	5.56E-05	2.44E-04	2.15E-04	9.41E-04
dichlorobenzene	1.20E-03	1.23E-04	3.18E-05	1.39E-04	1.23E-04	5.38E-04
formaldehyde	7.50E-02	7.67E-03	1.99E-03	8.70E-03	7.67E-03	3.36E-02
hexane	1.80E+00	1.84E-01	4.77E-02	2.09E-01	1.84E-01	8.07E-01
naphthalene	6.10E-04	6.24E-05	1.62E-05	7.08E-05	6.24E-05	2.73E-04
toluene	3.40E-03	3.48E-04	9.01E-05	3.95E-04	3.48E-04	1.52E-03
arsenic	2.00E-04	2.05E-05	5.30E-06	2.32E-05	2.05E-05	8.96E-05
beryllium	1.20E-05	1.23E-06	3.18E-07	1.39E-06	1.23E-06	5.38E-06
cadmium	1.10E-03	1.13E-04	2.91E-05	1.28E-04	1.13E-04	4.93E-04
chromium	1.40E-03	1.43E-04	3.71E-05	1.62E-04	1.43E-04	6.27E-04
cobalt	8.40E-05	8.59E-06	2.23E-06	9.75E-06	8.59E-06	3.76E-05
manganese	3.80E-04	3.89E-05	1.01E-05	4.41E-05	3.89E-05	1.70E-04
mercury	2.60E-04	2.66E-05	6.89E-06	3.02E-05	2.66E-05	1.16E-04
nickel	2.10E-03	2.15E-04	5.56E-05	2.44E-04	2.15E-04	9.41E-04
selenium	2.40E-05	2.46E-06	6.36E-07	2.79E-06	2.46E-06	1.08E-05
Total HAPs			**5.00E-02**	**2.19E-01**	**1.93E-01**	**8.46E-01**

Supporting Calculations

Part 3: Combustion Emissions from CMD Hot Gas Generators (cont.)

Combined Emissions from the 7 Coal and 3 Biomass Hot Gas Generators

Pollutant	Actual Emissions lb/hr	Actual Emissions TPY	Potential Emissions lb/hr	Potential Emissions TPY
Carbon Monoxide	22.3	97.5	85.9	376.4
Sulfur Dioxide	2.4	10.6	9.4	41.1
Nitrogen Dioxide	13.2	58.0	102.3	448.1
Lead	1.3E-04	5.8E-04	5.1E-04	2.2E-03
PE, PM10	2.0	8.8	7.8	34.1
VOC	1.5	6.4	5.6	24.6
HAPs	0.5	2.2	1.9	8.5

Assumptions for AP-42 Derivation of CMD Exhaust Emissions

The hot gas generator heating duty specified by process modeling is: 279 MMBtu/hr
Each individual hot gas generator will supply 11% of the total heat input: 31 MMBtu/hr
Assume that all ten hot gas generators will operate at full capacity 8,760 hrs/yr (PTE)
The heating value of the combined syngas and CO2/CO recycle from Rectisol is: 400 Btu/scf
Assume thermal efficiency of hot gas generator is: 75%
Therefore, gas volume required is 31 MMBtu/hr/400 Btu/scf = 0.1023 MMscf/hr
Sulfur Dioxide emissions assume a fuel sulfur content of: 30,557 gr/MMscf (0.0053% mole)
Actual nitrogen oxide emissions shown above assume use of low-NO_x burners to reduce emissions by 50%.
Assume that 74% of exhaust is recirculated using flue gas recirculation (FGR) to continue the drying process.
Gas volume vented (%): 25.9
Actual emissions of NOx assume use of low-NOx burners plus FGR per BACT determination.

Derivation of exhaust flow rate from each hot gas generator:

Given:	CMD Gas Flow (per train):	5,566 lb-mole/hr
	Molar Volume at 60 °F:	385.3 dscf/lb-mole
	Exhaust Temperature:	250 °F
	Moisture Content:	nil
Then:	Gas Flow (each generator):	35,743 dscfm
		48,071 acfm

Part 4: Particulate Matter Emissions from CMD Baghouse Recirculation

Emission estimates are based on the gas flow through the CMD train and the BACT limit for the baghouse.

Derivation of PE emissions from each hot gas generator stack:

Given:	CMD Gas Flow (per train):	5,566 lb-mole/hr
	Molar Volume at 60 °F:	385.3 dscf/lb-mole
	Baghouse grain loading:	0.005 gr/dscf
	Gas volume vented:	25.9 %

Then: Emission Rate = lb-mole/hr x dscf/lb-mole x gr/dscf x lb/7,000 gr x gas volume vented (%)

Emission Rate = 0.40 lb/hr (each CMD stack)
1.74 tpy (each CMD stack)

Uncontrolled Emission Rate Assumes 100% of gas volume is vented (no recirculation)

1.53 lb/hr (each CMD stack)
6.71 tpy (each CMD stack)

Summary (10 CMD Stacks)

Actual Emissions lb/hr	Actual Emissions TPY	Potential Emissions lb/hr	Potential Emissions TPY
3.97	17.38	15.32	67.09

Supporting Calculations

Part 5: Particulate Matter Emissions from CMD Coal (1-7) & Biomass (8-10) Filling Vessel Filters

Emission estimates based on the displacement of air from the filling vessels and the BACT grain loading limit.

Source	Air Flow (acfm)	Air Flow (scfm)	PE/PM10 Emission Rate (gr/dscf)	Actual (Controlled) PE/PM10 Emissions (lb/hr)	Actual (Controlled) PE/PM10 Emissions (TPY)	Potential (Uncontrolled) PE/PM10 Emissions (lb/hr)	Potential (Uncontrolled) PE/PM10 Emissions (TPY)
Filling Vessel Vent 1	2,149	1,688	0.005	0.07	0.32	41.7	183
Filling Vessel Vent 2	2,149	1,688	0.005	0.07	0.32	41.7	183
Filling Vessel Vent 3	2,149	1,688	0.005	0.07	0.32	41.7	183
Filling Vessel Vent 4	2,149	1,688	0.005	0.07	0.32	41.7	183
Filling Vessel Vent 5	2,149	1,688	0.005	0.07	0.32	41.7	183
Filling Vessel Vent 6	2,149	1,688	0.005	0.07	0.32	41.7	183
Filling Vessel Vent 7	2,149	1,688	0.005	0.07	0.32	41.7	183
Filling Vessel Vent 8	2,375	1,865	0.005	0.08	0.35	41.7	183
Filling Vessel Vent 9	2,375	1,865	0.005	0.08	0.35	41.7	183
Filling Vessel Vent 10	2,375	1,865	0.005	0.08	0.35	41.7	183
		Totals		**0.75**	**3.27**	**291.7**	**1,278**

Assumptions for Filling Vessel Vent Calculations

Ten parallel trains will process equal portions of feedstock (7 for coal & 3 for biomass).

Each train processes 5,000 tons/day =	6,944	lb/min
Milled feedstock is pneumatically conveyed in dense-phase.		
Assumed ratio of air:coal in dense-phase transport is 25:1		
Temperature of transported feedstock =	100	°C
Coal density =	84	lb/cf
Coal volume transported =	82.7	cfm
Gas flow volume therefore =	2,066.8	cfm
Combined flow rate (coal + gas) =	2,149	cfm
Assumed ratio of air:biomass in dense-phase transport is 7.5:1		
Biomass density =	25	lb/cf
Biomass volume transported =	277.8	cfm
Gas flow volume therefore =	2,097.2	cfm
Combined flow rate (biomass + gas) =	2,375	cfm

Feedstock is dry, therefore moisture correction from acfm to scfm is negligible.

Potential emissions are based on the OEPA RACM (Table 2.19-2) transfer rate of 0.2 lb/ton

Supporting Calculations

Summary: Combined Actual and Potential Feedstock Processing Emissions

PE/PM10 Summary	Actual (Controlled) (lb/hr)	Actual (Controlled) (TPY)	Potential (Uncontrolled) (lb/hr)	Potential (Uncontrolled) (TPY)
1. Transfer Towers (5)	4.5	19.7	3,200	14,016
2. Coal Crusher House	1.2	5.1	1,140	4,993
3. Biomass Crusher House	1.2	5.1	1,140	4,993
4. Coal Silos (6)	2.4	10.5	1,200	5,256
5. Biomass Silos (2)	0.9	3.8	400	1,752
6. Coal Bunkers (7)	3.0	13.1	280	1,226
7. Biomass Bunkers (3)	1.3	5.6	120.0	525.6
8. Coal Hopper	0.1	0.3	6.0	26.3
9. Biomass Hopper	0.1	0.3	6.0	26.3
10. CMD Hot Gas Generators (10)	6.0	26.2	23.1	101.1
11. CMD Filling Vessel Filters (10)	0.7	3.3	291.7	1,278
Total PE/PM10/PM2.5	21.2	92.9	7,806.8	34,193.6
Other Criteria Pollutants and HAPs				
10. CMD Hot Gas Generators (10) other pollutants				
Carbon Monoxide	22.3	97.5	85.9	376.4
Sulfur Dioxide	2.4	10.6	9.4	41.1
Nitrogen Dioxide	13.2	58.0	102.3	448.1
Lead	1.32E-04	5.80E-04	5.1E-04	2.2E-03
VOC	1.5	6.4	5.6	24.6
HAPs	0.5	2.2	1.9	8.5

ATTACHMENT 2C
MODULE 2
DOCUMENTATION

LIST OF REFERENCES

- Ohio EPA, Reasonably Available Control Measures (RACM) Guidance Manual, Section 2-19 – *Coal Processing Plants*, Table 2.19-2: *Fugitive Dust Emission Factors for Coal Processing Plants.*
- Pennsylvania DEP, Plan Approval No. 54-399-034 (WMPI PTY., LLC Coal To Clean Fuels Project, Schuylkill County, PA), March 18, 2009.
- U.S. EPA, AP-42 Section 1.4 – *Natural Gas Combustion*, July 1998.
- U.S. EPA, RACT/BACT/LAER Clearinghouse (RBLC); website: http://cfpub.epa.gov/RBLC

RBLC Matching Facilities for Search Criteria:
Permit Date Between 1/1/1997 and 12/9/2007
And Process Type "90.011" Coal Handling, Processing, Preparation, and Cleaning Activities
Pollutant: Particulate Matter

RBLCID	FACILITYNAME	PROCESSNAME	THRUPUT	THRUPUT UNIT	PROCESSNOTES	CTRLDESC	EMISLIMIT1	EMISLIMIT1 UNIT	EMISLIMIT1AVGTIMECONDITION
*IA-0067	MIDAMERICAN ENERGY COMPANY	ROTARY CAR DUMPER	3500	TONS/HR		BAGHOUSE	0.005	GR/DSCF	
*IA-0067	MIDAMERICAN ENERGY COMPANY	ROTARY CAR DUMPER	3500	TONS/HR		BAGHOUSE	0.005	GR/DSCF	
*IA-0067	MIDAMERICAN ENERGY COMPANY	SILOS	900	TONS/HR	The throughput is based on the load-in rate. There are 6 silos (3 east & 3 west). Each silo is 900 tons/hr The 3 east silos vent through 1 stack and the 3 west silos vent through one stack. Each stack has the same control and same BACT emission rates.	BAGHOUSE	0.005	GR/DSCF	
*IA-0067	MIDAMERICAN ENERGY COMPANY	SILOS	900	TONS/HR	The throughput is based on the load-in rate. There are 6 silos (3 east & 3 west). Each silo is 900 tons/hr The 3 east silos vent through 1 stack and the 3 west silos vent through one stack. Each stack has the same control and same BACT emission rates.	BAGHOUSE	0.005	GR/DSCF	
*IA-0067	MIDAMERICAN ENERGY COMPANY	TRANSFER CONVEYING BAY	1800	TONS/HR		BAGHOUSE	0.005	GR/DSCF	
*IA-0067	MIDAMERICAN ENERGY COMPANY	TRANSFER CONVEYING BAY	1800	TONS/HR		BAGHOUSE	0.005	GR/DSCF	
*IA-0067	MIDAMERICAN ENERGY COMPANY	TRANSFER HOUSE 2	3500	TONS/HR		BAGHOUSE	0.005	GR/DSCF	3 H
*IA-0067	MIDAMERICAN ENERGY COMPANY	TRANSFER HOUSE 2	3500	TONS/HR		BAGHOUSE	0.005	GR/DSCF	
*IA-0067	MIDAMERICAN ENERGY COMPANY	TRANSFER HOUSE 4	3600	TONS/HR		BAGHOUSE	0.005	GR/DSCF	
*IA-0067	MIDAMERICAN ENERGY COMPANY	TRANSFER HOUSE 4	3600	TONS/HR		BAGHOUSE	0.005	GR/DSCF	
*IA-0067	MIDAMERICAN ENERGY COMPANY	ACTIVE COAL PILE	311155	SQ FT		CHEMICAL DUST SUPPRESSANT			LESS THAN
*IA-0067	MIDAMERICAN ENERGY COMPANY	ACTIVE COAL PILE	311155	SQ FT		CHEMICAL DUST SUPPRESSANT			LESS THAN
*IA-0067	MIDAMERICAN ENERGY COMPANY	BUCKET RECLAIM				CHEMICAL DUST SUPPRESSANT			LESS THAN
*IA-0067	MIDAMERICAN ENERGY COMPANY	BUCKET RECLAIM				CHEMICAL DUST SUPPRESSANT			LESS THAN
*IA-0067	MIDAMERICAN ENERGY COMPANY	INACTIVE COAL STORAGE PILE	1196459	SQ FT		CHEMICAL DUST SUPPRESSANT			
*IA-0067	MIDAMERICAN ENERGY COMPANY	INACTIVE COAL STORAGE PILE	1196459	SQ FT		CHEMICAL DUST SUPPRESSANT			
*IA-0067	MIDAMERICAN ENERGY COMPANY	RAIL UNLOADING				CHEMICAL DUST SUPPRESSANT			VENDOR GUARANTEE
*IA-0067	MIDAMERICAN ENERGY COMPANY	RAIL UNLOADING				CHEMICAL DUST SUPPRESSANT			SEE NOTE BELOW
*IA-0067	MIDAMERICAN ENERGY COMPANY	RAIL UNLOADING COAL STOCKOUT PILE	28224	SQ FT		CHEMICAL DUST SUPPRESSANT			SEE NOTE BELOW
*IA-0067	MIDAMERICAN ENERGY COMPANY	RAIL UNLOADING COAL STOCKOUT PILE	28224	SQ FT		CHEMICAL DUST SUPPRESSANT			REDUCTION OF SILT LOAD ON PAVED ROADS
*IA-0067	MIDAMERICAN ENERGY COMPANY	STACKER CONVEYOR				CHEMICAL DUST SUPPRESSANT			REDUCTION OF SILT LOADING ON PAVED ROADS
*IA-0067	MIDAMERICAN ENERGY COMPANY	STACKER CONVEYOR				CHEMICAL DUST SUPPRESSANT			
*IA-0067	MIDAMERICAN ENERGY COMPANY	TRANSFER TO ACTIVE PILE				CHEMICAL DUST SUPPRESSANT			
*IA-0067	MIDAMERICAN ENERGY COMPANY	TRANSFER TO ACTIVE PILE				CHEMICAL DUST SUPPRESSANT			LESS THAN
*IA-0086	UNIVERSITY OF NORTHERN IOWA	COAL SYSTEM - BUNKER #3 SILO	27.4	lbs/hr		BAGHOUSE	0.005	GR/DSCF	
*IA-0086	UNIVERSITY OF NORTHERN IOWA	COAL SYSTEM - BUNKER #3 SILO	27.4	lbs/hr		BAGHOUSE	0.005	GR/DSCF	BACT
*IA-0086	UNIVERSITY OF NORTHERN IOWA	COAL PILE	50565	tons	THERE ARE 2 PROCESS PERMITS ASSOCIATED WITH THE COAL PILE - COAL PILE RECEIVING AND COAL PILE RECLAIM. BOTH EMISSION UNITS ARE CONSIDERED FUGITIVE.	DUST SUPPRESSANT	95	%	
*IA-0086	UNIVERSITY OF NORTHERN IOWA	COAL PILE	50565	tons	THERE ARE 2 PROCESS PERMITS ASSOCIATED WITH THE COAL PILE - COAL PILE RECEIVING AND COAL PILE RECLAIM. BOTH EMISSION UNITS ARE CONSIDERED FUGITIVE.	DUST SUPPRESSANT	95	%	

EPA-R5-2019-006986_0000088

RBLC Matching Facilities for Search Criteria:
Permit Date Between 1/1/1997 and 12/9/2007
And Process Type "90.011" Coal Handling, Processing, Preparation, and Cleaning Activities
Pollutant: Particulate Matter

RBLCID	FACILITYNAME	PROCESSNAME	THRUPUT	THRUPUT UNIT	PROCESSNOTES	CTRLDESC	EMISLIMIT1	EMISLIMIT1 UNIT	EMISLIMIT1AVGTIMECONDITION
*IA-0086	UNIVERSITY OF NORTHERN IOWA	COAL PILE - TRAFFIC	50565	tons	THERE ARE TWO EMISSION UNITS ASSOCIATED WITH THIS PROCESS AND THEY ARE: COAL PILE - TRUCK TRAFFIC AND COAL PILE - FRONT END LOADER TRAFFIC. BOTH UNITS HAVE THE SAME EMISSION LIMITS AND ARE FUGITIVE.	DUST SUPPRESSANT	80	%	
*IA-0086	UNIVERSITY OF NORTHERN IOWA	COAL PILE - TRAFFIC	50565	tons	THERE ARE TWO EMISSION UNITS ASSOCIATED WITH THIS PROCESS AND THEY ARE: COAL PILE - TRUCK TRAFFIC AND COAL PILE - FRONT END LOADER TRAFFIC. BOTH UNITS HAVE THE SAME EMISSION LIMITS AND ARE FUGITIVE.	DUST SUPPRESSANT	80	%	3-H AV
*IA-0089	HOMELAND ENERGY SOLUTIONS, LLC, PN 06-672	GASIFIER COAL FEED BINS, S14 (07-A-959P)	15	tons	THE GASIFIER COAL FEED BINS ARE USED AS STORAGE FOR FEEDING THE GASIFICATION PROCESS	BAGHOSUE	0.005	GR/DSCF	
*IA-0089	HOMELAND ENERGY SOLUTIONS, LLC, PN 06-672	GASIFIER COAL FEED BINS, S14 (07-A-959P)	15	tons	THE GASIFIER COAL FEED BINS ARE USED AS STORAGE FOR FEEDING THE GASIFICATION PROCESS	BAGHOUSE	0.005	GR/DSCF	BACT
*IA-0089	HOMELAND ENERGY SOLUTIONS, LLC, PN 06-672	COAL STORAGE SILOS, S15 (07-A-960P)	5000	tons	THROUGHPUT IS ALSO 200 TONS PER HOUR	BAGHOUSE	0.005	GR/DSCF	AVERAGE OF 3 RUNS
*IA-0089	HOMELAND ENERGY SOLUTIONS, LLC, PN 06-672	COAL STORAGE RECLAIM SILO, S16 (07-A-961P)	5000	tons	THIS IS USED TO STORE COAL	BAGHOUSE	0.005	GR/DSCF	
*IA-0089	HOMELAND ENERGY SOLUTIONS, LLC, PN 06-672	COAL STORAGE RECLAIM SILO, S16 (07-A-961P)	5000	tons	THIS IS USED TO STORE COAL	BAGHOUSE	0.005	GR/DSCF	HOURLY MAXIMUM
*IA-0089	HOMELAND ENERGY SOLUTIONS, LLC, PN 06-672	COAL STORAGE SILOS, S15 (07-A-960P)	5000	tons	THROUGHPUT IS ALSO 200 TONS PER HOUR	BAGHOUSE	0.005	GR/DSCF	METHOD 5+202
*IA-0089	HOMELAND ENERGY SOLUTIONS, LLC, PN 06-672	COAL RECEIVING AND HANDLING, S12 (07-A-958P)	200	T/H	THIS IS THE UNLOADING AND STORAGE OF COAL AT THE FACILITY.	BAGHOUSE AND WATER FOGGING	0.005	GR/DSCF	
*IA-0089	HOMELAND ENERGY SOLUTIONS, LLC, PN 06-672	COAL RECEIVING AND HANDLING, S12 (07-A-958P)	200	T/H	THIS IS THE UNLOADING AND STORAGE OF COAL AT THE FACILITY.	BAGHOUSE WATER FOGGING	0.005	GR/DSCF	
*ND-0024	SPIRITWOOD STATION	COAL HANDLING	85.3	T/H	DRIED OR RAW LIGNITE	BAGHOUSE	0.005	GR/DSCF	3 H
*OK-0118	HUGO GENERATING STA	MATERIAL HANDLING				FABRIC FILTER BAGHOUSE	0.01	GR/DSCF	
AR-0074	PLUM POINT ENERGY	MATERIAL HANDLING, COAL, BAGHOUSES			process covers transfer house, tripper deck conveyor, reclaim transfer #3.	BAGHOUSES	0.1	LB/H	LESS THAN
AR-0074	PLUM POINT ENERGY	MATERIAL HANDLING, COAL, PARTIALLY INCLOSED			THESE SOURCES CONSIST OF BARGE UNLOADING, and COAL TRANSFER CONVEYORS.	PARTIAL ENCLOSURES	0.1	LB/H	EACH
AR-0074	PLUM POINT ENERGY	MATERIAL HANDLING, COAL, SUPPRESSION			THESE SOURCES CONSIST OF RAILCAR UNLOADING, COAL STORAGE PILES, and coal storage pile transfer	WATER SPRAYS, DUST SUPPRESSANTS, ETC	0.1	LB/H	
AR-0082	ARKANSAS LIME COMPANY	COAL/COKE BIN VENT, SN-33Q #3				DUST COLLECTOR	0.015	GR/DSCF	
CO-0047	HOLNAM, FLORENCE	RECLAIMING, CONVEYING, & TRANS COAL TO COAL SCREEN			AIRS ID 103 C. PERMIT MODIFICATION TRIGGERED BACT REVIEW OF CO ONLY. PM LIMITS IN STANDARD EMISSION UNITS NOT AVAILABLE.	BAGHOUSE. PERMIT MODIFICATION TRIGGERED BACT REVIEW OF CO ONLY. PM LIMITS IN STANDARD EMISSION UNITS NOT AVAILABLE.	0.19	T/YR	
CO-0047	HOLNAM, FLORENCE	RECLAIMING, CONVEYING, & TRANS COAL TO COAL SCREEN			AIRS ID 103 C. PERMIT MODIFICATION TRIGGERED BACT REVIEW OF CO ONLY. PM LIMITS IN STANDARD EMISSION UNITS NOT AVAILABLE.	BAGHOUSE. PERMIT MODIFICATION TRIGGERED BACT REVIEW OF CO ONLY. PM LIMITS IN STANDARD EMISSION UNITS NOT AVAILABLE.	0.19	T/YR	
CO-0047	HOLNAM, FLORENCE	SCREENING AND CRUSHING OVERSIZE COAL			PERMIT MODIFICATION TRIGGERED BACT REVIEW OF CO ONLY. PM LIMITS IN STANDARD EMISSION UNITS NOT AVAILABLE.	BAGHOUSE. PERMIT MODIFICATION TRIGGERED BACT REVIEW OF CO ONLY. PM LIMITS IN STANDARD EMISSION UNITS NOT AVAILABLE.	0.19	T/YR	
CO-0047	HOLNAM, FLORENCE	SCREENING AND CRUSHING OVERSIZE COAL			PERMIT MODIFICATION TRIGGERED BACT REVIEW OF CO ONLY. PM LIMITS IN STANDARD EMISSION UNITS NOT AVAILABLE.	BAGHOUSE. PERMIT MODIFICATION TRIGGERED BACT REVIEW OF CO ONLY. PM LIMITS IN STANDARD EMISSION UNITS NOT AVAILABLE.	0.19	T/YR	

EPA-R5-2019-006986_0000088

RBLC Matching Facilities for Search Criteria:
Permit Date Between 1/1/1997 and 12/9/2007
And Process Type "90.011" Coal Handling, Processing, Preparation, and Cleaning Activities
Pollutant: Particulate Matter

RBLCID	FACILITYNAME	PROCESSNAME	THRUPUT	THRUPUT UNIT	PROCESSNOTES	CTRLDESC	EMISLIMIT1	EMISLIMIT1 UNIT	EMISLIMIT1AVGT IMECONDITION
CO-0047	HOLNAM, FLORENCE	TRANS & CONVEYING - CRUSHED COAL TO TRANSFER TOWER			AIRS ID 103 E. PERMIT MODIFICATION TRIGGERED BACT REVIEW OF CO ONLY. PM LIMITS IN STANDARD EMISSION UNITS NOT AVAILABLE.	BAGHOUSE. PERMIT MODIFICATION TRIGGERED BACT REVIEW OF CO ONLY. PM LIMITS IN STANDARD EMISSION UNITS NOT AVAILABLE.	0.02	T/YR	AVG OF 3 TEST RUNS
CO-0047	HOLNAM, FLORENCE	TRANS & CONVEYING - CRUSHED COAL TO TRANSFER TOWER			AIRS ID 103 E. PERMIT MODIFICATION TRIGGERED BACT REVIEW OF CO ONLY. PM LIMITS IN STANDARD EMISSION UNITS NOT AVAILABLE.	BAGHOUSE. PERMIT MODIFICATION TRIGGERED BACT REVIEW OF CO ONLY. PM LIMITS IN STANDARD EMISSION UNITS NOT AVAILABLE.	0.02	T/YR	AVG OF 3 TEST RUNS
CO-0047	HOLNAM, FLORENCE	TRANSFER, COAL, TRANSFER TOWER TO SILO			AIRS ID 105. PERMIT MODIFICATION TRIGGERED BACT REVIEW OF CO ONLY. PM LIMITS IN STANDARD EMISSION UNITS NOT AVAILABLE.	BAGHOUSE. PERMIT MODIFICATION TRIGGERED BACT REVIEW OF CO ONLY. PM LIMITS IN STANDARD EMISSION UNITS NOT AVAILABLE.	0.02	T/YR	LESS THAN
CO-0047	HOLNAM, FLORENCE	TRANSFER, COAL, TRANSFER TOWER TO SILO			AIRS ID 105. PERMIT MODIFICATION TRIGGERED BACT REVIEW OF CO ONLY. PM LIMITS IN STANDARD EMISSION UNITS NOT AVAILABLE.	BAGHOUSE. PERMIT MODIFICATION TRIGGERED BACT REVIEW OF CO ONLY. PM LIMITS IN STANDARD EMISSION UNITS NOT AVAILABLE.	0.02	T/YR	LESS THAN
CO-0047	HOLNAM, FLORENCE	UNLOADING & CONVEYING, COAL TO STOCKPILE			AIRS ID 103 A. PM EMISSIONS NOT SUBJECT TO BACT ANALYSIS, STANDARD EMISSON UNITS NOT AVAILABLE.	NEG PRESSURE AND BAGHOUSE. STANDARD EMISSION UNITS NOT AVAILABLE.	1.94	T/YR	
CO-0047	HOLNAM, FLORENCE	UNLOADING & CONVEYING, COAL TO STOCKPILE			AIRS ID 103 A. PM EMISSIONS NOT SUBJECT TO BACT ANALYSIS, STANDARD EMISSON UNITS NOT AVAILABLE.	NEG PRESSURE AND BAGHOUSE. STANDARD EMISSION UNITS NOT AVAILABLE.	1.85	T/YR	PM fugitive
CO-0047	HOLNAM, FLORENCE	COAL STOCKPILE				SURFACE MOISTURE	0.45	T/YR	see note
CO-0047	HOLNAM, FLORENCE	COAL STOCKPILE				SURFACE MOISTURE	0.33	T/YR	see note
CO-0055	LAMAR LIGHT & POWER POWER PLANT	COAL HANDLING AND PREPARATION	150	T/H	CRUSHING, HANDLING, STORAGE FOR COMBUSTION IN CALCULATING FLUIDIZED BED BOILER	HIGH EFFICIENCY FABRIC FILTER BAGHOUSES	0.02	LB/T	
CO-0057	COMANCHE STATION	COAL HANDLING AND STORAGE			COAL HANDLING ADDRESSED ON PERMIT 04PB1017. INCLUDES OPEN STORAGE PILE (WITH LOWERING WELL), RAIL-CAR UNLOADING, TRANSFER FROM UNLOADING TO PILE, TRANSFER FROM PILE TO BUNKERS.	CONTROL INCLUDES WATER SPRAYS, LOWER WELL, DUST SUPPRESSANT, ENCLOSURES AND BAGHOUSES WHERE FEASIBLE.	0.01	GR/DSCF	baghouse
CO-0057	COMANCHE STATION	COAL HANDLING AND STORAGE			COAL HANDLING ADDRESSED ON PERMIT 04PB1017. INCLUDES OPEN STORAGE PILE (WITH LOWERING WELL), RAIL-CAR UNLOADING, TRANSFER FROM UNLOADING TO PILE, TRANSFER FROM PILE TO BUNKERS.	CONTROLS INCLUDE USE OF WATER SPRAYS, LOWERING WELL, DUST SUPPRESSANTS, ENCLOSURES AND BAGHOUSES WHERE FEASIBLE.	0.01	GR/DSCF	
FL-0139	SUWANNEE AMERICAN CEMENT COMPANY, INC.	COAL MILL				BAGHOUSE	0.01	GR/DSCF	
FL-0139	SUWANNEE AMERICAN CEMENT COMPANY, INC.	COAL MILL				BAGHOUSE	0.01	GR/DSCF	
IA-0057	CARGILL, INC	COAL DUMPING SHED			PERMIT NUMBER: 88-A-134-S3	FABRIC FILTER. STANDARD EMISSION LIMIT CALCULATED FROM PERMIT PROCESS DATA. BASIS OF LIMIT : OTHER - NAAQS	1.541	LB/H	
IA-0057	CARGILL, INC	COAL BUNKER III-CUSTOM FABRICATED			PERMIT NUMBER: 87-A-003-S3	FABRIC FILTER. STANDARD EMISSION LIMIT ESTIMATED FROM PERMIT PROCESS DATA.	0.129	LB/H	
IA-0057	CARGILL, INC	COAL CONVEYING ASPIRATION			PERMIT NO: 86-A-133-S3	FABRIC FILTER. STANDARD EMISSION LIMIT ESTIMATED FROM PERMIT PROCESS DATA.	0.6	LB/H	
IA-0057	CARGILL, INC	COAL BUNKER I			PERMIT NUMBER: 83-A-115-S3	FABRIC FILTER. STANDARD EMISSION UNITS ESTIMATED USING PERMIT PROCESS DATA. BASIS OF LIMIT: OTHER (NAAQS)	0.129	LB/H	

EPA-R5-2019-006986_0000088

RBLC Matching Facilities for Search Criteria:
Permit Date Between 1/1/1997 and 12/9/2007
And Process Type "90.011" Coal Handling, Processing, Preparation, and Cleaning Activities
Pollutant: Particulate Matter

RBLCID	FACILITYNAME	PROCESSNAME	THRUPUT	THRUPUT UNIT	PROCESSNOTES	CTRLDESC	EMISLIMIT1	EMISLIMIT1 UNIT	EMISLIMIT1AVGT IMECONDITION
IA-0057	CARGILL, INC	COAL BUNKER II-CUSTOM FABRICATED			PERMIT NO. 83-A-116-S3	FABRIC FILTERS. STANDARD EMISSION LIMIT ESTIMATED FROM PERMIT PROCESS DATA.	0.129	LB/H	
IN-0081	LONE STAR INDUSTRIES, INC.	CEMENT MANUFACTURING, COAL MILL	40	T/YR	THROUGHPUT IN TONS OF COAL PER HOUR, ALSO 313,550 TONS/YR, EMISSION POINT FF 2-11	FABRIC FILTER	0.01	GR/DSCF	
IN-0118	IRON DYNAMICS, INC. (IDI)	COAL DRYER	25	mmbtu/h	UNIT PROCESSES 60 T/H OF COAL	BAGHOUSE	0.01	GR/DSCF	
IN-0119	AUBURN NUGGET	COAL CAR UNLOADING	165	T/H		BAGHOUSE	0.0052	GR/DSCF	
IN-0119	AUBURN NUGGET	COAL DRYERS	33	T (COAL)/H	THERMAL RATING 36 MMBTU/H	BAGHOUSE	0.01	GR/DSCF	
IN-0119	AUBURN NUGGET	COAL DRYERS	33	T (COAL)/H	THERMAL RATING 36 MMBTU/H	BAGHOUSE	0.015	GR/DSCF	
KY-0084	THOROUGHBRED GENERATING STATION	COAL HANDLING AND STORAGE			coal handing and storage: 12 machine points, with capacities between 2000 t/h and 500 t/h.	ENCLOSURES/PARTIAL ENCLOSURES, BAGHOUSE, BIN FILTERS, LOW-PRESSURE DROP AND TELESCOPIC CHUTES	99	% REDUCTI	3-H AV
LA-0122	MANSFIELD MILL	COAL STORAGE AND HANDLING	452016	T/YR	EMISSION POINT 17-93	UNLOADED TO COVER CONVEYOR, PULVERIZER INSIDE BUILDING	0.59	LB/H	
LA-0202	RODEMACHER BROWNFIELD UNIT 3	CAR DUMP	3000	T/H	INCLUDES PET COKE.	ENCLOSED SYSTEM	0.9	LB/H	3-H AV
LA-0202	RODEMACHER BROWNFIELD UNIT 3	FUEL STOCKOUT PILE DROP POINT	1500	T/H	ALSO INCLUDES PET COKE.	LOWERING TUBE	0.69	LB/H	LESS THAN
LA-0202	RODEMACHER BROWNFIELD UNIT 3	FUEL RECLAIM HOPPERS-DROP POINT	750	T/H	ALSO INCLUDES PET COKE.	SLIGHT NEGATIVE PRESSURE FROM CONVEYOR TUNNEL VENTILATION	0.07	LB/H	
MN-0061	ERIE NUGGET	COAL & FLUX UNLOADING	4000000	DSCF	COAL MUST BE UNLOADED INSIDE A STRUCTURE.	FF	0.005	GR/DSCF	
MN-0061	ERIE NUGGET	COAL & FLUX UNLOADING	4000000	DSCF	COAL MUST BE UNLOADED INSIDE A STRUCTURE.	FF	0.005	GR/DSCF	
MN-0061	ERIE NUGGET	COAL PULVERIZER #1	36	MMBTU/H		FF	0.01	GR/DSCF	
MN-0061	ERIE NUGGET	COAL PULVERIZER #1	36	MMBTU/H		FF	0.015	GR/DSCF	
MN-0061	ERIE NUGGET	COAL PULVERIZER #2	9	MMBTU/H		FF	0.01	GR/DSCF	
MN-0061	ERIE NUGGET	COAL PULVERIZER #2	9	MMBTU/H		FF	0.015	GR/DSCF	
MT-0009	COLSTRIP ENERGY LIMITED PARTNERSHIP	ELECTRIC GENERATION, MATERIAL TRANSFER	0		MATERIAL TRANSFER/HANDLING INCLUDES:COAL TRUCK UNLOADING; COAL CRUSHING, SCREENING AND TRANSFER; COAL STORAGE; LIMESTONE TRUCK UNLOADING, HANDLING AND STORAGE; FLYASH CONVEYING AND STORAGE; BEDASH CONVEYING AND STORAGE.	BAGHOUSE	6	LB/H	AVERAGE OF 3 RUNS
MT-0022	BULL MOUNTAIN, NO. 1, LLC - ROUNDUP POWER PROJECT	MATERIAL TRANSFER, COAL HANDLING TRANSFER POINTS				DUST SUPPRESSION SYSTEMS AND ENCLOSURES. BAGHOUSE	0.01	GR/DSCF	3-H AV
MT-0022	BULL MOUNTAIN, NO. 1, LLC - ROUNDUP POWER PROJECT	ACTIVE COAL STORAGE PILE				WIND FENCE AND DUST SUPPRESSION; WORK PRACTICE LIMITS	98	% REDUCTION	
MT-0022	BULL MOUNTAIN, NO. 1, LLC - ROUNDUP POWER PROJECT	INACTIVE COAL STORAGE PILE				WIND FENCE, DUST SUPPRESSION, PILE COMPACTION	98	% REDUCTION	
MT-0027	HARDIN GENERATOR PROJECT	MATERIAL TRANSFER, COAL HANDLING TRANSFER POINTS				DUST SUPPRESSION SYSTEMS AND ENCLOSURES, VENTED TO BAGHOUSE	0.01	GR/DSCF	3-H AV
ND-0020	RICHARDTON PLANT	COAL HANDLING	27	T/H		BAGHOUSE	0.004	GR/DSCF	3 HOUR AVERAGE
ND-0021	GASCOYNE GENERATING STATION	COAL HANDLING	400	T/H		BAGHOUSES	0.005	GR/DSCF	LESS THAN
NV-0036	TS POWER PLANT	COAL HANDLING OPERATIONS			MULTIPLE TRANSFER POINTS ALL CONTROLLED BY BAGHOUSE	FABRIC FILTER DUST COLLECITON	0.01	GR/DSCF	
OH-0270	CARMEUSE LIME - MAPLE GROVE FACILITY	SOLID FUEL HANDLING - COAL AND COKE				WORK PRACTICES THAT MINIMIZE OR ELIMINATE VISIBLE EMISSIONS OF FUGITIVE DUST.	0.89	LB/H	
OH-0270	CARMEUSE LIME - MAPLE GROVE FACILITY	SOLID FUEL HANDLING - COAL AND COKE				WORK PRACTICES THAT MINIMIZE OR ELIMINATE VISIBLE EMISSIONS OF FUGITIVE DUST.	0.31	T/YR	

EPA-R5-2019-006986_0000088

RBLC Matching Facilities for Search Criteria:
Permit Date Between 1/1/1997 and 12/9/2007
And Process Type "90.011" Coal Handling, Processing, Preparation, and Cleaning Activities
Pollutant: Particulate Matter

RBLCID	FACILITYNAME	PROCESSNAME	THRUPUT	THRUPUT UNIT	PROCESSNOTES	CTRLDESC	EMISLIMIT1	EMISLIMIT1 UNIT	EMISLIMIT1AVGTIMECONDITION
OH-0272	HAVERHILL NORTH COKE COMPANY	LOAD IN AND LOAD OUT OF COKE/COAL STORAGE PILES			Coal and coke load-in and load-out and storage piles. Using Method 22 for visible emissions limit.	LOAD-IN COAL, COKE, AND COKE BREEZE W/ STACKING TUBE; LOAD-IN COAL W/WATER SPRAYS/DUST SUPPRESSANT; LOAD-OUT COAL UNDER PILE GRAVITY FEED AND WATER SPRAY; LOAD-OUT COKE W/ UNDER PILE GRAVITY FEED.	4	T/YR	
OH-0272	HAVERHILL NORTH COKE COMPANY	LOAD IN AND LOAD OUT OF COKE/COAL STORAGE PILES			Coal and coke load-in and load-out and storage piles. Using Method 22 for visible emissions limit.	LOAD-IN COAL, COKE, AND COKE BREEZE W/ STACKING TUBE; LOAD-IN COAL W/WATER SPRAYS/DUST SUPPRESSANT; LOAD-OUT COAL UNDER PILE GRAVITY FEED AND WATER SPRAY; LOAD-OUT COKE W/ UNDER PILE GRAVITY FEED.	1.98	T/YR	
SC-0104	SANTEE COOPER CROSS GENERATING STATION	COAL HANDLING	26280000	T/YR		BAGHOUSE	1.4	LB/H	EACH UNIT
SD-0003	GCC DACOTAH	COAL DRYER - FK PUMP	20	T/H		FABRIC FILTER	0.01	GR/DSCF	
SD-0003	GCC DACOTAH	COAL HOPPER TO CONVEYOR	400	T/H		FABRIC FILTER	0.01	GR/DSCF	
SD-0003	GCC DACOTAH	COAL SURGE BIN TOP (2)	400	T/H	2 identical units	FABRIC FILTER	0.01	GR/DSCF	
SD-0003	GCC DACOTAH	COAL TRANSFER	400	T/H		FABRIC FILTER	0.01	GR/DSCF	HOURLY MAXIMUM
SD-0003	GCC DACOTAH	COAL TUNNEL TO COAL STACKER	400	T/H		FABRIC FILTER	0.01	GR/DSCF	
TX-0279	NORTH TEXAS CEMENT COMPANY	RAW COAL/COKE BIN			BAGHOUSE STACK	BAGHOUSE & SPRAY COAL/COKE PILES	0.08	LB/H	
TX-0279	NORTH TEXAS CEMENT COMPANY	RAW COAL/COKE BIN			BAGHOUSE STACK	BAGHOUSE & SPRAY COAL/COKE PILES	0.08	LB/H	
TX-0279	NORTH TEXAS CEMENT COMPANY	MAT STORAGE, CRUSHED COAL/COKE BIN			BAGHOUSE STACK	BAGHOUSE AND SPRAY PILE	0.01	LB/H	
TX-0279	NORTH TEXAS CEMENT COMPANY	MAT STORAGE, CRUSHED COAL/COKE BIN			BAGHOUSE STACK	BAGHOUSE AND SPRAY THE PILE	0.01	LB/H	
TX-0279	NORTH TEXAS CEMENT COMPANY	MAT HANDLING COAL/COKE CONVEYOR TO COAL GRINDING			COAL/COKE CONVEYOR BELT TO COAL GRINDING SYSTEM. FUGITIVE EMISSIONS ARE AN ESTIMATE ONLY	COVERED CONVEYOR BELT	0.01	LB/H	
TX-0279	NORTH TEXAS CEMENT COMPANY	MAT HANDLING COAL/COKE CONVEYOR TO COAL GRINDING			COAL/COKE CONVEYOR BELT TO COAL GRINDING SYSTEM. FUGITIVE EMISSIONS ARE AN ESTIMATE ONLY	COVERED CONVEYOR BELT	0.01	LB/H	
TX-0279	NORTH TEXAS CEMENT COMPANY	MAT HANDLING COAL/COKE CONVEYOR TO MILL FEED BIN			FUGITIVE EMISSIONS ARE AN ESTIMATE ONLY	COVERED CONVEYOR BELT	0.01	LB/H	
TX-0279	NORTH TEXAS CEMENT COMPANY	MAT HANDLING COAL/COKE CONVEYOR TO MILL FEED BIN			FUGITIVE EMISSIONS ARE AN ESTIMATE ONLY	COVERED CONVEYOR BELT	0.01	LB/H	
TX-0279	NORTH TEXAS CEMENT COMPANY	MAT HANDLING COAL/COKE CONVEYOR TO STACKER			FUGITIVE EMISSIONS ARE AN ESTIMATE ONLY.	COVERED CONVEYOR BELT	0.01	LB/H	
TX-0279	NORTH TEXAS CEMENT COMPANY	MAT HANDLING COAL/COKE CONVEYOR TO STACKER			FUGITIVE EMISSIONS ARE AN ESTIMATE ONLY.	COVERED CONVEYOR BELT	0.01	LB/H	
TX-0279	NORTH TEXAS CEMENT COMPANY	MAT HANDLING, COAL/COKE UNLOADING CONVEYOR BELT			FUGITIVE EMISSIONS ARE AN ESTIMATE	COVERED CONVEYOR BELT	0.01	LB/H	
TX-0279	NORTH TEXAS CEMENT COMPANY	MAT HANDLING, COAL/COKE UNLOADING CONVEYOR BELT			FUGITIVE EMISSIONS ARE AN ESTIMATE	COVERED CONVEYOR BELT, WATER SPRAY	0.01	LB/H	
TX-0279	NORTH TEXAS CEMENT COMPANY	MATERIAL HANDLING COAL/COKE DROP BELT TO BELT			FUGITIVE EMISSIONS ARE AN ESTIMATE ONLY.	COVERED CONVEYOR BELTS	0.19	LB/H	
TX-0279	NORTH TEXAS CEMENT COMPANY	MATERIAL HANDLING COAL/COKE DROP BELT TO BELT			FUGITIVE EMISSIONS ARE AN ESTIMATE ONLY.	COVERED CONVEYOR BELTS	0.09	LB/H	
TX-0279	NORTH TEXAS CEMENT COMPANY	MATERIAL HANDLING, COAL/COKE STACKER TO PILE			FUGITIVE EMISSIONS ARE AN ESTIMATE ONLY	ENCLOSURE, WATER SPRAY	0.01	LB/H	3-H AV
TX-0279	NORTH TEXAS CEMENT COMPANY	MAT HANDLING, COAL/COKE DROP PT TO HOPPER (MT08)			FUGITIVE EMISSIONS ARE AN ESTIMATE ONLY	PARTIAL ENCLOSURE AND WATER SPRAY	0.19	LB/H	

EPA-R5-2019-006986_0000088

RBLC Matching Facilities for Search Criteria:
Permit Date Between 1/1/1997 and 12/9/2007
And Process Type "90.011" Coal Handling, Processing, Preparation, and Cleaning Activities
Pollutant: Particulate Matter

RBLCID	FACILITYNAME	PROCESSNAME	THRUPUT	THRUPUT UNIT	PROCESSNOTES	CTRLDESC	EMISLIMIT1	EMISLIMIT1 UNIT	EMISLIMIT1AVGT IMECONDITION
TX-0279	NORTH TEXAS CEMENT COMPANY	MAT HANDLING, COAL/COKE DROP PT TO HOPPER (MT08)			FUGITIVE EMISSIONS ARE AN ESTIMATE ONLY	PARTIAL ENCLOSURE AND WATER SPRAY	0.09	LB/H	
TX-0279	NORTH TEXAS CEMENT COMPANY	MATERIAL HANDLING COAL/COKE DROP FEEDER TO BELT			FUGITIVE EMISSIONS ARE AN ESTIMATE	PARTIAL ENCLOSURE AND WATER SPRAY	0.19	LB/H	
TX-0279	NORTH TEXAS CEMENT COMPANY	MATERIAL HANDLING, COAL/COKE DROP POINT TO PILE			FUGITIVE EMISSIONS ARE AN ESTIMATE ONLY.	PARTIAL ENCLOSURE AND WATER SPRAY	0.47	LB/H	
TX-0279	NORTH TEXAS CEMENT COMPANY	MATERIAL HANDLING, COAL/COKE DROP POINT TO PILE			FUGITIVE EMISSIONS ARE AN ESTIMATE ONLY.	PARTIAL ENCLOSURE AND WATER SPRAY	0.22	LB/H	
TX-0279	NORTH TEXAS CEMENT COMPANY	MATERIAL HANDLING, COAL/COKE DROP POINT TO STACKER			FUGITIVE EMISSIONS ARE AN ESTIMATE ONLY.	PARTIAL ENCLOSURE AND WATER SPRAY	0.22	LB/H	
TX-0279	NORTH TEXAS CEMENT COMPANY	MATERIAL HANDLING, COAL/COKE DROP TO HOPPER (MT05)			FUGITIVE EMISSIONS ARE AN ESTIMATE ONLY	PARTIAL ENCLOSURE AND WATER SPRAY	0.47	LB/H	
TX-0279	NORTH TEXAS CEMENT COMPANY	MATERIAL HANDLING, COAL/COKE DROP TO HOPPER (MT05)			FUGITIVE EMISSIONS ARE AN ESTIMATE ONLY	PARTIAL ENCLOSURE AND WATER SPRAY	0.22	LB/H	
TX-0279	NORTH TEXAS CEMENT COMPANY	MAT HANDLING, COAL/COKE RECEIVING DROP TO HOPPER			FUGITIVE EMISSIONS ARE AN ESTIMATE	PARTIAL ENCLOSURE AND WATER SPRAY.	0.07	LB/H	
TX-0279	NORTH TEXAS CEMENT COMPANY	MAT HANDLING, COAL/COKE RECEIVING DROP TO HOPPER			FUGITIVE EMISSIONS ARE AN ESTIMATE	PARTIAL ENCLOSURE AND WATER SPRAY.	0.04	LB/H	
TX-0279	NORTH TEXAS CEMENT COMPANY	MATERIAL HANDLING, COAL/COKE DROP POINT TO STACKER			FUGITIVE EMISSIONS ARE AN ESTIMATE ONLY.	PARTIAL ENCLOSURE AND WATER SPRAY.	0.47	LB/H	
TX-0279	NORTH TEXAS CEMENT COMPANY	MATERIAL HANDLING, COAL/COKE STACKER TO PILE			FUGITIVE EMISSIONS ARE AN ESTIMATE ONLY	PARTIAL ENCLOSURES, WATER SPRAYS	0.01	LB/H	EACH
TX-0279	NORTH TEXAS CEMENT COMPANY	MATERIAL STORAGE, COAL/COKE PILES			FUGITIVE EMISSIONS ARE AN ESTIMATE ONLY.	SPRAY THE C/C PILES	0.55	LB/H	
TX-0279	NORTH TEXAS CEMENT COMPANY	MATERIAL STORAGE, COAL/COKE PILES			FUGITIVE EMISSIONS ARE AN ESTIMATE ONLY.	SPRAY THE C/C PILES	0.28	LB/H	
TX-0332	CHAPPARRAL STEEL MIDLOTHIAN STEEL MILL	RAILCAR LOADING FROM PELLETIZER SILO/BAGHOUSE DUST			EPN 13 & 15B. FUGITIVE EMISSIONS ARE AN ESTIMATE ONLY.	NONE INDICATED	0.0006	LB/H	
TX-0332	CHAPPARRAL STEEL MIDLOTHIAN STEEL MILL	RAILCAR LOADING FROM PELLETIZER SILO/BAGHOUSE DUST			EPN 13 & 15B. FUGITIVE EMISSIONS ARE AN ESTIMATE ONLY.	NONE INDICATED	0.0003	LB/H	
TX-0342	LIMESTONE ELECTRIC GENERATING STATION	(2) FUEL HANDLING ACTIVE STORAGE PILES A&B RECLAIM				BAGHOUSE	1.03	LB/H	EACH
TX-0342	LIMESTONE ELECTRIC GENERATING STATION	(2) FUEL HANDLING LIME ADDITION SILOS A & B				BAGHOUSE	0.63	LB/H	EACH
TX-0342	LIMESTONE ELECTRIC GENERATING STATION	FUEL HANDLING CRUSHER HOUSE				BAGHOUSE	2.66	LB/H	
TX-0342	LIMESTONE ELECTRIC GENERATING STATION	FUEL HANDLING LIGNITE MINE TRANSFER SILO				BAGHOUSE	2.23	LB/H	
TX-0342	LIMESTONE ELECTRIC GENERATING STATION	FUEL HANDLING OUTBOARD TOWER NO 1				BAGHOUSE	0.26	LB/H	
TX-0342	LIMESTONE ELECTRIC GENERATING STATION	FUEL HANDLING RAIL CAR UNLOADER VAULT				BAGHOUSE	0.17	LB/H	
TX-0342	LIMESTONE ELECTRIC GENERATING STATION	FUEL HANDLING SILOS GALLERY A-D (4) UNIT 1&2				BAGHOUSE	2.49	LB/H	
TX-0342	LIMESTONE ELECTRIC GENERATING STATION	FUEL HANDLING STACKING HOPPER VAULT				BAGHOUSE	0.13	LB/H	
TX-0342	LIMESTONE ELECTRIC GENERATING STATION	FUEL HANDLING TRANSFER STATION NO 1				BAGHOUSE	0.13	LB/H	EACH
TX-0342	LIMESTONE ELECTRIC GENERATING STATION	FUEL HANDLING TRANSFER STATION NO 3				BAGHOUSE	0.09	LB/H	
TX-0342	LIMESTONE ELECTRIC GENERATING STATION	FUEL HANDLING TRANSFER TOWER NO 1Y				BAGHOUSE	3.43	LB/H	
TX-0342	LIMESTONE ELECTRIC GENERATING STATION	FUEL HANDLING TRANSFER TOWER NO 2				BAGHOUSE	1.46	LB/H	
TX-0342	LIMESTONE ELECTRIC GENERATING STATION	FUEL HANDLING TRANSFER TOWER NO 3				BAGHOUSE	2.74	LB/H	

EPA-R5-2019-006986_0000088

RBLC Matching Facilities for Search Criteria:
Permit Date Between 1/1/1997 and 12/9/2007
And Process Type "90.011" Coal Handling, Processing, Preparation, and Cleaning Activities
Pollutant: Particulate Matter

RBLCID	FACILITYNAME	PROCESSNAME	THRUPUT	THRUPUT UNIT	PROCESSNOTES	CTRLDESC	EMISLIMIT1	EMISLIMIT1 UNIT	EMISLIMIT1AVGT IMECONDITION
TX-0342	LIMESTONE ELECTRIC GENERATING STATION	FUEL HANDLING TRANSFER TOWER NO. 4				BAGHOUSE	1.37	LB/H	
TX-0342	LIMESTONE ELECTRIC GENERATING STATION	FUEL HANDLING TRIPPER TOWER NO 2				BAGHOUSE	0.17	LB/H	
TX-0342	LIMESTONE ELECTRIC GENERATING STATION	FUEL HANDLING ACTIVE STORAGE PILE RECLAIM				BAGHOUSE & WATERSPRAY	0.17	LB/H	
TX-0342	LIMESTONE ELECTRIC GENERATING STATION	FUEL HANDLING ACTIVE STORAGE PILE				NONE INDICATED	2	T/YR	PM10 fugitive
TX-0342	LIMESTONE ELECTRIC GENERATING STATION	FUEL HANDLING ACTIVE STORAGE PILE				NONE INDICATED	0.98	T/YR	HOURLY MAXIMUM
TX-0342	LIMESTONE ELECTRIC GENERATING STATION	FUEL HANDLING CONVEYOR NO 3				NONE INDICATED	0.12	LB/H	
TX-0342	LIMESTONE ELECTRIC GENERATING STATION	FUEL HANDLING CONVEYOR NO 3				NONE INDICATED	0.06	LB/H	
TX-0342	LIMESTONE ELECTRIC GENERATING STATION	FUEL HANDLING CONVEYOR NO 2				PARTIAL ENCLOSURE	0.16	LB/H	
TX-0342	LIMESTONE ELECTRIC GENERATING STATION	FUEL HANDLING CONVEYOR NO 2				PARTIAL ENCLOSURE	0.07	LB/H	
TX-0342	LIMESTONE ELECTRIC GENERATING STATION	FUEL HANDLING OVERLAND CONVEYOR				PARTIAL ENCLOSURE	4.3	LB/H	
TX-0342	LIMESTONE ELECTRIC GENERATING STATION	FUEL HANDLING OVERLAND CONVEYOR				PARTIAL ENCLOSURE	2.04	LB/H	
TX-0342	LIMESTONE ELECTRIC GENERATING STATION	FUEL HANDLING RAIL CAR UNLOADER CONVEYOR 1B				PARTIAL ENCLOSURE	0.19	LB/H	
TX-0342	LIMESTONE ELECTRIC GENERATING STATION	FUEL HANDLING RAIL CAR UNLOADER CONVEYOR 1B				PARTIAL ENCLOSURE	0.09	LB/H	
TX-0342	LIMESTONE ELECTRIC GENERATING STATION	FUEL HANDLING STACKING HOPPER CONVEYOR 1A				PARTIAL ENCLOSURE	0.37	LB/H	
TX-0342	LIMESTONE ELECTRIC GENERATING STATION	FUEL HANDLING STACKING HOPPER CONVEYOR 1A				PARTIAL ENCLOSURE	0.17	LB/H	
TX-0342	LIMESTONE ELECTRIC GENERATING STATION	FUEL HANDLING RAIL CAR UNLOADER				PARTIAL ENCLOSURE & WATER SPRAY	0.63	LB/H	
TX-0342	LIMESTONE ELECTRIC GENERATING STATION	FUEL HANDLING RAIL CAR UNLOADER				PARTIAL ENCLOSURE & WATER SPRAY	0.3	LB/H	
TX-0342	LIMESTONE ELECTRIC GENERATING STATION	FUEL HANDLING EMERGENCY STORAGE PILE				TELESCOPING CHUTE & WATER SPRAY	0.42	T/YR	
TX-0342	LIMESTONE ELECTRIC GENERATING STATION	FUEL HANDLING EMERGENCY STORAGE PILE				TELESCOPING CHUTE & WATER SPRAY	0.21	T/YR	
TX-0342	LIMESTONE ELECTRIC GENERATING STATION	FUEL HANDLING STACKING HOPPER				WATER SPRAY	0.63	LB/H	
TX-0342	LIMESTONE ELECTRIC GENERATING STATION	FUEL HANDLING STACKING HOPPER				WATER SPRAY	0.3	LB/H	
TX-0342	LIMESTONE ELECTRIC GENERATING STATION	(2) FUEL HANDLING ACTIVE STORAGE PILES A&B				WATER SPRAY & UNDERGROND RECLAIM VENT TO BAGHOUSE	3.24	T/YR	
TX-0342	LIMESTONE ELECTRIC GENERATING STATION	(2) FUEL HANDLING ACTIVE STORAGE PILES A&B				WATER SPRAY & UNDERGROUND RECLAIM VENT TO BAGHOUSE	1.56	T/YR	
TX-0342	LIMESTONE ELECTRIC GENERATING STATION	FUEL HANDLING INACTIVE STORAGE PILE				WATERING	18.4	T/YR	
TX-0342	LIMESTONE ELECTRIC GENERATING STATION	FUEL HANDLING INACTIVE STORAGE PILE				WATERING	9.02	T/YR	
VA-0292	ISLAND CREEK COAL - VP #8 GARDEN PLANT	COAL HANDLING AND TRANSFER OPERATIONS	3.5	MMT/YR		WET SUPPRESSION	16.95	T/YR	
VA-0292	ISLAND CREEK COAL - VP #8 GARDEN PLANT	COAL HANDLING AND TRANSFER OPERATIONS	3.5	MMT/YR		WET SUPPRESSION	3.35	T/YR	
WI-0122	ENERGY SERVICES OF MANITOWOC	FUEL HANDLING			PETROLEUM COKE PROCESSING AND HANDLING	PULSE-JET BAGHOUSES, ENCLOSED CONVEYORS, DUST SUPPRESSION	0.004	GR/DSCF	
WI-0225	MANITOWOC PUBLIC UTILITIES	ASH STORAGE SILO (P14, S14)				BAGHOUSE	0.02	GR/DSCF	

EPA-R5-2019-006986_0000088

RBLC Matching Facilities for Search Criteria:
Permit Date Between 1/1/1997 and 12/9/2007
And Process Type "90.011" Coal Handling, Processing, Preparation, and Cleaning Activities
Pollutant: Particulate Matter

RBLCID	FACILITYNAME	PROCESSNAME	THRUPUT	THRUPUT UNIT	PROCESSNOTES	CTRLDESC	EMISLIMIT1	EMISLIMIT1 UNIT	EMISLIMIT1AVGT IMECONDITION
WI-0225	MANITOWOC PUBLIC UTILITIES	SOLID FUEL STORAGE SILO (P12 / S12)				BAGHOUSE	0.02	GR/DSCF	
WI-0225	MANITOWOC PUBLIC UTILITIES	FUEL CRUSHING (P11)			BAGHOUSE / TOTAL ENCLOSURE, NO EXHAUST / DISCHARGE	BAGHOUSE, TOTAL ENCLOSURE, BAGHOUSE EXHAUST DISCHARGED WITHIN BUILDING.			
WI-0225	MANITOWOC PUBLIC UTILITIES	SOLID FUEL RAILCAR / TRUCK UNLOADING, STORAGE (FUG. F21, F22)			COAL / PET COKE / PAPER PELLETS (NATURAL GAS STARTUP)	FUGITIVE DUST CONTROL	20	% OPACITY	
WI-0228	WPS - WESTON PLANT	P41, S41, SYSTEM 2 - NEW JUNCTION HOUSE 2, #31 (13)			CONTROL EQUIPMENT: FABRIC FILTER BAGHOUSE	FABRIC FILTER BAGHOUSE	0.01	GR/DSCF	
WI-0228	WPS - WESTON PLANT	P42, S42, SYSTEM 3 - NEW JUNCTION HOUSE 3, #32			CONTROL EQUIPMENT: FABRIC FILTER BAGHOUSE	FABRIC FILTER BAGHOUSE	0.01	GR/DSCF	
WI-0228	WPS - WESTON PLANT	P43, S43, SYSTEM 4 - UNIT 4 SILO FILL SYSTEM #7			CONTROL EQUIPMENT: FABRIC FILTER BAGHOUSE	FABRIC FILTER BAGHOUSE	0.01	GR/DSCF	
WI-0228	WPS - WESTON PLANT	P65, S65, P66, S66; PAC TRUCK UNLOADING, PAC SILO LOADING			NOTE TO RBLC REVIEWER ==> JOE S. (RBLC STAFF) FILLED IN BLANK PROC. TYPE CODE. PLEASE CHECK IT!! //// (LIMIT IS FOR EACH UNIT); FABRIC FILTER BAGHOUSE ON EACH.	FABRIC FILTER BAGHOUSE	0.02	GR/DSCF	
WI-0228	WPS - WESTON PLANT	SYSTEM 1 - NEW RECLAIM TUNNEL EXIT, #34 (P30, S30)			CONTROL EQUIPMENT: FABRIC FILTER BAGHOUSE	FABRIC FILTER BAGHOUSE	0.01	GR/DSCF	
WI-0228	WPS - WESTON PLANT	F56, WESTON UNIT 4 COAL PILE			NORMAL OPERATING SCHEDULE: 24 HRS/DAY, 365 DAYS/YR PROCESS DESCRIPTION: COAL STORAGE PILE AND PILE TRAFFIC FUGITIVE EMISSIONS WILL BE CONTROLLED BY SUPPRESSION SYSTEM OPERATION. MONITORING AND RECORDING WILL BE DONE BY PLANT PERSONNEL INSPECT SYSTEM AND LOG OPERATION.	FUGITIVE DUST CONTROL PLAN; WET SUPRESSANTS OR SURFACE STABILIZING AGENTS; COAL PILE MAINTENACE PROCEDURES; WEEKLY INSPECTION OF INACTIVE PILE	10	% OPACITY	
WI-0228	WPS - WESTON PLANT	P40, S40, CONVEYOR 11 TELESCOPIC CHUTE #29			FABRIC FILTER BAGHOUSE	TELESCOPIC CHUTE, FUGITIVE DUST PLAN	0.484	LB/H	STACK EMISSIONS
WI-0228	WPS - WESTON PLANT	P40, S40, CONVEYOR 11 TELESCOPIC CHUTE #29			FABRIC FILTER BAGHOUSE	TELESCOPIC CHUTE, FUGITIVE DUST PLAN	0.23	LB/H	FUGITIVE EMISSIONS
WI-0233	CLM - SUPERIOR	COAL (SOLID FUEL) STORAGE AND HANDLING (P55)			FUGITIVE DUST PLAN ALSO REQUIRED.	FABRIC FILTER BAGHOUSE, TOTAL ENCLOSURE OF THE PROCESS OPERATIONS.	0.04	LB/H	
WI-0234	STORA ENSO - BIRON MILL	COAL SILO				BAGHOUSE	0.1	LB/H	
WV-0024	WESTERN GREENBRIER CO-GENERATION, LLC	COAL HANDLING	300	T/H		FABRIC FILTERS	0.01	GR/DSCF	
WY-0039	TWO ELK GENERATION PARTNERS, LIMITED PARTNERSHIP	CRUSHER, CONE, SECONDARY COAL	6000	SCFM	6000 SCFM BAGHOUSE	6000 SCFM BAGHOUSE	0.01	GR/DSCF	
WY-0039	TWO ELK GENERATION PARTNERS, LIMITED PARTNERSHIP	SILO, BOILER, PLANT COAL	8500	SCFM	8500 SCFM BAGHOUSE	8500 SCFM BAGHOUSE	0.01	GR/DCSF	
WY-0039	TWO ELK GENERATION PARTNERS, LIMITED PARTNERSHIP	DUMP POCKET, COAL	3000	SCFM	3000 SCFM BAGHOUSE	BAGHOUSE	0.01	GR/DSCF	
WY-0039	TWO ELK GENERATION PARTNERS, LIMITED PARTNERSHIP	SILO, COAL	6000	SCFM	6000 SCFM BAGHOUSE	BAGHOUSE	0.01	GR/DSCF	
WY-0057	WYGEN 2	COAL HANDLING EQUIPMENT				FABRIC FILTER	0.009	GR/DSCF	DURATION OF TESTING

EPA-R5-2019-006986_0000088

ATTACHMENT 2D
MODULE 2
OEPA APPLICATION FORMS

Section II - Specific Air Contaminant Source Information

NOTE: One copy of this section should be filled out for each air contaminant source covered by this PTI application. See the line by line PTI instructions for additional information.

1. Company identification (name for air contaminant source for which you are applying): COAL & BIOMASS HOPPER BUILDING

2. List all equipment that are part of this air contaminant source: COAL & BIOMASS HOPPER BUILDING

3. Air Contaminant Source Installation or Modification Schedule (must be completed regardless of date of installation or modification):

   When did/will you begin to install or modify the air contaminant source? (month/year) SECOND QUARTER 2008

   When did/will you begin to operate the air contaminant source? (month/year) THIRD QUARTER 2011 **OR** after issuance of PTI _____

4. Emissions Information: The following table requests information needed to determine the applicable requirements and the compliance status of this air contaminant source with those requirements. Suggestions for how to estimate emissions may be found in the instructions to the Emissions Activity Category (EAC) forms required with this application. If you need further assistance, contact your Ohio EPA permit representative.

   - If total potential emissions of HAPs or any Air Toxic is greater than 1 ton/yr, fill in the table for that (those) pollutant(s). For all other pollutants, if "Emissions before controls (max), lb/hr" multiplied by 24 hours/day is greater than 10 lb/day, fill in the table for that pollutant.
   - If you have no add-on control equipment, "Emissions before controls= will be the same as "Actual emissions"
   - Annual emissions should be based on operating 8760 hr/yr unless you are requesting operating restrictions to limit emissions in line # 8 or have described inherent limitations below.
   - If you use units other than lb/hr or ton/yr, specify the units used (e.g., gr/dscf, lb/ton charged, lb/MMBtu, ton/12-months).
   - Requested Allowable (ton/yr) is often equivalent to Potential to Emit (PTE) as defined in OAC rule 3745-31-01 and OAC rule 3745-77-01.

Pollutant	Emissions before controls (max) (lb/hr)	Actual emissions (lb/hr)	Actual emissions (ton/year)	Requested Allowable (lb/hr)	Requested Allowable (ton/year)
Particulate emissions (PE) (formerly particulate matter, PM)	12	0.2	0.6	0.2	0.6
PM_{10} (PM < 10 microns in diameter)	12	0.2	0.6	0.2	0.6
Sulfur dioxide (SO_2)	0	0	0	0	0
Nitrogen oxides (NO_x)	0	0	0	0	0
Carbon monoxide (CO)	0	0	0	0	0
Organic compounds (OC)	0	0	0	0	0
Volatile organic compounds (VOC)	0	0	0	0	0
Total HAPs	0	0	0	0	0
Highest single HAP:	0	0	0	0	0
Air Toxics (see instructions):	0	0	0	0	0

Section II - Specific Air Contaminant Source Information

Provide your calculations as an attachment and explain how all process variables and emission factors were selected. Note the emissions factor(s) employed and document the origin. Example: AP-42, Table 4.4-3 (8/97); stack test, Method 5, 4/96; mass balance based on MSDS; etc.

5. **Does this air contaminant source employ emissions control equipment?**

☒ **Yes** - fill out the applicable information below.

☐ **No** - proceed to item # 6.

Note: Pollutant abbreviations used below: Particulates = PE; Organic compounds = OC; Sulfur dioxide = SO_2; Nitrogen oxides = NOx; Carbon monoxide = CO

☐ **Cyclone/Multiclone**

Manufacturer: _____ Year installed: _____
What do you call this control equipment: _____
Pollutant(s) controlled: ☐ PE ☐ OC ☐ SO_2 ☐ NOx ☐ CO ☐ Other _____
Estimated capture efficiency (%): _____ Basis for efficiency: _____
Design control efficiency (%): _____ Basis for efficiency: _____
Type: ☐ Cyclone ☐ Multiclone ☐ Rotoclone ☐ Other _____
☐ This is the only control equipment on this air contaminant source
If no, this control equipment is: ☐ Primary ☐ Secondary ☐ Parallel
List any other air contaminant sources that are also vented to this control equipment:
_____

☒ **Fabric Filter/Baghouse**

Manufacturer: TO BE DETERMINED Year installed: NEW FACILITY
What do you call this control equipment: FEEDSTOCK PROCESSING BAGHOUSE 12
Pollutant(s) controlled: ☒ PE ☐ OC ☐ SO_2 ☐ NOx ☐ CO ☐ Other _____
Estimated capture efficiency (%):100 Basis for efficiency: ENGINEERING DESIGN
Design control efficiency (%):99 Basis for efficiency: LITERATURE
Operating pressure drop range (inches of water): Minimum: ___3_____Maximum: ____6_____
Pressure type: ☒ Negative pressure ☐ Positive pressure
Fabric cleaning mechanism: ☐ Reverse air ☒ Pulse jet ☐ Shaker ☐ Other _____
☐ Lime injection or fabric coating agent used: Type: _____ Feed rate: _____
☒ This is the only control equipment on this air contaminant source
If no, this control equipment is: ☐ Primary ☐ Secondary ☐ Parallel
List any other air contaminant sources that are also vented to this control equipment:
_____

☐ **Wet Scrubber**

Manufacturer: _____ Year installed: _____
What do you call this control equipment: _____
Pollutant(s) controlled: ☐ PE ☐ OC ☐ SO_2 ☐ NOx ☐ CO ☐ Other _____
Estimated capture efficiency (%): _____ Basis for efficiency: _____
Design control efficiency (%): _____ Basis for efficiency: _____
Type: ☐ Spray chamber ☐ Packed bed ☐ Impingement ☐ Venturi ☐ Other _____
Operating pressure drop range (inches of water): Minimum: _____ Maximum: _____
pH range for scrubbing liquid: Minimum: _____ Maximum: _____
Scrubbing liquid flow rate (gal/min): _____
Is scrubber liquid recirculated? ☐ Yes ☐ No
Water supply pressure (psig): _____ NOTE: This item for spray chambers only.
☐ This is the only control equipment on this air contaminant source
If no, this control equipment is: ☐ Primary ☐ Secondary ☐ Parallel
List any other air contaminant sources that are also vented to this control equipment:
_____

☐ **Electrostatic Precipitator**

Manufacturer: _____ Year installed: _____
What do you call this control equipment: _____
Pollutant(s) controlled: ☐ PE ☐ OC ☐ SO_2 ☐ NOx ☐ CO ☐ Other _____

Section II - Specific Air Contaminant Source Information

Estimated capture efficiency (%):_____ Basis for efficiency: _____
Design control efficiency (%):_____ Basis for efficiency: _____
Type: ☐ Plate-wire ☐ Flat-plate ☐ Tubular ☐ Wet ☐ Other _____
Number of operating fields: _____

☐ This is the only control equipment on this air contaminant source
If no, this control equipment is: ☐ Primary ☐ Secondary ☐ Parallel
List any other air contaminant sources that are also vented to this control equipment:
_____

☐ **Concentrator**
Manufacturer: _____ Year installed: _____
What do you call this control equipment: _____
Pollutant(s) controlled: ☐ PE ☐ OC ☐ SO_2 ☐ NOx ☐ CO ☐ Other _____
Estimated capture efficiency (%):_____ Basis for efficiency: _____
Design regeneration cycle time (minutes): _____
Minimum desorption air stream temperature (°F): _____
Rotational rate (revolutions/hour): _____
☐ This is the only control equipment on this air contaminant source
If no, this control equipment is: ☐ Primary ☐ Secondary ☐ Parallel
List any other air contaminant sources that are also vented to this control equipment:
_____

☐ **Catalytic Incinerator**
Manufacturer: _____ Year installed: _____
What do you call this control equipment: _____
Pollutant(s) controlled: ☐ PE ☐ OC ☐ SO_2 ☐ NOx ☐ CO ☐ Other _____
Estimated capture efficiency (%):_____ Basis for efficiency: _____
Design control efficiency (%):_____ Basis for efficiency: _____
Minimum inlet gas temperature (°F): _____
Combustion chamber residence time (seconds): _____
Minimum temperature difference (°F) across catalyst during air contaminant source operation: _____
☐ This is the only control equipment on this air contaminant source
If no, this control equipment is: ☐ Primary ☐ Secondary ☐ Parallel
List any other air contaminant sources that are also vented to this control equipment:
_____

☐ **Thermal Incinerator/Thermal Oxidizer**
Manufacturer: _____ Year installed: _____
What do you call this control equipment: _____
Pollutant(s) controlled: ☐ PE ☐ OC ☐ SO_2 ☐ NOx ☐ CO ☐ Other _____
Estimated capture efficiency (%):_____ Basis for efficiency: _____
Design control efficiency (%):_____ Basis for efficiency: _____
Minimum operating temperature (°F) and location: _____ (See line by line instructions.)
Combustion chamber residence time (seconds): _____
☐ This is the only control equipment on this air contaminant source
If no, this control equipment is: ☐ Primary ☐ Secondary ☐ Parallel
List any other air contaminant sources that are also vented to this control equipment:
_____

☐ **Flare**
Manufacturer: _____ Year installed: _____
What do you call this control equipment: _____
Pollutant(s) controlled: ☐ PE ☐ OC ☐ SO_2 ☐ NOx ☐ CO ☐ Other _____
Estimated capture efficiency (%):_____ Basis for efficiency: _____
Design control efficiency (%):_____ Basis for efficiency: _____
Type: ☐ Enclosed ☐ Elevated (open)
Ignition device: ☐ Electric arc ☐ Pilot flame
Flame presence sensor: ☐ Yes ☐ No
☐ This is the only control equipment on this air contaminant source

Section II - Specific Air Contaminant Source Information

If no, this control equipment is: ☐ Primary ☐ Secondary ☐ Parallel
List any other air contaminant sources that are also vented to this control equipment:
_____

☐ **Condenser**
Manufacturer: _____ Year installed: _____
What do you call this control equipment: _____
Pollutant(s) controlled: ☐ PE ☐ OC ☐ SO_2 ☐ NOx ☐ CO ☐ Other _____
Estimated capture efficiency (%): _____ Basis for efficiency: _____
Design control efficiency (%): _____ Basis for efficiency: _____

Type: ☐ Indirect contact ☐ Direct contact
Maximum exhaust gas temperature (°F) during air contaminant source operation: _____
Coolant type: _____
Design coolant temperature (°F): Minimum _____ Maximum _____
Design coolant flow rate (gpm): _____
☐ This is the only control equipment on this air contaminant source
If no, this control equipment is: ☐ Primary ☐ Secondary ☐ Parallel
List any other air contaminant sources that are also vented to this control equipment:
_____

☐ **Carbon Absorber**
Manufacturer: _____ Year installed: _____
What do you call this control equipment: _____
Pollutant(s) controlled: ☐ PE ☐ OC ☐ SO_2 ☐ NOx ☐ CO ☐ Other _____
Estimated capture efficiency (%): _____ Basis for efficiency: _____
Design control efficiency (%): _____ Basis for efficiency: _____
Type: ☐ On-site regenerative ☐ Disposable
Maximum design outlet organic compound concentration (ppmv): _____
Carbon replacement frequency or regeneration cycle time (specify units): _____
Maximum temperature of the carbon bed, after regeneration (including any cooling cycle): _____
☐ This is the only control equipment on this air contaminant source
If no, this control equipment is: ☐ Primary ☐ Secondary ☐ Parallel
List any other air contaminant sources that are also vented to this control equipment:
_____

☐ **Dry Scrubber**
Manufacturer: _____ Year installed: _____
What do you call this control equipment: _____
Pollutant(s) controlled: ☐ PE ☐ OC ☐ SO_2 ☐ NOx ☐ CO ☐ Other _____
Estimated capture efficiency (%): _____ Basis for efficiency: _____
Design control efficiency (%): _____ Basis for efficiency: _____
Reagent(s) used: Type: _____ Injection rate(s): _____
Operating pressure drop range (inches of water): Minimum: _____ Maximum: _____
☐ This is the only control equipment on this air contaminant source
If no, this control equipment is: ☐ Primary ☐ Secondary ☐ Parallel
List any other air contaminant sources that are also vented to this control equipment:
_____

☐ **Paint booth filter**
Type: ☐ Paper ☐ Fiberglass ☐ Water curtain ☐ Other _____
Design control efficiency (%): _____ Basis for efficiency: _____

☐ **Other**, describe _____
Manufacturer: _____ Year installed: _____
What do you call this control equipment: _____
Pollutant(s) controlled: ☐ PE ☐ OC ☐ SO_2 ☐ NOx ☐ CO ☐ Other
Estimated capture efficiency (%): _____ Basis for efficiency: _____

Design control efficiency (%): _____ Basis for efficiency: _____

Section II - Specific Air Contaminant Source Information

☐ This is the only control equipment on this air contaminant source
If no, this control equipment is: ☐ Primary ☐ Secondary ☐ Parallel
List any other air contaminant sources that are also vented to this control equipment:

6. Attach a Process or Activity Flow Diagram to this application for each air contaminant source included in the application. The diagram should indicate their relationships to one another. See the line by line PTI instructions for additional information.

7. Emissions egress point(s) information: PTIs which allow total emissions in excess of the thresholds listed below will be subject to an air quality modeling analysis. This analysis is to assure that the impact from the requested project will not exceed Ohio=s Acceptable Incremental Impacts for criteria pollutants and/or Maximum Allowable Ground Level Concentrations (MAGLC) for air toxics. Permit requests that would have unacceptable impacts can not be approved as proposed. See the line by line PTI instructions for additional information.

Complete the tables below if the requested allowable annual emission rate for this PTI exceeds any of the following:

- Particulate Matter (PM10): 10 tons per year
- Sulfur Dioxide (SO2): 25 tons per year
- Nitrogen Oxides (NOx): 25 tons per year
- Carbon Monoxide (CO): 100 tons per year
- Air Toxic: 1 ton per year. An air toxic is any air pollutant for which the American Council of Governmental Industrial Hygienists (ACGIH) has established a Threshold Limit Value (TLV).

Complete Table 7-A below for each stack emissions egress point. An egress point is a point at which emissions from an air contaminant source are released into the ambient (outside) air. List each individual egress point on a separate line.

Table 7-A, Stack Egress Point Information

Company Name or ID for the Egress Point (examples: Stack A; Boiler Stack; etc.)	Type Code*	Stack Egress Point Shape and Dimensions (in)(examples: round 10 inch ID; rectangular 14 X 16 inches; etc.)	Stack Egress Point Height from the Ground (ft)	Stack Temp. at Max. Capacity (F)	Stack Flow Rate at Max. Capacity (ACFM)	Minimum Distance to the Property Line (ft)
COAL & BIOMASS HOPPER BUILDING	C	RECT. 2 FT X 3 FT	20	68	11,500	1,350

*Type codes for stack egress points:

A. vertical stack (unobstructed): There are no obstructions to upward flow in or on the stack such as a rain cap.
B. vertical stack (obstructed): There are obstructions to the upward flow, such as a rain cap, which prevents or inhibits the air flow in a vertical direction.
C. non-vertical stack: The stack directs the air flow in a direction which is not directly upward.

Complete Table 7-B below for each fugitive emissions egress point. List each individual egress point on a separate line. Refer to the description of the fugitive egress point type codes below the table for use in completing the type code column of the table. For air contaminant sources like roadways and storage piles, only the first 5 columns need to be completed. For an air contaminant source with multiple fugitive emissions egress points, include only the primary egress points.

Table 7-B, Fugitive Egress Point Information

Company ID for the Egress Point (examples; Garage Door B, Building C; Roof Monitor; etc.)	Type Code*	Egress Point Description (examples: garage door, 12 X 30 feet, west wall; outside gravel storage piles; etc.)	Fugitive Egress Point Height from the Ground (ft)	Minimum Distance to the Property Line (ft)	Exit Gas Temp. (F)

Section II - Specific Air Contaminant Source Information

*Type codes for fugitive egress point:

D. door or window
E. other opening in the building without a duct
F. no stack and no building enclosing the air contaminant source (e.g., roadways)

Complete Table 7-C below for each Stack Egress Point identified in Table 7-A above. In each case, use the dimensions of the largest nearby building, building segment or structure. List each individual egress point on a separate line. Use the same Company Name or ID for the Egress Point in Table 7-C that was used in Table 7-A. See the line by line PTI instructions for additional information.

Table 7-C, Egress Point Additional Information (Add rows as necessary)

Company ID or Name for the Egress Point	Building Height (ft)	Building Width (ft)	Building Length (ft)
COAL & BIOMASS HOPPER BUILDING	20	80	150

8. Request for Federally Enforceable Limits

As part of this permit application, do you wish to propose voluntary restrictions to limit emissions in order to avoid specific requirements listed below, (i.e., are you requesting federally enforceable limits to obtain synthetic minor status)?

☐ yes
☒ no
☐ not sure - please contact me if this affects me

If yes, why are you requesting federally enforceable limits? Check all that apply.

a. ☐ to avoid being a major source (see OAC rule 3745-77-01)
b. ☐ to avoid being a major MACT source (see OAC rule 3745-31-01)
c. ☐ to avoid being a major modification (see OAC rule 3745-31-01)
d. ☐ to avoid being a major stationary source (see OAC rule 3745-31-01)
e. ☐ to avoid an air dispersion modeling requirement (see Engineering Guide # 69)
f. ☐ to avoid another requirement. Describe: _____

If you checked a., b. or d., please attach a facility-wide potential to emit (PTE) analysis (for each pollutant) and synthetic minor strategy to this application. (See line by line instructions for definition of PTE.) If you checked c., please attach a net emission change analysis to this application.

9. If this air contaminant source utilizes any continuous emissions monitoring equipment for indicating or demonstrating compliance, complete the following table. This does not include continuous parametric monitoring systems.

Company ID for Egress Point	Type of Monitor	Applicable performance specification (40 CFR 60, Appendix B)	Pollutant(s) Monitored

Section II - Specific Air Contaminant Source Information

10. Do you wish to permit this air contaminant source as a portable source, allowing relocation within the state in accordance with OAC rule 3745-31-03 or OAC rule 3745-31-05?

    ☐ yes - Note: notification requirements in rules cited above must be followed.
    ☒ no

11. The appropriate Emissions Activity Category (EAC) form(s) must be completed and attached for each air contaminant source. At least one complete EAC form must be submitted for each air contaminant source for the application to be considered complete. Refer to the list attached to the PTI instructions.

Section II - Specific Air Contaminant Source Information

NOTE: One copy of this section should be filled out for each air contaminant source covered by this PTI application. See the line by line PTI instructions for additional information.

1. Company identification (name for air contaminant source for which you are applying): TRANSFER TOWER 1

2. List all equipment that are part of this air contaminant source: TRANSFER TOWER 1

3. Air Contaminant Source Installation or Modification Schedule (must be completed regardless of date of installation or modification):

   When did/will you begin to install or modify the air contaminant source? (month/year) SECOND QUARTER 2008

   When did/will you begin to operate the air contaminant source? (month/year) THIRD QUARTER 2011 **OR** after issuance of PTI _____.

4. Emissions Information: The following table requests information needed to determine the applicable requirements and the compliance status of this air contaminant source with those requirements. Suggestions for how to estimate emissions may be found in the instructions to the Emissions Activity Category (EAC) forms required with this application. If you need further assistance, contact your Ohio EPA permit representative.

   - If total potential emissions of HAPs or any Air Toxic is greater than 1 ton/yr, fill in the table for that (those) pollutant(s). For all other pollutants, if "Emissions before controls (max), lb/hr" multiplied by 24 hours/day is greater than 10 lb/day, fill in the table for that pollutant.
   - If you have no add-on control equipment, "Emissions before controls= will be the same as "Actual emissions"
   - Annual emissions should be based on operating 8760 hr/yr unless you are requesting operating restrictions to limit emissions in line # 8 or have described inherent limitations below.
   - If you use units other than lb/hr or ton/yr, specify the units used (e.g., gr/dscf, lb/ton charged, lb/MMBtu, ton/12-months).
   - Requested Allowable (ton/yr) is often equivalent to Potential to Emit (PTE) as defined in OAC rule 3745-31-01 and OAC rule 3745-77-01.

Pollutant	Emissions before controls (max) (lb/hr)	Actual emissions (lb/hr)	Actual emissions (ton/year)	Requested Allowable (lb/hr)	Requested Allowable (ton/year)
Particulate emissions (PE) (formerly particulate matter, PM)	700	0.9	3.9	0.9	3.9
PM_{10} (PM < 10 microns in diameter)	700	0.9	3.9	0.9	3.9
Sulfur dioxide (SO_2)	0	0	0	0	0
Nitrogen oxides (NO_x)	0	0	0	0	0
Carbon monoxide (CO)	0	0	0	0	0
Organic compounds (OC)	0	0	0	0	0
Volatile organic compounds (VOC)	0	0	0	0	0
Total HAPs	0	0	0	0	0
Highest single HAP:	0	0	0	0	0
Air Toxics (see instructions):	0	0	0	0	0

Provide your calculations as an attachment and explain how all process variables and emission factors were selected. Note the emissions factor(s) employed and document the origin. Example: AP-42, Table 4.4-3 (8/97); stack test, Method 5, 4/96; mass balance based on MSDS; etc.

Section II - Specific Air Contaminant Source Information

5. **Does this air contaminant source employ emissions control equipment?**

☒ **Yes** - fill out the applicable information below.

☐ **No** - proceed to item # 6.

Note: Pollutant abbreviations used below: Particulates = PE; Organic compounds = OC; Sulfur dioxide = SO_2; Nitrogen oxides = NOx; Carbon monoxide = CO

☐ **Cyclone/Multiclone**
Manufacturer: _____ Year installed: _____
What do you call this control equipment: _____
Pollutant(s) controlled: ☐ PE ☐ OC ☐ SO_2 ☐ NOx ☐ CO ☐ Other _____
Estimated capture efficiency (%): _____ Basis for efficiency: _____
Design control efficiency (%): _____ Basis for efficiency: _____
Type: ☐ Cyclone ☐ Multiclone ☐ Rotoclone ☐ Other _____
☐ This is the only control equipment on this air contaminant source
If no, this control equipment is: ☐ Primary ☐ Secondary ☐ Parallel
List any other air contaminant sources that are also vented to this control equipment:
_____

☒ **Fabric Filter/Baghouse**
Manufacturer: TO BE DETERMINED Year installed: NEW FACILITY
What do you call this control equipment: FEEDSTOCK PROCESSING BAGHOUSE 1
Pollutant(s) controlled: ☒ PE ☐ OC ☐ SO_2 ☐ NOx ☐ CO ☐ Other _____
Estimated capture efficiency (%):100 Basis for efficiency: ENGINEERING DESIGN
Design control efficiency (%):99.9 Basis for efficiency: LITERATURE
Operating pressure drop range (inches of water): Minimum: 3 Maximum: 6
Pressure type: ☒ Negative pressure ☐ Positive pressure
Fabric cleaning mechanism: ☐ Reverse air ☒ Pulse jet ☐ Shaker ☐ Other _____
☐ Lime injection or fabric coating agent used: Type: _____ Feed rate: _____
☒ This is the only control equipment on this air contaminant source
If no, this control equipment is: ☐ Primary ☐ Secondary ☐ Parallel
List any other air contaminant sources that are also vented to this control equipment:
_____

☐ **Wet Scrubber**
Manufacturer: _____ Year installed: _____
What do you call this control equipment: _____
Pollutant(s) controlled: ☐ PE ☐ OC ☐ SO_2 ☐ NOx ☐ CO ☐ Other _____
Estimated capture efficiency (%): _____ Basis for efficiency: _____
Design control efficiency (%): _____ Basis for efficiency: _____
Type: ☐ Spray chamber ☐ Packed bed ☐ Impingement ☐ Venturi ☐ Other _____
Operating pressure drop range (inches of water): Minimum: _____ Maximum: _____
pH range for scrubbing liquid: Minimum: _____ Maximum: _____
Scrubbing liquid flow rate (gal/min): _____
Is scrubber liquid recirculated? ☐ Yes ☐ No
Water supply pressure (psig): _____ NOTE: This item for spray chambers only.
☐ This is the only control equipment on this air contaminant source
If no, this control equipment is: ☐ Primary ☐ Secondary ☐ Parallel
List any other air contaminant sources that are also vented to this control equipment:
_____

☐ **Electrostatic Precipitator**
Manufacturer: _____ Year installed: _____
What do you call this control equipment: _____
Pollutant(s) controlled: ☐ PE ☐ OC ☐ SO_2 ☐ NOx ☐ CO ☐ Other _____
Estimated capture efficiency (%): _____ Basis for efficiency: _____
Design control efficiency (%): _____ Basis for efficiency: _____

Section II - Specific Air Contaminant Source Information

Type: ☐ Plate-wire ☐ Flat-plate ☐ Tubular ☐ Wet ☐ Other _____
Number of operating fields: _____

☐ This is the only control equipment on this air contaminant source
If no, this control equipment is: ☐ Primary ☐ Secondary ☐ Parallel
List any other air contaminant sources that are also vented to this control equipment:
_____

☐ **Concentrator**
Manufacturer: _____ Year installed: _____
What do you call this control equipment: _____
Pollutant(s) controlled: ☐ PE ☐ OC ☐ SO_2 ☐ NOx ☐ CO ☐ Other _____
Estimated capture efficiency (%): _____ Basis for efficiency: _____
Design regeneration cycle time (minutes): _____
Minimum desorption air stream temperature (°F): _____
Rotational rate (revolutions/hour): _____
☐ This is the only control equipment on this air contaminant source
If no, this control equipment is: ☐ Primary ☐ Secondary ☐ Parallel
List any other air contaminant sources that are also vented to this control equipment:
_____

☐ **Catalytic Incinerator**
Manufacturer: _____ Year installed: _____
What do you call this control equipment: _____
Pollutant(s) controlled: ☐ PE ☐ OC ☐ SO_2 ☐ NOx ☐ CO ☐ Other _____
Estimated capture efficiency (%): _____ Basis for efficiency: _____
Design control efficiency (%): _____ Basis for efficiency: _____
Minimum inlet gas temperature (°F): _____
Combustion chamber residence time (seconds): _____
Minimum temperature difference (°F) across catalyst during air contaminant source operation: _____
☐ This is the only control equipment on this air contaminant source
If no, this control equipment is: ☐ Primary ☐ Secondary ☐ Parallel
List any other air contaminant sources that are also vented to this control equipment:
_____

☐ **Thermal Incinerator/Thermal Oxidizer**
Manufacturer: _____ Year installed: _____
What do you call this control equipment: _____
Pollutant(s) controlled: ☐ PE ☐ OC ☐ SO_2 ☐ NOx ☐ CO ☐ Other _____
Estimated capture efficiency (%): _____ Basis for efficiency: _____
Design control efficiency (%): _____ Basis for efficiency: _____
Minimum operating temperature (°F) and location: _____ (See line by line instructions.)
Combustion chamber residence time (seconds): _____
☐ This is the only control equipment on this air contaminant source
If no, this control equipment is: ☐ Primary ☐ Secondary ☐ Parallel
List any other air contaminant sources that are also vented to this control equipment:
_____

☐ **Flare**
Manufacturer: _____ Year installed: _____
What do you call this control equipment: _____
Pollutant(s) controlled: ☐ PE ☐ OC ☐ SO_2 ☐ NOx ☐ CO ☐ Other _____
Estimated capture efficiency (%): _____ Basis for efficiency: _____
Design control efficiency (%): _____ Basis for efficiency: _____
Type: ☐ Enclosed ☐ Elevated (open)
Ignition device: ☐ Electric arc ☐ Pilot flame
Flame presence sensor: ☐ Yes ☐ No
☐ This is the only control equipment on this air contaminant source
If no, this control equipment is: ☐ Primary ☐ Secondary ☐ Parallel
List any other air contaminant sources that are also vented to this control equipment:

Section II - Specific Air Contaminant Source Information

☐ **Condenser**
Manufacturer: _____ Year installed: _____
What do you call this control equipment: _____
Pollutant(s) controlled: ☐ PE ☐ OC ☐ SO_2 ☐ NOx ☐ CO ☐ Other _____
Estimated capture efficiency (%):_____ Basis for efficiency: _____
Design control efficiency (%):_____ Basis for efficiency: _____

Type: ☐ Indirect contact ☐ Direct contact
Maximum exhaust gas temperature (°F) during air contaminant source operation: _____
Coolant type: _____
Design coolant temperature (°F): Minimum _____ Maximum _____
Design coolant flow rate (gpm): _____
☐ This is the only control equipment on this air contaminant source
If no, this control equipment is: ☐ Primary ☐ Secondary ☐ Parallel
List any other air contaminant sources that are also vented to this control equipment:
_____

☐ **Carbon Absorber**
Manufacturer: _____ Year installed: _____
What do you call this control equipment: _____
Pollutant(s) controlled: ☐ PE ☐ OC ☐ SO_2 ☐ NOx ☐ CO ☐ Other _____
Estimated capture efficiency (%):_____ Basis for efficiency: _____
Design control efficiency (%):_____ Basis for efficiency: _____
Type: ☐ On-site regenerative ☐ Disposable
Maximum design outlet organic compound concentration (ppmv): _____
Carbon replacement frequency or regeneration cycle time (specify units): _____
Maximum temperature of the carbon bed, after regeneration (including any cooling cycle): _____
☐ This is the only control equipment on this air contaminant source
If no, this control equipment is: ☐ Primary ☐ Secondary ☐ Parallel
List any other air contaminant sources that are also vented to this control equipment:
_____

☐ **Dry Scrubber**
Manufacturer: _____ Year installed: _____
What do you call this control equipment: _____
Pollutant(s) controlled: ☐ PE ☐ OC ☐ SO_2 ☐ NOx ☐ CO ☐ Other _____
Estimated capture efficiency (%):_____ Basis for efficiency: _____
Design control efficiency (%):_____ Basis for efficiency: _____
Reagent(s) used: Type: _____ Injection rate(s): _____
Operating pressure drop range (inches of water): Minimum: _____ Maximum: _____
☐ This is the only control equipment on this air contaminant source
If no, this control equipment is: ☐ Primary ☐ Secondary ☐ Parallel
List any other air contaminant sources that are also vented to this control equipment:
_____

☐ **Paint booth filter**
Type: ☐ Paper ☐ Fiberglass ☐ Water curtain ☐ Other _____
Design control efficiency (%):_____ Basis for efficiency: _____

☐ **Other**, describe _____
Manufacturer: _____ Year installed: _____
What do you call this control equipment: _____
Pollutant(s) controlled: ☐ PE ☐ OC ☐ SO_2 ☐ NOx ☐ CO ☐ Other
Estimated capture efficiency (%): _____ Basis for efficiency: _____

Design control efficiency (%):_____ Basis for efficiency: _____
☐ This is the only control equipment on this air contaminant source
If no, this control equipment is: ☐ Primary ☐ Secondary ☐ Parallel

Section II - Specific Air Contaminant Source Information

List any other air contaminant sources that are also vented to this control equipment:

6. Attach a Process or Activity Flow Diagram to this application for each air contaminant source included in the application. The diagram should indicate their relationships to one another. See the line by line PTI instructions for additional information.

7. Emissions egress point(s) information: PTIs which allow total emissions in excess of the thresholds listed below will be subject to an air quality modeling analysis. This analysis is to assure that the impact from the requested project will not exceed Ohio=s Acceptable Incremental Impacts for criteria pollutants and/or Maximum Allowable Ground Level Concentrations (MAGLC) for air toxics. Permit requests that would have unacceptable impacts can not be approved as proposed. See the line by line PTI instructions for additional information.

   Complete the tables below if the requested allowable annual emission rate for this PTI exceeds any of the following:

   - Particulate Matter (PM10): 10 tons per year
   - Sulfur Dioxide (SO2): 25 tons per year
   - Nitrogen Oxides (NOx): 25 tons per year
   - Carbon Monoxide (CO): 100 tons per year
   - Air Toxic: 1 ton per year. An air toxic is any air pollutant for which the American Council of Governmental Industrial Hygienists (ACGIH) has established a Threshold Limit Value (TLV).

   Complete Table 7-A below for each stack emissions egress point. An egress point is a point at which emissions from an air contaminant source are released into the ambient (outside) air. List each individual egress point on a separate line.

Table 7-A, Stack Egress Point Information

Company Name or ID for the Egress Point (examples: Stack A; Boiler Stack; etc.)	Type Code*	Stack Egress Point Shape and Dimensions (in)(examples: round 10 inch ID; rectangular 14 X 16 inches; etc.)	Stack Egress Point Height from the Ground (ft)	Stack Temp. at Max. Capacity (F)	Stack Flow Rate at Max. Capacity (ACFM)	Minimum Distance to the Property Line (ft)
TRANSFER TOWER 1	A	RECT. 2 FT X 3 FT	100	68	21,000	600

*Type codes for stack egress points:

A. vertical stack (unobstructed): There are no obstructions to upward flow in or on the stack such as a rain cap.
B. vertical stack (obstructed): There are obstructions to the upward flow, such as a rain cap, which prevents or inhibits the air flow in a vertical direction.
C. non-vertical stack: The stack directs the air flow in a direction which is not directly upward.

Complete Table 7-B below for each fugitive emissions egress point. List each individual egress point on a separate line. Refer to the description of the fugitive egress point type codes below the table for use in completing the type code column of the table. For air contaminant sources like roadways and storage piles, only the first 5 columns need to be completed. For an air contaminant source with multiple fugitive emissions egress points, include only the primary egress points.

Table 7-B, Fugitive Egress Point Information

Company ID for the Egress Point (examples; Garage Door B, Building C; Roof Monitor; etc.)	Type Code*	Egress Point Description (examples: garage door, 12 X 30 feet, west wall; outside gravel storage piles; etc.)	Fugitive Egress Point Height from the Ground (ft)	Minimum Distance to the Property Line (ft)	Exit Gas Temp. (F)

Section II - Specific Air Contaminant Source Information

*Type codes for fugitive egress point:

D. door or window
E. other opening in the building without a duct
F. no stack and no building enclosing the air contaminant source (e.g., roadways)

Complete Table 7-C below for each Stack Egress Point identified in Table 7-A above. In each case, use the dimensions of the largest nearby building, building segment or structure. List each individual egress point on a separate line. Use the same Company Name or ID for the Egress Point in Table 7-C that was used in Table 7-A. See the line by line PTI instructions for additional information.

Table 7-C, Egress Point Additional Information (Add rows as necessary)			
Company ID or Name for the Egress Point	**Building Height (ft)**	**Building Width (ft)**	**Building Length (ft)**
TRANSFER TOWER 1 (by feedstock piles)	50	120	700

8. Request for Federally Enforceable Limits

As part of this permit application, do you wish to propose voluntary restrictions to limit emissions in order to avoid specific requirements listed below, (i.e., are you requesting federally enforceable limits to obtain synthetic minor status)?

☐ yes
☒ no
☐ not sure - please contact me if this affects me

If yes, why are you requesting federally enforceable limits? Check all that apply.

a. ☐ to avoid being a major source (see OAC rule 3745-77-01)
b. ☐ to avoid being a major MACT source (see OAC rule 3745-31-01)
c. ☐ to avoid being a major modification (see OAC rule 3745-31-01)
d. ☐ to avoid being a major stationary source (see OAC rule 3745-31-01)
e. ☐ to avoid an air dispersion modeling requirement (see Engineering Guide # 69)
f. ☐ to avoid another requirement. Describe: _____

If you checked a., b. or d., please attach a facility-wide potential to emit (PTE) analysis (for each pollutant) and synthetic minor strategy to this application. (See line by line instructions for definition of PTE.) If you checked c., please attach a net emission change analysis to this application.

9. If this air contaminant source utilizes any continuous emissions monitoring equipment for indicating or demonstrating compliance, complete the following table. This does not include continuous parametric monitoring systems.

Company ID for Egress Point	Type of Monitor	Applicable performance specification (40 CFR 60, Appendix B)	Pollutant(s) Monitored

10. Do you wish to permit this air contaminant source as a portable source, allowing relocation within the state in accordance with OAC rule 3745-31-03 or OAC rule 3745-31-05?

Section II - Specific Air Contaminant Source Information

☐ yes - Note: notification requirements in rules cited above must be followed.
☒ no

11. The appropriate Emissions Activity Category (EAC) form(s) must be completed and attached for each air contaminant source. At least one complete EAC form must be submitted for each air contaminant source for the application to be considered complete. Refer to the list attached to the PTI instructions.

Section II - Specific Air Contaminant Source Information

NOTE: One copy of this section should be filled out for each air contaminant source covered by this PTI application. See the line by line PTI instructions for additional information.

1. Company identification (name for air contaminant source for which you are applying): TRANSFER TOWER 2

2. List all equipment that are part of this air contaminant source: TRANSFER TOWER 2

3. Air Contaminant Source Installation or Modification Schedule (must be completed regardless of date of installation or modification):

   When did/will you begin to install or modify the air contaminant source? (month/year) SECOND QUARTER 2008

   When did/will you begin to operate the air contaminant source? (month/year) THIRD QUARTER 2011 **OR** after issuance of PTI _____

4. Emissions Information: The following table requests information needed to determine the applicable requirements and the compliance status of this air contaminant source with those requirements. Suggestions for how to estimate emissions may be found in the instructions to the Emissions Activity Category (EAC) forms required with this application. If you need further assistance, contact your Ohio EPA permit representative.

   - If total potential emissions of HAPs or any Air Toxic is greater than 1 ton/yr, fill in the table for that (those) pollutant(s). For all other pollutants, if "Emissions before controls (max), lb/hr" multiplied by 24 hours/day is greater than 10 lb/day, fill in the table for that pollutant.
   - If you have no add-on control equipment, "Emissions before controls= will be the same as "Actual emissions".
   - Annual emissions should be based on operating 8760 hr/yr unless you are requesting operating restrictions to limit emissions in line # 8 or have described inherent limitations below.
   - If you use units other than lb/hr or ton/yr, specify the units used (e.g., gr/dscf, lb/ton charged, lb/MMBtu, ton/12-months).
   - Requested Allowable (ton/yr) is often equivalent to Potential to Emit (PTE) as defined in OAC rule 3745-31-01 and OAC rule 3745-77-01.

Pollutant	Emissions before controls (max) (lb/hr)	Actual emissions (lb/hr)	Actual emissions (ton/year)	Requested Allowable (lb/hr)	Requested Allowable (ton/year)
Particulate emissions (PE) (formerly particulate matter, PM)	700	0.9	3.9	0.9	3.9
PM_{10} (PM < 10 microns in diameter)	700	0.9	3.9	0.9	3.9
Sulfur dioxide (SO_2)	0	0	0	0	0
Nitrogen oxides (NO_x)	0	0	0	0	0
Carbon monoxide (CO)	0	0	0	0	0
Organic compounds (OC)	0	0	0	0	0
Volatile organic compounds (VOC)	0	0	0	0	0
Total HAPs	0	0	0	0	0
Highest single HAP:	0	0	0	0	0
Air Toxics (see instructions):	0	0	0	0	0

Provide your calculations as an attachment and explain how all process variables and emission factors were selected. Note the emissions factor(s) employed and document the origin. Example: AP-42, Table 4.4-3 (8/97); stack test, Method 5, 4/96; mass balance based on MSDS; etc.

Section II - Specific Air Contaminant Source Information

5. **Does this air contaminant source employ emissions control equipment?**

☒ **Yes** - fill out the applicable information below.

☐ **No** - proceed to item # 6.

Note: Pollutant abbreviations used below: Particulates = PE; Organic compounds = OC; Sulfur dioxide = SO_2; Nitrogen oxides = NOx; Carbon monoxide = CO

☐ **Cyclone/Multiclone**
Manufacturer: _____ Year installed: _____
What do you call this control equipment: _____
Pollutant(s) controlled: ☐ PE ☐ OC ☐ SO_2 ☐ NOx ☐ CO ☐ Other _____
Estimated capture efficiency (%): _____ Basis for efficiency: _____
Design control efficiency (%): _____ Basis for efficiency: _____
Type: ☐ Cyclone ☐ Multiclone ☐ Rotoclone ☐ Other _____
☐ This is the only control equipment on this air contaminant source
If no, this control equipment is: ☐ Primary ☐ Secondary ☐ Parallel
List any other air contaminant sources that are also vented to this control equipment:
_____

☒ **Fabric Filter/Baghouse**
Manufacturer: TO BE DETERMINED Year installed: NEW FACILITY
What do you call this control equipment: FEEDSTOCK PROCESSING BAGHOUSE 2
Pollutant(s) controlled: ☒ PE ☐ OC ☐ SO_2 ☐ NOx ☐ CO ☐ Other _____
Estimated capture efficiency (%): 100 Basis for efficiency: ENGINEERING DESIGN
Design control efficiency (%): 99.9 Basis for efficiency: LITERATURE
Operating pressure drop range (inches of water): Minimum: 3 Maximum: 6
Pressure type: ☒ Negative pressure ☐ Positive pressure
Fabric cleaning mechanism: ☐ Reverse air ☒ Pulse jet ☐ Shaker ☐ Other _____
☐ Lime injection or fabric coating agent used: Type: _____ Feed rate: _____
☒ This is the only control equipment on this air contaminant source
If no, this control equipment is: ☐ Primary ☐ Secondary ☐ Parallel
List any other air contaminant sources that are also vented to this control equipment:
_____

☐ **Wet Scrubber**
Manufacturer: _____ Year installed: _____
What do you call this control equipment: _____
Pollutant(s) controlled: ☐ PE ☐ OC ☐ SO_2 ☐ NOx ☐ CO ☐ Other _____
Estimated capture efficiency (%): _____ Basis for efficiency: _____
Design control efficiency (%): _____ Basis for efficiency: _____
Type: ☐ Spray chamber ☐ Packed bed ☐ Impingement ☐ Venturi ☐ Other _____
Operating pressure drop range (inches of water): Minimum: _____ Maximum: _____
pH range for scrubbing liquid: Minimum: _____ Maximum: _____
Scrubbing liquid flow rate (gal/min): _____
Is scrubber liquid recirculated? ☐ Yes ☐ No
Water supply pressure (psig): _____ NOTE: This item for spray chambers only.
☐ This is the only control equipment on this air contaminant source
If no, this control equipment is: ☐ Primary ☐ Secondary ☐ Parallel
List any other air contaminant sources that are also vented to this control equipment:
_____

☐ **Electrostatic Precipitator**
Manufacturer: _____ Year installed: _____
What do you call this control equipment: _____
Pollutant(s) controlled: ☐ PE ☐ OC ☐ SO_2 ☐ NOx ☐ CO ☐ Other _____
Estimated capture efficiency (%): _____ Basis for efficiency: _____
Design control efficiency (%): _____ Basis for efficiency: _____

Section II - Specific Air Contaminant Source Information

Type: ☐ Plate-wire ☐ Flat-plate ☐ Tubular ☐ Wet ☐ Other _____
Number of operating fields: _____

☐ This is the only control equipment on this air contaminant source
If no, this control equipment is: ☐ Primary ☐ Secondary ☐ Parallel
List any other air contaminant sources that are also vented to this control equipment:
_____

☐ **Concentrator**
Manufacturer: _____ Year installed: _____
What do you call this control equipment: _____
Pollutant(s) controlled: ☐ PE ☐ OC ☐ SO_2 ☐ NOx ☐ CO ☐ Other _____
Estimated capture efficiency (%):_____ Basis for efficiency: _____
Design regeneration cycle time (minutes): _____
Minimum desorption air stream temperature (°F): _____
Rotational rate (revolutions/hour): _____
☐ This is the only control equipment on this air contaminant source
If no, this control equipment is: ☐ Primary ☐ Secondary ☐ Parallel
List any other air contaminant sources that are also vented to this control equipment:
_____

☐ **Catalytic Incinerator**
Manufacturer: _____ Year installed: _____
What do you call this control equipment: _____
Pollutant(s) controlled: ☐ PE ☐ OC ☐ SO_2 ☐ NOx ☐ CO ☐ Other _____
Estimated capture efficiency (%):_____ Basis for efficiency: _____
Design control efficiency (%):_____ Basis for efficiency: _____
Minimum inlet gas temperature (°F): _____
Combustion chamber residence time (seconds): _____
Minimum temperature difference (°F) across catalyst during air contaminant source operation: _____
☐ This is the only control equipment on this air contaminant source
If no, this control equipment is: ☐ Primary ☐ Secondary ☐ Parallel
List any other air contaminant sources that are also vented to this control equipment:
_____

☐ **Thermal Incinerator/Thermal Oxidizer**
Manufacturer: _____ Year installed: _____
What do you call this control equipment: _____
Pollutant(s) controlled: ☐ PE ☐ OC ☐ SO_2 ☐ NOx ☐ CO ☐ Other _____
Estimated capture efficiency (%):_____ Basis for efficiency: _____
Design control efficiency (%):_____ Basis for efficiency: _____
Minimum operating temperature (°F) and location: _____(See line by line instructions.)
Combustion chamber residence time (seconds): _____
☐ This is the only control equipment on this air contaminant source
If no, this control equipment is: ☐ Primary ☐ Secondary ☐ Parallel
List any other air contaminant sources that are also vented to this control equipment:
_____

☐ **Flare**
Manufacturer: _____ Year installed: _____
What do you call this control equipment: _____
Pollutant(s) controlled: ☐ PE ☐ OC ☐ SO_2 ☐ NOx ☐ CO ☐ Other _____
Estimated capture efficiency (%):_____ Basis for efficiency: _____
Design control efficiency (%):_____ Basis for efficiency: _____
Type: ☐ Enclosed ☐ Elevated (open)
Ignition device: ☐ Electric arc ☐ Pilot flame
Flame presence sensor: ☐ Yes ☐ No
☐ This is the only control equipment on this air contaminant source
If no, this control equipment is: ☐ Primary ☐ Secondary ☐ Parallel
List any other air contaminant sources that are also vented to this control equipment:

Section II - Specific Air Contaminant Source Information

☐ **Condenser**

Manufacturer: _____ Year installed: _____
What do you call this control equipment: _____
Pollutant(s) controlled: ☐ PE ☐ OC ☐ SO_2 ☐ NOx ☐ CO ☐ Other _____
Estimated capture efficiency (%): _____ Basis for efficiency: _____
Design control efficiency (%): _____ Basis for efficiency: _____

Type: ☐ Indirect contact ☐ Direct contact
Maximum exhaust gas temperature (°F) during air contaminant source operation: _____
Coolant type: _____
Design coolant temperature (°F): Minimum _____ Maximum _____
Design coolant flow rate (gpm): _____
☐ This is the only control equipment on this air contaminant source
If no, this control equipment is: ☐ Primary ☐ Secondary ☐ Parallel
List any other air contaminant sources that are also vented to this control equipment:
_____

☐ **Carbon Absorber**

Manufacturer: _____ Year installed: _____
What do you call this control equipment: _____
Pollutant(s) controlled: ☐ PE ☐ OC ☐ SO_2 ☐ NOx ☐ CO ☐ Other _____
Estimated capture efficiency (%): _____ Basis for efficiency: _____
Design control efficiency (%): _____ Basis for efficiency: _____
Type: ☐ On-site regenerative ☐ Disposable
Maximum design outlet organic compound concentration (ppmv): _____
Carbon replacement frequency or regeneration cycle time (specify units): _____
Maximum temperature of the carbon bed, after regeneration (including any cooling cycle): _____
☐ This is the only control equipment on this air contaminant source
If no, this control equipment is: ☐ Primary ☐ Secondary ☐ Parallel
List any other air contaminant sources that are also vented to this control equipment:
_____

☐ **Dry Scrubber**

Manufacturer: _____ Year installed: _____
What do you call this control equipment: _____
Pollutant(s) controlled: ☐ PE ☐ OC ☐ SO_2 ☐ NOx ☐ CO ☐ Other _____
Estimated capture efficiency (%): _____ Basis for efficiency: _____
Design control efficiency (%): _____ Basis for efficiency: _____
Reagent(s) used: Type: _____ Injection rate(s): _____
Operating pressure drop range (inches of water): Minimum: _____ Maximum: _____
☐ This is the only control equipment on this air contaminant source
If no, this control equipment is: ☐ Primary ☐ Secondary ☐ Parallel
List any other air contaminant sources that are also vented to this control equipment:
_____

☐ **Paint booth filter**

Type: ☐ Paper ☐ Fiberglass ☐ Water curtain ☐ Other _____
Design control efficiency (%): _____ Basis for efficiency: _____

☐ **Other**, describe _____

Manufacturer: _____ Year installed: _____
What do you call this control equipment: _____
Pollutant(s) controlled: ☐ PE ☐ OC ☐ SO_2 ☐ NOx ☐ CO ☐ Other
Estimated capture efficiency (%): _____ Basis for efficiency: _____

Design control efficiency (%): _____ Basis for efficiency: _____
☐ This is the only control equipment on this air contaminant source
If no, this control equipment is: ☐ Primary ☐ Secondary ☐ Parallel

Section II - Specific Air Contaminant Source Information

List any other air contaminant sources that are also vented to this control equipment:

6. Attach a Process or Activity Flow Diagram to this application for each air contaminant source included in the application. The diagram should indicate their relationships to one another. See the line by line PTI instructions for additional information.

7. Emissions egress point(s) information: PTIs which allow total emissions in excess of the thresholds listed below will be subject to an air quality modeling analysis. This analysis is to assure that the impact from the requested project will not exceed Ohio=s Acceptable Incremental Impacts for criteria pollutants and/or Maximum Allowable Ground Level Concentrations (MAGLC) for air toxics. Permit requests that would have unacceptable impacts can not be approved as proposed. See the line by line PTI instructions for additional information.

   Complete the tables below if the requested allowable annual emission rate for this PTI exceeds any of the following:

   - Particulate Matter (PM10): 10 tons per year
   - Sulfur Dioxide (SO2): 25 tons per year
   - Nitrogen Oxides (NOx): 25 tons per year
   - Carbon Monoxide (CO): 100 tons per year
   - Air Toxic: 1 ton per year. An air toxic is any air pollutant for which the American Council of Governmental Industrial Hygienists (ACGIH) has established a Threshold Limit Value (TLV).

   Complete Table 7-A below for each stack emissions egress point. An egress point is a point at which emissions from an air contaminant source are released into the ambient (outside) air. List each individual egress point on a separate line.

Table 7-A, Stack Egress Point Information

Company Name or ID for the Egress Point (examples: Stack A; Boiler Stack; etc.)	Type Code*	Stack Egress Point Shape and Dimensions (in)(examples: round 10 inch ID; rectangular 14 X 16 inches; etc.)	Stack Egress Point Height from the Ground (ft)	Stack Temp. at Max. Capacity (F)	Stack Flow Rate at Max. Capacity (ACFM)	Minimum Distance to the Property Line (ft)
TRANSFER TOWER 2	A	RECT. 2 FT X 3 FT	100	68	21,000	600

*Type codes for stack egress points:

A. vertical stack (unobstructed): There are no obstructions to upward flow in or on the stack such as a rain cap.
B. vertical stack (obstructed): There are obstructions to the upward flow, such as a rain cap, which prevents or inhibits the air flow in a vertical direction.
C. non-vertical stack: The stack directs the air flow in a direction which is not directly upward.

Complete Table 7-B below for each fugitive emissions egress point. List each individual egress point on a separate line. Refer to the description of the fugitive egress point type codes below the table for use in completing the type code column of the table. For air contaminant sources like roadways and storage piles, only the first 5 columns need to be completed. For an air contaminant source with multiple fugitive emissions egress points, include only the primary egress points.

Table 7-B, Fugitive Egress Point Information

Company ID for the Egress Point (examples; Garage Door B, Building C; Roof Monitor; etc.)	Type Code*	Egress Point Description (examples: garage door, 12 X 30 feet, west wall; outside gravel storage piles; etc.)	Fugitive Egress Point Height from the Ground (ft)	Minimum Distance to the Property Line (ft)	Exit Gas Temp. (F)

Section II - Specific Air Contaminant Source Information

*Type codes for fugitive egress point:

D. door or window
E. other opening in the building without a duct
F. no stack and no building enclosing the air contaminant source (e.g., roadways)

Complete Table 7-C below for each Stack Egress Point identified in Table 7-A above. In each case, use the dimensions of the largest nearby building, building segment or structure. List each individual egress point on a separate line. Use the same Company Name or ID for the Egress Point in Table 7-C that was used in Table 7-A. See the line by line PTI instructions for additional information.

Table 7-C, Egress Point Additional Information (Add rows as necessary)

Company ID or Name for the Egress Point	Building Height (ft)	Building Width (ft)	Building Length (ft)
TRANSFER TOWER 2 (by feedstock piles)	50	120	700

8. Request for Federally Enforceable Limits

As part of this permit application, do you wish to propose voluntary restrictions to limit emissions in order to avoid specific requirements listed below, (i.e., are you requesting federally enforceable limits to obtain synthetic minor status)?

☐ yes
☒ no
☐ not sure - please contact me if this affects me

If yes, why are you requesting federally enforceable limits? Check all that apply.

a. ☐ to avoid being a major source (see OAC rule 3745-77-01)
b. ☐ to avoid being a major MACT source (see OAC rule 3745-31-01)
c. ☐ to avoid being a major modification (see OAC rule 3745-31-01)
d. ☐ to avoid being a major stationary source (see OAC rule 3745-31-01)
e. ☐ to avoid an air dispersion modeling requirement (see Engineering Guide # 69)
f. ☐ to avoid another requirement. Describe: _____

If you checked a., b. or d., please attach a facility-wide potential to emit (PTE) analysis (for each pollutant) and synthetic minor strategy to this application. (See line by line instructions for definition of PTE.) If you checked c., please attach a net emission change analysis to this application.

9. If this air contaminant source utilizes any continuous emissions monitoring equipment for indicating or demonstrating compliance, complete the following table. This does not include continuous parametric monitoring systems.

Company ID for Egress Point	Type of Monitor	Applicable performance specification (40 CFR 60, Appendix B)	Pollutant(s) Monitored

10. Do you wish to permit this air contaminant source as a portable source, allowing relocation within the state in accordance with OAC rule 3745-31-03 or OAC rule 3745-31-05?

Section II - Specific Air Contaminant Source Information

☐ yes - Note: notification requirements in rules cited above must be followed.
☒ no

11. The appropriate Emissions Activity Category (EAC) form(s) must be completed and attached for each air contaminant source. At least one complete EAC form must be submitted for each air contaminant source for the application to be considered complete. Refer to the list attached to the PTI instructions.

Section II - Specific Air Contaminant Source Information

NOTE: One copy of this section should be filled out for each air contaminant source covered by this PTI application. See the line by line PTI instructions for additional information.

1. Company identification (name for air contaminant source for which you are applying): TRANSFER TOWER 3

2. List all equipment that are part of this air contaminant source: TRANSFER TOWER 3

3. Air Contaminant Source Installation or Modification Schedule (must be completed regardless of date of installation or modification):

   When did/will you begin to install or modify the air contaminant source? (month/year) SECOND QUARTER 2008

   When did/will you begin to operate the air contaminant source? (month/year) THIRD QUARTER 2011 **OR** after issuance of PTI _____

4. Emissions Information: The following table requests information needed to determine the applicable requirements and the compliance status of this air contaminant source with those requirements. Suggestions for how to estimate emissions may be found in the instructions to the Emissions Activity Category (EAC) forms required with this application. If you need further assistance, contact your Ohio EPA permit representative.

   - If total potential emissions of HAPs or any Air Toxic is greater than 1 ton/yr, fill in the table for that (those) pollutant(s). For all other pollutants, if "Emissions before controls (max), lb/hr" multiplied by 24 hours/day is greater than 10 lb/day, fill in the table for that pollutant.
   - If you have no add-on control equipment, "Emissions before controls= will be the same as "Actual emissions"
   - Annual emissions should be based on operating 8760 hr/yr unless you are requesting operating restrictions to limit emissions in line # 8 or have described inherent limitations below.
   - If you use units other than lb/hr or ton/yr, specify the units used (e.g., gr/dscf, lb/ton charged, lb/MMBtu, ton/12-months).
   - Requested Allowable (ton/yr) is often equivalent to Potential to Emit (PTE) as defined in OAC rule 3745-31-01 and OAC rule 3745-77-01.

Pollutant	Emissions before controls (max) (lb/hr)	Actual emissions (lb/hr)	Actual emissions (ton/year)	Requested Allowable (lb/hr)	Requested Allowable (ton/year)
Particulate emissions (PE) (formerly particulate matter, PM)	700	0.9	3.9	0.9	3.9
PM_{10} (PM < 10 microns in diameter)	700	0.9	3.9	0.9	3.9
Sulfur dioxide (SO_2)	0	0	0	0	0
Nitrogen oxides (NO_x)	0	0	0	0	0
Carbon monoxide (CO)	0	0	0	0	0
Organic compounds (OC)	0	0	0	0	0
Volatile organic compounds (VOC)	0	0	0	0	0
Total HAPs	0	0	0	0	0
Highest single HAP:	0	0	0	0	0
Air Toxics (see instructions):	0	0	0	0	0

Provide your calculations as an attachment and explain how all process variables and emission factors were selected. Note the emissions factor(s) employed and document the origin. Example: AP-42, Table 4.4-3 (8/97); stack test, Method 5, 4/96; mass balance based on MSDS; etc.

Section II - Specific Air Contaminant Source Information

5. **Does this air contaminant source employ emissions control equipment?**

☒ **Yes** - fill out the applicable information below.

☐ **No** - proceed to item # 6.

Note: Pollutant abbreviations used below: Particulates = PE; Organic compounds = OC; Sulfur dioxide = SO_2; Nitrogen oxides = NOx; Carbon monoxide = CO

☐ **Cyclone/Multiclone**
Manufacturer: _____ Year installed: _____
What do you call this control equipment: _____
Pollutant(s) controlled: ☐ PE ☐ OC ☐ SO_2 ☐ NOx ☐ CO ☐ Other _____
Estimated capture efficiency (%): _____ Basis for efficiency: _____
Design control efficiency (%): _____ Basis for efficiency: _____
Type: ☐ Cyclone ☐ Multiclone ☐ Rotoclone ☐ Other _____
☐ This is the only control equipment on this air contaminant source
If no, this control equipment is: ☐ Primary ☐ Secondary ☐ Parallel
List any other air contaminant sources that are also vented to this control equipment:
_____

☒ **Fabric Filter/Baghouse**
Manufacturer: TO BE DETERMINED Year installed: NEW FACILITY
What do you call this control equipment: FEEDSTOCK PROCESSING BAGHOUSE 3
Pollutant(s) controlled: ☒ PE ☐ OC ☐ SO_2 ☐ NOx ☐ CO ☐ Other _____
Estimated capture efficiency (%):100 Basis for efficiency: ENGINEERING DESIGN
Design control efficiency (%):99.9 Basis for efficiency: LITERATURE
Operating pressure drop range (inches of water): Minimum: 3 Maximum: 6
Pressure type: ☒ Negative pressure ☐ Positive pressure
Fabric cleaning mechanism: ☐ Reverse air ☒ Pulse jet ☐ Shaker ☐ Other _____
☐ Lime injection or fabric coating agent used: Type: _____ Feed rate: _____
☒ This is the only control equipment on this air contaminant source
If no, this control equipment is: ☐ Primary ☐ Secondary ☐ Parallel
List any other air contaminant sources that are also vented to this control equipment:
_____

☐ **Wet Scrubber**
Manufacturer: _____ Year installed: _____
What do you call this control equipment: _____
Pollutant(s) controlled: ☐ PE ☐ OC ☐ SO_2 ☐ NOx ☐ CO ☐ Other _____
Estimated capture efficiency (%): _____ Basis for efficiency: _____
Design control efficiency (%): _____ Basis for efficiency: _____
Type: ☐ Spray chamber ☐ Packed bed ☐ Impingement ☐ Venturi ☐ Other _____
Operating pressure drop range (inches of water): Minimum: _____ Maximum: _____
pH range for scrubbing liquid: Minimum: _____ Maximum: _____
Scrubbing liquid flow rate (gal/min): _____
Is scrubber liquid recirculated? ☐ Yes ☐ No
Water supply pressure (psig): _____ NOTE: This item for spray chambers only.
☐ This is the only control equipment on this air contaminant source
If no, this control equipment is: ☐ Primary ☐ Secondary ☐ Parallel
List any other air contaminant sources that are also vented to this control equipment:
_____

☐ **Electrostatic Precipitator**
Manufacturer: _____ Year installed: _____
What do you call this control equipment: _____
Pollutant(s) controlled: ☐ PE ☐ OC ☐ SO_2 ☐ NOx ☐ CO ☐ Other _____
Estimated capture efficiency (%): _____ Basis for efficiency: _____
Design control efficiency (%): _____ Basis for efficiency: _____

Section II - Specific Air Contaminant Source Information

Type: ☐ Plate-wire ☐ Flat-plate ☐ Tubular ☐ Wet ☐ Other _____
Number of operating fields: _____

☐ This is the only control equipment on this air contaminant source
If no, this control equipment is: ☐ Primary ☐ Secondary ☐ Parallel
List any other air contaminant sources that are also vented to this control equipment:
_____

☐ **Concentrator**
Manufacturer: _____ Year installed: _____
What do you call this control equipment: _____
Pollutant(s) controlled: ☐ PE ☐ OC ☐ SO_2 ☐ NOx ☐ CO ☐ Other _____
Estimated capture efficiency (%):_____ Basis for efficiency: _____
Design regeneration cycle time (minutes): _____
Minimum desorption air stream temperature (°F): _____
Rotational rate (revolutions/hour): _____
☐ This is the only control equipment on this air contaminant source
If no, this control equipment is: ☐ Primary ☐ Secondary ☐ Parallel
List any other air contaminant sources that are also vented to this control equipment:
_____

☐ **Catalytic Incinerator**
Manufacturer: _____ Year installed: _____
What do you call this control equipment: _____
Pollutant(s) controlled: ☐ PE ☐ OC ☐ SO_2 ☐ NOx ☐ CO ☐ Other _____
Estimated capture efficiency (%):_____ Basis for efficiency: _____
Design control efficiency (%):_____ Basis for efficiency: _____
Minimum inlet gas temperature (°F): _____
Combustion chamber residence time (seconds): _____
Minimum temperature difference (°F) across catalyst during air contaminant source operation: _____
☐ This is the only control equipment on this air contaminant source
If no, this control equipment is: ☐ Primary ☐ Secondary ☐ Parallel
List any other air contaminant sources that are also vented to this control equipment:
_____

☐ **Thermal Incinerator/Thermal Oxidizer**
Manufacturer: _____ Year installed: _____
What do you call this control equipment: _____
Pollutant(s) controlled: ☐ PE ☐ OC ☐ SO_2 ☐ NOx ☐ CO ☐ Other _____
Estimated capture efficiency (%):_____ Basis for efficiency: _____
Design control efficiency (%):_____ Basis for efficiency: _____
Minimum operating temperature (°F) and location: _____ (See line by line instructions.)
Combustion chamber residence time (seconds): _____
☐ This is the only control equipment on this air contaminant source
If no, this control equipment is: ☐ Primary ☐ Secondary ☐ Parallel
List any other air contaminant sources that are also vented to this control equipment:
_____

☐ **Flare**
Manufacturer: _____ Year installed: _____
What do you call this control equipment: _____
Pollutant(s) controlled: ☐ PE ☐ OC ☐ SO_2 ☐ NOx ☐ CO ☐ Other _____
Estimated capture efficiency (%):_____ Basis for efficiency: _____
Design control efficiency (%):_____ Basis for efficiency: _____
Type: ☐ Enclosed ☐ Elevated (open)
Ignition device: ☐ Electric arc ☐ Pilot flame
Flame presence sensor: ☐ Yes ☐ No
☐ This is the only control equipment on this air contaminant source
If no, this control equipment is: ☐ Primary ☐ Secondary ☐ Parallel
List any other air contaminant sources that are also vented to this control equipment:

Section II - Specific Air Contaminant Source Information

☐ **Condenser**
Manufacturer: _____ Year installed: _____
What do you call this control equipment: _____
Pollutant(s) controlled: ☐ PE ☐ OC ☐ SO_2 ☐ NOx ☐ CO ☐ Other _____
Estimated capture efficiency (%):_____ Basis for efficiency: _____
Design control efficiency (%):_____ Basis for efficiency: _____

Type: ☐ Indirect contact ☐ Direct contact
Maximum exhaust gas temperature (°F) during air contaminant source operation: _____
Coolant type: _____
Design coolant temperature (°F): Minimum _____ Maximum _____
Design coolant flow rate (gpm): _____
☐ This is the only control equipment on this air contaminant source
If no, this control equipment is: ☐ Primary ☐ Secondary ☐ Parallel
List any other air contaminant sources that are also vented to this control equipment:
_____

☐ **Carbon Absorber**
Manufacturer: _____ Year installed: _____
What do you call this control equipment: _____
Pollutant(s) controlled: ☐ PE ☐ OC ☐ SO_2 ☐ NOx ☐ CO ☐ Other _____
Estimated capture efficiency (%):_____ Basis for efficiency: _____
Design control efficiency (%):_____ Basis for efficiency: _____
Type: ☐ On-site regenerative ☐ Disposable
Maximum design outlet organic compound concentration (ppmv): _____
Carbon replacement frequency or regeneration cycle time (specify units): _____
Maximum temperature of the carbon bed, after regeneration (including any cooling cycle): _____
☐ This is the only control equipment on this air contaminant source
If no, this control equipment is: ☐ Primary ☐ Secondary ☐ Parallel
List any other air contaminant sources that are also vented to this control equipment:
_____

☐ **Dry Scrubber**
Manufacturer: _____ Year installed: _____
What do you call this control equipment: _____
Pollutant(s) controlled: ☐ PE ☐ OC ☐ SO_2 ☐ NOx ☐ CO ☐ Other _____
Estimated capture efficiency (%):_____ Basis for efficiency: _____
Design control efficiency (%):_____ Basis for efficiency: _____
Reagent(s) used: Type: _____ Injection rate(s): _____
Operating pressure drop range (inches of water): Minimum: _____ Maximum: _____
☐ This is the only control equipment on this air contaminant source
If no, this control equipment is: ☐ Primary ☐ Secondary ☐ Parallel
List any other air contaminant sources that are also vented to this control equipment:
_____

☐ **Paint booth filter**
Type: ☐ Paper ☐ Fiberglass ☐ Water curtain ☐ Other _____
Design control efficiency (%):_____ Basis for efficiency: _____

☐ **Other**, describe _____
Manufacturer: _____ Year installed: _____
What do you call this control equipment: _____
Pollutant(s) controlled: ☐ PE ☐ OC ☐ SO_2 ☐ NOx ☐ CO ☐ Other
Estimated capture efficiency (%): _____ Basis for efficiency: _____

Design control efficiency (%):_____ Basis for efficiency: _____
☐ This is the only control equipment on this air contaminant source
If no, this control equipment is: ☐ Primary ☐ Secondary ☐ Parallel

Section II - Specific Air Contaminant Source Information

List any other air contaminant sources that are also vented to this control equipment:

_____

6. Attach a Process or Activity Flow Diagram to this application for each air contaminant source included in the application. The diagram should indicate their relationships to one another. See the line by line PTI instructions for additional information.

7. Emissions egress point(s) information: PTIs which allow total emissions in excess of the thresholds listed below will be subject to an air quality modeling analysis. This analysis is to assure that the impact from the requested project will not exceed Ohio=s Acceptable Incremental Impacts for criteria pollutants and/or Maximum Allowable Ground Level Concentrations (MAGLC) for air toxics. Permit requests that would have unacceptable impacts can not be approved as proposed. See the line by line PTI instructions for additional information.

   Complete the tables below if the requested allowable annual emission rate for this PTI exceeds any of the following:

   - Particulate Matter (PM10): 10 tons per year
   - Sulfur Dioxide (SO2): 25 tons per year
   - Nitrogen Oxides (NOx): 25 tons per year
   - Carbon Monoxide (CO): 100 tons per year
   - Air Toxic: 1 ton per year. An air toxic is any air pollutant for which the American Council of Governmental Industrial Hygienists (ACGIH) has established a Threshold Limit Value (TLV).

   Complete Table 7-A below for each stack emissions egress point. An egress point is a point at which emissions from an air contaminant source are released into the ambient (outside) air. List each individual egress point on a separate line.

Table 7-A, Stack Egress Point Information

Company Name or ID for the Egress Point (examples: Stack A; Boiler Stack; etc.)	Type Code*	Stack Egress Point Shape and Dimensions (in)(examples: round 10 inch ID; rectangular 14 X 16 inches; etc.)	Stack Egress Point Height from the Ground (ft)	Stack Temp. at Max. Capacity (F)	Stack Flow Rate at Max. Capacity (ACFM)	Minimum Distance to the Property Line (ft)
TRANSFER TOWER 3	A	RECT. 2 FT X 3 FT	100	68	21,000	1,050

*Type codes for stack egress points:

A. vertical stack (unobstructed): There are no obstructions to upward flow in or on the stack such as a rain cap.
B. vertical stack (obstructed): There are obstructions to the upward flow, such as a rain cap, which prevents or inhibits the air flow in a vertical direction.
C. non-vertical stack: The stack directs the air flow in a direction which is not directly upward.

Complete Table 7-B below for each fugitive emissions egress point. List each individual egress point on a separate line. Refer to the description of the fugitive egress point type codes below the table for use in completing the type code column of the table. For air contaminant sources like roadways and storage piles, only the first 5 columns need to be completed. For an air contaminant source with multiple fugitive emissions egress points, include only the primary egress points.

Table 7-B, Fugitive Egress Point Information

Company ID for the Egress Point (examples; Garage Door B, Building C; Roof Monitor; etc.)	Type Code*	Egress Point Description (examples: garage door, 12 X 30 feet, west wall; outside gravel storage piles; etc.)	Fugitive Egress Point Height from the Ground (ft)	Minimum Distance to the Property Line (ft)	Exit Gas Temp. (F)

Section II - Specific Air Contaminant Source Information

*Type codes for fugitive egress point:

D. door or window
E. other opening in the building without a duct
F. no stack and no building enclosing the air contaminant source (e.g., roadways)

Complete Table 7-C below for each Stack Egress Point identified in Table 7-A above. In each case, use the dimensions of the largest nearby building, building segment or structure. List each individual egress point on a separate line. Use the same Company Name or ID for the Egress Point in Table 7-C that was used in Table 7-A. See the line by line PTI instructions for additional information.

Table 7-C, Egress Point Additional Information (Add rows as necessary)			
Company ID or Name for the Egress Point	**Building Height (ft)**	**Building Width (ft)**	**Building Length (ft)**
TRANSFER TOWER 3 (by feedstock piles)	50	120	700

8. Request for Federally Enforceable Limits

As part of this permit application, do you wish to propose voluntary restrictions to limit emissions in order to avoid specific requirements listed below, (i.e., are you requesting federally enforceable limits to obtain synthetic minor status)?

☐ yes
☒ no
☐ not sure - please contact me if this affects me

If yes, why are you requesting federally enforceable limits? Check all that apply.

a. ☐ to avoid being a major source (see OAC rule 3745-77-01)
b. ☐ to avoid being a major MACT source (see OAC rule 3745-31-01)
c. ☐ to avoid being a major modification (see OAC rule 3745-31-01)
d. ☐ to avoid being a major stationary source (see OAC rule 3745-31-01)
e. ☐ to avoid an air dispersion modeling requirement (see Engineering Guide # 69)
f. ☐ to avoid another requirement. Describe: _____

If you checked a., b. or d., please attach a facility-wide potential to emit (PTE) analysis (for each pollutant) and synthetic minor strategy to this application. (See line by line instructions for definition of PTE.) If you checked c., please attach a net emission change analysis to this application.

9. If this air contaminant source utilizes any continuous emissions monitoring equipment for indicating or demonstrating compliance, complete the following table. This does not include continuous parametric monitoring systems.

Company ID for Egress Point	**Type of Monitor**	**Applicable performance specification (40 CFR 60, Appendix B)**	**Pollutant(s) Monitored**

10. Do you wish to permit this air contaminant source as a portable source, allowing relocation within the state in accordance with OAC rule 3745-31-03 or OAC rule 3745-31-05?

Section II - Specific Air Contaminant Source Information

☐ yes - Note: notification requirements in rules cited above must be followed.
☒ no

11. The appropriate Emissions Activity Category (EAC) form(s) must be completed and attached for each air contaminant source. At least one complete EAC form must be submitted for each air contaminant source for the application to be considered complete. Refer to the list attached to the PTI instructions.

Section II - Specific Air Contaminant Source Information

NOTE: One copy of this section should be filled out for each air contaminant source covered by this PTI application. See the line by line PTI instructions for additional information.

1. Company identification (name for air contaminant source for which you are applying): TRANSFER TOWER 4

2. List all equipment that are part of this air contaminant source: TRANSFER TOWER 4

3. Air Contaminant Source Installation or Modification Schedule (must be completed regardless of date of installation or modification):

   When did/will you begin to install or modify the air contaminant source? (month/year) SECOND QUARTER 2008

   When did/will you begin to operate the air contaminant source? (month/year) THIRD QUARTER 2011 **OR** after issuance of PTI _____

4. Emissions Information: The following table requests information needed to determine the applicable requirements and the compliance status of this air contaminant source with those requirements. Suggestions for how to estimate emissions may be found in the instructions to the Emissions Activity Category (EAC) forms required with this application. If you need further assistance, contact your Ohio EPA permit representative.

   - If total potential emissions of HAPs or any Air Toxic is greater than 1 ton/yr, fill in the table for that (those) pollutant(s). For all other pollutants, if "Emissions before controls (max), lb/hr" multiplied by 24 hours/day is greater than 10 lb/day, fill in the table for that pollutant.
   - If you have no add-on control equipment, "Emissions before controls= will be the same as "Actual emissions"
   - Annual emissions should be based on operating 8760 hr/yr unless you are requesting operating restrictions to limit emissions in line # 8 or have described inherent limitations below.
   - If you use units other than lb/hr or ton/yr, specify the units used (e.g., gr/dscf, lb/ton charged, lb/MMBtu, ton/12-months).
   - Requested Allowable (ton/yr) is often equivalent to Potential to Emit (PTE) as defined in OAC rule 3745-31-01 and OAC rule 3745-77-01.

Pollutant	Emissions before controls (max) (lb/hr)	Actual emissions (lb/hr)	Actual emissions (ton/year)	Requested Allowable (lb/hr)	Requested Allowable (ton/year)
Particulate emissions (PE) (formerly particulate matter, PM)	700	0.9	3.9	0.9	3.9
PM_{10} (PM < 10 microns in diameter)	700	0.9	3.9	0.9	3.9
Sulfur dioxide (SO_2)	0	0	0	0	0
Nitrogen oxides (NO_x)	0	0	0	0	0
Carbon monoxide (CO)	0	0	0	0	0
Organic compounds (OC)	0	0	0	0	0
Volatile organic compounds (VOC)	0	0	0	0	0
Total HAPs	0	0	0	0	0
Highest single HAP:	0	0	0	0	0
Air Toxics (see instructions):	0	0	0	0	0

Provide your calculations as an attachment and explain how all process variables and emission factors were selected. Note the emissions factor(s) employed and document the origin. Example: AP-42, Table 4.4-3 (8/97); stack test, Method 5, 4/96; mass balance based on MSDS; etc.

Section II - Specific Air Contaminant Source Information

5. **Does this air contaminant source employ emissions control equipment?**

☒ **Yes** - fill out the applicable information below.

☐ **No** - proceed to item # 6.

Note: Pollutant abbreviations used below: Particulates = PE; Organic compounds = OC; Sulfur dioxide = SO_2; Nitrogen oxides = NOx; Carbon monoxide = CO

☐ **Cyclone/Multiclone**

Manufacturer: _____ Year installed: _____
What do you call this control equipment: _____
Pollutant(s) controlled: ☐ PE ☐ OC ☐ SO_2 ☐ NOx ☐ CO ☐ Other _____
Estimated capture efficiency (%): _____ Basis for efficiency: _____
Design control efficiency (%): _____ Basis for efficiency: _____
Type: ☐ Cyclone ☐ Multiclone ☐ Rotoclone ☐ Other _____
☐ This is the only control equipment on this air contaminant source
If no, this control equipment is: ☐ Primary ☐ Secondary ☐ Parallel
List any other air contaminant sources that are also vented to this control equipment:
_____

☒ **Fabric Filter/Baghouse**

Manufacturer: TO BE DETERMINED Year installed: NEW FACILITY
What do you call this control equipment: FEEDSTOCK PROCESSING BAGHOUSE 4
Pollutant(s) controlled: ☒ PE ☐ OC ☐ SO_2 ☐ NOx ☐ CO ☐ Other _____
Estimated capture efficiency (%):100 Basis for efficiency: ENGINEERING DESIGN
Design control efficiency (%):99.9 Basis for efficiency: LITERATURE
Operating pressure drop range (inches of water): Minimum: 3 Maximum: 6
Pressure type: ☒ Negative pressure ☐ Positive pressure
Fabric cleaning mechanism: ☐ Reverse air ☒ Pulse jet ☐ Shaker ☐ Other _____
☐ Lime injection or fabric coating agent used: Type: _____ Feed rate: _____
☒ This is the only control equipment on this air contaminant source
If no, this control equipment is: ☐ Primary ☐ Secondary ☐ Parallel
List any other air contaminant sources that are also vented to this control equipment:
_____

☐ **Wet Scrubber**

Manufacturer: _____ Year installed: _____
What do you call this control equipment: _____
Pollutant(s) controlled: ☐ PE ☐ OC ☐ SO_2 ☐ NOx ☐ CO ☐ Other _____
Estimated capture efficiency (%): _____ Basis for efficiency: _____
Design control efficiency (%): _____ Basis for efficiency: _____
Type: ☐ Spray chamber ☐ Packed bed ☐ Impingement ☐ Venturi ☐ Other _____
Operating pressure drop range (inches of water): Minimum: _____ Maximum: _____
pH range for scrubbing liquid: Minimum: _____ Maximum: _____
Scrubbing liquid flow rate (gal/min): _____
Is scrubber liquid recirculated? ☐ Yes ☐ No
Water supply pressure (psig): _____ NOTE: This item for spray chambers only.
☐ This is the only control equipment on this air contaminant source
If no, this control equipment is: ☐ Primary ☐ Secondary ☐ Parallel
List any other air contaminant sources that are also vented to this control equipment:
_____

☐ **Electrostatic Precipitator**

Manufacturer: _____ Year installed: _____
What do you call this control equipment: _____
Pollutant(s) controlled: ☐ PE ☐ OC ☐ SO_2 ☐ NOx ☐ CO ☐ Other _____
Estimated capture efficiency (%): _____ Basis for efficiency: _____
Design control efficiency (%): _____ Basis for efficiency: _____

Section II - Specific Air Contaminant Source Information

Type: ☐ Plate-wire ☐ Flat-plate ☐ Tubular ☐ Wet ☐ Other _____
Number of operating fields: _____

☐ This is the only control equipment on this air contaminant source
If no, this control equipment is: ☐ Primary ☐ Secondary ☐ Parallel
List any other air contaminant sources that are also vented to this control equipment:
_____

☐ **Concentrator**
Manufacturer: _____ Year installed: _____
What do you call this control equipment: _____
Pollutant(s) controlled: ☐ PE ☐ OC ☐ SO_2 ☐ NOx ☐ CO ☐ Other _____
Estimated capture efficiency (%):_____ Basis for efficiency: _____
Design regeneration cycle time (minutes): _____
Minimum desorption air stream temperature (°F): _____
Rotational rate (revolutions/hour): _____
☐ This is the only control equipment on this air contaminant source
If no, this control equipment is: ☐ Primary ☐ Secondary ☐ Parallel
List any other air contaminant sources that are also vented to this control equipment:
_____

☐ **Catalytic Incinerator**
Manufacturer: _____ Year installed: _____
What do you call this control equipment: _____
Pollutant(s) controlled: ☐ PE ☐ OC ☐ SO_2 ☐ NOx ☐ CO ☐ Other _____
Estimated capture efficiency (%):_____ Basis for efficiency: _____
Design control efficiency (%):_____ Basis for efficiency: _____
Minimum inlet gas temperature (°F): _____
Combustion chamber residence time (seconds): _____
Minimum temperature difference (°F) across catalyst during air contaminant source operation: _____
☐ This is the only control equipment on this air contaminant source
If no, this control equipment is: ☐ Primary ☐ Secondary ☐ Parallel
List any other air contaminant sources that are also vented to this control equipment:
_____

☐ **Thermal Incinerator/Thermal Oxidizer**
Manufacturer: _____ Year installed: _____
What do you call this control equipment: _____
Pollutant(s) controlled: ☐ PE ☐ OC ☐ SO_2 ☐ NOx ☐ CO ☐ Other _____
Estimated capture efficiency (%):_____ Basis for efficiency: _____
Design control efficiency (%):_____ Basis for efficiency: _____
Minimum operating temperature (°F) and location: _____ (See line by line instructions.)
Combustion chamber residence time (seconds): _____
☐ This is the only control equipment on this air contaminant source
If no, this control equipment is: ☐ Primary ☐ Secondary ☐ Parallel
List any other air contaminant sources that are also vented to this control equipment:
_____

☐ **Flare**
Manufacturer: _____ Year installed: _____
What do you call this control equipment: _____
Pollutant(s) controlled: ☐ PE ☐ OC ☐ SO_2 ☐ NOx ☐ CO ☐ Other _____
Estimated capture efficiency (%):_____ Basis for efficiency: _____
Design control efficiency (%):_____ Basis for efficiency: _____
Type: ☐ Enclosed ☐ Elevated (open)
Ignition device: ☐ Electric arc ☐ Pilot flame
Flame presence sensor: ☐ Yes ☐ No
☐ This is the only control equipment on this air contaminant source
If no, this control equipment is: ☐ Primary ☐ Secondary ☐ Parallel
List any other air contaminant sources that are also vented to this control equipment:

Section II - Specific Air Contaminant Source Information

☐ **Condenser**
Manufacturer: _____ Year installed: _____
What do you call this control equipment: _____
Pollutant(s) controlled: ☐ PE ☐ OC ☐ SO_2 ☐ NOx ☐ CO ☐ Other _____
Estimated capture efficiency (%): _____ Basis for efficiency: _____
Design control efficiency (%): _____ Basis for efficiency: _____

Type: ☐ Indirect contact ☐ Direct contact
Maximum exhaust gas temperature (°F) during air contaminant source operation: _____
Coolant type: _____
Design coolant temperature (°F): Minimum _____ Maximum _____
Design coolant flow rate (gpm): _____
☐ This is the only control equipment on this air contaminant source
If no, this control equipment is: ☐ Primary ☐ Secondary ☐ Parallel
List any other air contaminant sources that are also vented to this control equipment:
_____

☐ **Carbon Absorber**
Manufacturer: _____ Year installed: _____
What do you call this control equipment: _____
Pollutant(s) controlled: ☐ PE ☐ OC ☐ SO_2 ☐ NOx ☐ CO ☐ Other _____
Estimated capture efficiency (%): _____ Basis for efficiency: _____
Design control efficiency (%): _____ Basis for efficiency: _____
Type: ☐ On-site regenerative ☐ Disposable
Maximum design outlet organic compound concentration (ppmv): _____
Carbon replacement frequency or regeneration cycle time (specify units): _____
Maximum temperature of the carbon bed, after regeneration (including any cooling cycle): _____
☐ This is the only control equipment on this air contaminant source
If no, this control equipment is: ☐ Primary ☐ Secondary ☐ Parallel
List any other air contaminant sources that are also vented to this control equipment:
_____

☐ **Dry Scrubber**
Manufacturer: _____ Year installed: _____
What do you call this control equipment: _____
Pollutant(s) controlled: ☐ PE ☐ OC ☐ SO_2 ☐ NOx ☐ CO ☐ Other _____
Estimated capture efficiency (%): _____ Basis for efficiency: _____
Design control efficiency (%): _____ Basis for efficiency: _____
Reagent(s) used: Type: _____ Injection rate(s): _____
Operating pressure drop range (inches of water): Minimum: _____ Maximum: _____
☐ This is the only control equipment on this air contaminant source
If no, this control equipment is: ☐ Primary ☐ Secondary ☐ Parallel
List any other air contaminant sources that are also vented to this control equipment:
_____

☐ **Paint booth filter**
Type: ☐ Paper ☐ Fiberglass ☐ Water curtain ☐ Other _____
Design control efficiency (%): _____ Basis for efficiency: _____

☐ **Other,** describe _____
Manufacturer: _____ Year installed: _____
What do you call this control equipment: _____
Pollutant(s) controlled: ☐ PE ☐ OC ☐ SO_2 ☐ NOx ☐ CO ☐ Other
Estimated capture efficiency (%): _____ Basis for efficiency: _____

Design control efficiency (%): _____ Basis for efficiency: _____
☐ This is the only control equipment on this air contaminant source
If no, this control equipment is: ☐ Primary ☐ Secondary ☐ Parallel

Section II - Specific Air Contaminant Source Information

List any other air contaminant sources that are also vented to this control equipment:

_____

6. Attach a Process or Activity Flow Diagram to this application for each air contaminant source included in the application. The diagram should indicate their relationships to one another. See the line by line PTI instructions for additional information.

7. Emissions egress point(s) information: PTIs which allow total emissions in excess of the thresholds listed below will be subject to an air quality modeling analysis. This analysis is to assure that the impact from the requested project will not exceed Ohio=s Acceptable Incremental Impacts for criteria pollutants and/or Maximum Allowable Ground Level Concentrations (MAGLC) for air toxics. Permit requests that would have unacceptable impacts can not be approved as proposed. See the line by line PTI instructions for additional information.

   Complete the tables below if the requested allowable annual emission rate for this PTI exceeds any of the following:

   - Particulate Matter (PM10): 10 tons per year
   - Sulfur Dioxide (SO2): 25 tons per year
   - Nitrogen Oxides (NOx): 25 tons per year
   - Carbon Monoxide (CO): 100 tons per year
   - Air Toxic: 1 ton per year. An air toxic is any air pollutant for which the American Council of Governmental Industrial Hygienists (ACGIH) has established a Threshold Limit Value (TLV).

   Complete Table 7-A below for each stack emissions egress point. An egress point is a point at which emissions from an air contaminant source are released into the ambient (outside) air. List each individual egress point on a separate line.

Table 7-A, Stack Egress Point Information

Company Name or ID for the Egress Point (examples: Stack A; Boiler Stack; etc.)	Type Code*	Stack Egress Point Shape and Dimensions (in)(examples: round 10 inch ID; rectangular 14 X 16 inches; etc.)	Stack Egress Point Height from the Ground (ft)	Stack Temp. at Max. Capacity (F)	Stack Flow Rate at Max. Capacity (ACFM)	Minimum Distance to the Property Line (ft)
TRANSFER TOWER 4	A	RECT. 2 FT X 3 FT	100	68	21,000	1,400

*Type codes for stack egress points:

A. vertical stack (unobstructed): There are no obstructions to upward flow in or on the stack such as a rain cap.
B. vertical stack (obstructed): There are obstructions to the upward flow, such as a rain cap, which prevents or inhibits the air flow in a vertical direction.
C. non-vertical stack: The stack directs the air flow in a direction which is not directly upward.

Complete Table 7-B below for each fugitive emissions egress point. List each individual egress point on a separate line. Refer to the description of the fugitive egress point type codes below the table for use in completing the type code column of the table. For air contaminant sources like roadways and storage piles, only the first 5 columns need to be completed. For an air contaminant source with multiple fugitive emissions egress points, include only the primary egress points.

Table 7-B, Fugitive Egress Point Information

Company ID for the Egress Point (examples; Garage Door B, Building C; Roof Monitor; etc.)	Type Code*	Egress Point Description (examples: garage door, 12 X 30 feet, west wall; outside gravel storage piles; etc.)	Fugitive Egress Point Height from the Ground (ft)	Minimum Distance to the Property Line (ft)	Exit Gas Temp. (F)

Section II - Specific Air Contaminant Source Information

*Type codes for fugitive egress point:

D. door or window
E. other opening in the building without a duct
F. no stack and no building enclosing the air contaminant source (e.g., roadways)

Complete Table 7-C below for each Stack Egress Point identified in Table 7-A above. In each case, use the dimensions of the largest nearby building, building segment or structure. List each individual egress point on a separate line. Use the same Company Name or ID for the Egress Point in Table 7-C that was used in Table 7-A. See the line by line PTI instructions for additional information.

Table 7-C, Egress Point Additional Information (Add rows as necessary)			
Company ID or Name for the Egress Point	**Building Height (ft)**	**Building Width (ft)**	**Building Length (ft)**
TRANSFER TOWER 4 (by coal & biomass hopper building)	20	80	150

8. Request for Federally Enforceable Limits

As part of this permit application, do you wish to propose voluntary restrictions to limit emissions in order to avoid specific requirements listed below, (i.e., are you requesting federally enforceable limits to obtain synthetic minor status)?

☐ yes
☒ no
☐ not sure - please contact me if this affects me

If yes, why are you requesting federally enforceable limits? Check all that apply.

a. ☐ to avoid being a major source (see OAC rule 3745-77-01)
b. ☐ to avoid being a major MACT source (see OAC rule 3745-31-01)
c. ☐ to avoid being a major modification (see OAC rule 3745-31-01)
d. ☐ to avoid being a major stationary source (see OAC rule 3745-31-01)
e. ☐ to avoid an air dispersion modeling requirement (see Engineering Guide # 69)
f. ☐ to avoid another requirement. Describe: _____

If you checked a., b. or d., please attach a facility-wide potential to emit (PTE) analysis (for each pollutant) and synthetic minor strategy to this application. (See line by line instructions for definition of PTE.) If you checked c., please attach a net emission change analysis to this application.

9. If this air contaminant source utilizes any continuous emissions monitoring equipment for indicating or demonstrating compliance, complete the following table. This does not include continuous parametric monitoring systems.

Company ID for Egress Point	Type of Monitor	Applicable performance specification (40 CFR 60, Appendix B)	Pollutant(s) Monitored

10. Do you wish to permit this air contaminant source as a portable source, allowing relocation within the state in accordance

Section II - Specific Air Contaminant Source Information

with OAC rule 3745-31-03 or OAC rule 3745-31-05?

☐ yes - Note: notification requirements in rules cited above must be followed.
☒ no

11. The appropriate Emissions Activity Category (EAC) form(s) must be completed and attached for each air contaminant source. At least one complete EAC form must be submitted for each air contaminant source for the application to be considered complete. Refer to the list attached to the PTI instructions.

Section II - Specific Air Contaminant Source Information

NOTE: One copy of this section should be filled out for each air contaminant source covered by this PTI application. See the line by line PTI instructions for additional information.

1. Company identification (name for air contaminant source for which you are applying): TRANSFER TOWER 5

2. List all equipment that are part of this air contaminant source: TRANSFER TOWER 5

3. Air Contaminant Source Installation or Modification Schedule (must be completed regardless of date of installation or modification):

   When did/will you begin to install or modify the air contaminant source? (month/year) SECOND QUARTER 2008

   When did/will you begin to operate the air contaminant source? (month/year) THIRD QUARTER 2011 **OR** after issuance of PTI _____

4. Emissions Information: The following table requests information needed to determine the applicable requirements and the compliance status of this air contaminant source with those requirements. Suggestions for how to estimate emissions may be found in the instructions to the Emissions Activity Category (EAC) forms required with this application. If you need further assistance, contact your Ohio EPA permit representative.

   - If total potential emissions of HAPs or any Air Toxic is greater than 1 ton/yr, fill in the table for that (those) pollutant(s). For all other pollutants, if "Emissions before controls (max), lb/hr" multiplied by 24 hours/day is greater than 10 lb/day, fill in the table for that pollutant.
   - If you have no add-on control equipment, "Emissions before controls= will be the same as "Actual emissions"
   - Annual emissions should be based on operating 8760 hr/yr unless you are requesting operating restrictions to limit emissions in line # 8 or have described inherent limitations below.
   - If you use units other than lb/hr or ton/yr, specify the units used (e.g., gr/dscf, lb/ton charged, lb/MMBtu, ton/12-months).
   - Requested Allowable (ton/yr) is often equivalent to Potential to Emit (PTE) as defined in OAC rule 3745-31-01 and OAC rule 3745-77-01.

Pollutant	Emissions before controls (max) (lb/hr)	Actual emissions (lb/hr)	Actual emissions (ton/year)	Requested Allowable (lb/hr)	Requested Allowable (ton/year)
Particulate emissions (PE) (formerly particulate matter, PM)	700	0.9	3.9	0.9	3.9
PM_{10} (PM < 10 microns in diameter)	700	0.9	3.9	0.9	3.9
Sulfur dioxide (SO_2)	0	0	0	0	0
Nitrogen oxides (NO_x)	0	0	0	0	0
Carbon monoxide (CO)	0	0	0	0	0
Organic compounds (OC)	0	0	0	0	0
Volatile organic compounds (VOC)	0	0	0	0	0
Total HAPs	0	0	0	0	0
Highest single HAP:	0	0	0	0	0
Air Toxics (see instructions):	0	0	0	0	0

Provide your calculations as an attachment and explain how all process variables and emission factors were selected. Note the emissions factor(s) employed and document the origin. Example: AP-42, Table 4.4-3 (8/97); stack test, Method 5, 4/96; mass balance based on MSDS; etc.

Section II - Specific Air Contaminant Source Information

5. **Does this air contaminant source employ emissions control equipment?**

☒ **Yes** - fill out the applicable information below.

☐ **No** - proceed to item # 6.

Note: Pollutant abbreviations used below: Particulates = PE; Organic compounds = OC; Sulfur dioxide = SO_2; Nitrogen oxides = NOx; Carbon monoxide = CO

☐ **Cyclone/Multiclone**
Manufacturer: _____ Year installed: _____
What do you call this control equipment: _____
Pollutant(s) controlled: ☐ PE ☐ OC ☐ SO_2 ☐ NOx ☐ CO ☐ Other _____
Estimated capture efficiency (%): _____ Basis for efficiency: _____
Design control efficiency (%): _____ Basis for efficiency: _____
Type: ☐ Cyclone ☐ Multiclone ☐ Rotoclone ☐ Other _____
☐ This is the only control equipment on this air contaminant source
If no, this control equipment is: ☐ Primary ☐ Secondary ☐ Parallel
List any other air contaminant sources that are also vented to this control equipment:
_____

☒ **Fabric Filter/Baghouse**
Manufacturer: TO BE DETERMINED Year installed: NEW FACILITY
What do you call this control equipment: FEEDSTOCK PROCESSING BAGHOUSE 6
Pollutant(s) controlled: ☒ PE ☐ OC ☐ SO_2 ☐ NOx ☐ CO ☐ Other _____
Estimated capture efficiency (%):100 Basis for efficiency: ENGINEERING DESIGN
Design control efficiency (%):99.9 Basis for efficiency: LITERATURE
Operating pressure drop range (inches of water): Minimum: 3 Maximum: 6
Pressure type: ☒ Negative pressure ☐ Positive pressure
Fabric cleaning mechanism: ☐ Reverse air ☒ Pulse jet ☐ Shaker ☐ Other _____
☐ Lime injection or fabric coating agent used: Type: _____ Feed rate: _____
☒ This is the only control equipment on this air contaminant source
If no, this control equipment is: ☐ Primary ☐ Secondary ☐ Parallel
List any other air contaminant sources that are also vented to this control equipment:
_____

☐ **Wet Scrubber**
Manufacturer: _____ Year installed: _____
What do you call this control equipment: _____
Pollutant(s) controlled: ☐ PE ☐ OC ☐ SO_2 ☐ NOx ☐ CO ☐ Other _____
Estimated capture efficiency (%): _____ Basis for efficiency: _____
Design control efficiency (%): _____ Basis for efficiency: _____
Type: ☐ Spray chamber ☐ Packed bed ☐ Impingement ☐ Venturi ☐ Other _____
Operating pressure drop range (inches of water): Minimum: _____ Maximum: _____
pH range for scrubbing liquid: Minimum: _____ Maximum: _____
Scrubbing liquid flow rate (gal/min): _____
Is scrubber liquid recirculated? ☐ Yes ☐ No
Water supply pressure (psig): _____ NOTE: This item for spray chambers only.
☐ This is the only control equipment on this air contaminant source
If no, this control equipment is: ☐ Primary ☐ Secondary ☐ Parallel
List any other air contaminant sources that are also vented to this control equipment:
_____

☐ **Electrostatic Precipitator**
Manufacturer: _____ Year installed: _____
What do you call this control equipment: _____
Pollutant(s) controlled: ☐ PE ☐ OC ☐ SO_2 ☐ NOx ☐ CO ☐ Other _____
Estimated capture efficiency (%): _____ Basis for efficiency: _____
Design control efficiency (%): _____ Basis for efficiency: _____

Section II - Specific Air Contaminant Source Information

Type: ☐ Plate-wire ☐ Flat-plate ☐ Tubular ☐ Wet ☐ Other _____
Number of operating fields: _____

☐ This is the only control equipment on this air contaminant source
If no, this control equipment is: ☐ Primary ☐ Secondary ☐ Parallel
List any other air contaminant sources that are also vented to this control equipment:
_____

☐ **Concentrator**
Manufacturer: _____ Year installed: _____
What do you call this control equipment: _____
Pollutant(s) controlled: ☐ PE ☐ OC ☐ SO_2 ☐ NOx ☐ CO ☐ Other _____
Estimated capture efficiency (%): _____ Basis for efficiency: _____
Design regeneration cycle time (minutes): _____
Minimum desorption air stream temperature (°F): _____
Rotational rate (revolutions/hour): _____
☐ This is the only control equipment on this air contaminant source
If no, this control equipment is: ☐ Primary ☐ Secondary ☐ Parallel
List any other air contaminant sources that are also vented to this control equipment:
_____

☐ **Catalytic Incinerator**
Manufacturer: _____ Year installed: _____
What do you call this control equipment: _____
Pollutant(s) controlled: ☐ PE ☐ OC ☐ SO_2 ☐ NOx ☐ CO ☐ Other _____
Estimated capture efficiency (%): _____ Basis for efficiency: _____
Design control efficiency (%): _____ Basis for efficiency: _____
Minimum inlet gas temperature (°F): _____
Combustion chamber residence time (seconds): _____
Minimum temperature difference (°F) across catalyst during air contaminant source operation: _____
☐ This is the only control equipment on this air contaminant source
If no, this control equipment is: ☐ Primary ☐ Secondary ☐ Parallel
List any other air contaminant sources that are also vented to this control equipment:
_____

☐ **Thermal Incinerator/Thermal Oxidizer**
Manufacturer: _____ Year installed: _____
What do you call this control equipment: _____
Pollutant(s) controlled: ☐ PE ☐ OC ☐ SO_2 ☐ NOx ☐ CO ☐ Other _____
Estimated capture efficiency (%): _____ Basis for efficiency: _____
Design control efficiency (%): _____ Basis for efficiency: _____
Minimum operating temperature (°F) and location: _____ (See line by line instructions.)
Combustion chamber residence time (seconds): _____
☐ This is the only control equipment on this air contaminant source
If no, this control equipment is: ☐ Primary ☐ Secondary ☐ Parallel
List any other air contaminant sources that are also vented to this control equipment:
_____

☐ **Flare**
Manufacturer: _____ Year installed: _____
What do you call this control equipment: _____
Pollutant(s) controlled: ☐ PE ☐ OC ☐ SO_2 ☐ NOx ☐ CO ☐ Other _____
Estimated capture efficiency (%): _____ Basis for efficiency: _____
Design control efficiency (%): _____ Basis for efficiency: _____
Type: ☐ Enclosed ☐ Elevated (open)
Ignition device: ☐ Electric arc ☐ Pilot flame
Flame presence sensor: ☐ Yes ☐ No
☐ This is the only control equipment on this air contaminant source
If no, this control equipment is: ☐ Primary ☐ Secondary ☐ Parallel
List any other air contaminant sources that are also vented to this control equipment:

Section II - Specific Air Contaminant Source Information

☐ **Condenser**
Manufacturer: _____ Year installed: _____
What do you call this control equipment: _____
Pollutant(s) controlled: ☐ PE ☐ OC ☐ SO_2 ☐ NOx ☐ CO ☐ Other _____
Estimated capture efficiency (%): _____ Basis for efficiency: _____
Design control efficiency (%): _____ Basis for efficiency: _____

Type: ☐ Indirect contact ☐ Direct contact
Maximum exhaust gas temperature (°F) during air contaminant source operation: _____
Coolant type: _____
Design coolant temperature (°F): Minimum _____ Maximum _____
Design coolant flow rate (gpm): _____
☐ This is the only control equipment on this air contaminant source
If no, this control equipment is: ☐ Primary ☐ Secondary ☐ Parallel
List any other air contaminant sources that are also vented to this control equipment:
_____

☐ **Carbon Absorber**
Manufacturer: _____ Year installed: _____
What do you call this control equipment: _____
Pollutant(s) controlled: ☐ PE ☐ OC ☐ SO_2 ☐ NOx ☐ CO ☐ Other _____
Estimated capture efficiency (%): _____ Basis for efficiency: _____
Design control efficiency (%): _____ Basis for efficiency: _____
Type: ☐ On-site regenerative ☐ Disposable
Maximum design outlet organic compound concentration (ppmv): _____
Carbon replacement frequency or regeneration cycle time (specify units): _____
Maximum temperature of the carbon bed, after regeneration (including any cooling cycle): _____
☐ This is the only control equipment on this air contaminant source
If no, this control equipment is: ☐ Primary ☐ Secondary ☐ Parallel
List any other air contaminant sources that are also vented to this control equipment:
_____

☐ **Dry Scrubber**
Manufacturer: _____ Year installed: _____
What do you call this control equipment: _____
Pollutant(s) controlled: ☐ PE ☐ OC ☐ SO_2 ☐ NOx ☐ CO ☐ Other _____
Estimated capture efficiency (%): _____ Basis for efficiency: _____
Design control efficiency (%): _____ Basis for efficiency: _____
Reagent(s) used: Type: _____ Injection rate(s): _____
Operating pressure drop range (inches of water): Minimum: _____ Maximum: _____
☐ This is the only control equipment on this air contaminant source
If no, this control equipment is: ☐ Primary ☐ Secondary ☐ Parallel
List any other air contaminant sources that are also vented to this control equipment:
_____

☐ **Paint booth filter**
Type: ☐ Paper ☐ Fiberglass ☐ Water curtain ☐ Other _____
Design control efficiency (%): _____ Basis for efficiency: _____

☐ **Other**, describe _____
Manufacturer: _____ Year installed: _____
What do you call this control equipment: _____
Pollutant(s) controlled: ☐ PE ☐ OC ☐ SO_2 ☐ NOx ☐ CO ☐ Other
Estimated capture efficiency (%): _____ Basis for efficiency: _____

Design control efficiency (%): _____ Basis for efficiency: _____
☐ This is the only control equipment on this air contaminant source
If no, this control equipment is: ☐ Primary ☐ Secondary ☐ Parallel

Section II - Specific Air Contaminant Source Information

List any other air contaminant sources that are also vented to this control equipment:

6. Attach a Process or Activity Flow Diagram to this application for each air contaminant source included in the application. The diagram should indicate their relationships to one another. See the line by line PTI instructions for additional information.

7. Emissions egress point(s) information: PTIs which allow total emissions in excess of the thresholds listed below will be subject to an air quality modeling analysis. This analysis is to assure that the impact from the requested project will not exceed Ohio=s Acceptable Incremental Impacts for criteria pollutants and/or Maximum Allowable Ground Level Concentrations (MAGLC) for air toxics. Permit requests that would have unacceptable impacts can not be approved as proposed. See the line by line PTI instructions for additional information.

   Complete the tables below if the requested allowable annual emission rate for this PTI exceeds any of the following:

   - Particulate Matter (PM10): 10 tons per year
   - Sulfur Dioxide (SO2): 25 tons per year
   - Nitrogen Oxides (NOx): 25 tons per year
   - Carbon Monoxide (CO): 100 tons per year
   - Air Toxic: 1 ton per year. An air toxic is any air pollutant for which the American Council of Governmental Industrial Hygienists (ACGIH) has established a Threshold Limit Value (TLV).

   Complete Table 7-A below for each stack emissions egress point. An egress point is a point at which emissions from an air contaminant source are released into the ambient (outside) air. List each individual egress point on a separate line.

Table 7-A, Stack Egress Point Information

Company Name or ID for the Egress Point (examples: Stack A; Boiler Stack; etc.)	Type Code*	Stack Egress Point Shape and Dimensions (in)(examples: round 10 inch ID; rectangular 14 X 16 inches; etc.)	Stack Egress Point Height from the Ground (ft)	Stack Temp. at Max. Capacity (F)	Stack Flow Rate at Max. Capacity (ACFM)	Minimum Distance to the Property Line (ft)
TRANSFER TOWER 5	A	RECT. 2 FT X 3 FT	100	68	21,000	1,300

*Type codes for stack egress points:

A. vertical stack (unobstructed): There are no obstructions to upward flow in or on the stack such as a rain cap.
B. vertical stack (obstructed): There are obstructions to the upward flow, such as a rain cap, which prevents or inhibits the air flow in a vertical direction.
C. non-vertical stack: The stack directs the air flow in a direction which is not directly upward.

Complete Table 7-B below for each fugitive emissions egress point. List each individual egress point on a separate line. Refer to the description of the fugitive egress point type codes below the table for use in completing the type code column of the table. For air contaminant sources like roadways and storage piles, only the first 5 columns need to be completed. For an air contaminant source with multiple fugitive emissions egress points, include only the primary egress points.

Table 7-B, Fugitive Egress Point Information

Company ID for the Egress Point (examples; Garage Door B, Building C; Roof Monitor; etc.)	Type Code*	Egress Point Description (examples: garage door, 12 X 30 feet, west wall; outside gravel storage piles; etc.)	Fugitive Egress Point Height from the Ground (ft)	Minimum Distance to the Property Line (ft)	Exit Gas Temp. (F)

Section II - Specific Air Contaminant Source Information

*Type codes for fugitive egress point:

D. door or window
E. other opening in the building without a duct
F. no stack and no building enclosing the air contaminant source (e.g., roadways)

Complete Table 7-C below for each Stack Egress Point identified in Table 7-A above. In each case, use the dimensions of the largest nearby building, building segment or structure. List each individual egress point on a separate line. Use the same Company Name or ID for the Egress Point in Table 7-C that was used in Table 7-A. See the line by line PTI instructions for additional information.

Table 7-C, Egress Point Additional Information (Add rows as necessary)			
Company ID or Name for the Egress Point	**Building Height (ft)**	**Building Width (ft)**	**Building Length (ft)**
TRANSFER TOWER 5 (by gasification)	200	100	150

8. Request for Federally Enforceable Limits

As part of this permit application, do you wish to propose voluntary restrictions to limit emissions in order to avoid specific requirements listed below, (i.e., are you requesting federally enforceable limits to obtain synthetic minor status)?

☐ yes
☒ no
☐ not sure - please contact me if this affects me

If yes, why are you requesting federally enforceable limits? Check all that apply.

a. ☐ to avoid being a major source (see OAC rule 3745-77-01)
b. ☐ to avoid being a major MACT source (see OAC rule 3745-31-01)
c. ☐ to avoid being a major modification (see OAC rule 3745-31-01)
d. ☐ to avoid being a major stationary source (see OAC rule 3745-31-01)
e. ☐ to avoid an air dispersion modeling requirement (see Engineering Guide # 69)
f. ☐ to avoid another requirement. Describe: _____

If you checked a., b. or d., please attach a facility-wide potential to emit (PTE) analysis (for each pollutant) and synthetic minor strategy to this application. (See line by line instructions for definition of PTE.) If you checked c., please attach a net emission change analysis to this application.

9. If this air contaminant source utilizes any continuous emissions monitoring equipment for indicating or demonstrating compliance, complete the following table. This does not include continuous parametric monitoring systems.

Company ID for Egress Point	Type of Monitor	Applicable performance specification (40 CFR 60, Appendix B)	Pollutant(s) Monitored

10. Do you wish to permit this air contaminant source as a portable source, allowing relocation within the state in accordance with OAC rule 3745-31-03 or OAC rule 3745-31-05?

Section II - Specific Air Contaminant Source Information

☐ yes - Note: notification requirements in rules cited above must be followed.
☒ no

11. The appropriate Emissions Activity Category (EAC) form(s) must be completed and attached for each air contaminant source. At least one complete EAC form must be submitted for each air contaminant source for the application to be considered complete. Refer to the list attached to the PTI instructions.

Section II - Specific Air Contaminant Source Information

NOTE: One copy of this section should be filled out for each air contaminant source covered by this PTI application. See the line by line PTI instructions for additional information.

1. Company identification (name for air contaminant source for which you are applying): COAL CRUSHER HOUSE

2. List all equipment that are part of this air contaminant source: COAL CRUSHER HOUSE

3. Air Contaminant Source Installation or Modification Schedule (must be completed regardless of date of installation or modification):

   When did/will you begin to install or modify the air contaminant source? (month/year) SECOND QUARTER 2008

   When did/will you begin to operate the air contaminant source? (month/year) THIRD QUARTER 2011 **OR** after issuance of PTI _____

4. Emissions Information: The following table requests information needed to determine the applicable requirements and the compliance status of this air contaminant source with those requirements. Suggestions for how to estimate emissions may be found in the instructions to the Emissions Activity Category (EAC) forms required with this application. If you need further assistance, contact your Ohio EPA permit representative.

   - If total potential emissions of HAPs or any Air Toxic is greater than 1 ton/yr, fill in the table for that (those) pollutant(s). For all other pollutants, if "Emissions before controls (max), lb/hr" multiplied by 24 hours/day is greater than 10 lb/day, fill in the table for that pollutant.
   - If you have no add-on control equipment, "Emissions before controls= will be the same as "Actual emissions"
   - Annual emissions should be based on operating 8760 hr/yr unless you are requesting operating restrictions to limit emissions in line # 8 or have described inherent limitations below.
   - If you use units other than lb/hr or ton/yr, specify the units used (e.g., gr/dscf, lb/ton charged, lb/MMBtu, ton/12-months).
   - Requested Allowable (ton/yr) is often equivalent to Potential to Emit (PTE) as defined in OAC rule 3745-31-01 and OAC rule 3745-77-01.

Pollutant	Emissions before controls (max) (lb/hr)	Actual emissions (lb/hr)	Actual emissions (ton/year)	Requested Allowable (lb/hr)	Requested Allowable (ton/year)
Particulate emissions (PE) (formerly particulate matter, PM)	1,140	1.2	5.1	1.2	5.1
PM_{10} (PM < 10 microns in diameter)	1,140	1.2	5.1	1.2	5.1
Sulfur dioxide (SO_2)	0	0	0	0	0
Nitrogen oxides (NO_x)	0	0	0	0	0
Carbon monoxide (CO)	0	0	0	0	0
Organic compounds (OC)	0	0	0	0	0
Volatile organic compounds (VOC)	0	0	0	0	0
Total HAPs	0	0	0	0	0
Highest single HAP:	0	0	0	0	0
Air Toxics (see instructions):	0	0	0	0	0

Provide your calculations as an attachment and explain how all process variables and emission factors were selected. Note the emissions factor(s) employed and document the origin. Example: AP-42, Table 4.4-3 (8/97); stack test, Method 5, 4/96; mass balance based on MSDS; etc.

Section II - Specific Air Contaminant Source Information

5. **Does this air contaminant source employ emissions control equipment?**

☒ **Yes** - fill out the applicable information below.

☐ **No** - proceed to item # 6.

Note: Pollutant abbreviations used below: Particulates = PE; Organic compounds = OC; Sulfur dioxide = SO_2; Nitrogen oxides = NOx; Carbon monoxide = CO

☐ **Cyclone/Multiclone**
Manufacturer: _____ Year installed: _____
What do you call this control equipment: _____
Pollutant(s) controlled: ☐ PE ☐ OC ☐ SO_2 ☐ NOx ☐ CO ☐ Other _____
Estimated capture efficiency (%): _____ Basis for efficiency: _____
Design control efficiency (%): _____ Basis for efficiency: _____
Type: ☐ Cyclone ☐ Multiclone ☐ Rotoclone ☐ Other _____
☐ This is the only control equipment on this air contaminant source
If no, this control equipment is: ☐ Primary ☐ Secondary ☐ Parallel
List any other air contaminant sources that are also vented to this control equipment:
_____

☒ **Fabric Filter/Baghouse**
Manufacturer: TO BE DETERMINED Year installed: NEW FACILITY
What do you call this control equipment: FEEDSTOCK PROCESSING BAGHOUSE 5
Pollutant(s) controlled: ☒ PE ☐ OC ☐ SO_2 ☐ NOx ☐ CO ☐ Other _____
Estimated capture efficiency (%): 100 Basis for efficiency: ENGINEERING DESIGN
Design control efficiency (%): 99.9 Basis for efficiency: LITERATURE
Operating pressure drop range (inches of water): Minimum: 3 Maximum: 6
Pressure type: ☒ Negative pressure ☐ Positive pressure
Fabric cleaning mechanism: ☐ Reverse air ☒ Pulse jet ☐ Shaker ☐ Other _____
☐ Lime injection or fabric coating agent used: Type: _____ Feed rate: _____
☒ This is the only control equipment on this air contaminant source
If no, this control equipment is: ☐ Primary ☐ Secondary ☐ Parallel
List any other air contaminant sources that are also vented to this control equipment:
_____

☐ **Wet Scrubber**
Manufacturer: _____ Year installed: _____
What do you call this control equipment: _____
Pollutant(s) controlled: ☐ PE ☐ OC ☐ SO_2 ☐ NOx ☐ CO ☐ Other _____
Estimated capture efficiency (%): _____ Basis for efficiency: _____
Design control efficiency (%): _____ Basis for efficiency: _____
Type: ☐ Spray chamber ☐ Packed bed ☐ Impingement ☐ Venturi ☐ Other _____
Operating pressure drop range (inches of water): Minimum: _____ Maximum: _____
pH range for scrubbing liquid: Minimum: _____ Maximum: _____
Scrubbing liquid flow rate (gal/min): _____
Is scrubber liquid recirculated? ☐ Yes ☐ No
Water supply pressure (psig): _____ NOTE: This item for spray chambers only.
☐ This is the only control equipment on this air contaminant source
If no, this control equipment is: ☐ Primary ☐ Secondary ☐ Parallel
List any other air contaminant sources that are also vented to this control equipment:
_____

☐ **Electrostatic Precipitator**
Manufacturer: _____ Year installed: _____
What do you call this control equipment: _____
Pollutant(s) controlled: ☐ PE ☐ OC ☐ SO_2 ☐ NOx ☐ CO ☐ Other _____
Estimated capture efficiency (%): _____ Basis for efficiency: _____
Design control efficiency (%): _____ Basis for efficiency: _____

Section II - Specific Air Contaminant Source Information

Type: ☐ Plate-wire ☐ Flat-plate ☐ Tubular ☐ Wet ☐ Other _____
Number of operating fields: _____

☐ This is the only control equipment on this air contaminant source
If no, this control equipment is: ☐ Primary ☐ Secondary ☐ Parallel
List any other air contaminant sources that are also vented to this control equipment:
_____

☐ **Concentrator**
Manufacturer: _____ Year installed: _____
What do you call this control equipment: _____
Pollutant(s) controlled: ☐ PE ☐ OC ☐ SO_2 ☐ NOx ☐ CO ☐ Other _____
Estimated capture efficiency (%): _____ Basis for efficiency: _____
Design regeneration cycle time (minutes): _____
Minimum desorption air stream temperature (°F): _____
Rotational rate (revolutions/hour): _____
☐ This is the only control equipment on this air contaminant source
If no, this control equipment is: ☐ Primary ☐ Secondary ☐ Parallel
List any other air contaminant sources that are also vented to this control equipment:
_____

☐ **Catalytic Incinerator**
Manufacturer: _____ Year installed: _____
What do you call this control equipment: _____
Pollutant(s) controlled: ☐ PE ☐ OC ☐ SO_2 ☐ NOx ☐ CO ☐ Other _____
Estimated capture efficiency (%): _____ Basis for efficiency: _____
Design control efficiency (%): _____ Basis for efficiency: _____
Minimum inlet gas temperature (°F): _____
Combustion chamber residence time (seconds): _____
Minimum temperature difference (°F) across catalyst during air contaminant source operation: _____
☐ This is the only control equipment on this air contaminant source
If no, this control equipment is: ☐ Primary ☐ Secondary ☐ Parallel
List any other air contaminant sources that are also vented to this control equipment:
_____

☐ **Thermal Incinerator/Thermal Oxidizer**
Manufacturer: _____ Year installed: _____
What do you call this control equipment: _____
Pollutant(s) controlled: ☐ PE ☐ OC ☐ SO_2 ☐ NOx ☐ CO ☐ Other _____
Estimated capture efficiency (%): _____ Basis for efficiency: _____
Design control efficiency (%): _____ Basis for efficiency: _____
Minimum operating temperature (°F) and location: _____ (See line by line instructions.)
Combustion chamber residence time (seconds): _____
☐ This is the only control equipment on this air contaminant source
If no, this control equipment is: ☐ Primary ☐ Secondary ☐ Parallel
List any other air contaminant sources that are also vented to this control equipment:
_____

☐ **Flare**
Manufacturer: _____ Year installed: _____
What do you call this control equipment: _____
Pollutant(s) controlled: ☐ PE ☐ OC ☐ SO_2 ☐ NOx ☐ CO ☐ Other _____
Estimated capture efficiency (%): _____ Basis for efficiency: _____
Design control efficiency (%): _____ Basis for efficiency: _____
Type: ☐ Enclosed ☐ Elevated (open)
Ignition device: ☐ Electric arc ☐ Pilot flame
Flame presence sensor: ☐ Yes ☐ No
☐ This is the only control equipment on this air contaminant source
If no, this control equipment is: ☐ Primary ☐ Secondary ☐ Parallel
List any other air contaminant sources that are also vented to this control equipment:

Section II - Specific Air Contaminant Source Information

☐ **Condenser**
Manufacturer: _____ Year installed: _____
What do you call this control equipment: _____
Pollutant(s) controlled: ☐ PE ☐ OC ☐ SO_2 ☐ NOx ☐ CO ☐ Other _____
Estimated capture efficiency (%): _____ Basis for efficiency: _____
Design control efficiency (%): _____ Basis for efficiency: _____

Type: ☐ Indirect contact ☐ Direct contact
Maximum exhaust gas temperature (°F) during air contaminant source operation: _____
Coolant type: _____
Design coolant temperature (°F): Minimum _____ Maximum _____
Design coolant flow rate (gpm): _____
☐ This is the only control equipment on this air contaminant source
If no, this control equipment is: ☐ Primary ☐ Secondary ☐ Parallel
List any other air contaminant sources that are also vented to this control equipment:
_____

☐ **Carbon Absorber**
Manufacturer: _____ Year installed: _____
What do you call this control equipment: _____
Pollutant(s) controlled: ☐ PE ☐ OC ☐ SO_2 ☐ NOx ☐ CO ☐ Other _____
Estimated capture efficiency (%): _____ Basis for efficiency: _____
Design control efficiency (%): _____ Basis for efficiency: _____
Type: ☐ On-site regenerative ☐ Disposable
Maximum design outlet organic compound concentration (ppmv): _____
Carbon replacement frequency or regeneration cycle time (specify units): _____
Maximum temperature of the carbon bed, after regeneration (including any cooling cycle): _____
☐ This is the only control equipment on this air contaminant source
If no, this control equipment is: ☐ Primary ☐ Secondary ☐ Parallel
List any other air contaminant sources that are also vented to this control equipment:
_____

☐ **Dry Scrubber**
Manufacturer: _____ Year installed: _____
What do you call this control equipment: _____
Pollutant(s) controlled: ☐ PE ☐ OC ☐ SO_2 ☐ NOx ☐ CO ☐ Other _____
Estimated capture efficiency (%): _____ Basis for efficiency: _____
Design control efficiency (%): _____ Basis for efficiency: _____
Reagent(s) used: Type: _____ Injection rate(s): _____
Operating pressure drop range (inches of water): Minimum: _____ Maximum: _____
☐ This is the only control equipment on this air contaminant source
If no, this control equipment is: ☐ Primary ☐ Secondary ☐ Parallel
List any other air contaminant sources that are also vented to this control equipment:
_____

☐ **Paint booth filter**
Type: ☐ Paper ☐ Fiberglass ☐ Water curtain ☐ Other _____
Design control efficiency (%): _____ Basis for efficiency: _____

☐ **Other**, describe _____
Manufacturer: _____ Year installed: _____
What do you call this control equipment: _____
Pollutant(s) controlled: ☐ PE ☐ OC ☐ SO_2 ☐ NOx ☐ CO ☐ Other
Estimated capture efficiency (%): _____ Basis for efficiency: _____

Design control efficiency (%): _____ Basis for efficiency: _____
☐ This is the only control equipment on this air contaminant source
If no, this control equipment is: ☐ Primary ☐ Secondary ☐ Parallel

Section II - Specific Air Contaminant Source Information

List any other air contaminant sources that are also vented to this control equipment:

6. Attach a Process or Activity Flow Diagram to this application for each air contaminant source included in the application. The diagram should indicate their relationships to one another. See the line by line PTI instructions for additional information.

7. Emissions egress point(s) information: PTIs which allow total emissions in excess of the thresholds listed below will be subject to an air quality modeling analysis. This analysis is to assure that the impact from the requested project will not exceed Ohio=s Acceptable Incremental Impacts for criteria pollutants and/or Maximum Allowable Ground Level Concentrations (MAGLC) for air toxics. Permit requests that would have unacceptable impacts can not be approved as proposed. See the line by line PTI instructions for additional information.

   Complete the tables below if the requested allowable annual emission rate for this PTI exceeds any of the following:

   - Particulate Matter (PM10): 10 tons per year
   - Sulfur Dioxide (SO2): 25 tons per year
   - Nitrogen Oxides (NOx): 25 tons per year
   - Carbon Monoxide (CO): 100 tons per year
   - Air Toxic: 1 ton per year. An air toxic is any air pollutant for which the American Council of Governmental Industrial Hygienists (ACGIH) has established a Threshold Limit Value (TLV).

   Complete Table 7-A below for each stack emissions egress point. An egress point is a point at which emissions from an air contaminant source are released into the ambient (outside) air. List each individual egress point on a separate line.

Table 7-A, Stack Egress Point Information

Company Name or ID for the Egress Point (examples: Stack A; Boiler Stack; etc.)	Type Code*	Stack Egress Point Shape and Dimensions (in)(examples: round 10 inch ID; rectangular 14 X 16 inches; etc.)	Stack Egress Point Height from the Ground (ft)	Stack Temp. at Max. Capacity (F)	Stack Flow Rate at Max. Capacity (ACFM)	Minimum Distance to the Property Line (ft)
COAL CRUSHER HOUSE	A	RECT. 2 FT X 3 FT	100	68	27,000	1,300

*Type codes for stack egress points:

A. vertical stack (unobstructed): There are no obstructions to upward flow in or on the stack such as a rain cap.
B. vertical stack (obstructed): There are obstructions to the upward flow, such as a rain cap, which prevents or inhibits the air flow in a vertical direction.
C. non-vertical stack: The stack directs the air flow in a direction which is not directly upward.

Complete Table 7-B below for each fugitive emissions egress point. List each individual egress point on a separate line. Refer to the description of the fugitive egress point type codes below the table for use in completing the type code column of the table. For air contaminant sources like roadways and storage piles, only the first 5 columns need to be completed. For an air contaminant source with multiple fugitive emissions egress points, include only the primary egress points.

Table 7-B, Fugitive Egress Point Information

Company ID for the Egress Point (examples; Garage Door B, Building C; Roof Monitor; etc.)	Type Code*	Egress Point Description (examples: garage door, 12 X 30 feet, west wall; outside gravel storage piles; etc.)	Fugitive Egress Point Height from the Ground (ft)	Minimum Distance to the Property Line (ft)	Exit Gas Temp. (F)

Section II - Specific Air Contaminant Source Information

*Type codes for fugitive egress point:

D. door or window
E. other opening in the building without a duct
F. no stack and no building enclosing the air contaminant source (e.g., roadways)

Complete Table 7-C below for each Stack Egress Point identified in Table 7-A above. In each case, use the dimensions of the largest nearby building, building segment or structure. List each individual egress point on a separate line. Use the same Company Name or ID for the Egress Point in Table 7-C that was used in Table 7-A. See the line by line PTI instructions for additional information.

Table 7-C, Egress Point Additional Information (Add rows as necessary)

Company ID or Name for the Egress Point	Building Height (ft)	Building Width (ft)	Building Length (ft)
COAL CRUSHER HOUSE	200	100	150

8. Request for Federally Enforceable Limits

As part of this permit application, do you wish to propose voluntary restrictions to limit emissions in order to avoid specific requirements listed below, (i.e., are you requesting federally enforceable limits to obtain synthetic minor status)?

☐ yes
☒ no
☐ not sure - please contact me if this affects me

If yes, why are you requesting federally enforceable limits? Check all that apply.

a. ☐ to avoid being a major source (see OAC rule 3745-77-01)
b. ☐ to avoid being a major MACT source (see OAC rule 3745-31-01)
c. ☐ to avoid being a major modification (see OAC rule 3745-31-01)
d. ☐ to avoid being a major stationary source (see OAC rule 3745-31-01)
e. ☐ to avoid an air dispersion modeling requirement (see Engineering Guide # 69)
f. ☐ to avoid another requirement. Describe: _____

If you checked a., b. or d., please attach a facility-wide potential to emit (PTE) analysis (for each pollutant) and synthetic minor strategy to this application. (See line by line instructions for definition of PTE.) If you checked c., please attach a net emission change analysis to this application.

9. If this air contaminant source utilizes any continuous emissions monitoring equipment for indicating or demonstrating compliance, complete the following table. This does not include continuous parametric monitoring systems.

Company ID for Egress Point	Type of Monitor	Applicable performance specification (40 CFR 60, Appendix B)	Pollutant(s) Monitored

10. Do you wish to permit this air contaminant source as a portable source, allowing relocation within the state in accordance with OAC rule 3745-31-03 or OAC rule 3745-31-05?

Section II - Specific Air Contaminant Source Information

☐ yes - Note: notification requirements in rules cited above must be followed.
☒ no

11. The appropriate Emissions Activity Category (EAC) form(s) must be completed and attached for each air contaminant source. At least one complete EAC form must be submitted for each air contaminant source for the application to be considered complete. Refer to the list attached to the PTI instructions.

Section II - Specific Air Contaminant Source Information

NOTE: One copy of this section should be filled out for each air contaminant source covered by this PTI application. See the line by line PTI instructions for additional information.

1. Company identification (name for air contaminant source for which you are applying): BIOMASS CRUSHER HOUSE

2. List all equipment that are part of this air contaminant source: BIOMASS CRUSHER HOUSE

3. Air Contaminant Source Installation or Modification Schedule (must be completed regardless of date of installation or modification):

   When did/will you begin to install or modify the air contaminant source? (month/year) SECOND QUARTER 2008

   When did/will you begin to operate the air contaminant source? (month/year) THIRD QUARTER 2011 **OR** after issuance of PTI _____

4. Emissions Information: The following table requests information needed to determine the applicable requirements and the compliance status of this air contaminant source with those requirements. Suggestions for how to estimate emissions may be found in the instructions to the Emissions Activity Category (EAC) forms required with this application. If you need further assistance, contact your Ohio EPA permit representative.

   - If total potential emissions of HAPs or any Air Toxic is greater than 1 ton/yr, fill in the table for that (those) pollutant(s). For all other pollutants, if "Emissions before controls (max), lb/hr" multiplied by 24 hours/day is greater than 10 lb/day, fill in the table for that pollutant.
   - If you have no add-on control equipment, "Emissions before controls= will be the same as "Actual emissions"
   - Annual emissions should be based on operating 8760 hr/yr unless you are requesting operating restrictions to limit emissions in line # 8 or have described inherent limitations below.
   - If you use units other than lb/hr or ton/yr, specify the units used (e.g., gr/dscf, lb/ton charged, lb/MMBtu, ton/12-months).
   - Requested Allowable (ton/yr) is often equivalent to Potential to Emit (PTE) as defined in OAC rule 3745-31-01 and OAC rule 3745-77-01.

Pollutant	Emissions before controls (max) (lb/hr)	Actual emissions (lb/hr)	Actual emissions (ton/year)	Requested Allowable (lb/hr)	Requested Allowable (ton/year)
Particulate emissions (PE) (formerly particulate matter, PM)	1,140	1.2	5.1	1.2	5.1
PM_{10} (PM < 10 microns in diameter)	1,140	1.2	5.1	1.2	5.1
Sulfur dioxide (SO_2)	0	0	0	0	0
Nitrogen oxides (NO_x)	0	0	0	0	0
Carbon monoxide (CO)	0	0	0	0	0
Organic compounds (OC)	0	0	0	0	0
Volatile organic compounds (VOC)	0	0	0	0	0
Total HAPs	0	0	0	0	0
Highest single HAP:	0	0	0	0	0
Air Toxics (see instructions):	0	0	0	0	0

Provide your calculations as an attachment and explain how all process variables and emission factors were selected. Note the emissions factor(s) employed and document the origin. Example: AP-42, Table 4.4-3 (8/97); stack test, Method 5, 4/96; mass balance based on MSDS; etc.

Section II - Specific Air Contaminant Source Information

5. **Does this air contaminant source employ emissions control equipment?**

☒ **Yes** - fill out the applicable information below.

☐ **No** - proceed to item # 6.

Note: Pollutant abbreviations used below: Particulates = PE; Organic compounds = OC; Sulfur dioxide = SO_2; Nitrogen oxides = NOx; Carbon monoxide = CO

☐ **Cyclone/Multiclone**
Manufacturer: _____ Year installed: _____
What do you call this control equipment: _____
Pollutant(s) controlled: ☐ PE ☐ OC ☐ SO_2 ☐ NOx ☐ CO ☐ Other _____
Estimated capture efficiency (%): _____ Basis for efficiency: _____
Design control efficiency (%): _____ Basis for efficiency: _____
Type: ☐ Cyclone ☐ Multiclone ☐ Rotoclone ☐ Other _____
☐ This is the only control equipment on this air contaminant source
If no, this control equipment is: ☐ Primary ☐ Secondary ☐ Parallel
List any other air contaminant sources that are also vented to this control equipment:
_____

☒ **Fabric Filter/Baghouse**
Manufacturer: TO BE DETERMINED Year installed: NEW FACILITY
What do you call this control equipment: FEEDSTOCK PROCESSING BAGHOUSE 10
Pollutant(s) controlled: ☒ PE ☐ OC ☐ SO_2 ☒ NOx ☐ CO ☐ Other _____
Estimated capture efficiency (%):100 Basis for efficiency: ENGINEERING DESIGN
Design control efficiency (%):99.9 Basis for efficiency: LITERATURE
Operating pressure drop range (inches of water): Minimum: 3 Maximum: 6
Pressure type: ☒ Negative pressure ☐ Positive pressure
Fabric cleaning mechanism: ☐ Reverse air ☒ Pulse jet ☐ Shaker ☐ Other _____
☐ Lime injection or fabric coating agent used: Type: _____ Feed rate: _____
☒ This is the only control equipment on this air contaminant source
If no, this control equipment is: ☐ Primary ☐ Secondary ☐ Parallel
List any other air contaminant sources that are also vented to this control equipment:
_____

☐ **Wet Scrubber**
Manufacturer: _____ Year installed: _____
What do you call this control equipment: _____
Pollutant(s) controlled: ☐ PE ☐ OC ☐ SO_2 ☐ NOx ☐ CO ☐ Other _____
Estimated capture efficiency (%): _____ Basis for efficiency: _____
Design control efficiency (%): _____ Basis for efficiency: _____
Type: ☐ Spray chamber ☐ Packed bed ☐ Impingement ☐ Venturi ☐ Other _____
Operating pressure drop range (inches of water): Minimum: _____ Maximum: _____
pH range for scrubbing liquid: Minimum: _____ Maximum: _____
Scrubbing liquid flow rate (gal/min): _____
Is scrubber liquid recirculated? ☐ Yes ☐ No
Water supply pressure (psig): _____ NOTE: This item for spray chambers only.
☐ This is the only control equipment on this air contaminant source
If no, this control equipment is: ☐ Primary ☐ Secondary ☐ Parallel
List any other air contaminant sources that are also vented to this control equipment:
_____

☐ **Electrostatic Precipitator**
Manufacturer: _____ Year installed: _____
What do you call this control equipment: _____
Pollutant(s) controlled: ☐ PE ☐ OC ☐ SO_2 ☐ NOx ☐ CO ☐ Other _____
Estimated capture efficiency (%): _____ Basis for efficiency: _____
Design control efficiency (%): _____ Basis for efficiency: _____

Section II - Specific Air Contaminant Source Information

Type: ☐ Plate-wire ☐ Flat-plate ☐ Tubular ☐ Wet ☐ Other _____
Number of operating fields: _____

☐ This is the only control equipment on this air contaminant source
If no, this control equipment is: ☐ Primary ☐ Secondary ☐ Parallel
List any other air contaminant sources that are also vented to this control equipment:
_____

☐ **Concentrator**
Manufacturer: _____ Year installed: _____
What do you call this control equipment: _____
Pollutant(s) controlled: ☐ PE ☐ OC ☐ SO_2 ☐ NOx ☐ CO ☐ Other _____
Estimated capture efficiency (%): _____ Basis for efficiency: _____
Design regeneration cycle time (minutes): _____
Minimum desorption air stream temperature (°F): _____
Rotational rate (revolutions/hour): _____
☐ This is the only control equipment on this air contaminant source
If no, this control equipment is: ☐ Primary ☐ Secondary ☐ Parallel
List any other air contaminant sources that are also vented to this control equipment:
_____

☐ **Catalytic Incinerator**
Manufacturer: _____ Year installed: _____
What do you call this control equipment: _____
Pollutant(s) controlled: ☐ PE ☐ OC ☐ SO_2 ☐ NOx ☐ CO ☐ Other _____
Estimated capture efficiency (%): _____ Basis for efficiency: _____
Design control efficiency (%): _____ Basis for efficiency: _____
Minimum inlet gas temperature (°F): _____
Combustion chamber residence time (seconds): _____
Minimum temperature difference (°F) across catalyst during air contaminant source operation: _____
☐ This is the only control equipment on this air contaminant source
If no, this control equipment is: ☐ Primary ☐ Secondary ☐ Parallel
List any other air contaminant sources that are also vented to this control equipment:
_____

☐ **Thermal Incinerator/Thermal Oxidizer**
Manufacturer: _____ Year installed: _____
What do you call this control equipment: _____
Pollutant(s) controlled: ☐ PE ☐ OC ☐ SO_2 ☐ NOx ☐ CO ☐ Other _____
Estimated capture efficiency (%): _____ Basis for efficiency: _____
Design control efficiency (%): _____ Basis for efficiency: _____
Minimum operating temperature (°F) and location: _____ (See line by line instructions.)
Combustion chamber residence time (seconds): _____
☐ This is the only control equipment on this air contaminant source
If no, this control equipment is: ☐ Primary ☐ Secondary ☐ Parallel
List any other air contaminant sources that are also vented to this control equipment:
_____

☐ **Flare**
Manufacturer: _____ Year installed: _____
What do you call this control equipment: _____
Pollutant(s) controlled: ☐ PE ☐ OC ☐ SO_2 ☐ NOx ☐ CO ☐ Other _____
Estimated capture efficiency (%): _____ Basis for efficiency: _____
Design control efficiency (%): _____ Basis for efficiency: _____
Type: ☐ Enclosed ☐ Elevated (open)
Ignition device: ☐ Electric arc ☐ Pilot flame
Flame presence sensor: ☐ Yes ☐ No
☐ This is the only control equipment on this air contaminant source
If no, this control equipment is: ☐ Primary ☐ Secondary ☐ Parallel
List any other air contaminant sources that are also vented to this control equipment:

Section II - Specific Air Contaminant Source Information

☐ **Condenser**
Manufacturer: _____ Year installed: _____
What do you call this control equipment: _____
Pollutant(s) controlled: ☐ PE ☐ OC ☐ SO_2 ☐ NOx ☐ CO ☐ Other _____
Estimated capture efficiency (%): _____ Basis for efficiency: _____
Design control efficiency (%): _____ Basis for efficiency: _____

Type: ☐ Indirect contact ☐ Direct contact
Maximum exhaust gas temperature (°F) during air contaminant source operation: _____
Coolant type: _____
Design coolant temperature (°F): Minimum _____ Maximum _____
Design coolant flow rate (gpm): _____
☐ This is the only control equipment on this air contaminant source
If no, this control equipment is: ☐ Primary ☐ Secondary ☐ Parallel
List any other air contaminant sources that are also vented to this control equipment:
_____

☐ **Carbon Absorber**
Manufacturer: _____ Year installed: _____
What do you call this control equipment: _____
Pollutant(s) controlled: ☐ PE ☐ OC ☐ SO_2 ☐ NOx ☐ CO ☐ Other _____
Estimated capture efficiency (%): _____ Basis for efficiency: _____
Design control efficiency (%): _____ Basis for efficiency: _____
Type: ☐ On-site regenerative ☐ Disposable
Maximum design outlet organic compound concentration (ppmv): _____
Carbon replacement frequency or regeneration cycle time (specify units): _____
Maximum temperature of the carbon bed, after regeneration (including any cooling cycle): _____
☐ This is the only control equipment on this air contaminant source
If no, this control equipment is: ☐ Primary ☐ Secondary ☐ Parallel
List any other air contaminant sources that are also vented to this control equipment:
_____

☐ **Dry Scrubber**
Manufacturer: _____ Year installed: _____
What do you call this control equipment: _____
Pollutant(s) controlled: ☐ PE ☐ OC ☐ SO_2 ☐ NOx ☐ CO ☐ Other _____
Estimated capture efficiency (%): _____ Basis for efficiency: _____
Design control efficiency (%): _____ Basis for efficiency: _____
Reagent(s) used: Type: _____ Injection rate(s): _____
Operating pressure drop range (inches of water): Minimum: _____ Maximum: _____
☐ This is the only control equipment on this air contaminant source
If no, this control equipment is: ☐ Primary ☐ Secondary ☐ Parallel
List any other air contaminant sources that are also vented to this control equipment:
_____

☐ **Paint booth filter**
Type: ☐ Paper ☐ Fiberglass ☐ Water curtain ☐ Other _____
Design control efficiency (%): _____ Basis for efficiency: _____

☐ **Other**, describe _____
Manufacturer: _____ Year installed: _____
What do you call this control equipment: _____
Pollutant(s) controlled: ☐ PE ☐ OC ☐ SO_2 ☐ NOx ☐ CO ☐ Other
Estimated capture efficiency (%): _____ Basis for efficiency: _____

Design control efficiency (%): _____ Basis for efficiency: _____
☐ This is the only control equipment on this air contaminant source
If no, this control equipment is: ☐ Primary ☐ Secondary ☐ Parallel

Section II - Specific Air Contaminant Source Information

List any other air contaminant sources that are also vented to this control equipment:

6. Attach a Process or Activity Flow Diagram to this application for each air contaminant source included in the application. The diagram should indicate their relationships to one another. See the line by line PTI instructions for additional information.

7. Emissions egress point(s) information: PTIs which allow total emissions in excess of the thresholds listed below will be subject to an air quality modeling analysis. This analysis is to assure that the impact from the requested project will not exceed Ohio=s Acceptable Incremental Impacts for criteria pollutants and/or Maximum Allowable Ground Level Concentrations (MAGLC) for air toxics. Permit requests that would have unacceptable impacts can not be approved as proposed. See the line by line PTI instructions for additional information.

   Complete the tables below if the requested allowable annual emission rate for this PTI exceeds any of the following:

   - Particulate Matter (PM10): 10 tons per year
   - Sulfur Dioxide (SO2): 25 tons per year
   - Nitrogen Oxides (NOx): 25 tons per year
   - Carbon Monoxide (CO): 100 tons per year
   - Air Toxic: 1 ton per year. An air toxic is any air pollutant for which the American Council of Governmental Industrial Hygienists (ACGIH) has established a Threshold Limit Value (TLV).

   Complete Table 7-A below for each stack emissions egress point. An egress point is a point at which emissions from an air contaminant source are released into the ambient (outside) air. List each individual egress point on a separate line.

Table 7-A, Stack Egress Point Information

Company Name or ID for the Egress Point (examples: Stack A; Boiler Stack; etc.)	Type Code*	Stack Egress Point Shape and Dimensions (in)(examples: round 10 inch ID; rectangular 14 X 16 inches; etc.)	Stack Egress Point Height from the Ground (ft)	Stack Temp. at Max. Capacity (F)	Stack Flow Rate at Max. Capacity (ACFM)	Minimum Distance to the Property Line (ft)
BIOMASS CRUSHER HOUSE	A	RECT. 2 FT X 3 FT	100	68	27,000	1,300

*Type codes for stack egress points:

A. vertical stack (unobstructed): There are no obstructions to upward flow in or on the stack such as a rain cap.
B. vertical stack (obstructed): There are obstructions to the upward flow, such as a rain cap, which prevents or inhibits the air flow in a vertical direction.
C. non-vertical stack: The stack directs the air flow in a direction which is not directly upward.

Complete Table 7-B below for each fugitive emissions egress point. List each individual egress point on a separate line. Refer to the description of the fugitive egress point type codes below the table for use in completing the type code column of the table. For air contaminant sources like roadways and storage piles, only the first 5 columns need to be completed. For an air contaminant source with multiple fugitive emissions egress points, include only the primary egress points.

Table 7-B, Fugitive Egress Point Information

Company ID for the Egress Point (examples; Garage Door B, Building C; Roof Monitor; etc.)	Type Code*	Egress Point Description (examples: garage door, 12 X 30 feet, west wall; outside gravel storage piles; etc.)	Fugitive Egress Point Height from the Ground (ft)	Minimum Distance to the Property Line (ft)	Exit Gas Temp. (F)

Section II - Specific Air Contaminant Source Information

*Type codes for fugitive egress point:

D. door or window
E. other opening in the building without a duct
F. no stack and no building enclosing the air contaminant source (e.g., roadways)

Complete Table 7-C below for each Stack Egress Point identified in Table 7-A above. In each case, use the dimensions of the largest nearby building, building segment or structure. List each individual egress point on a separate line. Use the same Company Name or ID for the Egress Point in Table 7-C that was used in Table 7-A. See the line by line PTI instructions for additional information.

Table 7-C, Egress Point Additional Information (Add rows as necessary)

Company ID or Name for the Egress Point	Building Height (ft)	Building Width (ft)	Building Length (ft)
BIOMASS CRUSHER HOUSE	200	100	150

8. Request for Federally Enforceable Limits

As part of this permit application, do you wish to propose voluntary restrictions to limit emissions in order to avoid specific requirements listed below, (i.e., are you requesting federally enforceable limits to obtain synthetic minor status)?

☐ yes
☒ no
☐ not sure - please contact me if this affects me

If yes, why are you requesting federally enforceable limits? Check all that apply.

a. ☐ to avoid being a major source (see OAC rule 3745-77-01)
b. ☐ to avoid being a major MACT source (see OAC rule 3745-31-01)
c. ☐ to avoid being a major modification (see OAC rule 3745-31-01)
d. ☐ to avoid being a major stationary source (see OAC rule 3745-31-01)
e. ☐ to avoid an air dispersion modeling requirement (see Engineering Guide # 69)
f. ☐ to avoid another requirement. Describe: _____

If you checked a., b. or d., please attach a facility-wide potential to emit (PTE) analysis (for each pollutant) and synthetic minor strategy to this application. (See line by line instructions for definition of PTE.) If you checked c., please attach a net emission change analysis to this application.

9. If this air contaminant source utilizes any continuous emissions monitoring equipment for indicating or demonstrating compliance, complete the following table. This does not include continuous parametric monitoring systems.

Company ID for Egress Point	Type of Monitor	Applicable performance specification (40 CFR 60, Appendix B)	Pollutant(s) Monitored

10. Do you wish to permit this air contaminant source as a portable source, allowing relocation within the state in accordance with OAC rule 3745-31-03 or OAC rule 3745-31-05?

Section II - Specific Air Contaminant Source Information

☐ yes - Note: notification requirements in rules cited above must be followed.
☒ no

11. The appropriate Emissions Activity Category (EAC) form(s) must be completed and attached for each air contaminant source. At least one complete EAC form must be submitted for each air contaminant source for the application to be considered complete. Refer to the list attached to the PTI instructions.

Section II - Specific Air Contaminant Source Information

NOTE: One copy of this section should be filled out for each air contaminant source covered by this PTI application. See the line by line PTI instructions for additional information.

1. Company identification (name for air contaminant source for which you are applying): COAL SILOS 1 & 2

2. List all equipment that are part of this air contaminant source: COAL SILOS 1 & 2

3. Air Contaminant Source Installation or Modification Schedule (must be completed regardless of date of installation or modification):

   When did/will you begin to install or modify the air contaminant source? (month/year) SECOND QUARTER 2008

   When did/will you begin to operate the air contaminant source? (month/year) THIRD QUARTER 2011 **OR** after issuance of PTI _____

4. Emissions Information: The following table requests information needed to determine the applicable requirements and the compliance status of this air contaminant source with those requirements. Suggestions for how to estimate emissions may be found in the instructions to the Emissions Activity Category (EAC) forms required with this application. If you need further assistance, contact your Ohio EPA permit representative.

   - If total potential emissions of HAPs or any Air Toxic is greater than 1 ton/yr, fill in the table for that (those) pollutant(s). For all other pollutants, if "Emissions before controls (max), lb/hr" multiplied by 24 hours/day is greater than 10 lb/day, fill in the table for that pollutant.
   - If you have no add-on control equipment, "Emissions before controls= will be the same as "Actual emissions"
   - Annual emissions should be based on operating 8760 hr/yr unless you are requesting operating restrictions to limit emissions in line # 8 or have described inherent limitations below.
   - If you use units other than lb/hr or ton/yr, specify the units used (e.g., gr/dscf, lb/ton charged, lb/MMBtu, ton/12-months).
   - Requested Allowable (ton/yr) is often equivalent to Potential to Emit (PTE) as defined in OAC rule 3745-31-01 and OAC rule 3745-77-01.

Pollutant	Emissions before controls (max) (lb/hr)	Actual emissions (lb/hr)	Actual emissions (ton/year)	Requested Allowable (lb/hr)	Requested Allowable (ton/year)
Particulate emissions (PE) (formerly particulate matter, PM)	400	0.7	3.0	0.7	3.0
PM_{10} (PM < 10 microns in diameter)	400	0.7	3.0	0.7	3.0
Sulfur dioxide (SO_2)	0	0	0	0	0
Nitrogen oxides (NO_x)	0	0	0	0	0
Carbon monoxide (CO)	0	0	0	0	0
Organic compounds (OC)	0	0	0	0	0
Volatile organic compounds (VOC)	0	0	0	0	0
Total HAPs	0	0	0	0	0
Highest single HAP:	0	0	0	0	0
Air Toxics (see instructions):	0	0	0	0	0

Provide your calculations as an attachment and explain how all process variables and emission factors were selected. Note the emissions factor(s) employed and document the origin. Example: AP-42, Table 4.4-3 (8/97); stack test, Method 5, 4/96; mass balance based on MSDS; etc.

Section II - Specific Air Contaminant Source Information

5. **Does this air contaminant source employ emissions control equipment?**

☒ **Yes** - fill out the applicable information below.

☐ **No** - proceed to item # 6.

Note: Pollutant abbreviations used below: Particulates = PE; Organic compounds = OC; Sulfur dioxide = SO_2; Nitrogen oxides = NOx; Carbon monoxide = CO

☐ **Cyclone/Multiclone**
Manufacturer: _____ Year installed: _____
What do you call this control equipment: _____
Pollutant(s) controlled: ☐ PE ☐ OC ☐ SO_2 ☐ NOx ☐ CO ☐ Other _____
Estimated capture efficiency (%): _____ Basis for efficiency: _____
Design control efficiency (%): _____ Basis for efficiency: _____
Type: ☐ Cyclone ☐ Multiclone ☐ Rotoclone ☐ Other _____
☐ This is the only control equipment on this air contaminant source
If no, this control equipment is: ☐ Primary ☐ Secondary ☐ Parallel
List any other air contaminant sources that are also vented to this control equipment:
_____

☒ **Fabric Filter/Baghouse**
Manufacturer: TO BE DETERMINED Year installed: NEW FACILITY
What do you call this control equipment: FEEDSTOCK PROCESSING BAGHOUSE 7
Pollutant(s) controlled: ☒ PE ☐ OC ☐ SO_2 ☐ NOx ☐ CO ☐ Other _____
Estimated capture efficiency (%):100 Basis for efficiency: ENGINEERING DESIGN
Design control efficiency (%):99.9 Basis for efficiency: LITERATURE
Operating pressure drop range (inches of water): Minimum: 3 Maximum: 6
Pressure type: ☒ Negative pressure ☐ Positive pressure
Fabric cleaning mechanism: ☐ Reverse air ☒ Pulse jet ☐ Shaker ☐ Other _____
☐ Lime injection or fabric coating agent used: Type: _____ Feed rate: _____
☒ This is the only control equipment on this air contaminant source
If no, this control equipment is: ☐ Primary ☐ Secondary ☐ Parallel
List any other air contaminant sources that are also vented to this control equipment:
_____

☐ **Wet Scrubber**
Manufacturer: _____ Year installed: _____
What do you call this control equipment: _____
Pollutant(s) controlled: ☐ PE ☐ OC ☐ SO_2 ☐ NOx ☐ CO ☐ Other _____
Estimated capture efficiency (%): _____ Basis for efficiency: _____
Design control efficiency (%): _____ Basis for efficiency: _____
Type: ☐ Spray chamber ☐ Packed bed ☐ Impingement ☐ Venturi ☐ Other _____
Operating pressure drop range (inches of water): Minimum: _____ Maximum: _____
pH range for scrubbing liquid: Minimum: _____ Maximum: _____
Scrubbing liquid flow rate (gal/min): _____
Is scrubber liquid recirculated? ☐ Yes ☐ No
Water supply pressure (psig): _____ NOTE: This item for spray chambers only.
☐ This is the only control equipment on this air contaminant source
If no, this control equipment is: ☐ Primary ☐ Secondary ☐ Parallel
List any other air contaminant sources that are also vented to this control equipment:
_____

☐ **Electrostatic Precipitator**
Manufacturer: _____ Year installed: _____
What do you call this control equipment: _____
Pollutant(s) controlled: ☐ PE ☐ OC ☐ SO_2 ☐ NOx ☐ CO ☐ Other _____
Estimated capture efficiency (%): _____ Basis for efficiency: _____
Design control efficiency (%): _____ Basis for efficiency: _____

Section II - Specific Air Contaminant Source Information

Type: ☐ Plate-wire ☐ Flat-plate ☐ Tubular ☐ Wet ☐ Other _____
Number of operating fields: _____

☐ This is the only control equipment on this air contaminant source
If no, this control equipment is: ☐ Primary ☐ Secondary ☐ Parallel
List any other air contaminant sources that are also vented to this control equipment:
_____

☐ **Concentrator**
Manufacturer: _____ Year installed: _____
What do you call this control equipment: _____
Pollutant(s) controlled: ☐ PE ☐ OC ☐ SO_2 ☐ NOx ☐ CO ☐ Other _____
Estimated capture efficiency (%):_____ Basis for efficiency: _____
Design regeneration cycle time (minutes): _____
Minimum desorption air stream temperature (°F): _____
Rotational rate (revolutions/hour): _____
☐ This is the only control equipment on this air contaminant source
If no, this control equipment is: ☐ Primary ☐ Secondary ☐ Parallel
List any other air contaminant sources that are also vented to this control equipment:
_____

☐ **Catalytic Incinerator**
Manufacturer: _____ Year installed: _____
What do you call this control equipment: _____
Pollutant(s) controlled: ☐ PE ☐ OC ☐ SO_2 ☐ NOx ☐ CO ☐ Other _____
Estimated capture efficiency (%):_____ Basis for efficiency: _____
Design control efficiency (%):_____ Basis for efficiency: _____
Minimum inlet gas temperature (°F): _____
Combustion chamber residence time (seconds): _____
Minimum temperature difference (°F) across catalyst during air contaminant source operation: _____
☐ This is the only control equipment on this air contaminant source
If no, this control equipment is: ☐ Primary ☐ Secondary ☐ Parallel
List any other air contaminant sources that are also vented to this control equipment:
_____

☐ **Thermal Incinerator/Thermal Oxidizer**
Manufacturer: _____ Year installed: _____
What do you call this control equipment: _____
Pollutant(s) controlled: ☐ PE ☐ OC ☐ SO_2 ☐ NOx ☐ CO ☐ Other _____
Estimated capture efficiency (%):_____ Basis for efficiency: _____
Design control efficiency (%):_____ Basis for efficiency: _____
Minimum operating temperature (°F) and location: _____ (See line by line instructions.)
Combustion chamber residence time (seconds): _____
☐ This is the only control equipment on this air contaminant source
If no, this control equipment is: ☐ Primary ☐ Secondary ☐ Parallel
List any other air contaminant sources that are also vented to this control equipment:
_____

☐ **Flare**
Manufacturer: _____ Year installed: _____
What do you call this control equipment: _____
Pollutant(s) controlled: ☐ PE ☐ OC ☐ SO_2 ☐ NOx ☐ CO ☐ Other _____
Estimated capture efficiency (%):_____ Basis for efficiency: _____
Design control efficiency (%):_____ Basis for efficiency: _____
Type: ☐ Enclosed ☐ Elevated (open)
Ignition device: ☐ Electric arc ☐ Pilot flame
Flame presence sensor: ☐ Yes ☐ No
☐ This is the only control equipment on this air contaminant source
If no, this control equipment is: ☐ Primary ☐ Secondary ☐ Parallel
List any other air contaminant sources that are also vented to this control equipment:

Section II - Specific Air Contaminant Source Information

☐ **Condenser**
Manufacturer: _____ Year installed: _____
What do you call this control equipment: _____
Pollutant(s) controlled: ☐ PE ☐ OC ☐ SO_2 ☐ NOx ☐ CO ☐ Other _____
Estimated capture efficiency (%): _____ Basis for efficiency: _____
Design control efficiency (%): _____ Basis for efficiency: _____

Type: ☐ Indirect contact ☐ Direct contact
Maximum exhaust gas temperature (°F) during air contaminant source operation: _____
Coolant type: _____
Design coolant temperature (°F): Minimum _____ Maximum _____
Design coolant flow rate (gpm): _____
☐ This is the only control equipment on this air contaminant source
If no, this control equipment is: ☐ Primary ☐ Secondary ☐ Parallel
List any other air contaminant sources that are also vented to this control equipment:
_____

☐ **Carbon Absorber**
Manufacturer: _____ Year installed: _____
What do you call this control equipment: _____
Pollutant(s) controlled: ☐ PE ☐ OC ☐ SO_2 ☐ NOx ☐ CO ☐ Other _____
Estimated capture efficiency (%): _____ Basis for efficiency: _____
Design control efficiency (%): _____ Basis for efficiency: _____
Type: ☐ On-site regenerative ☐ Disposable
Maximum design outlet organic compound concentration (ppmv): _____
Carbon replacement frequency or regeneration cycle time (specify units): _____
Maximum temperature of the carbon bed, after regeneration (including any cooling cycle): _____
☐ This is the only control equipment on this air contaminant source
If no, this control equipment is: ☐ Primary ☐ Secondary ☐ Parallel
List any other air contaminant sources that are also vented to this control equipment:
_____

☐ **Dry Scrubber**
Manufacturer: _____ Year installed: _____
What do you call this control equipment: _____
Pollutant(s) controlled: ☐ PE ☐ OC ☐ SO_2 ☐ NOx ☐ CO ☐ Other _____
Estimated capture efficiency (%): _____ Basis for efficiency: _____
Design control efficiency (%): _____ Basis for efficiency: _____
Reagent(s) used: Type: _____ Injection rate(s): _____
Operating pressure drop range (inches of water): Minimum: _____ Maximum: _____
☐ This is the only control equipment on this air contaminant source
If no, this control equipment is: ☐ Primary ☐ Secondary ☐ Parallel
List any other air contaminant sources that are also vented to this control equipment:
_____

☐ **Paint booth filter**
Type: ☐ Paper ☐ Fiberglass ☐ Water curtain ☐ Other _____
Design control efficiency (%): _____ Basis for efficiency: _____

☐ **Other**, describe _____
Manufacturer: _____ Year installed: _____
What do you call this control equipment: _____
Pollutant(s) controlled: ☐ PE ☐ OC ☐ SO_2 ☐ NOx ☐ CO ☐ Other
Estimated capture efficiency (%): _____ Basis for efficiency: _____

Design control efficiency (%): _____ Basis for efficiency: _____
☐ This is the only control equipment on this air contaminant source
If no, this control equipment is: ☐ Primary ☐ Secondary ☐ Parallel

Section II - Specific Air Contaminant Source Information

List any other air contaminant sources that are also vented to this control equipment:

6. Attach a Process or Activity Flow Diagram to this application for each air contaminant source included in the application. The diagram should indicate their relationships to one another. See the line by line PTI instructions for additional information.

7. Emissions egress point(s) information: PTIs which allow total emissions in excess of the thresholds listed below will be subject to an air quality modeling analysis. This analysis is to assure that the impact from the requested project will not exceed Ohio=s Acceptable Incremental Impacts for criteria pollutants and/or Maximum Allowable Ground Level Concentrations (MAGLC) for air toxics. Permit requests that would have unacceptable impacts can not be approved as proposed. See the line by line PTI instructions for additional information.

   Complete the tables below if the requested allowable annual emission rate for this PTI exceeds any of the following:

   - Particulate Matter (PM10): 10 tons per year
   - Sulfur Dioxide (SO2): 25 tons per year
   - Nitrogen Oxides (NOx): 25 tons per year
   - Carbon Monoxide (CO): 100 tons per year
   - Air Toxic: 1 ton per year. An air toxic is any air pollutant for which the American Council of Governmental Industrial Hygienists (ACGIH) has established a Threshold Limit Value (TLV).

   Complete Table 7-A below for each stack emissions egress point. An egress point is a point at which emissions from an air contaminant source are released into the ambient (outside) air. List each individual egress point on a separate line.

Table 7-A, Stack Egress Point Information

Company Name or ID for the Egress Point (examples: Stack A; Boiler Stack; etc.)	Type Code*	Stack Egress Point Shape and Dimensions (in)(examples: round 10 inch ID; rectangular 14 X 16 inches; etc.)	Stack Egress Point Height from the Ground (ft)	Stack Temp. at Max. Capacity (F)	Stack Flow Rate at Max. Capacity (ACFM)	Minimum Distance to the Property Line (ft)
COAL SILOS 1 & 2	A	RECT. 2 FT X 3 FT	250	68	16,000	1,000

*Type codes for stack egress points:

A. vertical stack (unobstructed): There are no obstructions to upward flow in or on the stack such as a rain cap.
B. vertical stack (obstructed): There are obstructions to the upward flow, such as a rain cap, which prevents or inhibits the air flow in a vertical direction.
C. non-vertical stack: The stack directs the air flow in a direction which is not directly upward.

Complete Table 7-B below for each fugitive emissions egress point. List each individual egress point on a separate line. Refer to the description of the fugitive egress point type codes below the table for use in completing the type code column of the table. For air contaminant sources like roadways and storage piles, only the first 5 columns need to be completed. For an air contaminant source with multiple fugitive emissions egress points, include only the primary egress points.

Table 7-B, Fugitive Egress Point Information

Company ID for the Egress Point (examples; Garage Door B, Building C; Roof Monitor; etc.)	Type Code*	Egress Point Description (examples: garage door, 12 X 30 feet, west wall; outside gravel storage piles; etc.)	Fugitive Egress Point Height from the Ground (ft)	Minimum Distance to the Property Line (ft)	Exit Gas Temp. (F)

Section II - Specific Air Contaminant Source Information

*Type codes for fugitive egress point:

D. door or window
E. other opening in the building without a duct
F. no stack and no building enclosing the air contaminant source (e.g., roadways)

Complete Table 7-C below for each Stack Egress Point identified in Table 7-A above. In each case, use the dimensions of the largest nearby building, building segment or structure. List each individual egress point on a separate line. Use the same Company Name or ID for the Egress Point in Table 7-C that was used in Table 7-A. See the line by line PTI instructions for additional information.

Table 7-C, Egress Point Additional Information (Add rows as necessary)			
Company ID or Name for the Egress Point	**Building Height (ft)**	**Building Width (ft)**	**Building Length (ft)**
COAL SILOS 1 & 2	200	100	150

8. Request for Federally Enforceable Limits

As part of this permit application, do you wish to propose voluntary restrictions to limit emissions in order to avoid specific requirements listed below, (i.e., are you requesting federally enforceable limits to obtain synthetic minor status)?

☐ yes
☒ no
☐ not sure - please contact me if this affects me

If yes, why are you requesting federally enforceable limits? Check all that apply.

a. ☐ to avoid being a major source (see OAC rule 3745-77-01)
b. ☐ to avoid being a major MACT source (see OAC rule 3745-31-01)
c. ☐ to avoid being a major modification (see OAC rule 3745-31-01)
d. ☐ to avoid being a major stationary source (see OAC rule 3745-31-01)
e. ☐ to avoid an air dispersion modeling requirement (see Engineering Guide # 69)
f. ☐ to avoid another requirement. Describe: _____

If you checked a., b. or d., please attach a facility-wide potential to emit (PTE) analysis (for each pollutant) and synthetic minor strategy to this application. (See line by line instructions for definition of PTE.) If you checked c., please attach a net emission change analysis to this application.

9. If this air contaminant source utilizes any continuous emissions monitoring equipment for indicating or demonstrating compliance, complete the following table. This does not include continuous parametric monitoring systems.

Company ID for Egress Point	Type of Monitor	Applicable performance specification (40 CFR 60, Appendix B)	Pollutant(s) Monitored

10. Do you wish to permit this air contaminant source as a portable source, allowing relocation within the state in accordance with OAC rule 3745-31-03 or OAC rule 3745-31-05?

Section II - Specific Air Contaminant Source Information

☐ yes - Note: notification requirements in rules cited above must be followed.
☒ no

11. The appropriate Emissions Activity Category (EAC) form(s) must be completed and attached for each air contaminant source. At least one complete EAC form must be submitted for each air contaminant source for the application to be considered complete. Refer to the list attached to the PTI instructions.

Section II - Specific Air Contaminant Source Information

NOTE: One copy of this section should be filled out for each air contaminant source covered by this PTI application. See the line by line PTI instructions for additional information.

1. Company identification (name for air contaminant source for which you are applying): COAL SILOS 3 & 4

2. List all equipment that are part of this air contaminant source: COAL SILOS 3 & 4

3. Air Contaminant Source Installation or Modification Schedule (must be completed regardless of date of installation or modification):

   When did/will you begin to install or modify the air contaminant source? (month/year) SECOND QUARTER 2008

   When did/will you begin to operate the air contaminant source? (month/year) THIRD QUARTER 2011 **OR** after issuance of PTI_____

4. Emissions Information: The following table requests information needed to determine the applicable requirements and the compliance status of this air contaminant source with those requirements. Suggestions for how to estimate emissions may be found in the instructions to the Emissions Activity Category (EAC) forms required with this application. If you need further assistance, contact your Ohio EPA permit representative.

   - If total potential emissions of HAPs or any Air Toxic is greater than 1 ton/yr, fill in the table for that (those) pollutant(s). For all other pollutants, if "Emissions before controls (max), lb/hr" multiplied by 24 hours/day is greater than 10 lb/day, fill in the table for that pollutant.
   - If you have no add-on control equipment, "Emissions before controls= will be the same as "Actual emissions"
   - Annual emissions should be based on operating 8760 hr/yr unless you are requesting operating restrictions to limit emissions in line # 8 or have described inherent limitations below.
   - If you use units other than lb/hr or ton/yr, specify the units used (e.g., gr/dscf, lb/ton charged, lb/MMBtu, ton/12-months).
   - Requested Allowable (ton/yr) is often equivalent to Potential to Emit (PTE) as defined in OAC rule 3745-31-01 and OAC rule 3745-77-01.

Pollutant	Emissions before controls (max) (lb/hr)	Actual emissions (lb/hr)	Actual emissions (ton/year)	Requested Allowable (lb/hr)	Requested Allowable (ton/year)
Particulate emissions (PE) (formerly particulate matter, PM)	400	0.9	3.8	0.9	3.8
PM_{10} (PM < 10 microns in diameter)	400	0.9	3.8	0.9	3.8
Sulfur dioxide (SO_2)	0	0	0	0	0
Nitrogen oxides (NO_x)	0	0	0	0	0
Carbon monoxide (CO)	0	0	0	0	0
Organic compounds (OC)	0	0	0	0	0
Volatile organic compounds (VOC)	0	0	0	0	0
Total HAPs	0	0	0	0	0
Highest single HAP:	0	0	0	0	0
Air Toxics (see instructions):	0	0	0	0	0

Provide your calculations as an attachment and explain how all process variables and emission factors were selected. Note the emissions factor(s) employed and document the origin. Example: AP-42, Table 4.4-3 (8/97); stack test, Method 5, 4/96; mass balance based on MSDS; etc.

Section II - Specific Air Contaminant Source Information

5. **Does this air contaminant source employ emissions control equipment?**

☒ **Yes** - fill out the applicable information below.

☐ **No** - proceed to item # 6.

Note: Pollutant abbreviations used below: Particulates = PE; Organic compounds = OC; Sulfur dioxide = SO_2; Nitrogen oxides = NOx; Carbon monoxide = CO

☐ **Cyclone/Multiclone**
Manufacturer: _____ Year installed: _____
What do you call this control equipment: _____
Pollutant(s) controlled: ☐ PE ☐ OC ☐ SO_2 ☐ NOx ☐ CO ☐ Other _____
Estimated capture efficiency (%): _____ Basis for efficiency: _____
Design control efficiency (%): _____ Basis for efficiency: _____
Type: ☐ Cyclone ☐ Multiclone ☐ Rotoclone ☐ Other _____
☐ This is the only control equipment on this air contaminant source
If no, this control equipment is: ☐ Primary ☐ Secondary ☐ Parallel
List any other air contaminant sources that are also vented to this control equipment:
_____

☒ **Fabric Filter/Baghouse**
Manufacturer: TO BE DETERMINED Year installed: NEW FACILITY
What do you call this control equipment: FEEDSTOCK PROCESSING BAGHOUSE 8
Pollutant(s) controlled: ☒ PE ☐ OC ☐ SO_2 ☐ NOx ☐ CO ☐ Other _____
Estimated capture efficiency (%):100 Basis for efficiency: ENGINEERING DESIGN
Design control efficiency (%):99.9 Basis for efficiency: LITERATURE
Operating pressure drop range (inches of water): Minimum: 3 Maximum: 6
Pressure type: ☒ Negative pressure ☐ Positive pressure
Fabric cleaning mechanism: ☐ Reverse air ☒ Pulse jet ☐ Shaker ☐ Other _____
☐ Lime injection or fabric coating agent used: Type: _____ Feed rate: _____
☒ This is the only control equipment on this air contaminant source
If no, this control equipment is: ☐ Primary ☐ Secondary ☐ Parallel
List any other air contaminant sources that are also vented to this control equipment:
_____

☐ **Wet Scrubber**
Manufacturer: _____ Year installed: _____
What do you call this control equipment: _____
Pollutant(s) controlled: ☐ PE ☐ OC ☐ SO_2 ☐ NOx ☐ CO ☐ Other _____
Estimated capture efficiency (%): _____ Basis for efficiency: _____
Design control efficiency (%): _____ Basis for efficiency: _____
Type: ☐ Spray chamber ☐ Packed bed ☐ Impingement ☐ Venturi ☐ Other _____
Operating pressure drop range (inches of water): Minimum: _____ Maximum: _____
pH range for scrubbing liquid: Minimum: _____ Maximum: _____
Scrubbing liquid flow rate (gal/min): _____
Is scrubber liquid recirculated? ☐ Yes ☐ No
Water supply pressure (psig): _____ NOTE: This item for spray chambers only.
☐ This is the only control equipment on this air contaminant source
If no, this control equipment is: ☐ Primary ☐ Secondary ☐ Parallel
List any other air contaminant sources that are also vented to this control equipment:
_____

☐ **Electrostatic Precipitator**
Manufacturer: _____ Year installed: _____
What do you call this control equipment: _____
Pollutant(s) controlled: ☐ PE ☐ OC ☐ SO_2 ☐ NOx ☐ CO ☐ Other _____
Estimated capture efficiency (%): _____ Basis for efficiency: _____
Design control efficiency (%): _____ Basis for efficiency: _____

Section II - Specific Air Contaminant Source Information

Type: ☐ Plate-wire ☐ Flat-plate ☐ Tubular ☐ Wet ☐ Other _____
Number of operating fields: _____

☐ This is the only control equipment on this air contaminant source
If no, this control equipment is: ☐ Primary ☐ Secondary ☐ Parallel
List any other air contaminant sources that are also vented to this control equipment:
_____

☐ **Concentrator**
Manufacturer: _____ Year installed: _____
What do you call this control equipment: _____
Pollutant(s) controlled: ☐ PE ☐ OC ☐ SO_2 ☐ NOx ☐ CO ☐ Other _____
Estimated capture efficiency (%): _____ Basis for efficiency: _____
Design regeneration cycle time (minutes): _____
Minimum desorption air stream temperature (°F): _____
Rotational rate (revolutions/hour): _____
☐ This is the only control equipment on this air contaminant source
If no, this control equipment is: ☐ Primary ☐ Secondary ☐ Parallel
List any other air contaminant sources that are also vented to this control equipment:
_____

☐ **Catalytic Incinerator**
Manufacturer: _____ Year installed: _____
What do you call this control equipment: _____
Pollutant(s) controlled: ☐ PE ☐ OC ☐ SO_2 ☐ NOx ☐ CO ☐ Other _____
Estimated capture efficiency (%): _____ Basis for efficiency: _____
Design control efficiency (%): _____ Basis for efficiency: _____
Minimum inlet gas temperature (°F): _____
Combustion chamber residence time (seconds): _____
Minimum temperature difference (°F) across catalyst during air contaminant source operation: _____
☐ This is the only control equipment on this air contaminant source
If no, this control equipment is: ☐ Primary ☐ Secondary ☐ Parallel
List any other air contaminant sources that are also vented to this control equipment:
_____

☐ **Thermal Incinerator/Thermal Oxidizer**
Manufacturer: _____ Year installed: _____
What do you call this control equipment: _____
Pollutant(s) controlled: ☐ PE ☐ OC ☐ SO_2 ☐ NOx ☐ CO ☐ Other _____
Estimated capture efficiency (%): _____ Basis for efficiency: _____
Design control efficiency (%): _____ Basis for efficiency: _____
Minimum operating temperature (°F) and location: _____ (See line by line instructions.)
Combustion chamber residence time (seconds): _____
☐ This is the only control equipment on this air contaminant source
If no, this control equipment is: ☐ Primary ☐ Secondary ☐ Parallel
List any other air contaminant sources that are also vented to this control equipment:
_____

☐ **Flare**
Manufacturer: _____ Year installed: _____
What do you call this control equipment: _____
Pollutant(s) controlled: ☐ PE ☐ OC ☐ SO_2 ☐ NOx ☐ CO ☐ Other _____
Estimated capture efficiency (%): _____ Basis for efficiency: _____
Design control efficiency (%): _____ Basis for efficiency: _____
Type: ☐ Enclosed ☐ Elevated (open)
Ignition device: ☐ Electric arc ☐ Pilot flame
Flame presence sensor: ☐ Yes ☐ No
☐ This is the only control equipment on this air contaminant source
If no, this control equipment is: ☐ Primary ☐ Secondary ☐ Parallel
List any other air contaminant sources that are also vented to this control equipment:

Section II - Specific Air Contaminant Source Information

☐ **Condenser**
Manufacturer: _____ Year installed: _____
What do you call this control equipment: _____
Pollutant(s) controlled: ☐ PE ☐ OC ☐ SO_2 ☐ NOx ☐ CO ☐ Other _____
Estimated capture efficiency (%): _____ Basis for efficiency: _____
Design control efficiency (%): _____ Basis for efficiency: _____

Type: ☐ Indirect contact ☐ Direct contact
Maximum exhaust gas temperature (°F) during air contaminant source operation: _____
Coolant type: _____
Design coolant temperature (°F): Minimum _____ Maximum _____
Design coolant flow rate (gpm): _____
☐ This is the only control equipment on this air contaminant source
If no, this control equipment is: ☐ Primary ☐ Secondary ☐ Parallel
List any other air contaminant sources that are also vented to this control equipment:
_____

☐ **Carbon Absorber**
Manufacturer: _____ Year installed: _____
What do you call this control equipment: _____
Pollutant(s) controlled: ☐ PE ☐ OC ☐ SO_2 ☐ NOx ☐ CO ☐ Other _____
Estimated capture efficiency (%): _____ Basis for efficiency: _____
Design control efficiency (%): _____ Basis for efficiency: _____
Type: ☐ On-site regenerative ☐ Disposable
Maximum design outlet organic compound concentration (ppmv): _____
Carbon replacement frequency or regeneration cycle time (specify units): _____
Maximum temperature of the carbon bed, after regeneration (including any cooling cycle): _____
☐ This is the only control equipment on this air contaminant source
If no, this control equipment is: ☐ Primary ☐ Secondary ☐ Parallel
List any other air contaminant sources that are also vented to this control equipment:
_____

☐ **Dry Scrubber**
Manufacturer: _____ Year installed: _____
What do you call this control equipment: _____
Pollutant(s) controlled: ☐ PE ☐ OC ☐ SO_2 ☐ NOx ☐ CO ☐ Other _____
Estimated capture efficiency (%): _____ Basis for efficiency: _____
Design control efficiency (%): _____ Basis for efficiency: _____
Reagent(s) used: Type: _____ Injection rate(s): _____
Operating pressure drop range (inches of water): Minimum: _____ Maximum: _____
☐ This is the only control equipment on this air contaminant source
If no, this control equipment is: ☐ Primary ☐ Secondary ☐ Parallel
List any other air contaminant sources that are also vented to this control equipment:
_____

☐ **Paint booth filter**
Type: ☐ Paper ☐ Fiberglass ☐ Water curtain ☐ Other _____
Design control efficiency (%): _____ Basis for efficiency: _____

☐ **Other**, describe _____
Manufacturer: _____ Year installed: _____
What do you call this control equipment: _____
Pollutant(s) controlled: ☐ PE ☐ OC ☐ SO_2 ☐ NOx ☐ CO ☐ Other
Estimated capture efficiency (%): _____ Basis for efficiency: _____

Design control efficiency (%): _____ Basis for efficiency: _____
☐ This is the only control equipment on this air contaminant source
If no, this control equipment is: ☐ Primary ☐ Secondary ☐ Parallel

Section II - Specific Air Contaminant Source Information

List any other air contaminant sources that are also vented to this control equipment:

_____

6. Attach a Process or Activity Flow Diagram to this application for each air contaminant source included in the application. The diagram should indicate their relationships to one another. See the line by line PTI instructions for additional information.

7. Emissions egress point(s) information: PTIs which allow total emissions in excess of the thresholds listed below will be subject to an air quality modeling analysis. This analysis is to assure that the impact from the requested project will not exceed Ohio=s Acceptable Incremental Impacts for criteria pollutants and/or Maximum Allowable Ground Level Concentrations (MAGLC) for air toxics. Permit requests that would have unacceptable impacts can not be approved as proposed. See the line by line PTI instructions for additional information.

   Complete the tables below if the requested allowable annual emission rate for this PTI exceeds any of the following:

   - Particulate Matter (PM10): 10 tons per year
   - Sulfur Dioxide (SO2): 25 tons per year
   - Nitrogen Oxides (NOx): 25 tons per year
   - Carbon Monoxide (CO): 100 tons per year
   - Air Toxic: 1 ton per year. An air toxic is any air pollutant for which the American Council of Governmental Industrial Hygienists (ACGIH) has established a Threshold Limit Value (TLV).

   Complete Table 7-A below for each stack emissions egress point. An egress point is a point at which emissions from an air contaminant source are released into the ambient (outside) air. List each individual egress point on a separate line.

Table 7-A, Stack Egress Point Information

Company Name or ID for the Egress Point (examples: Stack A; Boiler Stack; etc.)	Type Code*	Stack Egress Point Shape and Dimensions (in)(examples: round 10 inch ID; rectangular 14 X 16 inches; etc.)	Stack Egress Point Height from the Ground (ft)	Stack Temp. at Max. Capacity (F)	Stack Flow Rate at Max. Capacity (ACFM)	Minimum Distance to the Property Line (ft)
COAL SILOS 3 & 4	A	RECT. 2 FT X 3 FT	250	68	20,000	1,000

*Type codes for stack egress points:

A. vertical stack (unobstructed): There are no obstructions to upward flow in or on the stack such as a rain cap.
B. vertical stack (obstructed): There are obstructions to the upward flow, such as a rain cap, which prevents or inhibits the air flow in a vertical direction.
C. non-vertical stack: The stack directs the air flow in a direction which is not directly upward.

Complete Table 7-B below for each fugitive emissions egress point. List each individual egress point on a separate line. Refer to the description of the fugitive egress point type codes below the table for use in completing the type code column of the table. For air contaminant sources like roadways and storage piles, only the first 5 columns need to be completed. For an air contaminant source with multiple fugitive emissions egress points, include only the primary egress points.

Table 7-B, Fugitive Egress Point Information

Company ID for the Egress Point (examples; Garage Door B, Building C; Roof Monitor; etc.)	Type Code*	Egress Point Description (examples: garage door, 12 X 30 feet, west wall; outside gravel storage piles; etc.)	Fugitive Egress Point Height from the Ground (ft)	Minimum Distance to the Property Line (ft)	Exit Gas Temp. (F)

Section II - Specific Air Contaminant Source Information

*Type codes for fugitive egress point:

D. door or window
E. other opening in the building without a duct
F. no stack and no building enclosing the air contaminant source (e.g., roadways)

Complete Table 7-C below for each Stack Egress Point identified in Table 7-A above. In each case, use the dimensions of the largest nearby building, building segment or structure. List each individual egress point on a separate line. Use the same Company Name or ID for the Egress Point in Table 7-C that was used in Table 7-A. See the line by line PTI instructions for additional information.

Table 7-C, Egress Point Additional Information (Add rows as necessary)

Company ID or Name for the Egress Point	Building Height (ft)	Building Width (ft)	Building Length (ft)
COAL SILOS 3 & 4	200	100	150

8. Request for Federally Enforceable Limits

As part of this permit application, do you wish to propose voluntary restrictions to limit emissions in order to avoid specific requirements listed below, (i.e., are you requesting federally enforceable limits to obtain synthetic minor status)?

☐ yes
☒ no
☐ not sure - please contact me if this affects me

If yes, why are you requesting federally enforceable limits? Check all that apply.

a. ☐ to avoid being a major source (see OAC rule 3745-77-01)
b. ☐ to avoid being a major MACT source (see OAC rule 3745-31-01)
c. ☐ to avoid being a major modification (see OAC rule 3745-31-01)
d. ☐ to avoid being a major stationary source (see OAC rule 3745-31-01)
e. ☐ to avoid an air dispersion modeling requirement (see Engineering Guide # 69)
f. ☐ to avoid another requirement. Describe: _____

If you checked a., b. or d., please attach a facility-wide potential to emit (PTE) analysis (for each pollutant) and synthetic minor strategy to this application. (See line by line instructions for definition of PTE.) If you checked c., please attach a net emission change analysis to this application.

9. If this air contaminant source utilizes any continuous emissions monitoring equipment for indicating or demonstrating compliance, complete the following table. This does not include continuous parametric monitoring systems.

Company ID for Egress Point	Type of Monitor	Applicable performance specification (40 CFR 60, Appendix B)	Pollutant(s) Monitored

10. Do you wish to permit this air contaminant source as a portable source, allowing relocation within the state in accordance with OAC rule 3745-31-03 or OAC rule 3745-31-05?

Section II - Specific Air Contaminant Source Information

☐ yes - Note: notification requirements in rules cited above must be followed.
☒ no

11. The appropriate Emissions Activity Category (EAC) form(s) must be completed and attached for each air contaminant source. At least one complete EAC form must be submitted for each air contaminant source for the application to be considered complete. Refer to the list attached to the PTI instructions.

Section II - Specific Air Contaminant Source Information

NOTE: One copy of this section should be filled out for each air contaminant source covered by this PTI application. See the line by line PTI instructions for additional information.

1. Company identification (name for air contaminant source for which you are applying): COAL SILOS 5 & 6

2. List all equipment that are part of this air contaminant source: COAL SILOS 5 & 6

3. Air Contaminant Source Installation or Modification Schedule (must be completed regardless of date of installation or modification):

   When did/will you begin to install or modify the air contaminant source? (month/year) SECOND QUARTER 2008

   When did/will you begin to operate the air contaminant source? (month/year) THIRD QUARTER 2011 **OR** after issuance of PTI _____

4. Emissions Information: The following table requests information needed to determine the applicable requirements and the compliance status of this air contaminant source with those requirements. Suggestions for how to estimate emissions may be found in the instructions to the Emissions Activity Category (EAC) forms required with this application. If you need further assistance, contact your Ohio EPA permit representative.

   - If total potential emissions of HAPs or any Air Toxic is greater than 1 ton/yr, fill in the table for that (those) pollutant(s). For all other pollutants, if "Emissions before controls (max), lb/hr" multiplied by 24 hours/day is greater than 10 lb/day, fill in the table for that pollutant.
   - If you have no add-on control equipment, "Emissions before controls= will be the same as "Actual emissions"
   - Annual emissions should be based on operating 8760 hr/yr unless you are requesting operating restrictions to limit emissions in line # 8 or have described inherent limitations below.
   - If you use units other than lb/hr or ton/yr, specify the units used (e.g., gr/dscf, lb/ton charged, lb/MMBtu, ton/12-months).
   - Requested Allowable (ton/yr) is often equivalent to Potential to Emit (PTE) as defined in OAC rule 3745-31-01 and OAC rule 3745-77-01.

Pollutant	Emissions before controls (max) (lb/hr)	Actual emissions (lb/hr)	Actual emissions (ton/year)	Requested Allowable (lb/hr)	Requested Allowable (ton/year)
Particulate emissions (PE) (formerly particulate matter, PM)	400	0.9	3.8	0.9	3.8
PM_{10} (PM < 10 microns in diameter)	400	0.9	3.8	0.9	3.8
Sulfur dioxide (SO_2)	0	0	0	0	0
Nitrogen oxides (NO_x)	0	0	0	0	0
Carbon monoxide (CO)	0	0	0	0	0
Organic compounds (OC)	0	0	0	0	0
Volatile organic compounds (VOC)	0	0	0	0	0
Total HAPs	0	0	0	0	0
Highest single HAP:	0	0	0	0	0
Air Toxics (see instructions):	0	0	0	0	0

Provide your calculations as an attachment and explain how all process variables and emission factors were selected. Note the emissions factor(s) employed and document the origin. Example: AP-42, Table 4.4-3 (8/97); stack test, Method 5, 4/96; mass balance based on MSDS; etc.

Section II - Specific Air Contaminant Source Information

5. **Does this air contaminant source employ emissions control equipment?**

☒ **Yes** - fill out the applicable information below.

☐ **No** - proceed to item # 6.

Note: Pollutant abbreviations used below: Particulates = PE; Organic compounds = OC; Sulfur dioxide = SO_2; Nitrogen oxides = NOx; Carbon monoxide = CO

☐ **Cyclone/Multiclone**
Manufacturer: _____ Year installed: _____
What do you call this control equipment: _____
Pollutant(s) controlled: ☐ PE ☐ OC ☐ SO_2 ☐ NOx ☐ CO ☐ Other _____
Estimated capture efficiency (%): _____ Basis for efficiency: _____
Design control efficiency (%): _____ Basis for efficiency: _____
Type: ☐ Cyclone ☐ Multiclone ☐ Rotoclone ☐ Other _____
☐ This is the only control equipment on this air contaminant source
If no, this control equipment is: ☐ Primary ☐ Secondary ☐ Parallel
List any other air contaminant sources that are also vented to this control equipment:
_____

☒ **Fabric Filter/Baghouse**
Manufacturer: TO BE DETERMINED Year installed: NEW FACILITY
What do you call this control equipment: FEEDSTOCK PROCESSING BAGHOUSE 9
Pollutant(s) controlled: ☒ PE ☐ OC ☐ SO_2 ☐ NOx ☐ CO ☐ Other _____
Estimated capture efficiency (%):100 Basis for efficiency: ENGINEERING DESIGN
Design control efficiency (%):99.9 Basis for efficiency: LITERATURE
Operating pressure drop range (inches of water): Minimum: 3 Maximum: 6
Pressure type: ☒ Negative pressure ☐ Positive pressure
Fabric cleaning mechanism: ☐ Reverse air ☒ Pulse jet ☐ Shaker ☐ Other _____
☐ Lime injection or fabric coating agent used: Type: _____ Feed rate: _____
☒ This is the only control equipment on this air contaminant source
If no, this control equipment is: ☐ Primary ☐ Secondary ☐ Parallel
List any other air contaminant sources that are also vented to this control equipment:
_____

☐ **Wet Scrubber**
Manufacturer: _____ Year installed: _____
What do you call this control equipment: _____
Pollutant(s) controlled: ☐ PE ☐ OC ☐ SO_2 ☐ NOx ☐ CO ☐ Other _____
Estimated capture efficiency (%): _____ Basis for efficiency: _____
Design control efficiency (%): _____ Basis for efficiency: _____
Type: ☐ Spray chamber ☐ Packed bed ☐ Impingement ☐ Venturi ☐ Other _____
Operating pressure drop range (inches of water): Minimum: _____ Maximum: _____
pH range for scrubbing liquid: Minimum: _____ Maximum: _____
Scrubbing liquid flow rate (gal/min): _____
Is scrubber liquid recirculated? ☐ Yes ☐ No
Water supply pressure (psig): _____ NOTE: This item for spray chambers only.
☐ This is the only control equipment on this air contaminant source
If no, this control equipment is: ☐ Primary ☐ Secondary ☐ Parallel
List any other air contaminant sources that are also vented to this control equipment:
_____

☐ **Electrostatic Precipitator**
Manufacturer: _____ Year installed: _____
What do you call this control equipment: _____
Pollutant(s) controlled: ☐ PE ☐ OC ☐ SO_2 ☐ NOx ☐ CO ☐ Other _____
Estimated capture efficiency (%): _____ Basis for efficiency: _____
Design control efficiency (%): _____ Basis for efficiency: _____

Section II - Specific Air Contaminant Source Information

Type: ☐ Plate-wire ☐ Flat-plate ☐ Tubular ☐ Wet ☐ Other _____
Number of operating fields: _____

☐ This is the only control equipment on this air contaminant source
If no, this control equipment is: ☐ Primary ☐ Secondary ☐ Parallel
List any other air contaminant sources that are also vented to this control equipment:
_____

☐ **Concentrator**
Manufacturer: _____ Year installed: _____
What do you call this control equipment: _____
Pollutant(s) controlled: ☐ PE ☐ OC ☐ SO_2 ☐ NOx ☐ CO ☐ Other _____
Estimated capture efficiency (%): _____ Basis for efficiency: _____
Design regeneration cycle time (minutes): _____
Minimum desorption air stream temperature (°F): _____
Rotational rate (revolutions/hour): _____
☐ This is the only control equipment on this air contaminant source
If no, this control equipment is: ☐ Primary ☐ Secondary ☐ Parallel
List any other air contaminant sources that are also vented to this control equipment:
_____

☐ **Catalytic Incinerator**
Manufacturer: _____ Year installed: _____
What do you call this control equipment: _____
Pollutant(s) controlled: ☐ PE ☐ OC ☐ SO_2 ☐ NOx ☐ CO ☐ Other _____
Estimated capture efficiency (%): _____ Basis for efficiency: _____
Design control efficiency (%): _____ Basis for efficiency: _____
Minimum inlet gas temperature (°F): _____
Combustion chamber residence time (seconds): _____
Minimum temperature difference (°F) across catalyst during air contaminant source operation: _____
☐ This is the only control equipment on this air contaminant source
If no, this control equipment is: ☐ Primary ☐ Secondary ☐ Parallel
List any other air contaminant sources that are also vented to this control equipment:
_____

☐ **Thermal Incinerator/Thermal Oxidizer**
Manufacturer: _____ Year installed: _____
What do you call this control equipment: _____
Pollutant(s) controlled: ☐ PE ☐ OC ☐ SO_2 ☐ NOx ☐ CO ☐ Other _____
Estimated capture efficiency (%): _____ Basis for efficiency: _____
Design control efficiency (%): _____ Basis for efficiency: _____
Minimum operating temperature (°F) and location: _____ (See line by line instructions.)
Combustion chamber residence time (seconds): _____
☐ This is the only control equipment on this air contaminant source
If no, this control equipment is: ☐ Primary ☐ Secondary ☐ Parallel
List any other air contaminant sources that are also vented to this control equipment:
_____

☐ **Flare**
Manufacturer: _____ Year installed: _____
What do you call this control equipment: _____
Pollutant(s) controlled: ☐ PE ☐ OC ☐ SO_2 ☐ NOx ☐ CO ☐ Other _____
Estimated capture efficiency (%): _____ Basis for efficiency: _____
Design control efficiency (%): _____ Basis for efficiency: _____
Type: ☐ Enclosed ☐ Elevated (open)
Ignition device: ☐ Electric arc ☐ Pilot flame
Flame presence sensor: ☐ Yes ☐ No
☐ This is the only control equipment on this air contaminant source
If no, this control equipment is: ☐ Primary ☐ Secondary ☐ Parallel
List any other air contaminant sources that are also vented to this control equipment:

Section II - Specific Air Contaminant Source Information

☐ **Condenser**

Manufacturer: _____ Year installed: _____
What do you call this control equipment: _____
Pollutant(s) controlled: ☐ PE ☐ OC ☐ SO_2 ☐ NOx ☐ CO ☐ Other _____
Estimated capture efficiency (%): _____ Basis for efficiency: _____
Design control efficiency (%): _____ Basis for efficiency: _____

Type: ☐ Indirect contact ☐ Direct contact
Maximum exhaust gas temperature (°F) during air contaminant source operation: _____
Coolant type: _____
Design coolant temperature (°F): Minimum _____ Maximum _____
Design coolant flow rate (gpm): _____
☐ This is the only control equipment on this air contaminant source
If no, this control equipment is: ☐ Primary ☐ Secondary ☐ Parallel
List any other air contaminant sources that are also vented to this control equipment:
_____

☐ **Carbon Absorber**

Manufacturer: _____ Year installed: _____
What do you call this control equipment: _____
Pollutant(s) controlled: ☐ PE ☐ OC ☐ SO_2 ☐ NOx ☐ CO ☐ Other _____
Estimated capture efficiency (%): _____ Basis for efficiency: _____
Design control efficiency (%): _____ Basis for efficiency: _____
Type: ☐ On-site regenerative ☐ Disposable
Maximum design outlet organic compound concentration (ppmv): _____
Carbon replacement frequency or regeneration cycle time (specify units): _____
Maximum temperature of the carbon bed, after regeneration (including any cooling cycle): _____
☐ This is the only control equipment on this air contaminant source
If no, this control equipment is: ☐ Primary ☐ Secondary ☐ Parallel
List any other air contaminant sources that are also vented to this control equipment:
_____

☐ **Dry Scrubber**

Manufacturer: _____ Year installed: _____
What do you call this control equipment: _____
Pollutant(s) controlled: ☐ PE ☐ OC ☐ SO_2 ☐ NOx ☐ CO ☐ Other _____
Estimated capture efficiency (%): _____ Basis for efficiency: _____
Design control efficiency (%): _____ Basis for efficiency: _____
Reagent(s) used: Type: _____ Injection rate(s): _____
Operating pressure drop range (inches of water): Minimum: _____ Maximum: _____
☐ This is the only control equipment on this air contaminant source
If no, this control equipment is: ☐ Primary ☐ Secondary ☐ Parallel
List any other air contaminant sources that are also vented to this control equipment:
_____

☐ **Paint booth filter**

Type: ☐ Paper ☐ Fiberglass ☐ Water curtain ☐ Other _____
Design control efficiency (%): _____ Basis for efficiency: _____

☐ **Other**, describe _____

Manufacturer: _____ Year installed: _____
What do you call this control equipment: _____
Pollutant(s) controlled: ☐ PE ☐ OC ☐ SO_2 ☐ NOx ☐ CO ☐ Other
Estimated capture efficiency (%): _____ Basis for efficiency: _____

Design control efficiency (%): _____ Basis for efficiency: _____
☐ This is the only control equipment on this air contaminant source
If no, this control equipment is: ☐ Primary ☐ Secondary ☐ Parallel

Section II - Specific Air Contaminant Source Information

List any other air contaminant sources that are also vented to this control equipment:

_____

6. Attach a Process or Activity Flow Diagram to this application for each air contaminant source included in the application. The diagram should indicate their relationships to one another. See the line by line PTI instructions for additional information.

7. Emissions egress point(s) information: PTIs which allow total emissions in excess of the thresholds listed below will be subject to an air quality modeling analysis. This analysis is to assure that the impact from the requested project will not exceed Ohio=s Acceptable Incremental Impacts for criteria pollutants and/or Maximum Allowable Ground Level Concentrations (MAGLC) for air toxics. Permit requests that would have unacceptable impacts can not be approved as proposed. See the line by line PTI instructions for additional information.

   Complete the tables below if the requested allowable annual emission rate for this PTI exceeds any of the following:

   - Particulate Matter (PM10): 10 tons per year
   - Sulfur Dioxide (SO2): 25 tons per year
   - Nitrogen Oxides (NOx): 25 tons per year
   - Carbon Monoxide (CO): 100 tons per year
   - Air Toxic: 1 ton per year. An air toxic is any air pollutant for which the American Council of Governmental Industrial Hygienists (ACGIH) has established a Threshold Limit Value (TLV).

   Complete Table 7-A below for each stack emissions egress point. An egress point is a point at which emissions from an air contaminant source are released into the ambient (outside) air. List each individual egress point on a separate line.

Table 7-A, Stack Egress Point Information

Company Name or ID for the Egress Point (examples: Stack A; Boiler Stack; etc.)	Type Code*	Stack Egress Point Shape and Dimensions (in)(examples: round 10 inch ID; rectangular 14 X 16 inches; etc.)	Stack Egress Point Height from the Ground (ft)	Stack Temp. at Max. Capacity (F)	Stack Flow Rate at Max. Capacity (ACFM)	Minimum Distance to the Property Line (ft)
COAL SILOS 5 & 6	A	RECT. 2 FT X 3 FT	250	68	20,000	1,000

*Type codes for stack egress points:

A. vertical stack (unobstructed): There are no obstructions to upward flow in or on the stack such as a rain cap.
B. vertical stack (obstructed): There are obstructions to the upward flow, such as a rain cap, which prevents or inhibits the air flow in a vertical direction.
C. non-vertical stack: The stack directs the air flow in a direction which is not directly upward.

Complete Table 7-B below for each fugitive emissions egress point. List each individual egress point on a separate line. Refer to the description of the fugitive egress point type codes below the table for use in completing the type code column of the table. For air contaminant sources like roadways and storage piles, only the first 5 columns need to be completed. For an air contaminant source with multiple fugitive emissions egress points, include only the primary egress points.

Table 7-B, Fugitive Egress Point Information

Company ID for the Egress Point (examples; Garage Door B, Building C; Roof Monitor; etc.)	Type Code*	Egress Point Description (examples: garage door, 12 X 30 feet, west wall; outside gravel storage piles; etc.)	Fugitive Egress Point Height from the Ground (ft)	Minimum Distance to the Property Line (ft)	Exit Gas Temp. (F)

Section II - Specific Air Contaminant Source Information

*Type codes for fugitive egress point:

D. door or window
E. other opening in the building without a duct
F. no stack and no building enclosing the air contaminant source (e.g., roadways)

Complete Table 7-C below for each Stack Egress Point identified in Table 7-A above. In each case, use the dimensions of the largest nearby building, building segment or structure. List each individual egress point on a separate line. Use the same Company Name or ID for the Egress Point in Table 7-C that was used in Table 7-A. See the line by line PTI instructions for additional information.

Table 7-C, Egress Point Additional Information (Add rows as necessary)

Company ID or Name for the Egress Point	Building Height (ft)	Building Width (ft)	Building Length (ft)
COAL SILOS 5 & 6	200	100	150

8. Request for Federally Enforceable Limits

As part of this permit application, do you wish to propose voluntary restrictions to limit emissions in order to avoid specific requirements listed below, (i.e., are you requesting federally enforceable limits to obtain synthetic minor status)?

☐ yes
☒ no
☐ not sure - please contact me if this affects me

If yes, why are you requesting federally enforceable limits? Check all that apply.

a. ☐ to avoid being a major source (see OAC rule 3745-77-01)
b. ☐ to avoid being a major MACT source (see OAC rule 3745-31-01)
c. ☐ to avoid being a major modification (see OAC rule 3745-31-01)
d. ☐ to avoid being a major stationary source (see OAC rule 3745-31-01)
e. ☐ to avoid an air dispersion modeling requirement (see Engineering Guide # 69)
f. ☐ to avoid another requirement. Describe: _____

If you checked a., b. or d., please attach a facility-wide potential to emit (PTE) analysis (for each pollutant) and synthetic minor strategy to this application. (See line by line instructions for definition of PTE.) If you checked c., please attach a net emission change analysis to this application.

9. If this air contaminant source utilizes any continuous emissions monitoring equipment for indicating or demonstrating compliance, complete the following table. This does not include continuous parametric monitoring systems.

Company ID for Egress Point	Type of Monitor	Applicable performance specification (40 CFR 60, Appendix B)	Pollutant(s) Monitored

10. Do you wish to permit this air contaminant source as a portable source, allowing relocation within the state in accordance with OAC rule 3745-31-03 or OAC rule 3745-31-05?

Section II - Specific Air Contaminant Source Information

☐ yes - Note: notification requirements in rules cited above must be followed.
☒ no

11. The appropriate Emissions Activity Category (EAC) form(s) must be completed and attached for each air contaminant source. At least one complete EAC form must be submitted for each air contaminant source for the application to be considered complete. Refer to the list attached to the PTI instructions.

Section II - Specific Air Contaminant Source Information

NOTE: One copy of this section should be filled out for each air contaminant source covered by this PTI application. See the line by line PTI instructions for additional information.

1. Company identification (name for air contaminant source for which you are applying): BIOMASS SILOS 1 & 2

2. List all equipment that are part of this air contaminant source: BIOMASS SILOS 1 & 2

3. Air Contaminant Source Installation or Modification Schedule (must be completed regardless of date of installation or modification):

   When did/will you begin to install or modify the air contaminant source? (month/year) SECOND QUARTER 2008

   When did/will you begin to operate the air contaminant source? (month/year) THIRD QUARTER 2011 **OR** after issuance of PTI _____

4. Emissions Information: The following table requests information needed to determine the applicable requirements and the compliance status of this air contaminant source with those requirements. Suggestions for how to estimate emissions may be found in the instructions to the Emissions Activity Category (EAC) forms required with this application. If you need further assistance, contact your Ohio EPA permit representative.

   - If total potential emissions of HAPs or any Air Toxic is greater than 1 ton/yr, fill in the table for that (those) pollutant(s). For all other pollutants, if "Emissions before controls (max), lb/hr" multiplied by 24 hours/day is greater than 10 lb/day, fill in the table for that pollutant.
   - If you have no add-on control equipment, "Emissions before controls= will be the same as "Actual emissions"
   - Annual emissions should be based on operating 8760 hr/yr unless you are requesting operating restrictions to limit emissions in line # 8 or have described inherent limitations below.
   - If you use units other than lb/hr or ton/yr, specify the units used (e.g., gr/dscf, lb/ton charged, lb/MMBtu, ton/12-months).
   - Requested Allowable (ton/yr) is often equivalent to Potential to Emit (PTE) as defined in OAC rule 3745-31-01 and OAC rule 3745-77-01.

Pollutant	Emissions before controls (max) (lb/hr)	Actual emissions (lb/hr)	Actual emissions (ton/year)	Requested Allowable (lb/hr)	Requested Allowable (ton/year)
Particulate emissions (PE) (formerly particulate matter, PM)	400	0.9	3.8	0.9	3.8
PM_{10} (PM < 10 microns in diameter)	400	0.9	3.8	0.9	3.8
Sulfur dioxide (SO_2)	0	0	0	0	0
Nitrogen oxides (NO_x)	0	0	0	0	0
Carbon monoxide (CO)	0	0	0	0	0
Organic compounds (OC)	0	0	0	0	0
Volatile organic compounds (VOC)	0	0	0	0	0
Total HAPs	0	0	0	0	0
Highest single HAP:	0	0	0	0	0
Air Toxics (see instructions):	0	0	0	0	0

Provide your calculations as an attachment and explain how all process variables and emission factors were selected. Note the emissions factor(s) employed and document the origin. Example: AP-42, Table 4.4-3 (8/97); stack test, Method 5, 4/96; mass balance based on MSDS; etc.

Section II - Specific Air Contaminant Source Information

5. **Does this air contaminant source employ emissions control equipment?**

☒ **Yes** - fill out the applicable information below.

☐ **No** - proceed to item # 6.

Note: Pollutant abbreviations used below: Particulates = PE; Organic compounds = OC; Sulfur dioxide = SO_2; Nitrogen oxides = NOx; Carbon monoxide = CO

☐ **Cyclone/Multiclone**

Manufacturer: _____ Year installed: _____
What do you call this control equipment: _____
Pollutant(s) controlled: ☐ PE ☐ OC ☐ SO_2 ☐ NOx ☐ CO ☐ Other _____
Estimated capture efficiency (%): _____ Basis for efficiency: _____
Design control efficiency (%): _____ Basis for efficiency: _____
Type: ☐ Cyclone ☐ Multiclone ☐ Rotoclone ☐ Other _____
☐ This is the only control equipment on this air contaminant source
If no, this control equipment is: ☐ Primary ☐ Secondary ☐ Parallel
List any other air contaminant sources that are also vented to this control equipment:
_____

☒ **Fabric Filter/Baghouse**

Manufacturer: TO BE DETERMINED Year installed: NEW FACILITY
What do you call this control equipment: FEEDSTOCK PROCESSING BAGHOUSE 11
Pollutant(s) controlled: ☒ PE ☐ OC ☐ SO_2 ☐ NOx ☐ CO ☐ Other _____
Estimated capture efficiency (%):100 Basis for efficiency: ENGINEERING DESIGN
Design control efficiency (%):99.9 Basis for efficiency: LITERATURE
Operating pressure drop range (inches of water): Minimum: 3 Maximum: 6
Pressure type: ☒ Negative pressure ☐ Positive pressure
Fabric cleaning mechanism: ☐ Reverse air ☒ Pulse jet ☐ Shaker ☐ Other _____
☐ Lime injection or fabric coating agent used: Type: _____ Feed rate: _____
☒ This is the only control equipment on this air contaminant source
If no, this control equipment is: ☐ Primary ☐ Secondary ☐ Parallel
List any other air contaminant sources that are also vented to this control equipment:
_____

☐ **Wet Scrubber**

Manufacturer: _____ Year installed: _____
What do you call this control equipment: _____
Pollutant(s) controlled: ☐ PE ☐ OC ☐ SO_2 ☐ NOx ☐ CO ☐ Other _____
Estimated capture efficiency (%): _____ Basis for efficiency: _____
Design control efficiency (%): _____ Basis for efficiency: _____
Type: ☐ Spray chamber ☐ Packed bed ☐ Impingement ☐ Venturi ☐ Other _____
Operating pressure drop range (inches of water): Minimum: _____ Maximum: _____
pH range for scrubbing liquid: Minimum: _____ Maximum: _____
Scrubbing liquid flow rate (gal/min): _____
Is scrubber liquid recirculated? ☐ Yes ☐ No
Water supply pressure (psig): _____ NOTE: This item for spray chambers only.
☐ This is the only control equipment on this air contaminant source
If no, this control equipment is: ☐ Primary ☐ Secondary ☐ Parallel
List any other air contaminant sources that are also vented to this control equipment:
_____

☐ **Electrostatic Precipitator**

Manufacturer: _____ Year installed: _____
What do you call this control equipment: _____
Pollutant(s) controlled: ☐ PE ☐ OC ☐ SO_2 ☐ NOx ☐ CO ☐ Other _____
Estimated capture efficiency (%): _____ Basis for efficiency: _____
Design control efficiency (%): _____ Basis for efficiency: _____

Section II - Specific Air Contaminant Source Information

Type: ☐ Plate-wire ☐ Flat-plate ☐ Tubular ☐ Wet ☐ Other _____
Number of operating fields: _____

☐ This is the only control equipment on this air contaminant source
If no, this control equipment is: ☐ Primary ☐ Secondary ☐ Parallel
List any other air contaminant sources that are also vented to this control equipment:
_____

☐ **Concentrator**
Manufacturer: _____ Year installed: _____
What do you call this control equipment: _____
Pollutant(s) controlled: ☐ PE ☐ OC ☐ SO_2 ☐ NOx ☐ CO ☐ Other _____
Estimated capture efficiency (%): _____ Basis for efficiency: _____
Design regeneration cycle time (minutes): _____
Minimum desorption air stream temperature (°F): _____
Rotational rate (revolutions/hour): _____
☐ This is the only control equipment on this air contaminant source
If no, this control equipment is: ☐ Primary ☐ Secondary ☐ Parallel
List any other air contaminant sources that are also vented to this control equipment:
_____

☐ **Catalytic Incinerator**
Manufacturer: _____ Year installed: _____
What do you call this control equipment: _____
Pollutant(s) controlled: ☐ PE ☐ OC ☐ SO_2 ☐ NOx ☐ CO ☐ Other _____
Estimated capture efficiency (%): _____ Basis for efficiency: _____
Design control efficiency (%): _____ Basis for efficiency: _____
Minimum inlet gas temperature (°F): _____
Combustion chamber residence time (seconds): _____
Minimum temperature difference (°F) across catalyst during air contaminant source operation: _____
☐ This is the only control equipment on this air contaminant source
If no, this control equipment is: ☐ Primary ☐ Secondary ☐ Parallel
List any other air contaminant sources that are also vented to this control equipment:
_____

☐ **Thermal Incinerator/Thermal Oxidizer**
Manufacturer: _____ Year installed: _____
What do you call this control equipment: _____
Pollutant(s) controlled: ☐ PE ☐ OC ☐ SO_2 ☐ NOx ☐ CO ☐ Other _____
Estimated capture efficiency (%): _____ Basis for efficiency: _____
Design control efficiency (%): _____ Basis for efficiency: _____
Minimum operating temperature (°F) and location: _____ (See line by line instructions.)
Combustion chamber residence time (seconds): _____
☐ This is the only control equipment on this air contaminant source
If no, this control equipment is: ☐ Primary ☐ Secondary ☐ Parallel
List any other air contaminant sources that are also vented to this control equipment:
_____

☐ **Flare**
Manufacturer: _____ Year installed: _____
What do you call this control equipment: _____
Pollutant(s) controlled: ☐ PE ☐ OC ☐ SO_2 ☐ NOx ☐ CO ☐ Other _____
Estimated capture efficiency (%): _____ Basis for efficiency: _____
Design control efficiency (%): _____ Basis for efficiency: _____
Type: ☐ Enclosed ☐ Elevated (open)
Ignition device: ☐ Electric arc ☐ Pilot flame
Flame presence sensor: ☐ Yes ☐ No
☐ This is the only control equipment on this air contaminant source
If no, this control equipment is: ☐ Primary ☐ Secondary ☐ Parallel
List any other air contaminant sources that are also vented to this control equipment:

Section II - Specific Air Contaminant Source Information

☐ **Condenser**
Manufacturer: _____ Year installed: _____
What do you call this control equipment: _____
Pollutant(s) controlled: ☐ PE ☐ OC ☐ SO_2 ☐ NOx ☐ CO ☐ Other _____
Estimated capture efficiency (%): _____ Basis for efficiency: _____
Design control efficiency (%): _____ Basis for efficiency: _____

Type: ☐ Indirect contact ☐ Direct contact
Maximum exhaust gas temperature (°F) during air contaminant source operation: _____
Coolant type: _____
Design coolant temperature (°F): Minimum _____ Maximum _____
Design coolant flow rate (gpm): _____
☐ This is the only control equipment on this air contaminant source
If no, this control equipment is: ☐ Primary ☐ Secondary ☐ Parallel
List any other air contaminant sources that are also vented to this control equipment:
_____

☐ **Carbon Absorber**
Manufacturer: _____ Year installed: _____
What do you call this control equipment: _____
Pollutant(s) controlled: ☐ PE ☐ OC ☐ SO_2 ☐ NOx ☐ CO ☐ Other _____
Estimated capture efficiency (%): _____ Basis for efficiency: _____
Design control efficiency (%): _____ Basis for efficiency: _____
Type: ☐ On-site regenerative ☐ Disposable
Maximum design outlet organic compound concentration (ppmv): _____
Carbon replacement frequency or regeneration cycle time (specify units): _____
Maximum temperature of the carbon bed, after regeneration (including any cooling cycle): _____
☐ This is the only control equipment on this air contaminant source
If no, this control equipment is: ☐ Primary ☐ Secondary ☐ Parallel
List any other air contaminant sources that are also vented to this control equipment:
_____

☐ **Dry Scrubber**
Manufacturer: _____ Year installed: _____
What do you call this control equipment: _____
Pollutant(s) controlled: ☐ PE ☐ OC ☐ SO_2 ☐ NOx ☐ CO ☐ Other _____
Estimated capture efficiency (%): _____ Basis for efficiency: _____
Design control efficiency (%): _____ Basis for efficiency: _____
Reagent(s) used: Type: _____ Injection rate(s): _____
Operating pressure drop range (inches of water): Minimum: _____ Maximum: _____
☐ This is the only control equipment on this air contaminant source
If no, this control equipment is: ☐ Primary ☐ Secondary ☐ Parallel
List any other air contaminant sources that are also vented to this control equipment:
_____

☐ **Paint booth filter**
Type: ☐ Paper ☐ Fiberglass ☐ Water curtain ☐ Other _____
Design control efficiency (%): _____ Basis for efficiency: _____

☐ **Other,** describe _____
Manufacturer: _____ Year installed: _____
What do you call this control equipment: _____
Pollutant(s) controlled: ☐ PE ☐ OC ☐ SO_2 ☐ NOx ☐ CO ☐ Other
Estimated capture efficiency (%): _____ Basis for efficiency: _____

Design control efficiency (%): _____ Basis for efficiency: _____
☐ This is the only control equipment on this air contaminant source
If no, this control equipment is: ☐ Primary ☐ Secondary ☐ Parallel

Section II - Specific Air Contaminant Source Information

List any other air contaminant sources that are also vented to this control equipment:

6. Attach a Process or Activity Flow Diagram to this application for each air contaminant source included in the application. The diagram should indicate their relationships to one another. See the line by line PTI instructions for additional information.

7. Emissions egress point(s) information: PTIs which allow total emissions in excess of the thresholds listed below will be subject to an air quality modeling analysis. This analysis is to assure that the impact from the requested project will not exceed Ohio=s Acceptable Incremental Impacts for criteria pollutants and/or Maximum Allowable Ground Level Concentrations (MAGLC) for air toxics. Permit requests that would have unacceptable impacts can not be approved as proposed. See the line by line PTI instructions for additional information.

   Complete the tables below if the requested allowable annual emission rate for this PTI exceeds any of the following:

   - Particulate Matter (PM10): 10 tons per year
   - Sulfur Dioxide (SO2): 25 tons per year
   - Nitrogen Oxides (NOx): 25 tons per year
   - Carbon Monoxide (CO): 100 tons per year
   - Air Toxic: 1 ton per year. An air toxic is any air pollutant for which the American Council of Governmental Industrial Hygienists (ACGIH) has established a Threshold Limit Value (TLV).

   Complete Table 7-A below for each stack emissions egress point. An egress point is a point at which emissions from an air contaminant source are released into the ambient (outside) air. List each individual egress point on a separate line.

Table 7-A, Stack Egress Point Information

Company Name or ID for the Egress Point (examples: Stack A; Boiler Stack; etc.)	Type Code*	Stack Egress Point Shape and Dimensions (in)(examples: round 10 inch ID; rectangular 14 X 16 inches; etc.)	Stack Egress Point Height from the Ground (ft)	Stack Temp. at Max. Capacity (F)	Stack Flow Rate at Max. Capacity (ACFM)	Minimum Distance to the Property Line (ft)
BIOMASS SILOS 1 & 2	A	RECT. 2 FT X 3 FT	250	68	20,000	1,000

*Type codes for stack egress points:

A. vertical stack (unobstructed): There are no obstructions to upward flow in or on the stack such as a rain cap.
B. vertical stack (obstructed): There are obstructions to the upward flow, such as a rain cap, which prevents or inhibits the air flow in a vertical direction.
C. non-vertical stack: The stack directs the air flow in a direction which is not directly upward.

Complete Table 7-B below for each fugitive emissions egress point. List each individual egress point on a separate line. Refer to the description of the fugitive egress point type codes below the table for use in completing the type code column of the table. For air contaminant sources like roadways and storage piles, only the first 5 columns need to be completed. For an air contaminant source with multiple fugitive emissions egress points, include only the primary egress points.

Table 7-B, Fugitive Egress Point Information

Company ID for the Egress Point (examples; Garage Door B, Building C; Roof Monitor; etc.)	Type Code*	Egress Point Description (examples: garage door, 12 X 30 feet, west wall; outside gravel storage piles; etc.)	Fugitive Egress Point Height from the Ground (ft)	Minimum Distance to the Property Line (ft)	Exit Gas Temp. (F)

Section II - Specific Air Contaminant Source Information

*Type codes for fugitive egress point:

D. door or window
E. other opening in the building without a duct
F. no stack and no building enclosing the air contaminant source (e.g., roadways)

Complete Table 7-C below for each Stack Egress Point identified in Table 7-A above. In each case, use the dimensions of the largest nearby building, building segment or structure. List each individual egress point on a separate line. Use the same Company Name or ID for the Egress Point in Table 7-C that was used in Table 7-A. See the line by line PTI instructions for additional information.

Table 7-C, Egress Point Additional Information (Add rows as necessary)			
Company ID or Name for the Egress Point	**Building Height (ft)**	**Building Width (ft)**	**Building Length (ft)**
BIOMASS SILOS 1 & 2	200	100	150

8. Request for Federally Enforceable Limits

As part of this permit application, do you wish to propose voluntary restrictions to limit emissions in order to avoid specific requirements listed below, (i.e., are you requesting federally enforceable limits to obtain synthetic minor status)?

☐ yes
☒ no
☐ not sure - please contact me if this affects me

If yes, why are you requesting federally enforceable limits? Check all that apply.

a. ☐ to avoid being a major source (see OAC rule 3745-77-01)
b. ☐ to avoid being a major MACT source (see OAC rule 3745-31-01)
c. ☐ to avoid being a major modification (see OAC rule 3745-31-01)
d. ☐ to avoid being a major stationary source (see OAC rule 3745-31-01)
e. ☐ to avoid an air dispersion modeling requirement (see Engineering Guide # 69)
f. ☐ to avoid another requirement. Describe: _____

If you checked a., b. or d., please attach a facility-wide potential to emit (PTE) analysis (for each pollutant) and synthetic minor strategy to this application. (See line by line instructions for definition of PTE.) If you checked c., please attach a net emission change analysis to this application.

9. If this air contaminant source utilizes any continuous emissions monitoring equipment for indicating or demonstrating compliance, complete the following table. This does not include continuous parametric monitoring systems.

Company ID for Egress Point	Type of Monitor	Applicable performance specification (40 CFR 60, Appendix B)	Pollutant(s) Monitored

10. Do you wish to permit this air contaminant source as a portable source, allowing relocation within the state in accordance with OAC rule 3745-31-03 or OAC rule 3745-31-05?

Section II - Specific Air Contaminant Source Information

☐ yes - Note: notification requirements in rules cited above must be followed.
☒ no

11. The appropriate Emissions Activity Category (EAC) form(s) must be completed and attached for each air contaminant source. At least one complete EAC form must be submitted for each air contaminant source for the application to be considered complete. Refer to the list attached to the PTI instructions.

Section II - Specific Air Contaminant Source Information

NOTE: One copy of this section should be filled out for each air contaminant source covered by this PTI application. See the line by line PTI instructions for additional information.

1. Company identification (name for air contaminant source for which you are applying): COAL BUNKER 1

2. List all equipment that are part of this air contaminant source: COAL BUNKER 1

3. Air Contaminant Source Installation or Modification Schedule (must be completed regardless of date of installation or modification):

   When did/will you begin to install or modify the air contaminant source? (month/year) SECOND QUARTER 2008

   When did/will you begin to operate the air contaminant source? (month/year) THIRD QUARTER 2011 **OR** after issuance of PTI _____

4. Emissions Information: The following table requests information needed to determine the applicable requirements and the compliance status of this air contaminant source with those requirements. Suggestions for how to estimate emissions may be found in the instructions to the Emissions Activity Category (EAC) forms required with this application. If you need further assistance, contact your Ohio EPA permit representative.

   - If total potential emissions of HAPs or any Air Toxic is greater than 1 ton/yr, fill in the table for that (those) pollutant(s). For all other pollutants, if "Emissions before controls (max), lb/hr" multiplied by 24 hours/day is greater than 10 lb/day, fill in the table for that pollutant.
   - If you have no add-on control equipment, "Emissions before controls= will be the same as "Actual emissions"
   - Annual emissions should be based on operating 8760 hr/yr unless you are requesting operating restrictions to limit emissions in line # 8 or have described inherent limitations below.
   - If you use units other than lb/hr or ton/yr, specify the units used (e.g., gr/dscf, lb/ton charged, lb/MMBtu, ton/12-months).
   - Requested Allowable (ton/yr) is often equivalent to Potential to Emit (PTE) as defined in OAC rule 3745-31-01 and OAC rule 3745-77-01.

Pollutant	Emissions before controls (max) (lb/hr)	Actual emissions (lb/hr)	Actual emissions (ton/year)	Requested Allowable (lb/hr)	Requested Allowable (ton/year)
Particulate emissions (PE) (formerly particulate matter, PM)	40	0.43	1.9	0.43	1.9
PM_{10} (PM < 10 microns in diameter)	40	0.43	1.9	0.43	1.9
Sulfur dioxide (SO_2)	0	0	0	0	0
Nitrogen oxides (NO_x)	0	0	0	0	0
Carbon monoxide (CO)	0	0	0	0	0
Organic compounds (OC)	0	0	0	0	0
Volatile organic compounds (VOC)	0	0	0	0	0
Total HAPs	0	0	0	0	0
Highest single HAP:	0	0	0	0	0
Air Toxics (see instructions):	0	0	0	0	0

Provide your calculations as an attachment and explain how all process variables and emission factors were selected. Note the emissions factor(s) employed and document the origin. Example: AP-42, Table 4.4-3 (8/97); stack test, Method 5, 4/96; mass balance based on MSDS; etc.

Section II - Specific Air Contaminant Source Information

5. **Does this air contaminant source employ emissions control equipment?**

☒ **Yes** - fill out the applicable information below.

☐ **No** - proceed to item # 6.

Note: Pollutant abbreviations used below: Particulates = PE; Organic compounds = OC; Sulfur dioxide = SO_2; Nitrogen oxides = NOx; Carbon monoxide = CO

☐ **Cyclone/Multiclone**
Manufacturer: _____ Year installed: _____
What do you call this control equipment: _____
Pollutant(s) controlled: ☐ PE ☐ OC ☐ SO_2 ☐ NOx ☐ CO ☐ Other _____
Estimated capture efficiency (%): _____ Basis for efficiency: _____
Design control efficiency (%): _____ Basis for efficiency: _____
Type: ☐ Cyclone ☐ Multiclone ☐ Rotoclone ☐ Other _____
☐ This is the only control equipment on this air contaminant source
If no, this control equipment is: ☐ Primary ☐ Secondary ☐ Parallel
List any other air contaminant sources that are also vented to this control equipment:
_____

☒ **Fabric Filter/Baghouse**
Manufacturer: TO BE DETERMINED Year installed: NEW FACILITY
What do you call this control equipment: BUNKER FILTER 1
Pollutant(s) controlled: ☒ PE ☐ OC ☐ SO_2 ☐ NOx ☐ CO ☐ Other _____
Estimated capture efficiency (%):100 Basis for efficiency: ENGINEERING DESIGN
Design control efficiency (%):99.9 Basis for efficiency: LITERATURE
Operating pressure drop range (inches of water): Minimum: 3 Maximum: 6
Pressure type: ☐ Negative pressure ☒ Positive pressure
Fabric cleaning mechanism: ☐ Reverse air ☒ Pulse jet ☐ Shaker ☐ Other _____
☐ Lime injection or fabric coating agent used: Type: _____ Feed rate: _____
☒ This is the only control equipment on this air contaminant source
If no, this control equipment is: ☐ Primary ☐ Secondary ☐ Parallel
List any other air contaminant sources that are also vented to this control equipment:
_____

☐ **Wet Scrubber**
Manufacturer: _____ Year installed: _____
What do you call this control equipment: _____
Pollutant(s) controlled: ☐ PE ☐ OC ☐ SO_2 ☐ NOx ☐ CO ☐ Other _____
Estimated capture efficiency (%): _____ Basis for efficiency: _____
Design control efficiency (%): _____ Basis for efficiency: _____
Type: ☐ Spray chamber ☐ Packed bed ☐ Impingement ☐ Venturi ☐ Other _____
Operating pressure drop range (inches of water): Minimum: _____ Maximum: _____
pH range for scrubbing liquid: Minimum: _____ Maximum: _____
Scrubbing liquid flow rate (gal/min): _____
Is scrubber liquid recirculated? ☐ Yes ☐ No
Water supply pressure (psig): _____ NOTE: This item for spray chambers only.
☐ This is the only control equipment on this air contaminant source
If no, this control equipment is: ☐ Primary ☐ Secondary ☐ Parallel
List any other air contaminant sources that are also vented to this control equipment:
_____

☐ **Electrostatic Precipitator**
Manufacturer: _____ Year installed: _____
What do you call this control equipment: _____
Pollutant(s) controlled: ☐ PE ☐ OC ☐ SO_2 ☐ NOx ☐ CO ☐ Other _____
Estimated capture efficiency (%): _____ Basis for efficiency: _____
Design control efficiency (%): _____ Basis for efficiency: _____

Section II - Specific Air Contaminant Source Information

Type: ☐ Plate-wire ☐ Flat-plate ☐ Tubular ☐ Wet ☐ Other _____
Number of operating fields: _____

☐ This is the only control equipment on this air contaminant source
If no, this control equipment is: ☐ Primary ☐ Secondary ☐ Parallel
List any other air contaminant sources that are also vented to this control equipment:
_____

☐ **Concentrator**
Manufacturer: _____ Year installed: _____
What do you call this control equipment: _____
Pollutant(s) controlled: ☐ PE ☐ OC ☐ SO_2 ☐ NOx ☐ CO ☐ Other _____
Estimated capture efficiency (%):_____ Basis for efficiency: _____
Design regeneration cycle time (minutes): _____
Minimum desorption air stream temperature (°F): _____
Rotational rate (revolutions/hour): _____
☐ This is the only control equipment on this air contaminant source
If no, this control equipment is: ☐ Primary ☐ Secondary ☐ Parallel
List any other air contaminant sources that are also vented to this control equipment:
_____

☐ **Catalytic Incinerator**
Manufacturer: _____ Year installed: _____
What do you call this control equipment: _____
Pollutant(s) controlled: ☐ PE ☐ OC ☐ SO_2 ☐ NOx ☐ CO ☐ Other _____
Estimated capture efficiency (%):_____ Basis for efficiency: _____
Design control efficiency (%):_____ Basis for efficiency: _____
Minimum inlet gas temperature (°F): _____
Combustion chamber residence time (seconds): _____
Minimum temperature difference (°F) across catalyst during air contaminant source operation: _____
☐ This is the only control equipment on this air contaminant source
If no, this control equipment is: ☐ Primary ☐ Secondary ☐ Parallel
List any other air contaminant sources that are also vented to this control equipment:
_____

☐ **Thermal Incinerator/Thermal Oxidizer**
Manufacturer: _____ Year installed: _____
What do you call this control equipment: _____
Pollutant(s) controlled: ☐ PE ☐ OC ☐ SO_2 ☐ NOx ☐ CO ☐ Other _____
Estimated capture efficiency (%):_____ Basis for efficiency: _____
Design control efficiency (%):_____ Basis for efficiency: _____
Minimum operating temperature (°F) and location: _____ (See line by line instructions.)
Combustion chamber residence time (seconds): _____
☐ This is the only control equipment on this air contaminant source
If no, this control equipment is: ☐ Primary ☐ Secondary ☐ Parallel
List any other air contaminant sources that are also vented to this control equipment:
_____

☐ **Flare**
Manufacturer: _____ Year installed: _____
What do you call this control equipment: _____
Pollutant(s) controlled: ☐ PE ☐ OC ☐ SO_2 ☐ NOx ☐ CO ☐ Other _____
Estimated capture efficiency (%):_____ Basis for efficiency: _____
Design control efficiency (%):_____ Basis for efficiency: _____
Type: ☐ Enclosed ☐ Elevated (open)
Ignition device: ☐ Electric arc ☐ Pilot flame
Flame presence sensor: ☐ Yes ☐ No
☐ This is the only control equipment on this air contaminant source
If no, this control equipment is: ☐ Primary ☐ Secondary ☐ Parallel
List any other air contaminant sources that are also vented to this control equipment:

Section II - Specific Air Contaminant Source Information

☐ **Condenser**
Manufacturer: _____ Year installed: _____
What do you call this control equipment: _____
Pollutant(s) controlled: ☐ PE ☐ OC ☐ SO_2 ☐ NOx ☐ CO ☐ Other _____
Estimated capture efficiency (%): _____ Basis for efficiency: _____
Design control efficiency (%): _____ Basis for efficiency: _____

Type: ☐ Indirect contact ☐ Direct contact
Maximum exhaust gas temperature (°F) during air contaminant source operation: _____
Coolant type: _____
Design coolant temperature (°F): Minimum _____ Maximum _____
Design coolant flow rate (gpm): _____
☐ This is the only control equipment on this air contaminant source
If no, this control equipment is: ☐ Primary ☐ Secondary ☐ Parallel
List any other air contaminant sources that are also vented to this control equipment:
_____

☐ **Carbon Absorber**
Manufacturer: _____ Year installed: _____
What do you call this control equipment: _____
Pollutant(s) controlled: ☐ PE ☐ OC ☐ SO_2 ☐ NOx ☐ CO ☐ Other _____
Estimated capture efficiency (%): _____ Basis for efficiency: _____
Design control efficiency (%): _____ Basis for efficiency: _____
Type: ☐ On-site regenerative ☐ Disposable
Maximum design outlet organic compound concentration (ppmv): _____
Carbon replacement frequency or regeneration cycle time (specify units): _____
Maximum temperature of the carbon bed, after regeneration (including any cooling cycle): _____
☐ This is the only control equipment on this air contaminant source
If no, this control equipment is: ☐ Primary ☐ Secondary ☐ Parallel
List any other air contaminant sources that are also vented to this control equipment:
_____

☐ **Dry Scrubber**
Manufacturer: _____ Year installed: _____
What do you call this control equipment: _____
Pollutant(s) controlled: ☐ PE ☐ OC ☐ SO_2 ☐ NOx ☐ CO ☐ Other _____
Estimated capture efficiency (%): _____ Basis for efficiency: _____
Design control efficiency (%): _____ Basis for efficiency: _____
Reagent(s) used: Type: _____ Injection rate(s): _____
Operating pressure drop range (inches of water): Minimum: _____ Maximum: _____
☐ This is the only control equipment on this air contaminant source
If no, this control equipment is: ☐ Primary ☐ Secondary ☐ Parallel
List any other air contaminant sources that are also vented to this control equipment:
_____

☐ **Paint booth filter**
Type: ☐ Paper ☐ Fiberglass ☐ Water curtain ☐ Other _____
Design control efficiency (%): _____ Basis for efficiency: _____

☐ **Other**, describe _____
Manufacturer: _____ Year installed: _____
What do you call this control equipment: _____
Pollutant(s) controlled: ☐ PE ☐ OC ☐ SO_2 ☐ NOx ☐ CO ☐ Other
Estimated capture efficiency (%): _____ Basis for efficiency: _____

Design control efficiency (%): _____ Basis for efficiency: _____
☐ This is the only control equipment on this air contaminant source
If no, this control equipment is: ☐ Primary ☐ Secondary ☐ Parallel

Section II - Specific Air Contaminant Source Information

List any other air contaminant sources that are also vented to this control equipment:

6. Attach a Process or Activity Flow Diagram to this application for each air contaminant source included in the application. The diagram should indicate their relationships to one another. See the line by line PTI instructions for additional information.

7. Emissions egress point(s) information: PTIs which allow total emissions in excess of the thresholds listed below will be subject to an air quality modeling analysis. This analysis is to assure that the impact from the requested project will not exceed Ohio=s Acceptable Incremental Impacts for criteria pollutants and/or Maximum Allowable Ground Level Concentrations (MAGLC) for air toxics. Permit requests that would have unacceptable impacts can not be approved as proposed. See the line by line PTI instructions for additional information.

   Complete the tables below if the requested allowable annual emission rate for this PTI exceeds any of the following:

   - Particulate Matter (PM10): 10 tons per year
   - Sulfur Dioxide (SO2): 25 tons per year
   - Nitrogen Oxides (NOx): 25 tons per year
   - Carbon Monoxide (CO): 100 tons per year
   - Air Toxic: 1 ton per year. An air toxic is any air pollutant for which the American Council of Governmental Industrial Hygienists (ACGIH) has established a Threshold Limit Value (TLV).

   Complete Table 7-A below for each stack emissions egress point. An egress point is a point at which emissions from an air contaminant source are released into the ambient (outside) air. List each individual egress point on a separate line.

Table 7-A, Stack Egress Point Information

Company Name or ID for the Egress Point (examples: Stack A; Boiler Stack; etc.)	Type Code*	Stack Egress Point Shape and Dimensions (in)(examples: round 10 inch ID; rectangular 14 X 16 inches; etc.)	Stack Egress Point Height from the Ground (ft)	Stack Temp. at Max. Capacity (F)	Stack Flow Rate at Max. Capacity (ACFM)	Minimum Distance to the Property Line (ft)
COAL BUNKER 1	A	RECT. 2 FT X 3 FT	250	68	10,000	1,000

*Type codes for stack egress points:

A. vertical stack (unobstructed): There are no obstructions to upward flow in or on the stack such as a rain cap.
B. vertical stack (obstructed): There are obstructions to the upward flow, such as a rain cap, which prevents or inhibits the air flow in a vertical direction.
C. non-vertical stack: The stack directs the air flow in a direction which is not directly upward.

Complete Table 7-B below for each fugitive emissions egress point. List each individual egress point on a separate line. Refer to the description of the fugitive egress point type codes below the table for use in completing the type code column of the table. For air contaminant sources like roadways and storage piles, only the first 5 columns need to be completed. For an air contaminant source with multiple fugitive emissions egress points, include only the primary egress points.

Table 7-B, Fugitive Egress Point Information

Company ID for the Egress Point (examples; Garage Door B, Building C; Roof Monitor; etc.)	Type Code*	Egress Point Description (examples: garage door, 12 X 30 feet, west wall; outside gravel storage piles; etc.)	Fugitive Egress Point Height from the Ground (ft)	Minimum Distance to the Property Line (ft)	Exit Gas Temp. (F)

Section II - Specific Air Contaminant Source Information

*Type codes for fugitive egress point:

D. door or window
E. other opening in the building without a duct
F. no stack and no building enclosing the air contaminant source (e.g., roadways)

Complete Table 7-C below for each Stack Egress Point identified in Table 7-A above. In each case, use the dimensions of the largest nearby building, building segment or structure. List each individual egress point on a separate line. Use the same Company Name or ID for the Egress Point in Table 7-C that was used in Table 7-A. See the line by line PTI instructions for additional information.

Table 7-C, Egress Point Additional Information (Add rows as necessary)			
Company ID or Name for the Egress Point	**Building Height (ft)**	**Building Width (ft)**	**Building Length (ft)**
COAL BUNKER 1	200	100	150

8. Request for Federally Enforceable Limits

As part of this permit application, do you wish to propose voluntary restrictions to limit emissions in order to avoid specific requirements listed below, (i.e., are you requesting federally enforceable limits to obtain synthetic minor status)?

☐ yes
☒ no
☐ not sure - please contact me if this affects me

If yes, why are you requesting federally enforceable limits? Check all that apply.

a. ☐ to avoid being a major source (see OAC rule 3745-77-01)
b. ☐ to avoid being a major MACT source (see OAC rule 3745-31-01)
c. ☐ to avoid being a major modification (see OAC rule 3745-31-01)
d. ☐ to avoid being a major stationary source (see OAC rule 3745-31-01)
e. ☐ to avoid an air dispersion modeling requirement (see Engineering Guide # 69)
f. ☐ to avoid another requirement. Describe: _____

If you checked a., b. or d., please attach a facility-wide potential to emit (PTE) analysis (for each pollutant) and synthetic minor strategy to this application. (See line by line instructions for definition of PTE.) If you checked c., please attach a net emission change analysis to this application.

9. If this air contaminant source utilizes any continuous emissions monitoring equipment for indicating or demonstrating compliance, complete the following table. This does not include continuous parametric monitoring systems.

Company ID for Egress Point	**Type of Monitor**	**Applicable performance specification (40 CFR 60, Appendix B)**	**Pollutant(s) Monitored**

10. Do you wish to permit this air contaminant source as a portable source, allowing relocation within the state in accordance with OAC rule 3745-31-03 or OAC rule 3745-31-05?

Section II - Specific Air Contaminant Source Information

☐ yes - Note: notification requirements in rules cited above must be followed.
☒ no

11. The appropriate Emissions Activity Category (EAC) form(s) must be completed and attached for each air contaminant source. At least one complete EAC form must be submitted for each air contaminant source for the application to be considered complete. Refer to the list attached to the PTI instructions.

Section II - Specific Air Contaminant Source Information

NOTE: One copy of this section should be filled out for each air contaminant source covered by this PTI application. See the line by line PTI instructions for additional information.

1. Company identification (name for air contaminant source for which you are applying): COAL BUNKER 2

2. List all equipment that are part of this air contaminant source: COAL BUNKER 2

3. Air Contaminant Source Installation or Modification Schedule (must be completed regardless of date of installation or modification):

   When did/will you begin to install or modify the air contaminant source? (month/year) SECOND QUARTER 2008

   When did/will you begin to operate the air contaminant source? (month/year) THIRD QUARTER 2011 **OR** after issuance of PTI _____

4. Emissions Information: The following table requests information needed to determine the applicable requirements and the compliance status of this air contaminant source with those requirements. Suggestions for how to estimate emissions may be found in the instructions to the Emissions Activity Category (EAC) forms required with this application. If you need further assistance, contact your Ohio EPA permit representative.

   - If total potential emissions of HAPs or any Air Toxic is greater than 1 ton/yr, fill in the table for that (those) pollutant(s). For all other pollutants, if "Emissions before controls (max), lb/hr" multiplied by 24 hours/day is greater than 10 lb/day, fill in the table for that pollutant.
   - If you have no add-on control equipment, "Emissions before controls= will be the same as "Actual emissions"
   - Annual emissions should be based on operating 8760 hr/yr unless you are requesting operating restrictions to limit emissions in line # 8 or have described inherent limitations below.
   - If you use units other than lb/hr or ton/yr, specify the units used (e.g., gr/dscf, lb/ton charged, lb/MMBtu, ton/12-months).
   - Requested Allowable (ton/yr) is often equivalent to Potential to Emit (PTE) as defined in OAC rule 3745-31-01 and OAC rule 3745-77-01.

Pollutant	Emissions before controls (max) (lb/hr)	Actual emissions (lb/hr)	Actual emissions (ton/year)	Requested Allowable (lb/hr)	Requested Allowable (ton/year)
Particulate emissions (PE) (formerly particulate matter, PM)	40	0.43	1.9	0.43	1.9
PM_{10} (PM < 10 microns in diameter)	40	0.43	1.9	0.43	1.9
Sulfur dioxide (SO_2)	0	0	0	0	0
Nitrogen oxides (NO_x)	0	0	0	0	0
Carbon monoxide (CO)	0	0	0	0	0
Organic compounds (OC)	0	0	0	0	0
Volatile organic compounds (VOC)	0	0	0	0	0
Total HAPs	0	0	0	0	0
Highest single HAP:	0	0	0	0	0
Air Toxics (see instructions):	0	0	0	0	0

Provide your calculations as an attachment and explain how all process variables and emission factors were selected. Note the emissions factor(s) employed and document the origin. Example: AP-42, Table 4.4-3 (8/97); stack test, Method 5, 4/96; mass balance based on MSDS; etc.

Section II - Specific Air Contaminant Source Information

5. **Does this air contaminant source employ emissions control equipment?**

☒ **Yes** - fill out the applicable information below.

☐ **No** - proceed to item # 6.

Note: Pollutant abbreviations used below: Particulates = PE; Organic compounds = OC; Sulfur dioxide = SO_2; Nitrogen oxides = NOx; Carbon monoxide = CO

☐ **Cyclone/Multiclone**
Manufacturer: _____ Year installed: _____
What do you call this control equipment: _____
Pollutant(s) controlled: ☐ PE ☐ OC ☐ SO_2 ☐ NOx ☐ CO ☐ Other _____
Estimated capture efficiency (%): _____ Basis for efficiency: _____
Design control efficiency (%): _____ Basis for efficiency: _____
Type: ☐ Cyclone ☐ Multiclone ☐ Rotoclone ☐ Other _____
☐ This is the only control equipment on this air contaminant source
If no, this control equipment is: ☐ Primary ☐ Secondary ☐ Parallel
List any other air contaminant sources that are also vented to this control equipment:
_____

☒ **Fabric Filter/Baghouse**
Manufacturer: TO BE DETERMINED Year installed: NEW FACILITY
What do you call this control equipment: BUNKER FILTER 2
Pollutant(s) controlled: ☒ PE ☐ OC ☐ SO_2 ☐ NOx ☐ CO ☐ Other _____
Estimated capture efficiency (%):100 Basis for efficiency: ENGINEERING DESIGN
Design control efficiency (%):99.9 Basis for efficiency: LITERATURE
Operating pressure drop range (inches of water): Minimum: 3 Maximum: 6
Pressure type: ☐ Negative pressure ☒ Positive pressure
Fabric cleaning mechanism: ☐ Reverse air ☒ Pulse jet ☐ Shaker ☐ Other _____
☐ Lime injection or fabric coating agent used: Type: _____ Feed rate: _____
☒ This is the only control equipment on this air contaminant source
If no, this control equipment is: ☐ Primary ☐ Secondary ☐ Parallel
List any other air contaminant sources that are also vented to this control equipment:
_____

☐ **Wet Scrubber**
Manufacturer: _____ Year installed: _____
What do you call this control equipment: _____
Pollutant(s) controlled: ☐ PE ☐ OC ☐ SO_2 ☐ NOx ☐ CO ☐ Other _____
Estimated capture efficiency (%): _____ Basis for efficiency: _____
Design control efficiency (%): _____ Basis for efficiency: _____
Type: ☐ Spray chamber ☐ Packed bed ☐ Impingement ☐ Venturi ☐ Other _____
Operating pressure drop range (inches of water): Minimum: _____ Maximum: _____
pH range for scrubbing liquid: Minimum: _____ Maximum: _____
Scrubbing liquid flow rate (gal/min): _____
Is scrubber liquid recirculated? ☐ Yes ☐ No
Water supply pressure (psig): _____ NOTE: This item for spray chambers only.
☐ This is the only control equipment on this air contaminant source
If no, this control equipment is: ☐ Primary ☐ Secondary ☐ Parallel
List any other air contaminant sources that are also vented to this control equipment:
_____

☐ **Electrostatic Precipitator**
Manufacturer: _____ Year installed: _____
What do you call this control equipment: _____
Pollutant(s) controlled: ☐ PE ☐ OC ☐ SO_2 ☐ NOx ☐ CO ☐ Other _____
Estimated capture efficiency (%): _____ Basis for efficiency: _____
Design control efficiency (%): _____ Basis for efficiency: _____

Section II - Specific Air Contaminant Source Information

Type: ☐ Plate-wire ☐ Flat-plate ☐ Tubular ☐ Wet ☐ Other _____
Number of operating fields: _____

☐ This is the only control equipment on this air contaminant source
If no, this control equipment is: ☐ Primary ☐ Secondary ☐ Parallel
List any other air contaminant sources that are also vented to this control equipment:
_____

☐ **Concentrator**
Manufacturer: _____ Year installed: _____
What do you call this control equipment: _____
Pollutant(s) controlled: ☐ PE ☐ OC ☐ SO_2 ☐ NOx ☐ CO ☐ Other _____
Estimated capture efficiency (%): _____ Basis for efficiency: _____
Design regeneration cycle time (minutes): _____
Minimum desorption air stream temperature (°F): _____
Rotational rate (revolutions/hour): _____
☐ This is the only control equipment on this air contaminant source
If no, this control equipment is: ☐ Primary ☐ Secondary ☐ Parallel
List any other air contaminant sources that are also vented to this control equipment:
_____

☐ **Catalytic Incinerator**
Manufacturer: _____ Year installed: _____
What do you call this control equipment: _____
Pollutant(s) controlled: ☐ PE ☐ OC ☐ SO_2 ☐ NOx ☐ CO ☐ Other _____
Estimated capture efficiency (%): _____ Basis for efficiency: _____
Design control efficiency (%): _____ Basis for efficiency: _____
Minimum inlet gas temperature (°F): _____
Combustion chamber residence time (seconds): _____
Minimum temperature difference (°F) across catalyst during air contaminant source operation: _____
☐ This is the only control equipment on this air contaminant source
If no, this control equipment is: ☐ Primary ☐ Secondary ☐ Parallel
List any other air contaminant sources that are also vented to this control equipment:
_____

☐ **Thermal Incinerator/Thermal Oxidizer**
Manufacturer: _____ Year installed: _____
What do you call this control equipment: _____
Pollutant(s) controlled: ☐ PE ☐ OC ☐ SO_2 ☐ NOx ☐ CO ☐ Other _____
Estimated capture efficiency (%): _____ Basis for efficiency: _____
Design control efficiency (%): _____ Basis for efficiency: _____
Minimum operating temperature (°F) and location: _____ (See line by line instructions.)
Combustion chamber residence time (seconds): _____
☐ This is the only control equipment on this air contaminant source
If no, this control equipment is: ☐ Primary ☐ Secondary ☐ Parallel
List any other air contaminant sources that are also vented to this control equipment:
_____

☐ **Flare**
Manufacturer: _____ Year installed: _____
What do you call this control equipment: _____
Pollutant(s) controlled: ☐ PE ☐ OC ☐ SO_2 ☐ NOx ☐ CO ☐ Other _____
Estimated capture efficiency (%): _____ Basis for efficiency: _____
Design control efficiency (%): _____ Basis for efficiency: _____
Type: ☐ Enclosed ☐ Elevated (open)
Ignition device: ☐ Electric arc ☐ Pilot flame
Flame presence sensor: ☐ Yes ☐ No
☐ This is the only control equipment on this air contaminant source
If no, this control equipment is: ☐ Primary ☐ Secondary ☐ Parallel
List any other air contaminant sources that are also vented to this control equipment:

Section II - Specific Air Contaminant Source Information

☐ **Condenser**

Manufacturer: _____ Year installed: _____
What do you call this control equipment: _____
Pollutant(s) controlled: ☐ PE ☐ OC ☐ SO_2 ☐ NOx ☐ CO ☐ Other _____
Estimated capture efficiency (%):_____ Basis for efficiency: _____
Design control efficiency (%):_____ Basis for efficiency: _____

Type: ☐ Indirect contact ☐ Direct contact
Maximum exhaust gas temperature (°F) during air contaminant source operation: _____
Coolant type: _____
Design coolant temperature (°F): Minimum _____ Maximum _____
Design coolant flow rate (gpm): _____
☐ This is the only control equipment on this air contaminant source
If no, this control equipment is: ☐ Primary ☐ Secondary ☐ Parallel
List any other air contaminant sources that are also vented to this control equipment:
_____

☐ **Carbon Absorber**

Manufacturer: _____ Year installed: _____
What do you call this control equipment: _____
Pollutant(s) controlled: ☐ PE ☐ OC ☐ SO_2 ☐ NOx ☐ CO ☐ Other _____
Estimated capture efficiency (%):_____ Basis for efficiency: _____
Design control efficiency (%):_____ Basis for efficiency: _____
Type: ☐ On-site regenerative ☐ Disposable
Maximum design outlet organic compound concentration (ppmv): _____
Carbon replacement frequency or regeneration cycle time (specify units): _____
Maximum temperature of the carbon bed, after regeneration (including any cooling cycle): _____
☐ This is the only control equipment on this air contaminant source
If no, this control equipment is: ☐ Primary ☐ Secondary ☐ Parallel
List any other air contaminant sources that are also vented to this control equipment:
_____

☐ **Dry Scrubber**

Manufacturer: _____ Year installed: _____
What do you call this control equipment: _____
Pollutant(s) controlled: ☐ PE ☐ OC ☐ SO_2 ☐ NOx ☐ CO ☐ Other _____
Estimated capture efficiency (%):_____ Basis for efficiency: _____
Design control efficiency (%):_____ Basis for efficiency: _____
Reagent(s) used: Type: _____ Injection rate(s): _____
Operating pressure drop range (inches of water): Minimum: _____ Maximum: _____
☐ This is the only control equipment on this air contaminant source
If no, this control equipment is: ☐ Primary ☐ Secondary ☐ Parallel
List any other air contaminant sources that are also vented to this control equipment:
_____

☐ **Paint booth filter**

Type: ☐ Paper ☐ Fiberglass ☐ Water curtain ☐ Other _____
Design control efficiency (%):_____ Basis for efficiency: _____

☐ **Other**, describe _____

Manufacturer: _____ Year installed: _____
What do you call this control equipment: _____
Pollutant(s) controlled: ☐ PE ☐ OC ☐ SO_2 ☐ NOx ☐ CO ☐ Other
Estimated capture efficiency (%): _____ Basis for efficiency: _____

Design control efficiency (%):_____ Basis for efficiency: _____
☐ This is the only control equipment on this air contaminant source
If no, this control equipment is: ☐ Primary ☐ Secondary ☐ Parallel

Section II - Specific Air Contaminant Source Information

List any other air contaminant sources that are also vented to this control equipment:

_____

6. Attach a Process or Activity Flow Diagram to this application for each air contaminant source included in the application. The diagram should indicate their relationships to one another. See the line by line PTI instructions for additional information.

7. Emissions egress point(s) information: PTIs which allow total emissions in excess of the thresholds listed below will be subject to an air quality modeling analysis. This analysis is to assure that the impact from the requested project will not exceed Ohio=s Acceptable Incremental Impacts for criteria pollutants and/or Maximum Allowable Ground Level Concentrations (MAGLC) for air toxics. Permit requests that would have unacceptable impacts can not be approved as proposed. See the line by line PTI instructions for additional information.

   Complete the tables below if the requested allowable annual emission rate for this PTI exceeds any of the following:

   - Particulate Matter (PM10): 10 tons per year
   - Sulfur Dioxide (SO2): 25 tons per year
   - Nitrogen Oxides (NOx): 25 tons per year
   - Carbon Monoxide (CO): 100 tons per year
   - Air Toxic: 1 ton per year. An air toxic is any air pollutant for which the American Council of Governmental Industrial Hygienists (ACGIH) has established a Threshold Limit Value (TLV).

   Complete Table 7-A below for each stack emissions egress point. An egress point is a point at which emissions from an air contaminant source are released into the ambient (outside) air. List each individual egress point on a separate line.

Table 7-A, Stack Egress Point Information

Company Name or ID for the Egress Point (examples: Stack A; Boiler Stack; etc.)	Type Code*	Stack Egress Point Shape and Dimensions (in)(examples: round 10 inch ID; rectangular 14 X 16 inches; etc.)	Stack Egress Point Height from the Ground (ft)	Stack Temp. at Max. Capacity (F)	Stack Flow Rate at Max. Capacity (ACFM)	Minimum Distance to the Property Line (ft)
COAL BUNKER 2	A	RECT. 2 FT X 3 FT	250	68	10,000	1,000

*Type codes for stack egress points:

A. vertical stack (unobstructed): There are no obstructions to upward flow in or on the stack such as a rain cap.
B. vertical stack (obstructed): There are obstructions to the upward flow, such as a rain cap, which prevents or inhibits the air flow in a vertical direction.
C. non-vertical stack: The stack directs the air flow in a direction which is not directly upward.

Complete Table 7-B below for each fugitive emissions egress point. List each individual egress point on a separate line. Refer to the description of the fugitive egress point type codes below the table for use in completing the type code column of the table. For air contaminant sources like roadways and storage piles, only the first 5 columns need to be completed. For an air contaminant source with multiple fugitive emissions egress points, include only the primary egress points.

Table 7-B, Fugitive Egress Point Information

Company ID for the Egress Point (examples; Garage Door B, Building C; Roof Monitor; etc.)	Type Code*	Egress Point Description (examples: garage door, 12 X 30 feet, west wall; outside gravel storage piles; etc.)	Fugitive Egress Point Height from the Ground (ft)	Minimum Distance to the Property Line (ft)	Exit Gas Temp. (F)

Section II - Specific Air Contaminant Source Information

*Type codes for fugitive egress point:

D. door or window
E. other opening in the building without a duct
F. no stack and no building enclosing the air contaminant source (e.g., roadways)

Complete Table 7-C below for each Stack Egress Point identified in Table 7-A above. In each case, use the dimensions of the largest nearby building, building segment or structure. List each individual egress point on a separate line. Use the same Company Name or ID for the Egress Point in Table 7-C that was used in Table 7-A. See the line by line PTI instructions for additional information.

Table 7-C, Egress Point Additional Information (Add rows as necessary)

Company ID or Name for the Egress Point	Building Height (ft)	Building Width (ft)	Building Length (ft)
COAL BUNKER 2	200	100	150

8. Request for Federally Enforceable Limits

As part of this permit application, do you wish to propose voluntary restrictions to limit emissions in order to avoid specific requirements listed below, (i.e., are you requesting federally enforceable limits to obtain synthetic minor status)?

☐ yes
☒ no
☐ not sure - please contact me if this affects me

If yes, why are you requesting federally enforceable limits? Check all that apply.

a. ☐ to avoid being a major source (see OAC rule 3745-77-01)
b. ☐ to avoid being a major MACT source (see OAC rule 3745-31-01)
c. ☐ to avoid being a major modification (see OAC rule 3745-31-01)
d. ☐ to avoid being a major stationary source (see OAC rule 3745-31-01)
e. ☐ to avoid an air dispersion modeling requirement (see Engineering Guide # 69)
f. ☐ to avoid another requirement. Describe: _____

If you checked a., b. or d., please attach a facility-wide potential to emit (PTE) analysis (for each pollutant) and synthetic minor strategy to this application. (See line by line instructions for definition of PTE.) If you checked c., please attach a net emission change analysis to this application.

9. If this air contaminant source utilizes any continuous emissions monitoring equipment for indicating or demonstrating compliance, complete the following table. This does not include continuous parametric monitoring systems.

Company ID for Egress Point	Type of Monitor	Applicable performance specification (40 CFR 60, Appendix B)	Pollutant(s) Monitored

10. Do you wish to permit this air contaminant source as a portable source, allowing relocation within the state in accordance with OAC rule 3745-31-03 or OAC rule 3745-31-05?

Section II - Specific Air Contaminant Source Information

☐ yes - Note: notification requirements in rules cited above must be followed.
☒ no

11. The appropriate Emissions Activity Category (EAC) form(s) must be completed and attached for each air contaminant source. At least one complete EAC form must be submitted for each air contaminant source for the application to be considered complete. Refer to the list attached to the PTI instructions.

Section II - Specific Air Contaminant Source Information

NOTE: One copy of this section should be filled out for each air contaminant source covered by this PTI application. See the line by line PTI instructions for additional information.

1. Company identification (name for air contaminant source for which you are applying): COAL BUNKER 3

2. List all equipment that are part of this air contaminant source: COAL BUNKER 3

3. Air Contaminant Source Installation or Modification Schedule (must be completed regardless of date of installation or modification):

   When did/will you begin to install or modify the air contaminant source? (month/year) SECOND QUARTER 2008

   When did/will you begin to operate the air contaminant source? (month/year) THIRD QUARTER 2011 **OR** after issuance of PTI _____

4. Emissions Information: The following table requests information needed to determine the applicable requirements and the compliance status of this air contaminant source with those requirements. Suggestions for how to estimate emissions may be found in the instructions to the Emissions Activity Category (EAC) forms required with this application. If you need further assistance, contact your Ohio EPA permit representative.

   - If total potential emissions of HAPs or any Air Toxic is greater than 1 ton/yr, fill in the table for that (those) pollutant(s). For all other pollutants, if "Emissions before controls (max), lb/hr" multiplied by 24 hours/day is greater than 10 lb/day, fill in the table for that pollutant.
   - If you have no add-on control equipment, "Emissions before controls= will be the same as "Actual emissions"
   - Annual emissions should be based on operating 8760 hr/yr unless you are requesting operating restrictions to limit emissions in line # 8 or have described inherent limitations below.
   - If you use units other than lb/hr or ton/yr, specify the units used (e.g., gr/dscf, lb/ton charged, lb/MMBtu, ton/12-months).
   - Requested Allowable (ton/yr) is often equivalent to Potential to Emit (PTE) as defined in OAC rule 3745-31-01 and OAC rule 3745-77-01.

Pollutant	Emissions before controls (max) (lb/hr)	Actual emissions (lb/hr)	Actual emissions (ton/year)	Requested Allowable (lb/hr)	Requested Allowable (ton/year)
Particulate emissions (PE) (formerly particulate matter, PM)	40	0.43	1.9	0.43	1.9
PM_{10} (PM < 10 microns in diameter)	40	0.43	1.9	0.43	1.9
Sulfur dioxide (SO_2)	0	0	0	0	0
Nitrogen oxides (NO_x)	0	0	0	0	0
Carbon monoxide (CO)	0	0	0	0	0
Organic compounds (OC)	0	0	0	0	0
Volatile organic compounds (VOC)	0	0	0	0	0
Total HAPs	0	0	0	0	0
Highest single HAP:	0	0	0	0	0
Air Toxics (see instructions):	0	0	0	0	0

Provide your calculations as an attachment and explain how all process variables and emission factors were selected. Note the emissions factor(s) employed and document the origin. Example: AP-42, Table 4.4-3 (8/97); stack test, Method 5, 4/96; mass balance based on MSDS; etc.

Section II - Specific Air Contaminant Source Information

5. **Does this air contaminant source employ emissions control equipment?**

☒ **Yes** - fill out the applicable information below.

☐ **No** - proceed to item # 6.

Note: Pollutant abbreviations used below: Particulates = PE; Organic compounds = OC; Sulfur dioxide = SO_2; Nitrogen oxides = NOx; Carbon monoxide = CO

☐ **Cyclone/Multiclone**
Manufacturer: _____ Year installed: _____
What do you call this control equipment: _____
Pollutant(s) controlled: ☐ PE ☐ OC ☐ SO_2 ☐ NOx ☐ CO ☐ Other _____
Estimated capture efficiency (%): _____ Basis for efficiency: _____
Design control efficiency (%): _____ Basis for efficiency: _____
Type: ☐ Cyclone ☐ Multiclone ☐ Rotoclone ☐ Other _____
☐ This is the only control equipment on this air contaminant source
If no, this control equipment is: ☐ Primary ☐ Secondary ☐ Parallel
List any other air contaminant sources that are also vented to this control equipment:
_____

☒ **Fabric Filter/Baghouse**
Manufacturer: TO BE DETERMINED Year installed: NEW FACILITY
What do you call this control equipment: BUNKER FILTER 3
Pollutant(s) controlled: ☒ PE ☐ OC ☐ SO_2 ☐ NOx ☐ CO ☐ Other _____
Estimated capture efficiency (%):100 Basis for efficiency: ENGINEERING DESIGN
Design control efficiency (%):99.9 Basis for efficiency: LITERATURE
Operating pressure drop range (inches of water): Minimum: 3 Maximum: 6
Pressure type: ☐ Negative pressure ☒ Positive pressure
Fabric cleaning mechanism: ☐ Reverse air ☒ Pulse jet ☐ Shaker ☐ Other _____
☐ Lime injection or fabric coating agent used: Type: _____ Feed rate: _____
☒ This is the only control equipment on this air contaminant source
If no, this control equipment is: ☐ Primary ☐ Secondary ☐ Parallel
List any other air contaminant sources that are also vented to this control equipment:
_____

☐ **Wet Scrubber**
Manufacturer: _____ Year installed: _____
What do you call this control equipment: _____
Pollutant(s) controlled: ☐ PE ☐ OC ☐ SO_2 ☐ NOx ☐ CO ☐ Other _____
Estimated capture efficiency (%): _____ Basis for efficiency: _____
Design control efficiency (%): _____ Basis for efficiency: _____
Type: ☐ Spray chamber ☐ Packed bed ☐ Impingement ☐ Venturi ☐ Other _____
Operating pressure drop range (inches of water): Minimum: _____ Maximum: _____
pH range for scrubbing liquid: Minimum: _____ Maximum: _____
Scrubbing liquid flow rate (gal/min): _____
Is scrubber liquid recirculated? ☐ Yes ☐ No
Water supply pressure (psig): _____ NOTE: This item for spray chambers only.
☐ This is the only control equipment on this air contaminant source
If no, this control equipment is: ☐ Primary ☐ Secondary ☐ Parallel
List any other air contaminant sources that are also vented to this control equipment:
_____

☐ **Electrostatic Precipitator**
Manufacturer: _____ Year installed: _____
What do you call this control equipment: _____
Pollutant(s) controlled: ☐ PE ☐ OC ☐ SO_2 ☐ NOx ☐ CO ☐ Other _____
Estimated capture efficiency (%): _____ Basis for efficiency: _____
Design control efficiency (%): _____ Basis for efficiency: _____

Section II - Specific Air Contaminant Source Information

Type: ☐ Plate-wire ☐ Flat-plate ☐ Tubular ☐ Wet ☐ Other _____
Number of operating fields: _____

☐ This is the only control equipment on this air contaminant source
If no, this control equipment is: ☐ Primary ☐ Secondary ☐ Parallel
List any other air contaminant sources that are also vented to this control equipment:
_____

☐ **Concentrator**
Manufacturer: _____ Year installed: _____
What do you call this control equipment: _____
Pollutant(s) controlled: ☐ PE ☐ OC ☐ SO_2 ☐ NOx ☐ CO ☐ Other _____
Estimated capture efficiency (%):_____ Basis for efficiency: _____
Design regeneration cycle time (minutes): _____
Minimum desorption air stream temperature (°F): _____
Rotational rate (revolutions/hour): _____
☐ This is the only control equipment on this air contaminant source
If no, this control equipment is: ☐ Primary ☐ Secondary ☐ Parallel
List any other air contaminant sources that are also vented to this control equipment:
_____

☐ **Catalytic Incinerator**
Manufacturer: _____ Year installed: _____
What do you call this control equipment: _____
Pollutant(s) controlled: ☐ PE ☐ OC ☐ SO_2 ☐ NOx ☐ CO ☐ Other _____
Estimated capture efficiency (%):_____ Basis for efficiency: _____
Design control efficiency (%):_____ Basis for efficiency: _____
Minimum inlet gas temperature (°F): _____
Combustion chamber residence time (seconds): _____
Minimum temperature difference (°F) across catalyst during air contaminant source operation: _____
☐ This is the only control equipment on this air contaminant source
If no, this control equipment is: ☐ Primary ☐ Secondary ☐ Parallel
List any other air contaminant sources that are also vented to this control equipment:
_____

☐ **Thermal Incinerator/Thermal Oxidizer**
Manufacturer: _____ Year installed: _____
What do you call this control equipment: _____
Pollutant(s) controlled: ☐ PE ☐ OC ☐ SO_2 ☐ NOx ☐ CO ☐ Other _____
Estimated capture efficiency (%):_____ Basis for efficiency: _____
Design control efficiency (%):_____ Basis for efficiency: _____
Minimum operating temperature (°F) and location: _____ (See line by line instructions.)
Combustion chamber residence time (seconds): _____
☐ This is the only control equipment on this air contaminant source
If no, this control equipment is: ☐ Primary ☐ Secondary ☐ Parallel
List any other air contaminant sources that are also vented to this control equipment:
_____

☐ **Flare**
Manufacturer: _____ Year installed: _____
What do you call this control equipment: _____
Pollutant(s) controlled: ☐ PE ☐ OC ☐ SO_2 ☐ NOx ☐ CO ☐ Other _____
Estimated capture efficiency (%):_____ Basis for efficiency: _____
Design control efficiency (%):_____ Basis for efficiency: _____
Type: ☐ Enclosed ☐ Elevated (open)
Ignition device: ☐ Electric arc ☐ Pilot flame
Flame presence sensor: ☐ Yes ☐ No
☐ This is the only control equipment on this air contaminant source
If no, this control equipment is: ☐ Primary ☐ Secondary ☐ Parallel
List any other air contaminant sources that are also vented to this control equipment:

Section II - Specific Air Contaminant Source Information

☐ **Condenser**

Manufacturer: _____ Year installed: _____
What do you call this control equipment: _____
Pollutant(s) controlled: ☐ PE ☐ OC ☐ SO_2 ☐ NOx ☐ CO ☐ Other _____
Estimated capture efficiency (%):_____ Basis for efficiency: _____
Design control efficiency (%):_____ Basis for efficiency: _____

Type: ☐ Indirect contact ☐ Direct contact
Maximum exhaust gas temperature (°F) during air contaminant source operation: _____
Coolant type: _____
Design coolant temperature (°F): Minimum _____ Maximum _____
Design coolant flow rate (gpm): _____
☐ This is the only control equipment on this air contaminant source
If no, this control equipment is: ☐ Primary ☐ Secondary ☐ Parallel
List any other air contaminant sources that are also vented to this control equipment:
_____

☐ **Carbon Absorber**

Manufacturer: _____ Year installed: _____
What do you call this control equipment: _____
Pollutant(s) controlled: ☐ PE ☐ OC ☐ SO_2 ☐ NOx ☐ CO ☐ Other _____
Estimated capture efficiency (%):_____ Basis for efficiency: _____
Design control efficiency (%):_____ Basis for efficiency: _____
Type: ☐ On-site regenerative ☐ Disposable
Maximum design outlet organic compound concentration (ppmv): _____
Carbon replacement frequency or regeneration cycle time (specify units): _____
Maximum temperature of the carbon bed, after regeneration (including any cooling cycle): _____
☐ This is the only control equipment on this air contaminant source
If no, this control equipment is: ☐ Primary ☐ Secondary ☐ Parallel
List any other air contaminant sources that are also vented to this control equipment:
_____

☐ **Dry Scrubber**

Manufacturer: _____ Year installed: _____
What do you call this control equipment: _____
Pollutant(s) controlled: ☐ PE ☐ OC ☐ SO_2 ☐ NOx ☐ CO ☐ Other _____
Estimated capture efficiency (%):_____ Basis for efficiency: _____
Design control efficiency (%):_____ Basis for efficiency: _____
Reagent(s) used: Type: _____ Injection rate(s): _____
Operating pressure drop range (inches of water): Minimum: _____ Maximum: _____
☐ This is the only control equipment on this air contaminant source
If no, this control equipment is: ☐ Primary ☐ Secondary ☐ Parallel
List any other air contaminant sources that are also vented to this control equipment:
_____

☐ **Paint booth filter**

Type: ☐ Paper ☐ Fiberglass ☐ Water curtain ☐ Other _____
Design control efficiency (%):_____ Basis for efficiency: _____

☐ **Other**, describe _____

Manufacturer: _____ Year installed: _____
What do you call this control equipment: _____
Pollutant(s) controlled: ☐ PE ☐ OC ☐ SO_2 ☐ NOx ☐ CO ☐ Other
Estimated capture efficiency (%): _____ Basis for efficiency: _____

Design control efficiency (%):_____ Basis for efficiency: _____
☐ This is the only control equipment on this air contaminant source
If no, this control equipment is: ☐ Primary ☐ Secondary ☐ Parallel

Section II - Specific Air Contaminant Source Information

List any other air contaminant sources that are also vented to this control equipment:

6. Attach a Process or Activity Flow Diagram to this application for each air contaminant source included in the application. The diagram should indicate their relationships to one another. See the line by line PTI instructions for additional information.

7. Emissions egress point(s) information: PTIs which allow total emissions in excess of the thresholds listed below will be subject to an air quality modeling analysis. This analysis is to assure that the impact from the requested project will not exceed Ohio=s Acceptable Incremental Impacts for criteria pollutants and/or Maximum Allowable Ground Level Concentrations (MAGLC) for air toxics. Permit requests that would have unacceptable impacts can not be approved as proposed. See the line by line PTI instructions for additional information.

   Complete the tables below if the requested allowable annual emission rate for this PTI exceeds any of the following:

   - Particulate Matter (PM10): 10 tons per year
   - Sulfur Dioxide (SO2): 25 tons per year
   - Nitrogen Oxides (NOx): 25 tons per year
   - Carbon Monoxide (CO): 100 tons per year
   - Air Toxic: 1 ton per year. An air toxic is any air pollutant for which the American Council of Governmental Industrial Hygienists (ACGIH) has established a Threshold Limit Value (TLV).

   Complete Table 7-A below for each stack emissions egress point. An egress point is a point at which emissions from an air contaminant source are released into the ambient (outside) air. List each individual egress point on a separate line.

Table 7-A, Stack Egress Point Information

Company Name or ID for the Egress Point (examples: Stack A; Boiler Stack; etc.)	Type Code*	Stack Egress Point Shape and Dimensions (in)(examples: round 10 inch ID; rectangular 14 X 16 inches; etc.)	Stack Egress Point Height from the Ground (ft)	Stack Temp. at Max. Capacity (F)	Stack Flow Rate at Max. Capacity (ACFM)	Minimum Distance to the Property Line (ft)
COAL BUNKER 3	A	RECT. 2 FT X 3 FT	250	68	10,000	1,000

*Type codes for stack egress points:

A. vertical stack (unobstructed): There are no obstructions to upward flow in or on the stack such as a rain cap.
B. vertical stack (obstructed): There are obstructions to the upward flow, such as a rain cap, which prevents or inhibits the air flow in a vertical direction.
C. non-vertical stack: The stack directs the air flow in a direction which is not directly upward.

Complete Table 7-B below for each fugitive emissions egress point. List each individual egress point on a separate line. Refer to the description of the fugitive egress point type codes below the table for use in completing the type code column of the table. For air contaminant sources like roadways and storage piles, only the first 5 columns need to be completed. For an air contaminant source with multiple fugitive emissions egress points, include only the primary egress points.

Table 7-B, Fugitive Egress Point Information

Company ID for the Egress Point (examples; Garage Door B, Building C; Roof Monitor; etc.)	Type Code*	Egress Point Description (examples: garage door, 12 X 30 feet, west wall; outside gravel storage piles; etc.)	Fugitive Egress Point Height from the Ground (ft)	Minimum Distance to the Property Line (ft)	Exit Gas Temp. (F)

Section II - Specific Air Contaminant Source Information

*Type codes for fugitive egress point:

D. door or window
E. other opening in the building without a duct
F. no stack and no building enclosing the air contaminant source (e.g., roadways)

Complete Table 7-C below for each Stack Egress Point identified in Table 7-A above. In each case, use the dimensions of the largest nearby building, building segment or structure. List each individual egress point on a separate line. Use the same Company Name or ID for the Egress Point in Table 7-C that was used in Table 7-A. See the line by line PTI instructions for additional information.

Table 7-C, Egress Point Additional Information (Add rows as necessary)			
Company ID or Name for the Egress Point	**Building Height (ft)**	**Building Width (ft)**	**Building Length (ft)**
COAL BUNKER 3	200	100	150

8. Request for Federally Enforceable Limits

As part of this permit application, do you wish to propose voluntary restrictions to limit emissions in order to avoid specific requirements listed below, (i.e., are you requesting federally enforceable limits to obtain synthetic minor status)?

☐ yes
☒ no
☐ not sure - please contact me if this affects me

If yes, why are you requesting federally enforceable limits? Check all that apply.

a. ☐ to avoid being a major source (see OAC rule 3745-77-01)
b. ☐ to avoid being a major MACT source (see OAC rule 3745-31-01)
c. ☐ to avoid being a major modification (see OAC rule 3745-31-01)
d. ☐ to avoid being a major stationary source (see OAC rule 3745-31-01)
e. ☐ to avoid an air dispersion modeling requirement (see Engineering Guide # 69)
f. ☐ to avoid another requirement. Describe: _____

If you checked a., b. or d., please attach a facility-wide potential to emit (PTE) analysis (for each pollutant) and synthetic minor strategy to this application. (See line by line instructions for definition of PTE.) If you checked c., please attach a net emission change analysis to this application.

9. If this air contaminant source utilizes any continuous emissions monitoring equipment for indicating or demonstrating compliance, complete the following table. This does not include continuous parametric monitoring systems.

Company ID for Egress Point	Type of Monitor	Applicable performance specification (40 CFR 60, Appendix B)	Pollutant(s) Monitored

10. Do you wish to permit this air contaminant source as a portable source, allowing relocation within the state in accordance with OAC rule 3745-31-03 or OAC rule 3745-31-05?

Section II - Specific Air Contaminant Source Information

☐ yes - Note: notification requirements in rules cited above must be followed.
☒ no

11. The appropriate Emissions Activity Category (EAC) form(s) must be completed and attached for each air contaminant source. At least one complete EAC form must be submitted for each air contaminant source for the application to be considered complete. Refer to the list attached to the PTI instructions.

Section II - Specific Air Contaminant Source Information

NOTE: One copy of this section should be filled out for each air contaminant source covered by this PTI application. See the line by line PTI instructions for additional information.

1. Company identification (name for air contaminant source for which you are applying): COAL BUNKER 4

2. List all equipment that are part of this air contaminant source: COAL BUNKER 4

3. Air Contaminant Source Installation or Modification Schedule (must be completed regardless of date of installation or modification):

   When did/will you begin to install or modify the air contaminant source? (month/year) SECOND QUARTER 2008

   When did/will you begin to operate the air contaminant source? (month/year) THIRD QUARTER 2011 **OR** after issuance of PTI _____

4. Emissions Information: The following table requests information needed to determine the applicable requirements and the compliance status of this air contaminant source with those requirements. Suggestions for how to estimate emissions may be found in the instructions to the Emissions Activity Category (EAC) forms required with this application. If you need further assistance, contact your Ohio EPA permit representative.

   - If total potential emissions of HAPs or any Air Toxic is greater than 1 ton/yr, fill in the table for that (those) pollutant(s). For all other pollutants, if "Emissions before controls (max), lb/hr" multiplied by 24 hours/day is greater than 10 lb/day, fill in the table for that pollutant.
   - If you have no add-on control equipment, "Emissions before controls= will be the same as "Actual emissions"
   - Annual emissions should be based on operating 8760 hr/yr unless you are requesting operating restrictions to limit emissions in line # 8 or have described inherent limitations below.
   - If you use units other than lb/hr or ton/yr, specify the units used (e.g., gr/dscf, lb/ton charged, lb/MMBtu, ton/12-months).
   - Requested Allowable (ton/yr) is often equivalent to Potential to Emit (PTE) as defined in OAC rule 3745-31-01 and OAC rule 3745-77-01.

Pollutant	Emissions before controls (max) (lb/hr)	Actual emissions (lb/hr)	Actual emissions (ton/year)	Requested Allowable (lb/hr)	Requested Allowable (ton/year)
Particulate emissions (PE) (formerly particulate matter, PM)	40	0.43	1.9	0.43	1.9
PM_{10} (PM < 10 microns in diameter)	40	0.43	1.9	0.43	1.9
Sulfur dioxide (SO_2)	0	0	0	0	0
Nitrogen oxides (NO_x)	0	0	0	0	0
Carbon monoxide (CO)	0	0	0	0	0
Organic compounds (OC)	0	0	0	0	0
Volatile organic compounds (VOC)	0	0	0	0	0
Total HAPs	0	0	0	0	0
Highest single HAP:	0	0	0	0	0
Air Toxics (see instructions):	0	0	0	0	0

Provide your calculations as an attachment and explain how all process variables and emission factors were selected. Note the emissions factor(s) employed and document the origin. Example: AP-42, Table 4.4-3 (8/97); stack test, Method 5, 4/96; mass balance based on MSDS; etc.

Section II - Specific Air Contaminant Source Information

5. **Does this air contaminant source employ emissions control equipment?**

☒ **Yes** - fill out the applicable information below.

☐ **No** - proceed to item # 6.

Note: Pollutant abbreviations used below: Particulates = PE; Organic compounds = OC; Sulfur dioxide = SO_2; Nitrogen oxides = NOx; Carbon monoxide = CO

☐ **Cyclone/Multiclone**

Manufacturer: _____ Year installed: _____
What do you call this control equipment: _____
Pollutant(s) controlled: ☐ PE ☐ OC ☐ SO_2 ☐ NOx ☐ CO ☐ Other _____
Estimated capture efficiency (%): _____ Basis for efficiency: _____
Design control efficiency (%): _____ Basis for efficiency: _____
Type: ☐ Cyclone ☐ Multiclone ☐ Rotoclone ☐ Other _____
☐ This is the only control equipment on this air contaminant source
If no, this control equipment is: ☐ Primary ☐ Secondary ☐ Parallel
List any other air contaminant sources that are also vented to this control equipment:
_____

☒ **Fabric Filter/Baghouse**

Manufacturer: TO BE DETERMINED Year installed: NEW FACILITY
What do you call this control equipment: BUNKER FILTER 4
Pollutant(s) controlled: ☒ PE ☐ OC ☐ SO_2 ☐ NOx ☐ CO ☐ Other _____
Estimated capture efficiency (%):100 Basis for efficiency: ENGINEERING DESIGN
Design control efficiency (%):99.9 Basis for efficiency: LITERATURE
Operating pressure drop range (inches of water): Minimum: 3 Maximum: 6
Pressure type: ☐ Negative pressure ☒ Positive pressure
Fabric cleaning mechanism: ☐ Reverse air ☒ Pulse jet ☐ Shaker ☐ Other _____
☐ Lime injection or fabric coating agent used: Type: _____ Feed rate: _____
☒ This is the only control equipment on this air contaminant source
If no, this control equipment is: ☐ Primary ☐ Secondary ☐ Parallel
List any other air contaminant sources that are also vented to this control equipment:
_____

☐ **Wet Scrubber**

Manufacturer: _____ Year installed: _____
What do you call this control equipment: _____
Pollutant(s) controlled: ☐ PE ☐ OC ☐ SO_2 ☐ NOx ☐ CO ☐ Other _____
Estimated capture efficiency (%): _____ Basis for efficiency: _____
Design control efficiency (%): _____ Basis for efficiency: _____
Type: ☐ Spray chamber ☐ Packed bed ☐ Impingement ☐ Venturi ☐ Other _____
Operating pressure drop range (inches of water): Minimum: _____ Maximum: _____
pH range for scrubbing liquid: Minimum: _____ Maximum: _____
Scrubbing liquid flow rate (gal/min): _____
Is scrubber liquid recirculated? ☐ Yes ☐ No
Water supply pressure (psig): _____ NOTE: This item for spray chambers only.
☐ This is the only control equipment on this air contaminant source
If no, this control equipment is: ☐ Primary ☐ Secondary ☐ Parallel
List any other air contaminant sources that are also vented to this control equipment:
_____

☐ **Electrostatic Precipitator**

Manufacturer: _____ Year installed: _____
What do you call this control equipment: _____
Pollutant(s) controlled: ☐ PE ☐ OC ☐ SO_2 ☐ NOx ☐ CO ☐ Other _____
Estimated capture efficiency (%): _____ Basis for efficiency: _____
Design control efficiency (%): _____ Basis for efficiency: _____

Section II - Specific Air Contaminant Source Information

Type: ☐ Plate-wire ☐ Flat-plate ☐ Tubular ☐ Wet ☐ Other _____
Number of operating fields: _____

☐ This is the only control equipment on this air contaminant source
If no, this control equipment is: ☐ Primary ☐ Secondary ☐ Parallel
List any other air contaminant sources that are also vented to this control equipment:
_____

☐ **Concentrator**
Manufacturer: _____ Year installed: _____
What do you call this control equipment: _____
Pollutant(s) controlled: ☐ PE ☐ OC ☐ SO_2 ☐ NOx ☐ CO ☐ Other _____
Estimated capture efficiency (%):_____ Basis for efficiency: _____
Design regeneration cycle time (minutes): _____
Minimum desorption air stream temperature (°F): _____
Rotational rate (revolutions/hour): _____
☐ This is the only control equipment on this air contaminant source
If no, this control equipment is: ☐ Primary ☐ Secondary ☐ Parallel
List any other air contaminant sources that are also vented to this control equipment:
_____

☐ **Catalytic Incinerator**
Manufacturer: _____ Year installed: _____
What do you call this control equipment: _____
Pollutant(s) controlled: ☐ PE ☐ OC ☐ SO_2 ☐ NOx ☐ CO ☐ Other _____
Estimated capture efficiency (%):_____ Basis for efficiency: _____
Design control efficiency (%):_____ Basis for efficiency: _____
Minimum inlet gas temperature (°F): _____
Combustion chamber residence time (seconds): _____
Minimum temperature difference (°F) across catalyst during air contaminant source operation: _____
☐ This is the only control equipment on this air contaminant source
If no, this control equipment is: ☐ Primary ☐ Secondary ☐ Parallel
List any other air contaminant sources that are also vented to this control equipment:
_____

☐ **Thermal Incinerator/Thermal Oxidizer**
Manufacturer: _____ Year installed: _____
What do you call this control equipment: _____
Pollutant(s) controlled: ☐ PE ☐ OC ☐ SO_2 ☐ NOx ☐ CO ☐ Other _____
Estimated capture efficiency (%):_____ Basis for efficiency: _____
Design control efficiency (%):_____ Basis for efficiency: _____
Minimum operating temperature (°F) and location: _____ (See line by line instructions.)
Combustion chamber residence time (seconds): _____
☐ This is the only control equipment on this air contaminant source
If no, this control equipment is: ☐ Primary ☐ Secondary ☐ Parallel
List any other air contaminant sources that are also vented to this control equipment:
_____

☐ **Flare**
Manufacturer: _____ Year installed: _____
What do you call this control equipment: _____
Pollutant(s) controlled: ☐ PE ☐ OC ☐ SO_2 ☐ NOx ☐ CO ☐ Other _____
Estimated capture efficiency (%):_____ Basis for efficiency: _____
Design control efficiency (%):_____ Basis for efficiency: _____
Type: ☐ Enclosed ☐ Elevated (open)
Ignition device: ☐ Electric arc ☐ Pilot flame
Flame presence sensor: ☐ Yes ☐ No
☐ This is the only control equipment on this air contaminant source
If no, this control equipment is: ☐ Primary ☐ Secondary ☐ Parallel
List any other air contaminant sources that are also vented to this control equipment:

Section II - Specific Air Contaminant Source Information

☐ **Condenser**
Manufacturer: _____ Year installed: _____
What do you call this control equipment: _____
Pollutant(s) controlled: ☐ PE ☐ OC ☐ SO_2 ☐ NOx ☐ CO ☐ Other _____
Estimated capture efficiency (%):_____ Basis for efficiency: _____
Design control efficiency (%):_____ Basis for efficiency: _____

Type: ☐ Indirect contact ☐ Direct contact
Maximum exhaust gas temperature (°F) during air contaminant source operation: _____
Coolant type: _____
Design coolant temperature (°F): Minimum _____ Maximum _____
Design coolant flow rate (gpm): _____
☐ This is the only control equipment on this air contaminant source
If no, this control equipment is: ☐ Primary ☐ Secondary ☐ Parallel
List any other air contaminant sources that are also vented to this control equipment:
_____

☐ **Carbon Absorber**
Manufacturer: _____ Year installed: _____
What do you call this control equipment: _____
Pollutant(s) controlled: ☐ PE ☐ OC ☐ SO_2 ☐ NOx ☐ CO ☐ Other _____
Estimated capture efficiency (%):_____ Basis for efficiency: _____
Design control efficiency (%):_____ Basis for efficiency: _____
Type: ☐ On-site regenerative ☐ Disposable
Maximum design outlet organic compound concentration (ppmv): _____
Carbon replacement frequency or regeneration cycle time (specify units): _____
Maximum temperature of the carbon bed, after regeneration (including any cooling cycle): _____
☐ This is the only control equipment on this air contaminant source
If no, this control equipment is: ☐ Primary ☐ Secondary ☐ Parallel
List any other air contaminant sources that are also vented to this control equipment:
_____

☐ **Dry Scrubber**
Manufacturer: _____ Year installed: _____
What do you call this control equipment: _____
Pollutant(s) controlled: ☐ PE ☐ OC ☐ SO_2 ☐ NOx ☐ CO ☐ Other _____
Estimated capture efficiency (%):_____ Basis for efficiency: _____
Design control efficiency (%):_____ Basis for efficiency: _____
Reagent(s) used: Type: _____ Injection rate(s): _____
Operating pressure drop range (inches of water): Minimum: _____ Maximum: _____
☐ This is the only control equipment on this air contaminant source
If no, this control equipment is: ☐ Primary ☐ Secondary ☐ Parallel
List any other air contaminant sources that are also vented to this control equipment:
_____

☐ **Paint booth filter**
Type: ☐ Paper ☐ Fiberglass ☐ Water curtain ☐ Other _____
Design control efficiency (%):_____ Basis for efficiency: _____

☐ **Other**, describe _____
Manufacturer: _____ Year installed: _____
What do you call this control equipment: _____
Pollutant(s) controlled: ☐ PE ☐ OC ☐ SO_2 ☐ NOx ☐ CO ☐ Other
Estimated capture efficiency (%): _____ Basis for efficiency: _____

Design control efficiency (%):_____ Basis for efficiency: _____
☐ This is the only control equipment on this air contaminant source
If no, this control equipment is: ☐ Primary ☐ Secondary ☐ Parallel

Section II - Specific Air Contaminant Source Information

List any other air contaminant sources that are also vented to this control equipment:

_____

6. Attach a Process or Activity Flow Diagram to this application for each air contaminant source included in the application. The diagram should indicate their relationships to one another. See the line by line PTI instructions for additional information.

7. Emissions egress point(s) information: PTIs which allow total emissions in excess of the thresholds listed below will be subject to an air quality modeling analysis. This analysis is to assure that the impact from the requested project will not exceed Ohio=s Acceptable Incremental Impacts for criteria pollutants and/or Maximum Allowable Ground Level Concentrations (MAGLC) for air toxics. Permit requests that would have unacceptable impacts can not be approved as proposed. See the line by line PTI instructions for additional information.

   Complete the tables below if the requested allowable annual emission rate for this PTI exceeds any of the following:

   - Particulate Matter (PM10): 10 tons per year
   - Sulfur Dioxide (SO2): 25 tons per year
   - Nitrogen Oxides (NOx): 25 tons per year
   - Carbon Monoxide (CO): 100 tons per year
   - Air Toxic: 1 ton per year. An air toxic is any air pollutant for which the American Council of Governmental Industrial Hygienists (ACGIH) has established a Threshold Limit Value (TLV).

   Complete Table 7-A below for each stack emissions egress point. An egress point is a point at which emissions from an air contaminant source are released into the ambient (outside) air. List each individual egress point on a separate line.

Table 7-A, Stack Egress Point Information

Company Name or ID for the Egress Point (examples: Stack A; Boiler Stack; etc.)	Type Code*	Stack Egress Point Shape and Dimensions (in)(examples: round 10 inch ID; rectangular 14 X 16 inches; etc.)	Stack Egress Point Height from the Ground (ft)	Stack Temp. at Max. Capacity (F)	Stack Flow Rate at Max. Capacity (ACFM)	Minimum Distance to the Property Line (ft)
COAL BUNKER 4	A	RECT. 2 FT X 3 FT	250	68	10,000	1,000

*Type codes for stack egress points:

A. vertical stack (unobstructed): There are no obstructions to upward flow in or on the stack such as a rain cap.
B. vertical stack (obstructed): There are obstructions to the upward flow, such as a rain cap, which prevents or inhibits the air flow in a vertical direction.
C. non-vertical stack: The stack directs the air flow in a direction which is not directly upward.

Complete Table 7-B below for each fugitive emissions egress point. List each individual egress point on a separate line. Refer to the description of the fugitive egress point type codes below the table for use in completing the type code column of the table. For air contaminant sources like roadways and storage piles, only the first 5 columns need to be completed. For an air contaminant source with multiple fugitive emissions egress points, include only the primary egress points.

Table 7-B, Fugitive Egress Point Information

Company ID for the Egress Point (examples; Garage Door B, Building C; Roof Monitor; etc.)	Type Code*	Egress Point Description (examples: garage door, 12 X 30 feet, west wall; outside gravel storage piles; etc.)	Fugitive Egress Point Height from the Ground (ft)	Minimum Distance to the Property Line (ft)	Exit Gas Temp. (F)

Section II - Specific Air Contaminant Source Information

*Type codes for fugitive egress point:

D. door or window
E. other opening in the building without a duct
F. no stack and no building enclosing the air contaminant source (e.g., roadways)

Complete Table 7-C below for each Stack Egress Point identified in Table 7-A above. In each case, use the dimensions of the largest nearby building, building segment or structure. List each individual egress point on a separate line. Use the same Company Name or ID for the Egress Point in Table 7-C that was used in Table 7-A. See the line by line PTI instructions for additional information.

Table 7-C, Egress Point Additional Information (Add rows as necessary)

Company ID or Name for the Egress Point	Building Height (ft)	Building Width (ft)	Building Length (ft)
COAL BUNKER 4	200	100	150

8. Request for Federally Enforceable Limits

As part of this permit application, do you wish to propose voluntary restrictions to limit emissions in order to avoid specific requirements listed below, (i.e., are you requesting federally enforceable limits to obtain synthetic minor status)?

☐ yes
☒ no
☐ not sure - please contact me if this affects me

If yes, why are you requesting federally enforceable limits? Check all that apply.

a. ☐ to avoid being a major source (see OAC rule 3745-77-01)
b. ☐ to avoid being a major MACT source (see OAC rule 3745-31-01)
c. ☐ to avoid being a major modification (see OAC rule 3745-31-01)
d. ☐ to avoid being a major stationary source (see OAC rule 3745-31-01)
e. ☐ to avoid an air dispersion modeling requirement (see Engineering Guide # 69)
f. ☐ to avoid another requirement. Describe: _____

If you checked a., b. or d., please attach a facility-wide potential to emit (PTE) analysis (for each pollutant) and synthetic minor strategy to this application. (See line by line instructions for definition of PTE.) If you checked c., please attach a net emission change analysis to this application.

9. If this air contaminant source utilizes any continuous emissions monitoring equipment for indicating or demonstrating compliance, complete the following table. This does not include continuous parametric monitoring systems.

Company ID for Egress Point	Type of Monitor	Applicable performance specification (40 CFR 60, Appendix B)	Pollutant(s) Monitored

10. Do you wish to permit this air contaminant source as a portable source, allowing relocation within the state in accordance with OAC rule 3745-31-03 or OAC rule 3745-31-05?

Section II - Specific Air Contaminant Source Information

☐ yes - Note: notification requirements in rules cited above must be followed.
☒ no

11. The appropriate Emissions Activity Category (EAC) form(s) must be completed and attached for each air contaminant source. At least one complete EAC form must be submitted for each air contaminant source for the application to be considered complete. Refer to the list attached to the PTI instructions.

Section II - Specific Air Contaminant Source Information

NOTE: One copy of this section should be filled out for each air contaminant source covered by this PTI application. See the line by line PTI instructions for additional information.

1. Company identification (name for air contaminant source for which you are applying): COAL BUNKER 5

2. List all equipment that are part of this air contaminant source: COAL BUNKER 5

3. Air Contaminant Source Installation or Modification Schedule (must be completed regardless of date of installation or modification):

   When did/will you begin to install or modify the air contaminant source? (month/year) SECOND QUARTER 2008

   When did/will you begin to operate the air contaminant source? (month/year) THIRD QUARTER 2011 **OR** after issuance of PTI _____

4. Emissions Information: The following table requests information needed to determine the applicable requirements and the compliance status of this air contaminant source with those requirements. Suggestions for how to estimate emissions may be found in the instructions to the Emissions Activity Category (EAC) forms required with this application. If you need further assistance, contact your Ohio EPA permit representative.

   - If total potential emissions of HAPs or any Air Toxic is greater than 1 ton/yr, fill in the table for that (those) pollutant(s). For all other pollutants, if "Emissions before controls (max), lb/hr" multiplied by 24 hours/day is greater than 10 lb/day, fill in the table for that pollutant.
   - If you have no add-on control equipment, "Emissions before controls= will be the same as "Actual emissions"
   - Annual emissions should be based on operating 8760 hr/yr unless you are requesting operating restrictions to limit emissions in line # 8 or have described inherent limitations below.
   - If you use units other than lb/hr or ton/yr, specify the units used (e.g., gr/dscf, lb/ton charged, lb/MMBtu, ton/12-months).
   - Requested Allowable (ton/yr) is often equivalent to Potential to Emit (PTE) as defined in OAC rule 3745-31-01 and OAC rule 3745-77-01.

Pollutant	Emissions before controls (max) (lb/hr)	Actual emissions (lb/hr)	Actual emissions (ton/year)	Requested Allowable (lb/hr)	Requested Allowable (ton/year)
Particulate emissions (PE) (formerly particulate matter, PM)	40	0.43	1.9	0.43	1.9
PM_{10} (PM < 10 microns in diameter)	40	0.43	1.9	0.43	1.9
Sulfur dioxide (SO_2)	0	0	0	0	0
Nitrogen oxides (NO_x)	0	0	0	0	0
Carbon monoxide (CO)	0	0	0	0	0
Organic compounds (OC)	0	0	0	0	0
Volatile organic compounds (VOC)	0	0	0	0	0
Total HAPs	0	0	0	0	0
Highest single HAP:	0	0	0	0	0
Air Toxics (see instructions):	0	0	0	0	0

Provide your calculations as an attachment and explain how all process variables and emission factors were selected. Note the emissions factor(s) employed and document the origin. Example: AP-42, Table 4.4-3 (8/97); stack test, Method 5, 4/96; mass balance based on MSDS; etc.

Section II - Specific Air Contaminant Source Information

5. **Does this air contaminant source employ emissions control equipment?**

☒ **Yes** - fill out the applicable information below.

☐ **No** - proceed to item # 6.

Note: Pollutant abbreviations used below: Particulates = PE; Organic compounds = OC; Sulfur dioxide = SO_2; Nitrogen oxides = NOx; Carbon monoxide = CO

☐ **Cyclone/Multiclone**
Manufacturer: _____ Year installed: _____
What do you call this control equipment: _____
Pollutant(s) controlled: ☐ PE ☐ OC ☐ SO_2 ☐ NOx ☐ CO ☐ Other _____
Estimated capture efficiency (%): _____ Basis for efficiency: _____
Design control efficiency (%): _____ Basis for efficiency: _____
Type: ☐ Cyclone ☐ Multiclone ☐ Rotoclone ☐ Other _____
☐ This is the only control equipment on this air contaminant source
If no, this control equipment is: ☐ Primary ☐ Secondary ☐ Parallel
List any other air contaminant sources that are also vented to this control equipment:
_____

☒ **Fabric Filter/Baghouse**
Manufacturer: TO BE DETERMINED Year installed: NEW FACILITY
What do you call this control equipment: BUNKER FILTER 5
Pollutant(s) controlled: ☒ PE ☐ OC ☐ SO_2 ☐ NOx ☐ CO ☐ Other _____
Estimated capture efficiency (%):100 Basis for efficiency: ENGINEERING DESIGN
Design control efficiency (%):99.9 Basis for efficiency: LITERATURE
Operating pressure drop range (inches of water): Minimum: 3 Maximum: 6
Pressure type: ☐ Negative pressure ☒ Positive pressure
Fabric cleaning mechanism: ☐ Reverse air ☒ Pulse jet ☐ Shaker ☐ Other _____
☐ Lime injection or fabric coating agent used: Type: _____ Feed rate: _____
☒ This is the only control equipment on this air contaminant source
If no, this control equipment is: ☐ Primary ☐ Secondary ☐ Parallel
List any other air contaminant sources that are also vented to this control equipment:
_____

☐ **Wet Scrubber**
Manufacturer: _____ Year installed: _____
What do you call this control equipment: _____
Pollutant(s) controlled: ☐ PE ☐ OC ☐ SO_2 ☐ NOx ☐ CO ☐ Other _____
Estimated capture efficiency (%): _____ Basis for efficiency: _____
Design control efficiency (%): _____ Basis for efficiency: _____
Type: ☐ Spray chamber ☐ Packed bed ☐ Impingement ☐ Venturi ☐ Other _____
Operating pressure drop range (inches of water): Minimum: _____ Maximum: _____
pH range for scrubbing liquid: Minimum: _____ Maximum: _____
Scrubbing liquid flow rate (gal/min): _____
Is scrubber liquid recirculated? ☐ Yes ☐ No
Water supply pressure (psig): _____ NOTE: This item for spray chambers only.
☐ This is the only control equipment on this air contaminant source
If no, this control equipment is: ☐ Primary ☐ Secondary ☐ Parallel
List any other air contaminant sources that are also vented to this control equipment:
_____

☐ **Electrostatic Precipitator**
Manufacturer: _____ Year installed: _____
What do you call this control equipment: _____
Pollutant(s) controlled: ☐ PE ☐ OC ☐ SO_2 ☐ NOx ☐ CO ☐ Other _____
Estimated capture efficiency (%): _____ Basis for efficiency: _____
Design control efficiency (%): _____ Basis for efficiency: _____

Section II - Specific Air Contaminant Source Information

Type: ☐ Plate-wire ☐ Flat-plate ☐ Tubular ☐ Wet ☐ Other _____
Number of operating fields: _____

☐ This is the only control equipment on this air contaminant source
If no, this control equipment is: ☐ Primary ☐ Secondary ☐ Parallel
List any other air contaminant sources that are also vented to this control equipment:
_____

☐ **Concentrator**
Manufacturer: _____ Year installed: _____
What do you call this control equipment: _____
Pollutant(s) controlled: ☐ PE ☐ OC ☐ SO_2 ☐ NOx ☐ CO ☐ Other _____
Estimated capture efficiency (%): _____ Basis for efficiency: _____
Design regeneration cycle time (minutes): _____
Minimum desorption air stream temperature (°F): _____
Rotational rate (revolutions/hour): _____
☐ This is the only control equipment on this air contaminant source
If no, this control equipment is: ☐ Primary ☐ Secondary ☐ Parallel
List any other air contaminant sources that are also vented to this control equipment:
_____

☐ **Catalytic Incinerator**
Manufacturer: _____ Year installed: _____
What do you call this control equipment: _____
Pollutant(s) controlled: ☐ PE ☐ OC ☐ SO_2 ☐ NOx ☐ CO ☐ Other _____
Estimated capture efficiency (%): _____ Basis for efficiency: _____
Design control efficiency (%): _____ Basis for efficiency: _____
Minimum inlet gas temperature (°F): _____
Combustion chamber residence time (seconds): _____
Minimum temperature difference (°F) across catalyst during air contaminant source operation: _____
☐ This is the only control equipment on this air contaminant source
If no, this control equipment is: ☐ Primary ☐ Secondary ☐ Parallel
List any other air contaminant sources that are also vented to this control equipment:
_____

☐ **Thermal Incinerator/Thermal Oxidizer**
Manufacturer: _____ Year installed: _____
What do you call this control equipment: _____
Pollutant(s) controlled: ☐ PE ☐ OC ☐ SO_2 ☐ NOx ☐ CO ☐ Other _____
Estimated capture efficiency (%): _____ Basis for efficiency: _____
Design control efficiency (%): _____ Basis for efficiency: _____
Minimum operating temperature (°F) and location: _____ (See line by line instructions.)
Combustion chamber residence time (seconds): _____
☐ This is the only control equipment on this air contaminant source
If no, this control equipment is: ☐ Primary ☐ Secondary ☐ Parallel
List any other air contaminant sources that are also vented to this control equipment:
_____

☐ **Flare**
Manufacturer: _____ Year installed: _____
What do you call this control equipment: _____
Pollutant(s) controlled: ☐ PE ☐ OC ☐ SO_2 ☐ NOx ☐ CO ☐ Other _____
Estimated capture efficiency (%): _____ Basis for efficiency: _____
Design control efficiency (%): _____ Basis for efficiency: _____
Type: ☐ Enclosed ☐ Elevated (open)
Ignition device: ☐ Electric arc ☐ Pilot flame
Flame presence sensor: ☐ Yes ☐ No
☐ This is the only control equipment on this air contaminant source
If no, this control equipment is: ☐ Primary ☐ Secondary ☐ Parallel
List any other air contaminant sources that are also vented to this control equipment:

Section II - Specific Air Contaminant Source Information

☐ **Condenser**

Manufacturer: _____ Year installed: _____
What do you call this control equipment: _____
Pollutant(s) controlled: ☐ PE ☐ OC ☐ SO_2 ☐ NOx ☐ CO ☐ Other _____
Estimated capture efficiency (%):_____ Basis for efficiency: _____
Design control efficiency (%):_____ Basis for efficiency: _____

Type: ☐ Indirect contact ☐ Direct contact
Maximum exhaust gas temperature (°F) during air contaminant source operation: _____
Coolant type: _____
Design coolant temperature (°F): Minimum _____ Maximum _____
Design coolant flow rate (gpm): _____
☐ This is the only control equipment on this air contaminant source
If no, this control equipment is: ☐ Primary ☐ Secondary ☐ Parallel
List any other air contaminant sources that are also vented to this control equipment:
_____

☐ **Carbon Absorber**

Manufacturer: _____ Year installed: _____
What do you call this control equipment: _____
Pollutant(s) controlled: ☐ PE ☐ OC ☐ SO_2 ☐ NOx ☐ CO ☐ Other _____
Estimated capture efficiency (%):_____ Basis for efficiency: _____
Design control efficiency (%):_____ Basis for efficiency: _____
Type: ☐ On-site regenerative ☐ Disposable
Maximum design outlet organic compound concentration (ppmv): _____
Carbon replacement frequency or regeneration cycle time (specify units): _____
Maximum temperature of the carbon bed, after regeneration (including any cooling cycle): _____
☐ This is the only control equipment on this air contaminant source
If no, this control equipment is: ☐ Primary ☐ Secondary ☐ Parallel
List any other air contaminant sources that are also vented to this control equipment:
_____

☐ **Dry Scrubber**

Manufacturer: _____ Year installed: _____
What do you call this control equipment: _____
Pollutant(s) controlled: ☐ PE ☐ OC ☐ SO_2 ☐ NOx ☐ CO ☐ Other _____
Estimated capture efficiency (%):_____ Basis for efficiency: _____
Design control efficiency (%):_____ Basis for efficiency: _____
Reagent(s) used: Type: _____ Injection rate(s): _____
Operating pressure drop range (inches of water): Minimum: _____ Maximum: _____
☐ This is the only control equipment on this air contaminant source
If no, this control equipment is: ☐ Primary ☐ Secondary ☐ Parallel
List any other air contaminant sources that are also vented to this control equipment:
_____

☐ **Paint booth filter**

Type: ☐ Paper ☐ Fiberglass ☐ Water curtain ☐ Other _____
Design control efficiency (%):_____ Basis for efficiency: _____

☐ **Other,** describe _____

Manufacturer: _____ Year installed: _____
What do you call this control equipment: _____
Pollutant(s) controlled: ☐ PE ☐ OC ☐ SO_2 ☐ NOx ☐ CO ☐ Other
Estimated capture efficiency (%): _____ Basis for efficiency: _____

Design control efficiency (%):_____ Basis for efficiency: _____
☐ This is the only control equipment on this air contaminant source
If no, this control equipment is: ☐ Primary ☐ Secondary ☐ Parallel

Section II - Specific Air Contaminant Source Information

List any other air contaminant sources that are also vented to this control equipment:

6. Attach a Process or Activity Flow Diagram to this application for each air contaminant source included in the application. The diagram should indicate their relationships to one another. See the line by line PTI instructions for additional information.

7. Emissions egress point(s) information: PTIs which allow total emissions in excess of the thresholds listed below will be subject to an air quality modeling analysis. This analysis is to assure that the impact from the requested project will not exceed Ohio=s Acceptable Incremental Impacts for criteria pollutants and/or Maximum Allowable Ground Level Concentrations (MAGLC) for air toxics. Permit requests that would have unacceptable impacts can not be approved as proposed. See the line by line PTI instructions for additional information.

   Complete the tables below if the requested allowable annual emission rate for this PTI exceeds any of the following:

   - Particulate Matter (PM10): 10 tons per year
   - Sulfur Dioxide (SO2): 25 tons per year
   - Nitrogen Oxides (NOx): 25 tons per year
   - Carbon Monoxide (CO): 100 tons per year
   - Air Toxic: 1 ton per year. An air toxic is any air pollutant for which the American Council of Governmental Industrial Hygienists (ACGIH) has established a Threshold Limit Value (TLV).

   Complete Table 7-A below for each stack emissions egress point. An egress point is a point at which emissions from an air contaminant source are released into the ambient (outside) air. List each individual egress point on a separate line.

Table 7-A, Stack Egress Point Information

Company Name or ID for the Egress Point (examples: Stack A; Boiler Stack; etc.)	Type Code*	Stack Egress Point Shape and Dimensions (in)(examples: round 10 inch ID; rectangular 14 X 16 inches; etc.)	Stack Egress Point Height from the Ground (ft)	Stack Temp. at Max. Capacity (F)	Stack Flow Rate at Max. Capacity (ACFM)	Minimum Distance to the Property Line (ft)
COAL BUNKER 5	A	RECT. 2 FT X 3 FT	250	68	10,000	1,000

*Type codes for stack egress points:

A. vertical stack (unobstructed): There are no obstructions to upward flow in or on the stack such as a rain cap.
B. vertical stack (obstructed): There are obstructions to the upward flow, such as a rain cap, which prevents or inhibits the air flow in a vertical direction.
C. non-vertical stack: The stack directs the air flow in a direction which is not directly upward.

Complete Table 7-B below for each fugitive emissions egress point. List each individual egress point on a separate line. Refer to the description of the fugitive egress point type codes below the table for use in completing the type code column of the table. For air contaminant sources like roadways and storage piles, only the first 5 columns need to be completed. For an air contaminant source with multiple fugitive emissions egress points, include only the primary egress points.

Table 7-B, Fugitive Egress Point Information

Company ID for the Egress Point (examples; Garage Door B, Building C; Roof Monitor; etc.)	Type Code*	Egress Point Description (examples: garage door, 12 X 30 feet, west wall; outside gravel storage piles; etc.)	Fugitive Egress Point Height from the Ground (ft)	Minimum Distance to the Property Line (ft)	Exit Gas Temp. (F)

Section II - Specific Air Contaminant Source Information

*Type codes for fugitive egress point:

D. door or window
E. other opening in the building without a duct
F. no stack and no building enclosing the air contaminant source (e.g., roadways)

Complete Table 7-C below for each Stack Egress Point identified in Table 7-A above. In each case, use the dimensions of the largest nearby building, building segment or structure. List each individual egress point on a separate line. Use the same Company Name or ID for the Egress Point in Table 7-C that was used in Table 7-A. See the line by line PTI instructions for additional information.

Table 7-C, Egress Point Additional Information (Add rows as necessary)

Company ID or Name for the Egress Point	Building Height (ft)	Building Width (ft)	Building Length (ft)
COAL BUNKER 5	200	100	150

8. Request for Federally Enforceable Limits

As part of this permit application, do you wish to propose voluntary restrictions to limit emissions in order to avoid specific requirements listed below, (i.e., are you requesting federally enforceable limits to obtain synthetic minor status)?

☐ yes
☒ no
☐ not sure - please contact me if this affects me

If yes, why are you requesting federally enforceable limits? Check all that apply.

a. ☐ to avoid being a major source (see OAC rule 3745-77-01)
b. ☐ to avoid being a major MACT source (see OAC rule 3745-31-01)
c. ☐ to avoid being a major modification (see OAC rule 3745-31-01)
d. ☐ to avoid being a major stationary source (see OAC rule 3745-31-01)
e. ☐ to avoid an air dispersion modeling requirement (see Engineering Guide # 69)
f. ☐ to avoid another requirement. Describe: _____

If you checked a., b. or d., please attach a facility-wide potential to emit (PTE) analysis (for each pollutant) and synthetic minor strategy to this application. (See line by line instructions for definition of PTE.) If you checked c., please attach a net emission change analysis to this application.

9. If this air contaminant source utilizes any continuous emissions monitoring equipment for indicating or demonstrating compliance, complete the following table. This does not include continuous parametric monitoring systems.

Company ID for Egress Point	Type of Monitor	Applicable performance specification (40 CFR 60, Appendix B)	Pollutant(s) Monitored

10. Do you wish to permit this air contaminant source as a portable source, allowing relocation within the state in accordance with OAC rule 3745-31-03 or OAC rule 3745-31-05?

Section II - Specific Air Contaminant Source Information

☐ yes - Note: notification requirements in rules cited above must be followed.
☒ no

11. The appropriate Emissions Activity Category (EAC) form(s) must be completed and attached for each air contaminant source. At least one complete EAC form must be submitted for each air contaminant source for the application to be considered complete. Refer to the list attached to the PTI instructions.

Section II - Specific Air Contaminant Source Information

NOTE: One copy of this section should be filled out for each air contaminant source covered by this PTI application. See the line by line PTI instructions for additional information.

1. Company identification (name for air contaminant source for which you are applying): COAL BUNKER 6

2. List all equipment that are part of this air contaminant source: COAL BUNKER 6

3. Air Contaminant Source Installation or Modification Schedule (must be completed regardless of date of installation or modification):

   When did/will you begin to install or modify the air contaminant source? (month/year) SECOND QUARTER 2008

   When did/will you begin to operate the air contaminant source? (month/year) THIRD QUARTER 2011 **OR** after issuance of PTI _____

4. Emissions Information: The following table requests information needed to determine the applicable requirements and the compliance status of this air contaminant source with those requirements. Suggestions for how to estimate emissions may be found in the instructions to the Emissions Activity Category (EAC) forms required with this application. If you need further assistance, contact your Ohio EPA permit representative.

   - If total potential emissions of HAPs or any Air Toxic is greater than 1 ton/yr, fill in the table for that (those) pollutant(s). For all other pollutants, if "Emissions before controls (max), lb/hr" multiplied by 24 hours/day is greater than 10 lb/day, fill in the table for that pollutant.
   - If you have no add-on control equipment, "Emissions before controls= will be the same as "Actual emissions"
   - Annual emissions should be based on operating 8760 hr/yr unless you are requesting operating restrictions to limit emissions in line # 8 or have described inherent limitations below.
   - If you use units other than lb/hr or ton/yr, specify the units used (e.g., gr/dscf, lb/ton charged, lb/MMBtu, ton/12-months).
   - Requested Allowable (ton/yr) is often equivalent to Potential to Emit (PTE) as defined in OAC rule 3745-31-01 and OAC rule 3745-77-01.

Pollutant	Emissions before controls (max) (lb/hr)	Actual emissions (lb/hr)	Actual emissions (ton/year)	Requested Allowable (lb/hr)	Requested Allowable (ton/year)
Particulate emissions (PE) (formerly particulate matter, PM)	40	0.43	1.9	0.43	1.9
PM_{10} (PM < 10 microns in diameter)	40	0.43	1.9	0.43	1.9
Sulfur dioxide (SO_2)	0	0	0	0	0
Nitrogen oxides (NO_x)	0	0	0	0	0
Carbon monoxide (CO)	0	0	0	0	0
Organic compounds (OC)	0	0	0	0	0
Volatile organic compounds (VOC)	0	0	0	0	0
Total HAPs	0	0	0	0	0
Highest single HAP:	0	0	0	0	0
Air Toxics (see instructions):	0	0	0	0	0

Provide your calculations as an attachment and explain how all process variables and emission factors were selected. Note the emissions factor(s) employed and document the origin. Example: AP-42, Table 4.4-3 (8/97); stack test, Method 5, 4/96; mass balance based on MSDS; etc.

Section II - Specific Air Contaminant Source Information

5. **Does this air contaminant source employ emissions control equipment?**

☒ **Yes** - fill out the applicable information below.

☐ **No** - proceed to item # 6.

Note: Pollutant abbreviations used below: Particulates = PE; Organic compounds = OC; Sulfur dioxide = SO_2; Nitrogen oxides = NOx; Carbon monoxide = CO

☐ **Cyclone/Multiclone**

Manufacturer: _____ Year installed: _____
What do you call this control equipment: _____
Pollutant(s) controlled: ☐ PE ☐ OC ☐ SO_2 ☐ NOx ☐ CO ☐ Other _____
Estimated capture efficiency (%): _____ Basis for efficiency: _____
Design control efficiency (%): _____ Basis for efficiency: _____
Type: ☐ Cyclone ☐ Multiclone ☐ Rotoclone ☐ Other _____
☐ This is the only control equipment on this air contaminant source
If no, this control equipment is: ☐ Primary ☐ Secondary ☐ Parallel
List any other air contaminant sources that are also vented to this control equipment:
_____

☒ **Fabric Filter/Baghouse**

Manufacturer: TO BE DETERMINED Year installed: NEW FACILITY
What do you call this control equipment: BUNKER FILTER 6
Pollutant(s) controlled: ☒ PE ☐ OC ☐ SO_2 ☐ NOx ☐ CO ☐ Other _____
Estimated capture efficiency (%):100 Basis for efficiency: ENGINEERING DESIGN
Design control efficiency (%):99.9 Basis for efficiency: LITERATURE
Operating pressure drop range (inches of water): Minimum: 3 Maximum: 6
Pressure type: ☐ Negative pressure ☒ Positive pressure
Fabric cleaning mechanism: ☐ Reverse air ☒ Pulse jet ☐ Shaker ☐ Other _____
☐ Lime injection or fabric coating agent used: Type: _____ Feed rate: _____
☒ This is the only control equipment on this air contaminant source
If no, this control equipment is: ☐ Primary ☐ Secondary ☐ Parallel
List any other air contaminant sources that are also vented to this control equipment:
_____

☐ **Wet Scrubber**

Manufacturer: _____ Year installed: _____
What do you call this control equipment: _____
Pollutant(s) controlled: ☐ PE ☐ OC ☐ SO_2 ☐ NOx ☐ CO ☐ Other _____
Estimated capture efficiency (%): _____ Basis for efficiency: _____
Design control efficiency (%): _____ Basis for efficiency: _____
Type: ☐ Spray chamber ☐ Packed bed ☐ Impingement ☐ Venturi ☐ Other _____
Operating pressure drop range (inches of water): Minimum: _____ Maximum: _____
pH range for scrubbing liquid: Minimum: _____ Maximum: _____
Scrubbing liquid flow rate (gal/min): _____
Is scrubber liquid recirculated? ☐ Yes ☐ No
Water supply pressure (psig): _____ NOTE: This item for spray chambers only.
☐ This is the only control equipment on this air contaminant source
If no, this control equipment is: ☐ Primary ☐ Secondary ☐ Parallel
List any other air contaminant sources that are also vented to this control equipment:
_____

☐ **Electrostatic Precipitator**

Manufacturer: _____ Year installed: _____
What do you call this control equipment: _____
Pollutant(s) controlled: ☐ PE ☐ OC ☐ SO_2 ☐ NOx ☐ CO ☐ Other _____
Estimated capture efficiency (%): _____ Basis for efficiency: _____
Design control efficiency (%): _____ Basis for efficiency: _____

Section II - Specific Air Contaminant Source Information

Type: ☐ Plate-wire ☐ Flat-plate ☐ Tubular ☐ Wet ☐ Other _____
Number of operating fields: _____

☐ This is the only control equipment on this air contaminant source
If no, this control equipment is: ☐ Primary ☐ Secondary ☐ Parallel
List any other air contaminant sources that are also vented to this control equipment:
_____

☐ **Concentrator**
Manufacturer: _____ Year installed: _____
What do you call this control equipment: _____
Pollutant(s) controlled: ☐ PE ☐ OC ☐ SO_2 ☐ NOx ☐ CO ☐ Other _____
Estimated capture efficiency (%):_____ Basis for efficiency: _____
Design regeneration cycle time (minutes): _____
Minimum desorption air stream temperature (°F): _____
Rotational rate (revolutions/hour): _____
☐ This is the only control equipment on this air contaminant source
If no, this control equipment is: ☐ Primary ☐ Secondary ☐ Parallel
List any other air contaminant sources that are also vented to this control equipment:
_____

☐ **Catalytic Incinerator**
Manufacturer: _____ Year installed: _____
What do you call this control equipment: _____
Pollutant(s) controlled: ☐ PE ☐ OC ☐ SO_2 ☐ NOx ☐ CO ☐ Other _____
Estimated capture efficiency (%):_____ Basis for efficiency: _____
Design control efficiency (%):_____ Basis for efficiency: _____
Minimum inlet gas temperature (°F): _____
Combustion chamber residence time (seconds): _____
Minimum temperature difference (°F) across catalyst during air contaminant source operation: _____
☐ This is the only control equipment on this air contaminant source
If no, this control equipment is: ☐ Primary ☐ Secondary ☐ Parallel
List any other air contaminant sources that are also vented to this control equipment:
_____

☐ **Thermal Incinerator/Thermal Oxidizer**
Manufacturer: _____ Year installed: _____
What do you call this control equipment: _____
Pollutant(s) controlled: ☐ PE ☐ OC ☐ SO_2 ☐ NOx ☐ CO ☐ Other _____
Estimated capture efficiency (%):_____ Basis for efficiency: _____
Design control efficiency (%):_____ Basis for efficiency: _____
Minimum operating temperature (°F) and location: _____ (See line by line instructions.)
Combustion chamber residence time (seconds): _____
☐ This is the only control equipment on this air contaminant source
If no, this control equipment is: ☐ Primary ☐ Secondary ☐ Parallel
List any other air contaminant sources that are also vented to this control equipment:
_____

☐ **Flare**
Manufacturer: _____ Year installed: _____
What do you call this control equipment: _____
Pollutant(s) controlled: ☐ PE ☐ OC ☐ SO_2 ☐ NOx ☐ CO ☐ Other _____
Estimated capture efficiency (%):_____ Basis for efficiency: _____
Design control efficiency (%):_____ Basis for efficiency: _____
Type: ☐ Enclosed ☐ Elevated (open)
Ignition device: ☐ Electric arc ☐ Pilot flame
Flame presence sensor: ☐ Yes ☐ No
☐ This is the only control equipment on this air contaminant source
If no, this control equipment is: ☐ Primary ☐ Secondary ☐ Parallel
List any other air contaminant sources that are also vented to this control equipment:

Section II - Specific Air Contaminant Source Information

☐ **Condenser**
Manufacturer: _____ Year installed: _____
What do you call this control equipment: _____
Pollutant(s) controlled: ☐ PE ☐ OC ☐ SO_2 ☐ NOx ☐ CO ☐ Other _____
Estimated capture efficiency (%):_____ Basis for efficiency: _____
Design control efficiency (%):_____ Basis for efficiency: _____

Type: ☐ Indirect contact ☐ Direct contact
Maximum exhaust gas temperature (°F) during air contaminant source operation: _____
Coolant type: _____
Design coolant temperature (°F): Minimum _____ Maximum _____
Design coolant flow rate (gpm): _____
☐ This is the only control equipment on this air contaminant source
If no, this control equipment is: ☐ Primary ☐ Secondary ☐ Parallel
List any other air contaminant sources that are also vented to this control equipment:
_____

☐ **Carbon Absorber**
Manufacturer: _____ Year installed: _____
What do you call this control equipment: _____
Pollutant(s) controlled: ☐ PE ☐ OC ☐ SO_2 ☐ NOx ☐ CO ☐ Other _____
Estimated capture efficiency (%):_____ Basis for efficiency: _____
Design control efficiency (%):_____ Basis for efficiency: _____
Type: ☐ On-site regenerative ☐ Disposable
Maximum design outlet organic compound concentration (ppmv): _____
Carbon replacement frequency or regeneration cycle time (specify units): _____
Maximum temperature of the carbon bed, after regeneration (including any cooling cycle): _____
☐ This is the only control equipment on this air contaminant source
If no, this control equipment is: ☐ Primary ☐ Secondary ☐ Parallel
List any other air contaminant sources that are also vented to this control equipment:
_____

☐ **Dry Scrubber**
Manufacturer: _____ Year installed: _____
What do you call this control equipment: _____
Pollutant(s) controlled: ☐ PE ☐ OC ☐ SO_2 ☐ NOx ☐ CO ☐ Other _____
Estimated capture efficiency (%):_____ Basis for efficiency: _____
Design control efficiency (%):_____ Basis for efficiency: _____
Reagent(s) used: Type: _____ Injection rate(s): _____
Operating pressure drop range (inches of water): Minimum: _____ Maximum: _____
☐ This is the only control equipment on this air contaminant source
If no, this control equipment is: ☐ Primary ☐ Secondary ☐ Parallel
List any other air contaminant sources that are also vented to this control equipment:
_____

☐ **Paint booth filter**
Type: ☐ Paper ☐ Fiberglass ☐ Water curtain ☐ Other _____
Design control efficiency (%):_____ Basis for efficiency: _____

☐ **Other**, describe _____
Manufacturer: _____ Year installed: _____
What do you call this control equipment: _____
Pollutant(s) controlled: ☐ PE ☐ OC ☐ SO_2 ☐ NOx ☐ CO ☐ Other
Estimated capture efficiency (%): _____ Basis for efficiency: _____

Design control efficiency (%):_____ Basis for efficiency: _____
☐ This is the only control equipment on this air contaminant source
If no, this control equipment is: ☐ Primary ☐ Secondary ☐ Parallel

Section II - Specific Air Contaminant Source Information

List any other air contaminant sources that are also vented to this control equipment:

6. Attach a Process or Activity Flow Diagram to this application for each air contaminant source included in the application. The diagram should indicate their relationships to one another. See the line by line PTI instructions for additional information.

7. Emissions egress point(s) information: PTIs which allow total emissions in excess of the thresholds listed below will be subject to an air quality modeling analysis. This analysis is to assure that the impact from the requested project will not exceed Ohio=s Acceptable Incremental Impacts for criteria pollutants and/or Maximum Allowable Ground Level Concentrations (MAGLC) for air toxics. Permit requests that would have unacceptable impacts can not be approved as proposed. See the line by line PTI instructions for additional information.

   Complete the tables below if the requested allowable annual emission rate for this PTI exceeds any of the following:

   - Particulate Matter (PM10): 10 tons per year
   - Sulfur Dioxide (SO2): 25 tons per year
   - Nitrogen Oxides (NOx): 25 tons per year
   - Carbon Monoxide (CO): 100 tons per year
   - Air Toxic: 1 ton per year. An air toxic is any air pollutant for which the American Council of Governmental Industrial Hygienists (ACGIH) has established a Threshold Limit Value (TLV).

   Complete Table 7-A below for each stack emissions egress point. An egress point is a point at which emissions from an air contaminant source are released into the ambient (outside) air. List each individual egress point on a separate line.

Table 7-A, Stack Egress Point Information

Company Name or ID for the Egress Point (examples: Stack A; Boiler Stack; etc.)	Type Code*	Stack Egress Point Shape and Dimensions (in)(examples: round 10 inch ID; rectangular 14 X 16 inches; etc.)	Stack Egress Point Height from the Ground (ft)	Stack Temp. at Max. Capacity (F)	Stack Flow Rate at Max. Capacity (ACFM)	Minimum Distance to the Property Line (ft)
COAL BUNKER 6	A	RECT. 2 FT X 3 FT	250	68	10,000	1,000

*Type codes for stack egress points:

A. vertical stack (unobstructed): There are no obstructions to upward flow in or on the stack such as a rain cap.
B. vertical stack (obstructed): There are obstructions to the upward flow, such as a rain cap, which prevents or inhibits the air flow in a vertical direction.
C. non-vertical stack: The stack directs the air flow in a direction which is not directly upward.

Complete Table 7-B below for each fugitive emissions egress point. List each individual egress point on a separate line. Refer to the description of the fugitive egress point type codes below the table for use in completing the type code column of the table. For air contaminant sources like roadways and storage piles, only the first 5 columns need to be completed. For an air contaminant source with multiple fugitive emissions egress points, include only the primary egress points.

Table 7-B, Fugitive Egress Point Information

Company ID for the Egress Point (examples; Garage Door B, Building C; Roof Monitor; etc.)	Type Code*	Egress Point Description (examples: garage door, 12 X 30 feet, west wall; outside gravel storage piles; etc.)	Fugitive Egress Point Height from the Ground (ft)	Minimum Distance to the Property Line (ft)	Exit Gas Temp. (F)

Section II - Specific Air Contaminant Source Information

*Type codes for fugitive egress point:

D. door or window
E. other opening in the building without a duct
F. no stack and no building enclosing the air contaminant source (e.g., roadways)

Complete Table 7-C below for each Stack Egress Point identified in Table 7-A above. In each case, use the dimensions of the largest nearby building, building segment or structure. List each individual egress point on a separate line. Use the same Company Name or ID for the Egress Point in Table 7-C that was used in Table 7-A. See the line by line PTI instructions for additional information.

Table 7-C, Egress Point Additional Information (Add rows as necessary)

Company ID or Name for the Egress Point	Building Height (ft)	Building Width (ft)	Building Length (ft)
COAL BUNKER 6	200	100	150

8. Request for Federally Enforceable Limits

As part of this permit application, do you wish to propose voluntary restrictions to limit emissions in order to avoid specific requirements listed below, (i.e., are you requesting federally enforceable limits to obtain synthetic minor status)?

☐ yes
☒ no
☐ not sure - please contact me if this affects me

If yes, why are you requesting federally enforceable limits? Check all that apply.

a. ☐ to avoid being a major source (see OAC rule 3745-77-01)
b. ☐ to avoid being a major MACT source (see OAC rule 3745-31-01)
c. ☐ to avoid being a major modification (see OAC rule 3745-31-01)
d. ☐ to avoid being a major stationary source (see OAC rule 3745-31-01)
e. ☐ to avoid an air dispersion modeling requirement (see Engineering Guide # 69)
f. ☐ to avoid another requirement. Describe: _____

If you checked a., b. or d., please attach a facility-wide potential to emit (PTE) analysis (for each pollutant) and synthetic minor strategy to this application. (See line by line instructions for definition of PTE.) If you checked c., please attach a net emission change analysis to this application.

9. If this air contaminant source utilizes any continuous emissions monitoring equipment for indicating or demonstrating compliance, complete the following table. This does not include continuous parametric monitoring systems.

Company ID for Egress Point	Type of Monitor	Applicable performance specification (40 CFR 60, Appendix B)	Pollutant(s) Monitored

10. Do you wish to permit this air contaminant source as a portable source, allowing relocation within the state in accordance with OAC rule 3745-31-03 or OAC rule 3745-31-05?

Section II - Specific Air Contaminant Source Information

☐ yes - Note: notification requirements in rules cited above must be followed.
☒ no

11. The appropriate Emissions Activity Category (EAC) form(s) must be completed and attached for each air contaminant source. At least one complete EAC form must be submitted for each air contaminant source for the application to be considered complete. Refer to the list attached to the PTI instructions.

Section II - Specific Air Contaminant Source Information

NOTE: One copy of this section should be filled out for each air contaminant source covered by this PTI application. See the line by line PTI instructions for additional information.

1. Company identification (name for air contaminant source for which you are applying): COAL BUNKER 7

2. List all equipment that are part of this air contaminant source: COAL BUNKER 7

3. Air Contaminant Source Installation or Modification Schedule (must be completed regardless of date of installation or modification):

   When did/will you begin to install or modify the air contaminant source? (month/year) SECOND QUARTER 2008

   When did/will you begin to operate the air contaminant source? (month/year) THIRD QUARTER 2011 **OR** after issuance of PTI _____

4. Emissions Information: The following table requests information needed to determine the applicable requirements and the compliance status of this air contaminant source with those requirements. Suggestions for how to estimate emissions may be found in the instructions to the Emissions Activity Category (EAC) forms required with this application. If you need further assistance, contact your Ohio EPA permit representative.

   - If total potential emissions of HAPs or any Air Toxic is greater than 1 ton/yr, fill in the table for that (those) pollutant(s). For all other pollutants, if "Emissions before controls (max), lb/hr" multiplied by 24 hours/day is greater than 10 lb/day, fill in the table for that pollutant.
   - If you have no add-on control equipment, "Emissions before controls= will be the same as "Actual emissions"
   - Annual emissions should be based on operating 8760 hr/yr unless you are requesting operating restrictions to limit emissions in line # 8 or have described inherent limitations below.
   - If you use units other than lb/hr or ton/yr, specify the units used (e.g., gr/dscf, lb/ton charged, lb/MMBtu, ton/12-months).
   - Requested Allowable (ton/yr) is often equivalent to Potential to Emit (PTE) as defined in OAC rule 3745-31-01 and OAC rule 3745-77-01.

Pollutant	Emissions before controls (max) (lb/hr)	Actual emissions (lb/hr)	Actual emissions (ton/year)	Requested Allowable (lb/hr)	Requested Allowable (ton/year)
Particulate emissions (PE) (formerly particulate matter, PM)	40	0.43	1.9	0.43	1.9
PM_{10} (PM < 10 microns in diameter)	40	0.43	1.9	0.43	1.9
Sulfur dioxide (SO_2)	0	0	0	0	0
Nitrogen oxides (NO_x)	0	0	0	0	0
Carbon monoxide (CO)	0	0	0	0	0
Organic compounds (OC)	0	0	0	0	0
Volatile organic compounds (VOC)	0	0	0	0	0
Total HAPs	0	0	0	0	0
Highest single HAP:	0	0	0	0	0
Air Toxics (see instructions):	0	0	0	0	0

Provide your calculations as an attachment and explain how all process variables and emission factors were selected. Note the emissions factor(s) employed and document the origin. Example: AP-42, Table 4.4-3 (8/97); stack test, Method 5, 4/96; mass balance based on MSDS; etc.

Section II - Specific Air Contaminant Source Information

5. **Does this air contaminant source employ emissions control equipment?**

☒ **Yes** - fill out the applicable information below.

☐ **No** - proceed to item # 6.

Note: Pollutant abbreviations used below: Particulates = PE; Organic compounds = OC; Sulfur dioxide = SO_2; Nitrogen oxides = NOx; Carbon monoxide = CO

☐ **Cyclone/Multiclone**
Manufacturer: _____ Year installed: _____
What do you call this control equipment: _____
Pollutant(s) controlled: ☐ PE ☐ OC ☐ SO_2 ☐ NOx ☐ CO ☐ Other _____
Estimated capture efficiency (%): _____ Basis for efficiency: _____
Design control efficiency (%): _____ Basis for efficiency: _____
Type: ☐ Cyclone ☐ Multiclone ☐ Rotoclone ☐ Other _____
☐ This is the only control equipment on this air contaminant source
If no, this control equipment is: ☐ Primary ☐ Secondary ☐ Parallel
List any other air contaminant sources that are also vented to this control equipment:
_____

☒ **Fabric Filter/Baghouse**
Manufacturer: TO BE DETERMINED Year installed: NEW FACILITY
What do you call this control equipment: BUNKER FILTER 7
Pollutant(s) controlled: ☒ PE ☐ OC ☐ SO_2 ☐ NOx ☐ CO ☐ Other _____
Estimated capture efficiency (%):100 Basis for efficiency: ENGINEERING DESIGN
Design control efficiency (%):99.9 Basis for efficiency: LITERATURE
Operating pressure drop range (inches of water): Minimum: 3 Maximum: 6
Pressure type: ☐ Negative pressure ☒ Positive pressure
Fabric cleaning mechanism: ☐ Reverse air ☒ Pulse jet ☐ Shaker ☐ Other _____
☐ Lime injection or fabric coating agent used: Type: _____ Feed rate: _____
☒ This is the only control equipment on this air contaminant source
If no, this control equipment is: ☐ Primary ☐ Secondary ☐ Parallel
List any other air contaminant sources that are also vented to this control equipment:
_____

☐ **Wet Scrubber**
Manufacturer: _____ Year installed: _____
What do you call this control equipment: _____
Pollutant(s) controlled: ☐ PE ☐ OC ☐ SO_2 ☐ NOx ☐ CO ☐ Other _____
Estimated capture efficiency (%): _____ Basis for efficiency: _____
Design control efficiency (%): _____ Basis for efficiency: _____
Type: ☐ Spray chamber ☐ Packed bed ☐ Impingement ☐ Venturi ☐ Other _____
Operating pressure drop range (inches of water): Minimum: _____ Maximum: _____
pH range for scrubbing liquid: Minimum: _____ Maximum: _____
Scrubbing liquid flow rate (gal/min): _____
Is scrubber liquid recirculated? ☐ Yes ☐ No
Water supply pressure (psig): _____ NOTE: This item for spray chambers only.
☐ This is the only control equipment on this air contaminant source
If no, this control equipment is: ☐ Primary ☐ Secondary ☐ Parallel
List any other air contaminant sources that are also vented to this control equipment:
_____

☐ **Electrostatic Precipitator**
Manufacturer: _____ Year installed: _____
What do you call this control equipment: _____
Pollutant(s) controlled: ☐ PE ☐ OC ☐ SO_2 ☐ NOx ☐ CO ☐ Other _____
Estimated capture efficiency (%): _____ Basis for efficiency: _____
Design control efficiency (%): _____ Basis for efficiency: _____

Section II - Specific Air Contaminant Source Information

Type: ☐ Plate-wire ☐ Flat-plate ☐ Tubular ☐ Wet ☐ Other _____
Number of operating fields: _____

☐ This is the only control equipment on this air contaminant source
If no, this control equipment is: ☐ Primary ☐ Secondary ☐ Parallel
List any other air contaminant sources that are also vented to this control equipment:
_____

☐ **Concentrator**
Manufacturer: _____ Year installed: _____
What do you call this control equipment: _____
Pollutant(s) controlled: ☐ PE ☐ OC ☐ SO_2 ☐ NOx ☐ CO ☐ Other _____
Estimated capture efficiency (%): _____ Basis for efficiency: _____
Design regeneration cycle time (minutes): _____
Minimum desorption air stream temperature (°F): _____
Rotational rate (revolutions/hour): _____
☐ This is the only control equipment on this air contaminant source
If no, this control equipment is: ☐ Primary ☐ Secondary ☐ Parallel
List any other air contaminant sources that are also vented to this control equipment:
_____

☐ **Catalytic Incinerator**
Manufacturer: _____ Year installed: _____
What do you call this control equipment: _____
Pollutant(s) controlled: ☐ PE ☐ OC ☐ SO_2 ☐ NOx ☐ CO ☐ Other _____
Estimated capture efficiency (%): _____ Basis for efficiency: _____
Design control efficiency (%): _____ Basis for efficiency: _____
Minimum inlet gas temperature (°F): _____
Combustion chamber residence time (seconds): _____
Minimum temperature difference (°F) across catalyst during air contaminant source operation: _____
☐ This is the only control equipment on this air contaminant source
If no, this control equipment is: ☐ Primary ☐ Secondary ☐ Parallel
List any other air contaminant sources that are also vented to this control equipment:
_____

☐ **Thermal Incinerator/Thermal Oxidizer**
Manufacturer: _____ Year installed: _____
What do you call this control equipment: _____
Pollutant(s) controlled: ☐ PE ☐ OC ☐ SO_2 ☐ NOx ☐ CO ☐ Other _____
Estimated capture efficiency (%): _____ Basis for efficiency: _____
Design control efficiency (%): _____ Basis for efficiency: _____
Minimum operating temperature (°F) and location: _____ (See line by line instructions.)
Combustion chamber residence time (seconds): _____
☐ This is the only control equipment on this air contaminant source
If no, this control equipment is: ☐ Primary ☐ Secondary ☐ Parallel
List any other air contaminant sources that are also vented to this control equipment:
_____

☐ **Flare**
Manufacturer: _____ Year installed: _____
What do you call this control equipment: _____
Pollutant(s) controlled: ☐ PE ☐ OC ☐ SO_2 ☐ NOx ☐ CO ☐ Other _____
Estimated capture efficiency (%): _____ Basis for efficiency: _____
Design control efficiency (%): _____ Basis for efficiency: _____
Type: ☐ Enclosed ☐ Elevated (open)
Ignition device: ☐ Electric arc ☐ Pilot flame
Flame presence sensor: ☐ Yes ☐ No
☐ This is the only control equipment on this air contaminant source
If no, this control equipment is: ☐ Primary ☐ Secondary ☐ Parallel
List any other air contaminant sources that are also vented to this control equipment:

Section II - Specific Air Contaminant Source Information

☐ **Condenser**
Manufacturer: _____ Year installed: _____
What do you call this control equipment: _____
Pollutant(s) controlled: ☐ PE ☐ OC ☐ SO_2 ☐ NOx ☐ CO ☐ Other _____
Estimated capture efficiency (%):_____ Basis for efficiency: _____
Design control efficiency (%):_____ Basis for efficiency: _____

Type: ☐ Indirect contact ☐ Direct contact
Maximum exhaust gas temperature (°F) during air contaminant source operation: _____
Coolant type: _____
Design coolant temperature (°F): Minimum _____ Maximum _____
Design coolant flow rate (gpm): _____
☐ This is the only control equipment on this air contaminant source
If no, this control equipment is: ☐ Primary ☐ Secondary ☐ Parallel
List any other air contaminant sources that are also vented to this control equipment:
_____

☐ **Carbon Absorber**
Manufacturer: _____ Year installed: _____
What do you call this control equipment: _____
Pollutant(s) controlled: ☐ PE ☐ OC ☐ SO_2 ☐ NOx ☐ CO ☐ Other _____
Estimated capture efficiency (%):_____ Basis for efficiency: _____
Design control efficiency (%):_____ Basis for efficiency: _____
Type: ☐ On-site regenerative ☐ Disposable
Maximum design outlet organic compound concentration (ppmv): _____
Carbon replacement frequency or regeneration cycle time (specify units): _____
Maximum temperature of the carbon bed, after regeneration (including any cooling cycle): _____
☐ This is the only control equipment on this air contaminant source
If no, this control equipment is: ☐ Primary ☐ Secondary ☐ Parallel
List any other air contaminant sources that are also vented to this control equipment:
_____

☐ **Dry Scrubber**
Manufacturer: _____ Year installed: _____
What do you call this control equipment: _____
Pollutant(s) controlled: ☐ PE ☐ OC ☐ SO_2 ☐ NOx ☐ CO ☐ Other _____
Estimated capture efficiency (%):_____ Basis for efficiency: _____
Design control efficiency (%):_____ Basis for efficiency: _____
Reagent(s) used: Type: _____ Injection rate(s): _____
Operating pressure drop range (inches of water): Minimum: _____ Maximum: _____
☐ This is the only control equipment on this air contaminant source
If no, this control equipment is: ☐ Primary ☐ Secondary ☐ Parallel
List any other air contaminant sources that are also vented to this control equipment:
_____

☐ **Paint booth filter**
Type: ☐ Paper ☐ Fiberglass ☐ Water curtain ☐ Other _____
Design control efficiency (%):_____ Basis for efficiency: _____

☐ **Other**, describe _____
Manufacturer: _____ Year installed: _____
What do you call this control equipment: _____
Pollutant(s) controlled: ☐ PE ☐ OC ☐ SO_2 ☐ NOx ☐ CO ☐ Other
Estimated capture efficiency (%): _____ Basis for efficiency: _____

Design control efficiency (%):_____ Basis for efficiency: _____
☐ This is the only control equipment on this air contaminant source
If no, this control equipment is: ☐ Primary ☐ Secondary ☐ Parallel

Section II - Specific Air Contaminant Source Information

List any other air contaminant sources that are also vented to this control equipment:

_____

6. Attach a Process or Activity Flow Diagram to this application for each air contaminant source included in the application. The diagram should indicate their relationships to one another. See the line by line PTI instructions for additional information.

7. Emissions egress point(s) information: PTIs which allow total emissions in excess of the thresholds listed below will be subject to an air quality modeling analysis. This analysis is to assure that the impact from the requested project will not exceed Ohio=s Acceptable Incremental Impacts for criteria pollutants and/or Maximum Allowable Ground Level Concentrations (MAGLC) for air toxics. Permit requests that would have unacceptable impacts can not be approved as proposed. See the line by line PTI instructions for additional information.

   Complete the tables below if the requested allowable annual emission rate for this PTI exceeds any of the following:

   - Particulate Matter (PM10): 10 tons per year
   - Sulfur Dioxide (SO2): 25 tons per year
   - Nitrogen Oxides (NOx): 25 tons per year
   - Carbon Monoxide (CO): 100 tons per year
   - Air Toxic: 1 ton per year. An air toxic is any air pollutant for which the American Council of Governmental Industrial Hygienists (ACGIH) has established a Threshold Limit Value (TLV).

   Complete Table 7-A below for each stack emissions egress point. An egress point is a point at which emissions from an air contaminant source are released into the ambient (outside) air. List each individual egress point on a separate line.

Table 7-A, Stack Egress Point Information

Company Name or ID for the Egress Point (examples: Stack A; Boiler Stack; etc.)	Type Code*	Stack Egress Point Shape and Dimensions (in)(examples: round 10 inch ID; rectangular 14 X 16 inches; etc.)	Stack Egress Point Height from the Ground (ft)	Stack Temp. at Max. Capacity (F)	Stack Flow Rate at Max. Capacity (ACFM)	Minimum Distance to the Property Line (ft)
COAL BUNKER 7	A	RECT. 2 FT X 3 FT	250	68	10,000	1,000

*Type codes for stack egress points:

A. vertical stack (unobstructed): There are no obstructions to upward flow in or on the stack such as a rain cap.
B. vertical stack (obstructed): There are obstructions to the upward flow, such as a rain cap, which prevents or inhibits the air flow in a vertical direction.
C. non-vertical stack: The stack directs the air flow in a direction which is not directly upward.

Complete Table 7-B below for each fugitive emissions egress point. List each individual egress point on a separate line. Refer to the description of the fugitive egress point type codes below the table for use in completing the type code column of the table. For air contaminant sources like roadways and storage piles, only the first 5 columns need to be completed. For an air contaminant source with multiple fugitive emissions egress points, include only the primary egress points.

Table 7-B, Fugitive Egress Point Information

Company ID for the Egress Point (examples; Garage Door B, Building C; Roof Monitor; etc.)	Type Code*	Egress Point Description (examples: garage door, 12 X 30 feet, west wall; outside gravel storage piles; etc.)	Fugitive Egress Point Height from the Ground (ft)	Minimum Distance to the Property Line (ft)	Exit Gas Temp. (F)

Section II - Specific Air Contaminant Source Information

*Type codes for fugitive egress point:

D. door or window
E. other opening in the building without a duct
F. no stack and no building enclosing the air contaminant source (e.g., roadways)

Complete Table 7-C below for each Stack Egress Point identified in Table 7-A above. In each case, use the dimensions of the largest nearby building, building segment or structure. List each individual egress point on a separate line. Use the same Company Name or ID for the Egress Point in Table 7-C that was used in Table 7-A. See the line by line PTI instructions for additional information.

Table 7-C, Egress Point Additional Information (Add rows as necessary)

Company ID or Name for the Egress Point	Building Height (ft)	Building Width (ft)	Building Length (ft)
COAL BUNKER 7	200	100	150

8. Request for Federally Enforceable Limits

As part of this permit application, do you wish to propose voluntary restrictions to limit emissions in order to avoid specific requirements listed below, (i.e., are you requesting federally enforceable limits to obtain synthetic minor status)?

☐ yes
☒ no
☐ not sure - please contact me if this affects me

If yes, why are you requesting federally enforceable limits? Check all that apply.

a. ☐ to avoid being a major source (see OAC rule 3745-77-01)
b. ☐ to avoid being a major MACT source (see OAC rule 3745-31-01)
c. ☐ to avoid being a major modification (see OAC rule 3745-31-01)
d. ☐ to avoid being a major stationary source (see OAC rule 3745-31-01)
e. ☐ to avoid an air dispersion modeling requirement (see Engineering Guide # 69)
f. ☐ to avoid another requirement. Describe: _____

If you checked a., b. or d., please attach a facility-wide potential to emit (PTE) analysis (for each pollutant) and synthetic minor strategy to this application. (See line by line instructions for definition of PTE.) If you checked c., please attach a net emission change analysis to this application.

9. If this air contaminant source utilizes any continuous emissions monitoring equipment for indicating or demonstrating compliance, complete the following table. This does not include continuous parametric monitoring systems.

Company ID for Egress Point	Type of Monitor	Applicable performance specification (40 CFR 60, Appendix B)	Pollutant(s) Monitored

10. Do you wish to permit this air contaminant source as a portable source, allowing relocation within the state in accordance with OAC rule 3745-31-03 or OAC rule 3745-31-05?

Section II - Specific Air Contaminant Source Information

☐ yes - Note: notification requirements in rules cited above must be followed.
☒ no

11. The appropriate Emissions Activity Category (EAC) form(s) must be completed and attached for each air contaminant source. At least one complete EAC form must be submitted for each air contaminant source for the application to be considered complete. Refer to the list attached to the PTI instructions.

Section II - Specific Air Contaminant Source Information

NOTE: One copy of this section should be filled out for each air contaminant source covered by this PTI application. See the line by line PTI instructions for additional information.

1. Company identification (name for air contaminant source for which you are applying): BIOMASS BUNKER 1

2. List all equipment that are part of this air contaminant source: BIOMASS BUNKER 1

3. Air Contaminant Source Installation or Modification Schedule (must be completed regardless of date of installation or modification):

   When did/will you begin to install or modify the air contaminant source? (month/year) SECOND QUARTER 2008

   When did/will you begin to operate the air contaminant source? (month/year) THIRD QUARTER 2011 **OR** after issuance of PTI _____

4. Emissions Information: The following table requests information needed to determine the applicable requirements and the compliance status of this air contaminant source with those requirements. Suggestions for how to estimate emissions may be found in the instructions to the Emissions Activity Category (EAC) forms required with this application. If you need further assistance, contact your Ohio EPA permit representative.

   - If total potential emissions of HAPs or any Air Toxic is greater than 1 ton/yr, fill in the table for that (those) pollutant(s). For all other pollutants, if "Emissions before controls (max), lb/hr" multiplied by 24 hours/day is greater than 10 lb/day, fill in the table for that pollutant.
   - If you have no add-on control equipment, "Emissions before controls= will be the same as "Actual emissions"
   - Annual emissions should be based on operating 8760 hr/yr unless you are requesting operating restrictions to limit emissions in line # 8 or have described inherent limitations below.
   - If you use units other than lb/hr or ton/yr, specify the units used (e.g., gr/dscf, lb/ton charged, lb/MMBtu, ton/12-months).
   - Requested Allowable (ton/yr) is often equivalent to Potential to Emit (PTE) as defined in OAC rule 3745-31-01 and OAC rule 3745-77-01.

Pollutant	Emissions before controls (max) (lb/hr)	Actual emissions (lb/hr)	Actual emissions (ton/year)	Requested Allowable (lb/hr)	Requested Allowable (ton/year)
Particulate emissions (PE) (formerly particulate matter, PM)	40	0.43	1.9	0.43	1.9
PM_{10} (PM < 10 microns in diameter)	40	0.43	1.9	0.43	1.9
Sulfur dioxide (SO_2)	0	0	0	0	0
Nitrogen oxides (NO_x)	0	0	0	0	0
Carbon monoxide (CO)	0	0	0	0	0
Organic compounds (OC)	0	0	0	0	0
Volatile organic compounds (VOC)	0	0	0	0	0
Total HAPs	0	0	0	0	0
Highest single HAP:	0	0	0	0	0
Air Toxics (see instructions):	0	0	0	0	0

Provide your calculations as an attachment and explain how all process variables and emission factors were selected. Note the emissions factor(s) employed and document the origin. Example: AP-42, Table 4.4-3 (8/97); stack test, Method 5, 4/96; mass balance based on MSDS; etc.

Section II - Specific Air Contaminant Source Information

5. **Does this air contaminant source employ emissions control equipment?**

☒ **Yes** - fill out the applicable information below.

☐ **No** - proceed to item # 6.

Note: Pollutant abbreviations used below: Particulates = PE; Organic compounds = OC; Sulfur dioxide = SO_2; Nitrogen oxides = NOx; Carbon monoxide = CO

☐ **Cyclone/Multiclone**

Manufacturer: _____ Year installed: _____
What do you call this control equipment: _____
Pollutant(s) controlled: ☐ PE ☐ OC ☐ SO_2 ☐ NOx ☐ CO ☐ Other _____
Estimated capture efficiency (%): _____ Basis for efficiency: _____
Design control efficiency (%): _____ Basis for efficiency: _____
Type: ☐ Cyclone ☐ Multiclone ☐ Rotoclone ☐ Other _____
☐ This is the only control equipment on this air contaminant source
If no, this control equipment is: ☐ Primary ☐ Secondary ☐ Parallel
List any other air contaminant sources that are also vented to this control equipment:
_____

☒ **Fabric Filter/Baghouse**

Manufacturer: TO BE DETERMINED Year installed: NEW FACILITY
What do you call this control equipment: BUNKER FILTER 8
Pollutant(s) controlled: ☒ PE ☐ OC ☐ SO_2 ☐ NOx ☐ CO ☐ Other _____
Estimated capture efficiency (%):100 Basis for efficiency: ENGINEERING DESIGN
Design control efficiency (%):99.9 Basis for efficiency: LITERATURE
Operating pressure drop range (inches of water): Minimum: 3 Maximum: 6
Pressure type: ☐ Negative pressure ☒ Positive pressure
Fabric cleaning mechanism: ☐ Reverse air ☒ Pulse jet ☐ Shaker ☐ Other _____
☐ Lime injection or fabric coating agent used: Type: _____ Feed rate: _____
☒ This is the only control equipment on this air contaminant source
If no, this control equipment is: ☐ Primary ☐ Secondary ☐ Parallel
List any other air contaminant sources that are also vented to this control equipment:
_____

☐ **Wet Scrubber**

Manufacturer: _____ Year installed: _____
What do you call this control equipment: _____
Pollutant(s) controlled: ☐ PE ☐ OC ☐ SO_2 ☐ NOx ☐ CO ☐ Other _____
Estimated capture efficiency (%): _____ Basis for efficiency: _____
Design control efficiency (%): _____ Basis for efficiency: _____
Type: ☐ Spray chamber ☐ Packed bed ☐ Impingement ☐ Venturi ☐ Other _____
Operating pressure drop range (inches of water): Minimum: _____ Maximum: _____
pH range for scrubbing liquid: Minimum: _____ Maximum: _____
Scrubbing liquid flow rate (gal/min): _____
Is scrubber liquid recirculated? ☐ Yes ☐ No
Water supply pressure (psig): _____ NOTE: This item for spray chambers only.
☐ This is the only control equipment on this air contaminant source
If no, this control equipment is: ☐ Primary ☐ Secondary ☐ Parallel
List any other air contaminant sources that are also vented to this control equipment:
_____

☐ **Electrostatic Precipitator**

Manufacturer: _____ Year installed: _____
What do you call this control equipment: _____
Pollutant(s) controlled: ☐ PE ☐ OC ☐ SO_2 ☐ NOx ☐ CO ☐ Other _____
Estimated capture efficiency (%): _____ Basis for efficiency: _____
Design control efficiency (%): _____ Basis for efficiency: _____

Section II - Specific Air Contaminant Source Information

Type: ☐ Plate-wire ☐ Flat-plate ☐ Tubular ☐ Wet ☐ Other _____
Number of operating fields: _____

☐ This is the only control equipment on this air contaminant source
If no, this control equipment is: ☐ Primary ☐ Secondary ☐ Parallel
List any other air contaminant sources that are also vented to this control equipment:
_____

☐ **Concentrator**
Manufacturer: _____ Year installed: _____
What do you call this control equipment: _____
Pollutant(s) controlled: ☐ PE ☐ OC ☐ SO_2 ☐ NOx ☐ CO ☐ Other _____
Estimated capture efficiency (%): _____ Basis for efficiency: _____
Design regeneration cycle time (minutes): _____
Minimum desorption air stream temperature (°F): _____
Rotational rate (revolutions/hour): _____
☐ This is the only control equipment on this air contaminant source
If no, this control equipment is: ☐ Primary ☐ Secondary ☐ Parallel
List any other air contaminant sources that are also vented to this control equipment:
_____

☐ **Catalytic Incinerator**
Manufacturer: _____ Year installed: _____
What do you call this control equipment: _____
Pollutant(s) controlled: ☐ PE ☐ OC ☐ SO_2 ☐ NOx ☐ CO ☐ Other _____
Estimated capture efficiency (%): _____ Basis for efficiency: _____
Design control efficiency (%): _____ Basis for efficiency: _____
Minimum inlet gas temperature (°F): _____
Combustion chamber residence time (seconds): _____
Minimum temperature difference (°F) across catalyst during air contaminant source operation: _____
☐ This is the only control equipment on this air contaminant source
If no, this control equipment is: ☐ Primary ☐ Secondary ☐ Parallel
List any other air contaminant sources that are also vented to this control equipment:
_____

☐ **Thermal Incinerator/Thermal Oxidizer**
Manufacturer: _____ Year installed: _____
What do you call this control equipment: _____
Pollutant(s) controlled: ☐ PE ☐ OC ☐ SO_2 ☐ NOx ☐ CO ☐ Other _____
Estimated capture efficiency (%): _____ Basis for efficiency: _____
Design control efficiency (%): _____ Basis for efficiency: _____
Minimum operating temperature (°F) and location: _____ (See line by line instructions.)
Combustion chamber residence time (seconds): _____
☐ This is the only control equipment on this air contaminant source
If no, this control equipment is: ☐ Primary ☐ Secondary ☐ Parallel
List any other air contaminant sources that are also vented to this control equipment:
_____

☐ **Flare**
Manufacturer: _____ Year installed: _____
What do you call this control equipment: _____
Pollutant(s) controlled: ☐ PE ☐ OC ☐ SO_2 ☐ NOx ☐ CO ☐ Other _____
Estimated capture efficiency (%): _____ Basis for efficiency: _____
Design control efficiency (%): _____ Basis for efficiency: _____
Type: ☐ Enclosed ☐ Elevated (open)
Ignition device: ☐ Electric arc ☐ Pilot flame
Flame presence sensor: ☐ Yes ☐ No
☐ This is the only control equipment on this air contaminant source
If no, this control equipment is: ☐ Primary ☐ Secondary ☐ Parallel
List any other air contaminant sources that are also vented to this control equipment:

Section II - Specific Air Contaminant Source Information

☐ **Condenser**

Manufacturer: _____ Year installed: _____
What do you call this control equipment: _____
Pollutant(s) controlled: ☐ PE ☐ OC ☐ SO_2 ☐ NOx ☐ CO ☐ Other _____
Estimated capture efficiency (%):_____ Basis for efficiency: _____
Design control efficiency (%):_____ Basis for efficiency: _____

Type: ☐ Indirect contact ☐ Direct contact
Maximum exhaust gas temperature (°F) during air contaminant source operation: _____
Coolant type: _____
Design coolant temperature (°F): Minimum _____ Maximum _____
Design coolant flow rate (gpm): _____
☐ This is the only control equipment on this air contaminant source
If no, this control equipment is: ☐ Primary ☐ Secondary ☐ Parallel
List any other air contaminant sources that are also vented to this control equipment:
_____

☐ **Carbon Absorber**

Manufacturer: _____ Year installed: _____
What do you call this control equipment: _____
Pollutant(s) controlled: ☐ PE ☐ OC ☐ SO_2 ☐ NOx ☐ CO ☐ Other _____
Estimated capture efficiency (%):_____ Basis for efficiency: _____
Design control efficiency (%):_____ Basis for efficiency: _____
Type: ☐ On-site regenerative ☐ Disposable
Maximum design outlet organic compound concentration (ppmv): _____
Carbon replacement frequency or regeneration cycle time (specify units): _____
Maximum temperature of the carbon bed, after regeneration (including any cooling cycle): _____
☐ This is the only control equipment on this air contaminant source
If no, this control equipment is: ☐ Primary ☐ Secondary ☐ Parallel
List any other air contaminant sources that are also vented to this control equipment:
_____

☐ **Dry Scrubber**

Manufacturer: _____ Year installed: _____
What do you call this control equipment: _____
Pollutant(s) controlled: ☐ PE ☐ OC ☐ SO_2 ☐ NOx ☐ CO ☐ Other _____
Estimated capture efficiency (%):_____ Basis for efficiency: _____
Design control efficiency (%):_____ Basis for efficiency: _____
Reagent(s) used: Type: _____ Injection rate(s): _____
Operating pressure drop range (inches of water): Minimum: _____ Maximum: _____
☐ This is the only control equipment on this air contaminant source
If no, this control equipment is: ☐ Primary ☐ Secondary ☐ Parallel
List any other air contaminant sources that are also vented to this control equipment:
_____

☐ **Paint booth filter**

Type: ☐ Paper ☐ Fiberglass ☐ Water curtain ☐ Other _____
Design control efficiency (%):_____ Basis for efficiency: _____

☐ **Other**, describe _____

Manufacturer: _____ Year installed: _____
What do you call this control equipment: _____
Pollutant(s) controlled: ☐ PE ☐ OC ☐ SO_2 ☐ NOx ☐ CO ☐ Other
Estimated capture efficiency (%): _____ Basis for efficiency: _____

Design control efficiency (%):_____ Basis for efficiency: _____
☐ This is the only control equipment on this air contaminant source
If no, this control equipment is: ☐ Primary ☐ Secondary ☐ Parallel

Section II - Specific Air Contaminant Source Information

List any other air contaminant sources that are also vented to this control equipment:

6. Attach a Process or Activity Flow Diagram to this application for each air contaminant source included in the application. The diagram should indicate their relationships to one another. See the line by line PTI instructions for additional information.

7. Emissions egress point(s) information: PTIs which allow total emissions in excess of the thresholds listed below will be subject to an air quality modeling analysis. This analysis is to assure that the impact from the requested project will not exceed Ohio=s Acceptable Incremental Impacts for criteria pollutants and/or Maximum Allowable Ground Level Concentrations (MAGLC) for air toxics. Permit requests that would have unacceptable impacts can not be approved as proposed. See the line by line PTI instructions for additional information.

   Complete the tables below if the requested allowable annual emission rate for this PTI exceeds any of the following:

   - Particulate Matter (PM10): 10 tons per year
   - Sulfur Dioxide (SO2): 25 tons per year
   - Nitrogen Oxides (NOx): 25 tons per year
   - Carbon Monoxide (CO): 100 tons per year
   - Air Toxic: 1 ton per year. An air toxic is any air pollutant for which the American Council of Governmental Industrial Hygienists (ACGIH) has established a Threshold Limit Value (TLV).

   Complete Table 7-A below for each stack emissions egress point. An egress point is a point at which emissions from an air contaminant source are released into the ambient (outside) air. List each individual egress point on a separate line.

Table 7-A, Stack Egress Point Information

Company Name or ID for the Egress Point (examples: Stack A; Boiler Stack; etc.)	Type Code*	Stack Egress Point Shape and Dimensions (in)(examples: round 10 inch ID; rectangular 14 X 16 inches; etc.)	Stack Egress Point Height from the Ground (ft)	Stack Temp. at Max. Capacity (F)	Stack Flow Rate at Max. Capacity (ACFM)	Minimum Distance to the Property Line (ft)
BIOMASS BUNKER 1	A	RECT. 2 FT X 3 FT	250	68	10,000	1,000

*Type codes for stack egress points:

A. vertical stack (unobstructed): There are no obstructions to upward flow in or on the stack such as a rain cap.
B. vertical stack (obstructed): There are obstructions to the upward flow, such as a rain cap, which prevents or inhibits the air flow in a vertical direction.
C. non-vertical stack: The stack directs the air flow in a direction which is not directly upward.

Complete Table 7-B below for each fugitive emissions egress point. List each individual egress point on a separate line. Refer to the description of the fugitive egress point type codes below the table for use in completing the type code column of the table. For air contaminant sources like roadways and storage piles, only the first 5 columns need to be completed. For an air contaminant source with multiple fugitive emissions egress points, include only the primary egress points.

Table 7-B, Fugitive Egress Point Information

Company ID for the Egress Point (examples; Garage Door B, Building C; Roof Monitor; etc.)	Type Code*	Egress Point Description (examples: garage door, 12 X 30 feet, west wall; outside gravel storage piles; etc.)	Fugitive Egress Point Height from the Ground (ft)	Minimum Distance to the Property Line (ft)	Exit Gas Temp. (F)

Section II - Specific Air Contaminant Source Information

*Type codes for fugitive egress point:

D. door or window
E. other opening in the building without a duct
F. no stack and no building enclosing the air contaminant source (e.g., roadways)

Complete Table 7-C below for each Stack Egress Point identified in Table 7-A above. In each case, use the dimensions of the largest nearby building, building segment or structure. List each individual egress point on a separate line. Use the same Company Name or ID for the Egress Point in Table 7-C that was used in Table 7-A. See the line by line PTI instructions for additional information.

Table 7-C, Egress Point Additional Information (Add rows as necessary)			
Company ID or Name for the Egress Point	**Building Height (ft)**	**Building Width (ft)**	**Building Length (ft)**
BIOMASS BUNKER 1	200	100	150

8. Request for Federally Enforceable Limits

As part of this permit application, do you wish to propose voluntary restrictions to limit emissions in order to avoid specific requirements listed below, (i.e., are you requesting federally enforceable limits to obtain synthetic minor status)?

☐ yes
☒ no
☐ not sure - please contact me if this affects me

If yes, why are you requesting federally enforceable limits? Check all that apply.

a. ☐ to avoid being a major source (see OAC rule 3745-77-01)
b. ☐ to avoid being a major MACT source (see OAC rule 3745-31-01)
c. ☐ to avoid being a major modification (see OAC rule 3745-31-01)
d. ☐ to avoid being a major stationary source (see OAC rule 3745-31-01)
e. ☐ to avoid an air dispersion modeling requirement (see Engineering Guide # 69)
f. ☐ to avoid another requirement. Describe: _____

If you checked a., b. or d., please attach a facility-wide potential to emit (PTE) analysis (for each pollutant) and synthetic minor strategy to this application. (See line by line instructions for definition of PTE.) If you checked c., please attach a net emission change analysis to this application.

9. If this air contaminant source utilizes any continuous emissions monitoring equipment for indicating or demonstrating compliance, complete the following table. This does not include continuous parametric monitoring systems.

Company ID for Egress Point	Type of Monitor	Applicable performance specification (40 CFR 60, Appendix B)	Pollutant(s) Monitored

10. Do you wish to permit this air contaminant source as a portable source, allowing relocation within the state in accordance with OAC rule 3745-31-03 or OAC rule 3745-31-05?

Section II - Specific Air Contaminant Source Information

☐ yes - Note: notification requirements in rules cited above must be followed.
☒ no

11. The appropriate Emissions Activity Category (EAC) form(s) must be completed and attached for each air contaminant source. At least one complete EAC form must be submitted for each air contaminant source for the application to be considered complete. Refer to the list attached to the PTI instructions.

Section II - Specific Air Contaminant Source Information

NOTE: One copy of this section should be filled out for each air contaminant source covered by this PTI application. See the line by line PTI instructions for additional information.

1. Company identification (name for air contaminant source for which you are applying): BIOMASS BUNKER 2

2. List all equipment that are part of this air contaminant source: BIOMASS BUNKER 2

3. Air Contaminant Source Installation or Modification Schedule (must be completed regardless of date of installation or modification):

   When did/will you begin to install or modify the air contaminant source? (month/year) SECOND QUARTER 2008

   When did/will you begin to operate the air contaminant source? (month/year) THIRD QUARTER 2011 **OR** after issuance of PTI _____

4. Emissions Information: The following table requests information needed to determine the applicable requirements and the compliance status of this air contaminant source with those requirements. Suggestions for how to estimate emissions may be found in the instructions to the Emissions Activity Category (EAC) forms required with this application. If you need further assistance, contact your Ohio EPA permit representative.

   - If total potential emissions of HAPs or any Air Toxic is greater than 1 ton/yr, fill in the table for that (those) pollutant(s). For all other pollutants, if "Emissions before controls (max), lb/hr" multiplied by 24 hours/day is greater than 10 lb/day, fill in the table for that pollutant.
   - If you have no add-on control equipment, "Emissions before controls= will be the same as "Actual emissions"
   - Annual emissions should be based on operating 8760 hr/yr unless you are requesting operating restrictions to limit emissions in line # 8 or have described inherent limitations below.
   - If you use units other than lb/hr or ton/yr, specify the units used (e.g., gr/dscf, lb/ton charged, lb/MMBtu, ton/12-months).
   - Requested Allowable (ton/yr) is often equivalent to Potential to Emit (PTE) as defined in OAC rule 3745-31-01 and OAC rule 3745-77-01.

Pollutant	Emissions before controls (max) (lb/hr)	Actual emissions (lb/hr)	Actual emissions (ton/year)	Requested Allowable (lb/hr)	Requested Allowable (ton/year)
Particulate emissions (PE) (formerly particulate matter, PM)	40	0.43	1.9	0.43	1.9
PM_{10} (PM < 10 microns in diameter)	40	0.43	1.9	0.43	1.9
Sulfur dioxide (SO_2)	0	0	0	0	0
Nitrogen oxides (NO_x)	0	0	0	0	0
Carbon monoxide (CO)	0	0	0	0	0
Organic compounds (OC)	0	0	0	0	0
Volatile organic compounds (VOC)	0	0	0	0	0
Total HAPs	0	0	0	0	0
Highest single HAP:	0	0	0	0	0
Air Toxics (see instructions):	0	0	0	0	0

Provide your calculations as an attachment and explain how all process variables and emission factors were selected. Note the emissions factor(s) employed and document the origin. Example: AP-42, Table 4.4-3 (8/97); stack test, Method 5, 4/96; mass balance based on MSDS; etc.

Section II - Specific Air Contaminant Source Information

5. **Does this air contaminant source employ emissions control equipment?**

☒ **Yes** - fill out the applicable information below.

☐ **No** - proceed to item # 6.

Note: Pollutant abbreviations used below: Particulates = PE; Organic compounds = OC; Sulfur dioxide = SO_2; Nitrogen oxides = NOx; Carbon monoxide = CO

☐ **Cyclone/Multiclone**
Manufacturer: _____ Year installed: _____
What do you call this control equipment: _____
Pollutant(s) controlled: ☐ PE ☐ OC ☐ SO_2 ☐ NOx ☐ CO ☐ Other _____
Estimated capture efficiency (%): _____ Basis for efficiency: _____
Design control efficiency (%): _____ Basis for efficiency: _____
Type: ☐ Cyclone ☐ Multiclone ☐ Rotoclone ☐ Other _____
☐ This is the only control equipment on this air contaminant source
If no, this control equipment is: ☐ Primary ☐ Secondary ☐ Parallel
List any other air contaminant sources that are also vented to this control equipment:
_____

☒ **Fabric Filter/Baghouse**
Manufacturer: TO BE DETERMINED Year installed: NEW FACILITY
What do you call this control equipment: BUNKER FILTER 9
Pollutant(s) controlled: ☒ PE ☐ OC ☐ SO_2 ☐ NOx ☐ CO ☐ Other _____
Estimated capture efficiency (%):100 Basis for efficiency: ENGINEERING DESIGN
Design control efficiency (%):99.9 Basis for efficiency: LITERATURE
Operating pressure drop range (inches of water): Minimum: 3 Maximum: 6
Pressure type: ☐ Negative pressure ☒ Positive pressure
Fabric cleaning mechanism: ☐ Reverse air ☒ Pulse jet ☐ Shaker ☐ Other _____
☐ Lime injection or fabric coating agent used: Type: _____ Feed rate: _____
☒ This is the only control equipment on this air contaminant source
If no, this control equipment is: ☐ Primary ☐ Secondary ☐ Parallel
List any other air contaminant sources that are also vented to this control equipment:
_____

☐ **Wet Scrubber**
Manufacturer: _____ Year installed: _____
What do you call this control equipment: _____
Pollutant(s) controlled: ☐ PE ☐ OC ☐ SO_2 ☐ NOx ☐ CO ☐ Other _____
Estimated capture efficiency (%): _____ Basis for efficiency: _____
Design control efficiency (%): _____ Basis for efficiency: _____
Type: ☐ Spray chamber ☐ Packed bed ☐ Impingement ☐ Venturi ☐ Other _____
Operating pressure drop range (inches of water): Minimum: _____ Maximum: _____
pH range for scrubbing liquid: Minimum: _____ Maximum: _____
Scrubbing liquid flow rate (gal/min): _____
Is scrubber liquid recirculated? ☐ Yes ☐ No
Water supply pressure (psig): _____ NOTE: This item for spray chambers only.
☐ This is the only control equipment on this air contaminant source
If no, this control equipment is: ☐ Primary ☐ Secondary ☐ Parallel
List any other air contaminant sources that are also vented to this control equipment:
_____

☐ **Electrostatic Precipitator**
Manufacturer: _____ Year installed: _____
What do you call this control equipment: _____
Pollutant(s) controlled: ☐ PE ☐ OC ☐ SO_2 ☐ NOx ☐ CO ☐ Other _____
Estimated capture efficiency (%): _____ Basis for efficiency: _____
Design control efficiency (%): _____ Basis for efficiency: _____

Section II - Specific Air Contaminant Source Information

Type: ☐ Plate-wire ☐ Flat-plate ☐ Tubular ☐ Wet ☐ Other _____
Number of operating fields: _____

☐ This is the only control equipment on this air contaminant source
If no, this control equipment is: ☐ Primary ☐ Secondary ☐ Parallel
List any other air contaminant sources that are also vented to this control equipment:
_____

☐ **Concentrator**
Manufacturer: _____ Year installed: _____
What do you call this control equipment: _____
Pollutant(s) controlled: ☐ PE ☐ OC ☐ SO_2 ☐ NOx ☐ CO ☐ Other _____
Estimated capture efficiency (%):_____ Basis for efficiency: _____
Design regeneration cycle time (minutes): _____
Minimum desorption air stream temperature (°F): _____
Rotational rate (revolutions/hour): _____
☐ This is the only control equipment on this air contaminant source
If no, this control equipment is: ☐ Primary ☐ Secondary ☐ Parallel
List any other air contaminant sources that are also vented to this control equipment:
_____

☐ **Catalytic Incinerator**
Manufacturer: _____ Year installed: _____
What do you call this control equipment: _____
Pollutant(s) controlled: ☐ PE ☐ OC ☐ SO_2 ☐ NOx ☐ CO ☐ Other _____
Estimated capture efficiency (%):_____ Basis for efficiency: _____
Design control efficiency (%):_____ Basis for efficiency: _____
Minimum inlet gas temperature (°F): _____
Combustion chamber residence time (seconds): _____
Minimum temperature difference (°F) across catalyst during air contaminant source operation: _____
☐ This is the only control equipment on this air contaminant source
If no, this control equipment is: ☐ Primary ☐ Secondary ☐ Parallel
List any other air contaminant sources that are also vented to this control equipment:
_____

☐ **Thermal Incinerator/Thermal Oxidizer**
Manufacturer: _____ Year installed: _____
What do you call this control equipment: _____
Pollutant(s) controlled: ☐ PE ☐ OC ☐ SO_2 ☐ NOx ☐ CO ☐ Other _____
Estimated capture efficiency (%):_____ Basis for efficiency: _____
Design control efficiency (%):_____ Basis for efficiency: _____
Minimum operating temperature (°F) and location: _____ (See line by line instructions.)
Combustion chamber residence time (seconds): _____
☐ This is the only control equipment on this air contaminant source
If no, this control equipment is: ☐ Primary ☐ Secondary ☐ Parallel
List any other air contaminant sources that are also vented to this control equipment:
_____

☐ **Flare**
Manufacturer: _____ Year installed: _____
What do you call this control equipment: _____
Pollutant(s) controlled: ☐ PE ☐ OC ☐ SO_2 ☐ NOx ☐ CO ☐ Other _____
Estimated capture efficiency (%):_____ Basis for efficiency: _____
Design control efficiency (%):_____ Basis for efficiency: _____
Type: ☐ Enclosed ☐ Elevated (open)
Ignition device: ☐ Electric arc ☐ Pilot flame
Flame presence sensor: ☐ Yes ☐ No
☐ This is the only control equipment on this air contaminant source
If no, this control equipment is: ☐ Primary ☐ Secondary ☐ Parallel
List any other air contaminant sources that are also vented to this control equipment:

Section II - Specific Air Contaminant Source Information

☐ **Condenser**
Manufacturer: _____ Year installed: _____
What do you call this control equipment: _____
Pollutant(s) controlled: ☐ PE ☐ OC ☐ SO_2 ☐ NOx ☐ CO ☐ Other _____
Estimated capture efficiency (%):_____ Basis for efficiency: _____
Design control efficiency (%):_____ Basis for efficiency: _____

Type: ☐ Indirect contact ☐ Direct contact
Maximum exhaust gas temperature (°F) during air contaminant source operation: _____
Coolant type: _____
Design coolant temperature (°F): Minimum _____ Maximum _____
Design coolant flow rate (gpm): _____
☐ This is the only control equipment on this air contaminant source
If no, this control equipment is: ☐ Primary ☐ Secondary ☐ Parallel
List any other air contaminant sources that are also vented to this control equipment:
_____

☐ **Carbon Absorber**
Manufacturer: _____ Year installed: _____
What do you call this control equipment: _____
Pollutant(s) controlled: ☐ PE ☐ OC ☐ SO_2 ☐ NOx ☐ CO ☐ Other _____
Estimated capture efficiency (%):_____ Basis for efficiency: _____
Design control efficiency (%):_____ Basis for efficiency: _____
Type: ☐ On-site regenerative ☐ Disposable
Maximum design outlet organic compound concentration (ppmv): _____
Carbon replacement frequency or regeneration cycle time (specify units): _____
Maximum temperature of the carbon bed, after regeneration (including any cooling cycle): _____
☐ This is the only control equipment on this air contaminant source
If no, this control equipment is: ☐ Primary ☐ Secondary ☐ Parallel
List any other air contaminant sources that are also vented to this control equipment:
_____

☐ **Dry Scrubber**
Manufacturer: _____ Year installed: _____
What do you call this control equipment: _____
Pollutant(s) controlled: ☐ PE ☐ OC ☐ SO_2 ☐ NOx ☐ CO ☐ Other _____
Estimated capture efficiency (%):_____ Basis for efficiency: _____
Design control efficiency (%):_____ Basis for efficiency: _____
Reagent(s) used: Type: _____ Injection rate(s): _____
Operating pressure drop range (inches of water): Minimum: _____ Maximum: _____
☐ This is the only control equipment on this air contaminant source
If no, this control equipment is: ☐ Primary ☐ Secondary ☐ Parallel
List any other air contaminant sources that are also vented to this control equipment:
_____

☐ **Paint booth filter**
Type: ☐ Paper ☐ Fiberglass ☐ Water curtain ☐ Other _____
Design control efficiency (%):_____ Basis for efficiency: _____

☐ **Other,** describe _____
Manufacturer: _____ Year installed: _____
What do you call this control equipment: _____
Pollutant(s) controlled: ☐ PE ☐ OC ☐ SO_2 ☐ NOx ☐ CO ☐ Other
Estimated capture efficiency (%): _____ Basis for efficiency: _____

Design control efficiency (%):_____ Basis for efficiency: _____
☐ This is the only control equipment on this air contaminant source
If no, this control equipment is: ☐ Primary ☐ Secondary ☐ Parallel

Section II - Specific Air Contaminant Source Information

List any other air contaminant sources that are also vented to this control equipment:

_____

6. Attach a Process or Activity Flow Diagram to this application for each air contaminant source included in the application. The diagram should indicate their relationships to one another. See the line by line PTI instructions for additional information.

7. Emissions egress point(s) information: PTIs which allow total emissions in excess of the thresholds listed below will be subject to an air quality modeling analysis. This analysis is to assure that the impact from the requested project will not exceed Ohio=s Acceptable Incremental Impacts for criteria pollutants and/or Maximum Allowable Ground Level Concentrations (MAGLC) for air toxics. Permit requests that would have unacceptable impacts can not be approved as proposed. See the line by line PTI instructions for additional information.

   Complete the tables below if the requested allowable annual emission rate for this PTI exceeds any of the following:

   - Particulate Matter (PM10): 10 tons per year
   - Sulfur Dioxide (SO2): 25 tons per year
   - Nitrogen Oxides (NOx): 25 tons per year
   - Carbon Monoxide (CO): 100 tons per year
   - Air Toxic: 1 ton per year. An air toxic is any air pollutant for which the American Council of Governmental Industrial Hygienists (ACGIH) has established a Threshold Limit Value (TLV).

   Complete Table 7-A below for each stack emissions egress point. An egress point is a point at which emissions from an air contaminant source are released into the ambient (outside) air. List each individual egress point on a separate line.

Table 7-A, Stack Egress Point Information

Company Name or ID for the Egress Point (examples: Stack A; Boiler Stack; etc.)	Type Code*	Stack Egress Point Shape and Dimensions (in)(examples: round 10 inch ID; rectangular 14 X 16 inches; etc.)	Stack Egress Point Height from the Ground (ft)	Stack Temp. at Max. Capacity (F)	Stack Flow Rate at Max. Capacity (ACFM)	Minimum Distance to the Property Line (ft)
BIOMASS BUNKER 2	A	RECT. 2 FT X 3 FT	250	68	10,000	1,000

*Type codes for stack egress points:

A. vertical stack (unobstructed): There are no obstructions to upward flow in or on the stack such as a rain cap.
B. vertical stack (obstructed): There are obstructions to the upward flow, such as a rain cap, which prevents or inhibits the air flow in a vertical direction.
C. non-vertical stack: The stack directs the air flow in a direction which is not directly upward.

Complete Table 7-B below for each fugitive emissions egress point. List each individual egress point on a separate line. Refer to the description of the fugitive egress point type codes below the table for use in completing the type code column of the table. For air contaminant sources like roadways and storage piles, only the first 5 columns need to be completed. For an air contaminant source with multiple fugitive emissions egress points, include only the primary egress points.

Table 7-B, Fugitive Egress Point Information

Company ID for the Egress Point (examples; Garage Door B, Building C; Roof Monitor; etc.)	Type Code*	Egress Point Description (examples: garage door, 12 X 30 feet, west wall; outside gravel storage piles; etc.)	Fugitive Egress Point Height from the Ground (ft)	Minimum Distance to the Property Line (ft)	Exit Gas Temp. (F)

Section II - Specific Air Contaminant Source Information

*Type codes for fugitive egress point:

D. door or window
E. other opening in the building without a duct
F. no stack and no building enclosing the air contaminant source (e.g., roadways)

Complete Table 7-C below for each Stack Egress Point identified in Table 7-A above. In each case, use the dimensions of the largest nearby building, building segment or structure. List each individual egress point on a separate line. Use the same Company Name or ID for the Egress Point in Table 7-C that was used in Table 7-A. See the line by line PTI instructions for additional information.

Table 7-C, Egress Point Additional Information (Add rows as necessary)

Company ID or Name for the Egress Point	Building Height (ft)	Building Width (ft)	Building Length (ft)
BIOMASS BUNKER 2	200	100	150

8. Request for Federally Enforceable Limits

As part of this permit application, do you wish to propose voluntary restrictions to limit emissions in order to avoid specific requirements listed below, (i.e., are you requesting federally enforceable limits to obtain synthetic minor status)?

☐ yes
☒ no
☐ not sure - please contact me if this affects me

If yes, why are you requesting federally enforceable limits? Check all that apply.

a. ☐ to avoid being a major source (see OAC rule 3745-77-01)
b. ☐ to avoid being a major MACT source (see OAC rule 3745-31-01)
c. ☐ to avoid being a major modification (see OAC rule 3745-31-01)
d. ☐ to avoid being a major stationary source (see OAC rule 3745-31-01)
e. ☐ to avoid an air dispersion modeling requirement (see Engineering Guide # 69)
f. ☐ to avoid another requirement. Describe: _____

If you checked a., b. or d., please attach a facility-wide potential to emit (PTE) analysis (for each pollutant) and synthetic minor strategy to this application. (See line by line instructions for definition of PTE.) If you checked c., please attach a net emission change analysis to this application.

9. If this air contaminant source utilizes any continuous emissions monitoring equipment for indicating or demonstrating compliance, complete the following table. This does not include continuous parametric monitoring systems.

Company ID for Egress Point	Type of Monitor	Applicable performance specification (40 CFR 60, Appendix B)	Pollutant(s) Monitored

10. Do you wish to permit this air contaminant source as a portable source, allowing relocation within the state in accordance with OAC rule 3745-31-03 or OAC rule 3745-31-05?

Section II - Specific Air Contaminant Source Information

☐ yes - Note: notification requirements in rules cited above must be followed.
☒ no

11. The appropriate Emissions Activity Category (EAC) form(s) must be completed and attached for each air contaminant source. At least one complete EAC form must be submitted for each air contaminant source for the application to be considered complete. Refer to the list attached to the PTI instructions.

Section II - Specific Air Contaminant Source Information

NOTE: One copy of this section should be filled out for each air contaminant source covered by this PTI application. See the line by line PTI instructions for additional information.

1. Company identification (name for air contaminant source for which you are applying): BIOMASS BUNKER 3

2. List all equipment that are part of this air contaminant source: BIOMASS BUNKER 3

3. Air Contaminant Source Installation or Modification Schedule (must be completed regardless of date of installation or modification):

   When did/will you begin to install or modify the air contaminant source? (month/year) SECOND QUARTER 2008

   When did/will you begin to operate the air contaminant source? (month/year) THIRD QUARTER 2011 **OR** after issuance of PTI _____

4. Emissions Information: The following table requests information needed to determine the applicable requirements and the compliance status of this air contaminant source with those requirements. Suggestions for how to estimate emissions may be found in the instructions to the Emissions Activity Category (EAC) forms required with this application. If you need further assistance, contact your Ohio EPA permit representative.

   - If total potential emissions of HAPs or any Air Toxic is greater than 1 ton/yr, fill in the table for that (those) pollutant(s). For all other pollutants, if "Emissions before controls (max), lb/hr" multiplied by 24 hours/day is greater than 10 lb/day, fill in the table for that pollutant.
   - If you have no add-on control equipment, "Emissions before controls= will be the same as "Actual emissions"
   - Annual emissions should be based on operating 8760 hr/yr unless you are requesting operating restrictions to limit emissions in line # 8 or have described inherent limitations below.
   - If you use units other than lb/hr or ton/yr, specify the units used (e.g., gr/dscf, lb/ton charged, lb/MMBtu, ton/12-months).
   - Requested Allowable (ton/yr) is often equivalent to Potential to Emit (PTE) as defined in OAC rule 3745-31-01 and OAC rule 3745-77-01.

Pollutant	Emissions before controls (max) (lb/hr)	Actual emissions (lb/hr)	Actual emissions (ton/year)	Requested Allowable (lb/hr)	Requested Allowable (ton/year)
Particulate emissions (PE) (formerly particulate matter, PM)	40	0.43	1.9	0.43	1.9
PM_{10} (PM < 10 microns in diameter)	40	0.43	1.9	0.43	1.9
Sulfur dioxide (SO_2)	0	0	0	0	0
Nitrogen oxides (NO_x)	0	0	0	0	0
Carbon monoxide (CO)	0	0	0	0	0
Organic compounds (OC)	0	0	0	0	0
Volatile organic compounds (VOC)	0	0	0	0	0
Total HAPs	0	0	0	0	0
Highest single HAP:	0	0	0	0	0
Air Toxics (see instructions):	0	0	0	0	0

Provide your calculations as an attachment and explain how all process variables and emission factors were selected. Note the emissions factor(s) employed and document the origin. Example: AP-42, Table 4.4-3 (8/97); stack test, Method 5, 4/96; mass balance based on MSDS; etc.

Section II - Specific Air Contaminant Source Information

5. **Does this air contaminant source employ emissions control equipment?**

☒ **Yes** - fill out the applicable information below.

☐ **No** - proceed to item # 6.

Note: Pollutant abbreviations used below: Particulates = PE; Organic compounds = OC; Sulfur dioxide = SO_2; Nitrogen oxides = NOx; Carbon monoxide = CO

☐ **Cyclone/Multiclone**
Manufacturer: _____ Year installed: _____
What do you call this control equipment: _____
Pollutant(s) controlled: ☐ PE ☐ OC ☐ SO_2 ☐ NOx ☐ CO ☐ Other _____
Estimated capture efficiency (%): _____ Basis for efficiency: _____
Design control efficiency (%): _____ Basis for efficiency: _____
Type: ☐ Cyclone ☐ Multiclone ☐ Rotoclone ☐ Other _____
☐ This is the only control equipment on this air contaminant source
If no, this control equipment is: ☐ Primary ☐ Secondary ☐ Parallel
List any other air contaminant sources that are also vented to this control equipment:
_____

☒ **Fabric Filter/Baghouse**
Manufacturer: TO BE DETERMINED Year installed: NEW FACILITY
What do you call this control equipment: BUNKER FILTER 10
Pollutant(s) controlled: ☒ PE ☐ OC ☐ SO_2 ☐ NOx ☐ CO ☐ Other _____
Estimated capture efficiency (%):100 Basis for efficiency: ENGINEERING DESIGN
Design control efficiency (%):99.9 Basis for efficiency: LITERATURE
Operating pressure drop range (inches of water): Minimum: 3 Maximum: 6
Pressure type: ☐ Negative pressure ☒ Positive pressure
Fabric cleaning mechanism: ☐ Reverse air ☒ Pulse jet ☐ Shaker ☐ Other _____
☐ Lime injection or fabric coating agent used: Type: _____ Feed rate: _____
☒ This is the only control equipment on this air contaminant source
If no, this control equipment is: ☐ Primary ☐ Secondary ☐ Parallel
List any other air contaminant sources that are also vented to this control equipment:
_____

☐ **Wet Scrubber**
Manufacturer: _____ Year installed: _____
What do you call this control equipment: _____
Pollutant(s) controlled: ☐ PE ☐ OC ☐ SO_2 ☐ NOx ☐ CO ☐ Other _____
Estimated capture efficiency (%): _____ Basis for efficiency: _____
Design control efficiency (%): _____ Basis for efficiency: _____
Type: ☐ Spray chamber ☐ Packed bed ☐ Impingement ☐ Venturi ☐ Other _____
Operating pressure drop range (inches of water): Minimum: _____ Maximum: _____
pH range for scrubbing liquid: Minimum: _____ Maximum: _____
Scrubbing liquid flow rate (gal/min): _____
Is scrubber liquid recirculated? ☐ Yes ☐ No
Water supply pressure (psig): _____ NOTE: This item for spray chambers only.
☐ This is the only control equipment on this air contaminant source
If no, this control equipment is: ☐ Primary ☐ Secondary ☐ Parallel
List any other air contaminant sources that are also vented to this control equipment:
_____

☐ **Electrostatic Precipitator**
Manufacturer: _____ Year installed: _____
What do you call this control equipment: _____
Pollutant(s) controlled: ☐ PE ☐ OC ☐ SO_2 ☐ NOx ☐ CO ☐ Other _____
Estimated capture efficiency (%): _____ Basis for efficiency: _____
Design control efficiency (%): _____ Basis for efficiency: _____

Section II - Specific Air Contaminant Source Information

Type: ☐ Plate-wire ☐ Flat-plate ☐ Tubular ☐ Wet ☐ Other _____
Number of operating fields: _____

☐ This is the only control equipment on this air contaminant source
If no, this control equipment is: ☐ Primary ☐ Secondary ☐ Parallel
List any other air contaminant sources that are also vented to this control equipment:
_____

☐ **Concentrator**
Manufacturer: _____ Year installed: _____
What do you call this control equipment: _____
Pollutant(s) controlled: ☐ PE ☐ OC ☐ SO_2 ☐ NOx ☐ CO ☐ Other _____
Estimated capture efficiency (%):_____ Basis for efficiency: _____
Design regeneration cycle time (minutes): _____
Minimum desorption air stream temperature (°F): _____
Rotational rate (revolutions/hour): _____
☐ This is the only control equipment on this air contaminant source
If no, this control equipment is: ☐ Primary ☐ Secondary ☐ Parallel
List any other air contaminant sources that are also vented to this control equipment:
_____

☐ **Catalytic Incinerator**
Manufacturer: _____ Year installed: _____
What do you call this control equipment: _____
Pollutant(s) controlled: ☐ PE ☐ OC ☐ SO_2 ☐ NOx ☐ CO ☐ Other _____
Estimated capture efficiency (%):_____ Basis for efficiency: _____
Design control efficiency (%):_____ Basis for efficiency: _____
Minimum inlet gas temperature (°F): _____
Combustion chamber residence time (seconds): _____
Minimum temperature difference (°F) across catalyst during air contaminant source operation: _____
☐ This is the only control equipment on this air contaminant source
If no, this control equipment is: ☐ Primary ☐ Secondary ☐ Parallel
List any other air contaminant sources that are also vented to this control equipment:
_____

☐ **Thermal Incinerator/Thermal Oxidizer**
Manufacturer: _____ Year installed: _____
What do you call this control equipment: _____
Pollutant(s) controlled: ☐ PE ☐ OC ☐ SO_2 ☐ NOx ☐ CO ☐ Other _____
Estimated capture efficiency (%):_____ Basis for efficiency: _____
Design control efficiency (%):_____ Basis for efficiency: _____
Minimum operating temperature (°F) and location: _____ (See line by line instructions.)
Combustion chamber residence time (seconds): _____
☐ This is the only control equipment on this air contaminant source
If no, this control equipment is: ☐ Primary ☐ Secondary ☐ Parallel
List any other air contaminant sources that are also vented to this control equipment:
_____

☐ **Flare**
Manufacturer: _____ Year installed: _____
What do you call this control equipment: _____
Pollutant(s) controlled: ☐ PE ☐ OC ☐ SO_2 ☐ NOx ☐ CO ☐ Other _____
Estimated capture efficiency (%):_____ Basis for efficiency: _____
Design control efficiency (%):_____ Basis for efficiency: _____
Type: ☐ Enclosed ☐ Elevated (open)
Ignition device: ☐ Electric arc ☐ Pilot flame
Flame presence sensor: ☐ Yes ☐ No
☐ This is the only control equipment on this air contaminant source
If no, this control equipment is: ☐ Primary ☐ Secondary ☐ Parallel
List any other air contaminant sources that are also vented to this control equipment:

Section II - Specific Air Contaminant Source Information

☐ **Condenser**
Manufacturer: _____ Year installed: _____
What do you call this control equipment: _____
Pollutant(s) controlled: ☐ PE ☐ OC ☐ SO_2 ☐ NOx ☐ CO ☐ Other _____
Estimated capture efficiency (%):_____ Basis for efficiency: _____
Design control efficiency (%):_____ Basis for efficiency: _____

Type: ☐ Indirect contact ☐ Direct contact
Maximum exhaust gas temperature (°F) during air contaminant source operation: _____
Coolant type: _____
Design coolant temperature (°F): Minimum _____ Maximum _____
Design coolant flow rate (gpm): _____
☐ This is the only control equipment on this air contaminant source
If no, this control equipment is: ☐ Primary ☐ Secondary ☐ Parallel
List any other air contaminant sources that are also vented to this control equipment:
_____

☐ **Carbon Absorber**
Manufacturer: _____ Year installed: _____
What do you call this control equipment: _____
Pollutant(s) controlled: ☐ PE ☐ OC ☐ SO_2 ☐ NOx ☐ CO ☐ Other _____
Estimated capture efficiency (%):_____ Basis for efficiency: _____
Design control efficiency (%):_____ Basis for efficiency: _____
Type: ☐ On-site regenerative ☐ Disposable
Maximum design outlet organic compound concentration (ppmv): _____
Carbon replacement frequency or regeneration cycle time (specify units): _____
Maximum temperature of the carbon bed, after regeneration (including any cooling cycle): _____
☐ This is the only control equipment on this air contaminant source
If no, this control equipment is: ☐ Primary ☐ Secondary ☐ Parallel
List any other air contaminant sources that are also vented to this control equipment:
_____

☐ **Dry Scrubber**
Manufacturer: _____ Year installed: _____
What do you call this control equipment: _____
Pollutant(s) controlled: ☐ PE ☐ OC ☐ SO_2 ☐ NOx ☐ CO ☐ Other _____
Estimated capture efficiency (%):_____ Basis for efficiency: _____
Design control efficiency (%):_____ Basis for efficiency: _____
Reagent(s) used: Type: _____ Injection rate(s): _____
Operating pressure drop range (inches of water): Minimum: _____ Maximum: _____
☐ This is the only control equipment on this air contaminant source
If no, this control equipment is: ☐ Primary ☐ Secondary ☐ Parallel
List any other air contaminant sources that are also vented to this control equipment:
_____

☐ **Paint booth filter**
Type: ☐ Paper ☐ Fiberglass ☐ Water curtain ☐ Other _____
Design control efficiency (%):_____ Basis for efficiency: _____

☐ **Other**, describe _____
Manufacturer: _____ Year installed: _____
What do you call this control equipment: _____
Pollutant(s) controlled: ☐ PE ☐ OC ☐ SO_2 ☐ NOx ☐ CO ☐ Other
Estimated capture efficiency (%): _____ Basis for efficiency: _____

Design control efficiency (%):_____ Basis for efficiency: _____
☐ This is the only control equipment on this air contaminant source
If no, this control equipment is: ☐ Primary ☐ Secondary ☐ Parallel

Section II - Specific Air Contaminant Source Information

List any other air contaminant sources that are also vented to this control equipment:

_____

6. Attach a Process or Activity Flow Diagram to this application for each air contaminant source included in the application. The diagram should indicate their relationships to one another. See the line by line PTI instructions for additional information.

7. Emissions egress point(s) information: PTIs which allow total emissions in excess of the thresholds listed below will be subject to an air quality modeling analysis. This analysis is to assure that the impact from the requested project will not exceed Ohio=s Acceptable Incremental Impacts for criteria pollutants and/or Maximum Allowable Ground Level Concentrations (MAGLC) for air toxics. Permit requests that would have unacceptable impacts can not be approved as proposed. See the line by line PTI instructions for additional information.

   Complete the tables below if the requested allowable annual emission rate for this PTI exceeds any of the following:

   - Particulate Matter (PM10): 10 tons per year
   - Sulfur Dioxide (SO2): 25 tons per year
   - Nitrogen Oxides (NOx): 25 tons per year
   - Carbon Monoxide (CO): 100 tons per year
   - Air Toxic: 1 ton per year. An air toxic is any air pollutant for which the American Council of Governmental Industrial Hygienists (ACGIH) has established a Threshold Limit Value (TLV).

   Complete Table 7-A below for each stack emissions egress point. An egress point is a point at which emissions from an air contaminant source are released into the ambient (outside) air. List each individual egress point on a separate line.

Table 7-A, Stack Egress Point Information

Company Name or ID for the Egress Point (examples: Stack A; Boiler Stack; etc.)	Type Code*	Stack Egress Point Shape and Dimensions (in)(examples: round 10 inch ID; rectangular 14 X 16 inches; etc.)	Stack Egress Point Height from the Ground (ft)	Stack Temp. at Max. Capacity (F)	Stack Flow Rate at Max. Capacity (ACFM)	Minimum Distance to the Property Line (ft)
BIOMASS BUNKER 3	A	RECT. 2 FT X 3 FT	250	68	10,000	1,000

*Type codes for stack egress points:

A. vertical stack (unobstructed): There are no obstructions to upward flow in or on the stack such as a rain cap.
B. vertical stack (obstructed): There are obstructions to the upward flow, such as a rain cap, which prevents or inhibits the air flow in a vertical direction.
C. non-vertical stack: The stack directs the air flow in a direction which is not directly upward.

Complete Table 7-B below for each fugitive emissions egress point. List each individual egress point on a separate line. Refer to the description of the fugitive egress point type codes below the table for use in completing the type code column of the table. For air contaminant sources like roadways and storage piles, only the first 5 columns need to be completed. For an air contaminant source with multiple fugitive emissions egress points, include only the primary egress points.

Table 7-B, Fugitive Egress Point Information

Company ID for the Egress Point (examples; Garage Door B, Building C; Roof Monitor; etc.)	Type Code*	Egress Point Description (examples: garage door, 12 X 30 feet, west wall; outside gravel storage piles; etc.)	Fugitive Egress Point Height from the Ground (ft)	Minimum Distance to the Property Line (ft)	Exit Gas Temp. (F)

Section II - Specific Air Contaminant Source Information

*Type codes for fugitive egress point:

D. door or window
E. other opening in the building without a duct
F. no stack and no building enclosing the air contaminant source (e.g., roadways)

Complete Table 7-C below for each Stack Egress Point identified in Table 7-A above. In each case, use the dimensions of the largest nearby building, building segment or structure. List each individual egress point on a separate line. Use the same Company Name or ID for the Egress Point in Table 7-C that was used in Table 7-A. See the line by line PTI instructions for additional information.

Table 7-C, Egress Point Additional Information (Add rows as necessary)

Company ID or Name for the Egress Point	Building Height (ft)	Building Width (ft)	Building Length (ft)
BIOMASS BUNKER 3	200	100	150

8. Request for Federally Enforceable Limits

As part of this permit application, do you wish to propose voluntary restrictions to limit emissions in order to avoid specific requirements listed below, (i.e., are you requesting federally enforceable limits to obtain synthetic minor status)?

☐ yes
☒ no
☐ not sure - please contact me if this affects me

If yes, why are you requesting federally enforceable limits? Check all that apply.

a. ☐ to avoid being a major source (see OAC rule 3745-77-01)
b. ☐ to avoid being a major MACT source (see OAC rule 3745-31-01)
c. ☐ to avoid being a major modification (see OAC rule 3745-31-01)
d. ☐ to avoid being a major stationary source (see OAC rule 3745-31-01)
e. ☐ to avoid an air dispersion modeling requirement (see Engineering Guide # 69)
f. ☐ to avoid another requirement. Describe: _____

If you checked a., b. or d., please attach a facility-wide potential to emit (PTE) analysis (for each pollutant) and synthetic minor strategy to this application. (See line by line instructions for definition of PTE.) If you checked c., please attach a net emission change analysis to this application.

9. If this air contaminant source utilizes any continuous emissions monitoring equipment for indicating or demonstrating compliance, complete the following table. This does not include continuous parametric monitoring systems.

Company ID for Egress Point	Type of Monitor	Applicable performance specification (40 CFR 60, Appendix B)	Pollutant(s) Monitored

10. Do you wish to permit this air contaminant source as a portable source, allowing relocation within the state in accordance with OAC rule 3745-31-03 or OAC rule 3745-31-05?

Section II - Specific Air Contaminant Source Information

☐ yes - Note: notification requirements in rules cited above must be followed.
☒ no

11. The appropriate Emissions Activity Category (EAC) form(s) must be completed and attached for each air contaminant source. At least one complete EAC form must be submitted for each air contaminant source for the application to be considered complete. Refer to the list attached to the PTI instructions.

Section II - Specific Air Contaminant Source Information

NOTE: One copy of this section should be filled out for each air contaminant source covered by this PTI application. See the line by line PTI instructions for additional information.

1. Company identification (name for air contaminant source for which you are applying): FILLING VESSEL VENT 1

2. List all equipment that are part of this air contaminant source: FILLING VESSEL VENT 1

3. Air Contaminant Source Installation or Modification Schedule (must be completed regardless of date of installation or modification):

   When did/will you begin to install or modify the air contaminant source? (month/year) SECOND QUARTER 2008

   When did/will you begin to operate the air contaminant source? (month/year) THIRD QUARTER 2011 **OR** after issuance of PTI _____

4. Emissions Information: The following table requests information needed to determine the applicable requirements and the compliance status of this air contaminant source with those requirements. Suggestions for how to estimate emissions may be found in the instructions to the Emissions Activity Category (EAC) forms required with this application. If you need further assistance, contact your Ohio EPA permit representative.

   - If total potential emissions of HAPs or any Air Toxic is greater than 1 ton/yr, fill in the table for that (those) pollutant(s). For all other pollutants, if "Emissions before controls (max), lb/hr" multiplied by 24 hours/day is greater than 10 lb/day, fill in the table for that pollutant.
   - If you have no add-on control equipment, "Emissions before controls= will be the same as "Actual emissions"
   - Annual emissions should be based on operating 8760 hr/yr unless you are requesting operating restrictions to limit emissions in line # 8 or have described inherent limitations below.
   - If you use units other than lb/hr or ton/yr, specify the units used (e.g., gr/dscf, lb/ton charged, lb/MMBtu, ton/12-months).
   - Requested Allowable (ton/yr) is often equivalent to Potential to Emit (PTE) as defined in OAC rule 3745-31-01 and OAC rule 3745-77-01.

Pollutant	Emissions before controls (max) (lb/hr)	Actual emissions (lb/hr)	Actual emissions (ton/year)	Requested Allowable (lb/hr)	Requested Allowable (ton/year)
Particulate emissions (PE) (formerly particulate matter, PM)	41.66	0.07	0.32	0.07	0.32
PM_{10} (PM < 10 microns in diameter)	41.66	0.07	0.32	0.07	0.32
Sulfur dioxide (SO_2)	0	0	0	0	0
Nitrogen oxides (NO_x)	0	0	0	0	0
Carbon monoxide (CO)	0	0	0	0	0
Organic compounds (OC)	0	0	0	0	0
Volatile organic compounds (VOC)	0	0	0	0	0
Total HAPs	0	0	0	0	0
Highest single HAP:	0	0	0	0	0
Air Toxics (see instructions):	0	0	0	0	0

Provide your calculations as an attachment and explain how all process variables and emission factors were selected. Note the emissions factor(s) employed and document the origin. Example: AP-42, Table 4.4-3 (8/97); stack test, Method 5, 4/96; mass balance based on MSDS; etc.

Section II - Specific Air Contaminant Source Information

5. **Does this air contaminant source employ emissions control equipment?**

☒ **Yes** - fill out the applicable information below.

☐ **No** - proceed to item # 6.

Note: Pollutant abbreviations used below: Particulates = PE; Organic compounds = OC; Sulfur dioxide = SO_2; Nitrogen oxides = NOx; Carbon monoxide = CO

☐ **Cyclone/Multiclone**
Manufacturer: _____ Year installed: _____
What do you call this control equipment: _____
Pollutant(s) controlled: ☐ PE ☐ OC ☐ SO_2 ☐ NOx ☐ CO ☐ Other _____
Estimated capture efficiency (%): _____ Basis for efficiency: _____
Design control efficiency (%): _____ Basis for efficiency: _____
Type: ☐ Cyclone ☐ Multiclone ☐ Rotoclone ☐ Other _____
☐ This is the only control equipment on this air contaminant source
If no, this control equipment is: ☐ Primary ☐ Secondary ☐ Parallel
List any other air contaminant sources that are also vented to this control equipment:
_____

☒ **Fabric Filter/Baghouse**
Manufacturer: TO BE DETERMINED Year installed: NEW FACILITY
What do you call this control equipment: FILLING VESSEL FILTER 1
Pollutant(s) controlled: ☒ PE ☐ OC ☐ SO_2 ☐ NOx ☐ CO ☐ Other _____
Estimated capture efficiency (%):100 Basis for efficiency: ENGINEERING DESIGN
Design control efficiency (%):99.9 Basis for efficiency: LITERATURE
Operating pressure drop range (inches of water): Minimum: 3 Maximum: 6
Pressure type: ☐ Negative pressure ☒ Positive pressure
Fabric cleaning mechanism: ☐ Reverse air ☒ Pulse jet ☐ Shaker ☐ Other _____
☐ Lime injection or fabric coating agent used: Type: _____ Feed rate: _____
☒ This is the only control equipment on this air contaminant source
If no, this control equipment is: ☐ Primary ☐ Secondary ☐ Parallel
List any other air contaminant sources that are also vented to this control equipment:
_____

☐ **Wet Scrubber**
Manufacturer: _____ Year installed: _____
What do you call this control equipment: _____
Pollutant(s) controlled: ☐ PE ☐ OC ☐ SO_2 ☐ NOx ☐ CO ☐ Other _____
Estimated capture efficiency (%): _____ Basis for efficiency: _____
Design control efficiency (%): _____ Basis for efficiency: _____
Type: ☐ Spray chamber ☐ Packed bed ☐ Impingement ☐ Venturi ☐ Other _____
Operating pressure drop range (inches of water): Minimum: _____ Maximum: _____
pH range for scrubbing liquid: Minimum: _____ Maximum: _____
Scrubbing liquid flow rate (gal/min): _____
Is scrubber liquid recirculated? ☐ Yes ☐ No
Water supply pressure (psig): _____ NOTE: This item for spray chambers only.
☐ This is the only control equipment on this air contaminant source
If no, this control equipment is: ☐ Primary ☐ Secondary ☐ Parallel
List any other air contaminant sources that are also vented to this control equipment:
_____

☐ **Electrostatic Precipitator**
Manufacturer: _____ Year installed: _____
What do you call this control equipment: _____
Pollutant(s) controlled: ☐ PE ☐ OC ☐ SO_2 ☐ NOx ☐ CO ☐ Other _____
Estimated capture efficiency (%): _____ Basis for efficiency: _____
Design control efficiency (%): _____ Basis for efficiency: _____

Section II - Specific Air Contaminant Source Information

Type: ☐ Plate-wire ☐ Flat-plate ☐ Tubular ☐ Wet ☐ Other _____
Number of operating fields: _____

☐ This is the only control equipment on this air contaminant source
If no, this control equipment is: ☐ Primary ☐ Secondary ☐ Parallel
List any other air contaminant sources that are also vented to this control equipment:
_____

☐ **Concentrator**
Manufacturer: _____ Year installed: _____
What do you call this control equipment: _____
Pollutant(s) controlled: ☐ PE ☐ OC ☐ SO_2 ☐ NOx ☐ CO ☐ Other _____
Estimated capture efficiency (%):_____ Basis for efficiency: _____
Design regeneration cycle time (minutes): _____
Minimum desorption air stream temperature (°F): _____
Rotational rate (revolutions/hour): _____
☐ This is the only control equipment on this air contaminant source
If no, this control equipment is: ☐ Primary ☐ Secondary ☐ Parallel
List any other air contaminant sources that are also vented to this control equipment:
_____

☐ **Catalytic Incinerator**
Manufacturer: _____ Year installed: _____
What do you call this control equipment: _____
Pollutant(s) controlled: ☐ PE ☐ OC ☐ SO_2 ☐ NOx ☐ CO ☐ Other _____
Estimated capture efficiency (%):_____ Basis for efficiency: _____
Design control efficiency (%):_____ Basis for efficiency: _____
Minimum inlet gas temperature (°F): _____
Combustion chamber residence time (seconds): _____
Minimum temperature difference (°F) across catalyst during air contaminant source operation: _____
☐ This is the only control equipment on this air contaminant source
If no, this control equipment is: ☐ Primary ☐ Secondary ☐ Parallel
List any other air contaminant sources that are also vented to this control equipment:
_____

☐ **Thermal Incinerator/Thermal Oxidizer**
Manufacturer: _____ Year installed: _____
What do you call this control equipment: _____
Pollutant(s) controlled: ☐ PE ☐ OC ☐ SO_2 ☐ NOx ☐ CO ☐ Other _____
Estimated capture efficiency (%):_____ Basis for efficiency: _____
Design control efficiency (%):_____ Basis for efficiency: _____
Minimum operating temperature (°F) and location: _____ (See line by line instructions.)
Combustion chamber residence time (seconds): _____
☐ This is the only control equipment on this air contaminant source
If no, this control equipment is: ☐ Primary ☐ Secondary ☐ Parallel
List any other air contaminant sources that are also vented to this control equipment:
_____

☐ **Flare**
Manufacturer: _____ Year installed: _____
What do you call this control equipment: _____
Pollutant(s) controlled: ☐ PE ☐ OC ☐ SO_2 ☐ NOx ☐ CO ☐ Other _____
Estimated capture efficiency (%):_____ Basis for efficiency: _____
Design control efficiency (%):_____ Basis for efficiency: _____
Type: ☐ Enclosed ☐ Elevated (open)
Ignition device: ☐ Electric arc ☐ Pilot flame
Flame presence sensor: ☐ Yes ☐ No
☐ This is the only control equipment on this air contaminant source
If no, this control equipment is: ☐ Primary ☐ Secondary ☐ Parallel
List any other air contaminant sources that are also vented to this control equipment:

Section II - Specific Air Contaminant Source Information

☐ **Condenser**
Manufacturer: _____ Year installed: _____
What do you call this control equipment: _____
Pollutant(s) controlled: ☐ PE ☐ OC ☐ SO_2 ☐ NOx ☐ CO ☐ Other _____
Estimated capture efficiency (%):_____ Basis for efficiency: _____
Design control efficiency (%):_____ Basis for efficiency: _____

Type: ☐ Indirect contact ☐ Direct contact
Maximum exhaust gas temperature (°F) during air contaminant source operation: _____
Coolant type: _____
Design coolant temperature (°F): Minimum _____ Maximum _____
Design coolant flow rate (gpm): _____
☐ This is the only control equipment on this air contaminant source
If no, this control equipment is: ☐ Primary ☐ Secondary ☐ Parallel
List any other air contaminant sources that are also vented to this control equipment:
_____

☐ **Carbon Absorber**
Manufacturer: _____ Year installed: _____
What do you call this control equipment: _____
Pollutant(s) controlled: ☐ PE ☐ OC ☐ SO_2 ☐ NOx ☐ CO ☐ Other _____
Estimated capture efficiency (%):_____ Basis for efficiency: _____
Design control efficiency (%):_____ Basis for efficiency: _____
Type: ☐ On-site regenerative ☐ Disposable
Maximum design outlet organic compound concentration (ppmv): _____
Carbon replacement frequency or regeneration cycle time (specify units): _____
Maximum temperature of the carbon bed, after regeneration (including any cooling cycle): _____
☐ This is the only control equipment on this air contaminant source
If no, this control equipment is: ☐ Primary ☐ Secondary ☐ Parallel
List any other air contaminant sources that are also vented to this control equipment:
_____

☐ **Dry Scrubber**
Manufacturer: _____ Year installed: _____
What do you call this control equipment: _____
Pollutant(s) controlled: ☐ PE ☐ OC ☐ SO_2 ☐ NOx ☐ CO ☐ Other _____
Estimated capture efficiency (%):_____ Basis for efficiency: _____
Design control efficiency (%):_____ Basis for efficiency: _____
Reagent(s) used: Type: _____ Injection rate(s): _____
Operating pressure drop range (inches of water): Minimum: _____ Maximum: _____
☐ This is the only control equipment on this air contaminant source
If no, this control equipment is: ☐ Primary ☐ Secondary ☐ Parallel
List any other air contaminant sources that are also vented to this control equipment:
_____

☐ **Paint booth filter**
Type: ☐ Paper ☐ Fiberglass ☐ Water curtain ☐ Other _____
Design control efficiency (%):_____ Basis for efficiency: _____

☐ **Other**, describe _____
Manufacturer: _____ Year installed: _____
What do you call this control equipment: _____
Pollutant(s) controlled: ☐ PE ☐ OC ☐ SO_2 ☐ NOx ☐ CO ☐ Other
Estimated capture efficiency (%): _____ Basis for efficiency: _____

Design control efficiency (%):_____ Basis for efficiency: _____
☐ This is the only control equipment on this air contaminant source
If no, this control equipment is: ☐ Primary ☐ Secondary ☐ Parallel

Section II - Specific Air Contaminant Source Information

List any other air contaminant sources that are also vented to this control equipment:

_____

6. Attach a Process or Activity Flow Diagram to this application for each air contaminant source included in the application. The diagram should indicate their relationships to one another. See the line by line PTI instructions for additional information.

7. Emissions egress point(s) information: PTIs which allow total emissions in excess of the thresholds listed below will be subject to an air quality modeling analysis. This analysis is to assure that the impact from the requested project will not exceed Ohio=s Acceptable Incremental Impacts for criteria pollutants and/or Maximum Allowable Ground Level Concentrations (MAGLC) for air toxics. Permit requests that would have unacceptable impacts can not be approved as proposed. See the line by line PTI instructions for additional information.

   Complete the tables below if the requested allowable annual emission rate for this PTI exceeds any of the following:

   - Particulate Matter (PM10): 10 tons per year
   - Sulfur Dioxide (SO2): 25 tons per year
   - Nitrogen Oxides (NOx): 25 tons per year
   - Carbon Monoxide (CO): 100 tons per year
   - Air Toxic: 1 ton per year. An air toxic is any air pollutant for which the American Council of Governmental Industrial Hygienists (ACGIH) has established a Threshold Limit Value (TLV).

   Complete Table 7-A below for each stack emissions egress point. An egress point is a point at which emissions from an air contaminant source are released into the ambient (outside) air. List each individual egress point on a separate line.

Table 7-A, Stack Egress Point Information

Company Name or ID for the Egress Point (examples: Stack A; Boiler Stack; etc.)	Type Code *	Stack Egress Point Shape and Dimensions (in)(examples: round 10 inch ID; rectangular 14 X 16 inches; etc.)	Stack Egress Point Height from the Ground (ft)	Stack Temp. at Max. Capacity (F)	Stack Flow Rate at Max. Capacity (ACFM)	Minimum Distance to the Property Line (ft)
FILLING VESSEL VENT 1	A	Rectangular: 2 FT X 4 FT	250	200	2,150	1,000

*Type codes for stack egress points:

A. vertical stack (unobstructed): There are no obstructions to upward flow in or on the stack such as a rain cap.
B. vertical stack (obstructed): There are obstructions to the upward flow, such as a rain cap, which prevents or inhibits the air flow in a vertical direction.
C. non-vertical stack: The stack directs the air flow in a direction which is not directly upward.

Complete Table 7-B below for each fugitive emissions egress point. List each individual egress point on a separate line. Refer to the description of the fugitive egress point type codes below the table for use in completing the type code column of the table. For air contaminant sources like roadways and storage piles, only the first 5 columns need to be completed. For an air contaminant source with multiple fugitive emissions egress points, include only the primary egress points.

Table 7-B, Fugitive Egress Point Information

Company ID for the Egress Point (examples; Garage Door B, Building C; Roof Monitor; etc.)	Type Code*	Egress Point Description (examples: garage door, 12 X 30 feet, west wall; outside gravel storage piles; etc.)	Fugitive Egress Point Height from the Ground (ft)	Minimum Distance to the Property Line (ft)	Exit Gas Temp. (F)

*Type codes for fugitive egress point:

Section II - Specific Air Contaminant Source Information

D. door or window
E. other opening in the building without a duct
F. no stack and no building enclosing the air contaminant source (e.g., roadways)

Complete Table 7-C below for each Stack Egress Point identified in Table 7-A above. In each case, use the dimensions of the largest nearby building, building segment or structure. List each individual egress point on a separate line. Use the same Company Name or ID for the Egress Point in Table 7-C that was used in Table 7-A. See the line by line PTI instructions for additional information.

Table 7-C, Egress Point Additional Information (Add rows as necessary)

Company ID or Name for the Egress Point	Building Height (ft)	Building Width (ft)	Building Length (ft)
FILLING VESSEL VENT 1	200	70	250

8. Request for Federally Enforceable Limits

As part of this permit application, do you wish to propose voluntary restrictions to limit emissions in order to avoid specific requirements listed below, (i.e., are you requesting federally enforceable limits to obtain synthetic minor status)?

☐ yes
☒ no
☐ not sure - please contact me if this affects me

If yes, why are you requesting federally enforceable limits? Check all that apply.

a. ☐ to avoid being a major source (see OAC rule 3745-77-01)
b. ☐ to avoid being a major MACT source (see OAC rule 3745-31-01)
c. ☐ to avoid being a major modification (see OAC rule 3745-31-01)
d. ☐ to avoid being a major stationary source (see OAC rule 3745-31-01)
e. ☐ to avoid an air dispersion modeling requirement (see Engineering Guide # 69)
f. ☐ to avoid another requirement. Describe: _____

If you checked a., b. or d., please attach a facility-wide potential to emit (PTE) analysis (for each pollutant) and synthetic minor strategy to this application. (See line by line instructions for definition of PTE.) If you checked c., please attach a net emission change analysis to this application.

9. If this air contaminant source utilizes any continuous emissions monitoring equipment for indicating or demonstrating compliance, complete the following table. This does not include continuous parametric monitoring systems.

Company ID for Egress Point	Type of Monitor	Applicable performance specification (40 CFR 60, Appendix B)	Pollutant(s) Monitored

10. Do you wish to permit this air contaminant source as a portable source, allowing relocation within the state in accordance with OAC rule 3745-31-03 or OAC rule 3745-31-05?

☐ yes - Note: notification requirements in rules cited above must be followed.
☒ no

Section II - Specific Air Contaminant Source Information

11. The appropriate Emissions Activity Category (EAC) form(s) must be completed and attached for each air contaminant source. At least one complete EAC form must be submitted for each air contaminant source for the application to be considered complete. Refer to the list attached to the PTI instructions.

Section II - Specific Air Contaminant Source Information

NOTE: One copy of this section should be filled out for each air contaminant source covered by this PTI application. See the line by line PTI instructions for additional information.

1. Company identification (name for air contaminant source for which you are applying): FILLING VESSEL VENT 2

2. List all equipment that are part of this air contaminant source: FILLING VESSEL VENT 2

3. Air Contaminant Source Installation or Modification Schedule (must be completed regardless of date of installation or modification):

   When did/will you begin to install or modify the air contaminant source? (month/year) SECOND QUARTER 2008

   When did/will you begin to operate the air contaminant source? (month/year) THIRD QUARTER 2011 **OR** after issuance of PTI _____

4. Emissions Information: The following table requests information needed to determine the applicable requirements and the compliance status of this air contaminant source with those requirements. Suggestions for how to estimate emissions may be found in the instructions to the Emissions Activity Category (EAC) forms required with this application. If you need further assistance, contact your Ohio EPA permit representative.

   - If total potential emissions of HAPs or any Air Toxic is greater than 1 ton/yr, fill in the table for that (those) pollutant(s). For all other pollutants, if "Emissions before controls (max), lb/hr" multiplied by 24 hours/day is greater than 10 lb/day, fill in the table for that pollutant.
   - If you have no add-on control equipment, "Emissions before controls= will be the same as "Actual emissions"
   - Annual emissions should be based on operating 8760 hr/yr unless you are requesting operating restrictions to limit emissions in line # 8 or have described inherent limitations below.
   - If you use units other than lb/hr or ton/yr, specify the units used (e.g., gr/dscf, lb/ton charged, lb/MMBtu, ton/12-months).
   - Requested Allowable (ton/yr) is often equivalent to Potential to Emit (PTE) as defined in OAC rule 3745-31-01 and OAC rule 3745-77-01.

Pollutant	Emissions before controls (max) (lb/hr)	Actual emissions (lb/hr)	Actual emissions (ton/year)	Requested Allowable (lb/hr)	Requested Allowable (ton/year)
Particulate emissions (PE) (formerly particulate matter, PM)	41.66	0.07	0.32	0.07	0.32
PM_{10} (PM < 10 microns in diameter)	41.66	0.07	0.32	0.07	0.32
Sulfur dioxide (SO_2)	0	0	0	0	0
Nitrogen oxides (NO_x)	0	0	0	0	0
Carbon monoxide (CO)	0	0	0	0	0
Organic compounds (OC)	0	0	0	0	0
Volatile organic compounds (VOC)	0	0	0	0	0
Total HAPs	0	0	0	0	0
Highest single HAP:	0	0	0	0	0
Air Toxics (see instructions):	0	0	0	0	0

Provide your calculations as an attachment and explain how all process variables and emission factors were selected. Note the emissions factor(s) employed and document the origin. Example: AP-42, Table 4.4-3 (8/97); stack test, Method 5, 4/96; mass balance based on MSDS; etc.

Section II - Specific Air Contaminant Source Information

5. **Does this air contaminant source employ emissions control equipment?**

☒ **Yes** - fill out the applicable information below.

☐ **No** - proceed to item # 6.

Note: Pollutant abbreviations used below: Particulates = PE; Organic compounds = OC; Sulfur dioxide = SO_2; Nitrogen oxides = NOx; Carbon monoxide = CO

☐ **Cyclone/Multiclone**
Manufacturer: _____ Year installed: _____
What do you call this control equipment: _____
Pollutant(s) controlled: ☐ PE ☐ OC ☐ SO_2 ☐ NOx ☐ CO ☐ Other _____
Estimated capture efficiency (%): _____ Basis for efficiency: _____
Design control efficiency (%): _____ Basis for efficiency: _____
Type: ☐ Cyclone ☐ Multiclone ☐ Rotoclone ☐ Other _____
☐ This is the only control equipment on this air contaminant source
If no, this control equipment is: ☐ Primary ☐ Secondary ☐ Parallel
List any other air contaminant sources that are also vented to this control equipment:
_____

☒ **Fabric Filter/Baghouse**
Manufacturer: TO BE DETERMINED Year installed: NEW FACILITY
What do you call this control equipment: FILLING VESSEL FILTER 2
Pollutant(s) controlled: ☒ PE ☐ OC ☐ SO_2 ☐ NOx ☐ CO ☐ Other _____
Estimated capture efficiency (%):100 Basis for efficiency: ENGINEERING DESIGN
Design control efficiency (%):99.9 Basis for efficiency: LITERATURE
Operating pressure drop range (inches of water): Minimum: 3 Maximum: 6
Pressure type: ☐ Negative pressure ☒ Positive pressure
Fabric cleaning mechanism: ☐ Reverse air ☒ Pulse jet ☐ Shaker ☐ Other _____
☐ Lime injection or fabric coating agent used: Type: _____ Feed rate: _____
☒ This is the only control equipment on this air contaminant source
If no, this control equipment is: ☐ Primary ☐ Secondary ☐ Parallel
List any other air contaminant sources that are also vented to this control equipment:
_____

☐ **Wet Scrubber**
Manufacturer: _____ Year installed: _____
What do you call this control equipment: _____
Pollutant(s) controlled: ☐ PE ☐ OC ☐ SO_2 ☐ NOx ☐ CO ☐ Other _____
Estimated capture efficiency (%): _____ Basis for efficiency: _____
Design control efficiency (%): _____ Basis for efficiency: _____
Type: ☐ Spray chamber ☐ Packed bed ☐ Impingement ☐ Venturi ☐ Other _____
Operating pressure drop range (inches of water): Minimum: _____ Maximum: _____
pH range for scrubbing liquid: Minimum: _____ Maximum: _____
Scrubbing liquid flow rate (gal/min): _____
Is scrubber liquid recirculated? ☐ Yes ☐ No
Water supply pressure (psig): _____ NOTE: This item for spray chambers only.
☐ This is the only control equipment on this air contaminant source
If no, this control equipment is: ☐ Primary ☐ Secondary ☐ Parallel
List any other air contaminant sources that are also vented to this control equipment:
_____

☐ **Electrostatic Precipitator**
Manufacturer: _____ Year installed: _____
What do you call this control equipment: _____
Pollutant(s) controlled: ☐ PE ☐ OC ☐ SO_2 ☐ NOx ☐ CO ☐ Other _____
Estimated capture efficiency (%): _____ Basis for efficiency: _____
Design control efficiency (%): _____ Basis for efficiency: _____

Section II - Specific Air Contaminant Source Information

Type: ☐ Plate-wire ☐ Flat-plate ☐ Tubular ☐ Wet ☐ Other _____
Number of operating fields: _____

☐ This is the only control equipment on this air contaminant source
If no, this control equipment is: ☐ Primary ☐ Secondary ☐ Parallel
List any other air contaminant sources that are also vented to this control equipment:
_____

☐ **Concentrator**
Manufacturer: _____ Year installed: _____
What do you call this control equipment: _____
Pollutant(s) controlled: ☐ PE ☐ OC ☐ SO_2 ☐ NOx ☐ CO ☐ Other _____
Estimated capture efficiency (%):_____ Basis for efficiency: _____
Design regeneration cycle time (minutes): _____
Minimum desorption air stream temperature (°F): _____
Rotational rate (revolutions/hour): _____
☐ This is the only control equipment on this air contaminant source
If no, this control equipment is: ☐ Primary ☐ Secondary ☐ Parallel
List any other air contaminant sources that are also vented to this control equipment:
_____

☐ **Catalytic Incinerator**
Manufacturer: _____ Year installed: _____
What do you call this control equipment: _____
Pollutant(s) controlled: ☐ PE ☐ OC ☐ SO_2 ☐ NOx ☐ CO ☐ Other _____
Estimated capture efficiency (%):_____ Basis for efficiency: _____
Design control efficiency (%):_____ Basis for efficiency: _____
Minimum inlet gas temperature (°F): _____
Combustion chamber residence time (seconds): _____
Minimum temperature difference (°F) across catalyst during air contaminant source operation: _____
☐ This is the only control equipment on this air contaminant source
If no, this control equipment is: ☐ Primary ☐ Secondary ☐ Parallel
List any other air contaminant sources that are also vented to this control equipment:
_____

☐ **Thermal Incinerator/Thermal Oxidizer**
Manufacturer: _____ Year installed: _____
What do you call this control equipment: _____
Pollutant(s) controlled: ☐ PE ☐ OC ☐ SO_2 ☐ NOx ☐ CO ☐ Other _____
Estimated capture efficiency (%):_____ Basis for efficiency: _____
Design control efficiency (%):_____ Basis for efficiency: _____
Minimum operating temperature (°F) and location: _____ (See line by line instructions.)
Combustion chamber residence time (seconds): _____
☐ This is the only control equipment on this air contaminant source
If no, this control equipment is: ☐ Primary ☐ Secondary ☐ Parallel
List any other air contaminant sources that are also vented to this control equipment:
_____

☐ **Flare**
Manufacturer: _____ Year installed: _____
What do you call this control equipment: _____
Pollutant(s) controlled: ☐ PE ☐ OC ☐ SO_2 ☐ NOx ☐ CO ☐ Other _____
Estimated capture efficiency (%):_____ Basis for efficiency: _____
Design control efficiency (%):_____ Basis for efficiency: _____
Type: ☐ Enclosed ☐ Elevated (open)
Ignition device: ☐ Electric arc ☐ Pilot flame
Flame presence sensor: ☐ Yes ☐ No
☐ This is the only control equipment on this air contaminant source
If no, this control equipment is: ☐ Primary ☐ Secondary ☐ Parallel
List any other air contaminant sources that are also vented to this control equipment:

Section II - Specific Air Contaminant Source Information

☐ **Condenser**

Manufacturer: _____ Year installed: _____
What do you call this control equipment: _____
Pollutant(s) controlled: ☐ PE ☐ OC ☐ SO_2 ☐ NOx ☐ CO ☐ Other _____
Estimated capture efficiency (%):_____ Basis for efficiency: _____
Design control efficiency (%):_____ Basis for efficiency: _____

Type: ☐ Indirect contact ☐ Direct contact
Maximum exhaust gas temperature (°F) during air contaminant source operation: _____
Coolant type: _____
Design coolant temperature (°F): Minimum _____ Maximum _____
Design coolant flow rate (gpm): _____
☐ This is the only control equipment on this air contaminant source
If no, this control equipment is: ☐ Primary ☐ Secondary ☐ Parallel
List any other air contaminant sources that are also vented to this control equipment:
_____

☐ **Carbon Absorber**

Manufacturer: _____ Year installed: _____
What do you call this control equipment: _____
Pollutant(s) controlled: ☐ PE ☐ OC ☐ SO_2 ☐ NOx ☐ CO ☐ Other _____
Estimated capture efficiency (%):_____ Basis for efficiency: _____
Design control efficiency (%):_____ Basis for efficiency: _____
Type: ☐ On-site regenerative ☐ Disposable
Maximum design outlet organic compound concentration (ppmv): _____
Carbon replacement frequency or regeneration cycle time (specify units): _____
Maximum temperature of the carbon bed, after regeneration (including any cooling cycle): _____
☐ This is the only control equipment on this air contaminant source
If no, this control equipment is: ☐ Primary ☐ Secondary ☐ Parallel
List any other air contaminant sources that are also vented to this control equipment:
_____

☐ **Dry Scrubber**

Manufacturer: _____ Year installed: _____
What do you call this control equipment: _____
Pollutant(s) controlled: ☐ PE ☐ OC ☐ SO_2 ☐ NOx ☐ CO ☐ Other _____
Estimated capture efficiency (%):_____ Basis for efficiency: _____
Design control efficiency (%):_____ Basis for efficiency: _____
Reagent(s) used: Type: _____ Injection rate(s): _____
Operating pressure drop range (inches of water): Minimum: _____ Maximum: _____
☐ This is the only control equipment on this air contaminant source
If no, this control equipment is: ☐ Primary ☐ Secondary ☐ Parallel
List any other air contaminant sources that are also vented to this control equipment:
_____

☐ **Paint booth filter**

Type: ☐ Paper ☐ Fiberglass ☐ Water curtain ☐ Other _____
Design control efficiency (%):_____ Basis for efficiency: _____

☐ **Other**, describe _____

Manufacturer: _____ Year installed: _____
What do you call this control equipment: _____
Pollutant(s) controlled: ☐ PE ☐ OC ☐ SO_2 ☐ NOx ☐ CO ☐ Other
Estimated capture efficiency (%): _____ Basis for efficiency: _____

Design control efficiency (%):_____ Basis for efficiency: _____
☐ This is the only control equipment on this air contaminant source
If no, this control equipment is: ☐ Primary ☐ Secondary ☐ Parallel

Section II - Specific Air Contaminant Source Information

List any other air contaminant sources that are also vented to this control equipment:

6. Attach a Process or Activity Flow Diagram to this application for each air contaminant source included in the application. The diagram should indicate their relationships to one another. See the line by line PTI instructions for additional information.

7. Emissions egress point(s) information: PTIs which allow total emissions in excess of the thresholds listed below will be subject to an air quality modeling analysis. This analysis is to assure that the impact from the requested project will not exceed Ohio=s Acceptable Incremental Impacts for criteria pollutants and/or Maximum Allowable Ground Level Concentrations (MAGLC) for air toxics. Permit requests that would have unacceptable impacts can not be approved as proposed. See the line by line PTI instructions for additional information.

   Complete the tables below if the requested allowable annual emission rate for this PTI exceeds any of the following:

   - Particulate Matter (PM10): 10 tons per year
   - Sulfur Dioxide (SO2): 25 tons per year
   - Nitrogen Oxides (NOx): 25 tons per year
   - Carbon Monoxide (CO): 100 tons per year
   - Air Toxic: 1 ton per year. An air toxic is any air pollutant for which the American Council of Governmental Industrial Hygienists (ACGIH) has established a Threshold Limit Value (TLV).

   Complete Table 7-A below for each stack emissions egress point. An egress point is a point at which emissions from an air contaminant source are released into the ambient (outside) air. List each individual egress point on a separate line.

Table 7-A, Stack Egress Point Information

Company Name or ID for the Egress Point (examples: Stack A; Boiler Stack; etc.)	Type Code *	Stack Egress Point Shape and Dimensions (in)(examples: round 10 inch ID; rectangular 14 X 16 inches; etc.)	Stack Egress Point Height from the Ground (ft)	Stack Temp. at Max. Capacity (F)	Stack Flow Rate at Max. Capacity (ACFM)	Minimum Distance to the Property Line (ft)
FILLING VESSEL VENT 2	A	Rectangular: 2 FT X 4 FT	250	200	2,150	1,000

*Type codes for stack egress points:

A. vertical stack (unobstructed): There are no obstructions to upward flow in or on the stack such as a rain cap.
B. vertical stack (obstructed): There are obstructions to the upward flow, such as a rain cap, which prevents or inhibits the air flow in a vertical direction.
C. non-vertical stack: The stack directs the air flow in a direction which is not directly upward.

Complete Table 7-B below for each fugitive emissions egress point. List each individual egress point on a separate line. Refer to the description of the fugitive egress point type codes below the table for use in completing the type code column of the table. For air contaminant sources like roadways and storage piles, only the first 5 columns need to be completed. For an air contaminant source with multiple fugitive emissions egress points, include only the primary egress points.

Table 7-B, Fugitive Egress Point Information

Company ID for the Egress Point (examples; Garage Door B, Building C; Roof Monitor; etc.)	Type Code*	Egress Point Description (examples: garage door, 12 X 30 feet, west wall; outside gravel storage piles; etc.)	Fugitive Egress Point Height from the Ground (ft)	Minimum Distance to the Property Line (ft)	Exit Gas Temp. (F)

*Type codes for fugitive egress point:

Section II - Specific Air Contaminant Source Information

D. door or window
E. other opening in the building without a duct
F. no stack and no building enclosing the air contaminant source (e.g., roadways)

Complete Table 7-C below for each Stack Egress Point identified in Table 7-A above. In each case, use the dimensions of the largest nearby building, building segment or structure. List each individual egress point on a separate line. Use the same Company Name or ID for the Egress Point in Table 7-C that was used in Table 7-A. See the line by line PTI instructions for additional information.

Table 7-C, Egress Point Additional Information (Add rows as necessary)

Company ID or Name for the Egress Point	Building Height (ft)	Building Width (ft)	Building Length (ft)
FILLING VESSEL VENT 2	200	70	250

8. Request for Federally Enforceable Limits

As part of this permit application, do you wish to propose voluntary restrictions to limit emissions in order to avoid specific requirements listed below, (i.e., are you requesting federally enforceable limits to obtain synthetic minor status)?

☐ yes
☒ no
☐ not sure - please contact me if this affects me

If yes, why are you requesting federally enforceable limits? Check all that apply.

a. ☐ to avoid being a major source (see OAC rule 3745-77-01)
b. ☐ to avoid being a major MACT source (see OAC rule 3745-31-01)
c. ☐ to avoid being a major modification (see OAC rule 3745-31-01)
d. ☐ to avoid being a major stationary source (see OAC rule 3745-31-01)
e. ☐ to avoid an air dispersion modeling requirement (see Engineering Guide # 69)
f. ☐ to avoid another requirement. Describe: _____

If you checked a., b. or d., please attach a facility-wide potential to emit (PTE) analysis (for each pollutant) and synthetic minor strategy to this application. (See line by line instructions for definition of PTE.) If you checked c., please attach a net emission change analysis to this application.

9. If this air contaminant source utilizes any continuous emissions monitoring equipment for indicating or demonstrating compliance, complete the following table. This does not include continuous parametric monitoring systems.

Company ID for Egress Point	Type of Monitor	Applicable performance specification (40 CFR 60, Appendix B)	Pollutant(s) Monitored

10. Do you wish to permit this air contaminant source as a portable source, allowing relocation within the state in accordance with OAC rule 3745-31-03 or OAC rule 3745-31-05?

☐ yes - Note: notification requirements in rules cited above must be followed.
☒ no

Section II - Specific Air Contaminant Source Information

11. The appropriate Emissions Activity Category (EAC) form(s) must be completed and attached for each air contaminant source. At least one complete EAC form must be submitted for each air contaminant source for the application to be considered complete. Refer to the list attached to the PTI instructions.

Section II - Specific Air Contaminant Source Information

NOTE: One copy of this section should be filled out for each air contaminant source covered by this PTI application. See the line by line PTI instructions for additional information.

1. Company identification (name for air contaminant source for which you are applying): FILLING VESSEL VENT 3

2. List all equipment that are part of this air contaminant source: FILLING VESSEL VENT 3

3. Air Contaminant Source Installation or Modification Schedule (must be completed regardless of date of installation or modification):

   When did/will you begin to install or modify the air contaminant source? (month/year) SECOND QUARTER 2008

   When did/will you begin to operate the air contaminant source? (month/year) THIRD QUARTER 2011 **OR** after issuance of PTI _____

4. Emissions Information: The following table requests information needed to determine the applicable requirements and the compliance status of this air contaminant source with those requirements. Suggestions for how to estimate emissions may be found in the instructions to the Emissions Activity Category (EAC) forms required with this application. If you need further assistance, contact your Ohio EPA permit representative.

   - If total potential emissions of HAPs or any Air Toxic is greater than 1 ton/yr, fill in the table for that (those) pollutant(s). For all other pollutants, if "Emissions before controls (max), lb/hr" multiplied by 24 hours/day is greater than 10 lb/day, fill in the table for that pollutant.
   - If you have no add-on control equipment, "Emissions before controls= will be the same as "Actual emissions"
   - Annual emissions should be based on operating 8760 hr/yr unless you are requesting operating restrictions to limit emissions in line # 8 or have described inherent limitations below.
   - If you use units other than lb/hr or ton/yr, specify the units used (e.g., gr/dscf, lb/ton charged, lb/MMBtu, ton/12-months).
   - Requested Allowable (ton/yr) is often equivalent to Potential to Emit (PTE) as defined in OAC rule 3745-31-01 and OAC rule 3745-77-01.

Pollutant	Emissions before controls (max) (lb/hr)	Actual emissions (lb/hr)	Actual emissions (ton/year)	Requested Allowable (lb/hr)	Requested Allowable (ton/year)
Particulate emissions (PE) (formerly particulate matter, PM)	41.66	0.07	0.32	0.07	0.32
PM_{10} (PM < 10 microns in diameter)	41.66	0.07	0.32	0.07	0.32
Sulfur dioxide (SO_2)	0	0	0	0	0
Nitrogen oxides (NO_x)	0	0	0	0	0
Carbon monoxide (CO)	0	0	0	0	0
Organic compounds (OC)	0	0	0	0	0
Volatile organic compounds (VOC)	0	0	0	0	0
Total HAPs	0	0	0	0	0
Highest single HAP:	0	0	0	0	0
Air Toxics (see instructions):	0	0	0	0	0

Provide your calculations as an attachment and explain how all process variables and emission factors were selected. Note the emissions factor(s) employed and document the origin. Example: AP-42, Table 4.4-3 (8/97); stack test, Method 5, 4/96; mass balance based on MSDS; etc.

Section II - Specific Air Contaminant Source Information

5. **Does this air contaminant source employ emissions control equipment?**

☒ **Yes** - fill out the applicable information below.

☐ **No** - proceed to item # 6.

Note: Pollutant abbreviations used below: Particulates = PE; Organic compounds = OC; Sulfur dioxide = SO_2; Nitrogen oxides = NOx; Carbon monoxide = CO

☐ **Cyclone/Multiclone**

Manufacturer: _____ Year installed: _____
What do you call this control equipment: _____
Pollutant(s) controlled: ☐ PE ☐ OC ☐ SO_2 ☐ NOx ☐ CO ☐ Other _____
Estimated capture efficiency (%): _____ Basis for efficiency: _____
Design control efficiency (%): _____ Basis for efficiency: _____
Type: ☐ Cyclone ☐ Multiclone ☐ Rotoclone ☐ Other _____
☐ This is the only control equipment on this air contaminant source
If no, this control equipment is: ☐ Primary ☐ Secondary ☐ Parallel
List any other air contaminant sources that are also vented to this control equipment:
_____

☒ **Fabric Filter/Baghouse**

Manufacturer: TO BE DETERMINED Year installed: NEW FACILITY
What do you call this control equipment: FILLING VESSEL FILTER 3
Pollutant(s) controlled: ☒ PE ☐ OC ☐ SO_2 ☐ NOx ☐ CO ☐ Other _____
Estimated capture efficiency (%):100 Basis for efficiency: ENGINEERING DESIGN
Design control efficiency (%):99.9 Basis for efficiency: LITERATURE
Operating pressure drop range (inches of water): Minimum: 3 Maximum: 6
Pressure type: ☐ Negative pressure ☒ Positive pressure
Fabric cleaning mechanism: ☐ Reverse air ☒ Pulse jet ☐ Shaker ☐ Other _____
☐ Lime injection or fabric coating agent used: Type: _____ Feed rate: _____
☒ This is the only control equipment on this air contaminant source
If no, this control equipment is: ☐ Primary ☐ Secondary ☐ Parallel
List any other air contaminant sources that are also vented to this control equipment:
_____

☐ **Wet Scrubber**

Manufacturer: _____ Year installed: _____
What do you call this control equipment: _____
Pollutant(s) controlled: ☐ PE ☐ OC ☐ SO_2 ☐ NOx ☐ CO ☐ Other _____
Estimated capture efficiency (%): _____ Basis for efficiency: _____
Design control efficiency (%): _____ Basis for efficiency: _____
Type: ☐ Spray chamber ☐ Packed bed ☐ Impingement ☐ Venturi ☐ Other _____
Operating pressure drop range (inches of water): Minimum: _____ Maximum: _____
pH range for scrubbing liquid: Minimum: _____ Maximum: _____
Scrubbing liquid flow rate (gal/min): _____
Is scrubber liquid recirculated? ☐ Yes ☐ No
Water supply pressure (psig): _____ NOTE: This item for spray chambers only.
☐ This is the only control equipment on this air contaminant source
If no, this control equipment is: ☐ Primary ☐ Secondary ☐ Parallel
List any other air contaminant sources that are also vented to this control equipment:
_____

☐ **Electrostatic Precipitator**

Manufacturer: _____ Year installed: _____
What do you call this control equipment: _____
Pollutant(s) controlled: ☐ PE ☐ OC ☐ SO_2 ☐ NOx ☐ CO ☐ Other _____
Estimated capture efficiency (%): _____ Basis for efficiency: _____
Design control efficiency (%): _____ Basis for efficiency: _____

Section II - Specific Air Contaminant Source Information

Type: ☐ Plate-wire ☐ Flat-plate ☐ Tubular ☐ Wet ☐ Other _____
Number of operating fields: _____

☐ This is the only control equipment on this air contaminant source
If no, this control equipment is: ☐ Primary ☐ Secondary ☐ Parallel
List any other air contaminant sources that are also vented to this control equipment:
_____

☐ **Concentrator**
Manufacturer: _____ Year installed: _____
What do you call this control equipment: _____
Pollutant(s) controlled: ☐ PE ☐ OC ☐ SO_2 ☐ NOx ☐ CO ☐ Other _____
Estimated capture efficiency (%):_____ Basis for efficiency: _____
Design regeneration cycle time (minutes): _____
Minimum desorption air stream temperature (°F): _____
Rotational rate (revolutions/hour): _____
☐ This is the only control equipment on this air contaminant source
If no, this control equipment is: ☐ Primary ☐ Secondary ☐ Parallel
List any other air contaminant sources that are also vented to this control equipment:
_____

☐ **Catalytic Incinerator**
Manufacturer: _____ Year installed: _____
What do you call this control equipment: _____
Pollutant(s) controlled: ☐ PE ☐ OC ☐ SO_2 ☐ NOx ☐ CO ☐ Other _____
Estimated capture efficiency (%):_____ Basis for efficiency: _____
Design control efficiency (%):_____ Basis for efficiency: _____
Minimum inlet gas temperature (°F): _____
Combustion chamber residence time (seconds): _____
Minimum temperature difference (°F) across catalyst during air contaminant source operation: _____
☐ This is the only control equipment on this air contaminant source
If no, this control equipment is: ☐ Primary ☐ Secondary ☐ Parallel
List any other air contaminant sources that are also vented to this control equipment:
_____

☐ **Thermal Incinerator/Thermal Oxidizer**
Manufacturer: _____ Year installed: _____
What do you call this control equipment: _____
Pollutant(s) controlled: ☐ PE ☐ OC ☐ SO_2 ☐ NOx ☐ CO ☐ Other _____
Estimated capture efficiency (%):_____ Basis for efficiency: _____
Design control efficiency (%):_____ Basis for efficiency: _____
Minimum operating temperature (°F) and location: _____ (See line by line instructions.)
Combustion chamber residence time (seconds): _____
☐ This is the only control equipment on this air contaminant source
If no, this control equipment is: ☐ Primary ☐ Secondary ☐ Parallel
List any other air contaminant sources that are also vented to this control equipment:
_____

☐ **Flare**
Manufacturer: _____ Year installed: _____
What do you call this control equipment: _____
Pollutant(s) controlled: ☐ PE ☐ OC ☐ SO_2 ☐ NOx ☐ CO ☐ Other _____
Estimated capture efficiency (%):_____ Basis for efficiency: _____
Design control efficiency (%):_____ Basis for efficiency: _____
Type: ☐ Enclosed ☐ Elevated (open)
Ignition device: ☐ Electric arc ☐ Pilot flame
Flame presence sensor: ☐ Yes ☐ No
☐ This is the only control equipment on this air contaminant source
If no, this control equipment is: ☐ Primary ☐ Secondary ☐ Parallel
List any other air contaminant sources that are also vented to this control equipment:

Section II - Specific Air Contaminant Source Information

☐ **Condenser**
Manufacturer: _____ Year installed: _____
What do you call this control equipment: _____
Pollutant(s) controlled: ☐ PE ☐ OC ☐ SO_2 ☐ NOx ☐ CO ☐ Other _____
Estimated capture efficiency (%): _____ Basis for efficiency: _____
Design control efficiency (%): _____ Basis for efficiency: _____

Type: ☐ Indirect contact ☐ Direct contact
Maximum exhaust gas temperature (°F) during air contaminant source operation: _____
Coolant type: _____
Design coolant temperature (°F): Minimum _____ Maximum _____
Design coolant flow rate (gpm): _____
☐ This is the only control equipment on this air contaminant source
If no, this control equipment is: ☐ Primary ☐ Secondary ☐ Parallel
List any other air contaminant sources that are also vented to this control equipment:
_____

☐ **Carbon Absorber**
Manufacturer: _____ Year installed: _____
What do you call this control equipment: _____
Pollutant(s) controlled: ☐ PE ☐ OC ☐ SO_2 ☐ NOx ☐ CO ☐ Other _____
Estimated capture efficiency (%): _____ Basis for efficiency: _____
Design control efficiency (%): _____ Basis for efficiency: _____
Type: ☐ On-site regenerative ☐ Disposable
Maximum design outlet organic compound concentration (ppmv): _____
Carbon replacement frequency or regeneration cycle time (specify units): _____
Maximum temperature of the carbon bed, after regeneration (including any cooling cycle): _____
☐ This is the only control equipment on this air contaminant source
If no, this control equipment is: ☐ Primary ☐ Secondary ☐ Parallel
List any other air contaminant sources that are also vented to this control equipment:
_____

☐ **Dry Scrubber**
Manufacturer: _____ Year installed: _____
What do you call this control equipment: _____
Pollutant(s) controlled: ☐ PE ☐ OC ☐ SO_2 ☐ NOx ☐ CO ☐ Other _____
Estimated capture efficiency (%): _____ Basis for efficiency: _____
Design control efficiency (%): _____ Basis for efficiency: _____
Reagent(s) used: Type: _____ Injection rate(s): _____
Operating pressure drop range (inches of water): Minimum: _____ Maximum: _____
☐ This is the only control equipment on this air contaminant source
If no, this control equipment is: ☐ Primary ☐ Secondary ☐ Parallel
List any other air contaminant sources that are also vented to this control equipment:
_____

☐ **Paint booth filter**
Type: ☐ Paper ☐ Fiberglass ☐ Water curtain ☐ Other _____
Design control efficiency (%): _____ Basis for efficiency: _____

☐ **Other**, describe _____
Manufacturer: _____ Year installed: _____
What do you call this control equipment: _____
Pollutant(s) controlled: ☐ PE ☐ OC ☐ SO_2 ☐ NOx ☐ CO ☐ Other
Estimated capture efficiency (%): _____ Basis for efficiency: _____

Design control efficiency (%): _____ Basis for efficiency: _____
☐ This is the only control equipment on this air contaminant source
If no, this control equipment is: ☐ Primary ☐ Secondary ☐ Parallel

Section II - Specific Air Contaminant Source Information

List any other air contaminant sources that are also vented to this control equipment:

_____

6. Attach a Process or Activity Flow Diagram to this application for each air contaminant source included in the application. The diagram should indicate their relationships to one another. See the line by line PTI instructions for additional information.

7. Emissions egress point(s) information: PTIs which allow total emissions in excess of the thresholds listed below will be subject to an air quality modeling analysis. This analysis is to assure that the impact from the requested project will not exceed Ohio=s Acceptable Incremental Impacts for criteria pollutants and/or Maximum Allowable Ground Level Concentrations (MAGLC) for air toxics. Permit requests that would have unacceptable impacts can not be approved as proposed. See the line by line PTI instructions for additional information.

   Complete the tables below if the requested allowable annual emission rate for this PTI exceeds any of the following:

   - Particulate Matter (PM10): 10 tons per year
   - Sulfur Dioxide (SO2): 25 tons per year
   - Nitrogen Oxides (NOx): 25 tons per year
   - Carbon Monoxide (CO): 100 tons per year
   - Air Toxic: 1 ton per year. An air toxic is any air pollutant for which the American Council of Governmental Industrial Hygienists (ACGIH) has established a Threshold Limit Value (TLV).

   Complete Table 7-A below for each stack emissions egress point. An egress point is a point at which emissions from an air contaminant source are released into the ambient (outside) air. List each individual egress point on a separate line.

Table 7-A, Stack Egress Point Information

Company Name or ID for the Egress Point (examples: Stack A; Boiler Stack; etc.)	Type Code *	Stack Egress Point Shape and Dimensions (in)(examples: round 10 inch ID; rectangular 14 X 16 inches; etc.)	Stack Egress Point Height from the Ground (ft)	Stack Temp. at Max. Capacity (F)	Stack Flow Rate at Max. Capacity (ACFM)	Minimum Distance to the Property Line (ft)
FILLING VESSEL VENT 3	A	Rectangular: 2 FT X 4 FT	250	200	2,150	1,000

*Type codes for stack egress points:

A. vertical stack (unobstructed): There are no obstructions to upward flow in or on the stack such as a rain cap.
B. vertical stack (obstructed): There are obstructions to the upward flow, such as a rain cap, which prevents or inhibits the air flow in a vertical direction.
C. non-vertical stack: The stack directs the air flow in a direction which is not directly upward.

Complete Table 7-B below for each fugitive emissions egress point. List each individual egress point on a separate line. Refer to the description of the fugitive egress point type codes below the table for use in completing the type code column of the table. For air contaminant sources like roadways and storage piles, only the first 5 columns need to be completed. For an air contaminant source with multiple fugitive emissions egress points, include only the primary egress points.

Table 7-B, Fugitive Egress Point Information

Company ID for the Egress Point (examples; Garage Door B, Building C; Roof Monitor; etc.)	Type Code*	Egress Point Description (examples: garage door, 12 X 30 feet, west wall; outside gravel storage piles; etc.)	Fugitive Egress Point Height from the Ground (ft)	Minimum Distance to the Property Line (ft)	Exit Gas Temp. (F)

*Type codes for fugitive egress point:

Section II - Specific Air Contaminant Source Information

D. door or window
E. other opening in the building without a duct
F. no stack and no building enclosing the air contaminant source (e.g., roadways)

Complete Table 7-C below for each Stack Egress Point identified in Table 7-A above. In each case, use the dimensions of the largest nearby building, building segment or structure. List each individual egress point on a separate line. Use the same Company Name or ID for the Egress Point in Table 7-C that was used in Table 7-A. See the line by line PTI instructions for additional information.

Table 7-C, Egress Point Additional Information (Add rows as necessary)

Company ID or Name for the Egress Point	Building Height (ft)	Building Width (ft)	Building Length (ft)
FILLING VESSEL VENT 3	200	70	250

8. Request for Federally Enforceable Limits

As part of this permit application, do you wish to propose voluntary restrictions to limit emissions in order to avoid specific requirements listed below, (i.e., are you requesting federally enforceable limits to obtain synthetic minor status)?

☐ yes
☒ no
☐ not sure - please contact me if this affects me

If yes, why are you requesting federally enforceable limits? Check all that apply.

a. ☐ to avoid being a major source (see OAC rule 3745-77-01)
b. ☐ to avoid being a major MACT source (see OAC rule 3745-31-01)
c. ☐ to avoid being a major modification (see OAC rule 3745-31-01)
d. ☐ to avoid being a major stationary source (see OAC rule 3745-31-01)
e. ☐ to avoid an air dispersion modeling requirement (see Engineering Guide # 69)
f. ☐ to avoid another requirement. Describe: _____

If you checked a., b. or d., please attach a facility-wide potential to emit (PTE) analysis (for each pollutant) and synthetic minor strategy to this application. (See line by line instructions for definition of PTE.) If you checked c., please attach a net emission change analysis to this application.

9. If this air contaminant source utilizes any continuous emissions monitoring equipment for indicating or demonstrating compliance, complete the following table. This does not include continuous parametric monitoring systems.

Company ID for Egress Point	Type of Monitor	Applicable performance specification (40 CFR 60, Appendix B)	Pollutant(s) Monitored

10. Do you wish to permit this air contaminant source as a portable source, allowing relocation within the state in accordance with OAC rule 3745-31-03 or OAC rule 3745-31-05?

☐ yes - Note: notification requirements in rules cited above must be followed.
☒ no

Section II - Specific Air Contaminant Source Information

11. The appropriate Emissions Activity Category (EAC) form(s) must be completed and attached for each air contaminant source. At least one complete EAC form must be submitted for each air contaminant source for the application to be considered complete. Refer to the list attached to the PTI instructions.

Section II - Specific Air Contaminant Source Information

NOTE: One copy of this section should be filled out for each air contaminant source covered by this PTI application. See the line by line PTI instructions for additional information.

1. Company identification (name for air contaminant source for which you are applying): FILLING VESSEL VENT 4

2. List all equipment that are part of this air contaminant source: FILLING VESSEL VENT 4

3. Air Contaminant Source Installation or Modification Schedule (must be completed regardless of date of installation or modification):

   When did/will you begin to install or modify the air contaminant source? (month/year) SECOND QUARTER 2008

   When did/will you begin to operate the air contaminant source? (month/year) THIRD QUARTER 2011 **OR** after issuance of PTI _____

4. Emissions Information: The following table requests information needed to determine the applicable requirements and the compliance status of this air contaminant source with those requirements. Suggestions for how to estimate emissions may be found in the instructions to the Emissions Activity Category (EAC) forms required with this application. If you need further assistance, contact your Ohio EPA permit representative.

   - If total potential emissions of HAPs or any Air Toxic is greater than 1 ton/yr, fill in the table for that (those) pollutant(s). For all other pollutants, if "Emissions before controls (max), lb/hr" multiplied by 24 hours/day is greater than 10 lb/day, fill in the table for that pollutant.
   - If you have no add-on control equipment, "Emissions before controls= will be the same as "Actual emissions"
   - Annual emissions should be based on operating 8760 hr/yr unless you are requesting operating restrictions to limit emissions in line # 8 or have described inherent limitations below.
   - If you use units other than lb/hr or ton/yr, specify the units used (e.g., gr/dscf, lb/ton charged, lb/MMBtu, ton/12-months).
   - Requested Allowable (ton/yr) is often equivalent to Potential to Emit (PTE) as defined in OAC rule 3745-31-01 and OAC rule 3745-77-01.

Pollutant	Emissions before controls (max) (lb/hr)	Actual emissions (lb/hr)	Actual emissions (ton/year)	Requested Allowable (lb/hr)	Requested Allowable (ton/year)
Particulate emissions (PE) (formerly particulate matter, PM)	41.66	0.07	0.32	0.07	0.32
PM_{10} (PM < 10 microns in diameter)	41.66	0.07	0.32	0.07	0.32
Sulfur dioxide (SO_2)	0	0	0	0	0
Nitrogen oxides (NO_x)	0	0	0	0	0
Carbon monoxide (CO)	0	0	0	0	0
Organic compounds (OC)	0	0	0	0	0
Volatile organic compounds (VOC)	0	0	0	0	0
Total HAPs	0	0	0	0	0
Highest single HAP:	0	0	0	0	0
Air Toxics (see instructions):	0	0	0	0	0

Provide your calculations as an attachment and explain how all process variables and emission factors were selected. Note the emissions factor(s) employed and document the origin. Example: AP-42, Table 4.4-3 (8/97); stack test, Method 5, 4/96; mass balance based on MSDS; etc.

Section II - Specific Air Contaminant Source Information

5. **Does this air contaminant source employ emissions control equipment?**

☒ **Yes** - fill out the applicable information below.

☐ **No** - proceed to item # 6.

Note: Pollutant abbreviations used below: Particulates = PE; Organic compounds = OC; Sulfur dioxide = SO_2; Nitrogen oxides = NOx; Carbon monoxide = CO

☐ **Cyclone/Multiclone**
Manufacturer: _____ Year installed: _____
What do you call this control equipment: _____
Pollutant(s) controlled: ☐ PE ☐ OC ☐ SO_2 ☐ NOx ☐ CO ☐ Other _____
Estimated capture efficiency (%): _____ Basis for efficiency: _____
Design control efficiency (%): _____ Basis for efficiency: _____
Type: ☐ Cyclone ☐ Multiclone ☐ Rotoclone ☐ Other _____
☐ This is the only control equipment on this air contaminant source
If no, this control equipment is: ☐ Primary ☐ Secondary ☐ Parallel
List any other air contaminant sources that are also vented to this control equipment:
_____

☒ **Fabric Filter/Baghouse**
Manufacturer: TO BE DETERMINED Year installed: NEW FACILITY
What do you call this control equipment: FILLING VESSEL FILTER 4
Pollutant(s) controlled: ☒ PE ☐ OC ☐ SO_2 ☐ NOx ☐ CO ☐ Other _____
Estimated capture efficiency (%):100 Basis for efficiency: ENGINEERING DESIGN
Design control efficiency (%):99.9 Basis for efficiency: LITERATURE
Operating pressure drop range (inches of water): Minimum: 3 Maximum: 6
Pressure type: ☐ Negative pressure ☒ Positive pressure
Fabric cleaning mechanism: ☐ Reverse air ☒ Pulse jet ☐ Shaker ☐ Other _____
☐ Lime injection or fabric coating agent used: Type: _____ Feed rate: _____
☒ This is the only control equipment on this air contaminant source
If no, this control equipment is: ☐ Primary ☐ Secondary ☐ Parallel
List any other air contaminant sources that are also vented to this control equipment:
_____

☐ **Wet Scrubber**
Manufacturer: _____ Year installed: _____
What do you call this control equipment: _____
Pollutant(s) controlled: ☐ PE ☐ OC ☐ SO_2 ☐ NOx ☐ CO ☐ Other _____
Estimated capture efficiency (%): _____ Basis for efficiency: _____
Design control efficiency (%): _____ Basis for efficiency: _____
Type: ☐ Spray chamber ☐ Packed bed ☐ Impingement ☐ Venturi ☐ Other _____
Operating pressure drop range (inches of water): Minimum: _____ Maximum: _____
pH range for scrubbing liquid: Minimum: _____ Maximum: _____
Scrubbing liquid flow rate (gal/min): _____
Is scrubber liquid recirculated? ☐ Yes ☐ No
Water supply pressure (psig): _____ NOTE: This item for spray chambers only.
☐ This is the only control equipment on this air contaminant source
If no, this control equipment is: ☐ Primary ☐ Secondary ☐ Parallel
List any other air contaminant sources that are also vented to this control equipment:
_____

☐ **Electrostatic Precipitator**
Manufacturer: _____ Year installed: _____
What do you call this control equipment: _____
Pollutant(s) controlled: ☐ PE ☐ OC ☐ SO_2 ☐ NOx ☐ CO ☐ Other _____
Estimated capture efficiency (%): _____ Basis for efficiency: _____
Design control efficiency (%): _____ Basis for efficiency: _____

Section II - Specific Air Contaminant Source Information

Type: ☐ Plate-wire ☐ Flat-plate ☐ Tubular ☐ Wet ☐ Other _____
Number of operating fields: _____

☐ This is the only control equipment on this air contaminant source
If no, this control equipment is: ☐ Primary ☐ Secondary ☐ Parallel
List any other air contaminant sources that are also vented to this control equipment:
_____

☐ **Concentrator**
Manufacturer: _____ Year installed: _____
What do you call this control equipment: _____
Pollutant(s) controlled: ☐ PE ☐ OC ☐ SO_2 ☐ NOx ☐ CO ☐ Other _____
Estimated capture efficiency (%):_____ Basis for efficiency: _____
Design regeneration cycle time (minutes): _____
Minimum desorption air stream temperature (°F): _____
Rotational rate (revolutions/hour): _____
☐ This is the only control equipment on this air contaminant source
If no, this control equipment is: ☐ Primary ☐ Secondary ☐ Parallel
List any other air contaminant sources that are also vented to this control equipment:
_____

☐ **Catalytic Incinerator**
Manufacturer: _____ Year installed: _____
What do you call this control equipment: _____
Pollutant(s) controlled: ☐ PE ☐ OC ☐ SO_2 ☐ NOx ☐ CO ☐ Other _____
Estimated capture efficiency (%):_____ Basis for efficiency: _____
Design control efficiency (%):_____ Basis for efficiency: _____
Minimum inlet gas temperature (°F): _____
Combustion chamber residence time (seconds): _____
Minimum temperature difference (°F) across catalyst during air contaminant source operation: _____
☐ This is the only control equipment on this air contaminant source
If no, this control equipment is: ☐ Primary ☐ Secondary ☐ Parallel
List any other air contaminant sources that are also vented to this control equipment:
_____

☐ **Thermal Incinerator/Thermal Oxidizer**
Manufacturer: _____ Year installed: _____
What do you call this control equipment: _____
Pollutant(s) controlled: ☐ PE ☐ OC ☐ SO_2 ☐ NOx ☐ CO ☐ Other _____
Estimated capture efficiency (%):_____ Basis for efficiency: _____
Design control efficiency (%):_____ Basis for efficiency: _____
Minimum operating temperature (°F) and location: _____ (See line by line instructions.)
Combustion chamber residence time (seconds): _____
☐ This is the only control equipment on this air contaminant source
If no, this control equipment is: ☐ Primary ☐ Secondary ☐ Parallel
List any other air contaminant sources that are also vented to this control equipment:
_____

☐ **Flare**
Manufacturer: _____ Year installed: _____
What do you call this control equipment: _____
Pollutant(s) controlled: ☐ PE ☐ OC ☐ SO_2 ☐ NOx ☐ CO ☐ Other _____
Estimated capture efficiency (%):_____ Basis for efficiency: _____
Design control efficiency (%):_____ Basis for efficiency: _____
Type: ☐ Enclosed ☐ Elevated (open)
Ignition device: ☐ Electric arc ☐ Pilot flame
Flame presence sensor: ☐ Yes ☐ No
☐ This is the only control equipment on this air contaminant source
If no, this control equipment is: ☐ Primary ☐ Secondary ☐ Parallel
List any other air contaminant sources that are also vented to this control equipment:

Section II - Specific Air Contaminant Source Information

☐ **Condenser**

Manufacturer: _____ Year installed: _____
What do you call this control equipment: _____
Pollutant(s) controlled: ☐ PE ☐ OC ☐ SO_2 ☐ NOx ☐ CO ☐ Other _____
Estimated capture efficiency (%): _____ Basis for efficiency: _____
Design control efficiency (%): _____ Basis for efficiency: _____

Type: ☐ Indirect contact ☐ Direct contact
Maximum exhaust gas temperature (°F) during air contaminant source operation: _____
Coolant type: _____
Design coolant temperature (°F): Minimum _____ Maximum _____
Design coolant flow rate (gpm): _____
☐ This is the only control equipment on this air contaminant source
If no, this control equipment is: ☐ Primary ☐ Secondary ☐ Parallel
List any other air contaminant sources that are also vented to this control equipment:
_____

☐ **Carbon Absorber**

Manufacturer: _____ Year installed: _____
What do you call this control equipment: _____
Pollutant(s) controlled: ☐ PE ☐ OC ☐ SO_2 ☐ NOx ☐ CO ☐ Other _____
Estimated capture efficiency (%): _____ Basis for efficiency: _____
Design control efficiency (%): _____ Basis for efficiency: _____
Type: ☐ On-site regenerative ☐ Disposable
Maximum design outlet organic compound concentration (ppmv): _____
Carbon replacement frequency or regeneration cycle time (specify units): _____
Maximum temperature of the carbon bed, after regeneration (including any cooling cycle): _____
☐ This is the only control equipment on this air contaminant source
If no, this control equipment is: ☐ Primary ☐ Secondary ☐ Parallel
List any other air contaminant sources that are also vented to this control equipment:
_____

☐ **Dry Scrubber**

Manufacturer: _____ Year installed: _____
What do you call this control equipment: _____
Pollutant(s) controlled: ☐ PE ☐ OC ☐ SO_2 ☐ NOx ☐ CO ☐ Other _____
Estimated capture efficiency (%): _____ Basis for efficiency: _____
Design control efficiency (%): _____ Basis for efficiency: _____
Reagent(s) used: Type: _____ Injection rate(s): _____
Operating pressure drop range (inches of water): Minimum: _____ Maximum: _____
☐ This is the only control equipment on this air contaminant source
If no, this control equipment is: ☐ Primary ☐ Secondary ☐ Parallel
List any other air contaminant sources that are also vented to this control equipment:
_____

☐ **Paint booth filter**

Type: ☐ Paper ☐ Fiberglass ☐ Water curtain ☐ Other _____
Design control efficiency (%): _____ Basis for efficiency: _____

☐ **Other**, describe _____

Manufacturer: _____ Year installed: _____
What do you call this control equipment: _____
Pollutant(s) controlled: ☐ PE ☐ OC ☐ SO_2 ☐ NOx ☐ CO ☐ Other
Estimated capture efficiency (%): _____ Basis for efficiency: _____

Design control efficiency (%): _____ Basis for efficiency: _____
☐ This is the only control equipment on this air contaminant source
If no, this control equipment is: ☐ Primary ☐ Secondary ☐ Parallel

Section II - Specific Air Contaminant Source Information

List any other air contaminant sources that are also vented to this control equipment:

6. Attach a Process or Activity Flow Diagram to this application for each air contaminant source included in the application. The diagram should indicate their relationships to one another. See the line by line PTI instructions for additional information.

7. Emissions egress point(s) information: PTIs which allow total emissions in excess of the thresholds listed below will be subject to an air quality modeling analysis. This analysis is to assure that the impact from the requested project will not exceed Ohio=s Acceptable Incremental Impacts for criteria pollutants and/or Maximum Allowable Ground Level Concentrations (MAGLC) for air toxics. Permit requests that would have unacceptable impacts can not be approved as proposed. See the line by line PTI instructions for additional information.

   Complete the tables below if the requested allowable annual emission rate for this PTI exceeds any of the following:

   - Particulate Matter (PM10): 10 tons per year
   - Sulfur Dioxide (SO2): 25 tons per year
   - Nitrogen Oxides (NOx): 25 tons per year
   - Carbon Monoxide (CO): 100 tons per year
   - Air Toxic: 1 ton per year. An air toxic is any air pollutant for which the American Council of Governmental Industrial Hygienists (ACGIH) has established a Threshold Limit Value (TLV).

   Complete Table 7-A below for each stack emissions egress point. An egress point is a point at which emissions from an air contaminant source are released into the ambient (outside) air. List each individual egress point on a separate line.

Table 7-A, Stack Egress Point Information

Company Name or ID for the Egress Point (examples: Stack A; Boiler Stack; etc.)	Type Code *	Stack Egress Point Shape and Dimensions (in)(examples: round 10 inch ID; rectangular 14 X 16 inches; etc.)	Stack Egress Point Height from the Ground (ft)	Stack Temp. at Max. Capacity (F)	Stack Flow Rate at Max. Capacity (ACFM)	Minimum Distance to the Property Line (ft)
FILLING VESSEL VENT 4	A	Rectangular: 2 FT X 4 FT	250	200	2,150	1,000

*Type codes for stack egress points:

A. vertical stack (unobstructed): There are no obstructions to upward flow in or on the stack such as a rain cap.
B. vertical stack (obstructed): There are obstructions to the upward flow, such as a rain cap, which prevents or inhibits the air flow in a vertical direction.
C. non-vertical stack: The stack directs the air flow in a direction which is not directly upward.

Complete Table 7-B below for each fugitive emissions egress point. List each individual egress point on a separate line. Refer to the description of the fugitive egress point type codes below the table for use in completing the type code column of the table. For air contaminant sources like roadways and storage piles, only the first 5 columns need to be completed. For an air contaminant source with multiple fugitive emissions egress points, include only the primary egress points.

Table 7-B, Fugitive Egress Point Information

Company ID for the Egress Point (examples; Garage Door B, Building C; Roof Monitor; etc.)	Type Code*	Egress Point Description (examples: garage door, 12 X 30 feet, west wall; outside gravel storage piles; etc.)	Fugitive Egress Point Height from the Ground (ft)	Minimum Distance to the Property Line (ft)	Exit Gas Temp. (F)

*Type codes for fugitive egress point:

Section II - Specific Air Contaminant Source Information

D. door or window
E. other opening in the building without a duct
F. no stack and no building enclosing the air contaminant source (e.g., roadways)

Complete Table 7-C below for each Stack Egress Point identified in Table 7-A above. In each case, use the dimensions of the largest nearby building, building segment or structure. List each individual egress point on a separate line. Use the same Company Name or ID for the Egress Point in Table 7-C that was used in Table 7-A. See the line by line PTI instructions for additional information.

Table 7-C, Egress Point Additional Information (Add rows as necessary)			
Company ID or Name for the Egress Point	**Building Height (ft)**	**Building Width (ft)**	**Building Length (ft)**
FILLING VESSEL VENT 4	200	70	250

8. Request for Federally Enforceable Limits

As part of this permit application, do you wish to propose voluntary restrictions to limit emissions in order to avoid specific requirements listed below, (i.e., are you requesting federally enforceable limits to obtain synthetic minor status)?

☐ yes
☒ no
☐ not sure - please contact me if this affects me

If yes, why are you requesting federally enforceable limits? Check all that apply.

a. ☐ to avoid being a major source (see OAC rule 3745-77-01)
b. ☐ to avoid being a major MACT source (see OAC rule 3745-31-01)
c. ☐ to avoid being a major modification (see OAC rule 3745-31-01)
d. ☐ to avoid being a major stationary source (see OAC rule 3745-31-01)
e. ☐ to avoid an air dispersion modeling requirement (see Engineering Guide # 69)
f. ☐ to avoid another requirement. Describe: _____

If you checked a., b. or d., please attach a facility-wide potential to emit (PTE) analysis (for each pollutant) and synthetic minor strategy to this application. (See line by line instructions for definition of PTE.) If you checked c., please attach a net emission change analysis to this application.

9. If this air contaminant source utilizes any continuous emissions monitoring equipment for indicating or demonstrating compliance, complete the following table. This does not include continuous parametric monitoring systems.

Company ID for Egress Point	**Type of Monitor**	**Applicable performance specification (40 CFR 60, Appendix B)**	**Pollutant(s) Monitored**

10. Do you wish to permit this air contaminant source as a portable source, allowing relocation within the state in accordance with OAC rule 3745-31-03 or OAC rule 3745-31-05?

☐ yes - Note: notification requirements in rules cited above must be followed.
☒ no

Section II - Specific Air Contaminant Source Information

11. The appropriate Emissions Activity Category (EAC) form(s) must be completed and attached for each air contaminant source. At least one complete EAC form must be submitted for each air contaminant source for the application to be considered complete. Refer to the list attached to the PTI instructions.

Section II - Specific Air Contaminant Source Information

NOTE: One copy of this section should be filled out for each air contaminant source covered by this PTI application. See the line by line PTI instructions for additional information.

1. Company identification (name for air contaminant source for which you are applying): FILLING VESSEL VENT 5

2. List all equipment that are part of this air contaminant source: FILLING VESSEL VENT 5

3. Air Contaminant Source Installation or Modification Schedule (must be completed regardless of date of installation or modification):

   When did/will you begin to install or modify the air contaminant source? (month/year) SECOND QUARTER 2008

   When did/will you begin to operate the air contaminant source? (month/year) THIRD QUARTER 2011 **OR** after issuance of PTI _____

4. Emissions Information: The following table requests information needed to determine the applicable requirements and the compliance status of this air contaminant source with those requirements. Suggestions for how to estimate emissions may be found in the instructions to the Emissions Activity Category (EAC) forms required with this application. If you need further assistance, contact your Ohio EPA permit representative.

   - If total potential emissions of HAPs or any Air Toxic is greater than 1 ton/yr, fill in the table for that (those) pollutant(s). For all other pollutants, if "Emissions before controls (max), lb/hr" multiplied by 24 hours/day is greater than 10 lb/day, fill in the table for that pollutant.
   - If you have no add-on control equipment, "Emissions before controls= will be the same as "Actual emissions"
   - Annual emissions should be based on operating 8760 hr/yr unless you are requesting operating restrictions to limit emissions in line # 8 or have described inherent limitations below.
   - If you use units other than lb/hr or ton/yr, specify the units used (e.g., gr/dscf, lb/ton charged, lb/MMBtu, ton/12-months).
   - Requested Allowable (ton/yr) is often equivalent to Potential to Emit (PTE) as defined in OAC rule 3745-31-01 and OAC rule 3745-77-01.

Pollutant	Emissions before controls (max) (lb/hr)	Actual emissions (lb/hr)	Actual emissions (ton/year)	Requested Allowable (lb/hr)	Requested Allowable (ton/year)
Particulate emissions (PE) (formerly particulate matter, PM)	41.66	0.07	0.32	0.07	0.32
PM_{10} (PM < 10 microns in diameter)	41.66	0.07	0.32	0.07	0.32
Sulfur dioxide (SO_2)	0	0	0	0	0
Nitrogen oxides (NO_x)	0	0	0	0	0
Carbon monoxide (CO)	0	0	0	0	0
Organic compounds (OC)	0	0	0	0	0
Volatile organic compounds (VOC)	0	0	0	0	0
Total HAPs	0	0	0	0	0
Highest single HAP:	0	0	0	0	0
Air Toxics (see instructions):	0	0	0	0	0

Provide your calculations as an attachment and explain how all process variables and emission factors were selected. Note the emissions factor(s) employed and document the origin. Example: AP-42, Table 4.4-3 (8/97); stack test, Method 5, 4/96; mass balance based on MSDS; etc.

Section II - Specific Air Contaminant Source Information

5. **Does this air contaminant source employ emissions control equipment?**

☒ **Yes** - fill out the applicable information below.

☐ **No** - proceed to item # 6.

Note: Pollutant abbreviations used below: Particulates = PE; Organic compounds = OC; Sulfur dioxide = SO_2; Nitrogen oxides = NOx; Carbon monoxide = CO

☐ **Cyclone/Multiclone**

Manufacturer: _____ Year installed: _____
What do you call this control equipment: _____
Pollutant(s) controlled: ☐ PE ☐ OC ☐ SO_2 ☐ NOx ☐ CO ☐ Other _____
Estimated capture efficiency (%): _____ Basis for efficiency: _____
Design control efficiency (%): _____ Basis for efficiency: _____
Type: ☐ Cyclone ☐ Multiclone ☐ Rotoclone ☐ Other _____
☐ This is the only control equipment on this air contaminant source
If no, this control equipment is: ☐ Primary ☐ Secondary ☐ Parallel
List any other air contaminant sources that are also vented to this control equipment:
_____

☒ **Fabric Filter/Baghouse**

Manufacturer: TO BE DETERMINED Year installed: NEW FACILITY
What do you call this control equipment: FILLING VESSEL FILTER 5
Pollutant(s) controlled: ☒ PE ☐ OC ☐ SO_2 ☐ NOx ☐ CO ☐ Other _____
Estimated capture efficiency (%):100 Basis for efficiency: ENGINEERING DESIGN
Design control efficiency (%):99.9 Basis for efficiency: LITERATURE
Operating pressure drop range (inches of water): Minimum: 3 Maximum: 6
Pressure type: ☐ Negative pressure ☒ Positive pressure
Fabric cleaning mechanism: ☐ Reverse air ☒ Pulse jet ☐ Shaker ☐ Other _____
☐ Lime injection or fabric coating agent used: Type: _____ Feed rate: _____
☒ This is the only control equipment on this air contaminant source
If no, this control equipment is: ☐ Primary ☐ Secondary ☐ Parallel
List any other air contaminant sources that are also vented to this control equipment:
_____

☐ **Wet Scrubber**

Manufacturer: _____ Year installed: _____
What do you call this control equipment: _____
Pollutant(s) controlled: ☐ PE ☐ OC ☐ SO_2 ☐ NOx ☐ CO ☐ Other _____
Estimated capture efficiency (%): _____ Basis for efficiency: _____
Design control efficiency (%): _____ Basis for efficiency: _____
Type: ☐ Spray chamber ☐ Packed bed ☐ Impingement ☐ Venturi ☐ Other _____
Operating pressure drop range (inches of water): Minimum: _____ Maximum: _____
pH range for scrubbing liquid: Minimum: _____ Maximum: _____
Scrubbing liquid flow rate (gal/min): _____
Is scrubber liquid recirculated? ☐ Yes ☐ No
Water supply pressure (psig): _____ NOTE: This item for spray chambers only.
☐ This is the only control equipment on this air contaminant source
If no, this control equipment is: ☐ Primary ☐ Secondary ☐ Parallel
List any other air contaminant sources that are also vented to this control equipment:
_____

☐ **Electrostatic Precipitator**

Manufacturer: _____ Year installed: _____
What do you call this control equipment: _____
Pollutant(s) controlled: ☐ PE ☐ OC ☐ SO_2 ☐ NOx ☐ CO ☐ Other _____
Estimated capture efficiency (%): _____ Basis for efficiency: _____
Design control efficiency (%): _____ Basis for efficiency: _____

Section II - Specific Air Contaminant Source Information

Type: ☐ Plate-wire ☐ Flat-plate ☐ Tubular ☐ Wet ☐ Other _____
Number of operating fields: _____

☐ This is the only control equipment on this air contaminant source
If no, this control equipment is: ☐ Primary ☐ Secondary ☐ Parallel
List any other air contaminant sources that are also vented to this control equipment:
_____

☐ **Concentrator**
Manufacturer: _____ Year installed: _____
What do you call this control equipment: _____
Pollutant(s) controlled: ☐ PE ☐ OC ☐ SO_2 ☐ NOx ☐ CO ☐ Other _____
Estimated capture efficiency (%):_____ Basis for efficiency: _____
Design regeneration cycle time (minutes): _____
Minimum desorption air stream temperature (°F): _____
Rotational rate (revolutions/hour): _____
☐ This is the only control equipment on this air contaminant source
If no, this control equipment is: ☐ Primary ☐ Secondary ☐ Parallel
List any other air contaminant sources that are also vented to this control equipment:
_____

☐ **Catalytic Incinerator**
Manufacturer: _____ Year installed: _____
What do you call this control equipment: _____
Pollutant(s) controlled: ☐ PE ☐ OC ☐ SO_2 ☐ NOx ☐ CO ☐ Other _____
Estimated capture efficiency (%):_____ Basis for efficiency: _____
Design control efficiency (%):_____ Basis for efficiency: _____
Minimum inlet gas temperature (°F): _____
Combustion chamber residence time (seconds): _____
Minimum temperature difference (°F) across catalyst during air contaminant source operation: _____
☐ This is the only control equipment on this air contaminant source
If no, this control equipment is: ☐ Primary ☐ Secondary ☐ Parallel
List any other air contaminant sources that are also vented to this control equipment:
_____

☐ **Thermal Incinerator/Thermal Oxidizer**
Manufacturer: _____ Year installed: _____
What do you call this control equipment: _____
Pollutant(s) controlled: ☐ PE ☐ OC ☐ SO_2 ☐ NOx ☐ CO ☐ Other _____
Estimated capture efficiency (%):_____ Basis for efficiency: _____
Design control efficiency (%):_____ Basis for efficiency: _____
Minimum operating temperature (°F) and location: _____ (See line by line instructions.)
Combustion chamber residence time (seconds): _____
☐ This is the only control equipment on this air contaminant source
If no, this control equipment is: ☐ Primary ☐ Secondary ☐ Parallel
List any other air contaminant sources that are also vented to this control equipment:
_____

☐ **Flare**
Manufacturer: _____ Year installed: _____
What do you call this control equipment: _____
Pollutant(s) controlled: ☐ PE ☐ OC ☐ SO_2 ☐ NOx ☐ CO ☐ Other _____
Estimated capture efficiency (%):_____ Basis for efficiency: _____
Design control efficiency (%):_____ Basis for efficiency: _____
Type: ☐ Enclosed ☐ Elevated (open)
Ignition device: ☐ Electric arc ☐ Pilot flame
Flame presence sensor: ☐ Yes ☐ No
☐ This is the only control equipment on this air contaminant source
If no, this control equipment is: ☐ Primary ☐ Secondary ☐ Parallel
List any other air contaminant sources that are also vented to this control equipment:

Section II - Specific Air Contaminant Source Information

☐ **Condenser**
Manufacturer: _____ Year installed: _____
What do you call this control equipment: _____
Pollutant(s) controlled: ☐ PE ☐ OC ☐ SO_2 ☐ NOx ☐ CO ☐ Other _____
Estimated capture efficiency (%):_____ Basis for efficiency: _____
Design control efficiency (%):_____ Basis for efficiency: _____

Type: ☐ Indirect contact ☐ Direct contact
Maximum exhaust gas temperature (°F) during air contaminant source operation: _____
Coolant type: _____
Design coolant temperature (°F): Minimum _____ Maximum _____
Design coolant flow rate (gpm): _____
☐ This is the only control equipment on this air contaminant source
If no, this control equipment is: ☐ Primary ☐ Secondary ☐ Parallel
List any other air contaminant sources that are also vented to this control equipment:
_____

☐ **Carbon Absorber**
Manufacturer: _____ Year installed: _____
What do you call this control equipment: _____
Pollutant(s) controlled: ☐ PE ☐ OC ☐ SO_2 ☐ NOx ☐ CO ☐ Other _____
Estimated capture efficiency (%):_____ Basis for efficiency: _____
Design control efficiency (%):_____ Basis for efficiency: _____
Type: ☐ On-site regenerative ☐ Disposable
Maximum design outlet organic compound concentration (ppmv): _____
Carbon replacement frequency or regeneration cycle time (specify units): _____
Maximum temperature of the carbon bed, after regeneration (including any cooling cycle): _____
☐ This is the only control equipment on this air contaminant source
If no, this control equipment is: ☐ Primary ☐ Secondary ☐ Parallel
List any other air contaminant sources that are also vented to this control equipment:
_____

☐ **Dry Scrubber**
Manufacturer: _____ Year installed: _____
What do you call this control equipment: _____
Pollutant(s) controlled: ☐ PE ☐ OC ☐ SO_2 ☐ NOx ☐ CO ☐ Other _____
Estimated capture efficiency (%):_____ Basis for efficiency: _____
Design control efficiency (%):_____ Basis for efficiency: _____
Reagent(s) used: Type: _____ Injection rate(s): _____
Operating pressure drop range (inches of water): Minimum: _____ Maximum: _____
☐ This is the only control equipment on this air contaminant source
If no, this control equipment is: ☐ Primary ☐ Secondary ☐ Parallel
List any other air contaminant sources that are also vented to this control equipment:
_____

☐ **Paint booth filter**
Type: ☐ Paper ☐ Fiberglass ☐ Water curtain ☐ Other _____
Design control efficiency (%):_____ Basis for efficiency: _____

☐ **Other**, describe _____
Manufacturer: _____ Year installed: _____
What do you call this control equipment: _____
Pollutant(s) controlled: ☐ PE ☐ OC ☐ SO_2 ☐ NOx ☐ CO ☐ Other
Estimated capture efficiency (%): _____ Basis for efficiency: _____

Design control efficiency (%):_____ Basis for efficiency: _____
☐ This is the only control equipment on this air contaminant source
If no, this control equipment is: ☐ Primary ☐ Secondary ☐ Parallel

Section II - Specific Air Contaminant Source Information

List any other air contaminant sources that are also vented to this control equipment:

6. Attach a Process or Activity Flow Diagram to this application for each air contaminant source included in the application. The diagram should indicate their relationships to one another. See the line by line PTI instructions for additional information.

7. Emissions egress point(s) information: PTIs which allow total emissions in excess of the thresholds listed below will be subject to an air quality modeling analysis. This analysis is to assure that the impact from the requested project will not exceed Ohio=s Acceptable Incremental Impacts for criteria pollutants and/or Maximum Allowable Ground Level Concentrations (MAGLC) for air toxics. Permit requests that would have unacceptable impacts can not be approved as proposed. See the line by line PTI instructions for additional information.

   Complete the tables below if the requested allowable annual emission rate for this PTI exceeds any of the following:

   - Particulate Matter (PM10): 10 tons per year
   - Sulfur Dioxide (SO2): 25 tons per year
   - Nitrogen Oxides (NOx): 25 tons per year
   - Carbon Monoxide (CO): 100 tons per year
   - Air Toxic: 1 ton per year. An air toxic is any air pollutant for which the American Council of Governmental Industrial Hygienists (ACGIH) has established a Threshold Limit Value (TLV).

   Complete Table 7-A below for each stack emissions egress point. An egress point is a point at which emissions from an air contaminant source are released into the ambient (outside) air. List each individual egress point on a separate line.

Table 7-A, Stack Egress Point Information

Company Name or ID for the Egress Point (examples: Stack A; Boiler Stack; etc.)	Type Code *	Stack Egress Point Shape and Dimensions (in)(examples: round 10 inch ID; rectangular 14 X 16 inches; etc.)	Stack Egress Point Height from the Ground (ft)	Stack Temp. at Max. Capacity (F)	Stack Flow Rate at Max. Capacity (ACFM)	Minimum Distance to the Property Line (ft)
FILLING VESSEL VENT 5	A	Rectangular: 2 FT X 4 FT	250	200	2,150	1,000

*Type codes for stack egress points:

A. vertical stack (unobstructed): There are no obstructions to upward flow in or on the stack such as a rain cap.
B. vertical stack (obstructed): There are obstructions to the upward flow, such as a rain cap, which prevents or inhibits the air flow in a vertical direction.
C. non-vertical stack: The stack directs the air flow in a direction which is not directly upward.

Complete Table 7-B below for each fugitive emissions egress point. List each individual egress point on a separate line. Refer to the description of the fugitive egress point type codes below the table for use in completing the type code column of the table. For air contaminant sources like roadways and storage piles, only the first 5 columns need to be completed. For an air contaminant source with multiple fugitive emissions egress points, include only the primary egress points.

Table 7-B, Fugitive Egress Point Information

Company ID for the Egress Point (examples; Garage Door B, Building C; Roof Monitor; etc.)	Type Code*	Egress Point Description (examples: garage door, 12 X 30 feet, west wall; outside gravel storage piles; etc.)	Fugitive Egress Point Height from the Ground (ft)	Minimum Distance to the Property Line (ft)	Exit Gas Temp. (F)

*Type codes for fugitive egress point:

Section II - Specific Air Contaminant Source Information

D. door or window
E. other opening in the building without a duct
F. no stack and no building enclosing the air contaminant source (e.g., roadways)

Complete Table 7-C below for each Stack Egress Point identified in Table 7-A above. In each case, use the dimensions of the largest nearby building, building segment or structure. List each individual egress point on a separate line. Use the same Company Name or ID for the Egress Point in Table 7-C that was used in Table 7-A. See the line by line PTI instructions for additional information.

Table 7-C, Egress Point Additional Information (Add rows as necessary)			
Company ID or Name for the Egress Point	**Building Height (ft)**	**Building Width (ft)**	**Building Length (ft)**
FILLING VESSEL VENT 5	200	70	250

8. Request for Federally Enforceable Limits

As part of this permit application, do you wish to propose voluntary restrictions to limit emissions in order to avoid specific requirements listed below, (i.e., are you requesting federally enforceable limits to obtain synthetic minor status)?

☐ yes
☒ no
☐ not sure - please contact me if this affects me

If yes, why are you requesting federally enforceable limits? Check all that apply.

a. ☐ to avoid being a major source (see OAC rule 3745-77-01)
b. ☐ to avoid being a major MACT source (see OAC rule 3745-31-01)
c. ☐ to avoid being a major modification (see OAC rule 3745-31-01)
d. ☐ to avoid being a major stationary source (see OAC rule 3745-31-01)
e. ☐ to avoid an air dispersion modeling requirement (see Engineering Guide # 69)
f. ☐ to avoid another requirement. Describe: _____

If you checked a., b. or d., please attach a facility-wide potential to emit (PTE) analysis (for each pollutant) and synthetic minor strategy to this application. (See line by line instructions for definition of PTE.) If you checked c., please attach a net emission change analysis to this application.

9. If this air contaminant source utilizes any continuous emissions monitoring equipment for indicating or demonstrating compliance, complete the following table. This does not include continuous parametric monitoring systems.

Company ID for Egress Point	**Type of Monitor**	**Applicable performance specification (40 CFR 60, Appendix B)**	**Pollutant(s) Monitored**

10. Do you wish to permit this air contaminant source as a portable source, allowing relocation within the state in accordance with OAC rule 3745-31-03 or OAC rule 3745-31-05?

☐ yes - Note: notification requirements in rules cited above must be followed.
☒ no

Section II - Specific Air Contaminant Source Information

11. The appropriate Emissions Activity Category (EAC) form(s) must be completed and attached for each air contaminant source. At least one complete EAC form must be submitted for each air contaminant source for the application to be considered complete. Refer to the list attached to the PTI instructions.

Section II - Specific Air Contaminant Source Information

NOTE: One copy of this section should be filled out for each air contaminant source covered by this PTI application. See the line by line PTI instructions for additional information.

1. Company identification (name for air contaminant source for which you are applying): FILLING VESSEL VENT 6

2. List all equipment that are part of this air contaminant source: FILLING VESSEL VENT 6

3. Air Contaminant Source Installation or Modification Schedule (must be completed regardless of date of installation or modification):

   When did/will you begin to install or modify the air contaminant source? (month/year) SECOND QUARTER 2008

   When did/will you begin to operate the air contaminant source? (month/year) THIRD QUARTER 2011 **OR** after issuance of PTI _____

4. Emissions Information: The following table requests information needed to determine the applicable requirements and the compliance status of this air contaminant source with those requirements. Suggestions for how to estimate emissions may be found in the instructions to the Emissions Activity Category (EAC) forms required with this application. If you need further assistance, contact your Ohio EPA permit representative.

   - If total potential emissions of HAPs or any Air Toxic is greater than 1 ton/yr, fill in the table for that (those) pollutant(s). For all other pollutants, if "Emissions before controls (max), lb/hr" multiplied by 24 hours/day is greater than 10 lb/day, fill in the table for that pollutant.
   - If you have no add-on control equipment, "Emissions before controls= will be the same as "Actual emissions"
   - Annual emissions should be based on operating 8760 hr/yr unless you are requesting operating restrictions to limit emissions in line # 8 or have described inherent limitations below.
   - If you use units other than lb/hr or ton/yr, specify the units used (e.g., gr/dscf, lb/ton charged, lb/MMBtu, ton/12-months).
   - Requested Allowable (ton/yr) is often equivalent to Potential to Emit (PTE) as defined in OAC rule 3745-31-01 and OAC rule 3745-77-01.

Pollutant	Emissions before controls (max) (lb/hr)	Actual emissions (lb/hr)	Actual emissions (ton/year)	Requested Allowable (lb/hr)	Requested Allowable (ton/year)
Particulate emissions (PE) (formerly particulate matter, PM)	41.66	0.07	0.32	0.07	0.32
PM_{10} (PM < 10 microns in diameter)	41.66	0.07	0.32	0.07	0.32
Sulfur dioxide (SO_2)	0	0	0	0	0
Nitrogen oxides (NO_x)	0	0	0	0	0
Carbon monoxide (CO)	0	0	0	0	0
Organic compounds (OC)	0	0	0	0	0
Volatile organic compounds (VOC)	0	0	0	0	0
Total HAPs	0	0	0	0	0
Highest single HAP:	0	0	0	0	0
Air Toxics (see instructions):	0	0	0	0	0

Provide your calculations as an attachment and explain how all process variables and emission factors were selected. Note the emissions factor(s) employed and document the origin. Example: AP-42, Table 4.4-3 (8/97); stack test, Method 5, 4/96; mass balance based on MSDS; etc.

Section II - Specific Air Contaminant Source Information

5. **Does this air contaminant source employ emissions control equipment?**

☒ **Yes** - fill out the applicable information below.

☐ **No** - proceed to item # 6.

Note: Pollutant abbreviations used below: Particulates = PE; Organic compounds = OC; Sulfur dioxide = SO_2; Nitrogen oxides = NOx; Carbon monoxide = CO

☐ **Cyclone/Multiclone**
Manufacturer: _____ Year installed: _____
What do you call this control equipment: _____
Pollutant(s) controlled: ☐ PE ☐ OC ☐ SO_2 ☐ NOx ☐ CO ☐ Other _____
Estimated capture efficiency (%): _____ Basis for efficiency: _____
Design control efficiency (%): _____ Basis for efficiency: _____
Type: ☐ Cyclone ☐ Multiclone ☐ Rotoclone ☐ Other _____
☐ This is the only control equipment on this air contaminant source
If no, this control equipment is: ☐ Primary ☐ Secondary ☐ Parallel
List any other air contaminant sources that are also vented to this control equipment:
_____

☒ **Fabric Filter/Baghouse**
Manufacturer: TO BE DETERMINED Year installed: NEW FACILITY
What do you call this control equipment: FILLING VESSEL FILTER 6
Pollutant(s) controlled: ☒ PE ☐ OC ☐ SO_2 ☐ NOx ☐ CO ☐ Other _____
Estimated capture efficiency (%):100 Basis for efficiency: ENGINEERING DESIGN
Design control efficiency (%):99.9 Basis for efficiency: LITERATURE
Operating pressure drop range (inches of water): Minimum: 3 Maximum: 6
Pressure type: ☐ Negative pressure ☒ Positive pressure
Fabric cleaning mechanism: ☐ Reverse air ☒ Pulse jet ☐ Shaker ☐ Other _____
☐ Lime injection or fabric coating agent used: Type: _____ Feed rate: _____
☒ This is the only control equipment on this air contaminant source
If no, this control equipment is: ☐ Primary ☐ Secondary ☐ Parallel
List any other air contaminant sources that are also vented to this control equipment:
_____

☐ **Wet Scrubber**
Manufacturer: _____ Year installed: _____
What do you call this control equipment: _____
Pollutant(s) controlled: ☐ PE ☐ OC ☐ SO_2 ☐ NOx ☐ CO ☐ Other _____
Estimated capture efficiency (%): _____ Basis for efficiency: _____
Design control efficiency (%): _____ Basis for efficiency: _____
Type: ☐ Spray chamber ☐ Packed bed ☐ Impingement ☐ Venturi ☐ Other _____
Operating pressure drop range (inches of water): Minimum: _____ Maximum: _____
pH range for scrubbing liquid: Minimum: _____ Maximum: _____
Scrubbing liquid flow rate (gal/min): _____
Is scrubber liquid recirculated? ☐ Yes ☐ No
Water supply pressure (psig): _____ NOTE: This item for spray chambers only.
☐ This is the only control equipment on this air contaminant source
If no, this control equipment is: ☐ Primary ☐ Secondary ☐ Parallel
List any other air contaminant sources that are also vented to this control equipment:
_____

☐ **Electrostatic Precipitator**
Manufacturer: _____ Year installed: _____
What do you call this control equipment: _____
Pollutant(s) controlled: ☐ PE ☐ OC ☐ SO_2 ☐ NOx ☐ CO ☐ Other _____
Estimated capture efficiency (%): _____ Basis for efficiency: _____
Design control efficiency (%): _____ Basis for efficiency: _____

Section II - Specific Air Contaminant Source Information

Type: ☐ Plate-wire ☐ Flat-plate ☐ Tubular ☐ Wet ☐ Other _____
Number of operating fields: _____

☐ This is the only control equipment on this air contaminant source
If no, this control equipment is: ☐ Primary ☐ Secondary ☐ Parallel
List any other air contaminant sources that are also vented to this control equipment:
_____

☐ **Concentrator**
Manufacturer: _____ Year installed: _____
What do you call this control equipment: _____
Pollutant(s) controlled: ☐ PE ☐ OC ☐ SO_2 ☐ NOx ☐ CO ☐ Other _____
Estimated capture efficiency (%):_____ Basis for efficiency: _____
Design regeneration cycle time (minutes): _____
Minimum desorption air stream temperature (°F): _____
Rotational rate (revolutions/hour): _____
☐ This is the only control equipment on this air contaminant source
If no, this control equipment is: ☐ Primary ☐ Secondary ☐ Parallel
List any other air contaminant sources that are also vented to this control equipment:
_____

☐ **Catalytic Incinerator**
Manufacturer: _____ Year installed: _____
What do you call this control equipment: _____
Pollutant(s) controlled: ☐ PE ☐ OC ☐ SO_2 ☐ NOx ☐ CO ☐ Other _____
Estimated capture efficiency (%):_____ Basis for efficiency: _____
Design control efficiency (%):_____ Basis for efficiency: _____
Minimum inlet gas temperature (°F): _____
Combustion chamber residence time (seconds): _____
Minimum temperature difference (°F) across catalyst during air contaminant source operation: _____
☐ This is the only control equipment on this air contaminant source
If no, this control equipment is: ☐ Primary ☐ Secondary ☐ Parallel
List any other air contaminant sources that are also vented to this control equipment:
_____

☐ **Thermal Incinerator/Thermal Oxidizer**
Manufacturer: _____ Year installed: _____
What do you call this control equipment: _____
Pollutant(s) controlled: ☐ PE ☐ OC ☐ SO_2 ☐ NOx ☐ CO ☐ Other _____
Estimated capture efficiency (%):_____ Basis for efficiency: _____
Design control efficiency (%):_____ Basis for efficiency: _____
Minimum operating temperature (°F) and location: _____ (See line by line instructions.)
Combustion chamber residence time (seconds): _____
☐ This is the only control equipment on this air contaminant source
If no, this control equipment is: ☐ Primary ☐ Secondary ☐ Parallel
List any other air contaminant sources that are also vented to this control equipment:
_____

☐ **Flare**
Manufacturer: _____ Year installed: _____
What do you call this control equipment: _____
Pollutant(s) controlled: ☐ PE ☐ OC ☐ SO_2 ☐ NOx ☐ CO ☐ Other _____
Estimated capture efficiency (%):_____ Basis for efficiency: _____
Design control efficiency (%):_____ Basis for efficiency: _____
Type: ☐ Enclosed ☐ Elevated (open)
Ignition device: ☐ Electric arc ☐ Pilot flame
Flame presence sensor: ☐ Yes ☐ No
☐ This is the only control equipment on this air contaminant source
If no, this control equipment is: ☐ Primary ☐ Secondary ☐ Parallel
List any other air contaminant sources that are also vented to this control equipment:

Section II - Specific Air Contaminant Source Information

☐ **Condenser**
Manufacturer: _____ Year installed: _____
What do you call this control equipment: _____
Pollutant(s) controlled: ☐ PE ☐ OC ☐ SO_2 ☐ NOx ☐ CO ☐ Other _____
Estimated capture efficiency (%):_____ Basis for efficiency: _____
Design control efficiency (%):_____ Basis for efficiency: _____

Type: ☐ Indirect contact ☐ Direct contact
Maximum exhaust gas temperature (°F) during air contaminant source operation: _____
Coolant type: _____
Design coolant temperature (°F): Minimum _____ Maximum _____
Design coolant flow rate (gpm): _____
☐ This is the only control equipment on this air contaminant source
If no, this control equipment is: ☐ Primary ☐ Secondary ☐ Parallel
List any other air contaminant sources that are also vented to this control equipment:
_____

☐ **Carbon Absorber**
Manufacturer: _____ Year installed: _____
What do you call this control equipment: _____
Pollutant(s) controlled: ☐ PE ☐ OC ☐ SO_2 ☐ NOx ☐ CO ☐ Other _____
Estimated capture efficiency (%):_____ Basis for efficiency: _____
Design control efficiency (%):_____ Basis for efficiency: _____
Type: ☐ On-site regenerative ☐ Disposable
Maximum design outlet organic compound concentration (ppmv): _____
Carbon replacement frequency or regeneration cycle time (specify units): _____
Maximum temperature of the carbon bed, after regeneration (including any cooling cycle): _____
☐ This is the only control equipment on this air contaminant source
If no, this control equipment is: ☐ Primary ☐ Secondary ☐ Parallel
List any other air contaminant sources that are also vented to this control equipment:
_____

☐ **Dry Scrubber**
Manufacturer: _____ Year installed: _____
What do you call this control equipment: _____
Pollutant(s) controlled: ☐ PE ☐ OC ☐ SO_2 ☐ NOx ☐ CO ☐ Other _____
Estimated capture efficiency (%):_____ Basis for efficiency: _____
Design control efficiency (%):_____ Basis for efficiency: _____
Reagent(s) used: Type: _____ Injection rate(s): _____
Operating pressure drop range (inches of water): Minimum: _____ Maximum: _____
☐ This is the only control equipment on this air contaminant source
If no, this control equipment is: ☐ Primary ☐ Secondary ☐ Parallel
List any other air contaminant sources that are also vented to this control equipment:
_____

☐ **Paint booth filter**
Type: ☐ Paper ☐ Fiberglass ☐ Water curtain ☐ Other _____
Design control efficiency (%):_____ Basis for efficiency: _____

☐ **Other**, describe _____
Manufacturer: _____ Year installed: _____
What do you call this control equipment: _____
Pollutant(s) controlled: ☐ PE ☐ OC ☐ SO_2 ☐ NOx ☐ CO ☐ Other
Estimated capture efficiency (%): _____ Basis for efficiency: _____

Design control efficiency (%):_____ Basis for efficiency: _____
☐ This is the only control equipment on this air contaminant source
If no, this control equipment is: ☐ Primary ☐ Secondary ☐ Parallel

Section II - Specific Air Contaminant Source Information

List any other air contaminant sources that are also vented to this control equipment:

_____

6. Attach a Process or Activity Flow Diagram to this application for each air contaminant source included in the application. The diagram should indicate their relationships to one another. See the line by line PTI instructions for additional information.

7. Emissions egress point(s) information: PTIs which allow total emissions in excess of the thresholds listed below will be subject to an air quality modeling analysis. This analysis is to assure that the impact from the requested project will not exceed Ohio=s Acceptable Incremental Impacts for criteria pollutants and/or Maximum Allowable Ground Level Concentrations (MAGLC) for air toxics. Permit requests that would have unacceptable impacts can not be approved as proposed. See the line by line PTI instructions for additional information.

   Complete the tables below if the requested allowable annual emission rate for this PTI exceeds any of the following:

   - Particulate Matter (PM10): 10 tons per year
   - Sulfur Dioxide (SO2): 25 tons per year
   - Nitrogen Oxides (NOx): 25 tons per year
   - Carbon Monoxide (CO): 100 tons per year
   - Air Toxic: 1 ton per year. An air toxic is any air pollutant for which the American Council of Governmental Industrial Hygienists (ACGIH) has established a Threshold Limit Value (TLV).

   Complete Table 7-A below for each stack emissions egress point. An egress point is a point at which emissions from an air contaminant source are released into the ambient (outside) air. List each individual egress point on a separate line.

Table 7-A, Stack Egress Point Information

Company Name or ID for the Egress Point (examples: Stack A; Boiler Stack; etc.)	Type Code *	Stack Egress Point Shape and Dimensions (in)(examples: round 10 inch ID; rectangular 14 X 16 inches; etc.)	Stack Egress Point Height from the Ground (ft)	Stack Temp. at Max. Capacity (F)	Stack Flow Rate at Max. Capacity (ACFM)	Minimum Distance to the Property Line (ft)
FILLING VESSEL VENT 6	A	Rectangular: 2 FT X 4 FT	250	200	2,150	1,000

*Type codes for stack egress points:

A. vertical stack (unobstructed): There are no obstructions to upward flow in or on the stack such as a rain cap.
B. vertical stack (obstructed): There are obstructions to the upward flow, such as a rain cap, which prevents or inhibits the air flow in a vertical direction.
C. non-vertical stack: The stack directs the air flow in a direction which is not directly upward.

Complete Table 7-B below for each fugitive emissions egress point. List each individual egress point on a separate line. Refer to the description of the fugitive egress point type codes below the table for use in completing the type code column of the table. For air contaminant sources like roadways and storage piles, only the first 5 columns need to be completed. For an air contaminant source with multiple fugitive emissions egress points, include only the primary egress points.

Table 7-B, Fugitive Egress Point Information

Company ID for the Egress Point (examples; Garage Door B, Building C; Roof Monitor; etc.)	Type Code*	Egress Point Description (examples: garage door, 12 X 30 feet, west wall; outside gravel storage piles; etc.)	Fugitive Egress Point Height from the Ground (ft)	Minimum Distance to the Property Line (ft)	Exit Gas Temp. (F)

*Type codes for fugitive egress point:

Section II - Specific Air Contaminant Source Information

D. door or window
E. other opening in the building without a duct
F. no stack and no building enclosing the air contaminant source (e.g., roadways)

Complete Table 7-C below for each Stack Egress Point identified in Table 7-A above. In each case, use the dimensions of the largest nearby building, building segment or structure. List each individual egress point on a separate line. Use the same Company Name or ID for the Egress Point in Table 7-C that was used in Table 7-A. See the line by line PTI instructions for additional information.

Table 7-C, Egress Point Additional Information (Add rows as necessary)			
Company ID or Name for the Egress Point	**Building Height (ft)**	**Building Width (ft)**	**Building Length (ft)**
FILLING VESSEL VENT 6	200	70	250

8. Request for Federally Enforceable Limits

As part of this permit application, do you wish to propose voluntary restrictions to limit emissions in order to avoid specific requirements listed below, (i.e., are you requesting federally enforceable limits to obtain synthetic minor status)?

☐ yes
☒ no
☐ not sure - please contact me if this affects me

If yes, why are you requesting federally enforceable limits? Check all that apply.

a. ☐ to avoid being a major source (see OAC rule 3745-77-01)
b. ☐ to avoid being a major MACT source (see OAC rule 3745-31-01)
c. ☐ to avoid being a major modification (see OAC rule 3745-31-01)
d. ☐ to avoid being a major stationary source (see OAC rule 3745-31-01)
e. ☐ to avoid an air dispersion modeling requirement (see Engineering Guide # 69)
f. ☐ to avoid another requirement. Describe: _____

If you checked a., b. or d., please attach a facility-wide potential to emit (PTE) analysis (for each pollutant) and synthetic minor strategy to this application. (See line by line instructions for definition of PTE.) If you checked c., please attach a net emission change analysis to this application.

9. If this air contaminant source utilizes any continuous emissions monitoring equipment for indicating or demonstrating compliance, complete the following table. This does not include continuous parametric monitoring systems.

Company ID for Egress Point	**Type of Monitor**	**Applicable performance specification (40 CFR 60, Appendix B)**	**Pollutant(s) Monitored**

10. Do you wish to permit this air contaminant source as a portable source, allowing relocation within the state in accordance with OAC rule 3745-31-03 or OAC rule 3745-31-05?

☐ yes - Note: notification requirements in rules cited above must be followed.
☒ no

Section II - Specific Air Contaminant Source Information

11. The appropriate Emissions Activity Category (EAC) form(s) must be completed and attached for each air contaminant source. At least one complete EAC form must be submitted for each air contaminant source for the application to be considered complete. Refer to the list attached to the PTI instructions.

Section II - Specific Air Contaminant Source Information

NOTE: One copy of this section should be filled out for each air contaminant source covered by this PTI application. See the line by line PTI instructions for additional information.

1. Company identification (name for air contaminant source for which you are applying): FILLING VESSEL VENT 7

2. List all equipment that are part of this air contaminant source: FILLING VESSEL VENT 7

3. Air Contaminant Source Installation or Modification Schedule (must be completed regardless of date of installation or modification):

   When did/will you begin to install or modify the air contaminant source? (month/year) SECOND QUARTER 2008

   When did/will you begin to operate the air contaminant source? (month/year) THIRD QUARTER 2011 **OR** after issuance of PTI _____

4. Emissions Information: The following table requests information needed to determine the applicable requirements and the compliance status of this air contaminant source with those requirements. Suggestions for how to estimate emissions may be found in the instructions to the Emissions Activity Category (EAC) forms required with this application. If you need further assistance, contact your Ohio EPA permit representative.

   - If total potential emissions of HAPs or any Air Toxic is greater than 1 ton/yr, fill in the table for that (those) pollutant(s). For all other pollutants, if "Emissions before controls (max), lb/hr" multiplied by 24 hours/day is greater than 10 lb/day, fill in the table for that pollutant.
   - If you have no add-on control equipment, "Emissions before controls= will be the same as "Actual emissions"
   - Annual emissions should be based on operating 8760 hr/yr unless you are requesting operating restrictions to limit emissions in line # 8 or have described inherent limitations below.
   - If you use units other than lb/hr or ton/yr, specify the units used (e.g., gr/dscf, lb/ton charged, lb/MMBtu, ton/12-months).
   - Requested Allowable (ton/yr) is often equivalent to Potential to Emit (PTE) as defined in OAC rule 3745-31-01 and OAC rule 3745-77-01.

Pollutant	Emissions before controls (max) (lb/hr)	Actual emissions (lb/hr)	Actual emissions (ton/year)	Requested Allowable (lb/hr)	Requested Allowable (ton/year)
Particulate emissions (PE) (formerly particulate matter, PM)	41.66	0.07	0.32	0.07	0.32
PM_{10} (PM < 10 microns in diameter)	41.66	0.07	0.32	0.07	0.32
Sulfur dioxide (SO_2)	0	0	0	0	0
Nitrogen oxides (NO_x)	0	0	0	0	0
Carbon monoxide (CO)	0	0	0	0	0
Organic compounds (OC)	0	0	0	0	0
Volatile organic compounds (VOC)	0	0	0	0	0
Total HAPs	0	0	0	0	0
Highest single HAP:	0	0	0	0	0
Air Toxics (see instructions):	0	0	0	0	0

Provide your calculations as an attachment and explain how all process variables and emission factors were selected. Note the emissions factor(s) employed and document the origin. Example: AP-42, Table 4.4-3 (8/97); stack test, Method 5, 4/96; mass balance based on MSDS; etc.

Section II - Specific Air Contaminant Source Information

5. **Does this air contaminant source employ emissions control equipment?**

☒ **Yes** - fill out the applicable information below.

☐ **No** - proceed to item # 6.

Note: Pollutant abbreviations used below: Particulates = PE; Organic compounds = OC; Sulfur dioxide = SO_2; Nitrogen oxides = NOx; Carbon monoxide = CO

☐ **Cyclone/Multiclone**
Manufacturer: _____ Year installed: _____
What do you call this control equipment: _____
Pollutant(s) controlled: ☐ PE ☐ OC ☐ SO_2 ☐ NOx ☐ CO ☐ Other _____
Estimated capture efficiency (%): _____ Basis for efficiency: _____
Design control efficiency (%): _____ Basis for efficiency: _____
Type: ☐ Cyclone ☐ Multiclone ☐ Rotoclone ☐ Other _____
☐ This is the only control equipment on this air contaminant source
If no, this control equipment is: ☐ Primary ☐ Secondary ☐ Parallel
List any other air contaminant sources that are also vented to this control equipment:
_____

☒ **Fabric Filter/Baghouse**
Manufacturer: TO BE DETERMINED Year installed: NEW FACILITY
What do you call this control equipment: FILLING VESSEL FILTER 7
Pollutant(s) controlled: ☒ PE ☐ OC ☐ SO_2 ☐ NOx ☐ CO ☐ Other _____
Estimated capture efficiency (%):100 Basis for efficiency: ENGINEERING DESIGN
Design control efficiency (%):99.9 Basis for efficiency: LITERATURE
Operating pressure drop range (inches of water): Minimum: 3 Maximum: 6
Pressure type: ☐ Negative pressure ☒ Positive pressure
Fabric cleaning mechanism: ☐ Reverse air ☒ Pulse jet ☐ Shaker ☐ Other _____
☐ Lime injection or fabric coating agent used: Type: _____ Feed rate: _____
☒ This is the only control equipment on this air contaminant source
If no, this control equipment is: ☐ Primary ☐ Secondary ☐ Parallel
List any other air contaminant sources that are also vented to this control equipment:
_____

☐ **Wet Scrubber**
Manufacturer: _____ Year installed: _____
What do you call this control equipment: _____
Pollutant(s) controlled: ☐ PE ☐ OC ☐ SO_2 ☐ NOx ☐ CO ☐ Other _____
Estimated capture efficiency (%): _____ Basis for efficiency: _____
Design control efficiency (%): _____ Basis for efficiency: _____
Type: ☐ Spray chamber ☐ Packed bed ☐ Impingement ☐ Venturi ☐ Other _____
Operating pressure drop range (inches of water): Minimum: _____ Maximum: _____
pH range for scrubbing liquid: Minimum: _____ Maximum: _____
Scrubbing liquid flow rate (gal/min): _____
Is scrubber liquid recirculated? ☐ Yes ☐ No
Water supply pressure (psig): _____ NOTE: This item for spray chambers only.
☐ This is the only control equipment on this air contaminant source
If no, this control equipment is: ☐ Primary ☐ Secondary ☐ Parallel
List any other air contaminant sources that are also vented to this control equipment:
_____

☐ **Electrostatic Precipitator**
Manufacturer: _____ Year installed: _____
What do you call this control equipment: _____
Pollutant(s) controlled: ☐ PE ☐ OC ☐ SO_2 ☐ NOx ☐ CO ☐ Other _____
Estimated capture efficiency (%): _____ Basis for efficiency: _____
Design control efficiency (%): _____ Basis for efficiency: _____

Section II - Specific Air Contaminant Source Information

Type: ☐ Plate-wire ☐ Flat-plate ☐ Tubular ☐ Wet ☐ Other _____
Number of operating fields: _____

☐ This is the only control equipment on this air contaminant source
If no, this control equipment is: ☐ Primary ☐ Secondary ☐ Parallel
List any other air contaminant sources that are also vented to this control equipment:
_____

☐ **Concentrator**
Manufacturer: _____ Year installed: _____
What do you call this control equipment: _____
Pollutant(s) controlled: ☐ PE ☐ OC ☐ SO_2 ☐ NOx ☐ CO ☐ Other _____
Estimated capture efficiency (%):_____ Basis for efficiency: _____
Design regeneration cycle time (minutes): _____
Minimum desorption air stream temperature (°F): _____
Rotational rate (revolutions/hour): _____
☐ This is the only control equipment on this air contaminant source
If no, this control equipment is: ☐ Primary ☐ Secondary ☐ Parallel
List any other air contaminant sources that are also vented to this control equipment:
_____

☐ **Catalytic Incinerator**
Manufacturer: _____ Year installed: _____
What do you call this control equipment: _____
Pollutant(s) controlled: ☐ PE ☐ OC ☐ SO_2 ☐ NOx ☐ CO ☐ Other _____
Estimated capture efficiency (%):_____ Basis for efficiency: _____
Design control efficiency (%):_____ Basis for efficiency: _____
Minimum inlet gas temperature (°F): _____
Combustion chamber residence time (seconds): _____
Minimum temperature difference (°F) across catalyst during air contaminant source operation: _____
☐ This is the only control equipment on this air contaminant source
If no, this control equipment is: ☐ Primary ☐ Secondary ☐ Parallel
List any other air contaminant sources that are also vented to this control equipment:
_____

☐ **Thermal Incinerator/Thermal Oxidizer**
Manufacturer: _____ Year installed: _____
What do you call this control equipment: _____
Pollutant(s) controlled: ☐ PE ☐ OC ☐ SO_2 ☐ NOx ☐ CO ☐ Other _____
Estimated capture efficiency (%):_____ Basis for efficiency: _____
Design control efficiency (%):_____ Basis for efficiency: _____
Minimum operating temperature (°F) and location: _____ (See line by line instructions.)
Combustion chamber residence time (seconds): _____
☐ This is the only control equipment on this air contaminant source
If no, this control equipment is: ☐ Primary ☐ Secondary ☐ Parallel
List any other air contaminant sources that are also vented to this control equipment:
_____

☐ **Flare**
Manufacturer: _____ Year installed: _____
What do you call this control equipment: _____
Pollutant(s) controlled: ☐ PE ☐ OC ☐ SO_2 ☐ NOx ☐ CO ☐ Other _____
Estimated capture efficiency (%):_____ Basis for efficiency: _____
Design control efficiency (%):_____ Basis for efficiency: _____
Type: ☐ Enclosed ☐ Elevated (open)
Ignition device: ☐ Electric arc ☐ Pilot flame
Flame presence sensor: ☐ Yes ☐ No
☐ This is the only control equipment on this air contaminant source
If no, this control equipment is: ☐ Primary ☐ Secondary ☐ Parallel
List any other air contaminant sources that are also vented to this control equipment:

Section II - Specific Air Contaminant Source Information

☐ **Condenser**
Manufacturer: _____ Year installed: _____
What do you call this control equipment: _____
Pollutant(s) controlled: ☐ PE ☐ OC ☐ SO_2 ☐ NOx ☐ CO ☐ Other _____
Estimated capture efficiency (%):_____ Basis for efficiency: _____
Design control efficiency (%):_____ Basis for efficiency: _____

Type: ☐ Indirect contact ☐ Direct contact
Maximum exhaust gas temperature (°F) during air contaminant source operation: _____
Coolant type: _____
Design coolant temperature (°F): Minimum _____ Maximum _____
Design coolant flow rate (gpm): _____
☐ This is the only control equipment on this air contaminant source
If no, this control equipment is: ☐ Primary ☐ Secondary ☐ Parallel
List any other air contaminant sources that are also vented to this control equipment:
_____

☐ **Carbon Absorber**
Manufacturer: _____ Year installed: _____
What do you call this control equipment: _____
Pollutant(s) controlled: ☐ PE ☐ OC ☐ SO_2 ☐ NOx ☐ CO ☐ Other _____
Estimated capture efficiency (%):_____ Basis for efficiency: _____
Design control efficiency (%):_____ Basis for efficiency: _____
Type: ☐ On-site regenerative ☐ Disposable
Maximum design outlet organic compound concentration (ppmv): _____
Carbon replacement frequency or regeneration cycle time (specify units): _____
Maximum temperature of the carbon bed, after regeneration (including any cooling cycle): _____
☐ This is the only control equipment on this air contaminant source
If no, this control equipment is: ☐ Primary ☐ Secondary ☐ Parallel
List any other air contaminant sources that are also vented to this control equipment:
_____

☐ **Dry Scrubber**
Manufacturer: _____ Year installed: _____
What do you call this control equipment: _____
Pollutant(s) controlled: ☐ PE ☐ OC ☐ SO_2 ☐ NOx ☐ CO ☐ Other _____
Estimated capture efficiency (%):_____ Basis for efficiency: _____
Design control efficiency (%):_____ Basis for efficiency: _____
Reagent(s) used: Type: _____ Injection rate(s): _____
Operating pressure drop range (inches of water): Minimum: _____ Maximum: _____
☐ This is the only control equipment on this air contaminant source
If no, this control equipment is: ☐ Primary ☐ Secondary ☐ Parallel
List any other air contaminant sources that are also vented to this control equipment:
_____

☐ **Paint booth filter**
Type: ☐ Paper ☐ Fiberglass ☐ Water curtain ☐ Other _____
Design control efficiency (%):_____ Basis for efficiency: _____

☐ **Other**, describe _____
Manufacturer: _____ Year installed: _____
What do you call this control equipment: _____
Pollutant(s) controlled: ☐ PE ☐ OC ☐ SO_2 ☐ NOx ☐ CO ☐ Other
Estimated capture efficiency (%): _____ Basis for efficiency: _____

Design control efficiency (%):_____ Basis for efficiency: _____
☐ This is the only control equipment on this air contaminant source
If no, this control equipment is: ☐ Primary ☐ Secondary ☐ Parallel

Section II - Specific Air Contaminant Source Information

List any other air contaminant sources that are also vented to this control equipment:

6. Attach a Process or Activity Flow Diagram to this application for each air contaminant source included in the application. The diagram should indicate their relationships to one another. See the line by line PTI instructions for additional information.

7. Emissions egress point(s) information: PTIs which allow total emissions in excess of the thresholds listed below will be subject to an air quality modeling analysis. This analysis is to assure that the impact from the requested project will not exceed Ohio=s Acceptable Incremental Impacts for criteria pollutants and/or Maximum Allowable Ground Level Concentrations (MAGLC) for air toxics. Permit requests that would have unacceptable impacts can not be approved as proposed. See the line by line PTI instructions for additional information.

   Complete the tables below if the requested allowable annual emission rate for this PTI exceeds any of the following:

   - Particulate Matter (PM10): 10 tons per year
   - Sulfur Dioxide (SO2): 25 tons per year
   - Nitrogen Oxides (NOx): 25 tons per year
   - Carbon Monoxide (CO): 100 tons per year
   - Air Toxic: 1 ton per year. An air toxic is any air pollutant for which the American Council of Governmental Industrial Hygienists (ACGIH) has established a Threshold Limit Value (TLV).

   Complete Table 7-A below for each stack emissions egress point. An egress point is a point at which emissions from an air contaminant source are released into the ambient (outside) air. List each individual egress point on a separate line.

Table 7-A, Stack Egress Point Information

Company Name or ID for the Egress Point (examples: Stack A; Boiler Stack; etc.)	Type Code *	Stack Egress Point Shape and Dimensions (in)(examples: round 10 inch ID; rectangular 14 X 16 inches; etc.)	Stack Egress Point Height from the Ground (ft)	Stack Temp. at Max. Capacity (F)	Stack Flow Rate at Max. Capacity (ACFM)	Minimum Distance to the Property Line (ft)
FILLING VESSEL VENT 7	A	Rectangular: 2 FT X 4 FT	250	200	2,150	1,000

*Type codes for stack egress points:

A. vertical stack (unobstructed): There are no obstructions to upward flow in or on the stack such as a rain cap.
B. vertical stack (obstructed): There are obstructions to the upward flow, such as a rain cap, which prevents or inhibits the air flow in a vertical direction.
C. non-vertical stack: The stack directs the air flow in a direction which is not directly upward.

Complete Table 7-B below for each fugitive emissions egress point. List each individual egress point on a separate line. Refer to the description of the fugitive egress point type codes below the table for use in completing the type code column of the table. For air contaminant sources like roadways and storage piles, only the first 5 columns need to be completed. For an air contaminant source with multiple fugitive emissions egress points, include only the primary egress points.

Table 7-B, Fugitive Egress Point Information

Company ID for the Egress Point (examples; Garage Door B, Building C; Roof Monitor; etc.)	Type Code*	Egress Point Description (examples: garage door, 12 X 30 feet, west wall; outside gravel storage piles; etc.)	Fugitive Egress Point Height from the Ground (ft)	Minimum Distance to the Property Line (ft)	Exit Gas Temp. (F)

*Type codes for fugitive egress point:

Section II - Specific Air Contaminant Source Information

D. door or window
E. other opening in the building without a duct
F. no stack and no building enclosing the air contaminant source (e.g., roadways)

Complete Table 7-C below for each Stack Egress Point identified in Table 7-A above. In each case, use the dimensions of the largest nearby building, building segment or structure. List each individual egress point on a separate line. Use the same Company Name or ID for the Egress Point in Table 7-C that was used in Table 7-A. See the line by line PTI instructions for additional information.

Table 7-C, Egress Point Additional Information (Add rows as necessary)

Company ID or Name for the Egress Point	Building Height (ft)	Building Width (ft)	Building Length (ft)
FILLING VESSEL VENT 7	200	70	250

8. Request for Federally Enforceable Limits

As part of this permit application, do you wish to propose voluntary restrictions to limit emissions in order to avoid specific requirements listed below, (i.e., are you requesting federally enforceable limits to obtain synthetic minor status)?

☐ yes
☒ no
☐ not sure - please contact me if this affects me

If yes, why are you requesting federally enforceable limits? Check all that apply.

a. ☐ to avoid being a major source (see OAC rule 3745-77-01)
b. ☐ to avoid being a major MACT source (see OAC rule 3745-31-01)
c. ☐ to avoid being a major modification (see OAC rule 3745-31-01)
d. ☐ to avoid being a major stationary source (see OAC rule 3745-31-01)
e. ☐ to avoid an air dispersion modeling requirement (see Engineering Guide # 69)
f. ☐ to avoid another requirement. Describe: _____

If you checked a., b. or d., please attach a facility-wide potential to emit (PTE) analysis (for each pollutant) and synthetic minor strategy to this application. (See line by line instructions for definition of PTE.) If you checked c., please attach a net emission change analysis to this application.

9. If this air contaminant source utilizes any continuous emissions monitoring equipment for indicating or demonstrating compliance, complete the following table. This does not include continuous parametric monitoring systems.

Company ID for Egress Point	Type of Monitor	Applicable performance specification (40 CFR 60, Appendix B)	Pollutant(s) Monitored

10. Do you wish to permit this air contaminant source as a portable source, allowing relocation within the state in accordance with OAC rule 3745-31-03 or OAC rule 3745-31-05?

☐ yes - Note: notification requirements in rules cited above must be followed.
☒ no

Section II - Specific Air Contaminant Source Information

11. The appropriate Emissions Activity Category (EAC) form(s) must be completed and attached for each air contaminant source. At least one complete EAC form must be submitted for each air contaminant source for the application to be considered complete. Refer to the list attached to the PTI instructions.

Section II - Specific Air Contaminant Source Information

NOTE: One copy of this section should be filled out for each air contaminant source covered by this PTI application. See the line by line PTI instructions for additional information.

1. Company identification (name for air contaminant source for which you are applying): FILLING VESSEL VENT 8

2. List all equipment that are part of this air contaminant source: FILLING VESSEL VENT 8

3. Air Contaminant Source Installation or Modification Schedule (must be completed regardless of date of installation or modification):

   When did/will you begin to install or modify the air contaminant source? (month/year) SECOND QUARTER 2008

   When did/will you begin to operate the air contaminant source? (month/year) THIRD QUARTER 2011 **OR** after issuance of PTI _____

4. Emissions Information: The following table requests information needed to determine the applicable requirements and the compliance status of this air contaminant source with those requirements. Suggestions for how to estimate emissions may be found in the instructions to the Emissions Activity Category (EAC) forms required with this application. If you need further assistance, contact your Ohio EPA permit representative.

   - If total potential emissions of HAPs or any Air Toxic is greater than 1 ton/yr, fill in the table for that (those) pollutant(s). For all other pollutants, if "Emissions before controls (max), lb/hr" multiplied by 24 hours/day is greater than 10 lb/day, fill in the table for that pollutant.
   - If you have no add-on control equipment, "Emissions before controls= will be the same as "Actual emissions"
   - Annual emissions should be based on operating 8760 hr/yr unless you are requesting operating restrictions to limit emissions in line # 8 or have described inherent limitations below.
   - If you use units other than lb/hr or ton/yr, specify the units used (e.g., gr/dscf, lb/ton charged, lb/MMBtu, ton/12-months).
   - Requested Allowable (ton/yr) is often equivalent to Potential to Emit (PTE) as defined in OAC rule 3745-31-01 and OAC rule 3745-77-01.

Pollutant	Emissions before controls (max) (lb/hr)	Actual emissions (lb/hr)	Actual emissions (ton/year)	Requested Allowable (lb/hr)	Requested Allowable (ton/year)
Particulate emissions (PE) (formerly particulate matter, PM)	41.66	0.08	0.35	0.08	0.35
PM_{10} (PM < 10 microns in diameter)	41.66	0.08	0.35	0.08	0.35
Sulfur dioxide (SO_2)	0	0	0	0	0
Nitrogen oxides (NO_x)	0	0	0	0	0
Carbon monoxide (CO)	0	0	0	0	0
Organic compounds (OC)	0	0	0	0	0
Volatile organic compounds (VOC)	0	0	0	0	0
Total HAPs	0	0	0	0	0
Highest single HAP:	0	0	0	0	0
Air Toxics (see instructions):	0	0	0	0	0

Provide your calculations as an attachment and explain how all process variables and emission factors were selected. Note the emissions factor(s) employed and document the origin. Example: AP-42, Table 4.4-3 (8/97); stack test, Method 5, 4/96; mass balance based on MSDS; etc.

Section II - Specific Air Contaminant Source Information

5. **Does this air contaminant source employ emissions control equipment?**

☒ **Yes** - fill out the applicable information below.

☐ **No** - proceed to item # 6.

Note: Pollutant abbreviations used below: Particulates = PE; Organic compounds = OC; Sulfur dioxide = SO_2; Nitrogen oxides = NOx; Carbon monoxide = CO

☐ **Cyclone/Multiclone**
Manufacturer: _____ Year installed: _____
What do you call this control equipment: _____
Pollutant(s) controlled: ☐ PE ☐ OC ☐ SO_2 ☐ NOx ☐ CO ☐ Other _____
Estimated capture efficiency (%): _____ Basis for efficiency: _____
Design control efficiency (%): _____ Basis for efficiency: _____
Type: ☐ Cyclone ☐ Multiclone ☐ Rotoclone ☐ Other _____
☐ This is the only control equipment on this air contaminant source
If no, this control equipment is: ☐ Primary ☐ Secondary ☐ Parallel
List any other air contaminant sources that are also vented to this control equipment:
_____

☒ **Fabric Filter/Baghouse**
Manufacturer: TO BE DETERMINED Year installed: NEW FACILITY
What do you call this control equipment: FILLING VESSEL FILTER 8
Pollutant(s) controlled: ☒ PE ☐ OC ☐ SO_2 ☐ NOx ☐ CO ☐ Other _____
Estimated capture efficiency (%):100 Basis for efficiency: ENGINEERING DESIGN
Design control efficiency (%):99.9 Basis for efficiency: LITERATURE
Operating pressure drop range (inches of water): Minimum: 3 Maximum: 6
Pressure type: ☐ Negative pressure ☒ Positive pressure
Fabric cleaning mechanism: ☐ Reverse air ☒ Pulse jet ☐ Shaker ☐ Other _____
☐ Lime injection or fabric coating agent used: Type: _____ Feed rate: _____
☒ This is the only control equipment on this air contaminant source
If no, this control equipment is: ☐ Primary ☐ Secondary ☐ Parallel
List any other air contaminant sources that are also vented to this control equipment:
_____

☐ **Wet Scrubber**
Manufacturer: _____ Year installed: _____
What do you call this control equipment: _____
Pollutant(s) controlled: ☐ PE ☐ OC ☐ SO_2 ☐ NOx ☐ CO ☐ Other _____
Estimated capture efficiency (%): _____ Basis for efficiency: _____
Design control efficiency (%): _____ Basis for efficiency: _____
Type: ☐ Spray chamber ☐ Packed bed ☐ Impingement ☐ Venturi ☐ Other _____
Operating pressure drop range (inches of water): Minimum: _____ Maximum: _____
pH range for scrubbing liquid: Minimum: _____ Maximum: _____
Scrubbing liquid flow rate (gal/min): _____
Is scrubber liquid recirculated? ☐ Yes ☐ No
Water supply pressure (psig): _____ NOTE: This item for spray chambers only.
☐ This is the only control equipment on this air contaminant source
If no, this control equipment is: ☐ Primary ☐ Secondary ☐ Parallel
List any other air contaminant sources that are also vented to this control equipment:
_____

☐ **Electrostatic Precipitator**
Manufacturer: _____ Year installed: _____
What do you call this control equipment: _____
Pollutant(s) controlled: ☐ PE ☐ OC ☐ SO_2 ☐ NOx ☐ CO ☐ Other _____
Estimated capture efficiency (%): _____ Basis for efficiency: _____
Design control efficiency (%): _____ Basis for efficiency: _____

Section II - Specific Air Contaminant Source Information

Type: ☐ Plate-wire ☐ Flat-plate ☐ Tubular ☐ Wet ☐ Other _____
Number of operating fields: _____

☐ This is the only control equipment on this air contaminant source
If no, this control equipment is: ☐ Primary ☐ Secondary ☐ Parallel
List any other air contaminant sources that are also vented to this control equipment:
_____

☐ **Concentrator**
Manufacturer: _____ Year installed: _____
What do you call this control equipment: _____
Pollutant(s) controlled: ☐ PE ☐ OC ☐ SO_2 ☐ NOx ☐ CO ☐ Other _____
Estimated capture efficiency (%):_____ Basis for efficiency: _____
Design regeneration cycle time (minutes): _____
Minimum desorption air stream temperature (°F): _____
Rotational rate (revolutions/hour): _____
☐ This is the only control equipment on this air contaminant source
If no, this control equipment is: ☐ Primary ☐ Secondary ☐ Parallel
List any other air contaminant sources that are also vented to this control equipment:
_____

☐ **Catalytic Incinerator**
Manufacturer: _____ Year installed: _____
What do you call this control equipment: _____
Pollutant(s) controlled: ☐ PE ☐ OC ☐ SO_2 ☐ NOx ☐ CO ☐ Other _____
Estimated capture efficiency (%):_____ Basis for efficiency: _____
Design control efficiency (%):_____ Basis for efficiency: _____
Minimum inlet gas temperature (°F): _____
Combustion chamber residence time (seconds): _____
Minimum temperature difference (°F) across catalyst during air contaminant source operation: _____
☐ This is the only control equipment on this air contaminant source
If no, this control equipment is: ☐ Primary ☐ Secondary ☐ Parallel
List any other air contaminant sources that are also vented to this control equipment:
_____

☐ **Thermal Incinerator/Thermal Oxidizer**
Manufacturer: _____ Year installed: _____
What do you call this control equipment: _____
Pollutant(s) controlled: ☐ PE ☐ OC ☐ SO_2 ☐ NOx ☐ CO ☐ Other _____
Estimated capture efficiency (%):_____ Basis for efficiency: _____
Design control efficiency (%):_____ Basis for efficiency: _____
Minimum operating temperature (°F) and location: _____ (See line by line instructions.)
Combustion chamber residence time (seconds): _____
☐ This is the only control equipment on this air contaminant source
If no, this control equipment is: ☐ Primary ☐ Secondary ☐ Parallel
List any other air contaminant sources that are also vented to this control equipment:
_____

☐ **Flare**
Manufacturer: _____ Year installed: _____
What do you call this control equipment: _____
Pollutant(s) controlled: ☐ PE ☐ OC ☐ SO_2 ☐ NOx ☐ CO ☐ Other _____
Estimated capture efficiency (%):_____ Basis for efficiency: _____
Design control efficiency (%):_____ Basis for efficiency: _____
Type: ☐ Enclosed ☐ Elevated (open)
Ignition device: ☐ Electric arc ☐ Pilot flame
Flame presence sensor: ☐ Yes ☐ No
☐ This is the only control equipment on this air contaminant source
If no, this control equipment is: ☐ Primary ☐ Secondary ☐ Parallel
List any other air contaminant sources that are also vented to this control equipment:

Section II - Specific Air Contaminant Source Information

☐ **Condenser**
Manufacturer: _____ Year installed: _____
What do you call this control equipment: _____
Pollutant(s) controlled: ☐ PE ☐ OC ☐ SO_2 ☐ NOx ☐ CO ☐ Other _____
Estimated capture efficiency (%):_____ Basis for efficiency: _____
Design control efficiency (%):_____ Basis for efficiency: _____

Type: ☐ Indirect contact ☐ Direct contact
Maximum exhaust gas temperature (°F) during air contaminant source operation: _____
Coolant type: _____
Design coolant temperature (°F): Minimum _____ Maximum _____
Design coolant flow rate (gpm): _____
☐ This is the only control equipment on this air contaminant source
If no, this control equipment is: ☐ Primary ☐ Secondary ☐ Parallel
List any other air contaminant sources that are also vented to this control equipment:
_____

☐ **Carbon Absorber**
Manufacturer: _____ Year installed: _____
What do you call this control equipment: _____
Pollutant(s) controlled: ☐ PE ☐ OC ☐ SO_2 ☐ NOx ☐ CO ☐ Other _____
Estimated capture efficiency (%):_____ Basis for efficiency: _____
Design control efficiency (%):_____ Basis for efficiency: _____
Type: ☐ On-site regenerative ☐ Disposable
Maximum design outlet organic compound concentration (ppmv): _____
Carbon replacement frequency or regeneration cycle time (specify units): _____
Maximum temperature of the carbon bed, after regeneration (including any cooling cycle): _____
☐ This is the only control equipment on this air contaminant source
If no, this control equipment is: ☐ Primary ☐ Secondary ☐ Parallel
List any other air contaminant sources that are also vented to this control equipment:
_____

☐ **Dry Scrubber**
Manufacturer: _____ Year installed: _____
What do you call this control equipment: _____
Pollutant(s) controlled: ☐ PE ☐ OC ☐ SO_2 ☐ NOx ☐ CO ☐ Other _____
Estimated capture efficiency (%):_____ Basis for efficiency: _____
Design control efficiency (%):_____ Basis for efficiency: _____
Reagent(s) used: Type: _____ Injection rate(s): _____
Operating pressure drop range (inches of water): Minimum: _____ Maximum: _____
☐ This is the only control equipment on this air contaminant source
If no, this control equipment is: ☐ Primary ☐ Secondary ☐ Parallel
List any other air contaminant sources that are also vented to this control equipment:
_____

☐ **Paint booth filter**
Type: ☐ Paper ☐ Fiberglass ☐ Water curtain ☐ Other _____
Design control efficiency (%):_____ Basis for efficiency: _____

☐ **Other**, describe _____
Manufacturer: _____ Year installed: _____
What do you call this control equipment: _____
Pollutant(s) controlled: ☐ PE ☐ OC ☐ SO_2 ☐ NOx ☐ CO ☐ Other
Estimated capture efficiency (%): _____ Basis for efficiency: _____

Design control efficiency (%):_____ Basis for efficiency: _____
☐ This is the only control equipment on this air contaminant source
If no, this control equipment is: ☐ Primary ☐ Secondary ☐ Parallel

Section II - Specific Air Contaminant Source Information

List any other air contaminant sources that are also vented to this control equipment:

6. Attach a Process or Activity Flow Diagram to this application for each air contaminant source included in the application. The diagram should indicate their relationships to one another. See the line by line PTI instructions for additional information.

7. Emissions egress point(s) information: PTIs which allow total emissions in excess of the thresholds listed below will be subject to an air quality modeling analysis. This analysis is to assure that the impact from the requested project will not exceed Ohio=s Acceptable Incremental Impacts for criteria pollutants and/or Maximum Allowable Ground Level Concentrations (MAGLC) for air toxics. Permit requests that would have unacceptable impacts can not be approved as proposed. See the line by line PTI instructions for additional information.

Complete the tables below if the requested allowable annual emission rate for this PTI exceeds any of the following:

- Particulate Matter (PM10): 10 tons per year
- Sulfur Dioxide (SO2): 25 tons per year
- Nitrogen Oxides (NOx): 25 tons per year
- Carbon Monoxide (CO): 100 tons per year
- Air Toxic: 1 ton per year. An air toxic is any air pollutant for which the American Council of Governmental Industrial Hygienists (ACGIH) has established a Threshold Limit Value (TLV).

Complete Table 7-A below for each stack emissions egress point. An egress point is a point at which emissions from an air contaminant source are released into the ambient (outside) air. List each individual egress point on a separate line.

Table 7-A, Stack Egress Point Information

Company Name or ID for the Egress Point (examples: Stack A; Boiler Stack; etc.)	Type Code *	Stack Egress Point Shape and Dimensions (in)(examples: round 10 inch ID; rectangular 14 X 16 inches; etc.)	Stack Egress Point Height from the Ground (ft)	Stack Temp. at Max. Capacity (F)	Stack Flow Rate at Max. Capacity (ACFM)	Minimum Distance to the Property Line (ft)
FILLING VESSEL VENT 8	A	Rectangular: 2 FT X 4 FT	250	200	2,375	1,000

*Type codes for stack egress points:

A. vertical stack (unobstructed): There are no obstructions to upward flow in or on the stack such as a rain cap.
B. vertical stack (obstructed): There are obstructions to the upward flow, such as a rain cap, which prevents or inhibits the air flow in a vertical direction.
C. non-vertical stack: The stack directs the air flow in a direction which is not directly upward.

Complete Table 7-B below for each fugitive emissions egress point. List each individual egress point on a separate line. Refer to the description of the fugitive egress point type codes below the table for use in completing the type code column of the table. For air contaminant sources like roadways and storage piles, only the first 5 columns need to be completed. For an air contaminant source with multiple fugitive emissions egress points, include only the primary egress points.

Table 7-B, Fugitive Egress Point Information

Company ID for the Egress Point (examples; Garage Door B, Building C; Roof Monitor; etc.)	Type Code*	Egress Point Description (examples: garage door, 12 X 30 feet, west wall; outside gravel storage piles; etc.)	Fugitive Egress Point Height from the Ground (ft)	Minimum Distance to the Property Line (ft)	Exit Gas Temp. (F)

*Type codes for fugitive egress point:

Section II - Specific Air Contaminant Source Information

D. door or window
E. other opening in the building without a duct
F. no stack and no building enclosing the air contaminant source (e.g., roadways)

Complete Table 7-C below for each Stack Egress Point identified in Table 7-A above. In each case, use the dimensions of the largest nearby building, building segment or structure. List each individual egress point on a separate line. Use the same Company Name or ID for the Egress Point in Table 7-C that was used in Table 7-A. See the line by line PTI instructions for additional information.

Table 7-C, Egress Point Additional Information (Add rows as necessary)

Company ID or Name for the Egress Point	Building Height (ft)	Building Width (ft)	Building Length (ft)
FILLING VESSEL VENT 8	200	70	250

8. Request for Federally Enforceable Limits

As part of this permit application, do you wish to propose voluntary restrictions to limit emissions in order to avoid specific requirements listed below, (i.e., are you requesting federally enforceable limits to obtain synthetic minor status)?

☐ yes
☒ no
☐ not sure - please contact me if this affects me

If yes, why are you requesting federally enforceable limits? Check all that apply.

a. ☐ to avoid being a major source (see OAC rule 3745-77-01)
b. ☐ to avoid being a major MACT source (see OAC rule 3745-31-01)
c. ☐ to avoid being a major modification (see OAC rule 3745-31-01)
d. ☐ to avoid being a major stationary source (see OAC rule 3745-31-01)
e. ☐ to avoid an air dispersion modeling requirement (see Engineering Guide # 69)
f. ☐ to avoid another requirement. Describe: _____

If you checked a., b. or d., please attach a facility-wide potential to emit (PTE) analysis (for each pollutant) and synthetic minor strategy to this application. (See line by line instructions for definition of PTE.) If you checked c., please attach a net emission change analysis to this application.

9. If this air contaminant source utilizes any continuous emissions monitoring equipment for indicating or demonstrating compliance, complete the following table. This does not include continuous parametric monitoring systems.

Company ID for Egress Point	Type of Monitor	Applicable performance specification (40 CFR 60, Appendix B)	Pollutant(s) Monitored

10. Do you wish to permit this air contaminant source as a portable source, allowing relocation within the state in accordance with OAC rule 3745-31-03 or OAC rule 3745-31-05?

☐ yes - Note: notification requirements in rules cited above must be followed.
☒ no

Section II - Specific Air Contaminant Source Information

11. The appropriate Emissions Activity Category (EAC) form(s) must be completed and attached for each air contaminant source. At least one complete EAC form must be submitted for each air contaminant source for the application to be considered complete. Refer to the list attached to the PTI instructions.

Section II - Specific Air Contaminant Source Information

NOTE: One copy of this section should be filled out for each air contaminant source covered by this PTI application. See the line by line PTI instructions for additional information.

1. Company identification (name for air contaminant source for which you are applying): FILLING VESSEL VENT 9

2. List all equipment that are part of this air contaminant source: FILLING VESSEL VENT 9

3. Air Contaminant Source Installation or Modification Schedule (must be completed regardless of date of installation or modification):

   When did/will you begin to install or modify the air contaminant source? (month/year) SECOND QUARTER 2008

   When did/will you begin to operate the air contaminant source? (month/year) THIRD QUARTER 2011 **OR** after issuance of PTI _____

4. Emissions Information: The following table requests information needed to determine the applicable requirements and the compliance status of this air contaminant source with those requirements. Suggestions for how to estimate emissions may be found in the instructions to the Emissions Activity Category (EAC) forms required with this application. If you need further assistance, contact your Ohio EPA permit representative.

   - If total potential emissions of HAPs or any Air Toxic is greater than 1 ton/yr, fill in the table for that (those) pollutant(s). For all other pollutants, if "Emissions before controls (max), lb/hr" multiplied by 24 hours/day is greater than 10 lb/day, fill in the table for that pollutant.
   - If you have no add-on control equipment, "Emissions before controls= will be the same as "Actual emissions"
   - Annual emissions should be based on operating 8760 hr/yr unless you are requesting operating restrictions to limit emissions in line # 8 or have described inherent limitations below.
   - If you use units other than lb/hr or ton/yr, specify the units used (e.g., gr/dscf, lb/ton charged, lb/MMBtu, ton/12-months).
   - Requested Allowable (ton/yr) is often equivalent to Potential to Emit (PTE) as defined in OAC rule 3745-31-01 and OAC rule 3745-77-01.

Pollutant	Emissions before controls (max) (lb/hr)	Actual emissions (lb/hr)	Actual emissions (ton/year)	Requested Allowable (lb/hr)	Requested Allowable (ton/year)
Particulate emissions (PE) (formerly particulate matter, PM)	41.66	0.08	0.35	0.08	0.35
PM_{10} (PM < 10 microns in diameter)	41.66	0.08	0.35	0.08	0.35
Sulfur dioxide (SO_2)	0	0	0	0	0
Nitrogen oxides (NO_x)	0	0	0	0	0
Carbon monoxide (CO)	0	0	0	0	0
Organic compounds (OC)	0	0	0	0	0
Volatile organic compounds (VOC)	0	0	0	0	0
Total HAPs	0	0	0	0	0
Highest single HAP:	0	0	0	0	0
Air Toxics (see instructions):	0	0	0	0	0

Provide your calculations as an attachment and explain how all process variables and emission factors were selected. Note the emissions factor(s) employed and document the origin. Example: AP-42, Table 4.4-3 (8/97); stack test, Method 5, 4/96; mass balance based on MSDS; etc.

Section II - Specific Air Contaminant Source Information

5. **Does this air contaminant source employ emissions control equipment?**

☒ **Yes** - fill out the applicable information below.

☐ **No** - proceed to item # 6.

Note: Pollutant abbreviations used below: Particulates = PE; Organic compounds = OC; Sulfur dioxide = SO_2; Nitrogen oxides = NOx; Carbon monoxide = CO

☐ **Cyclone/Multiclone**
Manufacturer: _____ Year installed: _____
What do you call this control equipment: _____
Pollutant(s) controlled: ☐ PE ☐ OC ☐ SO_2 ☐ NOx ☐ CO ☐ Other _____
Estimated capture efficiency (%): _____ Basis for efficiency: _____
Design control efficiency (%): _____ Basis for efficiency: _____
Type: ☐ Cyclone ☐ Multiclone ☐ Rotoclone ☐ Other _____
☐ This is the only control equipment on this air contaminant source
If no, this control equipment is: ☐ Primary ☐ Secondary ☐ Parallel
List any other air contaminant sources that are also vented to this control equipment:
_____

☒ **Fabric Filter/Baghouse**
Manufacturer: TO BE DETERMINED Year installed: NEW FACILITY
What do you call this control equipment: FILLING VESSEL FILTER 9
Pollutant(s) controlled: ☒ PE ☐ OC ☐ SO_2 ☐ NOx ☐ CO ☐ Other _____
Estimated capture efficiency (%):100 Basis for efficiency: ENGINEERING DESIGN
Design control efficiency (%):99.9 Basis for efficiency: LITERATURE
Operating pressure drop range (inches of water): Minimum: 3 Maximum: 6
Pressure type: ☐ Negative pressure ☒ Positive pressure
Fabric cleaning mechanism: ☐ Reverse air ☒ Pulse jet ☐ Shaker ☐ Other _____
☐ Lime injection or fabric coating agent used: Type: _____ Feed rate: _____
☒ This is the only control equipment on this air contaminant source
If no, this control equipment is: ☐ Primary ☐ Secondary ☐ Parallel
List any other air contaminant sources that are also vented to this control equipment:
_____

☐ **Wet Scrubber**
Manufacturer: _____ Year installed: _____
What do you call this control equipment: _____
Pollutant(s) controlled: ☐ PE ☐ OC ☐ SO_2 ☐ NOx ☐ CO ☐ Other _____
Estimated capture efficiency (%): _____ Basis for efficiency: _____
Design control efficiency (%): _____ Basis for efficiency: _____
Type: ☐ Spray chamber ☐ Packed bed ☐ Impingement ☐ Venturi ☐ Other _____
Operating pressure drop range (inches of water): Minimum: _____ Maximum: _____
pH range for scrubbing liquid: Minimum: _____ Maximum: _____
Scrubbing liquid flow rate (gal/min): _____
Is scrubber liquid recirculated? ☐ Yes ☐ No
Water supply pressure (psig): _____ NOTE: This item for spray chambers only.
☐ This is the only control equipment on this air contaminant source
If no, this control equipment is: ☐ Primary ☐ Secondary ☐ Parallel
List any other air contaminant sources that are also vented to this control equipment:
_____

☐ **Electrostatic Precipitator**
Manufacturer: _____ Year installed: _____
What do you call this control equipment: _____
Pollutant(s) controlled: ☐ PE ☐ OC ☐ SO_2 ☐ NOx ☐ CO ☐ Other _____
Estimated capture efficiency (%): _____ Basis for efficiency: _____
Design control efficiency (%): _____ Basis for efficiency: _____

Section II - Specific Air Contaminant Source Information

Type: ☐ Plate-wire ☐ Flat-plate ☐ Tubular ☐ Wet ☐ Other _____
Number of operating fields: _____

☐ This is the only control equipment on this air contaminant source
If no, this control equipment is: ☐ Primary ☐ Secondary ☐ Parallel
List any other air contaminant sources that are also vented to this control equipment:
_____

☐ **Concentrator**
Manufacturer: _____ Year installed: _____
What do you call this control equipment: _____
Pollutant(s) controlled: ☐ PE ☐ OC ☐ SO_2 ☐ NOx ☐ CO ☐ Other _____
Estimated capture efficiency (%):_____ Basis for efficiency: _____
Design regeneration cycle time (minutes): _____
Minimum desorption air stream temperature (°F): _____
Rotational rate (revolutions/hour): _____
☐ This is the only control equipment on this air contaminant source
If no, this control equipment is: ☐ Primary ☐ Secondary ☐ Parallel
List any other air contaminant sources that are also vented to this control equipment:
_____

☐ **Catalytic Incinerator**
Manufacturer: _____ Year installed: _____
What do you call this control equipment: _____
Pollutant(s) controlled: ☐ PE ☐ OC ☐ SO_2 ☐ NOx ☐ CO ☐ Other _____
Estimated capture efficiency (%):_____ Basis for efficiency: _____
Design control efficiency (%):_____ Basis for efficiency: _____
Minimum inlet gas temperature (°F): _____
Combustion chamber residence time (seconds): _____
Minimum temperature difference (°F) across catalyst during air contaminant source operation: _____
☐ This is the only control equipment on this air contaminant source
If no, this control equipment is: ☐ Primary ☐ Secondary ☐ Parallel
List any other air contaminant sources that are also vented to this control equipment:
_____

☐ **Thermal Incinerator/Thermal Oxidizer**
Manufacturer: _____ Year installed: _____
What do you call this control equipment: _____
Pollutant(s) controlled: ☐ PE ☐ OC ☐ SO_2 ☐ NOx ☐ CO ☐ Other _____
Estimated capture efficiency (%):_____ Basis for efficiency: _____
Design control efficiency (%):_____ Basis for efficiency: _____
Minimum operating temperature (°F) and location: _____ (See line by line instructions.)
Combustion chamber residence time (seconds): _____
☐ This is the only control equipment on this air contaminant source
If no, this control equipment is: ☐ Primary ☐ Secondary ☐ Parallel
List any other air contaminant sources that are also vented to this control equipment:
_____

☐ **Flare**
Manufacturer: _____ Year installed: _____
What do you call this control equipment: _____
Pollutant(s) controlled: ☐ PE ☐ OC ☐ SO_2 ☐ NOx ☐ CO ☐ Other _____
Estimated capture efficiency (%):_____ Basis for efficiency: _____
Design control efficiency (%):_____ Basis for efficiency: _____
Type: ☐ Enclosed ☐ Elevated (open)
Ignition device: ☐ Electric arc ☐ Pilot flame
Flame presence sensor: ☐ Yes ☐ No
☐ This is the only control equipment on this air contaminant source
If no, this control equipment is: ☐ Primary ☐ Secondary ☐ Parallel
List any other air contaminant sources that are also vented to this control equipment:

Section II - Specific Air Contaminant Source Information

☐ **Condenser**

Manufacturer: _____ Year installed: _____
What do you call this control equipment: _____
Pollutant(s) controlled: ☐ PE ☐ OC ☐ SO_2 ☐ NOx ☐ CO ☐ Other _____
Estimated capture efficiency (%):_____ Basis for efficiency: _____
Design control efficiency (%):_____ Basis for efficiency: _____

Type: ☐ Indirect contact ☐ Direct contact
Maximum exhaust gas temperature (°F) during air contaminant source operation: _____
Coolant type: _____
Design coolant temperature (°F): Minimum _____ Maximum _____
Design coolant flow rate (gpm): _____
☐ This is the only control equipment on this air contaminant source
If no, this control equipment is: ☐ Primary ☐ Secondary ☐ Parallel
List any other air contaminant sources that are also vented to this control equipment:
_____

☐ **Carbon Absorber**

Manufacturer: _____ Year installed: _____
What do you call this control equipment: _____
Pollutant(s) controlled: ☐ PE ☐ OC ☐ SO_2 ☐ NOx ☐ CO ☐ Other _____
Estimated capture efficiency (%):_____ Basis for efficiency: _____
Design control efficiency (%):_____ Basis for efficiency: _____
Type: ☐ On-site regenerative ☐ Disposable
Maximum design outlet organic compound concentration (ppmv): _____
Carbon replacement frequency or regeneration cycle time (specify units): _____
Maximum temperature of the carbon bed, after regeneration (including any cooling cycle): _____
☐ This is the only control equipment on this air contaminant source
If no, this control equipment is: ☐ Primary ☐ Secondary ☐ Parallel
List any other air contaminant sources that are also vented to this control equipment:
_____

☐ **Dry Scrubber**

Manufacturer: _____ Year installed: _____
What do you call this control equipment: _____
Pollutant(s) controlled: ☐ PE ☐ OC ☐ SO_2 ☐ NOx ☐ CO ☐ Other _____
Estimated capture efficiency (%):_____ Basis for efficiency: _____
Design control efficiency (%):_____ Basis for efficiency: _____
Reagent(s) used: Type: _____ Injection rate(s): _____
Operating pressure drop range (inches of water): Minimum: _____ Maximum: _____
☐ This is the only control equipment on this air contaminant source
If no, this control equipment is: ☐ Primary ☐ Secondary ☐ Parallel
List any other air contaminant sources that are also vented to this control equipment:
_____

☐ **Paint booth filter**

Type: ☐ Paper ☐ Fiberglass ☐ Water curtain ☐ Other _____
Design control efficiency (%):_____ Basis for efficiency: _____

☐ **Other**, describe _____

Manufacturer: _____ Year installed: _____
What do you call this control equipment: _____
Pollutant(s) controlled: ☐ PE ☐ OC ☐ SO_2 ☐ NOx ☐ CO ☐ Other
Estimated capture efficiency (%): _____ Basis for efficiency: _____

Design control efficiency (%):_____ Basis for efficiency: _____
☐ This is the only control equipment on this air contaminant source
If no, this control equipment is: ☐ Primary ☐ Secondary ☐ Parallel

Section II - Specific Air Contaminant Source Information

List any other air contaminant sources that are also vented to this control equipment:

_____

6. Attach a Process or Activity Flow Diagram to this application for each air contaminant source included in the application. The diagram should indicate their relationships to one another. See the line by line PTI instructions for additional information.

7. Emissions egress point(s) information: PTIs which allow total emissions in excess of the thresholds listed below will be subject to an air quality modeling analysis. This analysis is to assure that the impact from the requested project will not exceed Ohio=s Acceptable Incremental Impacts for criteria pollutants and/or Maximum Allowable Ground Level Concentrations (MAGLC) for air toxics. Permit requests that would have unacceptable impacts can not be approved as proposed. See the line by line PTI instructions for additional information.

   Complete the tables below if the requested allowable annual emission rate for this PTI exceeds any of the following:

   - Particulate Matter (PM10): 10 tons per year
   - Sulfur Dioxide (SO2): 25 tons per year
   - Nitrogen Oxides (NOx): 25 tons per year
   - Carbon Monoxide (CO): 100 tons per year
   - Air Toxic: 1 ton per year. An air toxic is any air pollutant for which the American Council of Governmental Industrial Hygienists (ACGIH) has established a Threshold Limit Value (TLV).

   Complete Table 7-A below for each stack emissions egress point. An egress point is a point at which emissions from an air contaminant source are released into the ambient (outside) air. List each individual egress point on a separate line.

Table 7-A, Stack Egress Point Information

Company Name or ID for the Egress Point (examples: Stack A; Boiler Stack; etc.)	Type Code *	Stack Egress Point Shape and Dimensions (in)(examples: round 10 inch ID; rectangular 14 X 16 inches; etc.)	Stack Egress Point Height from the Ground (ft)	Stack Temp. at Max. Capacity (F)	Stack Flow Rate at Max. Capacity (ACFM)	Minimum Distance to the Property Line (ft)
FILLING VESSEL VENT 9	A	Rectangular: 2 FT X 4 FT	250	200	2,375	1,000

*Type codes for stack egress points:

A. vertical stack (unobstructed): There are no obstructions to upward flow in or on the stack such as a rain cap.
B. vertical stack (obstructed): There are obstructions to the upward flow, such as a rain cap, which prevents or inhibits the air flow in a vertical direction.
C. non-vertical stack: The stack directs the air flow in a direction which is not directly upward.

Complete Table 7-B below for each fugitive emissions egress point. List each individual egress point on a separate line. Refer to the description of the fugitive egress point type codes below the table for use in completing the type code column of the table. For air contaminant sources like roadways and storage piles, only the first 5 columns need to be completed. For an air contaminant source with multiple fugitive emissions egress points, include only the primary egress points.

Table 7-B, Fugitive Egress Point Information

Company ID for the Egress Point (examples; Garage Door B, Building C; Roof Monitor; etc.)	Type Code*	Egress Point Description (examples: garage door, 12 X 30 feet, west wall; outside gravel storage piles; etc.)	Fugitive Egress Point Height from the Ground (ft)	Minimum Distance to the Property Line (ft)	Exit Gas Temp. (F)

*Type codes for fugitive egress point:

Section II - Specific Air Contaminant Source Information

D. door or window
E. other opening in the building without a duct
F. no stack and no building enclosing the air contaminant source (e.g., roadways)

Complete Table 7-C below for each Stack Egress Point identified in Table 7-A above. In each case, use the dimensions of the largest nearby building, building segment or structure. List each individual egress point on a separate line. Use the same Company Name or ID for the Egress Point in Table 7-C that was used in Table 7-A. See the line by line PTI instructions for additional information.

Table 7-C, Egress Point Additional Information (Add rows as necessary)

Company ID or Name for the Egress Point	Building Height (ft)	Building Width (ft)	Building Length (ft)
FILLING VESSEL VENT 9	200	70	250

8. Request for Federally Enforceable Limits

As part of this permit application, do you wish to propose voluntary restrictions to limit emissions in order to avoid specific requirements listed below, (i.e., are you requesting federally enforceable limits to obtain synthetic minor status)?

☐ yes
☒ no
☐ not sure - please contact me if this affects me

If yes, why are you requesting federally enforceable limits? Check all that apply.

a. ☐ to avoid being a major source (see OAC rule 3745-77-01)
b. ☐ to avoid being a major MACT source (see OAC rule 3745-31-01)
c. ☐ to avoid being a major modification (see OAC rule 3745-31-01)
d. ☐ to avoid being a major stationary source (see OAC rule 3745-31-01)
e. ☐ to avoid an air dispersion modeling requirement (see Engineering Guide # 69)
f. ☐ to avoid another requirement. Describe: _____

If you checked a., b. or d., please attach a facility-wide potential to emit (PTE) analysis (for each pollutant) and synthetic minor strategy to this application. (See line by line instructions for definition of PTE.) If you checked c., please attach a net emission change analysis to this application.

9. If this air contaminant source utilizes any continuous emissions monitoring equipment for indicating or demonstrating compliance, complete the following table. This does not include continuous parametric monitoring systems.

Company ID for Egress Point	Type of Monitor	Applicable performance specification (40 CFR 60, Appendix B)	Pollutant(s) Monitored

10. Do you wish to permit this air contaminant source as a portable source, allowing relocation within the state in accordance with OAC rule 3745-31-03 or OAC rule 3745-31-05?

☐ yes - Note: notification requirements in rules cited above must be followed.
☒ no

Section II - Specific Air Contaminant Source Information

11. The appropriate Emissions Activity Category (EAC) form(s) must be completed and attached for each air contaminant source. At least one complete EAC form must be submitted for each air contaminant source for the application to be considered complete. Refer to the list attached to the PTI instructions.

Section II - Specific Air Contaminant Source Information

NOTE: One copy of this section should be filled out for each air contaminant source covered by this PTI application. See the line by line PTI instructions for additional information.

1. Company identification (name for air contaminant source for which you are applying): FILLING VESSEL VENT 10

2. List all equipment that are part of this air contaminant source: FILLING VESSEL VENT 10

3. Air Contaminant Source Installation or Modification Schedule (must be completed regardless of date of installation or modification):

   When did/will you begin to install or modify the air contaminant source? (month/year) SECOND QUARTER 2008

   When did/will you begin to operate the air contaminant source? (month/year) THIRD QUARTER 2011 **OR** after issuance of PTI _____

4. Emissions Information: The following table requests information needed to determine the applicable requirements and the compliance status of this air contaminant source with those requirements. Suggestions for how to estimate emissions may be found in the instructions to the Emissions Activity Category (EAC) forms required with this application. If you need further assistance, contact your Ohio EPA permit representative.

   - If total potential emissions of HAPs or any Air Toxic is greater than 1 ton/yr, fill in the table for that (those) pollutant(s). For all other pollutants, if "Emissions before controls (max), lb/hr" multiplied by 24 hours/day is greater than 10 lb/day, fill in the table for that pollutant.
   - If you have no add-on control equipment, "Emissions before controls= will be the same as "Actual emissions"
   - Annual emissions should be based on operating 8760 hr/yr unless you are requesting operating restrictions to limit emissions in line # 8 or have described inherent limitations below.
   - If you use units other than lb/hr or ton/yr, specify the units used (e.g., gr/dscf, lb/ton charged, lb/MMBtu, ton/12-months).
   - Requested Allowable (ton/yr) is often equivalent to Potential to Emit (PTE) as defined in OAC rule 3745-31-01 and OAC rule 3745-77-01.

Pollutant	Emissions before controls (max) (lb/hr)	Actual emissions (lb/hr)	Actual emissions (ton/year)	Requested Allowable (lb/hr)	Requested Allowable (ton/year)
Particulate emissions (PE) (formerly particulate matter, PM)	41.66	0.08	0.35	0.08	0.35
PM_{10} (PM < 10 microns in diameter)	41.66	0.08	0.35	0.08	0.35
Sulfur dioxide (SO_2)	0	0	0	0	0
Nitrogen oxides (NO_x)	0	0	0	0	0
Carbon monoxide (CO)	0	0	0	0	0
Organic compounds (OC)	0	0	0	0	0
Volatile organic compounds (VOC)	0	0	0	0	0
Total HAPs	0	0	0	0	0
Highest single HAP:	0	0	0	0	0
Air Toxics (see instructions):	0	0	0	0	0

Provide your calculations as an attachment and explain how all process variables and emission factors were selected. Note the emissions factor(s) employed and document the origin. Example: AP-42, Table 4.4-3 (8/97); stack test, Method 5, 4/96; mass balance based on MSDS; etc.

Section II - Specific Air Contaminant Source Information

5. **Does this air contaminant source employ emissions control equipment?**

☒ **Yes** - fill out the applicable information below.

☐ **No** - proceed to item # 6.

Note: Pollutant abbreviations used below: Particulates = PE; Organic compounds = OC; Sulfur dioxide = SO_2; Nitrogen oxides = NOx; Carbon monoxide = CO

☐ **Cyclone/Multiclone**

Manufacturer: _____ Year installed: _____
What do you call this control equipment: _____
Pollutant(s) controlled: ☐ PE ☐ OC ☐ SO_2 ☐ NOx ☐ CO ☐ Other _____
Estimated capture efficiency (%): _____ Basis for efficiency: _____
Design control efficiency (%): _____ Basis for efficiency: _____
Type: ☐ Cyclone ☐ Multiclone ☐ Rotoclone ☐ Other _____
☐ This is the only control equipment on this air contaminant source
If no, this control equipment is: ☐ Primary ☐ Secondary ☐ Parallel
List any other air contaminant sources that are also vented to this control equipment:
_____

☒ **Fabric Filter/Baghouse**

Manufacturer: TO BE DETERMINED Year installed: NEW FACILITY
What do you call this control equipment: FILLING VESSEL FILTER 10
Pollutant(s) controlled: ☒ PE ☐ OC ☐ SO_2 ☐ NOx ☐ CO ☐ Other _____
Estimated capture efficiency (%):100 Basis for efficiency: ENGINEERING DESIGN
Design control efficiency (%):99.9 Basis for efficiency: LITERATURE
Operating pressure drop range (inches of water): Minimum: 3 Maximum: 6
Pressure type: ☐ Negative pressure ☒ Positive pressure
Fabric cleaning mechanism: ☐ Reverse air ☒ Pulse jet ☐ Shaker ☐ Other _____
☐ Lime injection or fabric coating agent used: Type: _____ Feed rate: _____
☒ This is the only control equipment on this air contaminant source
If no, this control equipment is: ☐ Primary ☐ Secondary ☐ Parallel
List any other air contaminant sources that are also vented to this control equipment:
_____

☐ **Wet Scrubber**

Manufacturer: _____ Year installed: _____
What do you call this control equipment: _____
Pollutant(s) controlled: ☐ PE ☐ OC ☐ SO_2 ☐ NOx ☐ CO ☐ Other _____
Estimated capture efficiency (%): _____ Basis for efficiency: _____
Design control efficiency (%): _____ Basis for efficiency: _____
Type: ☐ Spray chamber ☐ Packed bed ☐ Impingement ☐ Venturi ☐ Other _____
Operating pressure drop range (inches of water): Minimum: _____ Maximum: _____
pH range for scrubbing liquid: Minimum: _____ Maximum: _____
Scrubbing liquid flow rate (gal/min): _____
Is scrubber liquid recirculated? ☐ Yes ☐ No
Water supply pressure (psig): _____ NOTE: This item for spray chambers only.
☐ This is the only control equipment on this air contaminant source
If no, this control equipment is: ☐ Primary ☐ Secondary ☐ Parallel
List any other air contaminant sources that are also vented to this control equipment:
_____

☐ **Electrostatic Precipitator**

Manufacturer: _____ Year installed: _____
What do you call this control equipment: _____
Pollutant(s) controlled: ☐ PE ☐ OC ☐ SO_2 ☐ NOx ☐ CO ☐ Other _____
Estimated capture efficiency (%): _____ Basis for efficiency: _____
Design control efficiency (%): _____ Basis for efficiency: _____

Section II - Specific Air Contaminant Source Information

Type: ☐ Plate-wire ☐ Flat-plate ☐ Tubular ☐ Wet ☐ Other _____
Number of operating fields: _____

☐ This is the only control equipment on this air contaminant source
If no, this control equipment is: ☐ Primary ☐ Secondary ☐ Parallel
List any other air contaminant sources that are also vented to this control equipment:
_____

☐ **Concentrator**
Manufacturer: _____ Year installed: _____
What do you call this control equipment: _____
Pollutant(s) controlled: ☐ PE ☐ OC ☐ SO_2 ☐ NOx ☐ CO ☐ Other _____
Estimated capture efficiency (%):_____ Basis for efficiency: _____
Design regeneration cycle time (minutes): _____
Minimum desorption air stream temperature (°F): _____
Rotational rate (revolutions/hour): _____
☐ This is the only control equipment on this air contaminant source
If no, this control equipment is: ☐ Primary ☐ Secondary ☐ Parallel
List any other air contaminant sources that are also vented to this control equipment:
_____

☐ **Catalytic Incinerator**
Manufacturer: _____ Year installed: _____
What do you call this control equipment: _____
Pollutant(s) controlled: ☐ PE ☐ OC ☐ SO_2 ☐ NOx ☐ CO ☐ Other _____
Estimated capture efficiency (%):_____ Basis for efficiency: _____
Design control efficiency (%):_____ Basis for efficiency: _____
Minimum inlet gas temperature (°F): _____
Combustion chamber residence time (seconds): _____
Minimum temperature difference (°F) across catalyst during air contaminant source operation: _____
☐ This is the only control equipment on this air contaminant source
If no, this control equipment is: ☐ Primary ☐ Secondary ☐ Parallel
List any other air contaminant sources that are also vented to this control equipment:
_____

☐ **Thermal Incinerator/Thermal Oxidizer**
Manufacturer: _____ Year installed: _____
What do you call this control equipment: _____
Pollutant(s) controlled: ☐ PE ☐ OC ☐ SO_2 ☐ NOx ☐ CO ☐ Other _____
Estimated capture efficiency (%):_____ Basis for efficiency: _____
Design control efficiency (%):_____ Basis for efficiency: _____
Minimum operating temperature (°F) and location: _____ (See line by line instructions.)
Combustion chamber residence time (seconds): _____
☐ This is the only control equipment on this air contaminant source
If no, this control equipment is: ☐ Primary ☐ Secondary ☐ Parallel
List any other air contaminant sources that are also vented to this control equipment:
_____

☐ **Flare**
Manufacturer: _____ Year installed: _____
What do you call this control equipment: _____
Pollutant(s) controlled: ☐ PE ☐ OC ☐ SO_2 ☐ NOx ☐ CO ☐ Other _____
Estimated capture efficiency (%):_____ Basis for efficiency: _____
Design control efficiency (%):_____ Basis for efficiency: _____
Type: ☐ Enclosed ☐ Elevated (open)
Ignition device: ☐ Electric arc ☐ Pilot flame
Flame presence sensor: ☐ Yes ☐ No
☐ This is the only control equipment on this air contaminant source
If no, this control equipment is: ☐ Primary ☐ Secondary ☐ Parallel
List any other air contaminant sources that are also vented to this control equipment:

Section II - Specific Air Contaminant Source Information

☐ **Condenser**
Manufacturer: _____ Year installed: _____
What do you call this control equipment: _____
Pollutant(s) controlled: ☐ PE ☐ OC ☐ SO_2 ☐ NOx ☐ CO ☐ Other _____
Estimated capture efficiency (%):_____ Basis for efficiency: _____
Design control efficiency (%):_____ Basis for efficiency: _____

Type: ☐ Indirect contact ☐ Direct contact
Maximum exhaust gas temperature (°F) during air contaminant source operation: _____
Coolant type: _____
Design coolant temperature (°F): Minimum _____ Maximum _____
Design coolant flow rate (gpm): _____
☐ This is the only control equipment on this air contaminant source
If no, this control equipment is: ☐ Primary ☐ Secondary ☐ Parallel
List any other air contaminant sources that are also vented to this control equipment:
_____

☐ **Carbon Absorber**
Manufacturer: _____ Year installed: _____
What do you call this control equipment: _____
Pollutant(s) controlled: ☐ PE ☐ OC ☐ SO_2 ☐ NOx ☐ CO ☐ Other _____
Estimated capture efficiency (%):_____ Basis for efficiency: _____
Design control efficiency (%):_____ Basis for efficiency: _____
Type: ☐ On-site regenerative ☐ Disposable
Maximum design outlet organic compound concentration (ppmv): _____
Carbon replacement frequency or regeneration cycle time (specify units): _____
Maximum temperature of the carbon bed, after regeneration (including any cooling cycle): _____
☐ This is the only control equipment on this air contaminant source
If no, this control equipment is: ☐ Primary ☐ Secondary ☐ Parallel
List any other air contaminant sources that are also vented to this control equipment:
_____

☐ **Dry Scrubber**
Manufacturer: _____ Year installed: _____
What do you call this control equipment: _____
Pollutant(s) controlled: ☐ PE ☐ OC ☐ SO_2 ☐ NOx ☐ CO ☐ Other _____
Estimated capture efficiency (%):_____ Basis for efficiency: _____
Design control efficiency (%):_____ Basis for efficiency: _____
Reagent(s) used: Type: _____ Injection rate(s): _____
Operating pressure drop range (inches of water): Minimum: _____ Maximum: _____
☐ This is the only control equipment on this air contaminant source
If no, this control equipment is: ☐ Primary ☐ Secondary ☐ Parallel
List any other air contaminant sources that are also vented to this control equipment:
_____

☐ **Paint booth filter**
Type: ☐ Paper ☐ Fiberglass ☐ Water curtain ☐ Other _____
Design control efficiency (%):_____ Basis for efficiency: _____

☐ **Other**, describe _____
Manufacturer: _____ Year installed: _____
What do you call this control equipment: _____
Pollutant(s) controlled: ☐ PE ☐ OC ☐ SO_2 ☐ NOx ☐ CO ☐ Other
Estimated capture efficiency (%): _____ Basis for efficiency: _____

Design control efficiency (%):_____ Basis for efficiency: _____
☐ This is the only control equipment on this air contaminant source
If no, this control equipment is: ☐ Primary ☐ Secondary ☐ Parallel

Section II - Specific Air Contaminant Source Information

List any other air contaminant sources that are also vented to this control equipment:

_____

6. Attach a Process or Activity Flow Diagram to this application for each air contaminant source included in the application. The diagram should indicate their relationships to one another. See the line by line PTI instructions for additional information.

7. Emissions egress point(s) information: PTIs which allow total emissions in excess of the thresholds listed below will be subject to an air quality modeling analysis. This analysis is to assure that the impact from the requested project will not exceed Ohio=s Acceptable Incremental Impacts for criteria pollutants and/or Maximum Allowable Ground Level Concentrations (MAGLC) for air toxics. Permit requests that would have unacceptable impacts can not be approved as proposed. See the line by line PTI instructions for additional information.

   Complete the tables below if the requested allowable annual emission rate for this PTI exceeds any of the following:

   - Particulate Matter (PM10): 10 tons per year
   - Sulfur Dioxide (SO2): 25 tons per year
   - Nitrogen Oxides (NOx): 25 tons per year
   - Carbon Monoxide (CO): 100 tons per year
   - Air Toxic: 1 ton per year. An air toxic is any air pollutant for which the American Council of Governmental Industrial Hygienists (ACGIH) has established a Threshold Limit Value (TLV).

   Complete Table 7-A below for each stack emissions egress point. An egress point is a point at which emissions from an air contaminant source are released into the ambient (outside) air. List each individual egress point on a separate line.

Table 7-A, Stack Egress Point Information

Company Name or ID for the Egress Point (examples: Stack A; Boiler Stack; etc.)	Type Code *	Stack Egress Point Shape and Dimensions (in)(examples: round 10 inch ID; rectangular 14 X 16 inches; etc.)	Stack Egress Point Height from the Ground (ft)	Stack Temp. at Max. Capacity (F)	Stack Flow Rate at Max. Capacity (ACFM)	Minimum Distance to the Property Line (ft)
FILLING VESSEL VENT 10	A	Rectangular: 2 FT X 4 FT	250	200	2,375	1,000

*Type codes for stack egress points:

A. vertical stack (unobstructed): There are no obstructions to upward flow in or on the stack such as a rain cap.
B. vertical stack (obstructed): There are obstructions to the upward flow, such as a rain cap, which prevents or inhibits the air flow in a vertical direction.
C. non-vertical stack: The stack directs the air flow in a direction which is not directly upward.

Complete Table 7-B below for each fugitive emissions egress point. List each individual egress point on a separate line. Refer to the description of the fugitive egress point type codes below the table for use in completing the type code column of the table. For air contaminant sources like roadways and storage piles, only the first 5 columns need to be completed. For an air contaminant source with multiple fugitive emissions egress points, include only the primary egress points.

Table 7-B, Fugitive Egress Point Information

Company ID for the Egress Point (examples; Garage Door B, Building C; Roof Monitor; etc.)	Type Code*	Egress Point Description (examples: garage door, 12 X 30 feet, west wall; outside gravel storage piles; etc.)	Fugitive Egress Point Height from the Ground (ft)	Minimum Distance to the Property Line (ft)	Exit Gas Temp. (F)

*Type codes for fugitive egress point:

Section II - Specific Air Contaminant Source Information

D. door or window
E. other opening in the building without a duct
F. no stack and no building enclosing the air contaminant source (e.g., roadways)

Complete Table 7-C below for each Stack Egress Point identified in Table 7-A above. In each case, use the dimensions of the largest nearby building, building segment or structure. List each individual egress point on a separate line. Use the same Company Name or ID for the Egress Point in Table 7-C that was used in Table 7-A. See the line by line PTI instructions for additional information.

Table 7-C, Egress Point Additional Information (Add rows as necessary)			
Company ID or Name for the Egress Point	**Building Height (ft)**	**Building Width (ft)**	**Building Length (ft)**
FILLING VESSEL VENT 10	200	70	250

8. Request for Federally Enforceable Limits

As part of this permit application, do you wish to propose voluntary restrictions to limit emissions in order to avoid specific requirements listed below, (i.e., are you requesting federally enforceable limits to obtain synthetic minor status)?

☐ yes
☒ no
☐ not sure - please contact me if this affects me

If yes, why are you requesting federally enforceable limits? Check all that apply.

a. ☐ to avoid being a major source (see OAC rule 3745-77-01)
b. ☐ to avoid being a major MACT source (see OAC rule 3745-31-01)
c. ☐ to avoid being a major modification (see OAC rule 3745-31-01)
d. ☐ to avoid being a major stationary source (see OAC rule 3745-31-01)
e. ☐ to avoid an air dispersion modeling requirement (see Engineering Guide # 69)
f. ☐ to avoid another requirement. Describe: _____

If you checked a., b. or d., please attach a facility-wide potential to emit (PTE) analysis (for each pollutant) and synthetic minor strategy to this application. (See line by line instructions for definition of PTE.) If you checked c., please attach a net emission change analysis to this application.

9. If this air contaminant source utilizes any continuous emissions monitoring equipment for indicating or demonstrating compliance, complete the following table. This does not include continuous parametric monitoring systems.

Company ID for Egress Point	**Type of Monitor**	**Applicable performance specification (40 CFR 60, Appendix B)**	**Pollutant(s) Monitored**

10. Do you wish to permit this air contaminant source as a portable source, allowing relocation within the state in accordance with OAC rule 3745-31-03 or OAC rule 3745-31-05?

☐ yes - Note: notification requirements in rules cited above must be followed.
☒ no

Section II - Specific Air Contaminant Source Information

11. The appropriate Emissions Activity Category (EAC) form(s) must be completed and attached for each air contaminant source. At least one complete EAC form must be submitted for each air contaminant source for the application to be considered complete. Refer to the list attached to the PTI instructions.

Section II - Specific Air Contaminant Source Information

NOTE: One copy of this section should be filled out for each air contaminant source covered by this PTI application. See the line by line PTI instructions for additional information.

1. Company identification (name for air contaminant source for which you are applying): HOT GAS GENERATOR 1

2. List all equipment that are part of this air contaminant source: HOT GAS GENERATOR 1

3. Air Contaminant Source Installation or Modification Schedule (must be completed regardless of date of installation or modification):

   When did/will you begin to install or modify the air contaminant source? (month/year) SECOND QUARTER 2008

   When did/will you begin to operate the air contaminant source? (month/year) THIRD QUARTER 2011 **OR** after issuance of PTI _____

4. Emissions Information: The following table requests information needed to determine the applicable requirements and the compliance status of this air contaminant source with those requirements. Suggestions for how to estimate emissions may be found in the instructions to the Emissions Activity Category (EAC) forms required with this application. If you need further assistance, contact your Ohio EPA permit representative.

   - If total potential emissions of HAPs or any Air Toxic is greater than 1 ton/yr, fill in the table for that (those) pollutant(s). For all other pollutants, if "Emissions before controls (max), lb/hr" multiplied by 24 hours/day is greater than 10 lb/day, fill in the table for that pollutant.
   - If you have no add-on control equipment, "Emissions before controls= will be the same as "Actual emissions"
   - Annual emissions should be based on operating 8760 hr/yr unless you are requesting operating restrictions to limit emissions in line # 8 or have described inherent limitations below.
   - If you use units other than lb/hr or ton/yr, specify the units used (e.g., gr/dscf, lb/ton charged, lb/MMBtu, ton/12-months).
   - Requested Allowable (ton/yr) is often equivalent to Potential to Emit (PTE) as defined in OAC rule 3745-31-01 and OAC rule 3745-77-01.

Pollutant	Emissions before controls (max) (lb/hr)	Actual emissions (lb/hr)	Actual emissions (ton/year)	Requested Allowable (lb/hr)	Requested Allowable (ton/year)
Particulate emissions (PE) (formerly particulate matter, PM)	2.3	0.6	2.62	0.6	2.62
PM_{10} (PM < 10 microns in diameter)	2.3	0.6	2.62	0.6	2.62
Sulfur dioxide (SO_2)	0.94	0.24	1.06	0.24	1.06
Nitrogen oxides (NO_x)	10.2	1.32	5.8	1.32	5.8
Carbon monoxide (CO)	8.6	2.23	9.75	2.23	9.75
Organic compounds (OC)	0.56	0.15	0.64	0.15	0.64
Volatile organic compounds (VOC)	0.56	0.15	0.64	0.15	0.64
Total HAPs	0.2	0.05	0.22	0.05	0.22
Highest single HAP: (hexane)	0.18	0.048	0.21	0.048	0.21
Air Toxics (see instructions):	0.2	0.05	0.22	0.05	0.22

Provide your calculations as an attachment and explain how all process variables and emission factors were selected. Note the emissions factor(s) employed and document the origin. Example: AP-42, Table 4.4-3 (8/97); stack test, Method 5, 4/96; mass balance based on MSDS; etc.

Section II - Specific Air Contaminant Source Information

5. **Does this air contaminant source employ emissions control equipment?**

☒ **Yes** - fill out the applicable information below.

☐ **No** - proceed to item # 6.

Note: Pollutant abbreviations used below: Particulates = PE; Organic compounds = OC; Sulfur dioxide = SO_2; Nitrogen oxides = NOx; Carbon monoxide = CO

☐ **Cyclone/Multiclone**
Manufacturer: _____ Year installed: _____
What do you call this control equipment: _____
Pollutant(s) controlled: ☐ PE ☐ OC ☐ SO_2 ☐ NOx ☐ CO ☐ Other _____
Estimated capture efficiency (%): _____ Basis for efficiency: _____
Design control efficiency (%): _____ Basis for efficiency: _____
Type: ☐ Cyclone ☐ Multiclone ☐ Rotoclone ☐ Other _____
☐ This is the only control equipment on this air contaminant source
If no, this control equipment is: ☐ Primary ☐ Secondary ☐ Parallel
List any other air contaminant sources that are also vented to this control equipment:
_____

☒ **Fabric Filter/Baghouse**
Manufacturer: TO BE DETERMINED Year installed: NEW FACILITY
What do you call this control equipment: CMD BAGHOUSE 1
Pollutant(s) controlled: ☒ PE ☐ OC ☐ SO_2 ☐ NOx ☐ CO ☐ Other _____
Estimated capture efficiency (%):100 Basis for efficiency: ENGINEERING DESIGN
Design control efficiency (%):99.9 Basis for efficiency: LITERATURE
Operating pressure drop range (inches of water): Minimum: ____3____ Maximum: ___6___
Pressure type: ☐ Negative pressure ☒ Positive pressure
Fabric cleaning mechanism: ☐ Reverse air ☒ Pulse jet ☐ Shaker ☐ Other _____
☐ Lime injection or fabric coating agent used: Type: _____ Feed rate: _____
☒ This is the only control equipment on this air contaminant source
If no, this control equipment is: ☐ Primary ☐ Secondary ☐ Parallel
List any other air contaminant sources that are also vented to this control equipment:
_____

☐ **Wet Scrubber**
Manufacturer: _____ Year installed: _____
What do you call this control equipment: _____
Pollutant(s) controlled: ☐ PE ☐ OC ☐ SO_2 ☐ NOx ☐ CO ☐ Other _____
Estimated capture efficiency (%): _____ Basis for efficiency: _____
Design control efficiency (%): _____ Basis for efficiency: _____
Type: ☐ Spray chamber ☐ Packed bed ☐ Impingement ☐ Venturi ☐ Other _____
Operating pressure drop range (inches of water): Minimum: _____ Maximum: _____
pH range for scrubbing liquid: Minimum: _____ Maximum: _____
Scrubbing liquid flow rate (gal/min): _____
Is scrubber liquid recirculated? ☐ Yes ☐ No
Water supply pressure (psig): _____ NOTE: This item for spray chambers only.
☐ This is the only control equipment on this air contaminant source
If no, this control equipment is: ☐ Primary ☐ Secondary ☐ Parallel
List any other air contaminant sources that are also vented to this control equipment:
_____

☐ **Electrostatic Precipitator**
Manufacturer: _____ Year installed: _____
What do you call this control equipment: _____
Pollutant(s) controlled: ☐ PE ☐ OC ☐ SO_2 ☐ NOx ☐ CO ☐ Other _____
Estimated capture efficiency (%): _____ Basis for efficiency: _____
Design control efficiency (%): _____ Basis for efficiency: _____

Section II - Specific Air Contaminant Source Information

Type: ☐ Plate-wire ☐ Flat-plate ☐ Tubular ☐ Wet ☐ Other _____
Number of operating fields: _____

☐ This is the only control equipment on this air contaminant source
If no, this control equipment is: ☐ Primary ☐ Secondary ☐ Parallel
List any other air contaminant sources that are also vented to this control equipment:
_____

☐ **Concentrator**
Manufacturer: _____ Year installed: _____
What do you call this control equipment: _____
Pollutant(s) controlled: ☐ PE ☐ OC ☐ SO_2 ☐ NOx ☐ CO ☐ Other _____
Estimated capture efficiency (%):_____ Basis for efficiency: _____
Design regeneration cycle time (minutes): _____
Minimum desorption air stream temperature (°F): _____
Rotational rate (revolutions/hour): _____
☐ This is the only control equipment on this air contaminant source
If no, this control equipment is: ☐ Primary ☐ Secondary ☐ Parallel
List any other air contaminant sources that are also vented to this control equipment:
_____

☐ **Catalytic Incinerator**
Manufacturer: _____ Year installed: _____
What do you call this control equipment: _____
Pollutant(s) controlled: ☐ PE ☐ OC ☐ SO_2 ☐ NOx ☐ CO ☐ Other _____
Estimated capture efficiency (%):_____ Basis for efficiency: _____
Design control efficiency (%):_____ Basis for efficiency: _____
Minimum inlet gas temperature (°F): _____
Combustion chamber residence time (seconds): _____
Minimum temperature difference (°F) across catalyst during air contaminant source operation: _____
☐ This is the only control equipment on this air contaminant source
If no, this control equipment is: ☐ Primary ☐ Secondary ☐ Parallel
List any other air contaminant sources that are also vented to this control equipment:
_____

☐ **Thermal Incinerator/Thermal Oxidizer**
Manufacturer: _____ Year installed: _____
What do you call this control equipment: _____
Pollutant(s) controlled: ☐ PE ☐ OC ☐ SO_2 ☐ NOx ☐ CO ☐ Other _____
Estimated capture efficiency (%):_____ Basis for efficiency: _____
Design control efficiency (%):_____ Basis for efficiency: _____
Minimum operating temperature (°F) and location: _____ (See line by line instructions.)
Combustion chamber residence time (seconds): _____
☐ This is the only control equipment on this air contaminant source
If no, this control equipment is: ☐ Primary ☐ Secondary ☐ Parallel
List any other air contaminant sources that are also vented to this control equipment:
_____

☐ **Flare**
Manufacturer: _____ Year installed: _____
What do you call this control equipment: _____
Pollutant(s) controlled: ☐ PE ☐ OC ☐ SO_2 ☐ NOx ☐ CO ☐ Other _____
Estimated capture efficiency (%):_____ Basis for efficiency: _____
Design control efficiency (%):_____ Basis for efficiency: _____
Type: ☐ Enclosed ☐ Elevated (open)
Ignition device: ☐ Electric arc ☐ Pilot flame
Flame presence sensor: ☐ Yes ☐ No
☐ This is the only control equipment on this air contaminant source
If no, this control equipment is: ☐ Primary ☐ Secondary ☐ Parallel
List any other air contaminant sources that are also vented to this control equipment:

Section II - Specific Air Contaminant Source Information

☐ **Condenser**

Manufacturer: _____ Year installed: _____
What do you call this control equipment: _____
Pollutant(s) controlled: ☐ PE ☐ OC ☐ SO_2 ☐ NOx ☐ CO ☐ Other _____
Estimated capture efficiency (%):_____ Basis for efficiency: _____
Design control efficiency (%):_____ Basis for efficiency: _____

Type: ☐ Indirect contact ☐ Direct contact
Maximum exhaust gas temperature (°F) during air contaminant source operation: _____
Coolant type: _____
Design coolant temperature (°F): Minimum _____ Maximum _____
Design coolant flow rate (gpm): _____
☐ This is the only control equipment on this air contaminant source
If no, this control equipment is: ☐ Primary ☐ Secondary ☐ Parallel
List any other air contaminant sources that are also vented to this control equipment:
_____

☐ **Carbon Absorber**

Manufacturer: _____ Year installed: _____
What do you call this control equipment: _____
Pollutant(s) controlled: ☐ PE ☐ OC ☐ SO_2 ☐ NOx ☐ CO ☐ Other _____
Estimated capture efficiency (%):_____ Basis for efficiency: _____
Design control efficiency (%):_____ Basis for efficiency: _____
Type: ☐ On-site regenerative ☐ Disposable
Maximum design outlet organic compound concentration (ppmv): _____
Carbon replacement frequency or regeneration cycle time (specify units): _____
Maximum temperature of the carbon bed, after regeneration (including any cooling cycle): _____
☐ This is the only control equipment on this air contaminant source
If no, this control equipment is: ☐ Primary ☐ Secondary ☐ Parallel
List any other air contaminant sources that are also vented to this control equipment:
_____

☐ **Dry Scrubber**

Manufacturer: _____ Year installed: _____
What do you call this control equipment: _____
Pollutant(s) controlled: ☐ PE ☐ OC ☐ SO_2 ☐ NOx ☐ CO ☐ Other _____
Estimated capture efficiency (%):_____ Basis for efficiency: _____
Design control efficiency (%):_____ Basis for efficiency: _____
Reagent(s) used: Type: _____ Injection rate(s): _____
Operating pressure drop range (inches of water): Minimum: _____ Maximum: _____
☐ This is the only control equipment on this air contaminant source
If no, this control equipment is: ☐ Primary ☐ Secondary ☐ Parallel
List any other air contaminant sources that are also vented to this control equipment:
_____

☐ **Paint booth filter**

Type: ☐ Paper ☐ Fiberglass ☐ Water curtain ☐ Other _____
Design control efficiency (%):_____ Basis for efficiency: _____

☐ **Other**, describe _____

Manufacturer: _____ Year installed: _____
What do you call this control equipment: _____
Pollutant(s) controlled: ☐ PE ☐ OC ☐ SO_2 ☐ NOx ☐ CO ☐ Other
Estimated capture efficiency (%): _____ Basis for efficiency: _____

Design control efficiency (%):_____ Basis for efficiency: _____
☐ This is the only control equipment on this air contaminant source
If no, this control equipment is: ☐ Primary ☐ Secondary ☐ Parallel

Section II - Specific Air Contaminant Source Information

List any other air contaminant sources that are also vented to this control equipment:

_____

6. Attach a Process or Activity Flow Diagram to this application for each air contaminant source included in the application. The diagram should indicate their relationships to one another. See the line by line PTI instructions for additional information.

7. Emissions egress point(s) information: PTIs which allow total emissions in excess of the thresholds listed below will be subject to an air quality modeling analysis. This analysis is to assure that the impact from the requested project will not exceed Ohio=s Acceptable Incremental Impacts for criteria pollutants and/or Maximum Allowable Ground Level Concentrations (MAGLC) for air toxics. Permit requests that would have unacceptable impacts can not be approved as proposed. See the line by line PTI instructions for additional information.

   Complete the tables below if the requested allowable annual emission rate for this PTI exceeds any of the following:

   - Particulate Matter (PM10): 10 tons per year
   - Sulfur Dioxide (SO2): 25 tons per year
   - Nitrogen Oxides (NOx): 25 tons per year
   - Carbon Monoxide (CO): 100 tons per year
   - Air Toxic: 1 ton per year. An air toxic is any air pollutant for which the American Council of Governmental Industrial Hygienists (ACGIH) has established a Threshold Limit Value (TLV).

   Complete Table 7-A below for each stack emissions egress point. An egress point is a point at which emissions from an air contaminant source are released into the ambient (outside) air. List each individual egress point on a separate line.

Table 7-A, Stack Egress Point Information

Company Name or ID for the Egress Point (examples: Stack A; Boiler Stack; etc.)	Type Code*	Stack Egress Point Shape and Dimensions (in)(examples: round 10 inch ID; rectangular 14 X 16 inches; etc.)	Stack Egress Point Height from the Ground (ft)	Stack Temp. at Max. Capacity (F)	Stack Flow Rate at Max. Capacity (ACFM)	Minimum Distance to the Property Line (ft)
CMD STACK 1	V	Round: 38-inch ID	250	250	48,071	1,000

*Type codes for stack egress points:

A. vertical stack (unobstructed): There are no obstructions to upward flow in or on the stack such as a rain cap.
B. vertical stack (obstructed): There are obstructions to the upward flow, such as a rain cap, which prevents or inhibits the air flow in a vertical direction.
C. non-vertical stack: The stack directs the air flow in a direction which is not directly upward.

Complete Table 7-B below for each fugitive emissions egress point. List each individual egress point on a separate line. Refer to the description of the fugitive egress point type codes below the table for use in completing the type code column of the table. For air contaminant sources like roadways and storage piles, only the first 5 columns need to be completed. For an air contaminant source with multiple fugitive emissions egress points, include only the primary egress points.

Table 7-B, Fugitive Egress Point Information

Company ID for the Egress Point (examples; Garage Door B, Building C; Roof Monitor; etc.)	Type Code*	Egress Point Description (examples: garage door, 12 X 30 feet, west wall; outside gravel storage piles; etc.)	Fugitive Egress Point Height from the Ground (ft)	Minimum Distance to the Property Line (ft)	Exit Gas Temp. (F)

*Type codes for fugitive egress point:

Section II - Specific Air Contaminant Source Information

D. door or window
E. other opening in the building without a duct
F. no stack and no building enclosing the air contaminant source (e.g., roadways)

Complete Table 7-C below for each Stack Egress Point identified in Table 7-A above. In each case, use the dimensions of the largest nearby building, building segment or structure. List each individual egress point on a separate line. Use the same Company Name or ID for the Egress Point in Table 7-C that was used in Table 7-A. See the line by line PTI instructions for additional information.

Table 7-C, Egress Point Additional Information (Add rows as necessary)			
Company ID or Name for the Egress Point	**Building Height (ft)**	**Building Width (ft)**	**Building Length (ft)**
CMD STACK 1	225	70	250

8. Request for Federally Enforceable Limits

As part of this permit application, do you wish to propose voluntary restrictions to limit emissions in order to avoid specific requirements listed below, (i.e., are you requesting federally enforceable limits to obtain synthetic minor status)?

☐ yes
☒ no
☐ not sure - please contact me if this affects me

If yes, why are you requesting federally enforceable limits? Check all that apply.

a. ☐ to avoid being a major source (see OAC rule 3745-77-01)
b. ☐ to avoid being a major MACT source (see OAC rule 3745-31-01)
c. ☐ to avoid being a major modification (see OAC rule 3745-31-01)
d. ☐ to avoid being a major stationary source (see OAC rule 3745-31-01)
e. ☐ to avoid an air dispersion modeling requirement (see Engineering Guide # 69)
f. ☐ to avoid another requirement. Describe: _____

If you checked a., b. or d., please attach a facility-wide potential to emit (PTE) analysis (for each pollutant) and synthetic minor strategy to this application. (See line by line instructions for definition of PTE.) If you checked c., please attach a net emission change analysis to this application.

9. If this air contaminant source utilizes any continuous emissions monitoring equipment for indicating or demonstrating compliance, complete the following table. This does not include continuous parametric monitoring systems.

Company ID for Egress Point	Type of Monitor	Applicable performance specification (40 CFR 60, Appendix B)	Pollutant(s) Monitored
CMD STACK 1	SO_2 IN EXHAUST OR H_2S IN FUEL (TO BE DETERMINED)	SPECIFICATION 3 (SO_2) SPECIFICATION 7 (H_2S)	SO_2 H_2S

10. Do you wish to permit this air contaminant source as a portable source, allowing relocation within the state in accordance with OAC rule 3745-31-03 or OAC rule 3745-31-05?

☐ yes - Note: notification requirements in rules cited above must be followed.
☒ no

11. The appropriate Emissions Activity Category (EAC) form(s) must be completed and attached for each air contaminant source. At least one complete EAC form must be submitted for each air contaminant source for the application to be considered complete. Refer to the list attached to the PTI instructions.

Section II - Specific Air Contaminant Source Information

NOTE: One copy of this section should be filled out for each air contaminant source covered by this PTI application. See the line by line PTI instructions for additional information.

1. Company identification (name for air contaminant source for which you are applying): HOT GAS GENERATOR 2

2. List all equipment that are part of this air contaminant source: HOT GAS GENERATOR 2

3. Air Contaminant Source Installation or Modification Schedule (must be completed regardless of date of installation or modification):

   When did/will you begin to install or modify the air contaminant source? (month/year) SECOND QUARTER 2008

   When did/will you begin to operate the air contaminant source? (month/year) THIRD QUARTER 2011 **OR** after issuance of PTI _____

4. Emissions Information: The following table requests information needed to determine the applicable requirements and the compliance status of this air contaminant source with those requirements. Suggestions for how to estimate emissions may be found in the instructions to the Emissions Activity Category (EAC) forms required with this application. If you need further assistance, contact your Ohio EPA permit representative.

   - If total potential emissions of HAPs or any Air Toxic is greater than 1 ton/yr, fill in the table for that (those) pollutant(s). For all other pollutants, if "Emissions before controls (max), lb/hr" multiplied by 24 hours/day is greater than 10 lb/day, fill in the table for that pollutant.
   - If you have no add-on control equipment, "Emissions before controls= will be the same as "Actual emissions"
   - Annual emissions should be based on operating 8760 hr/yr unless you are requesting operating restrictions to limit emissions in line # 8 or have described inherent limitations below.
   - If you use units other than lb/hr or ton/yr, specify the units used (e.g., gr/dscf, lb/ton charged, lb/MMBtu, ton/12-months).
   - Requested Allowable (ton/yr) is often equivalent to Potential to Emit (PTE) as defined in OAC rule 3745-31-01 and OAC rule 3745-77-01.

Pollutant	Emissions before controls (max) (lb/hr)	Actual emissions (lb/hr)	Actual emissions (ton/year)	Requested Allowable (lb/hr)	Requested Allowable (ton/year)
Particulate emissions (PE) (formerly particulate matter, PM)	2.3	0.6	2.62	0.6	2.62
PM_{10} (PM < 10 microns in diameter)	2.3	0.6	2.62	0.6	2.62
Sulfur dioxide (SO_2)	0.94	0.24	1.06	0.24	1.06
Nitrogen oxides (NO_x)	10.2	1.32	5.8	1.32	5.8
Carbon monoxide (CO)	8.6	2.23	9.75	2.23	9.75
Organic compounds (OC)	0.56	0.15	0.64	0.15	0.64
Volatile organic compounds (VOC)	0.56	0.15	0.64	0.15	0.64
Total HAPs	0.2	0.05	0.22	0.05	0.22
Highest single HAP: (hexane)	0.18	0.048	0.21	0.048	0.21
Air Toxics (see instructions):	0.2	0.05	0.22	0.05	0.22

Provide your calculations as an attachment and explain how all process variables and emission factors were selected. Note the emissions factor(s) employed and document the origin. Example: AP-42, Table 4.4-3 (8/97); stack test, Method 5, 4/96; mass balance based on MSDS; etc.

Section II - Specific Air Contaminant Source Information

5. **Does this air contaminant source employ emissions control equipment?**

☒ **Yes** - fill out the applicable information below.

☐ **No** - proceed to item # 6.

Note: Pollutant abbreviations used below: Particulates = PE; Organic compounds = OC; Sulfur dioxide = SO_2; Nitrogen oxides = NOx; Carbon monoxide = CO

☐ **Cyclone/Multiclone**

Manufacturer: _____ Year installed: _____
What do you call this control equipment: _____
Pollutant(s) controlled: ☐ PE ☐ OC ☐ SO_2 ☐ NOx ☐ CO ☐ Other _____
Estimated capture efficiency (%): _____ Basis for efficiency: _____
Design control efficiency (%): _____ Basis for efficiency: _____
Type: ☐ Cyclone ☐ Multiclone ☐ Rotoclone ☐ Other _____
☐ This is the only control equipment on this air contaminant source
If no, this control equipment is: ☐ Primary ☐ Secondary ☐ Parallel
List any other air contaminant sources that are also vented to this control equipment:
_____

☒ **Fabric Filter/Baghouse**

Manufacturer: TO BE DETERMINED Year installed: NEW FACILITY
What do you call this control equipment: CMD BAGHOUSE 2
Pollutant(s) controlled: ☒ PE ☐ OC ☐ SO_2 ☐ NOx ☐ CO ☐ Other _____
Estimated capture efficiency (%):100 Basis for efficiency: ENGINEERING DESIGN
Design control efficiency (%):99.9 Basis for efficiency: LITERATURE
Operating pressure drop range (inches of water): Minimum: ____3____ Maximum: ___6___
Pressure type: ☐ Negative pressure ☒ Positive pressure
Fabric cleaning mechanism: ☐ Reverse air ☒ Pulse jet ☐ Shaker ☐ Other _____
☐ Lime injection or fabric coating agent used: Type: _____ Feed rate: _____
☒ This is the only control equipment on this air contaminant source
If no, this control equipment is: ☐ Primary ☐ Secondary ☐ Parallel
List any other air contaminant sources that are also vented to this control equipment:
_____

☐ **Wet Scrubber**

Manufacturer: _____ Year installed: _____
What do you call this control equipment: _____
Pollutant(s) controlled: ☐ PE ☐ OC ☐ SO_2 ☐ NOx ☐ CO ☐ Other _____
Estimated capture efficiency (%): _____ Basis for efficiency: _____
Design control efficiency (%): _____ Basis for efficiency: _____
Type: ☐ Spray chamber ☐ Packed bed ☐ Impingement ☐ Venturi ☐ Other _____
Operating pressure drop range (inches of water): Minimum: _____ Maximum: _____
pH range for scrubbing liquid: Minimum: _____ Maximum: _____
Scrubbing liquid flow rate (gal/min): _____
Is scrubber liquid recirculated? ☐ Yes ☐ No
Water supply pressure (psig): _____ NOTE: This item for spray chambers only.
☐ This is the only control equipment on this air contaminant source
If no, this control equipment is: ☐ Primary ☐ Secondary ☐ Parallel
List any other air contaminant sources that are also vented to this control equipment:
_____

☐ **Electrostatic Precipitator**

Manufacturer: _____ Year installed: _____
What do you call this control equipment: _____
Pollutant(s) controlled: ☐ PE ☐ OC ☐ SO_2 ☐ NOx ☐ CO ☐ Other _____
Estimated capture efficiency (%): _____ Basis for efficiency: _____
Design control efficiency (%): _____ Basis for efficiency: _____

Section II - Specific Air Contaminant Source Information

Type: ☐ Plate-wire ☐ Flat-plate ☐ Tubular ☐ Wet ☐ Other _____
Number of operating fields: _____

☐ This is the only control equipment on this air contaminant source
If no, this control equipment is: ☐ Primary ☐ Secondary ☐ Parallel
List any other air contaminant sources that are also vented to this control equipment:
_____

☐ **Concentrator**
Manufacturer: _____ Year installed: _____
What do you call this control equipment: _____
Pollutant(s) controlled: ☐ PE ☐ OC ☐ SO_2 ☐ NOx ☐ CO ☐ Other _____
Estimated capture efficiency (%):_____ Basis for efficiency: _____
Design regeneration cycle time (minutes): _____
Minimum desorption air stream temperature (°F): _____
Rotational rate (revolutions/hour): _____
☐ This is the only control equipment on this air contaminant source
If no, this control equipment is: ☐ Primary ☐ Secondary ☐ Parallel
List any other air contaminant sources that are also vented to this control equipment:
_____

☐ **Catalytic Incinerator**
Manufacturer: _____ Year installed: _____
What do you call this control equipment: _____
Pollutant(s) controlled: ☐ PE ☐ OC ☐ SO_2 ☐ NOx ☐ CO ☐ Other _____
Estimated capture efficiency (%):_____ Basis for efficiency: _____
Design control efficiency (%):_____ Basis for efficiency: _____
Minimum inlet gas temperature (°F): _____
Combustion chamber residence time (seconds): _____
Minimum temperature difference (°F) across catalyst during air contaminant source operation: _____
☐ This is the only control equipment on this air contaminant source
If no, this control equipment is: ☐ Primary ☐ Secondary ☐ Parallel
List any other air contaminant sources that are also vented to this control equipment:
_____

☐ **Thermal Incinerator/Thermal Oxidizer**
Manufacturer: _____ Year installed: _____
What do you call this control equipment: _____
Pollutant(s) controlled: ☐ PE ☐ OC ☐ SO_2 ☐ NOx ☐ CO ☐ Other _____
Estimated capture efficiency (%):_____ Basis for efficiency: _____
Design control efficiency (%):_____ Basis for efficiency: _____
Minimum operating temperature (°F) and location: _____ (See line by line instructions.)
Combustion chamber residence time (seconds): _____
☐ This is the only control equipment on this air contaminant source
If no, this control equipment is: ☐ Primary ☐ Secondary ☐ Parallel
List any other air contaminant sources that are also vented to this control equipment:
_____

☐ **Flare**
Manufacturer: _____ Year installed: _____
What do you call this control equipment: _____
Pollutant(s) controlled: ☐ PE ☐ OC ☐ SO_2 ☐ NOx ☐ CO ☐ Other _____
Estimated capture efficiency (%):_____ Basis for efficiency: _____
Design control efficiency (%):_____ Basis for efficiency: _____
Type: ☐ Enclosed ☐ Elevated (open)
Ignition device: ☐ Electric arc ☐ Pilot flame
Flame presence sensor: ☐ Yes ☐ No
☐ This is the only control equipment on this air contaminant source
If no, this control equipment is: ☐ Primary ☐ Secondary ☐ Parallel
List any other air contaminant sources that are also vented to this control equipment:

Section II - Specific Air Contaminant Source Information

☐ **Condenser**

Manufacturer: _____ Year installed: _____
What do you call this control equipment: _____
Pollutant(s) controlled: ☐ PE ☐ OC ☐ SO_2 ☐ NOx ☐ CO ☐ Other _____
Estimated capture efficiency (%):_____ Basis for efficiency: _____
Design control efficiency (%):_____ Basis for efficiency: _____

Type: ☐ Indirect contact ☐ Direct contact
Maximum exhaust gas temperature (°F) during air contaminant source operation: _____
Coolant type: _____
Design coolant temperature (°F): Minimum _____ Maximum _____
Design coolant flow rate (gpm): _____
☐ This is the only control equipment on this air contaminant source
If no, this control equipment is: ☐ Primary ☐ Secondary ☐ Parallel
List any other air contaminant sources that are also vented to this control equipment:
_____

☐ **Carbon Absorber**

Manufacturer: _____ Year installed: _____
What do you call this control equipment: _____
Pollutant(s) controlled: ☐ PE ☐ OC ☐ SO_2 ☐ NOx ☐ CO ☐ Other _____
Estimated capture efficiency (%):_____ Basis for efficiency: _____
Design control efficiency (%):_____ Basis for efficiency: _____
Type: ☐ On-site regenerative ☐ Disposable
Maximum design outlet organic compound concentration (ppmv): _____
Carbon replacement frequency or regeneration cycle time (specify units): _____
Maximum temperature of the carbon bed, after regeneration (including any cooling cycle): _____
☐ This is the only control equipment on this air contaminant source
If no, this control equipment is: ☐ Primary ☐ Secondary ☐ Parallel
List any other air contaminant sources that are also vented to this control equipment:
_____

☐ **Dry Scrubber**

Manufacturer: _____ Year installed: _____
What do you call this control equipment: _____
Pollutant(s) controlled: ☐ PE ☐ OC ☐ SO_2 ☐ NOx ☐ CO ☐ Other _____
Estimated capture efficiency (%):_____ Basis for efficiency: _____
Design control efficiency (%):_____ Basis for efficiency: _____
Reagent(s) used: Type: _____ Injection rate(s): _____
Operating pressure drop range (inches of water): Minimum: _____ Maximum: _____
☐ This is the only control equipment on this air contaminant source
If no, this control equipment is: ☐ Primary ☐ Secondary ☐ Parallel
List any other air contaminant sources that are also vented to this control equipment:
_____

☐ **Paint booth filter**

Type: ☐ Paper ☐ Fiberglass ☐ Water curtain ☐ Other _____
Design control efficiency (%):_____ Basis for efficiency: _____

☐ **Other**, describe _____

Manufacturer: _____ Year installed: _____
What do you call this control equipment: _____
Pollutant(s) controlled: ☐ PE ☐ OC ☐ SO_2 ☐ NOx ☐ CO ☐ Other
Estimated capture efficiency (%): _____ Basis for efficiency: _____

Design control efficiency (%):_____ Basis for efficiency: _____
☐ This is the only control equipment on this air contaminant source
If no, this control equipment is: ☐ Primary ☐ Secondary ☐ Parallel

Section II - Specific Air Contaminant Source Information

List any other air contaminant sources that are also vented to this control equipment:

_____

6. Attach a Process or Activity Flow Diagram to this application for each air contaminant source included in the application. The diagram should indicate their relationships to one another. See the line by line PTI instructions for additional information.

7. Emissions egress point(s) information: PTIs which allow total emissions in excess of the thresholds listed below will be subject to an air quality modeling analysis. This analysis is to assure that the impact from the requested project will not exceed Ohio=s Acceptable Incremental Impacts for criteria pollutants and/or Maximum Allowable Ground Level Concentrations (MAGLC) for air toxics. Permit requests that would have unacceptable impacts can not be approved as proposed. See the line by line PTI instructions for additional information.

   Complete the tables below if the requested allowable annual emission rate for this PTI exceeds any of the following:

   - Particulate Matter (PM10): 10 tons per year
   - Sulfur Dioxide (SO2): 25 tons per year
   - Nitrogen Oxides (NOx): 25 tons per year
   - Carbon Monoxide (CO): 100 tons per year
   - Air Toxic: 1 ton per year. An air toxic is any air pollutant for which the American Council of Governmental Industrial Hygienists (ACGIH) has established a Threshold Limit Value (TLV).

   Complete Table 7-A below for each stack emissions egress point. An egress point is a point at which emissions from an air contaminant source are released into the ambient (outside) air. List each individual egress point on a separate line.

Table 7-A, Stack Egress Point Information

Company Name or ID for the Egress Point (examples: Stack A; Boiler Stack; etc.)	Type Code*	Stack Egress Point Shape and Dimensions (in)(examples: round 10 inch ID; rectangular 14 X 16 inches; etc.)	Stack Egress Point Height from the Ground (ft)	Stack Temp. at Max. Capacity (F)	Stack Flow Rate at Max. Capacity (ACFM)	Minimum Distance to the Property Line (ft)
CMD STACK 2	V	Round: 38-inch ID	250	250	48,071	1,000

*Type codes for stack egress points:

A. vertical stack (unobstructed): There are no obstructions to upward flow in or on the stack such as a rain cap.
B. vertical stack (obstructed): There are obstructions to the upward flow, such as a rain cap, which prevents or inhibits the air flow in a vertical direction.
C. non-vertical stack: The stack directs the air flow in a direction which is not directly upward.

Complete Table 7-B below for each fugitive emissions egress point. List each individual egress point on a separate line. Refer to the description of the fugitive egress point type codes below the table for use in completing the type code column of the table. For air contaminant sources like roadways and storage piles, only the first 5 columns need to be completed. For an air contaminant source with multiple fugitive emissions egress points, include only the primary egress points.

Table 7-B, Fugitive Egress Point Information

Company ID for the Egress Point (examples; Garage Door B, Building C; Roof Monitor; etc.)	Type Code*	Egress Point Description (examples: garage door, 12 X 30 feet, west wall; outside gravel storage piles; etc.)	Fugitive Egress Point Height from the Ground (ft)	Minimum Distance to the Property Line (ft)	Exit Gas Temp. (F)

*Type codes for fugitive egress point:

Section II - Specific Air Contaminant Source Information

D. door or window
E. other opening in the building without a duct
F. no stack and no building enclosing the air contaminant source (e.g., roadways)

Complete Table 7-C below for each Stack Egress Point identified in Table 7-A above. In each case, use the dimensions of the largest nearby building, building segment or structure. List each individual egress point on a separate line. Use the same Company Name or ID for the Egress Point in Table 7-C that was used in Table 7-A. See the line by line PTI instructions for additional information.

Table 7-C, Egress Point Additional Information (Add rows as necessary)

Company ID or Name for the Egress Point	Building Height (ft)	Building Width (ft)	Building Length (ft)
CMD STACK 2	225	70	250

8. Request for Federally Enforceable Limits

As part of this permit application, do you wish to propose voluntary restrictions to limit emissions in order to avoid specific requirements listed below, (i.e., are you requesting federally enforceable limits to obtain synthetic minor status)?

☐ yes
☒ no
☐ not sure - please contact me if this affects me

If yes, why are you requesting federally enforceable limits? Check all that apply.

a. ☐ to avoid being a major source (see OAC rule 3745-77-01)
b. ☐ to avoid being a major MACT source (see OAC rule 3745-31-01)
c. ☐ to avoid being a major modification (see OAC rule 3745-31-01)
d. ☐ to avoid being a major stationary source (see OAC rule 3745-31-01)
e. ☐ to avoid an air dispersion modeling requirement (see Engineering Guide # 69)
f. ☐ to avoid another requirement. Describe: _____

If you checked a., b. or d., please attach a facility-wide potential to emit (PTE) analysis (for each pollutant) and synthetic minor strategy to this application. (See line by line instructions for definition of PTE.) If you checked c., please attach a net emission change analysis to this application.

9. If this air contaminant source utilizes any continuous emissions monitoring equipment for indicating or demonstrating compliance, complete the following table. This does not include continuous parametric monitoring systems.

Company ID for Egress Point	Type of Monitor	Applicable performance specification (40 CFR 60, Appendix B)	Pollutant(s) Monitored
CMD STACK 2	SO_2 IN EXHAUST OR H_2S IN FUEL (TO BE DETERMINED)	SPECIFICATION 3 (SO_2) SPECIFICATION 7 (H_2S)	SO_2 H_2S

10. Do you wish to permit this air contaminant source as a portable source, allowing relocation within the state in accordance with OAC rule 3745-31-03 or OAC rule 3745-31-05?

☐ yes - Note: notification requirements in rules cited above must be followed.
☒ no

11. The appropriate Emissions Activity Category (EAC) form(s) must be completed and attached for each air contaminant source. At least one complete EAC form must be submitted for each air contaminant source for the application to be considered complete. Refer to the list attached to the PTI instructions.

Section II - Specific Air Contaminant Source Information

NOTE: One copy of this section should be filled out for each air contaminant source covered by this PTI application. See the line by line PTI instructions for additional information.

1. Company identification (name for air contaminant source for which you are applying): HOT GAS GENERATOR 3

2. List all equipment that are part of this air contaminant source: HOT GAS GENERATOR 3

3. Air Contaminant Source Installation or Modification Schedule (must be completed regardless of date of installation or modification):

   When did/will you begin to install or modify the air contaminant source? (month/year) SECOND QUARTER 2008

   When did/will you begin to operate the air contaminant source? (month/year) THIRD QUARTER 2011 **OR** after issuance of PTI _____

4. Emissions Information: The following table requests information needed to determine the applicable requirements and the compliance status of this air contaminant source with those requirements. Suggestions for how to estimate emissions may be found in the instructions to the Emissions Activity Category (EAC) forms required with this application. If you need further assistance, contact your Ohio EPA permit representative.

   - If total potential emissions of HAPs or any Air Toxic is greater than 1 ton/yr, fill in the table for that (those) pollutant(s). For all other pollutants, if "Emissions before controls (max), lb/hr" multiplied by 24 hours/day is greater than 10 lb/day, fill in the table for that pollutant.
   - If you have no add-on control equipment, "Emissions before controls= will be the same as "Actual emissions"
   - Annual emissions should be based on operating 8760 hr/yr unless you are requesting operating restrictions to limit emissions in line # 8 or have described inherent limitations below.
   - If you use units other than lb/hr or ton/yr, specify the units used (e.g., gr/dscf, lb/ton charged, lb/MMBtu, ton/12-months).
   - Requested Allowable (ton/yr) is often equivalent to Potential to Emit (PTE) as defined in OAC rule 3745-31-01 and OAC rule 3745-77-01.

Pollutant	Emissions before controls (max) (lb/hr)	Actual emissions (lb/hr)	Actual emissions (ton/year)	Requested Allowable (lb/hr)	Requested Allowable (ton/year)
Particulate emissions (PE) (formerly particulate matter, PM)	2.3	0.6	2.62	0.6	2.62
PM_{10} (PM < 10 microns in diameter)	2.3	0.6	2.62	0.6	2.62
Sulfur dioxide (SO_2)	0.94	0.24	1.06	0.24	1.06
Nitrogen oxides (NO_x)	10.2	1.32	5.8	1.32	5.8
Carbon monoxide (CO)	8.6	2.23	9.75	2.23	9.75
Organic compounds (OC)	0.56	0.15	0.64	0.15	0.64
Volatile organic compounds (VOC)	0.56	0.15	0.64	0.15	0.64
Total HAPs	0.2	0.05	0.22	0.05	0.22
Highest single HAP: (hexane)	0.18	0.048	0.21	0.048	0.21
Air Toxics (see instructions):	0.2	0.05	0.22	0.05	0.22

Provide your calculations as an attachment and explain how all process variables and emission factors were selected. Note the emissions factor(s) employed and document the origin. Example: AP-42, Table 4.4-3 (8/97); stack test, Method 5, 4/96; mass balance based on MSDS; etc.

Section II - Specific Air Contaminant Source Information

5. **Does this air contaminant source employ emissions control equipment?**

☒ **Yes** - fill out the applicable information below.

☐ **No** - proceed to item # 6.

Note: Pollutant abbreviations used below: Particulates = PE; Organic compounds = OC; Sulfur dioxide = SO_2; Nitrogen oxides = NOx; Carbon monoxide = CO

☐ **Cyclone/Multiclone**
Manufacturer: _____ Year installed: _____
What do you call this control equipment: _____
Pollutant(s) controlled: ☐ PE ☐ OC ☐ SO_2 ☐ NOx ☐ CO ☐ Other _____
Estimated capture efficiency (%): _____ Basis for efficiency: _____
Design control efficiency (%): _____ Basis for efficiency: _____
Type: ☐ Cyclone ☐ Multiclone ☐ Rotoclone ☐ Other _____
☐ This is the only control equipment on this air contaminant source
If no, this control equipment is: ☐ Primary ☐ Secondary ☐ Parallel
List any other air contaminant sources that are also vented to this control equipment:
_____

☒ **Fabric Filter/Baghouse**
Manufacturer: TO BE DETERMINED Year installed: NEW FACILITY
What do you call this control equipment: CMD BAGHOUSE 2
Pollutant(s) controlled: ☒ PE ☐ OC ☐ SO_2 ☐ NOx ☐ CO ☐ Other _____
Estimated capture efficiency (%):100 Basis for efficiency: ENGINEERING DESIGN
Design control efficiency (%):99.9 Basis for efficiency: LITERATURE
Operating pressure drop range (inches of water): Minimum: ____3____ Maximum: ___6___
Pressure type: ☐ Negative pressure ☒ Positive pressure
Fabric cleaning mechanism: ☐ Reverse air ☒ Pulse jet ☐ Shaker ☐ Other _____
☐ Lime injection or fabric coating agent used: Type: _____ Feed rate: _____
☒ This is the only control equipment on this air contaminant source
If no, this control equipment is: ☐ Primary ☐ Secondary ☐ Parallel
List any other air contaminant sources that are also vented to this control equipment:
_____

☐ **Wet Scrubber**
Manufacturer: _____ Year installed: _____
What do you call this control equipment: _____
Pollutant(s) controlled: ☐ PE ☐ OC ☐ SO_2 ☐ NOx ☐ CO ☐ Other _____
Estimated capture efficiency (%): _____ Basis for efficiency: _____
Design control efficiency (%): _____ Basis for efficiency: _____
Type: ☐ Spray chamber ☐ Packed bed ☐ Impingement ☐ Venturi ☐ Other _____
Operating pressure drop range (inches of water): Minimum: _____ Maximum: _____
pH range for scrubbing liquid: Minimum: _____ Maximum: _____
Scrubbing liquid flow rate (gal/min): _____
Is scrubber liquid recirculated? ☐ Yes ☐ No
Water supply pressure (psig): _____ NOTE: This item for spray chambers only.
☐ This is the only control equipment on this air contaminant source
If no, this control equipment is: ☐ Primary ☐ Secondary ☐ Parallel
List any other air contaminant sources that are also vented to this control equipment:
_____

☐ **Electrostatic Precipitator**
Manufacturer: _____ Year installed: _____
What do you call this control equipment: _____
Pollutant(s) controlled: ☐ PE ☐ OC ☐ SO_2 ☐ NOx ☐ CO ☐ Other _____
Estimated capture efficiency (%): _____ Basis for efficiency: _____
Design control efficiency (%): _____ Basis for efficiency: _____

Section II - Specific Air Contaminant Source Information

Type: ☐ Plate-wire ☐ Flat-plate ☐ Tubular ☐ Wet ☐ Other _____
Number of operating fields: _____

☐ This is the only control equipment on this air contaminant source
If no, this control equipment is: ☐ Primary ☐ Secondary ☐ Parallel
List any other air contaminant sources that are also vented to this control equipment:
_____

☐ **Concentrator**
Manufacturer: _____ Year installed: _____
What do you call this control equipment: _____
Pollutant(s) controlled: ☐ PE ☐ OC ☐ SO_2 ☐ NOx ☐ CO ☐ Other _____
Estimated capture efficiency (%):_____ Basis for efficiency: _____
Design regeneration cycle time (minutes): _____
Minimum desorption air stream temperature (°F): _____
Rotational rate (revolutions/hour): _____
☐ This is the only control equipment on this air contaminant source
If no, this control equipment is: ☐ Primary ☐ Secondary ☐ Parallel
List any other air contaminant sources that are also vented to this control equipment:
_____

☐ **Catalytic Incinerator**
Manufacturer: _____ Year installed: _____
What do you call this control equipment: _____
Pollutant(s) controlled: ☐ PE ☐ OC ☐ SO_2 ☐ NOx ☐ CO ☐ Other _____
Estimated capture efficiency (%):_____ Basis for efficiency: _____
Design control efficiency (%):_____ Basis for efficiency: _____
Minimum inlet gas temperature (°F): _____
Combustion chamber residence time (seconds): _____
Minimum temperature difference (°F) across catalyst during air contaminant source operation: _____
☐ This is the only control equipment on this air contaminant source
If no, this control equipment is: ☐ Primary ☐ Secondary ☐ Parallel
List any other air contaminant sources that are also vented to this control equipment:
_____

☐ **Thermal Incinerator/Thermal Oxidizer**
Manufacturer: _____ Year installed: _____
What do you call this control equipment: _____
Pollutant(s) controlled: ☐ PE ☐ OC ☐ SO_2 ☐ NOx ☐ CO ☐ Other _____
Estimated capture efficiency (%):_____ Basis for efficiency: _____
Design control efficiency (%):_____ Basis for efficiency: _____
Minimum operating temperature (°F) and location: _____ (See line by line instructions.)
Combustion chamber residence time (seconds): _____
☐ This is the only control equipment on this air contaminant source
If no, this control equipment is: ☐ Primary ☐ Secondary ☐ Parallel
List any other air contaminant sources that are also vented to this control equipment:
_____

☐ **Flare**
Manufacturer: _____ Year installed: _____
What do you call this control equipment: _____
Pollutant(s) controlled: ☐ PE ☐ OC ☐ SO_2 ☐ NOx ☐ CO ☐ Other _____
Estimated capture efficiency (%):_____ Basis for efficiency: _____
Design control efficiency (%):_____ Basis for efficiency: _____
Type: ☐ Enclosed ☐ Elevated (open)
Ignition device: ☐ Electric arc ☐ Pilot flame
Flame presence sensor: ☐ Yes ☐ No
☐ This is the only control equipment on this air contaminant source
If no, this control equipment is: ☐ Primary ☐ Secondary ☐ Parallel
List any other air contaminant sources that are also vented to this control equipment:

Section II - Specific Air Contaminant Source Information

☐ **Condenser**
Manufacturer: _____ Year installed: _____
What do you call this control equipment: _____
Pollutant(s) controlled: ☐ PE ☐ OC ☐ SO_2 ☐ NOx ☐ CO ☐ Other _____
Estimated capture efficiency (%):_____ Basis for efficiency: _____
Design control efficiency (%):_____ Basis for efficiency: _____

Type: ☐ Indirect contact ☐ Direct contact
Maximum exhaust gas temperature (°F) during air contaminant source operation: _____
Coolant type: _____
Design coolant temperature (°F): Minimum _____ Maximum _____
Design coolant flow rate (gpm): _____
☐ This is the only control equipment on this air contaminant source
If no, this control equipment is: ☐ Primary ☐ Secondary ☐ Parallel
List any other air contaminant sources that are also vented to this control equipment:
_____

☐ **Carbon Absorber**
Manufacturer: _____ Year installed: _____
What do you call this control equipment: _____
Pollutant(s) controlled: ☐ PE ☐ OC ☐ SO_2 ☐ NOx ☐ CO ☐ Other _____
Estimated capture efficiency (%):_____ Basis for efficiency: _____
Design control efficiency (%):_____ Basis for efficiency: _____
Type: ☐ On-site regenerative ☐ Disposable
Maximum design outlet organic compound concentration (ppmv): _____
Carbon replacement frequency or regeneration cycle time (specify units): _____
Maximum temperature of the carbon bed, after regeneration (including any cooling cycle): _____
☐ This is the only control equipment on this air contaminant source
If no, this control equipment is: ☐ Primary ☐ Secondary ☐ Parallel
List any other air contaminant sources that are also vented to this control equipment:
_____

☐ **Dry Scrubber**
Manufacturer: _____ Year installed: _____
What do you call this control equipment: _____
Pollutant(s) controlled: ☐ PE ☐ OC ☐ SO_2 ☐ NOx ☐ CO ☐ Other _____
Estimated capture efficiency (%):_____ Basis for efficiency: _____
Design control efficiency (%):_____ Basis for efficiency: _____
Reagent(s) used: Type: _____ Injection rate(s): _____
Operating pressure drop range (inches of water): Minimum: _____ Maximum: _____
☐ This is the only control equipment on this air contaminant source
If no, this control equipment is: ☐ Primary ☐ Secondary ☐ Parallel
List any other air contaminant sources that are also vented to this control equipment:
_____

☐ **Paint booth filter**
Type: ☐ Paper ☐ Fiberglass ☐ Water curtain ☐ Other _____
Design control efficiency (%):_____ Basis for efficiency: _____

☐ **Other**, describe _____
Manufacturer: _____ Year installed: _____
What do you call this control equipment: _____
Pollutant(s) controlled: ☐ PE ☐ OC ☐ SO_2 ☐ NOx ☐ CO ☐ Other
Estimated capture efficiency (%): _____ Basis for efficiency: _____

Design control efficiency (%):_____ Basis for efficiency: _____
☐ This is the only control equipment on this air contaminant source
If no, this control equipment is: ☐ Primary ☐ Secondary ☐ Parallel

Section II - Specific Air Contaminant Source Information

List any other air contaminant sources that are also vented to this control equipment:

_____

6. Attach a Process or Activity Flow Diagram to this application for each air contaminant source included in the application. The diagram should indicate their relationships to one another. See the line by line PTI instructions for additional information.

7. Emissions egress point(s) information: PTIs which allow total emissions in excess of the thresholds listed below will be subject to an air quality modeling analysis. This analysis is to assure that the impact from the requested project will not exceed Ohio=s Acceptable Incremental Impacts for criteria pollutants and/or Maximum Allowable Ground Level Concentrations (MAGLC) for air toxics. Permit requests that would have unacceptable impacts can not be approved as proposed. See the line by line PTI instructions for additional information.

   Complete the tables below if the requested allowable annual emission rate for this PTI exceeds any of the following:

   - Particulate Matter (PM10): 10 tons per year
   - Sulfur Dioxide (SO2): 25 tons per year
   - Nitrogen Oxides (NOx): 25 tons per year
   - Carbon Monoxide (CO): 100 tons per year
   - Air Toxic: 1 ton per year. An air toxic is any air pollutant for which the American Council of Governmental Industrial Hygienists (ACGIH) has established a Threshold Limit Value (TLV).

   Complete Table 7-A below for each stack emissions egress point. An egress point is a point at which emissions from an air contaminant source are released into the ambient (outside) air. List each individual egress point on a separate line.

Table 7-A, Stack Egress Point Information

Company Name or ID for the Egress Point (examples: Stack A; Boiler Stack; etc.)	Type Code*	Stack Egress Point Shape and Dimensions (in)(examples: round 10 inch ID; rectangular 14 X 16 inches; etc.)	Stack Egress Point Height from the Ground (ft)	Stack Temp. at Max. Capacity (F)	Stack Flow Rate at Max. Capacity (ACFM)	Minimum Distance to the Property Line (ft)
CMD STACK 3	V	Round: 38-inch ID	250	250	48,071	1,000

*Type codes for stack egress points:

A. vertical stack (unobstructed): There are no obstructions to upward flow in or on the stack such as a rain cap.
B. vertical stack (obstructed): There are obstructions to the upward flow, such as a rain cap, which prevents or inhibits the air flow in a vertical direction.
C. non-vertical stack: The stack directs the air flow in a direction which is not directly upward.

Complete Table 7-B below for each fugitive emissions egress point. List each individual egress point on a separate line. Refer to the description of the fugitive egress point type codes below the table for use in completing the type code column of the table. For air contaminant sources like roadways and storage piles, only the first 5 columns need to be completed. For an air contaminant source with multiple fugitive emissions egress points, include only the primary egress points.

Table 7-B, Fugitive Egress Point Information

Company ID for the Egress Point (examples; Garage Door B, Building C; Roof Monitor; etc.)	Type Code*	Egress Point Description (examples: garage door, 12 X 30 feet, west wall; outside gravel storage piles; etc.)	Fugitive Egress Point Height from the Ground (ft)	Minimum Distance to the Property Line (ft)	Exit Gas Temp. (F)

*Type codes for fugitive egress point:

Section II - Specific Air Contaminant Source Information

D. door or window
E. other opening in the building without a duct
F. no stack and no building enclosing the air contaminant source (e.g., roadways)

Complete Table 7-C below for each Stack Egress Point identified in Table 7-A above. In each case, use the dimensions of the largest nearby building, building segment or structure. List each individual egress point on a separate line. Use the same Company Name or ID for the Egress Point in Table 7-C that was used in Table 7-A. See the line by line PTI instructions for additional information.

Table 7-C, Egress Point Additional Information (Add rows as necessary)

Company ID or Name for the Egress Point	Building Height (ft)	Building Width (ft)	Building Length (ft)
CMD STACK 3	225	70	250

8. Request for Federally Enforceable Limits

As part of this permit application, do you wish to propose voluntary restrictions to limit emissions in order to avoid specific requirements listed below, (i.e., are you requesting federally enforceable limits to obtain synthetic minor status)?

☐ yes
☒ no
☐ not sure - please contact me if this affects me

If yes, why are you requesting federally enforceable limits? Check all that apply.

a. ☐ to avoid being a major source (see OAC rule 3745-77-01)
b. ☐ to avoid being a major MACT source (see OAC rule 3745-31-01)
c. ☐ to avoid being a major modification (see OAC rule 3745-31-01)
d. ☐ to avoid being a major stationary source (see OAC rule 3745-31-01)
e. ☐ to avoid an air dispersion modeling requirement (see Engineering Guide # 69)
f. ☐ to avoid another requirement. Describe: _____

If you checked a., b. or d., please attach a facility-wide potential to emit (PTE) analysis (for each pollutant) and synthetic minor strategy to this application. (See line by line instructions for definition of PTE.) If you checked c., please attach a net emission change analysis to this application.

9. If this air contaminant source utilizes any continuous emissions monitoring equipment for indicating or demonstrating compliance, complete the following table. This does not include continuous parametric monitoring systems.

Company ID for Egress Point	Type of Monitor	Applicable performance specification (40 CFR 60, Appendix B)	Pollutant(s) Monitored
CMD STACK 3	SO_2 IN EXHAUST OR H_2S IN FUEL (TO BE DETERMINED)	SPECIFICATION 3 (SO_2) SPECIFICATION 7 (H_2S)	SO_2 H_2S

10. Do you wish to permit this air contaminant source as a portable source, allowing relocation within the state in accordance with OAC rule 3745-31-03 or OAC rule 3745-31-05?

☐ yes - Note: notification requirements in rules cited above must be followed.
☒ no

11. The appropriate Emissions Activity Category (EAC) form(s) must be completed and attached for each air contaminant source. At least one complete EAC form must be submitted for each air contaminant source for the application to be considered complete. Refer to the list attached to the PTI instructions.

Section II - Specific Air Contaminant Source Information

NOTE: One copy of this section should be filled out for each air contaminant source covered by this PTI application. See the line by line PTI instructions for additional information.

1. Company identification (name for air contaminant source for which you are applying): HOT GAS GENERATOR 4

2. List all equipment that are part of this air contaminant source: HOT GAS GENERATOR 4

3. Air Contaminant Source Installation or Modification Schedule (must be completed regardless of date of installation or modification):

   When did/will you begin to install or modify the air contaminant source? (month/year) SECOND QUARTER 2008

   When did/will you begin to operate the air contaminant source? (month/year) THIRD QUARTER 2011 **OR** after issuance of PTI _____

4. Emissions Information: The following table requests information needed to determine the applicable requirements and the compliance status of this air contaminant source with those requirements. Suggestions for how to estimate emissions may be found in the instructions to the Emissions Activity Category (EAC) forms required with this application. If you need further assistance, contact your Ohio EPA permit representative.

   - If total potential emissions of HAPs or any Air Toxic is greater than 1 ton/yr, fill in the table for that (those) pollutant(s). For all other pollutants, if "Emissions before controls (max), lb/hr" multiplied by 24 hours/day is greater than 10 lb/day, fill in the table for that pollutant.
   - If you have no add-on control equipment, "Emissions before controls= will be the same as "Actual emissions"
   - Annual emissions should be based on operating 8760 hr/yr unless you are requesting operating restrictions to limit emissions in line # 8 or have described inherent limitations below.
   - If you use units other than lb/hr or ton/yr, specify the units used (e.g., gr/dscf, lb/ton charged, lb/MMBtu, ton/12-months).
   - Requested Allowable (ton/yr) is often equivalent to Potential to Emit (PTE) as defined in OAC rule 3745-31-01 and OAC rule 3745-77-01.

Pollutant	Emissions before controls (max) (lb/hr)	Actual emissions (lb/hr)	Actual emissions (ton/year)	Requested Allowable (lb/hr)	Requested Allowable (ton/year)
Particulate emissions (PE) (formerly particulate matter, PM)	2.3	0.6	2.62	0.6	2.62
PM_{10} (PM < 10 microns in diameter)	2.3	0.6	2.62	0.6	2.62
Sulfur dioxide (SO_2)	0.94	0.24	1.06	0.24	1.06
Nitrogen oxides (NO_x)	10.2	1.32	5.8	1.32	5.8
Carbon monoxide (CO)	8.6	2.23	9.75	2.23	9.75
Organic compounds (OC)	0.56	0.15	0.64	0.15	0.64
Volatile organic compounds (VOC)	0.56	0.15	0.64	0.15	0.64
Total HAPs	0.2	0.05	0.22	0.05	0.22
Highest single HAP: (hexane)	0.18	0.048	0.21	0.048	0.21
Air Toxics (see instructions):	0.2	0.05	0.22	0.05	0.22

Provide your calculations as an attachment and explain how all process variables and emission factors were selected. Note the emissions factor(s) employed and document the origin. Example: AP-42, Table 4.4-3 (8/97); stack test, Method 5, 4/96; mass balance based on MSDS; etc.

Section II - Specific Air Contaminant Source Information

5. **Does this air contaminant source employ emissions control equipment?**

☒ **Yes** - fill out the applicable information below.

☐ **No** - proceed to item # 6.

Note: Pollutant abbreviations used below: Particulates = PE; Organic compounds = OC; Sulfur dioxide = SO_2; Nitrogen oxides = NOx; Carbon monoxide = CO

☐ **Cyclone/Multiclone**
Manufacturer: _____ Year installed: _____
What do you call this control equipment: _____
Pollutant(s) controlled: ☐ PE ☐ OC ☐ SO_2 ☐ NOx ☐ CO ☐ Other _____
Estimated capture efficiency (%): _____ Basis for efficiency: _____
Design control efficiency (%): _____ Basis for efficiency: _____
Type: ☐ Cyclone ☐ Multiclone ☐ Rotoclone ☐ Other _____
☐ This is the only control equipment on this air contaminant source
If no, this control equipment is: ☐ Primary ☐ Secondary ☐ Parallel
List any other air contaminant sources that are also vented to this control equipment:
_____

☒ **Fabric Filter/Baghouse**
Manufacturer: TO BE DETERMINED Year installed: NEW FACILITY
What do you call this control equipment: CMD BAGHOUSE 2
Pollutant(s) controlled: ☒ PE ☐ OC ☐ SO_2 ☐ NOx ☐ CO ☐ Other _____
Estimated capture efficiency (%):100 Basis for efficiency: ENGINEERING DESIGN
Design control efficiency (%):99.9 Basis for efficiency: LITERATURE
Operating pressure drop range (inches of water): Minimum: ____3____ Maximum: ___6___
Pressure type: ☐ Negative pressure ☒ Positive pressure
Fabric cleaning mechanism: ☐ Reverse air ☒ Pulse jet ☐ Shaker ☐ Other _____
☐ Lime injection or fabric coating agent used: Type: _____ Feed rate: _____
☒ This is the only control equipment on this air contaminant source
If no, this control equipment is: ☐ Primary ☐ Secondary ☐ Parallel
List any other air contaminant sources that are also vented to this control equipment:
_____

☐ **Wet Scrubber**
Manufacturer: _____ Year installed: _____
What do you call this control equipment: _____
Pollutant(s) controlled: ☐ PE ☐ OC ☐ SO_2 ☐ NOx ☐ CO ☐ Other _____
Estimated capture efficiency (%): _____ Basis for efficiency: _____
Design control efficiency (%): _____ Basis for efficiency: _____
Type: ☐ Spray chamber ☐ Packed bed ☐ Impingement ☐ Venturi ☐ Other _____
Operating pressure drop range (inches of water): Minimum: _____ Maximum: _____
pH range for scrubbing liquid: Minimum: _____ Maximum: _____
Scrubbing liquid flow rate (gal/min): _____
Is scrubber liquid recirculated? ☐ Yes ☐ No
Water supply pressure (psig): _____ NOTE: This item for spray chambers only.
☐ This is the only control equipment on this air contaminant source
If no, this control equipment is: ☐ Primary ☐ Secondary ☐ Parallel
List any other air contaminant sources that are also vented to this control equipment:
_____

☐ **Electrostatic Precipitator**
Manufacturer: _____ Year installed: _____
What do you call this control equipment: _____
Pollutant(s) controlled: ☐ PE ☐ OC ☐ SO_2 ☐ NOx ☐ CO ☐ Other _____
Estimated capture efficiency (%): _____ Basis for efficiency: _____
Design control efficiency (%): _____ Basis for efficiency: _____

Section II - Specific Air Contaminant Source Information

Type: ☐ Plate-wire ☐ Flat-plate ☐ Tubular ☐ Wet ☐ Other _____
Number of operating fields: _____

☐ This is the only control equipment on this air contaminant source
If no, this control equipment is: ☐ Primary ☐ Secondary ☐ Parallel
List any other air contaminant sources that are also vented to this control equipment:
_____

☐ **Concentrator**
Manufacturer: _____ Year installed: _____
What do you call this control equipment: _____
Pollutant(s) controlled: ☐ PE ☐ OC ☐ SO_2 ☐ NOx ☐ CO ☐ Other _____
Estimated capture efficiency (%):_____ Basis for efficiency: _____
Design regeneration cycle time (minutes): _____
Minimum desorption air stream temperature (°F): _____
Rotational rate (revolutions/hour): _____
☐ This is the only control equipment on this air contaminant source
If no, this control equipment is: ☐ Primary ☐ Secondary ☐ Parallel
List any other air contaminant sources that are also vented to this control equipment:
_____

☐ **Catalytic Incinerator**
Manufacturer: _____ Year installed: _____
What do you call this control equipment: _____
Pollutant(s) controlled: ☐ PE ☐ OC ☐ SO_2 ☐ NOx ☐ CO ☐ Other _____
Estimated capture efficiency (%):_____ Basis for efficiency: _____
Design control efficiency (%):_____ Basis for efficiency: _____
Minimum inlet gas temperature (°F): _____
Combustion chamber residence time (seconds): _____
Minimum temperature difference (°F) across catalyst during air contaminant source operation: _____
☐ This is the only control equipment on this air contaminant source
If no, this control equipment is: ☐ Primary ☐ Secondary ☐ Parallel
List any other air contaminant sources that are also vented to this control equipment:
_____

☐ **Thermal Incinerator/Thermal Oxidizer**
Manufacturer: _____ Year installed: _____
What do you call this control equipment: _____
Pollutant(s) controlled: ☐ PE ☐ OC ☐ SO_2 ☐ NOx ☐ CO ☐ Other _____
Estimated capture efficiency (%):_____ Basis for efficiency: _____
Design control efficiency (%):_____ Basis for efficiency: _____
Minimum operating temperature (°F) and location: _____ (See line by line instructions.)
Combustion chamber residence time (seconds): _____
☐ This is the only control equipment on this air contaminant source
If no, this control equipment is: ☐ Primary ☐ Secondary ☐ Parallel
List any other air contaminant sources that are also vented to this control equipment:
_____

☐ **Flare**
Manufacturer: _____ Year installed: _____
What do you call this control equipment: _____
Pollutant(s) controlled: ☐ PE ☐ OC ☐ SO_2 ☐ NOx ☐ CO ☐ Other _____
Estimated capture efficiency (%):_____ Basis for efficiency: _____
Design control efficiency (%):_____ Basis for efficiency: _____
Type: ☐ Enclosed ☐ Elevated (open)
Ignition device: ☐ Electric arc ☐ Pilot flame
Flame presence sensor: ☐ Yes ☐ No
☐ This is the only control equipment on this air contaminant source
If no, this control equipment is: ☐ Primary ☐ Secondary ☐ Parallel
List any other air contaminant sources that are also vented to this control equipment:

Section II - Specific Air Contaminant Source Information

☐ **Condenser**
Manufacturer: _____ Year installed: _____
What do you call this control equipment: _____
Pollutant(s) controlled: ☐ PE ☐ OC ☐ SO_2 ☐ NOx ☐ CO ☐ Other _____
Estimated capture efficiency (%):_____ Basis for efficiency: _____
Design control efficiency (%):_____ Basis for efficiency: _____

Type: ☐ Indirect contact ☐ Direct contact
Maximum exhaust gas temperature (°F) during air contaminant source operation: _____
Coolant type: _____
Design coolant temperature (°F): Minimum _____ Maximum _____
Design coolant flow rate (gpm): _____
☐ This is the only control equipment on this air contaminant source
If no, this control equipment is: ☐ Primary ☐ Secondary ☐ Parallel
List any other air contaminant sources that are also vented to this control equipment:
_____

☐ **Carbon Absorber**
Manufacturer: _____ Year installed: _____
What do you call this control equipment: _____
Pollutant(s) controlled: ☐ PE ☐ OC ☐ SO_2 ☐ NOx ☐ CO ☐ Other _____
Estimated capture efficiency (%):_____ Basis for efficiency: _____
Design control efficiency (%):_____ Basis for efficiency: _____
Type: ☐ On-site regenerative ☐ Disposable
Maximum design outlet organic compound concentration (ppmv): _____
Carbon replacement frequency or regeneration cycle time (specify units): _____
Maximum temperature of the carbon bed, after regeneration (including any cooling cycle): _____
☐ This is the only control equipment on this air contaminant source
If no, this control equipment is: ☐ Primary ☐ Secondary ☐ Parallel
List any other air contaminant sources that are also vented to this control equipment:
_____

☐ **Dry Scrubber**
Manufacturer: _____ Year installed: _____
What do you call this control equipment: _____
Pollutant(s) controlled: ☐ PE ☐ OC ☐ SO_2 ☐ NOx ☐ CO ☐ Other _____
Estimated capture efficiency (%):_____ Basis for efficiency: _____
Design control efficiency (%):_____ Basis for efficiency: _____
Reagent(s) used: Type: _____ Injection rate(s): _____
Operating pressure drop range (inches of water): Minimum: _____ Maximum: _____
☐ This is the only control equipment on this air contaminant source
If no, this control equipment is: ☐ Primary ☐ Secondary ☐ Parallel
List any other air contaminant sources that are also vented to this control equipment:
_____

☐ **Paint booth filter**
Type: ☐ Paper ☐ Fiberglass ☐ Water curtain ☐ Other _____
Design control efficiency (%):_____ Basis for efficiency: _____

☐ **Other**, describe _____
Manufacturer: _____ Year installed: _____
What do you call this control equipment: _____
Pollutant(s) controlled: ☐ PE ☐ OC ☐ SO_2 ☐ NOx ☐ CO ☐ Other
Estimated capture efficiency (%): _____ Basis for efficiency: _____

Design control efficiency (%):_____ Basis for efficiency: _____
☐ This is the only control equipment on this air contaminant source
If no, this control equipment is: ☐ Primary ☐ Secondary ☐ Parallel

Section II - Specific Air Contaminant Source Information

List any other air contaminant sources that are also vented to this control equipment:

_____

6. Attach a Process or Activity Flow Diagram to this application for each air contaminant source included in the application. The diagram should indicate their relationships to one another. See the line by line PTI instructions for additional information.

7. Emissions egress point(s) information: PTIs which allow total emissions in excess of the thresholds listed below will be subject to an air quality modeling analysis. This analysis is to assure that the impact from the requested project will not exceed Ohio=s Acceptable Incremental Impacts for criteria pollutants and/or Maximum Allowable Ground Level Concentrations (MAGLC) for air toxics. Permit requests that would have unacceptable impacts can not be approved as proposed. See the line by line PTI instructions for additional information.

   Complete the tables below if the requested allowable annual emission rate for this PTI exceeds any of the following:

   - Particulate Matter (PM10): 10 tons per year
   - Sulfur Dioxide (SO2): 25 tons per year
   - Nitrogen Oxides (NOx): 25 tons per year
   - Carbon Monoxide (CO): 100 tons per year
   - Air Toxic: 1 ton per year. An air toxic is any air pollutant for which the American Council of Governmental Industrial Hygienists (ACGIH) has established a Threshold Limit Value (TLV).

   Complete Table 7-A below for each stack emissions egress point. An egress point is a point at which emissions from an air contaminant source are released into the ambient (outside) air. List each individual egress point on a separate line.

Table 7-A, Stack Egress Point Information

Company Name or ID for the Egress Point (examples: Stack A; Boiler Stack; etc.)	Type Code*	Stack Egress Point Shape and Dimensions (in)(examples: round 10 inch ID; rectangular 14 X 16 inches; etc.)	Stack Egress Point Height from the Ground (ft)	Stack Temp. at Max. Capacity (F)	Stack Flow Rate at Max. Capacity (ACFM)	Minimum Distance to the Property Line (ft)
CMD STACK 4	V	Round: 38-inch ID	250	250	48,071	1,000

*Type codes for stack egress points:

A. vertical stack (unobstructed): There are no obstructions to upward flow in or on the stack such as a rain cap.
B. vertical stack (obstructed): There are obstructions to the upward flow, such as a rain cap, which prevents or inhibits the air flow in a vertical direction.
C. non-vertical stack: The stack directs the air flow in a direction which is not directly upward.

Complete Table 7-B below for each fugitive emissions egress point. List each individual egress point on a separate line. Refer to the description of the fugitive egress point type codes below the table for use in completing the type code column of the table. For air contaminant sources like roadways and storage piles, only the first 5 columns need to be completed. For an air contaminant source with multiple fugitive emissions egress points, include only the primary egress points.

Table 7-B, Fugitive Egress Point Information

Company ID for the Egress Point (examples; Garage Door B, Building C; Roof Monitor; etc.)	Type Code*	Egress Point Description (examples: garage door, 12 X 30 feet, west wall; outside gravel storage piles; etc.)	Fugitive Egress Point Height from the Ground (ft)	Minimum Distance to the Property Line (ft)	Exit Gas Temp. (F)

*Type codes for fugitive egress point:

Section II - Specific Air Contaminant Source Information

D. door or window
E. other opening in the building without a duct
F. no stack and no building enclosing the air contaminant source (e.g., roadways)

Complete Table 7-C below for each Stack Egress Point identified in Table 7-A above. In each case, use the dimensions of the largest nearby building, building segment or structure. List each individual egress point on a separate line. Use the same Company Name or ID for the Egress Point in Table 7-C that was used in Table 7-A. See the line by line PTI instructions for additional information.

Table 7-C, Egress Point Additional Information (Add rows as necessary)

Company ID or Name for the Egress Point	Building Height (ft)	Building Width (ft)	Building Length (ft)
CMD STACK 4	225	70	250

8. Request for Federally Enforceable Limits

As part of this permit application, do you wish to propose voluntary restrictions to limit emissions in order to avoid specific requirements listed below, (i.e., are you requesting federally enforceable limits to obtain synthetic minor status)?

☐ yes
☒ no
☐ not sure - please contact me if this affects me

If yes, why are you requesting federally enforceable limits? Check all that apply.

a. ☐ to avoid being a major source (see OAC rule 3745-77-01)
b. ☐ to avoid being a major MACT source (see OAC rule 3745-31-01)
c. ☐ to avoid being a major modification (see OAC rule 3745-31-01)
d. ☐ to avoid being a major stationary source (see OAC rule 3745-31-01)
e. ☐ to avoid an air dispersion modeling requirement (see Engineering Guide # 69)
f. ☐ to avoid another requirement. Describe: _____

If you checked a., b. or d., please attach a facility-wide potential to emit (PTE) analysis (for each pollutant) and synthetic minor strategy to this application. (See line by line instructions for definition of PTE.) If you checked c., please attach a net emission change analysis to this application.

9. If this air contaminant source utilizes any continuous emissions monitoring equipment for indicating or demonstrating compliance, complete the following table. This does not include continuous parametric monitoring systems.

Company ID for Egress Point	Type of Monitor	Applicable performance specification (40 CFR 60, Appendix B)	Pollutant(s) Monitored
CMD STACK 4	SO_2 IN EXHAUST OR H_2S IN FUEL (TO BE DETERMINED)	SPECIFICATION 3 (SO_2) SPECIFICATION 7 (H_2S)	SO_2 H_2S

10. Do you wish to permit this air contaminant source as a portable source, allowing relocation within the state in accordance with OAC rule 3745-31-03 or OAC rule 3745-31-05?

☐ yes - Note: notification requirements in rules cited above must be followed.
☒ no

11. The appropriate Emissions Activity Category (EAC) form(s) must be completed and attached for each air contaminant source. At least one complete EAC form must be submitted for each air contaminant source for the application to be considered complete. Refer to the list attached to the PTI instructions.

Section II - Specific Air Contaminant Source Information

NOTE: One copy of this section should be filled out for each air contaminant source covered by this PTI application. See the line by line PTI instructions for additional information.

1. Company identification (name for air contaminant source for which you are applying): HOT GAS GENERATOR 5

2. List all equipment that are part of this air contaminant source: HOT GAS GENERATOR 5

3. Air Contaminant Source Installation or Modification Schedule (must be completed regardless of date of installation or modification):

   When did/will you begin to install or modify the air contaminant source? (month/year) SECOND QUARTER 2008

   When did/will you begin to operate the air contaminant source? (month/year) THIRD QUARTER 2011 **OR** after issuance of PTI _____

4. Emissions Information: The following table requests information needed to determine the applicable requirements and the compliance status of this air contaminant source with those requirements. Suggestions for how to estimate emissions may be found in the instructions to the Emissions Activity Category (EAC) forms required with this application. If you need further assistance, contact your Ohio EPA permit representative.

   - If total potential emissions of HAPs or any Air Toxic is greater than 1 ton/yr, fill in the table for that (those) pollutant(s). For all other pollutants, if "Emissions before controls (max), lb/hr" multiplied by 24 hours/day is greater than 10 lb/day, fill in the table for that pollutant.
   - If you have no add-on control equipment, "Emissions before controls= will be the same as "Actual emissions"
   - Annual emissions should be based on operating 8760 hr/yr unless you are requesting operating restrictions to limit emissions in line # 8 or have described inherent limitations below.
   - If you use units other than lb/hr or ton/yr, specify the units used (e.g., gr/dscf, lb/ton charged, lb/MMBtu, ton/12-months).
   - Requested Allowable (ton/yr) is often equivalent to Potential to Emit (PTE) as defined in OAC rule 3745-31-01 and OAC rule 3745-77-01.

Pollutant	Emissions before controls (max) (lb/hr)	Actual emissions (lb/hr)	Actual emissions (ton/year)	Requested Allowable (lb/hr)	Requested Allowable (ton/year)
Particulate emissions (PE) (formerly particulate matter, PM)	2.3	0.6	2.62	0.6	2.62
PM_{10} (PM < 10 microns in diameter)	2.3	0.6	2.62	0.6	2.62
Sulfur dioxide (SO_2)	0.94	0.24	1.06	0.24	1.06
Nitrogen oxides (NO_x)	10.2	1.32	5.8	1.32	5.8
Carbon monoxide (CO)	8.6	2.23	9.75	2.23	9.75
Organic compounds (OC)	0.56	0.15	0.64	0.15	0.64
Volatile organic compounds (VOC)	0.56	0.15	0.64	0.15	0.64
Total HAPs	0.2	0.05	0.22	0.05	0.22
Highest single HAP: (hexane)	0.18	0.048	0.21	0.048	0.21
Air Toxics (see instructions):	0.2	0.05	0.22	0.05	0.22

Provide your calculations as an attachment and explain how all process variables and emission factors were selected. Note the emissions factor(s) employed and document the origin. Example: AP-42, Table 4.4-3 (8/97); stack test, Method 5, 4/96; mass balance based on MSDS; etc.

Section II - Specific Air Contaminant Source Information

5. **Does this air contaminant source employ emissions control equipment?**

☒ **Yes** - fill out the applicable information below.

☐ **No** - proceed to item # 6.

Note: Pollutant abbreviations used below: Particulates = PE; Organic compounds = OC; Sulfur dioxide = SO_2; Nitrogen oxides = NOx; Carbon monoxide = CO

☐ **Cyclone/Multiclone**
Manufacturer: _____ Year installed: _____
What do you call this control equipment: _____
Pollutant(s) controlled: ☐ PE ☐ OC ☐ SO_2 ☐ NOx ☐ CO ☐ Other _____
Estimated capture efficiency (%): _____ Basis for efficiency: _____
Design control efficiency (%): _____ Basis for efficiency: _____
Type: ☐ Cyclone ☐ Multiclone ☐ Rotoclone ☐ Other _____
☐ This is the only control equipment on this air contaminant source
If no, this control equipment is: ☐ Primary ☐ Secondary ☐ Parallel
List any other air contaminant sources that are also vented to this control equipment:
_____

☒ **Fabric Filter/Baghouse**
Manufacturer: TO BE DETERMINED Year installed: NEW FACILITY
What do you call this control equipment: CMD BAGHOUSE 2
Pollutant(s) controlled: ☒ PE ☐ OC ☐ SO_2 ☐ NOx ☐ CO ☐ Other _____
Estimated capture efficiency (%):100 Basis for efficiency: ENGINEERING DESIGN
Design control efficiency (%):99.9 Basis for efficiency: LITERATURE
Operating pressure drop range (inches of water): Minimum: ____3____ Maximum: ___6___
Pressure type: ☐ Negative pressure ☒ Positive pressure
Fabric cleaning mechanism: ☐ Reverse air ☒ Pulse jet ☐ Shaker ☐ Other _____
☐ Lime injection or fabric coating agent used: Type: _____ Feed rate: _____
☒ This is the only control equipment on this air contaminant source
If no, this control equipment is: ☐ Primary ☐ Secondary ☐ Parallel
List any other air contaminant sources that are also vented to this control equipment:
_____

☐ **Wet Scrubber**
Manufacturer: _____ Year installed: _____
What do you call this control equipment: _____
Pollutant(s) controlled: ☐ PE ☐ OC ☐ SO_2 ☐ NOx ☐ CO ☐ Other _____
Estimated capture efficiency (%): _____ Basis for efficiency: _____
Design control efficiency (%): _____ Basis for efficiency: _____
Type: ☐ Spray chamber ☐ Packed bed ☐ Impingement ☐ Venturi ☐ Other _____
Operating pressure drop range (inches of water): Minimum: _____ Maximum: _____
pH range for scrubbing liquid: Minimum: _____ Maximum: _____
Scrubbing liquid flow rate (gal/min): _____
Is scrubber liquid recirculated? ☐ Yes ☐ No
Water supply pressure (psig): _____ NOTE: This item for spray chambers only.
☐ This is the only control equipment on this air contaminant source
If no, this control equipment is: ☐ Primary ☐ Secondary ☐ Parallel
List any other air contaminant sources that are also vented to this control equipment:
_____

☐ **Electrostatic Precipitator**
Manufacturer: _____ Year installed: _____
What do you call this control equipment: _____
Pollutant(s) controlled: ☐ PE ☐ OC ☐ SO_2 ☐ NOx ☐ CO ☐ Other _____
Estimated capture efficiency (%): _____ Basis for efficiency: _____
Design control efficiency (%): _____ Basis for efficiency: _____

Section II - Specific Air Contaminant Source Information

Type: ☐ Plate-wire ☐ Flat-plate ☐ Tubular ☐ Wet ☐ Other _____
Number of operating fields: _____

☐ This is the only control equipment on this air contaminant source
If no, this control equipment is: ☐ Primary ☐ Secondary ☐ Parallel
List any other air contaminant sources that are also vented to this control equipment:
_____

☐ **Concentrator**
Manufacturer: _____ Year installed: _____
What do you call this control equipment: _____
Pollutant(s) controlled: ☐ PE ☐ OC ☐ SO_2 ☐ NOx ☐ CO ☐ Other _____
Estimated capture efficiency (%):_____ Basis for efficiency: _____
Design regeneration cycle time (minutes): _____
Minimum desorption air stream temperature (°F): _____
Rotational rate (revolutions/hour): _____
☐ This is the only control equipment on this air contaminant source
If no, this control equipment is: ☐ Primary ☐ Secondary ☐ Parallel
List any other air contaminant sources that are also vented to this control equipment:
_____

☐ **Catalytic Incinerator**
Manufacturer: _____ Year installed: _____
What do you call this control equipment: _____
Pollutant(s) controlled: ☐ PE ☐ OC ☐ SO_2 ☐ NOx ☐ CO ☐ Other _____
Estimated capture efficiency (%):_____ Basis for efficiency: _____
Design control efficiency (%):_____ Basis for efficiency: _____
Minimum inlet gas temperature (°F): _____
Combustion chamber residence time (seconds): _____
Minimum temperature difference (°F) across catalyst during air contaminant source operation: _____
☐ This is the only control equipment on this air contaminant source
If no, this control equipment is: ☐ Primary ☐ Secondary ☐ Parallel
List any other air contaminant sources that are also vented to this control equipment:
_____

☐ **Thermal Incinerator/Thermal Oxidizer**
Manufacturer: _____ Year installed: _____
What do you call this control equipment: _____
Pollutant(s) controlled: ☐ PE ☐ OC ☐ SO_2 ☐ NOx ☐ CO ☐ Other _____
Estimated capture efficiency (%):_____ Basis for efficiency: _____
Design control efficiency (%):_____ Basis for efficiency: _____
Minimum operating temperature (°F) and location: _____ (See line by line instructions.)
Combustion chamber residence time (seconds): _____
☐ This is the only control equipment on this air contaminant source
If no, this control equipment is: ☐ Primary ☐ Secondary ☐ Parallel
List any other air contaminant sources that are also vented to this control equipment:
_____

☐ **Flare**
Manufacturer: _____ Year installed: _____
What do you call this control equipment: _____
Pollutant(s) controlled: ☐ PE ☐ OC ☐ SO_2 ☐ NOx ☐ CO ☐ Other _____
Estimated capture efficiency (%):_____ Basis for efficiency: _____
Design control efficiency (%):_____ Basis for efficiency: _____
Type: ☐ Enclosed ☐ Elevated (open)
Ignition device: ☐ Electric arc ☐ Pilot flame
Flame presence sensor: ☐ Yes ☐ No
☐ This is the only control equipment on this air contaminant source
If no, this control equipment is: ☐ Primary ☐ Secondary ☐ Parallel
List any other air contaminant sources that are also vented to this control equipment:

Section II - Specific Air Contaminant Source Information

☐ **Condenser**
Manufacturer: _____ Year installed: _____
What do you call this control equipment: _____
Pollutant(s) controlled: ☐ PE ☐ OC ☐ SO_2 ☐ NOx ☐ CO ☐ Other _____
Estimated capture efficiency (%):_____ Basis for efficiency: _____
Design control efficiency (%):_____ Basis for efficiency: _____

Type: ☐ Indirect contact ☐ Direct contact
Maximum exhaust gas temperature (°F) during air contaminant source operation: _____
Coolant type: _____
Design coolant temperature (°F): Minimum _____ Maximum _____
Design coolant flow rate (gpm): _____
☐ This is the only control equipment on this air contaminant source
If no, this control equipment is: ☐ Primary ☐ Secondary ☐ Parallel
List any other air contaminant sources that are also vented to this control equipment:
_____

☐ **Carbon Absorber**
Manufacturer: _____ Year installed: _____
What do you call this control equipment: _____
Pollutant(s) controlled: ☐ PE ☐ OC ☐ SO_2 ☐ NOx ☐ CO ☐ Other _____
Estimated capture efficiency (%):_____ Basis for efficiency: _____
Design control efficiency (%):_____ Basis for efficiency: _____
Type: ☐ On-site regenerative ☐ Disposable
Maximum design outlet organic compound concentration (ppmv): _____
Carbon replacement frequency or regeneration cycle time (specify units): _____
Maximum temperature of the carbon bed, after regeneration (including any cooling cycle): _____
☐ This is the only control equipment on this air contaminant source
If no, this control equipment is: ☐ Primary ☐ Secondary ☐ Parallel
List any other air contaminant sources that are also vented to this control equipment:
_____

☐ **Dry Scrubber**
Manufacturer: _____ Year installed: _____
What do you call this control equipment: _____
Pollutant(s) controlled: ☐ PE ☐ OC ☐ SO_2 ☐ NOx ☐ CO ☐ Other _____
Estimated capture efficiency (%):_____ Basis for efficiency: _____
Design control efficiency (%):_____ Basis for efficiency: _____
Reagent(s) used: Type: _____ Injection rate(s): _____
Operating pressure drop range (inches of water): Minimum: _____ Maximum: _____
☐ This is the only control equipment on this air contaminant source
If no, this control equipment is: ☐ Primary ☐ Secondary ☐ Parallel
List any other air contaminant sources that are also vented to this control equipment:
_____

☐ **Paint booth filter**
Type: ☐ Paper ☐ Fiberglass ☐ Water curtain ☐ Other _____
Design control efficiency (%):_____ Basis for efficiency: _____

☐ **Other**, describe _____
Manufacturer: _____ Year installed: _____
What do you call this control equipment: _____
Pollutant(s) controlled: ☐ PE ☐ OC ☐ SO_2 ☐ NOx ☐ CO ☐ Other
Estimated capture efficiency (%): _____ Basis for efficiency: _____

Design control efficiency (%):_____ Basis for efficiency: _____
☐ This is the only control equipment on this air contaminant source
If no, this control equipment is: ☐ Primary ☐ Secondary ☐ Parallel

Section II - Specific Air Contaminant Source Information

List any other air contaminant sources that are also vented to this control equipment:

_____

6. Attach a Process or Activity Flow Diagram to this application for each air contaminant source included in the application. The diagram should indicate their relationships to one another. See the line by line PTI instructions for additional information.

7. Emissions egress point(s) information: PTIs which allow total emissions in excess of the thresholds listed below will be subject to an air quality modeling analysis. This analysis is to assure that the impact from the requested project will not exceed Ohio=s Acceptable Incremental Impacts for criteria pollutants and/or Maximum Allowable Ground Level Concentrations (MAGLC) for air toxics. Permit requests that would have unacceptable impacts can not be approved as proposed. See the line by line PTI instructions for additional information.

   Complete the tables below if the requested allowable annual emission rate for this PTI exceeds any of the following:

   - Particulate Matter (PM10): 10 tons per year
   - Sulfur Dioxide (SO2): 25 tons per year
   - Nitrogen Oxides (NOx): 25 tons per year
   - Carbon Monoxide (CO): 100 tons per year
   - Air Toxic: 1 ton per year. An air toxic is any air pollutant for which the American Council of Governmental Industrial Hygienists (ACGIH) has established a Threshold Limit Value (TLV).

   Complete Table 7-A below for each stack emissions egress point. An egress point is a point at which emissions from an air contaminant source are released into the ambient (outside) air. List each individual egress point on a separate line.

Table 7-A, Stack Egress Point Information

Company Name or ID for the Egress Point (examples: Stack A; Boiler Stack; etc.)	Type Code*	Stack Egress Point Shape and Dimensions (in)(examples: round 10 inch ID; rectangular 14 X 16 inches; etc.)	Stack Egress Point Height from the Ground (ft)	Stack Temp. at Max. Capacity (F)	Stack Flow Rate at Max. Capacity (ACFM)	Minimum Distance to the Property Line (ft)
CMD STACK 5	V	Round: 38-inch ID	250	250	48,071	1,000

*Type codes for stack egress points:

A. vertical stack (unobstructed): There are no obstructions to upward flow in or on the stack such as a rain cap.
B. vertical stack (obstructed): There are obstructions to the upward flow, such as a rain cap, which prevents or inhibits the air flow in a vertical direction.
C. non-vertical stack: The stack directs the air flow in a direction which is not directly upward.

Complete Table 7-B below for each fugitive emissions egress point. List each individual egress point on a separate line. Refer to the description of the fugitive egress point type codes below the table for use in completing the type code column of the table. For air contaminant sources like roadways and storage piles, only the first 5 columns need to be completed. For an air contaminant source with multiple fugitive emissions egress points, include only the primary egress points.

Table 7-B, Fugitive Egress Point Information

Company ID for the Egress Point (examples; Garage Door B, Building C; Roof Monitor; etc.)	Type Code*	Egress Point Description (examples: garage door, 12 X 30 feet, west wall; outside gravel storage piles; etc.)	Fugitive Egress Point Height from the Ground (ft)	Minimum Distance to the Property Line (ft)	Exit Gas Temp. (F)

*Type codes for fugitive egress point:

Section II - Specific Air Contaminant Source Information

D. door or window
E. other opening in the building without a duct
F. no stack and no building enclosing the air contaminant source (e.g., roadways)

Complete Table 7-C below for each Stack Egress Point identified in Table 7-A above. In each case, use the dimensions of the largest nearby building, building segment or structure. List each individual egress point on a separate line. Use the same Company Name or ID for the Egress Point in Table 7-C that was used in Table 7-A. See the line by line PTI instructions for additional information.

Table 7-C, Egress Point Additional Information (Add rows as necessary)

Company ID or Name for the Egress Point	Building Height (ft)	Building Width (ft)	Building Length (ft)
CMD STACK 5	225	70	250

8. Request for Federally Enforceable Limits

As part of this permit application, do you wish to propose voluntary restrictions to limit emissions in order to avoid specific requirements listed below, (i.e., are you requesting federally enforceable limits to obtain synthetic minor status)?

☐ yes
☒ no
☐ not sure - please contact me if this affects me

If yes, why are you requesting federally enforceable limits? Check all that apply.

a. ☐ to avoid being a major source (see OAC rule 3745-77-01)
b. ☐ to avoid being a major MACT source (see OAC rule 3745-31-01)
c. ☐ to avoid being a major modification (see OAC rule 3745-31-01)
d. ☐ to avoid being a major stationary source (see OAC rule 3745-31-01)
e. ☐ to avoid an air dispersion modeling requirement (see Engineering Guide # 69)
f. ☐ to avoid another requirement. Describe: _____

If you checked a., b. or d., please attach a facility-wide potential to emit (PTE) analysis (for each pollutant) and synthetic minor strategy to this application. (See line by line instructions for definition of PTE.) If you checked c., please attach a net emission change analysis to this application.

9. If this air contaminant source utilizes any continuous emissions monitoring equipment for indicating or demonstrating compliance, complete the following table. This does not include continuous parametric monitoring systems.

Company ID for Egress Point	Type of Monitor	Applicable performance specification (40 CFR 60, Appendix B)	Pollutant(s) Monitored
CMD STACK 5	SO_2 IN EXHAUST OR H_2S IN FUEL (TO BE DETERMINED)	SPECIFICATION 3 (SO_2) SPECIFICATION 7 (H_2S)	SO_2 H_2S

10. Do you wish to permit this air contaminant source as a portable source, allowing relocation within the state in accordance with OAC rule 3745-31-03 or OAC rule 3745-31-05?

☐ yes - Note: notification requirements in rules cited above must be followed.
☒ no

11. The appropriate Emissions Activity Category (EAC) form(s) must be completed and attached for each air contaminant source. At least one complete EAC form must be submitted for each air contaminant source for the application to be considered complete. Refer to the list attached to the PTI instructions.

Section II - Specific Air Contaminant Source Information

NOTE: One copy of this section should be filled out for each air contaminant source covered by this PTI application. See the line by line PTI instructions for additional information.

1. Company identification (name for air contaminant source for which you are applying): HOT GAS GENERATOR 6

2. List all equipment that are part of this air contaminant source: HOT GAS GENERATOR 6

3. Air Contaminant Source Installation or Modification Schedule (must be completed regardless of date of installation or modification):

   When did/will you begin to install or modify the air contaminant source? (month/year) SECOND QUARTER 2008

   When did/will you begin to operate the air contaminant source? (month/year) THIRD QUARTER 2011 **OR** after issuance of PTI _____

4. Emissions Information: The following table requests information needed to determine the applicable requirements and the compliance status of this air contaminant source with those requirements. Suggestions for how to estimate emissions may be found in the instructions to the Emissions Activity Category (EAC) forms required with this application. If you need further assistance, contact your Ohio EPA permit representative.

   - If total potential emissions of HAPs or any Air Toxic is greater than 1 ton/yr, fill in the table for that (those) pollutant(s). For all other pollutants, if "Emissions before controls (max), lb/hr" multiplied by 24 hours/day is greater than 10 lb/day, fill in the table for that pollutant.
   - If you have no add-on control equipment, "Emissions before controls= will be the same as "Actual emissions"
   - Annual emissions should be based on operating 8760 hr/yr unless you are requesting operating restrictions to limit emissions in line # 8 or have described inherent limitations below.
   - If you use units other than lb/hr or ton/yr, specify the units used (e.g., gr/dscf, lb/ton charged, lb/MMBtu, ton/12-months).
   - Requested Allowable (ton/yr) is often equivalent to Potential to Emit (PTE) as defined in OAC rule 3745-31-01 and OAC rule 3745-77-01.

Pollutant	Emissions before controls (max) (lb/hr)	Actual emissions (lb/hr)	Actual emissions (ton/year)	Requested Allowable (lb/hr)	Requested Allowable (ton/year)
Particulate emissions (PE) (formerly particulate matter, PM)	2.3	0.6	2.62	0.6	2.62
PM_{10} (PM < 10 microns in diameter)	2.3	0.6	2.62	0.6	2.62
Sulfur dioxide (SO_2)	0.94	0.24	1.06	0.24	1.06
Nitrogen oxides (NO_x)	10.2	1.32	5.8	1.32	5.8
Carbon monoxide (CO)	8.6	2.23	9.75	2.23	9.75
Organic compounds (OC)	0.56	0.15	0.64	0.15	0.64
Volatile organic compounds (VOC)	0.56	0.15	0.64	0.15	0.64
Total HAPs	0.2	0.05	0.22	0.05	0.22
Highest single HAP: (hexane)	0.18	0.048	0.21	0.048	0.21
Air Toxics (see instructions):	0.2	0.05	0.22	0.05	0.22

Provide your calculations as an attachment and explain how all process variables and emission factors were selected. Note the emissions factor(s) employed and document the origin. Example: AP-42, Table 4.4-3 (8/97); stack test, Method 5, 4/96; mass balance based on MSDS; etc.

Section II - Specific Air Contaminant Source Information

5. **Does this air contaminant source employ emissions control equipment?**

☒ **Yes** - fill out the applicable information below.

☐ **No** - proceed to item # 6.

Note: Pollutant abbreviations used below: Particulates = PE; Organic compounds = OC; Sulfur dioxide = SO_2; Nitrogen oxides = NOx; Carbon monoxide = CO

☐ **Cyclone/Multiclone**

Manufacturer: _____ Year installed: _____
What do you call this control equipment: _____
Pollutant(s) controlled: ☐ PE ☐ OC ☐ SO_2 ☐ NOx ☐ CO ☐ Other _____
Estimated capture efficiency (%): _____ Basis for efficiency: _____
Design control efficiency (%): _____ Basis for efficiency: _____
Type: ☐ Cyclone ☐ Multiclone ☐ Rotoclone ☐ Other _____
☐ This is the only control equipment on this air contaminant source
If no, this control equipment is: ☐ Primary ☐ Secondary ☐ Parallel
List any other air contaminant sources that are also vented to this control equipment:
_____

☒ **Fabric Filter/Baghouse**

Manufacturer: TO BE DETERMINED Year installed: NEW FACILITY
What do you call this control equipment: CMD BAGHOUSE 2
Pollutant(s) controlled: ☒ PE ☐ OC ☐ SO_2 ☐ NOx ☐ CO ☐ Other _____
Estimated capture efficiency (%):100 Basis for efficiency: ENGINEERING DESIGN
Design control efficiency (%):99.9 Basis for efficiency: LITERATURE
Operating pressure drop range (inches of water): Minimum: ____3____ Maximum: ___6___
Pressure type: ☐ Negative pressure ☒ Positive pressure
Fabric cleaning mechanism: ☐ Reverse air ☒ Pulse jet ☐ Shaker ☐ Other _____
☐ Lime injection or fabric coating agent used: Type: _____ Feed rate: _____
☒ This is the only control equipment on this air contaminant source
If no, this control equipment is: ☐ Primary ☐ Secondary ☐ Parallel
List any other air contaminant sources that are also vented to this control equipment:
_____

☐ **Wet Scrubber**

Manufacturer: _____ Year installed: _____
What do you call this control equipment: _____
Pollutant(s) controlled: ☐ PE ☐ OC ☐ SO_2 ☐ NOx ☐ CO ☐ Other _____
Estimated capture efficiency (%): _____ Basis for efficiency: _____
Design control efficiency (%): _____ Basis for efficiency: _____
Type: ☐ Spray chamber ☐ Packed bed ☐ Impingement ☐ Venturi ☐ Other _____
Operating pressure drop range (inches of water): Minimum: _____ Maximum: _____
pH range for scrubbing liquid: Minimum: _____ Maximum: _____
Scrubbing liquid flow rate (gal/min): _____
Is scrubber liquid recirculated? ☐ Yes ☐ No
Water supply pressure (psig): _____ NOTE: This item for spray chambers only.
☐ This is the only control equipment on this air contaminant source
If no, this control equipment is: ☐ Primary ☐ Secondary ☐ Parallel
List any other air contaminant sources that are also vented to this control equipment:
_____

☐ **Electrostatic Precipitator**

Manufacturer: _____ Year installed: _____
What do you call this control equipment: _____
Pollutant(s) controlled: ☐ PE ☐ OC ☐ SO_2 ☐ NOx ☐ CO ☐ Other _____
Estimated capture efficiency (%): _____ Basis for efficiency: _____
Design control efficiency (%): _____ Basis for efficiency: _____

Section II - Specific Air Contaminant Source Information

Type: ☐ Plate-wire ☐ Flat-plate ☐ Tubular ☐ Wet ☐ Other _____
Number of operating fields: _____

☐ This is the only control equipment on this air contaminant source
If no, this control equipment is: ☐ Primary ☐ Secondary ☐ Parallel
List any other air contaminant sources that are also vented to this control equipment:
_____

☐ **Concentrator**
Manufacturer: _____ Year installed: _____
What do you call this control equipment: _____
Pollutant(s) controlled: ☐ PE ☐ OC ☐ SO_2 ☐ NOx ☐ CO ☐ Other _____
Estimated capture efficiency (%):_____ Basis for efficiency: _____
Design regeneration cycle time (minutes): _____
Minimum desorption air stream temperature (°F): _____
Rotational rate (revolutions/hour): _____
☐ This is the only control equipment on this air contaminant source
If no, this control equipment is: ☐ Primary ☐ Secondary ☐ Parallel
List any other air contaminant sources that are also vented to this control equipment:
_____

☐ **Catalytic Incinerator**
Manufacturer: _____ Year installed: _____
What do you call this control equipment: _____
Pollutant(s) controlled: ☐ PE ☐ OC ☐ SO_2 ☐ NOx ☐ CO ☐ Other _____
Estimated capture efficiency (%):_____ Basis for efficiency: _____
Design control efficiency (%):_____ Basis for efficiency: _____
Minimum inlet gas temperature (°F): _____
Combustion chamber residence time (seconds): _____
Minimum temperature difference (°F) across catalyst during air contaminant source operation: _____
☐ This is the only control equipment on this air contaminant source
If no, this control equipment is: ☐ Primary ☐ Secondary ☐ Parallel
List any other air contaminant sources that are also vented to this control equipment:
_____

☐ **Thermal Incinerator/Thermal Oxidizer**
Manufacturer: _____ Year installed: _____
What do you call this control equipment: _____
Pollutant(s) controlled: ☐ PE ☐ OC ☐ SO_2 ☐ NOx ☐ CO ☐ Other _____
Estimated capture efficiency (%):_____ Basis for efficiency: _____
Design control efficiency (%):_____ Basis for efficiency: _____
Minimum operating temperature (°F) and location: _____ (See line by line instructions.)
Combustion chamber residence time (seconds): _____
☐ This is the only control equipment on this air contaminant source
If no, this control equipment is: ☐ Primary ☐ Secondary ☐ Parallel
List any other air contaminant sources that are also vented to this control equipment:
_____

☐ **Flare**
Manufacturer: _____ Year installed: _____
What do you call this control equipment: _____
Pollutant(s) controlled: ☐ PE ☐ OC ☐ SO_2 ☐ NOx ☐ CO ☐ Other _____
Estimated capture efficiency (%):_____ Basis for efficiency: _____
Design control efficiency (%):_____ Basis for efficiency: _____
Type: ☐ Enclosed ☐ Elevated (open)
Ignition device: ☐ Electric arc ☐ Pilot flame
Flame presence sensor: ☐ Yes ☐ No
☐ This is the only control equipment on this air contaminant source
If no, this control equipment is: ☐ Primary ☐ Secondary ☐ Parallel
List any other air contaminant sources that are also vented to this control equipment:

Section II - Specific Air Contaminant Source Information

☐ **Condenser**
Manufacturer: _____ Year installed: _____
What do you call this control equipment: _____
Pollutant(s) controlled: ☐ PE ☐ OC ☐ SO_2 ☐ NOx ☐ CO ☐ Other _____
Estimated capture efficiency (%):_____ Basis for efficiency: _____
Design control efficiency (%):_____ Basis for efficiency: _____

Type: ☐ Indirect contact ☐ Direct contact
Maximum exhaust gas temperature (°F) during air contaminant source operation: _____
Coolant type: _____
Design coolant temperature (°F): Minimum _____ Maximum _____
Design coolant flow rate (gpm): _____
☐ This is the only control equipment on this air contaminant source
If no, this control equipment is: ☐ Primary ☐ Secondary ☐ Parallel
List any other air contaminant sources that are also vented to this control equipment:
_____

☐ **Carbon Absorber**
Manufacturer: _____ Year installed: _____
What do you call this control equipment: _____
Pollutant(s) controlled: ☐ PE ☐ OC ☐ SO_2 ☐ NOx ☐ CO ☐ Other _____
Estimated capture efficiency (%):_____ Basis for efficiency: _____
Design control efficiency (%):_____ Basis for efficiency: _____
Type: ☐ On-site regenerative ☐ Disposable
Maximum design outlet organic compound concentration (ppmv): _____
Carbon replacement frequency or regeneration cycle time (specify units): _____
Maximum temperature of the carbon bed, after regeneration (including any cooling cycle): _____
☐ This is the only control equipment on this air contaminant source
If no, this control equipment is: ☐ Primary ☐ Secondary ☐ Parallel
List any other air contaminant sources that are also vented to this control equipment:
_____

☐ **Dry Scrubber**
Manufacturer: _____ Year installed: _____
What do you call this control equipment: _____
Pollutant(s) controlled: ☐ PE ☐ OC ☐ SO_2 ☐ NOx ☐ CO ☐ Other _____
Estimated capture efficiency (%):_____ Basis for efficiency: _____
Design control efficiency (%):_____ Basis for efficiency: _____
Reagent(s) used: Type: _____ Injection rate(s): _____
Operating pressure drop range (inches of water): Minimum: _____ Maximum: _____
☐ This is the only control equipment on this air contaminant source
If no, this control equipment is: ☐ Primary ☐ Secondary ☐ Parallel
List any other air contaminant sources that are also vented to this control equipment:
_____

☐ **Paint booth filter**
Type: ☐ Paper ☐ Fiberglass ☐ Water curtain ☐ Other _____
Design control efficiency (%):_____ Basis for efficiency: _____

☐ **Other**, describe _____
Manufacturer: _____ Year installed: _____
What do you call this control equipment: _____
Pollutant(s) controlled: ☐ PE ☐ OC ☐ SO_2 ☐ NOx ☐ CO ☐ Other
Estimated capture efficiency (%): _____ Basis for efficiency: _____

Design control efficiency (%):_____ Basis for efficiency: _____
☐ This is the only control equipment on this air contaminant source
If no, this control equipment is: ☐ Primary ☐ Secondary ☐ Parallel

Section II - Specific Air Contaminant Source Information

List any other air contaminant sources that are also vented to this control equipment:

6. Attach a Process or Activity Flow Diagram to this application for each air contaminant source included in the application. The diagram should indicate their relationships to one another. See the line by line PTI instructions for additional information.

7. Emissions egress point(s) information: PTIs which allow total emissions in excess of the thresholds listed below will be subject to an air quality modeling analysis. This analysis is to assure that the impact from the requested project will not exceed Ohio=s Acceptable Incremental Impacts for criteria pollutants and/or Maximum Allowable Ground Level Concentrations (MAGLC) for air toxics. Permit requests that would have unacceptable impacts can not be approved as proposed. See the line by line PTI instructions for additional information.

   Complete the tables below if the requested allowable annual emission rate for this PTI exceeds any of the following:

   - Particulate Matter (PM10): 10 tons per year
   - Sulfur Dioxide (SO2): 25 tons per year
   - Nitrogen Oxides (NOx): 25 tons per year
   - Carbon Monoxide (CO): 100 tons per year
   - Air Toxic: 1 ton per year. An air toxic is any air pollutant for which the American Council of Governmental Industrial Hygienists (ACGIH) has established a Threshold Limit Value (TLV).

   Complete Table 7-A below for each stack emissions egress point. An egress point is a point at which emissions from an air contaminant source are released into the ambient (outside) air. List each individual egress point on a separate line.

Table 7-A, Stack Egress Point Information

Company Name or ID for the Egress Point (examples: Stack A; Boiler Stack; etc.)	Type Code*	Stack Egress Point Shape and Dimensions (in)(examples: round 10 inch ID; rectangular 14 X 16 inches; etc.)	Stack Egress Point Height from the Ground (ft)	Stack Temp. at Max. Capacity (F)	Stack Flow Rate at Max. Capacity (ACFM)	Minimum Distance to the Property Line (ft)
CMD STACK 6	V	Round: 38-inch ID	250	250	48,071	1,000

*Type codes for stack egress points:

A. vertical stack (unobstructed): There are no obstructions to upward flow in or on the stack such as a rain cap.
B. vertical stack (obstructed): There are obstructions to the upward flow, such as a rain cap, which prevents or inhibits the air flow in a vertical direction.
C. non-vertical stack: The stack directs the air flow in a direction which is not directly upward.

Complete Table 7-B below for each fugitive emissions egress point. List each individual egress point on a separate line. Refer to the description of the fugitive egress point type codes below the table for use in completing the type code column of the table. For air contaminant sources like roadways and storage piles, only the first 5 columns need to be completed. For an air contaminant source with multiple fugitive emissions egress points, include only the primary egress points.

Table 7-B, Fugitive Egress Point Information

Company ID for the Egress Point (examples; Garage Door B, Building C; Roof Monitor; etc.)	Type Code*	Egress Point Description (examples: garage door, 12 X 30 feet, west wall; outside gravel storage piles; etc.)	Fugitive Egress Point Height from the Ground (ft)	Minimum Distance to the Property Line (ft)	Exit Gas Temp. (F)

*Type codes for fugitive egress point:

Section II - Specific Air Contaminant Source Information

D. door or window
E. other opening in the building without a duct
F. no stack and no building enclosing the air contaminant source (e.g., roadways)

Complete Table 7-C below for each Stack Egress Point identified in Table 7-A above. In each case, use the dimensions of the largest nearby building, building segment or structure. List each individual egress point on a separate line. Use the same Company Name or ID for the Egress Point in Table 7-C that was used in Table 7-A. See the line by line PTI instructions for additional information.

Table 7-C, Egress Point Additional Information (Add rows as necessary)

Company ID or Name for the Egress Point	Building Height (ft)	Building Width (ft)	Building Length (ft)
CMD STACK 6	225	70	250

8. Request for Federally Enforceable Limits

As part of this permit application, do you wish to propose voluntary restrictions to limit emissions in order to avoid specific requirements listed below, (i.e., are you requesting federally enforceable limits to obtain synthetic minor status)?

☐ yes
☒ no
☐ not sure - please contact me if this affects me

If yes, why are you requesting federally enforceable limits? Check all that apply.

a. ☐ to avoid being a major source (see OAC rule 3745-77-01)
b. ☐ to avoid being a major MACT source (see OAC rule 3745-31-01)
c. ☐ to avoid being a major modification (see OAC rule 3745-31-01)
d. ☐ to avoid being a major stationary source (see OAC rule 3745-31-01)
e. ☐ to avoid an air dispersion modeling requirement (see Engineering Guide # 69)
f. ☐ to avoid another requirement. Describe: _____

If you checked a., b. or d., please attach a facility-wide potential to emit (PTE) analysis (for each pollutant) and synthetic minor strategy to this application. (See line by line instructions for definition of PTE.) If you checked c., please attach a net emission change analysis to this application.

9. If this air contaminant source utilizes any continuous emissions monitoring equipment for indicating or demonstrating compliance, complete the following table. This does not include continuous parametric monitoring systems.

Company ID for Egress Point	Type of Monitor	Applicable performance specification (40 CFR 60, Appendix B)	Pollutant(s) Monitored
CMD STACK 6	SO_2 IN EXHAUST OR H_2S IN FUEL (TO BE DETERMINED)	SPECIFICATION 3 (SO_2) SPECIFICATION 7 (H_2S)	SO_2 H_2S

10. Do you wish to permit this air contaminant source as a portable source, allowing relocation within the state in accordance with OAC rule 3745-31-03 or OAC rule 3745-31-05?

☐ yes - Note: notification requirements in rules cited above must be followed.
☒ no

11. The appropriate Emissions Activity Category (EAC) form(s) must be completed and attached for each air contaminant source. At least one complete EAC form must be submitted for each air contaminant source for the application to be considered complete. Refer to the list attached to the PTI instructions.

Section II - Specific Air Contaminant Source Information

NOTE: One copy of this section should be filled out for each air contaminant source covered by this PTI application. See the line by line PTI instructions for additional information.

1. Company identification (name for air contaminant source for which you are applying): HOT GAS GENERATOR 7

2. List all equipment that are part of this air contaminant source: HOT GAS GENERATOR 7

3. Air Contaminant Source Installation or Modification Schedule (must be completed regardless of date of installation or modification):

   When did/will you begin to install or modify the air contaminant source? (month/year) SECOND QUARTER 2008

   When did/will you begin to operate the air contaminant source? (month/year) THIRD QUARTER 2011 **OR** after issuance of PTI _____

4. Emissions Information: The following table requests information needed to determine the applicable requirements and the compliance status of this air contaminant source with those requirements. Suggestions for how to estimate emissions may be found in the instructions to the Emissions Activity Category (EAC) forms required with this application. If you need further assistance, contact your Ohio EPA permit representative.

   - If total potential emissions of HAPs or any Air Toxic is greater than 1 ton/yr, fill in the table for that (those) pollutant(s). For all other pollutants, if "Emissions before controls (max), lb/hr" multiplied by 24 hours/day is greater than 10 lb/day, fill in the table for that pollutant.
   - If you have no add-on control equipment, "Emissions before controls= will be the same as "Actual emissions"
   - Annual emissions should be based on operating 8760 hr/yr unless you are requesting operating restrictions to limit emissions in line # 8 or have described inherent limitations below.
   - If you use units other than lb/hr or ton/yr, specify the units used (e.g., gr/dscf, lb/ton charged, lb/MMBtu, ton/12-months).
   - Requested Allowable (ton/yr) is often equivalent to Potential to Emit (PTE) as defined in OAC rule 3745-31-01 and OAC rule 3745-77-01.

Pollutant	Emissions before controls (max) (lb/hr)	Actual emissions (lb/hr)	Actual emissions (ton/year)	Requested Allowable (lb/hr)	Requested Allowable (ton/year)
Particulate emissions (PE) (formerly particulate matter, PM)	2.3	0.6	2.62	0.6	2.62
PM_{10} (PM < 10 microns in diameter)	2.3	0.6	2.62	0.6	2.62
Sulfur dioxide (SO_2)	0.94	0.24	1.06	0.24	1.06
Nitrogen oxides (NO_x)	10.2	1.32	5.8	1.32	5.8
Carbon monoxide (CO)	8.6	2.23	9.75	2.23	9.75
Organic compounds (OC)	0.56	0.15	0.64	0.15	0.64
Volatile organic compounds (VOC)	0.56	0.15	0.64	0.15	0.64
Total HAPs	0.2	0.05	0.22	0.05	0.22
Highest single HAP: (hexane)	0.18	0.048	0.21	0.048	0.21
Air Toxics (see instructions):	0.2	0.05	0.22	0.05	0.22

Provide your calculations as an attachment and explain how all process variables and emission factors were selected. Note the emissions factor(s) employed and document the origin. Example: AP-42, Table 4.4-3 (8/97); stack test, Method 5, 4/96; mass balance based on MSDS; etc.

Section II - Specific Air Contaminant Source Information

5. **Does this air contaminant source employ emissions control equipment?**

☒ **Yes** - fill out the applicable information below.

☐ **No** - proceed to item # 6.

Note: Pollutant abbreviations used below: Particulates = PE; Organic compounds = OC; Sulfur dioxide = SO_2; Nitrogen oxides = NOx; Carbon monoxide = CO

☐ **Cyclone/Multiclone**

Manufacturer: _____ Year installed: _____
What do you call this control equipment: _____
Pollutant(s) controlled: ☐ PE ☐ OC ☐ SO_2 ☐ NOx ☐ CO ☐ Other _____
Estimated capture efficiency (%): _____ Basis for efficiency: _____
Design control efficiency (%): _____ Basis for efficiency: _____
Type: ☐ Cyclone ☐ Multiclone ☐ Rotoclone ☐ Other _____
☐ This is the only control equipment on this air contaminant source
If no, this control equipment is: ☐ Primary ☐ Secondary ☐ Parallel
List any other air contaminant sources that are also vented to this control equipment:
_____

☒ **Fabric Filter/Baghouse**

Manufacturer: TO BE DETERMINED Year installed: NEW FACILITY
What do you call this control equipment: CMD BAGHOUSE 2
Pollutant(s) controlled: ☒ PE ☐ OC ☐ SO_2 ☐ NOx ☐ CO ☐ Other _____
Estimated capture efficiency (%):100 Basis for efficiency: ENGINEERING DESIGN
Design control efficiency (%):99.9 Basis for efficiency: LITERATURE
Operating pressure drop range (inches of water): Minimum: ___3___ Maximum: ___6___
Pressure type: ☐ Negative pressure ☒ Positive pressure
Fabric cleaning mechanism: ☐ Reverse air ☒ Pulse jet ☐ Shaker ☐ Other _____
☐ Lime injection or fabric coating agent used: Type: _____ Feed rate: _____
☒ This is the only control equipment on this air contaminant source
If no, this control equipment is: ☐ Primary ☐ Secondary ☐ Parallel
List any other air contaminant sources that are also vented to this control equipment:
_____

☐ **Wet Scrubber**

Manufacturer: _____ Year installed: _____
What do you call this control equipment: _____
Pollutant(s) controlled: ☐ PE ☐ OC ☐ SO_2 ☐ NOx ☐ CO ☐ Other _____
Estimated capture efficiency (%): _____ Basis for efficiency: _____
Design control efficiency (%): _____ Basis for efficiency: _____
Type: ☐ Spray chamber ☐ Packed bed ☐ Impingement ☐ Venturi ☐ Other _____
Operating pressure drop range (inches of water): Minimum: _____ Maximum: _____
pH range for scrubbing liquid: Minimum: _____ Maximum: _____
Scrubbing liquid flow rate (gal/min): _____
Is scrubber liquid recirculated? ☐ Yes ☐ No
Water supply pressure (psig): _____ NOTE: This item for spray chambers only.
☐ This is the only control equipment on this air contaminant source
If no, this control equipment is: ☐ Primary ☐ Secondary ☐ Parallel
List any other air contaminant sources that are also vented to this control equipment:
_____

☐ **Electrostatic Precipitator**

Manufacturer: _____ Year installed: _____
What do you call this control equipment: _____
Pollutant(s) controlled: ☐ PE ☐ OC ☐ SO_2 ☐ NOx ☐ CO ☐ Other _____
Estimated capture efficiency (%): _____ Basis for efficiency: _____
Design control efficiency (%): _____ Basis for efficiency: _____

Section II - Specific Air Contaminant Source Information

Type: ☐ Plate-wire ☐ Flat-plate ☐ Tubular ☐ Wet ☐ Other _____
Number of operating fields: _____

☐ This is the only control equipment on this air contaminant source
If no, this control equipment is: ☐ Primary ☐ Secondary ☐ Parallel
List any other air contaminant sources that are also vented to this control equipment:
_____

☐ **Concentrator**
Manufacturer: _____ Year installed: _____
What do you call this control equipment: _____
Pollutant(s) controlled: ☐ PE ☐ OC ☐ SO_2 ☐ NOx ☐ CO ☐ Other _____
Estimated capture efficiency (%):_____ Basis for efficiency: _____
Design regeneration cycle time (minutes): _____
Minimum desorption air stream temperature (°F): _____
Rotational rate (revolutions/hour): _____
☐ This is the only control equipment on this air contaminant source
If no, this control equipment is: ☐ Primary ☐ Secondary ☐ Parallel
List any other air contaminant sources that are also vented to this control equipment:
_____

☐ **Catalytic Incinerator**
Manufacturer: _____ Year installed: _____
What do you call this control equipment: _____
Pollutant(s) controlled: ☐ PE ☐ OC ☐ SO_2 ☐ NOx ☐ CO ☐ Other _____
Estimated capture efficiency (%):_____ Basis for efficiency: _____
Design control efficiency (%):_____ Basis for efficiency: _____
Minimum inlet gas temperature (°F): _____
Combustion chamber residence time (seconds): _____
Minimum temperature difference (°F) across catalyst during air contaminant source operation: _____
☐ This is the only control equipment on this air contaminant source
If no, this control equipment is: ☐ Primary ☐ Secondary ☐ Parallel
List any other air contaminant sources that are also vented to this control equipment:
_____

☐ **Thermal Incinerator/Thermal Oxidizer**
Manufacturer: _____ Year installed: _____
What do you call this control equipment: _____
Pollutant(s) controlled: ☐ PE ☐ OC ☐ SO_2 ☐ NOx ☐ CO ☐ Other _____
Estimated capture efficiency (%):_____ Basis for efficiency: _____
Design control efficiency (%):_____ Basis for efficiency: _____
Minimum operating temperature (°F) and location: _____ (See line by line instructions.)
Combustion chamber residence time (seconds): _____
☐ This is the only control equipment on this air contaminant source
If no, this control equipment is: ☐ Primary ☐ Secondary ☐ Parallel
List any other air contaminant sources that are also vented to this control equipment:
_____

☐ **Flare**
Manufacturer: _____ Year installed: _____
What do you call this control equipment: _____
Pollutant(s) controlled: ☐ PE ☐ OC ☐ SO_2 ☐ NOx ☐ CO ☐ Other _____
Estimated capture efficiency (%):_____ Basis for efficiency: _____
Design control efficiency (%):_____ Basis for efficiency: _____
Type: ☐ Enclosed ☐ Elevated (open)
Ignition device: ☐ Electric arc ☐ Pilot flame
Flame presence sensor: ☐ Yes ☐ No
☐ This is the only control equipment on this air contaminant source
If no, this control equipment is: ☐ Primary ☐ Secondary ☐ Parallel
List any other air contaminant sources that are also vented to this control equipment:

Section II - Specific Air Contaminant Source Information

☐ **Condenser**
Manufacturer: _____ Year installed: _____
What do you call this control equipment: _____
Pollutant(s) controlled: ☐ PE ☐ OC ☐ SO_2 ☐ NOx ☐ CO ☐ Other _____
Estimated capture efficiency (%):_____ Basis for efficiency: _____
Design control efficiency (%):_____ Basis for efficiency: _____

Type: ☐ Indirect contact ☐ Direct contact
Maximum exhaust gas temperature (°F) during air contaminant source operation: _____
Coolant type: _____
Design coolant temperature (°F): Minimum _____ Maximum _____
Design coolant flow rate (gpm): _____
☐ This is the only control equipment on this air contaminant source
If no, this control equipment is: ☐ Primary ☐ Secondary ☐ Parallel
List any other air contaminant sources that are also vented to this control equipment:
_____

☐ **Carbon Absorber**
Manufacturer: _____ Year installed: _____
What do you call this control equipment: _____
Pollutant(s) controlled: ☐ PE ☐ OC ☐ SO_2 ☐ NOx ☐ CO ☐ Other _____
Estimated capture efficiency (%):_____ Basis for efficiency: _____
Design control efficiency (%):_____ Basis for efficiency: _____
Type: ☐ On-site regenerative ☐ Disposable
Maximum design outlet organic compound concentration (ppmv): _____
Carbon replacement frequency or regeneration cycle time (specify units): _____
Maximum temperature of the carbon bed, after regeneration (including any cooling cycle): _____
☐ This is the only control equipment on this air contaminant source
If no, this control equipment is: ☐ Primary ☐ Secondary ☐ Parallel
List any other air contaminant sources that are also vented to this control equipment:
_____

☐ **Dry Scrubber**
Manufacturer: _____ Year installed: _____
What do you call this control equipment: _____
Pollutant(s) controlled: ☐ PE ☐ OC ☐ SO_2 ☐ NOx ☐ CO ☐ Other _____
Estimated capture efficiency (%):_____ Basis for efficiency: _____
Design control efficiency (%):_____ Basis for efficiency: _____
Reagent(s) used: Type: _____ Injection rate(s): _____
Operating pressure drop range (inches of water): Minimum: _____ Maximum: _____
☐ This is the only control equipment on this air contaminant source
If no, this control equipment is: ☐ Primary ☐ Secondary ☐ Parallel
List any other air contaminant sources that are also vented to this control equipment:
_____

☐ **Paint booth filter**
Type: ☐ Paper ☐ Fiberglass ☐ Water curtain ☐ Other _____
Design control efficiency (%):_____ Basis for efficiency: _____

☐ **Other**, describe _____
Manufacturer: _____ Year installed: _____
What do you call this control equipment: _____
Pollutant(s) controlled: ☐ PE ☐ OC ☐ SO_2 ☐ NOx ☐ CO ☐ Other
Estimated capture efficiency (%): _____ Basis for efficiency: _____

Design control efficiency (%):_____ Basis for efficiency: _____
☐ This is the only control equipment on this air contaminant source
If no, this control equipment is: ☐ Primary ☐ Secondary ☐ Parallel

Section II - Specific Air Contaminant Source Information

List any other air contaminant sources that are also vented to this control equipment:

6. Attach a Process or Activity Flow Diagram to this application for each air contaminant source included in the application. The diagram should indicate their relationships to one another. See the line by line PTI instructions for additional information.

7. Emissions egress point(s) information: PTIs which allow total emissions in excess of the thresholds listed below will be subject to an air quality modeling analysis. This analysis is to assure that the impact from the requested project will not exceed Ohio=s Acceptable Incremental Impacts for criteria pollutants and/or Maximum Allowable Ground Level Concentrations (MAGLC) for air toxics. Permit requests that would have unacceptable impacts can not be approved as proposed. See the line by line PTI instructions for additional information.

   Complete the tables below if the requested allowable annual emission rate for this PTI exceeds any of the following:

   - Particulate Matter (PM10): 10 tons per year
   - Sulfur Dioxide (SO2): 25 tons per year
   - Nitrogen Oxides (NOx): 25 tons per year
   - Carbon Monoxide (CO): 100 tons per year
   - Air Toxic: 1 ton per year. An air toxic is any air pollutant for which the American Council of Governmental Industrial Hygienists (ACGIH) has established a Threshold Limit Value (TLV).

   Complete Table 7-A below for each stack emissions egress point. An egress point is a point at which emissions from an air contaminant source are released into the ambient (outside) air. List each individual egress point on a separate line.

Table 7-A, Stack Egress Point Information

Company Name or ID for the Egress Point (examples: Stack A; Boiler Stack; etc.)	Type Code*	Stack Egress Point Shape and Dimensions (in)(examples: round 10 inch ID; rectangular 14 X 16 inches; etc.)	Stack Egress Point Height from the Ground (ft)	Stack Temp. at Max. Capacity (F)	Stack Flow Rate at Max. Capacity (ACFM)	Minimum Distance to the Property Line (ft)
CMD STACK 7	V	Round: 38-inch ID	250	250	48,071	1,000

*Type codes for stack egress points:

A. vertical stack (unobstructed): There are no obstructions to upward flow in or on the stack such as a rain cap.
B. vertical stack (obstructed): There are obstructions to the upward flow, such as a rain cap, which prevents or inhibits the air flow in a vertical direction.
C. non-vertical stack: The stack directs the air flow in a direction which is not directly upward.

Complete Table 7-B below for each fugitive emissions egress point. List each individual egress point on a separate line. Refer to the description of the fugitive egress point type codes below the table for use in completing the type code column of the table. For air contaminant sources like roadways and storage piles, only the first 5 columns need to be completed. For an air contaminant source with multiple fugitive emissions egress points, include only the primary egress points.

Table 7-B, Fugitive Egress Point Information

Company ID for the Egress Point (examples; Garage Door B, Building C; Roof Monitor; etc.)	Type Code*	Egress Point Description (examples: garage door, 12 X 30 feet, west wall; outside gravel storage piles; etc.)	Fugitive Egress Point Height from the Ground (ft)	Minimum Distance to the Property Line (ft)	Exit Gas Temp. (F)

*Type codes for fugitive egress point:

Section II - Specific Air Contaminant Source Information

D. door or window
E. other opening in the building without a duct
F. no stack and no building enclosing the air contaminant source (e.g., roadways)

Complete Table 7-C below for each Stack Egress Point identified in Table 7-A above. In each case, use the dimensions of the largest nearby building, building segment or structure. List each individual egress point on a separate line. Use the same Company Name or ID for the Egress Point in Table 7-C that was used in Table 7-A. See the line by line PTI instructions for additional information.

Table 7-C, Egress Point Additional Information (Add rows as necessary)

Company ID or Name for the Egress Point	Building Height (ft)	Building Width (ft)	Building Length (ft)
CMD STACK 7	225	70	250

8. Request for Federally Enforceable Limits

As part of this permit application, do you wish to propose voluntary restrictions to limit emissions in order to avoid specific requirements listed below, (i.e., are you requesting federally enforceable limits to obtain synthetic minor status)?

☐ yes
☒ no
☐ not sure - please contact me if this affects me

If yes, why are you requesting federally enforceable limits? Check all that apply.

a. ☐ to avoid being a major source (see OAC rule 3745-77-01)
b. ☐ to avoid being a major MACT source (see OAC rule 3745-31-01)
c. ☐ to avoid being a major modification (see OAC rule 3745-31-01)
d. ☐ to avoid being a major stationary source (see OAC rule 3745-31-01)
e. ☐ to avoid an air dispersion modeling requirement (see Engineering Guide # 69)
f. ☐ to avoid another requirement. Describe: _____

If you checked a., b. or d., please attach a facility-wide potential to emit (PTE) analysis (for each pollutant) and synthetic minor strategy to this application. (See line by line instructions for definition of PTE.) If you checked c., please attach a net emission change analysis to this application.

9. If this air contaminant source utilizes any continuous emissions monitoring equipment for indicating or demonstrating compliance, complete the following table. This does not include continuous parametric monitoring systems.

Company ID for Egress Point	Type of Monitor	Applicable performance specification (40 CFR 60, Appendix B)	Pollutant(s) Monitored
CMD STACK 7	SO_2 IN EXHAUST OR H_2S IN FUEL (TO BE DETERMINED)	SPECIFICATION 3 (SO_2) SPECIFICATION 7 (H_2S)	SO_2 H_2S

10. Do you wish to permit this air contaminant source as a portable source, allowing relocation within the state in accordance with OAC rule 3745-31-03 or OAC rule 3745-31-05?

☐ yes - Note: notification requirements in rules cited above must be followed.
☒ no

11. The appropriate Emissions Activity Category (EAC) form(s) must be completed and attached for each air contaminant source. At least one complete EAC form must be submitted for each air contaminant source for the application to be considered complete. Refer to the list attached to the PTI instructions.

Section II - Specific Air Contaminant Source Information

NOTE: One copy of this section should be filled out for each air contaminant source covered by this PTI application. See the line by line PTI instructions for additional information.

1. Company identification (name for air contaminant source for which you are applying): HOT GAS GENERATOR 8

2. List all equipment that are part of this air contaminant source: HOT GAS GENERATOR 8

3. Air Contaminant Source Installation or Modification Schedule (must be completed regardless of date of installation or modification):

   When did/will you begin to install or modify the air contaminant source? (month/year) SECOND QUARTER 2008

   When did/will you begin to operate the air contaminant source? (month/year) THIRD QUARTER 2011 **OR** after issuance of PTI _____

4. Emissions Information: The following table requests information needed to determine the applicable requirements and the compliance status of this air contaminant source with those requirements. Suggestions for how to estimate emissions may be found in the instructions to the Emissions Activity Category (EAC) forms required with this application. If you need further assistance, contact your Ohio EPA permit representative.

   - If total potential emissions of HAPs or any Air Toxic is greater than 1 ton/yr, fill in the table for that (those) pollutant(s). For all other pollutants, if "Emissions before controls (max), lb/hr" multiplied by 24 hours/day is greater than 10 lb/day, fill in the table for that pollutant.
   - If you have no add-on control equipment, "Emissions before controls= will be the same as "Actual emissions"
   - Annual emissions should be based on operating 8760 hr/yr unless you are requesting operating restrictions to limit emissions in line # 8 or have described inherent limitations below.
   - If you use units other than lb/hr or ton/yr, specify the units used (e.g., gr/dscf, lb/ton charged, lb/MMBtu, ton/12-months).
   - Requested Allowable (ton/yr) is often equivalent to Potential to Emit (PTE) as defined in OAC rule 3745-31-01 and OAC rule 3745-77-01.

Pollutant	Emissions before controls (max) (lb/hr)	Actual emissions (lb/hr)	Actual emissions (ton/year)	Requested Allowable (lb/hr)	Requested Allowable (ton/year)
Particulate emissions (PE) (formerly particulate matter, PM)	2.3	0.6	2.62	0.6	2.62
PM_{10} (PM < 10 microns in diameter)	2.3	0.6	2.62	0.6	2.62
Sulfur dioxide (SO_2)	0.94	0.24	1.06	0.24	1.06
Nitrogen oxides (NO_x)	10.2	1.32	5.8	1.32	5.8
Carbon monoxide (CO)	8.6	2.23	9.75	2.23	9.75
Organic compounds (OC)	0.56	0.15	0.64	0.15	0.64
Volatile organic compounds (VOC)	0.56	0.15	0.64	0.15	0.64
Total HAPs	0.2	0.05	0.22	0.05	0.22
Highest single HAP: (hexane)	0.18	0.048	0.21	0.048	0.21
Air Toxics (see instructions):	0.2	0.05	0.22	0.05	0.22

Provide your calculations as an attachment and explain how all process variables and emission factors were selected. Note the emissions factor(s) employed and document the origin. Example: AP-42, Table 4.4-3 (8/97); stack test, Method 5, 4/96; mass balance based on MSDS; etc.

Section II - Specific Air Contaminant Source Information

5. **Does this air contaminant source employ emissions control equipment?**

☒ **Yes** - fill out the applicable information below.

☐ **No** - proceed to item # 6.

Note: Pollutant abbreviations used below: Particulates = PE; Organic compounds = OC; Sulfur dioxide = SO_2; Nitrogen oxides = NOx; Carbon monoxide = CO

☐ **Cyclone/Multiclone**

Manufacturer: _____ Year installed: _____
What do you call this control equipment: _____
Pollutant(s) controlled: ☐ PE ☐ OC ☐ SO_2 ☐ NOx ☐ CO ☐ Other _____
Estimated capture efficiency (%): _____ Basis for efficiency: _____
Design control efficiency (%): _____ Basis for efficiency: _____
Type: ☐ Cyclone ☐ Multiclone ☐ Rotoclone ☐ Other _____
☐ This is the only control equipment on this air contaminant source
If no, this control equipment is: ☐ Primary ☐ Secondary ☐ Parallel
List any other air contaminant sources that are also vented to this control equipment:
_____

☒ **Fabric Filter/Baghouse**

Manufacturer: TO BE DETERMINED Year installed: NEW FACILITY
What do you call this control equipment: CMD BAGHOUSE 2
Pollutant(s) controlled: ☒ PE ☐ OC ☐ SO_2 ☐ NOx ☐ CO ☐ Other _____
Estimated capture efficiency (%):100 Basis for efficiency: ENGINEERING DESIGN
Design control efficiency (%):99.9 Basis for efficiency: LITERATURE
Operating pressure drop range (inches of water): Minimum: ____3____ Maximum: ___6___
Pressure type: ☐ Negative pressure ☒ Positive pressure
Fabric cleaning mechanism: ☐ Reverse air ☒ Pulse jet ☐ Shaker ☐ Other _____
☐ Lime injection or fabric coating agent used: Type: _____ Feed rate: _____
☒ This is the only control equipment on this air contaminant source
If no, this control equipment is: ☐ Primary ☐ Secondary ☐ Parallel
List any other air contaminant sources that are also vented to this control equipment:
_____

☐ **Wet Scrubber**

Manufacturer: _____ Year installed: _____
What do you call this control equipment: _____
Pollutant(s) controlled: ☐ PE ☐ OC ☐ SO_2 ☐ NOx ☐ CO ☐ Other _____
Estimated capture efficiency (%): _____ Basis for efficiency: _____
Design control efficiency (%): _____ Basis for efficiency: _____
Type: ☐ Spray chamber ☐ Packed bed ☐ Impingement ☐ Venturi ☐ Other _____
Operating pressure drop range (inches of water): Minimum: _____ Maximum: _____
pH range for scrubbing liquid: Minimum: _____ Maximum: _____
Scrubbing liquid flow rate (gal/min): _____
Is scrubber liquid recirculated? ☐ Yes ☐ No
Water supply pressure (psig): _____ NOTE: This item for spray chambers only.
☐ This is the only control equipment on this air contaminant source
If no, this control equipment is: ☐ Primary ☐ Secondary ☐ Parallel
List any other air contaminant sources that are also vented to this control equipment:
_____

☐ **Electrostatic Precipitator**

Manufacturer: _____ Year installed: _____
What do you call this control equipment: _____
Pollutant(s) controlled: ☐ PE ☐ OC ☐ SO_2 ☐ NOx ☐ CO ☐ Other _____
Estimated capture efficiency (%): _____ Basis for efficiency: _____
Design control efficiency (%): _____ Basis for efficiency: _____

Section II - Specific Air Contaminant Source Information

Type: ☐ Plate-wire ☐ Flat-plate ☐ Tubular ☐ Wet ☐ Other _____
Number of operating fields: _____

☐ This is the only control equipment on this air contaminant source
If no, this control equipment is: ☐ Primary ☐ Secondary ☐ Parallel
List any other air contaminant sources that are also vented to this control equipment:
_____

☐ **Concentrator**
Manufacturer: _____ Year installed: _____
What do you call this control equipment: _____
Pollutant(s) controlled: ☐ PE ☐ OC ☐ SO_2 ☐ NOx ☐ CO ☐ Other _____
Estimated capture efficiency (%):_____ Basis for efficiency: _____
Design regeneration cycle time (minutes): _____
Minimum desorption air stream temperature (°F): _____
Rotational rate (revolutions/hour): _____
☐ This is the only control equipment on this air contaminant source
If no, this control equipment is: ☐ Primary ☐ Secondary ☐ Parallel
List any other air contaminant sources that are also vented to this control equipment:
_____

☐ **Catalytic Incinerator**
Manufacturer: _____ Year installed: _____
What do you call this control equipment: _____
Pollutant(s) controlled: ☐ PE ☐ OC ☐ SO_2 ☐ NOx ☐ CO ☐ Other _____
Estimated capture efficiency (%):_____ Basis for efficiency: _____
Design control efficiency (%):_____ Basis for efficiency: _____
Minimum inlet gas temperature (°F): _____
Combustion chamber residence time (seconds): _____
Minimum temperature difference (°F) across catalyst during air contaminant source operation: _____
☐ This is the only control equipment on this air contaminant source
If no, this control equipment is: ☐ Primary ☐ Secondary ☐ Parallel
List any other air contaminant sources that are also vented to this control equipment:
_____

☐ **Thermal Incinerator/Thermal Oxidizer**
Manufacturer: _____ Year installed: _____
What do you call this control equipment: _____
Pollutant(s) controlled: ☐ PE ☐ OC ☐ SO_2 ☐ NOx ☐ CO ☐ Other _____
Estimated capture efficiency (%):_____ Basis for efficiency: _____
Design control efficiency (%):_____ Basis for efficiency: _____
Minimum operating temperature (°F) and location: _____ (See line by line instructions.)
Combustion chamber residence time (seconds): _____
☐ This is the only control equipment on this air contaminant source
If no, this control equipment is: ☐ Primary ☐ Secondary ☐ Parallel
List any other air contaminant sources that are also vented to this control equipment:
_____

☐ **Flare**
Manufacturer: _____ Year installed: _____
What do you call this control equipment: _____
Pollutant(s) controlled: ☐ PE ☐ OC ☐ SO_2 ☐ NOx ☐ CO ☐ Other _____
Estimated capture efficiency (%):_____ Basis for efficiency: _____
Design control efficiency (%):_____ Basis for efficiency: _____
Type: ☐ Enclosed ☐ Elevated (open)
Ignition device: ☐ Electric arc ☐ Pilot flame
Flame presence sensor: ☐ Yes ☐ No
☐ This is the only control equipment on this air contaminant source
If no, this control equipment is: ☐ Primary ☐ Secondary ☐ Parallel
List any other air contaminant sources that are also vented to this control equipment:

Section II - Specific Air Contaminant Source Information

☐ **Condenser**
Manufacturer: _____ Year installed: _____
What do you call this control equipment: _____
Pollutant(s) controlled: ☐ PE ☐ OC ☐ SO_2 ☐ NOx ☐ CO ☐ Other _____
Estimated capture efficiency (%):_____ Basis for efficiency: _____
Design control efficiency (%):_____ Basis for efficiency: _____

Type: ☐ Indirect contact ☐ Direct contact
Maximum exhaust gas temperature (°F) during air contaminant source operation: _____
Coolant type: _____
Design coolant temperature (°F): Minimum _____ Maximum _____
Design coolant flow rate (gpm): _____
☐ This is the only control equipment on this air contaminant source
If no, this control equipment is: ☐ Primary ☐ Secondary ☐ Parallel
List any other air contaminant sources that are also vented to this control equipment:
_____

☐ **Carbon Absorber**
Manufacturer: _____ Year installed: _____
What do you call this control equipment: _____
Pollutant(s) controlled: ☐ PE ☐ OC ☐ SO_2 ☐ NOx ☐ CO ☐ Other _____
Estimated capture efficiency (%):_____ Basis for efficiency: _____
Design control efficiency (%):_____ Basis for efficiency: _____
Type: ☐ On-site regenerative ☐ Disposable
Maximum design outlet organic compound concentration (ppmv): _____
Carbon replacement frequency or regeneration cycle time (specify units): _____
Maximum temperature of the carbon bed, after regeneration (including any cooling cycle): _____
☐ This is the only control equipment on this air contaminant source
If no, this control equipment is: ☐ Primary ☐ Secondary ☐ Parallel
List any other air contaminant sources that are also vented to this control equipment:
_____

☐ **Dry Scrubber**
Manufacturer: _____ Year installed: _____
What do you call this control equipment: _____
Pollutant(s) controlled: ☐ PE ☐ OC ☐ SO_2 ☐ NOx ☐ CO ☐ Other _____
Estimated capture efficiency (%):_____ Basis for efficiency: _____
Design control efficiency (%):_____ Basis for efficiency: _____
Reagent(s) used: Type: _____ Injection rate(s): _____
Operating pressure drop range (inches of water): Minimum: _____ Maximum: _____
☐ This is the only control equipment on this air contaminant source
If no, this control equipment is: ☐ Primary ☐ Secondary ☐ Parallel
List any other air contaminant sources that are also vented to this control equipment:
_____

☐ **Paint booth filter**
Type: ☐ Paper ☐ Fiberglass ☐ Water curtain ☐ Other _____
Design control efficiency (%):_____ Basis for efficiency: _____

☐ **Other**, describe _____
Manufacturer: _____ Year installed: _____
What do you call this control equipment: _____
Pollutant(s) controlled: ☐ PE ☐ OC ☐ SO_2 ☐ NOx ☐ CO ☐ Other
Estimated capture efficiency (%): _____ Basis for efficiency: _____

Design control efficiency (%):_____ Basis for efficiency: _____
☐ This is the only control equipment on this air contaminant source
If no, this control equipment is: ☐ Primary ☐ Secondary ☐ Parallel

Section II - Specific Air Contaminant Source Information

List any other air contaminant sources that are also vented to this control equipment:

_____

6. Attach a Process or Activity Flow Diagram to this application for each air contaminant source included in the application. The diagram should indicate their relationships to one another. See the line by line PTI instructions for additional information.

7. Emissions egress point(s) information: PTIs which allow total emissions in excess of the thresholds listed below will be subject to an air quality modeling analysis. This analysis is to assure that the impact from the requested project will not exceed Ohio=s Acceptable Incremental Impacts for criteria pollutants and/or Maximum Allowable Ground Level Concentrations (MAGLC) for air toxics. Permit requests that would have unacceptable impacts can not be approved as proposed. See the line by line PTI instructions for additional information.

   Complete the tables below if the requested allowable annual emission rate for this PTI exceeds any of the following:

   - Particulate Matter (PM10): 10 tons per year
   - Sulfur Dioxide (SO2): 25 tons per year
   - Nitrogen Oxides (NOx): 25 tons per year
   - Carbon Monoxide (CO): 100 tons per year
   - Air Toxic: 1 ton per year. An air toxic is any air pollutant for which the American Council of Governmental Industrial Hygienists (ACGIH) has established a Threshold Limit Value (TLV).

   Complete Table 7-A below for each stack emissions egress point. An egress point is a point at which emissions from an air contaminant source are released into the ambient (outside) air. List each individual egress point on a separate line.

Table 7-A, Stack Egress Point Information

Company Name or ID for the Egress Point (examples: Stack A; Boiler Stack; etc.)	Type Code*	Stack Egress Point Shape and Dimensions (in)(examples: round 10 inch ID; rectangular 14 X 16 inches; etc.)	Stack Egress Point Height from the Ground (ft)	Stack Temp. at Max. Capacity (F)	Stack Flow Rate at Max. Capacity (ACFM)	Minimum Distance to the Property Line (ft)
CMD STACK 8	V	Round: 38-inch ID	250	250	48,071	1,000

*Type codes for stack egress points:

A. vertical stack (unobstructed): There are no obstructions to upward flow in or on the stack such as a rain cap.
B. vertical stack (obstructed): There are obstructions to the upward flow, such as a rain cap, which prevents or inhibits the air flow in a vertical direction.
C. non-vertical stack: The stack directs the air flow in a direction which is not directly upward.

Complete Table 7-B below for each fugitive emissions egress point. List each individual egress point on a separate line. Refer to the description of the fugitive egress point type codes below the table for use in completing the type code column of the table. For air contaminant sources like roadways and storage piles, only the first 5 columns need to be completed. For an air contaminant source with multiple fugitive emissions egress points, include only the primary egress points.

Table 7-B, Fugitive Egress Point Information

Company ID for the Egress Point (examples; Garage Door B, Building C; Roof Monitor; etc.)	Type Code*	Egress Point Description (examples: garage door, 12 X 30 feet, west wall; outside gravel storage piles; etc.)	Fugitive Egress Point Height from the Ground (ft)	Minimum Distance to the Property Line (ft)	Exit Gas Temp. (F)

*Type codes for fugitive egress point:

Section II - Specific Air Contaminant Source Information

D. door or window
E. other opening in the building without a duct
F. no stack and no building enclosing the air contaminant source (e.g., roadways)

Complete Table 7-C below for each Stack Egress Point identified in Table 7-A above. In each case, use the dimensions of the largest nearby building, building segment or structure. List each individual egress point on a separate line. Use the same Company Name or ID for the Egress Point in Table 7-C that was used in Table 7-A. See the line by line PTI instructions for additional information.

Table 7-C, Egress Point Additional Information (Add rows as necessary)

Company ID or Name for the Egress Point	Building Height (ft)	Building Width (ft)	Building Length (ft)
CMD STACK 8	225	70	250

8. Request for Federally Enforceable Limits

As part of this permit application, do you wish to propose voluntary restrictions to limit emissions in order to avoid specific requirements listed below, (i.e., are you requesting federally enforceable limits to obtain synthetic minor status)?

☐ yes
☒ no
☐ not sure - please contact me if this affects me

If yes, why are you requesting federally enforceable limits? Check all that apply.

a. ☐ to avoid being a major source (see OAC rule 3745-77-01)
b. ☐ to avoid being a major MACT source (see OAC rule 3745-31-01)
c. ☐ to avoid being a major modification (see OAC rule 3745-31-01)
d. ☐ to avoid being a major stationary source (see OAC rule 3745-31-01)
e. ☐ to avoid an air dispersion modeling requirement (see Engineering Guide # 69)
f. ☐ to avoid another requirement. Describe: _____

If you checked a., b. or d., please attach a facility-wide potential to emit (PTE) analysis (for each pollutant) and synthetic minor strategy to this application. (See line by line instructions for definition of PTE.) If you checked c., please attach a net emission change analysis to this application.

9. If this air contaminant source utilizes any continuous emissions monitoring equipment for indicating or demonstrating compliance, complete the following table. This does not include continuous parametric monitoring systems.

Company ID for Egress Point	Type of Monitor	Applicable performance specification (40 CFR 60, Appendix B)	Pollutant(s) Monitored
CMD STACK 8	SO_2 IN EXHAUST OR H_2S IN FUEL (TO BE DETERMINED)	SPECIFICATION 3 (SO_2) SPECIFICATION 7 (H_2S)	SO_2 H_2S

10. Do you wish to permit this air contaminant source as a portable source, allowing relocation within the state in accordance with OAC rule 3745-31-03 or OAC rule 3745-31-05?

☐ yes - Note: notification requirements in rules cited above must be followed.
☒ no

11. The appropriate Emissions Activity Category (EAC) form(s) must be completed and attached for each air contaminant source. At least one complete EAC form must be submitted for each air contaminant source for the application to be considered complete. Refer to the list attached to the PTI instructions.

Section II - Specific Air Contaminant Source Information

NOTE: One copy of this section should be filled out for each air contaminant source covered by this PTI application. See the line by line PTI instructions for additional information.

1. Company identification (name for air contaminant source for which you are applying): HOT GAS GENERATOR 9

2. List all equipment that are part of this air contaminant source: HOT GAS GENERATOR 9

3. Air Contaminant Source Installation or Modification Schedule (must be completed regardless of date of installation or modification):

   When did/will you begin to install or modify the air contaminant source? (month/year) SECOND QUARTER 2008

   When did/will you begin to operate the air contaminant source? (month/year) THIRD QUARTER 2011 **OR** after issuance of PTI _____

4. Emissions Information: The following table requests information needed to determine the applicable requirements and the compliance status of this air contaminant source with those requirements. Suggestions for how to estimate emissions may be found in the instructions to the Emissions Activity Category (EAC) forms required with this application. If you need further assistance, contact your Ohio EPA permit representative.

   - If total potential emissions of HAPs or any Air Toxic is greater than 1 ton/yr, fill in the table for that (those) pollutant(s). For all other pollutants, if "Emissions before controls (max), lb/hr" multiplied by 24 hours/day is greater than 10 lb/day, fill in the table for that pollutant.
   - If you have no add-on control equipment, "Emissions before controls= will be the same as "Actual emissions"
   - Annual emissions should be based on operating 8760 hr/yr unless you are requesting operating restrictions to limit emissions in line # 8 or have described inherent limitations below.
   - If you use units other than lb/hr or ton/yr, specify the units used (e.g., gr/dscf, lb/ton charged, lb/MMBtu, ton/12-months).
   - Requested Allowable (ton/yr) is often equivalent to Potential to Emit (PTE) as defined in OAC rule 3745-31-01 and OAC rule 3745-77-01.

Pollutant	Emissions before controls (max) (lb/hr)	Actual emissions (lb/hr)	Actual emissions (ton/year)	Requested Allowable (lb/hr)	Requested Allowable (ton/year)
Particulate emissions (PE) (formerly particulate matter, PM)	2.3	0.6	2.62	0.6	2.62
PM_{10} (PM < 10 microns in diameter)	2.3	0.6	2.62	0.6	2.62
Sulfur dioxide (SO_2)	0.94	0.24	1.06	0.24	1.06
Nitrogen oxides (NO_x)	10.2	1.32	5.8	1.32	5.8
Carbon monoxide (CO)	8.6	2.23	9.75	2.23	9.75
Organic compounds (OC)	0.56	0.15	0.64	0.15	0.64
Volatile organic compounds (VOC)	0.56	0.15	0.64	0.15	0.64
Total HAPs	0.2	0.05	0.22	0.05	0.22
Highest single HAP: (hexane)	0.18	0.048	0.21	0.048	0.21
Air Toxics (see instructions):	0.2	0.05	0.22	0.05	0.22

Provide your calculations as an attachment and explain how all process variables and emission factors were selected. Note the emissions factor(s) employed and document the origin. Example: AP-42, Table 4.4-3 (8/97); stack test, Method 5, 4/96; mass balance based on MSDS; etc.

Section II - Specific Air Contaminant Source Information

5. **Does this air contaminant source employ emissions control equipment?**

☒ **Yes** - fill out the applicable information below.

☐ **No** - proceed to item # 6.

Note: Pollutant abbreviations used below: Particulates = PE; Organic compounds = OC; Sulfur dioxide = SO_2; Nitrogen oxides = NOx; Carbon monoxide = CO

☐ **Cyclone/Multiclone**

Manufacturer: _____ Year installed: _____
What do you call this control equipment: _____
Pollutant(s) controlled: ☐ PE ☐ OC ☐ SO_2 ☐ NOx ☐ CO ☐ Other _____
Estimated capture efficiency (%): _____ Basis for efficiency: _____
Design control efficiency (%): _____ Basis for efficiency: _____
Type: ☐ Cyclone ☐ Multiclone ☐ Rotoclone ☐ Other _____
☐ This is the only control equipment on this air contaminant source
If no, this control equipment is: ☐ Primary ☐ Secondary ☐ Parallel
List any other air contaminant sources that are also vented to this control equipment:
_____

☒ **Fabric Filter/Baghouse**

Manufacturer: TO BE DETERMINED Year installed: NEW FACILITY
What do you call this control equipment: CMD BAGHOUSE 2
Pollutant(s) controlled: ☒ PE ☐ OC ☐ SO_2 ☐ NOx ☐ CO ☐ Other _____
Estimated capture efficiency (%):100 Basis for efficiency: ENGINEERING DESIGN
Design control efficiency (%):99.9 Basis for efficiency: LITERATURE
Operating pressure drop range (inches of water): Minimum: ____3____ Maximum: ___6___
Pressure type: ☐ Negative pressure ☒ Positive pressure
Fabric cleaning mechanism: ☐ Reverse air ☒ Pulse jet ☐ Shaker ☐ Other _____
☐ Lime injection or fabric coating agent used: Type: _____ Feed rate: _____
☒ This is the only control equipment on this air contaminant source
If no, this control equipment is: ☐ Primary ☐ Secondary ☐ Parallel
List any other air contaminant sources that are also vented to this control equipment:
_____

☐ **Wet Scrubber**

Manufacturer: _____ Year installed: _____
What do you call this control equipment: _____
Pollutant(s) controlled: ☐ PE ☐ OC ☐ SO_2 ☐ NOx ☐ CO ☐ Other _____
Estimated capture efficiency (%): _____ Basis for efficiency: _____
Design control efficiency (%): _____ Basis for efficiency: _____
Type: ☐ Spray chamber ☐ Packed bed ☐ Impingement ☐ Venturi ☐ Other _____
Operating pressure drop range (inches of water): Minimum: _____ Maximum: _____
pH range for scrubbing liquid: Minimum: _____ Maximum: _____
Scrubbing liquid flow rate (gal/min): _____
Is scrubber liquid recirculated? ☐ Yes ☐ No
Water supply pressure (psig): _____ NOTE: This item for spray chambers only.
☐ This is the only control equipment on this air contaminant source
If no, this control equipment is: ☐ Primary ☐ Secondary ☐ Parallel
List any other air contaminant sources that are also vented to this control equipment:
_____

☐ **Electrostatic Precipitator**

Manufacturer: _____ Year installed: _____
What do you call this control equipment: _____
Pollutant(s) controlled: ☐ PE ☐ OC ☐ SO_2 ☐ NOx ☐ CO ☐ Other _____
Estimated capture efficiency (%): _____ Basis for efficiency: _____
Design control efficiency (%): _____ Basis for efficiency: _____

Section II - Specific Air Contaminant Source Information

Type: ☐ Plate-wire ☐ Flat-plate ☐ Tubular ☐ Wet ☐ Other _____
Number of operating fields: _____

☐ This is the only control equipment on this air contaminant source
If no, this control equipment is: ☐ Primary ☐ Secondary ☐ Parallel
List any other air contaminant sources that are also vented to this control equipment:
_____

☐ **Concentrator**
Manufacturer: _____ Year installed: _____
What do you call this control equipment: _____
Pollutant(s) controlled: ☐ PE ☐ OC ☐ SO_2 ☐ NOx ☐ CO ☐ Other _____
Estimated capture efficiency (%):_____ Basis for efficiency: _____
Design regeneration cycle time (minutes): _____
Minimum desorption air stream temperature (°F): _____
Rotational rate (revolutions/hour): _____
☐ This is the only control equipment on this air contaminant source
If no, this control equipment is: ☐ Primary ☐ Secondary ☐ Parallel
List any other air contaminant sources that are also vented to this control equipment:
_____

☐ **Catalytic Incinerator**
Manufacturer: _____ Year installed: _____
What do you call this control equipment: _____
Pollutant(s) controlled: ☐ PE ☐ OC ☐ SO_2 ☐ NOx ☐ CO ☐ Other _____
Estimated capture efficiency (%):_____ Basis for efficiency: _____
Design control efficiency (%):_____ Basis for efficiency: _____
Minimum inlet gas temperature (°F): _____
Combustion chamber residence time (seconds): _____
Minimum temperature difference (°F) across catalyst during air contaminant source operation: _____
☐ This is the only control equipment on this air contaminant source
If no, this control equipment is: ☐ Primary ☐ Secondary ☐ Parallel
List any other air contaminant sources that are also vented to this control equipment:
_____

☐ **Thermal Incinerator/Thermal Oxidizer**
Manufacturer: _____ Year installed: _____
What do you call this control equipment: _____
Pollutant(s) controlled: ☐ PE ☐ OC ☐ SO_2 ☐ NOx ☐ CO ☐ Other _____
Estimated capture efficiency (%):_____ Basis for efficiency: _____
Design control efficiency (%):_____ Basis for efficiency: _____
Minimum operating temperature (°F) and location: _____ (See line by line instructions.)
Combustion chamber residence time (seconds): _____
☐ This is the only control equipment on this air contaminant source
If no, this control equipment is: ☐ Primary ☐ Secondary ☐ Parallel
List any other air contaminant sources that are also vented to this control equipment:
_____

☐ **Flare**
Manufacturer: _____ Year installed: _____
What do you call this control equipment: _____
Pollutant(s) controlled: ☐ PE ☐ OC ☐ SO_2 ☐ NOx ☐ CO ☐ Other _____
Estimated capture efficiency (%):_____ Basis for efficiency: _____
Design control efficiency (%):_____ Basis for efficiency: _____
Type: ☐ Enclosed ☐ Elevated (open)
Ignition device: ☐ Electric arc ☐ Pilot flame
Flame presence sensor: ☐ Yes ☐ No
☐ This is the only control equipment on this air contaminant source
If no, this control equipment is: ☐ Primary ☐ Secondary ☐ Parallel
List any other air contaminant sources that are also vented to this control equipment:

Section II - Specific Air Contaminant Source Information

☐ **Condenser**

Manufacturer: _____ Year installed: _____
What do you call this control equipment: _____
Pollutant(s) controlled: ☐ PE ☐ OC ☐ SO_2 ☐ NOx ☐ CO ☐ Other _____
Estimated capture efficiency (%):_____ Basis for efficiency: _____
Design control efficiency (%):_____ Basis for efficiency: _____

Type: ☐ Indirect contact ☐ Direct contact
Maximum exhaust gas temperature (°F) during air contaminant source operation: _____
Coolant type: _____
Design coolant temperature (°F): Minimum _____ Maximum _____
Design coolant flow rate (gpm): _____
☐ This is the only control equipment on this air contaminant source
If no, this control equipment is: ☐ Primary ☐ Secondary ☐ Parallel
List any other air contaminant sources that are also vented to this control equipment:
_____

☐ **Carbon Absorber**

Manufacturer: _____ Year installed: _____
What do you call this control equipment: _____
Pollutant(s) controlled: ☐ PE ☐ OC ☐ SO_2 ☐ NOx ☐ CO ☐ Other _____
Estimated capture efficiency (%):_____ Basis for efficiency: _____
Design control efficiency (%):_____ Basis for efficiency: _____
Type: ☐ On-site regenerative ☐ Disposable
Maximum design outlet organic compound concentration (ppmv): _____
Carbon replacement frequency or regeneration cycle time (specify units): _____
Maximum temperature of the carbon bed, after regeneration (including any cooling cycle): _____
☐ This is the only control equipment on this air contaminant source
If no, this control equipment is: ☐ Primary ☐ Secondary ☐ Parallel
List any other air contaminant sources that are also vented to this control equipment:
_____

☐ **Dry Scrubber**

Manufacturer: _____ Year installed: _____
What do you call this control equipment: _____
Pollutant(s) controlled: ☐ PE ☐ OC ☐ SO_2 ☐ NOx ☐ CO ☐ Other _____
Estimated capture efficiency (%):_____ Basis for efficiency: _____
Design control efficiency (%):_____ Basis for efficiency: _____
Reagent(s) used: Type: _____ Injection rate(s): _____
Operating pressure drop range (inches of water): Minimum: _____ Maximum: _____
☐ This is the only control equipment on this air contaminant source
If no, this control equipment is: ☐ Primary ☐ Secondary ☐ Parallel
List any other air contaminant sources that are also vented to this control equipment:
_____

☐ **Paint booth filter**

Type: ☐ Paper ☐ Fiberglass ☐ Water curtain ☐ Other _____
Design control efficiency (%):_____ Basis for efficiency: _____

☐ **Other**, describe _____

Manufacturer: _____ Year installed: _____
What do you call this control equipment: _____
Pollutant(s) controlled: ☐ PE ☐ OC ☐ SO_2 ☐ NOx ☐ CO ☐ Other
Estimated capture efficiency (%): _____ Basis for efficiency: _____

Design control efficiency (%):_____ Basis for efficiency: _____
☐ This is the only control equipment on this air contaminant source
If no, this control equipment is: ☐ Primary ☐ Secondary ☐ Parallel

Section II - Specific Air Contaminant Source Information

List any other air contaminant sources that are also vented to this control equipment:

_____

6. Attach a Process or Activity Flow Diagram to this application for each air contaminant source included in the application. The diagram should indicate their relationships to one another. See the line by line PTI instructions for additional information.

7. Emissions egress point(s) information: PTIs which allow total emissions in excess of the thresholds listed below will be subject to an air quality modeling analysis. This analysis is to assure that the impact from the requested project will not exceed Ohio=s Acceptable Incremental Impacts for criteria pollutants and/or Maximum Allowable Ground Level Concentrations (MAGLC) for air toxics. Permit requests that would have unacceptable impacts can not be approved as proposed. See the line by line PTI instructions for additional information.

   Complete the tables below if the requested allowable annual emission rate for this PTI exceeds any of the following:

   - Particulate Matter (PM10): 10 tons per year
   - Sulfur Dioxide (SO2): 25 tons per year
   - Nitrogen Oxides (NOx): 25 tons per year
   - Carbon Monoxide (CO): 100 tons per year
   - Air Toxic: 1 ton per year. An air toxic is any air pollutant for which the American Council of Governmental Industrial Hygienists (ACGIH) has established a Threshold Limit Value (TLV).

   Complete Table 7-A below for each stack emissions egress point. An egress point is a point at which emissions from an air contaminant source are released into the ambient (outside) air. List each individual egress point on a separate line.

Table 7-A, Stack Egress Point Information

Company Name or ID for the Egress Point (examples: Stack A; Boiler Stack; etc.)	Type Code*	Stack Egress Point Shape and Dimensions (in)(examples: round 10 inch ID; rectangular 14 X 16 inches; etc.)	Stack Egress Point Height from the Ground (ft)	Stack Temp. at Max. Capacity (F)	Stack Flow Rate at Max. Capacity (ACFM)	Minimum Distance to the Property Line (ft)
CMD STACK 9	V	Round: 38-inch ID	250	250	48,071	1,000

*Type codes for stack egress points:

A. vertical stack (unobstructed): There are no obstructions to upward flow in or on the stack such as a rain cap.
B. vertical stack (obstructed): There are obstructions to the upward flow, such as a rain cap, which prevents or inhibits the air flow in a vertical direction.
C. non-vertical stack: The stack directs the air flow in a direction which is not directly upward.

Complete Table 7-B below for each fugitive emissions egress point. List each individual egress point on a separate line. Refer to the description of the fugitive egress point type codes below the table for use in completing the type code column of the table. For air contaminant sources like roadways and storage piles, only the first 5 columns need to be completed. For an air contaminant source with multiple fugitive emissions egress points, include only the primary egress points.

Table 7-B, Fugitive Egress Point Information

Company ID for the Egress Point (examples; Garage Door B, Building C; Roof Monitor; etc.)	Type Code*	Egress Point Description (examples: garage door, 12 X 30 feet, west wall; outside gravel storage piles; etc.)	Fugitive Egress Point Height from the Ground (ft)	Minimum Distance to the Property Line (ft)	Exit Gas Temp. (F)

*Type codes for fugitive egress point:

Section II - Specific Air Contaminant Source Information

D. door or window
E. other opening in the building without a duct
F. no stack and no building enclosing the air contaminant source (e.g., roadways)

Complete Table 7-C below for each Stack Egress Point identified in Table 7-A above. In each case, use the dimensions of the largest nearby building, building segment or structure. List each individual egress point on a separate line. Use the same Company Name or ID for the Egress Point in Table 7-C that was used in Table 7-A. See the line by line PTI instructions for additional information.

Table 7-C, Egress Point Additional Information (Add rows as necessary)

Company ID or Name for the Egress Point	Building Height (ft)	Building Width (ft)	Building Length (ft)
CMD STACK 9	225	70	250

8. Request for Federally Enforceable Limits

As part of this permit application, do you wish to propose voluntary restrictions to limit emissions in order to avoid specific requirements listed below, (i.e., are you requesting federally enforceable limits to obtain synthetic minor status)?

☐ yes
☒ no
☐ not sure - please contact me if this affects me

If yes, why are you requesting federally enforceable limits? Check all that apply.

a. ☐ to avoid being a major source (see OAC rule 3745-77-01)
b. ☐ to avoid being a major MACT source (see OAC rule 3745-31-01)
c. ☐ to avoid being a major modification (see OAC rule 3745-31-01)
d. ☐ to avoid being a major stationary source (see OAC rule 3745-31-01)
e. ☐ to avoid an air dispersion modeling requirement (see Engineering Guide # 69)
f. ☐ to avoid another requirement. Describe: _____

If you checked a., b. or d., please attach a facility-wide potential to emit (PTE) analysis (for each pollutant) and synthetic minor strategy to this application. (See line by line instructions for definition of PTE.) If you checked c., please attach a net emission change analysis to this application.

9. If this air contaminant source utilizes any continuous emissions monitoring equipment for indicating or demonstrating compliance, complete the following table. This does not include continuous parametric monitoring systems.

Company ID for Egress Point	Type of Monitor	Applicable performance specification (40 CFR 60, Appendix B)	Pollutant(s) Monitored
CMD STACK 9	SO_2 IN EXHAUST OR H_2S IN FUEL (TO BE DETERMINED)	SPECIFICATION 3 (SO_2) SPECIFICATION 7 (H_2S)	SO_2 H_2S

10. Do you wish to permit this air contaminant source as a portable source, allowing relocation within the state in accordance with OAC rule 3745-31-03 or OAC rule 3745-31-05?

☐ yes - Note: notification requirements in rules cited above must be followed.
☒ no

11. The appropriate Emissions Activity Category (EAC) form(s) must be completed and attached for each air contaminant source. At least one complete EAC form must be submitted for each air contaminant source for the application to be considered complete. Refer to the list attached to the PTI instructions.

Section II - Specific Air Contaminant Source Information

NOTE: One copy of this section should be filled out for each air contaminant source covered by this PTI application. See the line by line PTI instructions for additional information.

1. Company identification (name for air contaminant source for which you are applying): HOT GAS GENERATOR 10

2. List all equipment that are part of this air contaminant source: HOT GAS GENERATOR 10

3. Air Contaminant Source Installation or Modification Schedule (must be completed regardless of date of installation or modification):

   When did/will you begin to install or modify the air contaminant source? (month/year) SECOND QUARTER 2008

   When did/will you begin to operate the air contaminant source? (month/year) THIRD QUARTER 2011 **OR** after issuance of PTI _____

4. Emissions Information: The following table requests information needed to determine the applicable requirements and the compliance status of this air contaminant source with those requirements. Suggestions for how to estimate emissions may be found in the instructions to the Emissions Activity Category (EAC) forms required with this application. If you need further assistance, contact your Ohio EPA permit representative.

   - If total potential emissions of HAPs or any Air Toxic is greater than 1 ton/yr, fill in the table for that (those) pollutant(s). For all other pollutants, if "Emissions before controls (max), lb/hr" multiplied by 24 hours/day is greater than 10 lb/day, fill in the table for that pollutant.
   - If you have no add-on control equipment, "Emissions before controls= will be the same as "Actual emissions"
   - Annual emissions should be based on operating 8760 hr/yr unless you are requesting operating restrictions to limit emissions in line # 8 or have described inherent limitations below.
   - If you use units other than lb/hr or ton/yr, specify the units used (e.g., gr/dscf, lb/ton charged, lb/MMBtu, ton/12-months).
   - Requested Allowable (ton/yr) is often equivalent to Potential to Emit (PTE) as defined in OAC rule 3745-31-01 and OAC rule 3745-77-01.

Pollutant	Emissions before controls (max) (lb/hr)	Actual emissions (lb/hr)	Actual emissions (ton/year)	Requested Allowable (lb/hr)	Requested Allowable (ton/year)
Particulate emissions (PE) (formerly particulate matter, PM)	2.3	0.6	2.62	0.6	2.62
PM_{10} (PM < 10 microns in diameter)	2.3	0.6	2.62	0.6	2.62
Sulfur dioxide (SO_2)	0.94	0.24	1.06	0.24	1.06
Nitrogen oxides (NO_x)	10.2	1.32	5.8	1.32	5.8
Carbon monoxide (CO)	8.6	2.23	9.75	2.23	9.75
Organic compounds (OC)	0.56	0.15	0.64	0.15	0.64
Volatile organic compounds (VOC)	0.56	0.15	0.64	0.15	0.64
Total HAPs	0.2	0.05	0.22	0.05	0.22
Highest single HAP: (hexane)	0.18	0.048	0.21	0.048	0.21
Air Toxics (see instructions):	0.2	0.05	0.22	0.05	0.22

Provide your calculations as an attachment and explain how all process variables and emission factors were selected. Note the emissions factor(s) employed and document the origin. Example: AP-42, Table 4.4-3 (8/97); stack test, Method 5, 4/96; mass balance based on MSDS; etc.

Section II - Specific Air Contaminant Source Information

5. **Does this air contaminant source employ emissions control equipment?**

☒ **Yes** - fill out the applicable information below.

☐ **No** - proceed to item # 6.

Note: Pollutant abbreviations used below: Particulates = PE; Organic compounds = OC; Sulfur dioxide = SO_2; Nitrogen oxides = NOx; Carbon monoxide = CO

☐ **Cyclone/Multiclone**
Manufacturer: _____ Year installed: _____
What do you call this control equipment: _____
Pollutant(s) controlled: ☐ PE ☐ OC ☐ SO_2 ☐ NOx ☐ CO ☐ Other _____
Estimated capture efficiency (%): _____ Basis for efficiency: _____
Design control efficiency (%):_____ Basis for efficiency: _____
Type: ☐ Cyclone ☐ Multiclone ☐ Rotoclone ☐ Other _____
☐ This is the only control equipment on this air contaminant source
If no, this control equipment is: ☐ Primary ☐ Secondary ☐ Parallel
List any other air contaminant sources that are also vented to this control equipment:
_____

☒ **Fabric Filter/Baghouse**
Manufacturer: TO BE DETERMINED Year installed: NEW FACILITY
What do you call this control equipment: CMD BAGHOUSE 2
Pollutant(s) controlled: ☒ PE ☐ OC ☐ SO_2 ☐ NOx ☐ CO ☐ Other _____
Estimated capture efficiency (%):100 Basis for efficiency: ENGINEERING DESIGN
Design control efficiency (%):99.9 Basis for efficiency: LITERATURE
Operating pressure drop range (inches of water): Minimum: ____3____ Maximum: ___6___
Pressure type: ☐ Negative pressure ☒ Positive pressure
Fabric cleaning mechanism: ☐ Reverse air ☒ Pulse jet ☐ Shaker ☐ Other _____
☐ Lime injection or fabric coating agent used: Type: _____ Feed rate: _____
☒ This is the only control equipment on this air contaminant source
If no, this control equipment is: ☐ Primary ☐ Secondary ☐ Parallel
List any other air contaminant sources that are also vented to this control equipment:
_____

☐ **Wet Scrubber**
Manufacturer: _____ Year installed: _____
What do you call this control equipment: _____
Pollutant(s) controlled: ☐ PE ☐ OC ☐ SO_2 ☐ NOx ☐ CO ☐ Other _____
Estimated capture efficiency (%):_____ Basis for efficiency: _____
Design control efficiency (%):_____ Basis for efficiency: _____
Type: ☐ Spray chamber ☐ Packed bed ☐ Impingement ☐ Venturi ☐ Other _____
Operating pressure drop range (inches of water): Minimum: _____ Maximum: _____
pH range for scrubbing liquid: Minimum: _____ Maximum: _____
Scrubbing liquid flow rate (gal/min): _____
Is scrubber liquid recirculated? ☐ Yes ☐ No
Water supply pressure (psig): _____ NOTE: This item for spray chambers only.
☐ This is the only control equipment on this air contaminant source
If no, this control equipment is: ☐ Primary ☐ Secondary ☐ Parallel
List any other air contaminant sources that are also vented to this control equipment:
_____

☐ **Electrostatic Precipitator**
Manufacturer: _____ Year installed: _____
What do you call this control equipment: _____
Pollutant(s) controlled: ☐ PE ☐ OC ☐ SO_2 ☐ NOx ☐ CO ☐ Other _____
Estimated capture efficiency (%):_____ Basis for efficiency: _____
Design control efficiency (%):_____ Basis for efficiency: _____

Section II - Specific Air Contaminant Source Information

Type: ☐ Plate-wire ☐ Flat-plate ☐ Tubular ☐ Wet ☐ Other _____
Number of operating fields: _____

☐ This is the only control equipment on this air contaminant source
If no, this control equipment is: ☐ Primary ☐ Secondary ☐ Parallel
List any other air contaminant sources that are also vented to this control equipment:
_____

☐ **Concentrator**
Manufacturer: _____ Year installed: _____
What do you call this control equipment: _____
Pollutant(s) controlled: ☐ PE ☐ OC ☐ SO_2 ☐ NOx ☐ CO ☐ Other _____
Estimated capture efficiency (%):_____ Basis for efficiency: _____
Design regeneration cycle time (minutes): _____
Minimum desorption air stream temperature (°F): _____
Rotational rate (revolutions/hour): _____
☐ This is the only control equipment on this air contaminant source
If no, this control equipment is: ☐ Primary ☐ Secondary ☐ Parallel
List any other air contaminant sources that are also vented to this control equipment:
_____

☐ **Catalytic Incinerator**
Manufacturer: _____ Year installed: _____
What do you call this control equipment: _____
Pollutant(s) controlled: ☐ PE ☐ OC ☐ SO_2 ☐ NOx ☐ CO ☐ Other _____
Estimated capture efficiency (%):_____ Basis for efficiency: _____
Design control efficiency (%):_____ Basis for efficiency: _____
Minimum inlet gas temperature (°F): _____
Combustion chamber residence time (seconds): _____
Minimum temperature difference (°F) across catalyst during air contaminant source operation: _____
☐ This is the only control equipment on this air contaminant source
If no, this control equipment is: ☐ Primary ☐ Secondary ☐ Parallel
List any other air contaminant sources that are also vented to this control equipment:
_____

☐ **Thermal Incinerator/Thermal Oxidizer**
Manufacturer: _____ Year installed: _____
What do you call this control equipment: _____
Pollutant(s) controlled: ☐ PE ☐ OC ☐ SO_2 ☐ NOx ☐ CO ☐ Other _____
Estimated capture efficiency (%):_____ Basis for efficiency: _____
Design control efficiency (%):_____ Basis for efficiency: _____
Minimum operating temperature (°F) and location: _____ (See line by line instructions.)
Combustion chamber residence time (seconds): _____
☐ This is the only control equipment on this air contaminant source
If no, this control equipment is: ☐ Primary ☐ Secondary ☐ Parallel
List any other air contaminant sources that are also vented to this control equipment:
_____

☐ **Flare**
Manufacturer: _____ Year installed: _____
What do you call this control equipment: _____
Pollutant(s) controlled: ☐ PE ☐ OC ☐ SO_2 ☐ NOx ☐ CO ☐ Other _____
Estimated capture efficiency (%):_____ Basis for efficiency: _____
Design control efficiency (%):_____ Basis for efficiency: _____
Type: ☐ Enclosed ☐ Elevated (open)
Ignition device: ☐ Electric arc ☐ Pilot flame
Flame presence sensor: ☐ Yes ☐ No
☐ This is the only control equipment on this air contaminant source
If no, this control equipment is: ☐ Primary ☐ Secondary ☐ Parallel
List any other air contaminant sources that are also vented to this control equipment:

Section II - Specific Air Contaminant Source Information

☐ **Condenser**
Manufacturer: _____ Year installed: _____
What do you call this control equipment: _____
Pollutant(s) controlled: ☐ PE ☐ OC ☐ SO_2 ☐ NOx ☐ CO ☐ Other _____
Estimated capture efficiency (%):_____ Basis for efficiency: _____
Design control efficiency (%):_____ Basis for efficiency: _____

Type: ☐ Indirect contact ☐ Direct contact
Maximum exhaust gas temperature (°F) during air contaminant source operation: _____
Coolant type: _____
Design coolant temperature (°F): Minimum _____ Maximum _____
Design coolant flow rate (gpm): _____
☐ This is the only control equipment on this air contaminant source
If no, this control equipment is: ☐ Primary ☐ Secondary ☐ Parallel
List any other air contaminant sources that are also vented to this control equipment:

☐ **Carbon Absorber**
Manufacturer: _____ Year installed: _____
What do you call this control equipment: _____
Pollutant(s) controlled: ☐ PE ☐ OC ☐ SO_2 ☐ NOx ☐ CO ☐ Other _____
Estimated capture efficiency (%):_____ Basis for efficiency: _____
Design control efficiency (%):_____ Basis for efficiency: _____
Type: ☐ On-site regenerative ☐ Disposable
Maximum design outlet organic compound concentration (ppmv): _____
Carbon replacement frequency or regeneration cycle time (specify units): _____
Maximum temperature of the carbon bed, after regeneration (including any cooling cycle): _____
☐ This is the only control equipment on this air contaminant source
If no, this control equipment is: ☐ Primary ☐ Secondary ☐ Parallel
List any other air contaminant sources that are also vented to this control equipment:

☐ **Dry Scrubber**
Manufacturer: _____ Year installed: _____
What do you call this control equipment: _____
Pollutant(s) controlled: ☐ PE ☐ OC ☐ SO_2 ☐ NOx ☐ CO ☐ Other _____
Estimated capture efficiency (%):_____ Basis for efficiency: _____
Design control efficiency (%):_____ Basis for efficiency: _____
Reagent(s) used: Type: _____ Injection rate(s): _____
Operating pressure drop range (inches of water): Minimum: _____ Maximum: _____
☐ This is the only control equipment on this air contaminant source
If no, this control equipment is: ☐ Primary ☐ Secondary ☐ Parallel
List any other air contaminant sources that are also vented to this control equipment:

☐ **Paint booth filter**
Type: ☐ Paper ☐ Fiberglass ☐ Water curtain ☐ Other _____
Design control efficiency (%):_____ Basis for efficiency: _____

☐ **Other**, describe _____
Manufacturer: _____ Year installed: _____
What do you call this control equipment: _____
Pollutant(s) controlled: ☐ PE ☐ OC ☐ SO_2 ☐ NOx ☐ CO ☐ Other
Estimated capture efficiency (%): _____ Basis for efficiency: _____

Design control efficiency (%):_____ Basis for efficiency: _____
☐ This is the only control equipment on this air contaminant source
If no, this control equipment is: ☐ Primary ☐ Secondary ☐ Parallel

Section II - Specific Air Contaminant Source Information

List any other air contaminant sources that are also vented to this control equipment:

_____

6. Attach a Process or Activity Flow Diagram to this application for each air contaminant source included in the application. The diagram should indicate their relationships to one another. See the line by line PTI instructions for additional information.

7. Emissions egress point(s) information: PTIs which allow total emissions in excess of the thresholds listed below will be subject to an air quality modeling analysis. This analysis is to assure that the impact from the requested project will not exceed Ohio=s Acceptable Incremental Impacts for criteria pollutants and/or Maximum Allowable Ground Level Concentrations (MAGLC) for air toxics. Permit requests that would have unacceptable impacts can not be approved as proposed. See the line by line PTI instructions for additional information.

   Complete the tables below if the requested allowable annual emission rate for this PTI exceeds any of the following:

   - Particulate Matter (PM10): 10 tons per year
   - Sulfur Dioxide (SO2): 25 tons per year
   - Nitrogen Oxides (NOx): 25 tons per year
   - Carbon Monoxide (CO): 100 tons per year
   - Air Toxic: 1 ton per year. An air toxic is any air pollutant for which the American Council of Governmental Industrial Hygienists (ACGIH) has established a Threshold Limit Value (TLV).

   Complete Table 7-A below for each stack emissions egress point. An egress point is a point at which emissions from an air contaminant source are released into the ambient (outside) air. List each individual egress point on a separate line.

Table 7-A, Stack Egress Point Information

Company Name or ID for the Egress Point (examples: Stack A; Boiler Stack; etc.)	Type Code*	Stack Egress Point Shape and Dimensions (in)(examples: round 10 inch ID; rectangular 14 X 16 inches; etc.)	Stack Egress Point Height from the Ground (ft)	Stack Temp. at Max. Capacity (F)	Stack Flow Rate at Max. Capacity (ACFM)	Minimum Distance to the Property Line (ft)
CMD STACK 10	V	Round: 38-inch ID	250	250	48,071	1,000

*Type codes for stack egress points:

A. vertical stack (unobstructed): There are no obstructions to upward flow in or on the stack such as a rain cap.
B. vertical stack (obstructed): There are obstructions to the upward flow, such as a rain cap, which prevents or inhibits the air flow in a vertical direction.
C. non-vertical stack: The stack directs the air flow in a direction which is not directly upward.

Complete Table 7-B below for each fugitive emissions egress point. List each individual egress point on a separate line. Refer to the description of the fugitive egress point type codes below the table for use in completing the type code column of the table. For air contaminant sources like roadways and storage piles, only the first 5 columns need to be completed. For an air contaminant source with multiple fugitive emissions egress points, include only the primary egress points.

Table 7-B, Fugitive Egress Point Information

Company ID for the Egress Point (examples; Garage Door B, Building C; Roof Monitor; etc.)	Type Code*	Egress Point Description (examples: garage door, 12 X 30 feet, west wall; outside gravel storage piles; etc.)	Fugitive Egress Point Height from the Ground (ft)	Minimum Distance to the Property Line (ft)	Exit Gas Temp. (F)

*Type codes for fugitive egress point:

Section II - Specific Air Contaminant Source Information

D. door or window
E. other opening in the building without a duct
F. no stack and no building enclosing the air contaminant source (e.g., roadways)

Complete Table 7-C below for each Stack Egress Point identified in Table 7-A above. In each case, use the dimensions of the largest nearby building, building segment or structure. List each individual egress point on a separate line. Use the same Company Name or ID for the Egress Point in Table 7-C that was used in Table 7-A. See the line by line PTI instructions for additional information.

Table 7-C, Egress Point Additional Information (Add rows as necessary)

Company ID or Name for the Egress Point	Building Height (ft)	Building Width (ft)	Building Length (ft)
CMD STACK 10	225	70	250

8. Request for Federally Enforceable Limits

As part of this permit application, do you wish to propose voluntary restrictions to limit emissions in order to avoid specific requirements listed below, (i.e., are you requesting federally enforceable limits to obtain synthetic minor status)?

☐ yes
☒ no
☐ not sure - please contact me if this affects me

If yes, why are you requesting federally enforceable limits? Check all that apply.

a. ☐ to avoid being a major source (see OAC rule 3745-77-01)
b. ☐ to avoid being a major MACT source (see OAC rule 3745-31-01)
c. ☐ to avoid being a major modification (see OAC rule 3745-31-01)
d. ☐ to avoid being a major stationary source (see OAC rule 3745-31-01)
e. ☐ to avoid an air dispersion modeling requirement (see Engineering Guide # 69)
f. ☐ to avoid another requirement. Describe: _____

If you checked a., b. or d., please attach a facility-wide potential to emit (PTE) analysis (for each pollutant) and synthetic minor strategy to this application. (See line by line instructions for definition of PTE.) If you checked c., please attach a net emission change analysis to this application.

9. If this air contaminant source utilizes any continuous emissions monitoring equipment for indicating or demonstrating compliance, complete the following table. This does not include continuous parametric monitoring systems.

Company ID for Egress Point	Type of Monitor	Applicable performance specification (40 CFR 60, Appendix B)	Pollutant(s) Monitored
CMD STACK 10	SO_2 IN EXHAUST OR H_2S IN FUEL (TO BE DETERMINED)	SPECIFICATION 3 (SO_2) SPECIFICATION 7 (H_2S)	SO_2 H_2S

10. Do you wish to permit this air contaminant source as a portable source, allowing relocation within the state in accordance with OAC rule 3745-31-03 or OAC rule 3745-31-05?

☐ yes - Note: notification requirements in rules cited above must be followed.
☒ no

11. The appropriate Emissions Activity Category (EAC) form(s) must be completed and attached for each air contaminant source. At least one complete EAC form must be submitted for each air contaminant source for the application to be considered complete. Refer to the list attached to the PTI instructions.

FOR OHIO EPA USE
FACILITY ID: _____
EU ID: _____ PTI#: _____

EMISSIONS ACTIVITY CATEGORY FORM
COAL PROCESSING PLANTS AND COAL LOADING FACILITIES

This form is to be completed for each emissions unit located at a coal processing plant and a coal loading facility. State/Federal regulations which may apply to these facilities are listed in the instructions. Note that there may be other regulations which apply to this emissions unit which are not included in this list.

Note: This emissions activity category (EAC) form does not include roadways and parking areas, storage piles, material handling operations, or mineral extraction operations which may be associated with a coal processing plant. Therefore, additional EAC forms for those emissions units may need to be submitted.

1. Reason this form is being submitted (Check one)

   ☒ New Permit ☐ Renewal or Modification of Air Permit Number(s) (e.g. F001)_____

2. Maximum Operating Schedule: 24 hours per day; 365 days per year

   If the schedule is less than 24 hours/day and 365 days/year, what limits the schedule to less than maximum? See instructions for examples. _____

3. Maximum plant throughput: 2,000 tons per hour; 17.52 million tons per year

4. Does this facility prepare coal by one or more of the following processes: breaking, crushing, screening, wet or dry cleaning and thermal drying? ☒ Yes ☐ No

5. Is this facility a portable plant? ☐ yes ☒ no

6. Identification of types of processes:

Check Those Emissions Units Present	Fugitive Dust Emissions Units	How many?
☒	Primary crushing/screening	2 per crusher house
☐	Secondary crushing/screening	
☐	Cleaning	
☒	Loading:	
☐	Rail car/barge	
☒	Truck	1 (Coal & Biomass Hopper Building)
☒	Other (describe):	5 (shared transfer towers)
	Silos	6
	Thermal drying (CMD)	7
	Coal bunkers	7
	Filling vessels(coal)	7

7. Process data:

Operation	Type	Year installed	Number of units	Maximum rate (tons/hour)	Maximum rate (tons/year)
Primary crushing/screening (Coal Crusher House)	To be determined	New facility	2	2,000 (combined)	17.52 million (combined)
Secondary crushing/screening					
Cleaning	☐ Wet ☐ Dry				
Unloading 1 (5 Transfer towers & 1 Coal Crusher House)	☐ Railcar ☐ Truck ☐ Barge ☒ Other (describe):covered conveyors to transfer towers or coal crusher house	New facility	5 shared transfer towers & 1 Coal Crusher House	3,500 to towers 1-4, 2,000 tph to tower 5, and 5,500 to Coal Crusher House	30.66 million to towers 1-4, 17.52 million to tower 5, 48.18 million to Coal Crusher House
Unloading 2 (Coal & Biomass Hopper Building)	☐ Railcar ☒ Truck ☐ Barge ☐ Other (describe):	New facility	1 (shared)	300	2.63 million
Loading	☐ Railcar ☐ Truck ☐ Barge ☐ Other (describe):_____				
Storage (stock piles)	see Module 1				
Storage (silos)	To be determined	New facility	6	2,000	17.52 million
Thermal dryers	Custom hot gas generator	New facility	7	~200 per unit	1.84 million per unit
Other: Coal Bunkers	To be determined	New facility	7	~200 per unit	1.84 million per unit
Other: Filling Vessels (Coal)	To be determined	New facility	7	~200 per unit	1.84 million per unit

8. Control methods to be used for emissions from coal processing and loading facilities:

	Capture Method	Capture Efficiency	Control Method	Control Efficiency
Primary crushing/screening	Enclosed Coal Crusher House	>99.99	Baghouse	99.9
Secondary crushing/screening	NA			
Cleaning	NA			
Unloading 1	Enclosed conveyors to transfer towers or Coal Crusher House	>99.99	Baghouses	99.9
Unloading 2	Inside Coal Hopper Building	>99.99	Baghouse	99
Loading				
Storage	see Module 1			
Thermal dryer	Recirculation of 74% of exhaust	74	None	74
Other: Coal Bunkers	Bunkers located inside building	>99.99	Bin vent filters	99.9
Other: Filling Vessels (Coal)	Pressurized feed system and pneumatic transport	100	Bin vent filters	99.9

9. Details for wet suppression systems

	Year Installed	Material Used (wetting agent)	Application Point(s)	Application Rate (gal./ton processed)
Primary crushing/screening	NA			
Secondary crushing/screening	NA			
Unloading	NA			
Loading	NA			
Storage	NA			
Other:_____ _____	NA			

FOR OHIO EPA USE
FACILITY ID: _____
EU ID: _____ PTI#: _____

EMISSIONS ACTIVITY CATEGORY FORM
COAL PROCESSING PLANTS AND COAL LOADING FACILITIES
(BIOMASS)

This form is to be completed for each emissions unit located at a coal processing plant and a coal loading facility. State/Federal regulations which may apply to these facilities are listed in the instructions. Note that there may be other regulations which apply to this emissions unit which are not included in this list.

Note: This emissions activity category (EAC) form does not include roadways and parking areas, storage piles, material handling operations, or mineral extraction operations which may be associated with a coal processing plant. Therefore, additional EAC forms for those emissions units may need to be submitted.

1. Reason this form is being submitted (Check one)

   ☒ New Permit ☐ Renewal or Modification of Air Permit Number(s) (e.g. F001)_____

2. Maximum Operating Schedule: 24 hours per day; 365 days per year

   If the schedule is less than 24 hours/day and 365 days/year, what limits the schedule to less than maximum? See instructions for examples. _____

3. Maximum plant throughput: 2,000 tons per hour; 17.52 million tons per year

4. Does this facility prepare biomass by one or more of the following processes: breaking, crushing, screening, wet or dry cleaning and thermal drying? ☒ Yes ☐ No

5. Is this facility a portable plant? ☐ yes ☒ no

6. Identification of types of processes:

Check Those Emissions Units Present	Fugitive Dust Emissions Units	How many?
☒	Primary crushing/screening	2 per crusher house
☐	Secondary crushing/screening	
☐	Cleaning	
☒	Loading:	
☐	Rail car/barge	
☒	Truck	1 (Coal & Biomass Hopper Building)
☒	Other (describe):	5 (shared transfer towers)
	Silos	2
	Thermal drying (CMD)	3
	Biomass bunkers	3
	Filling vessels (biomass)	3

7. Process data:

Operation	Type	Year installed	Number of units	Maximum rate (tons/hour)	Maximum rate (tons/year)
Primary crushing/screening (Biomass Crusher House)	To be determined	New facility	2	2,000 (combined)	17.52 million (combined)
Secondary crushing/screening					
Cleaning	☐ Wet ☐ Dry				
Unloading 1 (5 Transfer towers & 1 Biomass Crusher House)	☐ Railcar ☐ Truck ☐ Barge ☒ Other (describe):covered conveyors to transfer towers or biomass crusher house	New facility	5 shared transfer towers & 1 Biomass Crusher House	3,500 to towers 1-4, 2,000 tph to tower 5, and 5,500 to Biomass Crusher House	30.66 million to towers 1-4, 17.52 million to tower 5, 48.18 million to Biomass Crusher House
Unloading 2 (Coal & Biomass Hopper Building)	☐ Railcar ☒ Truck ☐ Barge ☐ Other (describe):	New facility	1 (shared)	300	2.63 million
Loading	☐ Railcar ☐ Truck ☐ Barge ☐ Other (describe):_____				
Storage (stock piles)	see Module 1				
Storage (silos)	To be determined	New facility	2	2,000	17.52 million
Thermal dryers	Custom hot gas generator	New facility	3	~200 per unit	1.84 million per unit
Other: Biomass Bunkers	To be determined	New facility	3	~200 per unit	1.84 million per unit
Other: Filling Vessels (Biomass)	To be determined	New facility	3	~200 per unit	1.84 million per unit

8. Control methods to be used for emissions from coal processing and loading facilities:

	Capture Method	Capture Efficiency	Control Method	Control Efficiency
Primary crushing/screening	Enclosed Biomass Crusher House	>99.99	Baghouse	99.9
Secondary crushing/screening	NA			
Cleaning	NA			
Unloading 1	Enclosed conveyors to transfer towers or Biomass Crusher House	>99.99	Baghouses	99.9
Unloading 2	Inside Biomass Hopper Building	>99.99	Baghouse	99
Loading				
Storage	see Module 1			
Thermal dryer	Recirculation of 74% of exhaust	74	None	74
Other: Biomass Bunkers	Bunkers located inside building	>99.99	Bin vent filters	99.9
Other: Filling Vessels (Biomass)	Pressurized feed system and pneumatic transport	100	Bin vent filters	99.9

9. Details for wet suppression systems

	Year Installed	Material Used (wetting agent)	Application Point(s)	Application Rate (gal./ton processed)
Primary crushing/screening	NA			
Secondary crushing/screening	NA			
Unloading	NA			
Loading	NA			
Storage	NA			
Other:_____ _____	NA			

EPA-R5-2019-006986_0000088