# DAILY REPORT
## ENVIRONMENTAL QUALITY MANAGEMENT, INC.
## A K STEEL, MIDDLETOWN WORKS

Date: 4/25/18

Location: Middletown C.P.

Inspector: Chaile Kouli

| | Battery | # Leaking | Total | % Leaking | % Allowable EPA Standards |
|---|---|---|---|---|---|
| Doors | Wilputte | 3 | 144 | 2.08 | 3.3% |
| Lids | Wilputte | 0 | 213 | 0 | 0.4% |
| Standpipes | Wilputte | 0 | 142 | 0 | 2.5% |

| | Observations (sec.) Wilputte |
|---|---|
| | 6.0 |
| | 4.5 |
| | 5.5 |
| | 6.0 |
| | 5.5 |
| | 27.5 |
| Total: | 5.5 |

Average: 12.0

Comments:

# Charging Inspection
## Environmental Quality Management, Inc.
## A K Steel, Middletown Works

Battery: Wilpatte

Co./EPA Personnel: /

Date: 4/25/18

Inspector: [signature]

Shift: 7-3

Certification Expiration Date: N/A

Weather/Temp. Clear 55°

Start Time: 1134 Hr:Min

End Time: 12:48 Hr:Min

Larry Car #: EAST

| Charge Number | Oven # | Start Time | End Time | Visible Emission Seconds | Visible Emission (a) +1 Second | Ln Ve's (a) +1 Second | Comments |
|---|---|---|---|---|---|---|---|
| 1 | 14 | 11:34 | 11:39 | 6.0 | | | |
| 2 | 16 | 11:52 | 11:57 | 4.5 | | | |
| 3 | 18 | 12:07 | 12:12 | 5.5 | | | #20 over sea Rapid |
| 4 | 22 | 12:23 | 12:28 | 6.0 | | | |
| 5 | 24 | 12:43 | 12:48 | 5.5 | | | |
| | | | | | | | |
| | | | | | | | |
| | | | | | | | |
| | | | | | | | |
| | | | | | | | |
| | Total 5 Charges | | | 27.5 | | | ÷5=y= |
| | Average | | | 5.5 | | | (e^y)-1=( )-1= |

a - For use only when computer printout is not included

# Topside Inspection
## Environmental Quality Management, Inc.
## A K Steel, Middletown Works

Battery: Wilputte  Oven Not Observed: _____  Co./EPA Personnel: _____

Date: 4/28/18  Inoperable Ovens: _____  Certification Expiration Date: N/A

Shift: 7.3  Inspector: [signature]

Start Time 11:23 Hr:Min  End Time 11:25 Hr:Min

Start Time 11:26 Hr:Min  End Time 11:28 Hr:Min

Start Time 11:21 Hr:Min  End Time 11:32 Hr:Min

**PS Off Pass**

Actual T 2 m 20 s= ____ sec.

Allowable T=(304 sec)+(10 sec* ____ )= ____ %

| Oven # | Push Side Offtakes | | | Comments |
|---|---|---|---|---|
| 14 | D | I | | |
| 20 | D | I | | |
| 27 | D | I | | |
| 12 | D | I | | |
| 76 | D | I | | |
| | D | I | | |
| | D | I | | |
| | D | I | | |
| | D | I | | |
| | D | I | | |
| | D | I | | |
| | D | I | | |

**CS Off Pass**

Actual T 2 m 14 s= ____ sec

Allowable T=(304 sec)+(10 sec* ____ )= ____ %

| Oven # | Coke Side Offtakes | | | Comments |
|---|---|---|---|---|
| 14 | D | I | | |
| 20 | D | I | | |
| 27 | D | I | | |
| 12 | D | I | | |
| 76 | D | I | | |
| | D | I | | |
| | D | I | | |
| | D | I | | |
| | D | I | | |
| | D | I | | |
| | D | I | | |
| | D | I | | |

**Charge Lid Pass**

Actual T 2 m 20 s= ____ sec

Allowable T=(304 sec)+(10 sec* ____ )= ____ %

| Oven # | Charge Lids | | | | | Comments |
|---|---|---|---|---|---|---|
| 14 | D | I | 1 | 2 | 3 | |
| 20 | D | I | 1 | 2 | 3 | |
| 27 | D | I | 1 | 2 | 3 | |
| 12 | D | I | 1 | 2 | 3 | |
| 76 | D | I | 1 | 2 | 3 | |
| | D | I | 1 | 2 | 3 | |
| | D | I | 1 | 2 | 3 | |
| | D | I | 1 | 2 | 3 | |
| | D | I | 1 | 2 | 3 | |
| | D | I | 1 | 2 | 3 | |
| | D | I | 1 | 2 | 3 | |
| | D | I | 1 | 2 | 3 | |

D - Decarbonizing
I - Inoperable
B - Base Sand Seal
$F_H$ - Horizontal Flange
R - Riser Lid
G - Gooseneck
$F_V$ - Vertical Flange
V - Valve Body
3 - Observed Leak

$$PLL = \frac{\#\text{Leaking Lids}}{\#\text{Lids Observed}} = \frac{0}{228 - \underset{\text{In-op}}{12} - \underset{\text{LNO}}{3}} = \boxed{0\%} = 213$$ Lid Leaks

$$PLO = \frac{\#\text{Leaking Offtakes}}{\#\text{Offtakes Observed}} = \frac{0}{152 - \underset{\text{In-op OFF}}{8} - \underset{\text{ONO}}{2}} = \boxed{0\%} = 142$$ Leaking Offtakes

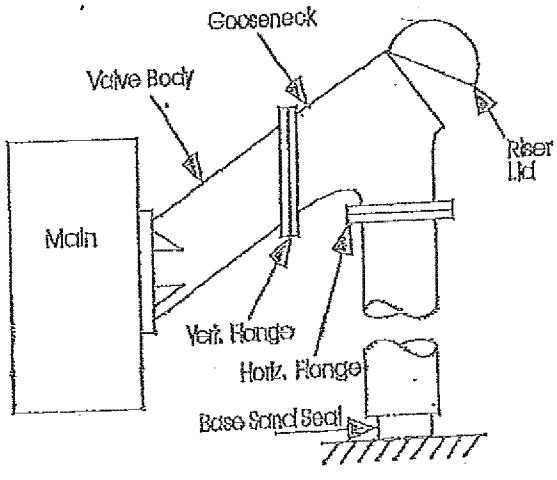


Total Lid Leaks: 0
Total Offtake Leaks: 0

# Door Inspection
## Environmental Quality Management, Inc.
## A.K Steel, Middletown Works

Battery: Wilpulte  Door Not Observed: _____  Co./EPA Personnel: _____

Date: 4/25/18  Inoperable Ovens: _____  Inspector: Charlie Kelly

Shift: 7-3  Certification Expiration Date: N/A

Start Time: 12:49 Hr:Min  End Time: 12:55 Hr:Min

Start Time: 12:59 Hr:Min  End Time: 1:03 Hr:Min

Pusher Side: Actual T: 3 m 00 s= _____ sec.

Allowable T=(304 sec)+(10 sec* _____ )= _____ sec

Coke Side: Actual T: 3 m 30 s= _____ sec.

Allowable T=(304 sec)+(10 sec* _____ )= _____ sec

| Oven # | Doors | | | Comments |
|---|---|---|---|---|
| | D | C | PU | |
| | D | C | PU | |
| | D | C | PU | |
| | D | C | PU | |
| | D | C | PU | |
| | D | C | PU | |
| | D | C | PU | |
| | D | C | PU | |
| | D | C | PU | |
| | D | C | PU | |
| | D | C | PU | |
| | D | C | PU | |
| | D | C | PU | |
| | D | C | PU | |
| | D | C | PU | |
| | D | C | PU | |
| | D | C | PU | |
| | D | C | PU | |
| | D | C | PU | |

| Oven # | Doors | | Comments |
|---|---|---|---|
| 35 | D | ~~PU~~ | |
| 47 | D | ~~PU~~ | |
| 69 | D | ~~PU~~ | |
| | D | PU | |
| | D | PU | |
| | D | PU | |
| | D | PU | |
| | D | PU | |
| | D | PU | |
| | D | PU | |
| | D | PU | |
| | D | PU | |
| | D | PU | |
| | D | PU | |
| | D | PU | |
| | D | PU | |
| | D | PU | |
| | D | PU | |
| | D | PU | |

D - Door  PU - Point Up  C - Chuck

Total Leaks = 0 (PS) + 3 (CS) = 3

Dob = 152 - 8 (Inoperable Doors) - 0 (DNO) = 144

PLD = Door Leaks / Dob = 3 / 144 = 2.08 % Door Leaks

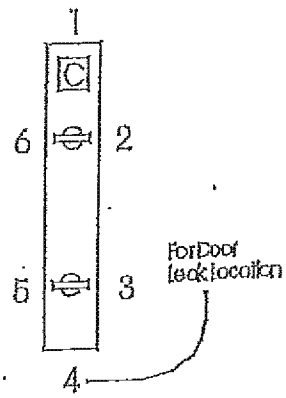

# A.K. Steel, Middletown Works

Battery: Wilputte

Co./EPA Personnel: /

Date: 4/25/18

Inspector: Charlie

Shift: 7-3

Certification Expiration Date: N/A

| Source | Coke Side Leak Location | Push Side Leak Location | Comments |
|---|---|---|---|
| 1. Spoon Hole Covers | OK | OK | |
| 2. Valve Body Flange/Damper Flange | OK | OK | |
| 3. Crossovers (4)/Flare Stacks (4) | OK | OK | |
| 4. Liquor Piping/Intakes & Steam | OK | OK | |

Regulator:
Back Pressure: H 6 mm/$H_2O$ with avg. swings of 6 Last 8 hrs
W 7 mm/$H_2O$ with avg. swings of 6 Last 8 hrs

Remarks: Push Side | Coke Side

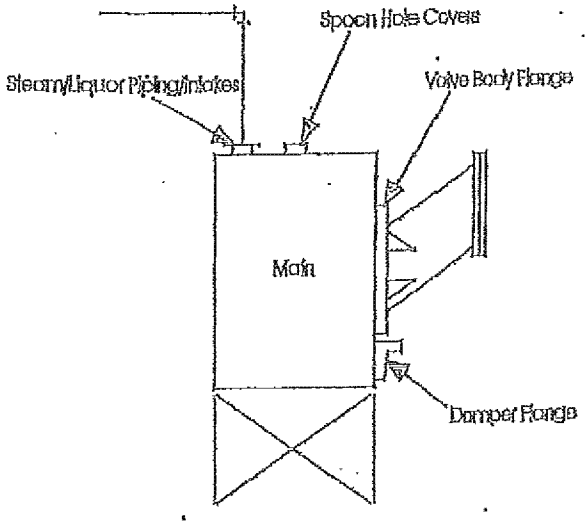


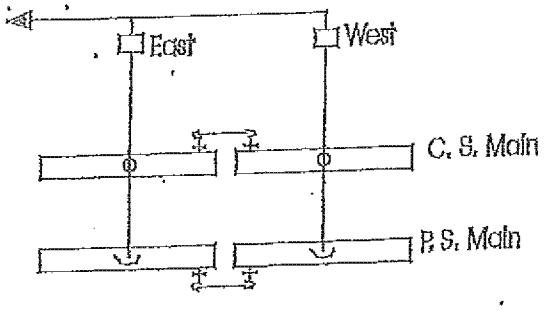

# DAILY REPORT
## ENVIRONMENTAL QUALITY MANAGEMENT, INC.
## A K STEEL, MIDDLETOWN WORKS

Date: 4/26/18

Location: Middletown C.P.

Inspector: Charles Baile

| | Battery | # Leaking | Total | % Leaking | % Allowable EPA Standards |
|---|---|---|---|---|---|
| Doors | Wilputte | 5 | 148 | 3.38 | 3.3% |
| Lids | Wilputte | 0 | 219 | 0 | 0.4% |
| Standpipes | Wilputte | 1 | 146 | .70 | 2.5% |

| | Observations (sec.) Wilputte |
|---|---|
| | 6.5 |
| | 4.0 |
| | 5.5 |
| | 13.0 |
| | 6.0 |
| | 35.0 |
| Total: | 7.0 |

12.0

Average:

Comments:

# Charging Inspection
## Environmental Quality Management, Inc.
## A K Steel, Middletown Works

Battery Wilputte

Co./EPA Personnel

Date: 4/26/18

Inspector: Chad Steele

Shift: 7-3

Certification Expiration Date: N/A

Weather/Temp. Clear 62°

Start Time: 11:27 Hr:Min
End Time: 12:39 Hr:Min
Larry Car # EAST

| Charge Number | Oven # | Start Time | End Time | Visible Emission Seconds | Visible Emission (a) +1 Second | Ln Ve's (a) +1 Second | Comments |
|---|---|---|---|---|---|---|---|
| 1 | 43 | 11:27 | 11:28 | 6.5 | | | |
| 2 | 45 | 11:38 | 11:43 | 4.0 | | | |
| 3 | 47 | 12:01 | 12:06 | 5.5 | | | |
| 4 | 49 | 12:15 | 12:20 | 13.0 | | | |
| 5 | 51 | 12:34 | 12:39 | 6.0 | | | |
| | | | | | | | |
| | | | | | | | |
| | | | | | | | |
| | | | | | | | |
| | | | | | | | |
| | Total 5 Charges | | | 35.0 | | | ÷5=y= |
| | Average | | | 7.0 | | | $(e^y)-1=(\quad)-1=$ |

a - For use only when computer printout is not included

# Topside Inspection
## Environmental Quality Management, Inc.
## A K Steel, Middletown Works

Battery: Wilputte  Oven Not Observed: _____  Co./EPA Personnel: _____

Date: 4/26/18  Inoperable Ovens: _____  Certification Expiration Date: N/A

Shift: 7.3  Inspector: Charles Kaul

Start Time 11:11 Hr:Min  End Time 11:13 Hr:Min

Start Time 11:14 Hr:Min  End Time 11:16 Hr:Min

Start Time 11:17 Hr:Min  End Time 11:20 Hr:Min

**PS Off Pass**
Actual T 2 m 20 s = ____ sec.
Allowable T=(304 sec)+(10 sec* ____ )= ____ %

| Oven # | Push Side Offtakes | | | Comments |
|---|---|---|---|---|
| 43 | ~~D~~ | I | | |
| 12 | D | ~~I~~ | | |
| 20 | D | ~~I~~ | | |
| | D | I | | |
| | D | I | | |
| | D | I | | |
| | D | I | | |
| | D | I | | |
| | D | I | | |
| | D | I | | |
| | D | I | | |
| | D | I | | |

**CS Off Pass**
Actual T 2 m 11 s = ____ sec
Allowable T=(304 sec)+(10 sec* ____ )= ____ %

| Oven # | Coke Side Offtakes | | | Comments |
|---|---|---|---|---|
| 43 | ~~D~~ | I | | |
| 12 | D | ~~I~~ | | |
| 20 | D | ~~I~~ | | |
| | D | I | | |
| 76 | D | I | | R |
| | D | I | | |
| | D | I | | |
| | D | I | | |
| | D | I | | |
| | D | I | | |
| | D | I | | |
| | D | I | | |

**Charge Lid Pass**
Actual T 2 m 20 s = ____ sec
Allowable T=(304 sec)+(10 sec* ____ )= ____ %

| Oven # | Charge Lids | | | | | Comments |
|---|---|---|---|---|---|---|
| 43 | ~~D~~ | I | 1 | 2 | 3 | |
| 12 | D | ~~I~~ | 1 | 2 | 3 | |
| 20 | D | ~~I~~ | 1 | 2 | 3 | |
| | D | I | 1 | 2 | 3 | |
| | D | I | 1 | 2 | 3 | |
| | D | I | 1 | 2 | 3 | |
| | D | I | 1 | 2 | 3 | |
| | D | I | 1 | 2 | 3 | |
| | D | I | 1 | 2 | 3 | |
| | D | I | 1 | 2 | 3 | |
| | D | I | 1 | 2 | 3 | |
| | D | I | 1 | 2 | 3 | |

D - Decarbonizing
I - Inoperable
B - Base Sand Seal
$F_H$ - Horizontal Flange
R - Riser Lid
G - Gooseneck
$F_V$ - Vertical Flange
V - Valve Body
3 - Observed Leak

$$PLL = \frac{\#\text{Leaking Lids}}{\#\text{Lids Observed}} = \frac{0}{228 - \underset{\text{In-op}}{6} - \underset{\text{LNO}}{3}} = \boxed{0\%} = 219$$ Lid Leaks

$$PLO = \frac{\#\text{Leaking Offtakes}}{\#\text{Offtakes Observed}} = \frac{1}{152 - \underset{\text{In-op OFF}}{4} - \underset{\text{ONO}}{2}} = \boxed{.70\%} = 146$$ Leaking Offtakes

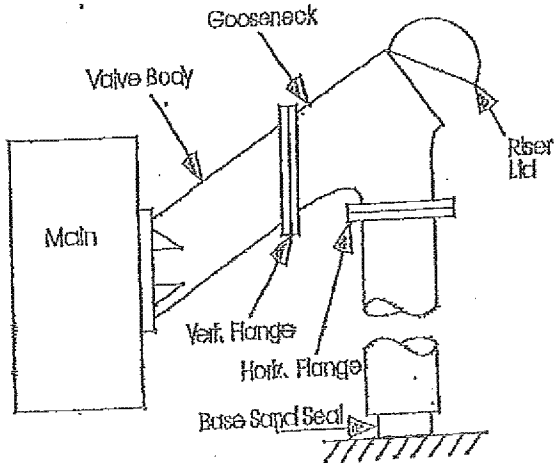


Total Lid Leaks: 0
Total Offtake Leaks: 1

# Door Inspection
## Environmental Quality Management, Inc.
## AK Steel, Middletown Works

Battery: Wilputte  Door Not Observed: _____  Co./EPA Personnel: _____

Date: 4/26/18  Inoperable Ovens: _____  Inspector: Chuck Fuller

Shift: 7-3  Certification Expiration Date: N/A

Start Time: 10:51 Hr:Min  End Time: 10:54 Hr:Min

Start Time: 10:57 Hr:Min  End Time: 11:00 Hr:Min

**Pusher Side**

Actual T: 3 m 08 s = _____ sec.

Allowable T=(304 sec)+(10 sec* _____ )= _____ sec

| Oven # | Doors | | | Comments |
|---|---|---|---|---|
| | D | C | PU | |
| | D | C | PU | |
| | D | C | PU | |
| | D | C | PU | |
| | D | C | PU | |
| | D | C | PU | |
| | D | C | PU | |
| | D | C | PU | |
| | D | C | PU | |
| | D | C | PU | |
| | D | C | PU | |
| | D | C | PU | |
| | D | C | PU | |
| | D | C | PU | |
| | D | C | PU | |
| | D | C | PU | |
| | D | C | PU | |
| | D | C | PU | |
| | D | C | PU | |

**Coke Side**

Actual T: 3 m 50 s = _____ sec.

Allowable T=(304 sec)+(10 sec* _____ )= _____ sec

| Oven # | Doors | | Comments |
|---|---|---|---|
| 21 | D | PU | |
| 30 | D | PU | |
| 66 | D | PU | |
| 70 | D | PU | |
| 76 | D | PU | |
| | D | PU | |
| | D | PU | |
| | D | PU | |
| | D | PU | |
| | D | PU | |
| | D | PU | |
| | D | PU | |
| | D | PU | |
| | D | PU | |
| | D | PU | |
| | D | PU | |
| | D | PU | |
| | D | PU | |
| | D | PU | |
| | D | PU | |

D - Door  PU - Point Up  C - Chuck

Total Leaks = 0 (PS) + 5 (CS) = 5

Doh = 152 - 4 (Inoperable Doors) - 0 (DNO) = 148

FLD = Door Leaks / Doh = 5 / 148 = 3.38 % Door Leaks

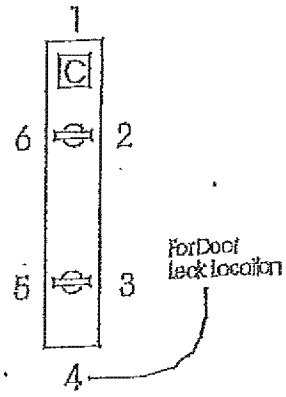

# A.K Steel, Middletown Works

Battery: Wilpnite

Co./EPA Personnel

Date: 4/26/19

Inspector: [illegible]

Shift: 7-3

Certification Expiration Date: N/A

| Source | Coke Side Leak Location | Push Side Leak Location | Comments |
|---|---|---|---|
| 1. Spoon Hole Covers | 011 | 011 | |
| 2. Valve Body Flange/Damper Flange | 011 | 011 | |
| 3. Crossovers (4)/Flare Stacks (4) | 04 | 01 | |
| 4. Liquor Piping/Intakes & Steam | 01 | 011 | |

Regulator Back Pressure:
E 7 mm/$H_2O$ with avg. swings of 6 Last 8 hrs
W 7 mm/$H_2O$ with avg. swings of 6 Last 8 hrs

Remarks: Push Side | Coke Side

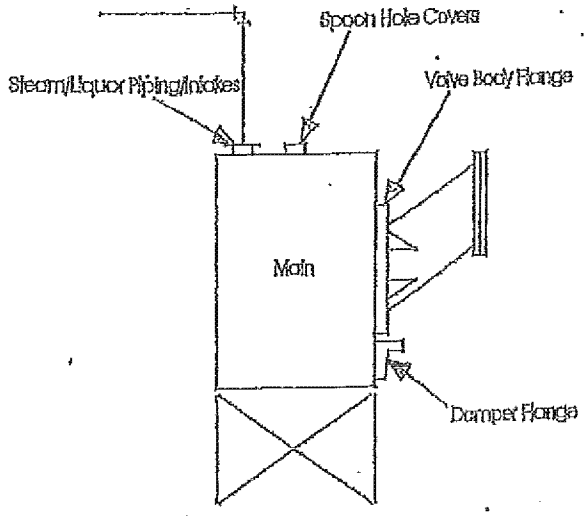


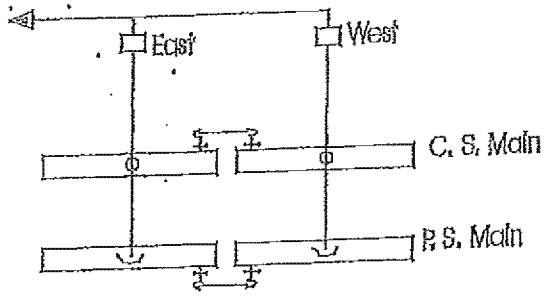

# DAILY REPORT
## ENVIRONMENTAL QUALITY MANAGEMENT, INC.
## A.K. STEEL, MIDDLETOWN WORKS

Date: 4/27/18

Location: Middletown C.P.

Inspector: Chaile Koelli

| | Battery | # Leaking | Total | % Leaking | % Allowable EPA Standards |
|---|---|---|---|---|---|
| Doors | Wilputte | 6 | 148 | 4.05 | 3.3% |
| Lids | Wilputte | 0 | 213 | 0 | 0.4% |
| Standpipes | Wilputte | 1 | 142 | .72 | 2.5% |

Observations (sec.)
Wilputte

8.5
23.0
15.0
10.5
7.0

Total: 64.0

Average: 12.8

12.0

Comments:

# Charging Inspection
## Environmental Quality Management, Inc.
## A K Steel, Middletown Works

Battery Wilputte

Co./EPA Personnel

Date: 4/27/18

Inspector: Chuck Kaelle

Shift: 7-3

Certification Expiration Date: N/A

Weather/Temp. Clear 68°

Start Time: 12:37 Hr:Min

End Time: 1:55 Hr:Min

Larry Car # LEAST

| Charge Number | Oven # | Start Time | End Time | Visible Emission Seconds | Visible Emission (a) +1 Second | Ln Ve's (a) +1 Second | Comments |
|---|---|---|---|---|---|---|---|
| 1 | 5 | 12:37 | 12:41 | 8.5 | | | |
| 2 | 7 | 12:55 | 1:00 | 23.0 | | | |
| 3 | 9 | 1:15 | 1:20 | 15.0 | | | |
| 4 | 11 | 1:33 | 1:38 | 10.5 | | | |
| 5 | 13 | 1:50 | 1:55 | 7.0 | | | |
| | | | | | | | |
| | | | | | | | |
| | | | | | | | |
| | | | | | | | |
| | | | | | | | |
| | Total 5 Charges | | | 64.0 | | | ÷5=y= |
| | Average | | | 12.8 | | | $(e^y)-1=(\quad)-1=$ |

[a] - For use only when computer printout is not included

# Topside Inspection
## Environmental Quality Management, Inc.
## A K Steel, Middletown Works

Battery: Wilputte  Oven Not Observed: _____  Co./EPA Personnel: _____

Date: 4/27/18  Inoperable Ovens: _____  Certification Expiration Date: N/A

Inspector: [signature]

Shift: 7.3

Start Time 12:25 Hr:Min  End Time 12:27 Hr:Min

Start Time 12:28 Hr:Min  End Time 12:30 Hr:Min

Start Time 12:31 Hr:Min  End Time 12:32 Hr:Min

**PS Off Pass**

Actual T 2 m 25 s = ____ sec.

Allowable T=(304 sec)+(10 sec² ____ )= ____ %

| Oven # | Push Side Offtakes | | | Comments |
|---|---|---|---|---|
| 5 | D | ~~I~~ | | |
| 7 | ~~D~~ | I | | |
| 9 | ~~D~~ | I | | |
| 12 | D | ~~I~~ | | |
| 20 | D | ~~I~~ | | |
| | D | I | | |
| | D | I | | |
| | D | I | | |
| | D | I | | |
| | D | I | | |
| | D | I | | |
| | D | I | | |

**CS Off Pass**

Actual T 2 m 18 s = ____ Sec

Allowable T=(304 sec)+(10 sec² ____ )= ____ %

| Oven # | Coke Side Offtakes | | | Comments |
|---|---|---|---|---|
| 5 | D | ~~I~~ | | |
| 7 | ~~D~~ | I | | |
| 9 | ~~D~~ | I | | |
| 12 | D | ~~I~~ | | |
| 20 | D | ~~I~~ | | |
| | D | I | | |
| 76 | D | I | | R |
| | D | I | | |
| | D | I | | |
| | D | I | | |
| | D | I | | |
| | D | I | | |

**Charge Lid Pass**

Actual T 2 m 20 s = ____ sec

Allowable T=(304 sec)+(10 sec² ____ )= ____ %

| Oven # | Charge Lids | | | | | Comments |
|---|---|---|---|---|---|---|
| 5 | ~~D~~ | ~~I~~ | 1 | 2 | 3 | |
| 7 | ~~D~~ | I | 1 | 2 | 3 | |
| 9 | ~~D~~ | I | 1 | 2 | 3 | |
| 12 | D | ~~I~~ | 1 | 2 | 3 | |
| 20 | D | ~~I~~ | 1 | 2 | 3 | |
| | D | I | 1 | 2 | 3 | |
| | D | I | 1 | 2 | 3 | |
| | D | I | 1 | 2 | 3 | |
| | D | I | 1 | 2 | 3 | |
| | D | I | 1 | 2 | 3 | |
| | D | I | 1 | 2 | 3 | |
| | D | I | 1 | 2 | 3 | |

D - Decarbonizing
I - Inoperable
B - Base Sand Seal
$F_H$ - Horizontal Flange
R - Riser Lid
G - Gooseneck
$F_V$ - Vertical Flange
V - Valve Body
3 - Observed Leak

$$PLL = \frac{\#\text{Leaking Lids}}{\#\text{Lids Observed}} = \frac{0}{228 - \underset{\text{In-op}}{6} - \underset{\text{LNO}}{9}} = \boxed{0\%} \text{ Lid Leaks} = 213$$

$$PLO = \frac{\#\text{Leaking Offtakes}}{\#\text{Offtakes Observed}} = \frac{1}{152 - \underset{\text{In-op OFF}}{4} - \underset{\text{ONO}}{6}} = \boxed{.72\%} \text{ Leaking Offtakes} = 142$$

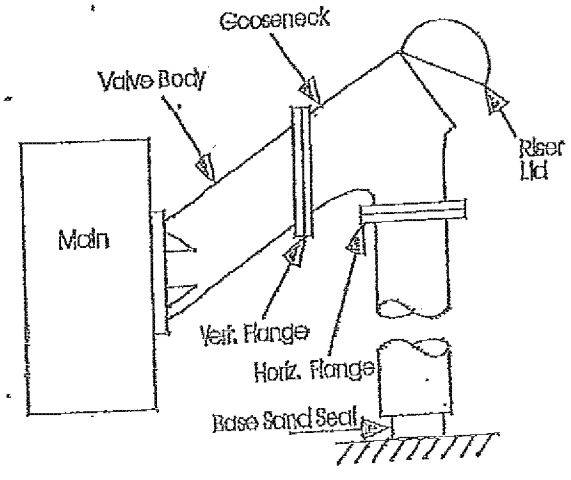


Total Lid Leaks: 0
Total Offtake Leaks: 1

# Door Inspection
## Environmental Quality Management, Inc.
## A K Steel, Middletown Works

Battery Wilputte  Door Not Observed _____  Co./EPA Personnel

Date: 4/27/18  Inoperable Ovens _____  Inspector: Charles Kuelle

Shift: 7-3  Certification Expiration Date N/A.

Start Time 2:00 Hr:Min  Start Time 2:10 Hr:Min
End Time 2:07 Hr:Min  End Time 2:18 Hr:Min

Actual T (Pusher Side) 3 m 00 s= ____ sec.  Actual T (Coke Side) 3 m 55 s= ____ sec.

Allowable T=(304 sec)+(10 sec* ____ )= ____ sec  Allowable T=(304 sec)+(10 sec* ____ )= ____ sec

| Oven # | Doors | | | Comments |
|---|---|---|---|---|
| | D | C | PU | |
| | D | C | PU | |
| | D | C | PU | |
| | D | C | PU | |
| | D | C | PU | |
| | D | C | PU | |
| | D | C | PU | |
| | D | C | PU | |
| | D | C | PU | |
| | D | C | PU | |
| | D | C | PU | |
| | D | C | PU | |
| | D | C | PU | |
| | D | C | PU | |
| | D | C | PU | |
| | D | C | PU | |
| | D | C | PU | |

| Oven # | Doors | | Comments |
|---|---|---|---|
| 3 | D | PU | |
| 30 | D | PU | |
| 36 | D | PU | |
| 60 | D | PU | |
| 66 | D | PU | |
| 76 | D | PU | |
| | D | PU | |
| | D | PU | |
| | D | PU | |
| | D | PU | |
| | D | PU | |
| | D | PU | |
| | D | PU | |
| | D | PU | |
| | D | PU | |
| | D | PU | |
| | D | PU | |
| | D | PU | |

D - Door  PU - Point Up  C - Chuck

Total Leaks = 0 (PS) + 6 (CS) = 6

Dob = 152 - 4 (Inoperable Doors) - 0 (DNC) = 148

PLD = Door Leaks / Dob = 6 / 148 = 4.05 % Door Leaks

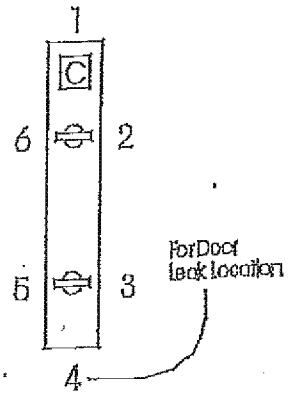

# A.K. Steel, Middletown Works

Battery: Wilputte

Co./EPA Personnel

Date: 4/27/18

Inspector: Charles Bell

Shift: 7-3

Calibration Expiration Date: N/A

| Source | Coke Side Leak Location | Push Side Leak Location | Comments |
|---|---|---|---|
| 1. Spoon Hole Covers | OK | OK | |
| 2. Valve Body Flange/Damper Flange | OK | OK | |
| 3. Crossovers (4)/Flare Stacks (4) | OK | OK | |
| 4. Liquor Piping/Intakes & Steam | OK | OK | |

Regulator Back Pressure:
E 7 mm/$H_2O$ with avg. swings of 6 Last 8 hrs
W 7 mm/$H_2O$ with avg. swings of 7 Last 8 hrs

Remarks:

Push Side

Coke Side

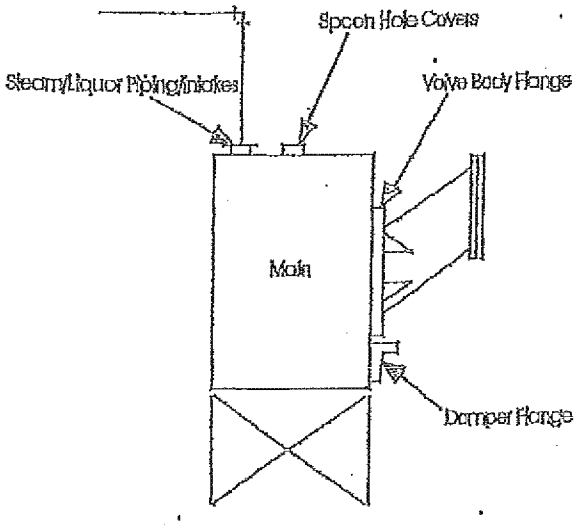


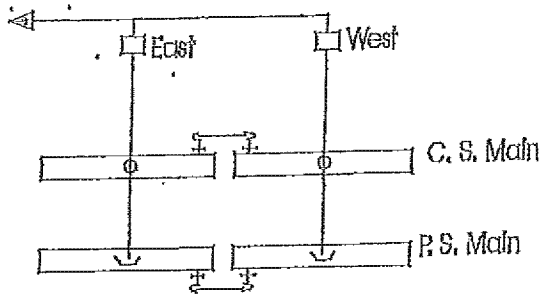

# DAILY REPORT
## ENVIRONMENTAL QUALITY MANAGEMENT, INC.
## A.K. STEEL, MIDDLETOWN WORKS

Date: 4/28/18

Location: Middletown C.P.

Inspector: Chuck Koller

| | Battery | # Leaking | Total | % Leaking | % Allowable EPA Standards |
|---|---|---|---|---|---|
| Doors | Wilputte | 3 | 148 | 2.03 | 3.3% |
| Lids | Wilputte | 1 | 219 | .48 | 0.4% |
| Standpipes | Wilputte | 1 | 146 | .72 | 2.5% |

| Observations (sec.) Wilputte |
|---|
| 3.0 |
| 4.5 |
| 6.0 |
| 5.0 |
| 6.5 |
| 25.0 |

Total: 5.0

Average: 12.0

Comments:

# Charging Inspection
## Environmental Quality Management, Inc.
## A.K Steel, Middletown Works

Battery: Wilputte

Date: 4/28/18

Shift: 7-3

Start Time: 11:24 Hr:Min

End Time: 12:41 Hr:Min

Larry Car #: EAST

Co./EPA Personnel

Inspector: Charles Kenda

Certification Expiration Date: N/A

Weather/Temp. CLOY 50°

| Charge Number | Oven # | Start Time | End Time | Visible Emission Seconds | Visible Emission (a) +1 Second | In Ye's (a) +1 Second | Comments |
|---|---|---|---|---|---|---|---|
| 1 | 28 | 1124 | 11:29 | 3.0 | | | |
| 2 | 30 | 11:38 | 11:43 | 4.5 | | | |
| 3 | 32 | 11:58 | 12:03 | 6.0 | | | |
| 4 | 34 | 12:18 | 12:23 | 5.0 | | | |
| 5 | 36 | 1236 | 12:41 | 6.5 | | | |
| | | | | | | | |
| | | | | | | | |
| | | | | | | | |
| | | | | | | | |
| | | | | | | | |
| | Total 5 Charges | | | 25.0 | | | ÷5=y= |
| | Average | | | 5.0 | | | (a)-1=( )-1= |

[a] - For use only when computer printout is not included

# Topside Inspection
## Environmental Quality Management, Inc.
## A K Steel, Middletown Works

Battery: Wilputte  Oven Not Observed: _____  Co./EPA Personnel: _____

Date: 4/28/18  Inoperable Ovens: _____  Certification Expiration Date: N/A

Shift: 7.3  Inspector: Chad Kuell

Start Time 11:13 Hr:Min  End Time 11:15 Hr:Min

Start Time 11:16 Hr:Min  End Time 11:18 Hr:Min

Start Time 11:19 Hr:Min  End Time 11:21 Hr:Min

**PS Off Pass**

Actual T 2 m 10 s = ____ sec.

Allowable T=(304 sec)+(10 sec* ____ )= ____ %

| Oven # | Push Side Offtakes | | Comments |
|---|---|---|---|
| 28 | D | I | |
| 12 | D | I | |
| 20 | D | I | |
| | D | I | |
| | D | I | |
| | D | I | |
| | D | I | |
| | D | I | |
| | D | I | |
| | D | I | |
| | D | I | |
| | D | I | |

**CS Off Pass**

Actual T 2 m 15 s = ____ sec

Allowable T=(304 sec)+(10 sec* ____ )= ____ %

| Oven # | Coke Side Offtakes | | Comments |
|---|---|---|---|
| 28 | D | I | |
| 12 | D | I | |
| 20 | D | I | |
| | D | I | |
| 16 | D | I | R |
| | D | I | |
| | D | I | |
| | D | I | |
| | D | I | |
| | D | I | |
| | D | I | |
| | D | I | |

**Charge Lid Pass**

Actual T 2 m 15 s = ____ sec

Allowable T=(304 sec)+(10 sec* ____ )= ____ %

| Oven # | Charge Lids | | | | | Comments |
|---|---|---|---|---|---|---|
| 28 | D | I | 1 | 2 | 3 | |
| 12 | D | I | 1 | 2 | 3 | |
| 20 | D | I | 1 | 2 | 3 | |
| | D | I | 1 | 2 | 3 | |
| 65 | D | I | 1 | 2 | 3 | |
| | D | I | 1 | 2 | 3 | |
| | D | I | 1 | 2 | 3 | |
| | D | I | 1 | 2 | 3 | |
| | D | I | 1 | 2 | 3 | |
| | D | I | 1 | 2 | 3 | |
| | D | I | 1 | 2 | 3 | |
| | D | I | 1 | 2 | 3 | |

D - Decarbonizing
I - Inoperable
B - Base Sand Seal
$F_H$ - Horizontal Flange
R - Riser Lid
G - Gooseneck
$F_V$ - Vertical Flange
V - Valve Body
3 - Observed Leak

$$PLL = \frac{\#\text{Leaking Lids}}{\#\text{Lids Observed}} = \frac{1}{228 - \underset{\text{In-op}}{6} - \underset{\text{LNO}}{3}} = \boxed{.48\%} \text{ Lid Leaks} = 219$$

$$PLO = \frac{\#\text{Leaking Offtakes}}{\#\text{Offtakes Observed}} = \frac{1}{152 - \underset{\text{In-op OBF}}{4} - \underset{\text{ONO}}{2}} = \boxed{.72\%} \text{ Leaking Offtakes} = 146$$

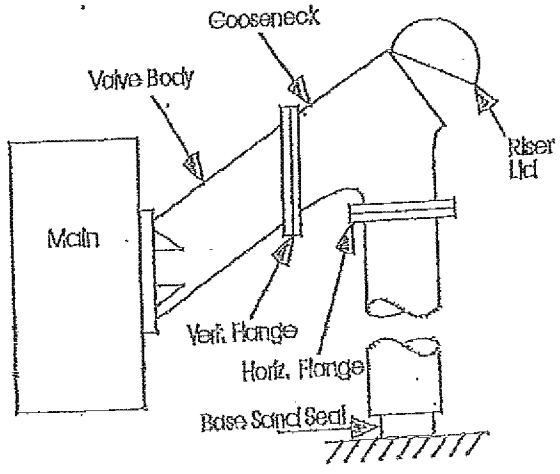


Total Lid Leaks: 1
Total Offtake Leaks: 1

# Door Inspection
## Environmental Quality Management, Inc.
## A.K. Steel, Middletown Works

Battery: Wilputte  Door Not Observed: _____  Co./IEPA Personnel: _____

Date: 4/28/18  Inoperable Ovens: _____  Inspector: Charles Kuhn

Shift: 7-7  Certification Expiration Date: N/A

Start Time: 10:50 Hr:Min  Start Time: 10:56 Hr:Min
End Time: 10:53 Hr:Min  End Time: 11:00 Hr:Min

**Pusher Side**

Actual T: 3 m 00 s= _____ sec.

Allowable T=(304 sec)+(10 sec* _____ )= _____ sec

| Oven # | Doors | | | Comments |
|---|---|---|---|---|
| | D | C | PU | |
| | D | C | PU | |
| | D | C | PU | |
| | D | C | PU | |
| | D | C | PU | |
| | D | C | PU | |
| | D | C | PU | |
| | D | C | PU | |
| | D | C | PU | |
| | D | C | PU | |
| | D | C | PU | |
| | D | C | PU | |
| | D | C | PU | |
| | D | C | PU | |
| | D | C | PU | |
| | D | C | PU | |
| | D | C | PU | |
| | D | C | PU | |
| | D | C | PU | |

**Coke Side**

Actual T: 3 m 30 s= _____ sec.

Allowable T=(304 sec)+(10 sec* _____ )= _____ sec

| Oven # | Doors | | Comments |
|---|---|---|---|
| 22 | D | PU | |
| 49 | D | PU | |
| 67 | D | PU | |
| | D | PU | |
| | D | PU | |
| | D | PU | |
| | D | PU | |
| | D | PU | |
| | D | PU | |
| | D | PU | |
| | D | PU | |
| | D | PU | |
| | D | PU | |
| | D | PU | |
| | D | PU | |
| | D | PU | |
| | D | PU | |
| | D | PU | |
| | D | PU | |

D - Door  PU - Point Up  C - Chuck

Total Leaks = 0 (PS) + 3 (CS) = 3

Dob = 152 - 4 (Inoperable Doors) - 0 (DNO) = 148

PLD = Door Leaks / Dob = 3 / 148 = 2.03 % Door Leaks

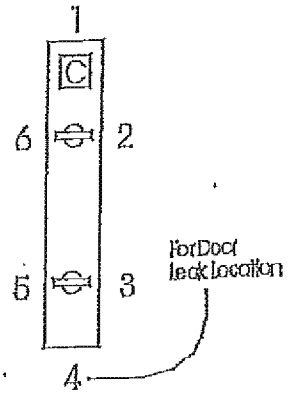

# A K Steel, Middletown Works

Battery Wilputte

Co./EPA Personnel

Date: 4/28/18

Inspector: Charles Kelli

Shift: 7-3

Certification Expiration Date: N/A

| Source | Coke Side Leak Location | Push Side Leak Location | Comments |
|---|---|---|---|
| 1. Spoon Hole Covers | OK | OK | |
| 2. Valve Body Flange/Damper Flange | OK | OK | |
| 3. Crossovers (4)/Flare Stacks (4) | OK | OK | |
| 4. Liquor Piping/Intakes & Steam | OK | OK | |

Regulator Back Pressure:
E 6 mm/$H_2O$ with avg. swings of 6 Last 8 hrs
W 6 mm/$H_2O$ with avg. swings of 6 Last 8 hrs

Remarks: Push Side Coke Side

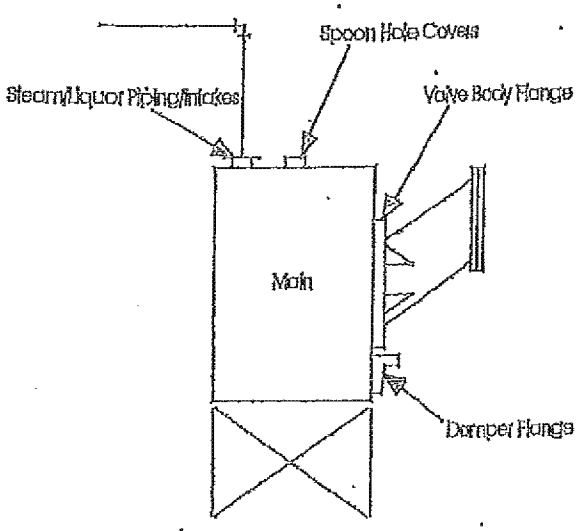


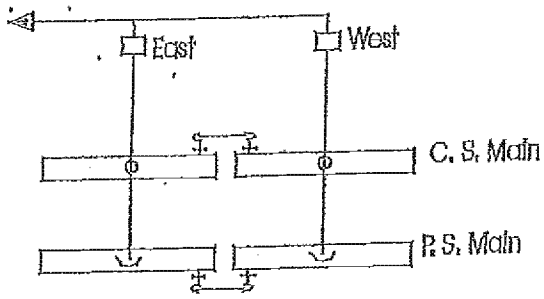

# DAILY REPORT
## ENVIRONMENTAL QUALITY MANAGEMENT, INC.
## A K STEEL, MIDDLETOWN WORKS

Date: 4/29/18

Location: Middletown C.P.

Inspector: Charles Kaeller

| | Battery | # Leaking | Total | % Leaking | % Allowable EPA Standards |
|---|---|---|---|---|---|
| Doors | Wilputte | 4 | 148 | 2.70 | 3.3% |
| Lids | Wilputte | 0 | 219 | 0 | 0.4% |
| Standpipes | Wilputte | 0 | 146 | 0 | 2.5% |

| | Observations (sec.) Wilputte |
|---|---|
| | 6.5 |
| | 22.0 |
| | 13.0 |
| | 17.0 |
| | 7.0 |
| | 65.5 |
| Total: | 13.1 |

Average: 12.0

Comments:

# Charging Inspection
## Environmental Quality Management, Inc.
## A K Steel, Middletown Works

Battery Wilputte

Co./EPA Personnel

Inspector: Charles Kuhn

Date: 4/29/18

Certification Expiration Date: N/A

Shift: 7-3

Weather/Temp. Clear 50°

Start Time: 11:17 Hr:Min
End Time: 12:39 Hr:Min
Larry Car #: EA-55

| Charge Number | Oven # | Start Time | End Time | Visible Emission Seconds | Visible Emission (a) +1 Second | Im Ve's (a) +1 Second | Comments |
|---|---|---|---|---|---|---|---|
| 1 | 53 | 11:17 | 11:22 | 6.5 | | | |
| 2 | 55 | 11:32 | 11:39 | 22.0 | | | |
| 3 | 57 | 11:48 | 11:53 | 13.0 | | | |
| 4 | 59 | 12:06 | 12:11 | 17.0 | | | |
| 5 | 61 | 12:34 | 12:39 | 7.0 | | | |
| | | | | | | | |
| | | | | | | | |
| | | | | | | | |
| | | | | | | | |
| | | | | | | | |
| | Total 5 Charges | | | 65.5 | | | +5=y= |
| | Average | | | 13.1 | | | $(e^y)-1=(\quad)-1=$ |

[a] - For use only when computer printout is not included

# Topside Inspection
## Environmental Quality Management, Inc.
## A K Steel, Middletown Works

Battery: Wilputte  Oven Not Observed: _____  Co./EPA Personnel: _____

Date: 4/29/18  Inoperable Ovens: _____  Certification Expiration Date: N/A

Shift: 7.3  Inspector: [signature]

Start Time 11:06 Hr:Min  End Time 11:08 Hr:Min

Start Time 11:09 Hr:Min  End Time 11:11 Hr:Min

Start Time 11:12 Hr:Min  End Time 11:15 Hr:Min

**PS Off Pass**
Actual T 2 m 25 s = ____ sec.
Allowable T=(304 sec)+(10 sec* ____ )= ____ %

| Oven # | Push Side Offtakes | | Comments |
|---|---|---|---|
| 53 | D | I | |
| 12 | D | I | |
| 20 | D | I | |
| | D | I | |
| | D | I | |
| | D | I | |
| | D | I | |
| | D | I | |
| | D | I | |
| | D | I | |
| | D | I | |
| | D | I | |

**CS Off Pass**
Actual T 2 m 15 s = ____ sec
Allowable T=(304 sec)+(10 sec* ____ )= ____ %

| Oven # | Coke Side Offtakes | | Comments |
|---|---|---|---|
| 53 | D | I | |
| 12 | D | I | |
| 20 | D | I | |
| | D | I | |
| | D | I | |
| | D | I | |
| | D | I | |
| | D | I | |
| | D | I | |
| | D | I | |
| | D | I | |
| | D | I | |

**Charge Lid Pass**
Actual T 2 m 20 s = ____ sec
Allowable T=(304 sec)+(10 sec* ____ )= ____ %

| Oven # | Charge Lids | | | | | Comments |
|---|---|---|---|---|---|---|
| 53 | D | I | 1 | 2 | 3 | |
| 12 | D | I | 1 | 2 | 3 | |
| 20 | D | I | 1 | 2 | 3 | |
| | D | I | 1 | 2 | 3 | |
| | D | I | 1 | 2 | 3 | |
| | D | I | 1 | 2 | 3 | |
| | D | I | 1 | 2 | 3 | |
| | D | I | 1 | 2 | 3 | |
| | D | I | 1 | 2 | 3 | |
| | D | I | 1 | 2 | 3 | |
| | D | I | 1 | 2 | 3 | |
| | D | I | 1 | 2 | 3 | |

D - Decarbonizing
I - Inoperable
B - Base Sand Seal
$F_H$ - Horizontal Flange
R - Riser Lid
G - Gooseneck
$F_V$ - Vertical Flange
V - Valve Body
3 - Observed Leak

$$PLL = \frac{\#\text{Leaking Lids}}{\#\text{Lids Observed}} = \frac{0}{228 - \underset{\text{In-op}}{6} - \underset{\text{LNO}}{3}} = \boxed{0\%} \text{ Lid Leaks} = 219$$

$$PLO = \frac{\#\text{Leaking Offtakes}}{\#\text{Offtakes Observed}} = \frac{0}{152 - \underset{\text{In-op OFF}}{4} - \underset{\text{ONO}}{2}} = \boxed{0\%} \text{ Leaking Offtakes} = 146$$

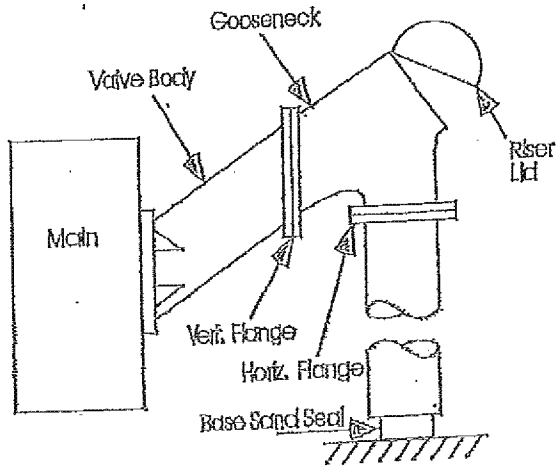


Total Lid Leaks: 0
Total Offtake Leaks: 0

# Door Inspection
## Environmental Quality Management, Inc.
## A.K. Steel, Middletown Works

Battery: Wilputte  Door Not Observed: _____  Co./EPA Personnel: _____

Date: 4/29/18  Inoperable Ovens: _____  Inspector: Charlie Kuc

Shift: 7-3  Certification Expiration Date: N/A

Start Time: 10:40 Hr:Min  Start Time: 10:47 Hr:Min
End Time: 10:43 Hr:Min  End Time: 10:51 Hr:Min

**Pusher Side**
Actual T: 3 m 00 s = _____ sec.
Allowable T=(304 sec)+(10 sec* _____ )= _____ sec

**Coke Side**
Actual T: 3 m 40 s = _____ sec.
Allowable T=(304 sec)+(10 sec* _____ )= _____ sec

| Oven # | Doors | | | Comments |
|---|---|---|---|---|
| | D | C | PU | |
| | D | C | PU | |
| | D | C | PU | |
| | D | C | PU | |
| | D | C | PU | |
| | D | C | PU | |
| | D | C | PU | |
| | D | C | PU | |
| | D | C | PU | |
| | D | C | PU | |
| | D | C | PU | |
| | D | C | PU | |
| | D | C | PU | |
| | D | C | PU | |
| | D | C | PU | |
| | D | C | PU | |
| | D | C | PU | |
| | D | C | PU | |
| | D | C | PU | |

| Oven # | Doors | | Comments |
|---|---|---|---|
| 18 | D | ~~PU~~ | |
| 21 | D | ~~PU~~ | |
| 21 | D | ~~PU~~ | |
| 39 | D | ~~PU~~ | |
| | D | PU | |
| | D | PU | |
| | D | PU | |
| | D | PU | |
| | D | PU | |
| | D | PU | |
| | D | PU | |
| | D | PU | |
| | D | PU | |
| | D | PU | |
| | D | PU | |
| | D | PU | |
| | D | PU | |
| | D | PU | |
| | D | PU | |

D - Door  PU - Point Up  C - Chuck

Total Leaks = 0 (PS) + 4 (CS) = 4

Dob = 152 - 4 (Inoperable Doors) - 0 (DNO) = 148

PLD = Door Leaks / Dob = 4 / 148 = 2.70 % Door Leaks

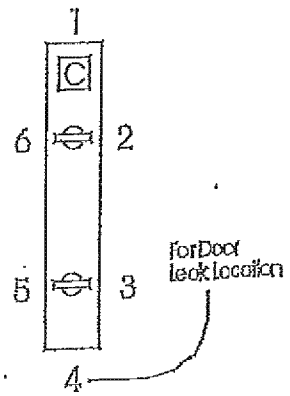

# AK Steel, Middletown Works

Battery: Wilputte

Co./BPA Personnel: /

Date: 4/29/18

Inspector: [illegible signature]

Shift: 7-3

Certification Expiration Date: N/A

| Source | Coke Side Leak Location | Push Side Leak Location | Comments |
|---|---|---|---|
| 1. Spoon Hole Covers | O/K | O/K | |
| 2. Valve Body Flange/Damper Flange | O/K | O/K | |
| 3. Crossovers (4)/Flare Stacks (4) | O/K | O/K | |
| 4. Liquor Piping/Intakes & Steam | O/K | O/K | |

Regulator Back Pressure:

| | | | | | |
|---|---|---|---|---|---|
| E | 6 | mm/$H_2O$ with avg. swings of | 6 | | Last 8 hrs |
| W | 7 | mm/$H_2O$ with avg. swings of | 6 | | Last 8 hrs |

Remarks:

Push Side

Coke Side

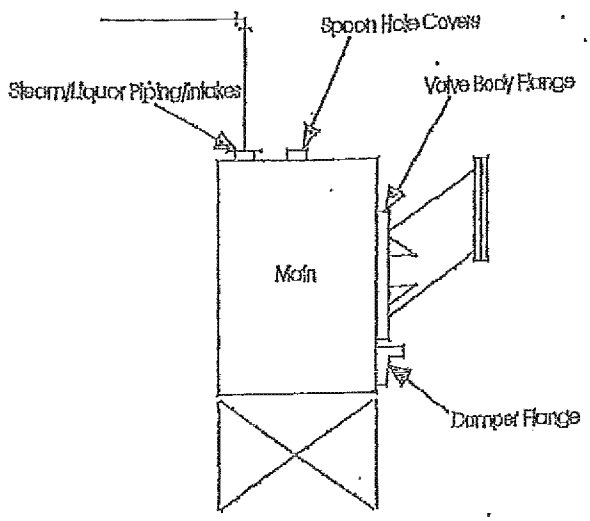


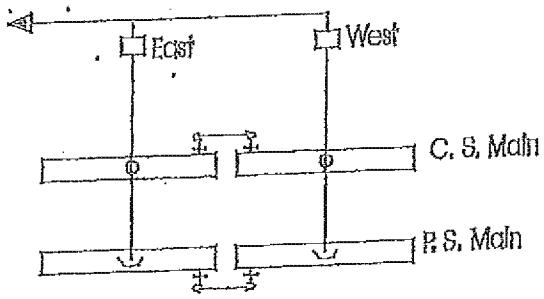

# DAILY REPORT
## ENVIRONMENTAL QUALITY MANAGEMENT, INC.
## A.K. STEEL, MIDDLETOWN WORKS

Date: 4/30/18

Location: Middletown C.P.

Inspector: Chuck Kaelle

| | Battery | # Leaking | Total | % Leaking | % Allowable EPA Standards |
|---|---|---|---|---|---|
| Doors | Wilputte | 4 | 148 | 2.70 | 3.3% |
| Lids | Wilputte | 1 | 219 | .47 | 0.4% |
| Standpipes | Wilputte | 2 | 146 | 1.41 | 2.5% |

Observations (sec.)
Wilputte

24.5
10.5
8.0
5.0
8.0

53.0

Total: 10.6

12.0

Average:

Comments:

# Charging Inspection
## Environmental Quality Management, Inc.
## A K Steel, Middletown Works

Battery Wilputte

Co./EPA Personnel

Date: 4/30/18

Inspector: [signature]

Shift: 7.3

Certification Expiration Date: N/A

Weather/Temp. Clear 63°

Start Time: 11:28 Hr:Min
End Time: 12:40 Hr:Min
Larry Car # EAST

| Charge Number | Oven # | Start Time | End Time | Visible Emission Seconds | Visible Emission (a) +1 Second | Ln Ve's (a) +1 Second | Comments |
|---|---|---|---|---|---|---|---|
| 1 | 7 | 11:28 | 11:33 | 24.5 | | | |
| 2 | 9 | 11:44 | 11:49 | 10.5 | | | |
| 3 | 11 | 11:58 | 12:03 | 8.0 | | | |
| 4 | 13 | 12:22 | 12:27 | 5.0 | | | |
| 5 | 15 | 12:38 | 12:40 | 8.0 | | | |
| | | | | | | | |
| | | | | | | | |
| | | | | | | | |
| | | | | | | | |
| | | | | | | | |
| | Total 5 Charges | | | 53.0 | | | ÷5=y= |
| | Average | | | 10.6 | | | $(e^y)-1=(\quad)-1=$ |

a - For use only when computer printout is not included

# Topside Inspection
## Environmental Quality Management, Inc.
## A. K. Steel, Middletown Works

Battery: Wilputte  Oven Not Observed: _____  Co./EPA Personnel: _____

Date: 4/30/18  Inoperable Ovens: _____  Certification Expiration Date: N/A

Inspector: Charles Kasle

Shift: 7-3

Start Time 11:17 Hr:Min  End Time 11:19 Hr:Min

Start Time 11:20 Hr:Min  End Time 11:22 Hr:Min

Start Time 11:23 Hr:Min  End Time 11:25 Hr:Min

**PS Off Pass**

Actual T 2 m 20 s = ____ sec.

Allowable T=(304 sec)+(10 sec* ____ )= ____ %

| Oven # | Push Side Offtakes | | | Comments |
|---|---|---|---|---|
| 7 | ~~D~~ | I | | |
| 12 | D | ~~I~~ | | |
| 20 | D | ~~I~~ | | |
| | D | I | | |
| | D | I | | |
| | D | I | | |
| | D | I | | |
| | D | I | | |
| | D | I | | |
| | D | I | | |
| | D | I | | |
| | D | I | | |

**CS Off Pass**

Actual T 2 m 20 s = ____ sec

Allowable T=(304 sec)+(10 sec* ____ )= ____ %

| Oven # | Coke Side Offtakes | | | Comments |
|---|---|---|---|---|
| 7 | ~~D~~ | I | | |
| 12 | D | ~~I~~ | | |
| 20 | D | ~~I~~ | | |
| | D | I | | |
| 1 | D | I | | R |
| | D | I | | |
| 38 | D | I | | R |
| | D | I | | |
| | D | I | | |
| | D | I | | |
| | D | I | | |
| | D | I | | |

**Charge Lid Pass**

Actual T 2 m 25 s = ____ sec

Allowable T=(304 sec)+(10 sec* ____ )= ____ %

| Oven # | Charge Lids | | | | | Comments |
|---|---|---|---|---|---|---|
| 7 | ~~D~~ | I | 1 | 2 | 3 | |
| 12 | D | ~~I~~ | 1 | 2 | 3 | |
| 20 | D | ~~I~~ | 1 | 2 | 3 | |
| | D | I | 1 | 2 | 3 | |
| 66 | D | I | ~~1~~ | 2 | 3 | |
| | D | I | 1 | 2 | 3 | |
| | D | I | 1 | 2 | 3 | |
| | D | I | 1 | 2 | 3 | |
| | D | I | 1 | 2 | 3 | |
| | D | I | 1 | 2 | 3 | |
| | D | I | 1 | 2 | 3 | |
| | D | I | 1 | 2 | 3 | |

D - Decarbonizing
I - Inoperable
B - Base Sand Seal
$F_H$ - Horizontal Flange
R - Riser Lid
G - Gooseneck
$F_V$ - Vertical Flange
V - Valve Body
3 - Observed Leak

$$PLL = \frac{\#\text{Leaking Lids}}{\#\text{Lids Observed}} = \frac{1}{228 - \underset{\text{In-op}}{6} - \underset{\text{LNO}}{3}} = \boxed{.42\%} \text{ Lid Leaks} = 219$$

$$PLO = \frac{\#\text{Leaking Offtakes}}{\#\text{Offtakes Observed}} = \frac{2}{152 - \underset{\text{In-op OFF}}{4} - \underset{\text{ONO}}{2}} = \boxed{1.41\%} \text{ Leaking Offtakes} = 146$$

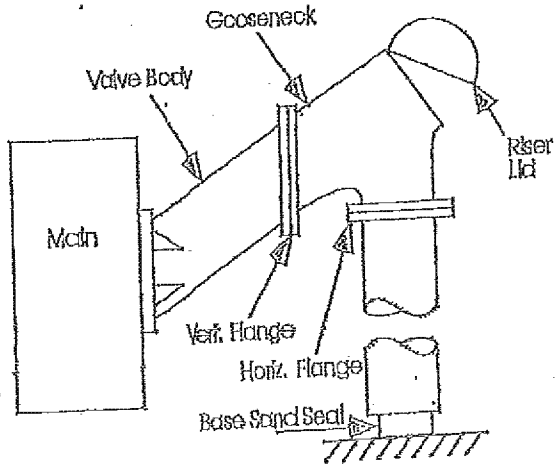


Total Lid Leaks: 1
Total Offtake Leaks: 2

# Door Inspection
## Environmental Quality Management, Inc.
## A.K Steel, Middletown Works

Battery: Wilpulle  Door Not Observed: _____  Co./BPA Personnel: _____

Date: 4/30/18  Inoperable Ovens: _____  Inspector: Chuck Kiele

Shift: 7-3  Certification Expiration Date: N/A

Start Time: 10:53 Hr:Min  End Time: 10:56 Hr:Min

Start Time: 11:00 Hr:Min  End Time: 11:04 Hr:Min

**Pusher Side**

Actual T _____ m _____ s= _____ sec.

Allowable T=(304 sec)+(10 sec* _____ )= _____ sec

| Oven # | Doors | | | Comments |
|---|---|---|---|---|
| | D | C | PU | |
| | D | C | PU | |
| | D | C | PU | |
| | D | C | PU | |
| | D | C | PU | |
| | D | C | PU | |
| | D | C | PU | |
| | D | C | PU | |
| | D | C | PU | |
| | D | C | PU | |
| | D | C | PU | |
| | D | C | PU | |
| | D | C | PU | |
| | D | C | PU | |
| | D | C | PU | |
| | D | C | PU | |
| | D | C | PU | |
| | D | C | PU | |
| | D | C | PU | |

**Coke Side**

Actual T _____ m _____ s= _____ sec.

Allowable T=(304 sec)+(10 sec* _____ )= _____ sec

| Oven # | Doors | | Comments |
|---|---|---|---|
| 3 | D | PU | |
| 34 | D | PU | |
| 42 | D | PU | |
| 66 | D | PU | |
| | D | PU | |
| | D | PU | |
| | D | PU | |
| | D | PU | |
| | D | PU | |
| | D | PU | |
| | D | PU | |
| | D | PU | |
| | D | PU | |
| | D | PU | |
| | D | PU | |
| | D | PU | |
| | D | PU | |
| | D | PU | |
| | D | PU | |

D - Door  PU - Point Up  C - Chuck

Total Leaks = 0 (PS) + 4 (CS) = 4

Doh = 152 - 4 (Inoperable Doors) - 0 (DNO) = 148

PLD = Door Leaks / Doh = 4 / 148 = 2.70 % Door Leaks

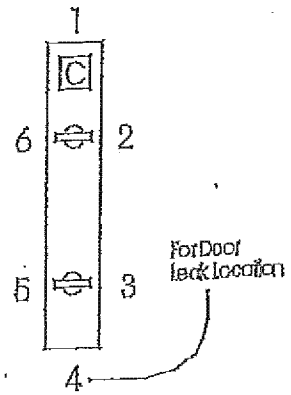

# A.K Steel, Middletown Works

Battery: Wilputte

Co./EPA Personnel: ____

Date: 4/30/18

Inspector: Charlie Kell

Shift: 7-3

Certification Expiration Date: N/A

| Source | Coke Side Leak Location | Push Side Leak Location | Comments |
|---|---|---|---|
| 1. Spoon Hole Covers | OK | OK | |
| 2. Valve Body Flange/Damper Flange | OK | OK | |
| 3. Crossovers (4)/Flare Stacks (4) | OK | OK | |
| 4. Liquor Piping/Intakes & Steam | OK | OK | |

Regulator Back Pressure: E 6 mm/$H_2O$ with avg. swings of 6 ____ Last 8 hrs

W 6 mm/$H_2O$ with avg. swings of 6 ____ Last 8 hrs

Remarks: Push Side ____ Coke Side ____

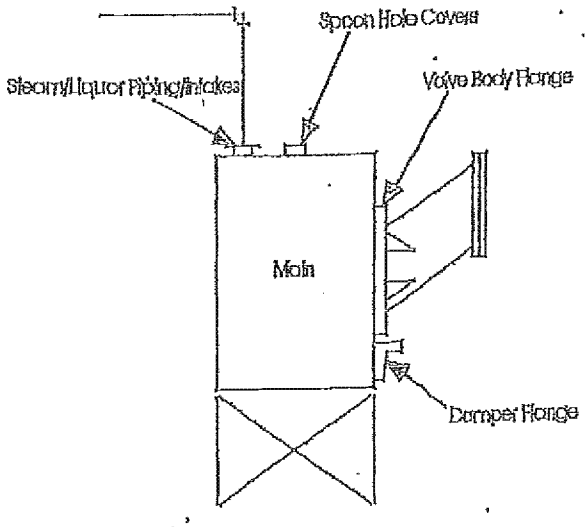


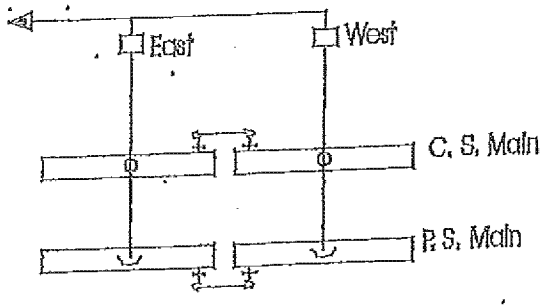

# DAILY REPORT
## ENVIRONMENTAL QUALITY MANAGEMENT, INC.
## A.K. STEEL, MIDDLETOWN WORKS

Date: 5/1/18

Location: Middletown C.P.

Inspector: Chuck Koelle

| | Battery | # Leaking | Total | % Leaking | % Allowable EPA Standards |
|---|---|---|---|---|---|
| Doors | Wilputte | 4 | 148 | 2.70 | 3.3% |
| Lids | Wilputte | 0 | 213 | 0 | 0.4% |
| Standpipes | Wilputte | 0 | 142 | 0 | 2.5% |

Observations (sec.)
Wilputte

6.5
8.5
10.0
5.0
41.5

71.5

Total: 14.3

Average: 12.0

Comments:

# Charging Inspection
## Environmental Quality Management, Inc.
## A.K. Steel, Middletown Works

Battery: Wilputte

Date: 5/1/18

Shift: 7-3

Start Time: 1:21 Hr:Min

End Time: 2:24 Hr:Min

Larry Car #: EAST

Co./EPA Personnel

Inspector: Mark Krull

Certification Expiration Date: N/A

Weather/Temp.: clear 70°

| Charge Number | Oven # | Start Time | End Time | Visible Emission Seconds | Visible Emission (a) +1 Second | In Ve's (a) +1 Second | Comments |
|---|---|---|---|---|---|---|---|
| 1 | 50 | 1:21 | 1:26 | 6.5 | | | |
| 2 | 52 | 1:36 | 1:41 | 8.5 | | | |
| 3 | 54 | 1:48 | 1:53 | 10.0 | | | |
| 4 | 56 | 2:01 | 2:06 | 5.0 | | | |
| 5 | 58 | 2:17 | 2:24 | 41.5 | | | |
| | | | | | | | |
| | | | | | | | |
| | | | | | | | |
| | | | | | | | |
| | | | | | | | |
| | | | | | | | ÷5=y= |
| | Total 5 Charges | | | 71.5 | | | |
| | Average | | | 14.3 | | | (a²)-1=( )-1= |

[a] - For use only when computer printout is not included

# Topside Inspection
## Environmental Quality Management, Inc.
## A.K Steel, Middletown Works

Battery: Wilputte  Oven Not Observed: _____  Co./BPA Personnel: _____

Certification Expiration Date: N/A

Date: 5/1/18  Inoperable Ovens: _____  Inspector: Charles Keall

Shift: 7-3

| PS Off Pass | CS Off Pass | Charge Lid Pass |
|---|---|---|
| Start Time 1:11 Hr:Min | Start Time 1:14 Hr:Min | Start Time 1:17 Hr:Min |
| End Time 1:13 Hr:Min | End Time 1:16 Hr:Min | End Time 1:20 Hr:Min |
| Actual T 2 m 25 s = ____ sec | Actual T 2 m 15 s = ____ sec | Actual T 2 m 20 s = ____ sec |
| Allowable T=(304 sec)+(10 sec* ____ )= ____ % | Allowable T=(304 sec)+(10 sec* ____ )= ____ % | Allowable T=(304 sec)+(10 sec* ____ )= ____ % |

| Oven # | Push Side Offtakes | | Comments |
|---|---|---|---|
| 50 | ~~D~~ | I | |
| 52 | ~~D~~ | I | |
| 54 | ~~D~~ | I | |
| 12 | D | ~~I~~ | |
| 20 | D | ~~I~~ | |
| | D | I | |
| | D | I | |
| | D | I | |
| | D | I | |
| | D | I | |
| | D | I | |
| | D | I | |

| Oven # | Coke Side Offtakes | | Comments |
|---|---|---|---|
| 50 | D | ~~I~~ | |
| 52 | ~~D~~ | I | |
| 54 | ~~D~~ | I | |
| 12 | D | ~~I~~ | |
| 20 | D | ~~I~~ | |
| | D | I | |
| | D | I | |
| | D | I | |
| | D | I | |
| | D | I | |
| | D | I | |
| | D | I | |

| Oven # | Charge Lids | | | | | Comments |
|---|---|---|---|---|---|---|
| 50 | ~~D~~ | I | 1 | 2 | 3 | |
| 52 | ~~D~~ | I | 1 | 2 | 3 | |
| 54 | ~~D~~ | I | 1 | 2 | 3 | |
| 12 | D | ~~I~~ | 1 | 2 | 3 | |
| 20 | D | ~~I~~ | 1 | 2 | 3 | |
| | D | I | 1 | 2 | 3 | |
| | D | I | 1 | 2 | 3 | |
| | D | I | 1 | 2 | 3 | |
| | D | I | 1 | 2 | 3 | |
| | D | I | 1 | 2 | 3 | |
| | D | I | 1 | 2 | 3 | |
| | D | I | 1 | 2 | 3 | |

D - Decarbonizing
I - Inoperable
B - Base Sand Seal
$H_H$ - Horizontal Flange
R - Riser Lid
G - Gooseneck
$H_V$ - Vertical Flange
V - Valve Body
3 - Observed Leak

PLL = #Leaking Lids / #Lids Observed = 0 / 228 - 6 (In-op) - 9 (LNO) = 0 / 213 = 0% Lid Leaks

PLO = #Leaking Offtakes / # Offtakes Observed = 6 / 152 - 4 (In-op OFF) - 6 (ONO) = 6 / 142 = 0% Leaking Offtakes

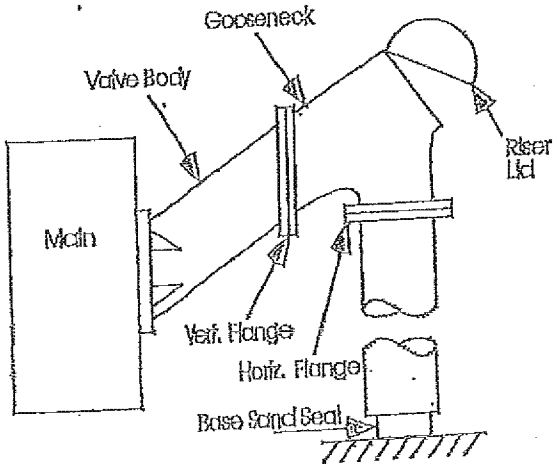


Total Lid Leaks: 0
Total Offtake Leaks: 0

# Door Inspection
## Environmental Quality Management, Inc.
## A.K. Steel, Middletown Works

Battery: Wilpulte  Door Not Observed: _____  Co./HPA Personnel: _____

Date: 7/1/18  Inoperable Ovens: _____  Inspector: [signature]

Shift: 2-3  Certification Expiration Date: N/A

Start Time 2:33 Hr:Min  End Time 2:35 Hr:Min

Start Time 2:39 Hr:Min  End Time 2:43 Hr:Min

Pusher Side

Actual T 3 m 00 s= _____ sec.

Allowable T=(304 sec)+(10 sec* _____ )= _____ sec

Coke Side

Actual T 3 m 40 s= _____ sec.

Allowable T=(304 sec)+(10 sec* _____ )= _____ sec

| Oven # | Doors | | | Comments |
|---|---|---|---|---|
| | D | C | PU | |
| | D | C | PU | |
| | D | C | PU | |
| | D | C | PU | |
| | D | C | PU | |
| | D | C | PU | |
| | D | C | PU | |
| | D | C | PU | |
| | D | C | PU | |
| | D | C | PU | |
| | D | C | PU | |
| | D | C | PU | |
| | D | C | PU | |
| | D | C | PU | |
| | D | C | PU | |
| | D | C | PU | |
| | D | C | PU | |
| | D | C | PU | |
| | D | C | PU | |

| Oven # | Doors | | Comments |
|---|---|---|---|
| 22 | D | ~~PU~~ | |
| 28 | D | ~~PU~~ | |
| 40 | D | ~~PU~~ | |
| 44 | D | ~~PU~~ | |
| | D | PU | |
| | D | PU | |
| | D | PU | |
| | D | PU | |
| | D | PU | |
| | D | PU | |
| | D | PU | |
| | D | PU | |
| | D | PU | |
| | D | PU | |
| | D | PU | |
| | D | PU | |
| | D | PU | |
| | D | PU | |
| | D | PU | |

D - Door  PU - Point Up  C - Chuck

Total Leaks = 0 (PS) + 4 (CS) = 4

Doh = 152 - 4 (Inoperable Doors) - 0 (DNO) = 148

PLD = Door Leaks / Doh = 4 / 148 = 2.70 % Door Leaks

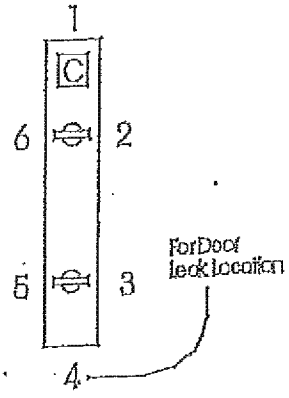

# A K Steel, Middletown Works

Battery Wilputte

Co./EPA Personnel

Date: 6/1/19

Inspector: Charle Karle

Shift: 7.3

Certification Expiration Date: N/A

| Source | Coke Side Leak Location | Push Side Leak Location | Comments |
|---|---|---|---|
| 1. Spoon Hole Covers | 0/5 | 0/5 | |
| 2. Valve Body Flange/Damper Flange | 0/1 | 0/0 | |
| 3. Crossovers (4)/Flare Stacks (4) | 0/5 | 0/0 | |
| 4. Liquor Piping/Intakes & Steam | 0/0 | 0/0 | |

Regulator Back Pressure:
E 7 mm/$H_2O$ with avg. swings of 6 Last 8 hrs
W 7 mm/$H_2O$ with avg. swings of 6 Last 8 hrs

Remarks: Push Side Coke Side

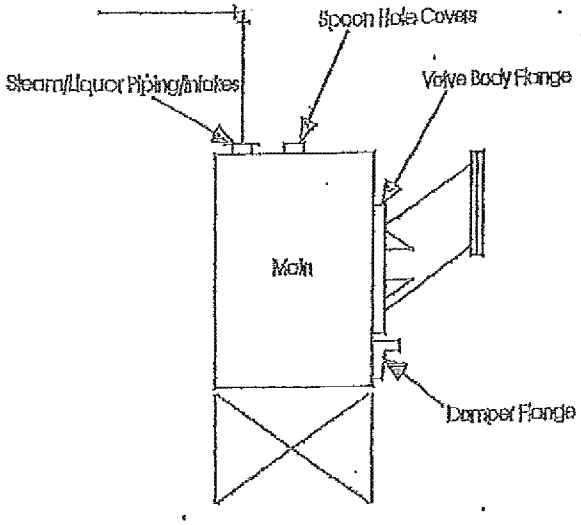


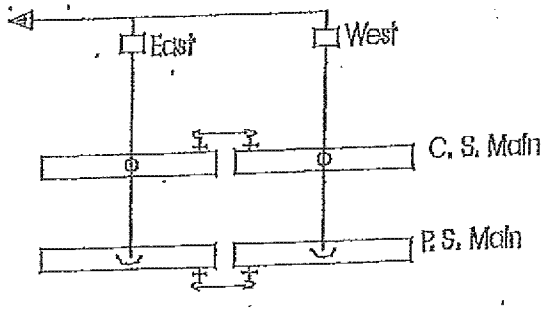

# DAILY REPORT
## ENVIRONMENTAL QUALITY MANAGEMENT, INC.
## A K STEEL, MIDDLETOWN WORKS

Date: 5/2/18

Location: Middletown C.P.

Inspector: Claude Boelle

| | Battery | # Leaking | Total | % Leaking | % Allowable EPA Standards |
|---|---|---|---|---|---|
| Doors | Wilputte | 5 | 150 | 3.33 | 3.3% |
| Lids | Wilputte | 2 | 216 | .94 | 0.4% |
| Standpipes | Wilputte | 0 | 144 | 0 | 2.5% |

Observations (sec.)
Wilputte

10.0
9.5
70.5
10.0
7.0

107.0

Total: 214

12.0

Average:

Comments:

# Charging Inspection
## Environmental Quality Management, Inc.
## A K Steel, Middletown Works

Battery Wilputte

Co./EPA Personnel

Inspector: [signature]

Date: 6/2/18

Certification Expiration Date: N/A

Shift: 7-3

Weather/Temp. Clear 86°

Start Time: 3:45 Hr:Min

End Time: 5:41 Hr:Min

Larry Car # EAST

| Charge Number | Oven # | Start Time | End Time | Visible Emission Seconds | Visible Emission (a) +1 Second | Ln Ve's (a) +1 Second | Comments |
|---|---|---|---|---|---|---|---|
| 1 | 4 | 3:45 | 3:50 | 10.0 | | | |
| 2 | 6 | 4:05 | 4:10 | 9.5 | | | |
| 3 | 8 | 4:30 | 4:53 | 70.5 | | | |
| 4 | 10 | 5:13 | 5:18 | 10.0 | | | #2 out for Repair |
| 5 | 14 | 5:36 | 5:41 | 7.0 | | | |
| | | | | | | | |
| | | | | | | | |
| | | | | | | | |
| | | | | | | | |
| | | | | | | | |
| | Total 5 Charges | | | 107.0 | | | ÷5=y= |
| | Average | | | 21.4 | | | $(e^y)$-1=( )-1= |

* - For use only when computer printout is not included

# Topside Inspection
## Environmental Quality Management, Inc.
## A K Steel, Middletown Works

Battery: Wilputte  Oven Not Observed: _____  Co./EPA Personnel: 1

Date: 5/2/18  Inoperable Ovens: _____  Certification Expiration Date: N/A

Inspector: Chuck Kuehl

Shift: 7.3

Start Time 3:06 Hr:Min  End Time 3:08 Hr:Min

Start Time 3:11 Hr:Min  End Time 3:13 Hr:Min

Start Time 3:16 Hr:Min  End Time 3:18 Hr:Min

**PS Off Pass**

Actual T 2 m 25 s= ____ sec.

Allowable T=(304 sec)+(10 sec* ____ )= ____ %

| Oven # | Push Side Offtakes | | Comments |
|---|---|---|---|
| 4 | ~~D~~ | I | |
| 6 | ~~D~~ | I | |
| 8 | ~~D~~ | I | |
| 20 | D | ~~I~~ | |
| | D | I | |
| | D | I | |
| | D | I | |
| | D | I | |
| | D | I | |
| | D | I | |
| | D | I | |
| | D | I | |

**CS Off Pass**

Actual T 2 m 20 s= ____ Sec

Allowable T=(304 sec)+(10 sec* ____ )= ____ %

| Oven # | Coke Side Offtakes | | Comments |
|---|---|---|---|
| 4 | ~~D~~ | I | |
| 6 | ~~D~~ | I | |
| 8 | ~~D~~ | I | |
| 20 | D | ~~I~~ | |
| | D | I | |
| | D | I | |
| | D | I | |
| | D | I | |
| | D | I | |
| | D | I | |
| | D | I | |
| | D | I | |

**Charge Lid Pass**

Actual T 2 m 21 s= ____ sec

Allowable T=(304 sec)+(10 sec* ____ )= ____ %

| Oven # | Charge Lids | | | | | Comments |
|---|---|---|---|---|---|---|
| 4 | ~~D~~ | I | 1 | 2 | 3 | |
| 6 | ~~D~~ | I | 1 | 2 | 3 | |
| 8 | ~~D~~ | I | 1 | 2 | 3 | |
| 20 | D | ~~I~~ | 1 | 2 | 3 | |
| | D | I | 1 | 2 | 3 | |
| 71 | D | I | 1 | ~~2~~ | ~~3~~ | |
| 73 | D | I | 1 | ~~2~~ | 3 | |
| | D | I | 1 | 2 | 3 | |
| | D | I | 1 | 2 | 3 | |
| | D | I | 1 | 2 | 3 | |
| | D | I | 1 | 2 | 3 | |
| | D | I | 1 | 2 | 3 | |

D - Decarbonizing
I - Inoperable
B - Base Sand Seal
$F_H$ - Horizontal Flange
R - Riser Lid
G - Gooseneck
$F_V$ - Vertical Flange
V - Valve Body
3 - Observed Leak

PLL = #Leaking Lids / #Lids Observed = 2 / 228 - 3 (In-op) - 9 (INO) = 216 = .94% Lid Leaks

PLO = #Leaking Offtakes / # Offtakes Observed = 0 / 152 - 2 (In-op OFF) - 6 (ONO) = 144 = 0% Leaking Offtakes

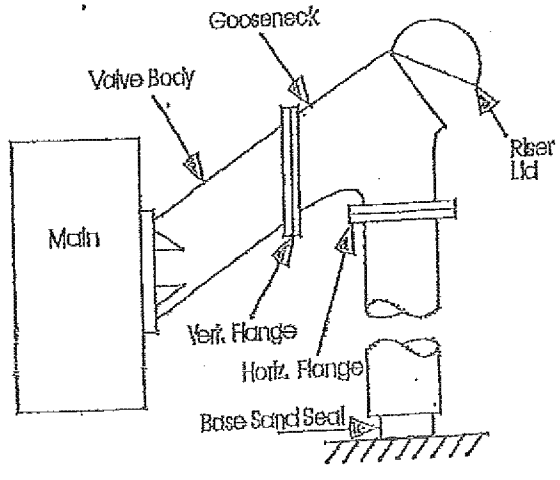


Total Lid Leaks: 2
Total Offtake Leaks: 0

# Door Inspection
## Environmental Quality Management, Inc.
## A.K. Steel, Middletown Works

Battery: Wilputte  Door Not Observed: _____  Co./EPA Personnel: _____

Date: 5/2/18  Inoperable Ovens: _____  Inspector: Charlie

Shift: 7-3  Certification Expiration Date: N/A

Start Time: 2:40 Hr:Min  End Time: 2:43 Hr:Min

Start Time: 2:46 Hr:Min  End Time: 2:50 Hr:Min

**Pusher Side**

Actual T: 3 m 60 s = _____ sec.

Allowable T=(304 sec)+(10 sec* _____ )= _____ sec

| Oven # | Doors | | | Comments |
|---|---|---|---|---|
| | D | C | PU | |
| | D | C | PU | |
| | D | C | PU | |
| | D | C | PU | |
| | D | C | PU | |
| | D | C | PU | |
| | D | C | PU | |
| | D | C | PU | |
| | D | C | PU | |
| | D | C | PU | |
| | D | C | PU | |
| | D | C | PU | |
| | D | C | PU | |
| | D | C | PU | |
| | D | C | PU | |
| | D | C | PU | |
| | D | C | PU | |
| | D | C | PU | |

**Coke Side**

Actual T: 3 m 50 s = _____ sec.

Allowable T=(304 sec)+(10 sec* _____ )= _____ sec

| Oven # | Doors | | Comments |
|---|---|---|---|
| 33 | D | ~~PU~~ | |
| 35 | D | ~~PU~~ | |
| 39 | D | ~~PU~~ | |
| 45 | D | ~~PU~~ | |
| 67 | D | ~~PU~~ | |
| | D | PU | |
| | D | PU | |
| | D | PU | |
| | D | PU | |
| | D | PU | |
| | D | PU | |
| | D | PU | |
| | D | PU | |
| | D | PU | |
| | D | PU | |
| | D | PU | |
| | D | PU | |
| | D | PU | |
| | D | PU | |

D - Door  PU - Point Up  C - Chuck

Total Leaks = 0 (PS) + 5 (CS) = 5

Doh = 152 - 2 (Inoperable Doors) - 0 (DNO) = 150

FLD = Door Leaks / Doh = 5 / 150 = 3.33 % Door Leaks

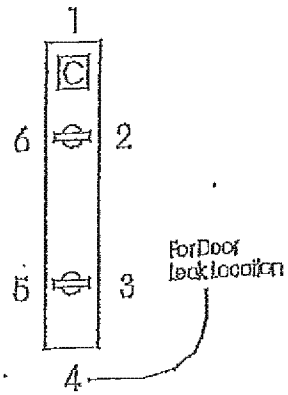

# A.K Steel, Middletown Works

Battery: Wilputte

Co./EPA Personnel: /

Date: 5/2/18

Inspector: [illegible]

Shift: 7-3

Certification Expiration Date: N/A

| Source | Coke Side Leak Location | Push Side Leak Location | Comments |
|---|---|---|---|
| 1. Spoon Hole Covers | O/K | O/K | |
| 2. Valve Body Flange/Damper Flange | O/K | O/K | |
| 3. Crossovers (4)/Flare Stacks (4) | O/K | O/K | |
| 4. Liquor Piping/Intakes & Steam | O/K | O/K | |

Regulator Back Pressure:
E 7 mm/$H_2O$ with avg. swings of 6 Last 8 hrs
W 7 mm/$H_2O$ with avg. swings of 6 Last 8 hrs

Remarks: Push Side | Coke Side

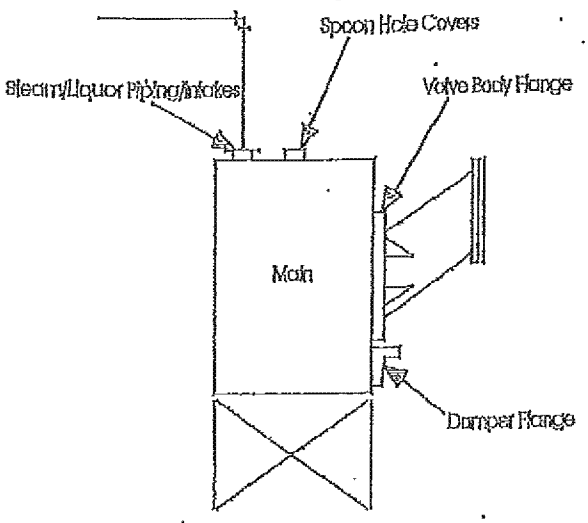


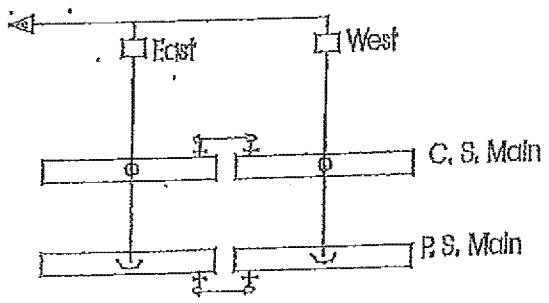

# DAILY REPORT
## ENVIRONMENTAL QUALITY MANAGEMENT, INC.
## A K STEEL, MIDDLETOWN WORKS

Date: 5/3/18

Location: Middletown C.P.

Inspector: Chris Koelle

| | Battery | # Leaking | Total | % Leaking | % Allowable EPA Standards |
|---|---|---|---|---|---|
| Doors | Wilputte | 3 | 150 | 2.00 | 3.3% |
| Lids | Wilputte | 0 | 222 | 0 | 0.4% |
| Standpipes | Wilputte | 0 | 148 | 0 | 2.5% |

Observations (sec.)
Wilputte

5.0
6.5
6.0
5.0
5.5

Total: 28.0

Average: 5.6

12.0

Comments:

# Charging Inspection
## Environmental Quality Management, Inc.
## A K Steel, Middletown Works

Battery: Wilputte

Co./EPA Personnel: /

Date: 5/3/18

Inspector: [signature]

Shift: 7.3

Certification Expiration Date: N/A

Weather/Temp. CLDY 77°

Start Time: 11:36 Hr:Min

End Time: 1:01 Hr:Min

Larry Car #: EAST

| Charge Number | Oven # | Start Time | End Time | Visible Emission Seconds | Visible Emission (a) +1 Second | Ln Ve's (a) +1 Second | Comments |
|---|---|---|---|---|---|---|---|
| 1 | 31 | 11:36 | 11:41 | 5.0 | | | |
| 2 | 33 | 11:55 | 12:00 | 6.5 | | | |
| 3 | 37 | 12:17 | 12:22 | 6.0 | | | # 35 not pushed bypassed |
| 4 | 39 | 12:36 | 12:41 | 5.0 | | | |
| 5 | 41 | 12:56 | 1:01 | 5.5 | | | |
| | | | | | | | |
| | | | | | | | |
| | | | | | | | |
| | | | | | | | |
| | | | | | | | |
| | Total 5 Charges | | | 28.0 | | | ÷5=y= |
| | Average | | | 5.6 | | | $(e^y)-1=(\quad)-1=$ |

a - For use only when computer printout is not included

# Topside Inspection
## Environmental Quality Management, Inc.
## A K Steel, Middletown Works

Battery: Wilputte  Oven Not Observed: _____  Co./EPA Personnel: _____

Date: 5/3/18  Inoperable Ovens: _____  Certification Expiration Date: N/A

Shift: 7.3  Inspector: [signature]

Start Time 11:22 Hr:Min  End Time 11:24 Hr:Min

Start Time 11:25 Hr:Min  End Time 11:27 Hr:Min

Start Time 11:28 Hr:Min  End Time 11:31 Hr:Min

**PS Off Pass**

Actual T 2 m 20 s = ____ sec.

Allowable T=(304 sec)+(10 sec* ____ )= ____ %

| Oven # | Push Side Offtakes | Comments |
|---|---|---|
| 31 | ~~D~~ I | |
| 20 | D ~~I~~ | |
| | D I | |
| | D I | |
| | D I | |
| | D I | |
| | D I | |
| | D I | |
| | D I | |
| | D I | |
| | D I | |
| | D I | |

**CS Off Pass**

Actual T 2 m 18 s = ____ sec

Allowable T=(304 sec)+(10 sec* ____ )= ____ %

| Oven # | Coke Side Offtakes | Comments |
|---|---|---|
| 31 | ~~D~~ I | |
| 20 | D ~~I~~ | |
| | D I | |
| | D I | |
| | D I | |
| | D I | |
| | D I | |
| | D I | |
| | D I | |
| | D I | |
| | D I | |
| | D I | |

**Charge Lid Pass**

Actual T 2 m 20 s = ____ sec

Allowable T=(304 sec)+(10 sec* ____ )= ____ %

| Oven # | Charge Lids | Comments |
|---|---|---|
| 31 | ~~D~~ I 1 2 3 | |
| 20 | D ~~I~~ 1 2 3 | |
| | D I 1 2 3 | |
| | D I 1 2 3 | |
| | D I 1 2 3 | |
| | D I 1 2 3 | |
| | D I 1 2 3 | |
| | D I 1 2 3 | |
| | D I 1 2 3 | |
| | D I 1 2 3 | |
| | D I 1 2 3 | |
| | D I 1 2 3 | |

D - Decarbonizing
I - Inoperable
B - Base Sand Seal
$F_H$ - Horizontal Flange
R - Riser Lid
G - Gooseneck
$F_V$ - Vertical Flange
V - Valve Body
3 - Observed Leak

$$PLL = \frac{\#\text{Leaking Lids}}{\#\text{Lids Observed}} = \frac{0}{228 - \underset{\text{In-op}}{3} - \underset{\text{LNO}}{3}} = \boxed{0\%} \text{ Lid Leaks} = 222$$

$$PLO = \frac{\#\text{Leaking Offtakes}}{\#\text{Offtakes Observed}} = \frac{0}{152 - \underset{\text{In-op OFF}}{2} - \underset{\text{ONO}}{2}} = \boxed{0\%} \text{ Leaking Offtakes} = 148$$

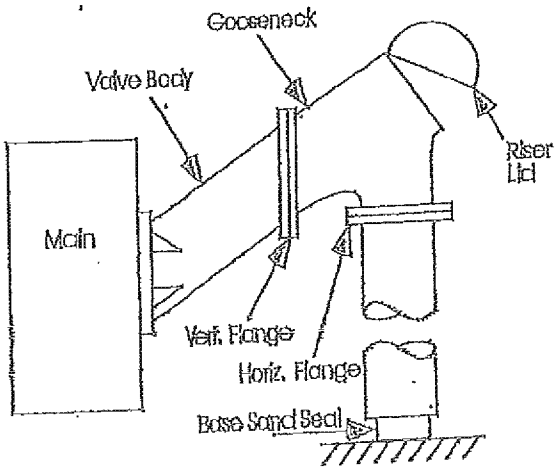


Total Lid Leaks: 0
Total Offtake Leaks: 0

# Door Inspection
## Environmental Quality Management, Inc.
## A.K. Steel, Middletown Works

Battery: Wilputte  Door Not Observed: _____  Co./HPA Personnel: _____

Date: 5/3/18  Inoperable Ovens: _____  Inspector: Charles Fowler

Shift: 7-3  Certification Expiration Date: N/A

Start Time: 11:06 Hr:Min  Start Time: 11:06 Hr:Min
End Time: 11:03 Hr:Min  End Time: 11:10 Hr:Min

**Pusher Side**

Actual T: 3 m 00 s = _____ sec.

Allowable T=(304 sec)+(10 sec* _____ )= _____ sec

| Oven # | Doors | | | Comments |
|---|---|---|---|---|
| | D | C | PU | |
| | D | C | PU | |
| | D | C | PU | |
| | D | C | PU | |
| | D | C | PU | |
| | D | C | PU | |
| | D | C | PU | |
| | D | C | PU | |
| | D | C | PU | |
| | D | C | PU | |
| | D | C | PU | |
| | D | C | PU | |
| | D | C | PU | |
| | D | C | PU | |
| | D | C | PU | |
| | D | C | PU | |
| | D | C | PU | |
| | D | C | PU | |
| | D | C | PU | |

**Coke Side**

Actual T: 3 m 36 s = _____ sec.

Allowable T=(304 sec)+(10 sec* _____ )= _____ sec

| Oven # | Doors | | Comments |
|---|---|---|---|
| 3 | D | ~~PU~~ | |
| 19 | D | ~~PU~~ | |
| 66 | D | ~~PU~~ | |
| | D | PU | |
| | D | PU | |
| | D | PU | |
| | D | PU | |
| | D | PU | |
| | D | PU | |
| | D | PU | |
| | D | PU | |
| | D | PU | |
| | D | PU | |
| | D | PU | |
| | D | PU | |
| | D | PU | |
| | D | PU | |
| | D | PU | |
| | D | PU | |

D - Door  PU - Point Up  C - Chuck

Total Leaks = 0 (PS) + 3 (CS) = 3

Dob = 152 - 2 (Inoperable Doors) - 0 (DNO) = 150

PLD = Door Leaks / Dob = 3 / 150 = 2.00 % Door Leaks

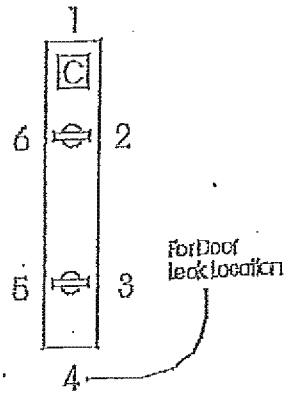

# A.K. Steel, Middletown Works

Battery: Wilputte

Co./EPA Personnel

Date: 6/3/18

Inspector: Charlie Lee

Shift: 7-3

Certification Expiration Date: N/A

| Source | Coke Side Leak Location | Push Side Leak Location | Comments |
|---|---|---|---|
| 1. Spoon Hole Covers | O/K | O/K | |
| 2. Valve Body Flange/Damper Flange | O/K | O/K | |
| 3. Crossovers (4)/Flare Stacks (4) | O/K | O/K | |
| 4. Liquor Piping/Intakes & Steam | O/K | O/K | |

Regulator Back Pressure:
E 6 mm/$H_2O$ with avg. swings of 6 Last 8 hrs
W 6 mm/$H_2O$ with avg. swings of 6 Last 8 hrs

Remarks: Push Side Coke Side

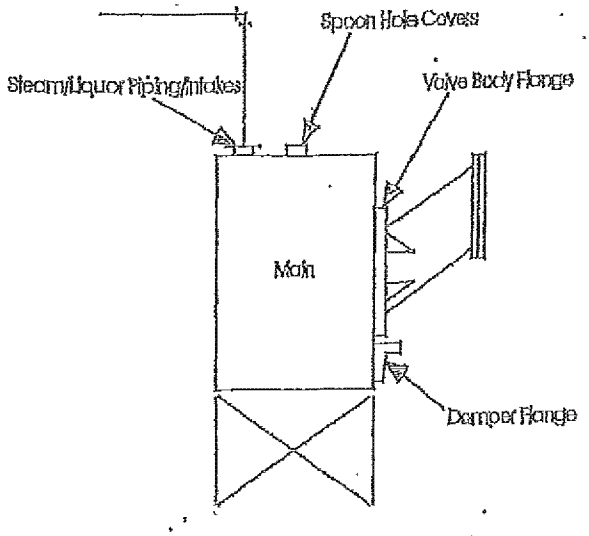


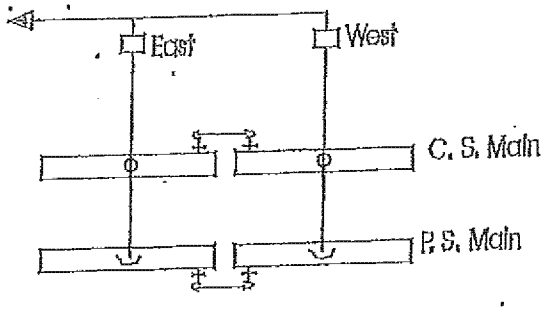

# DAILY REPORT
## ENVIRONMENTAL QUALITY MANAGEMENT, INC.
## A.K. STEEL, MIDDLETOWN WORKS

Date: 5/4/18

Location: Middletown C.P.

Inspector: Charles Koelle

| | Battery | # Leaking | Total | % Leaking | % Allowable EPA Standards |
|---|---|---|---|---|---|
| Doors | Wilputte | 4 | 146 | 2.74 | 3.3% |
| Lids | Wilputte | 0 | 216 | 0 | 0.4% |
| Standpipes | Wilputte | 0 | 144 | 0 | 2.5% |

Observations (sec.)
Wilputte

6.5
5.0
7.5
8.0
5.0

Total: 32.0

Average: 6.4

12.0

Comments:

# Charging Inspection
## Environmental Quality Management, Inc.
## A K Steel, Middletown Works

Battery Wilputte

Co./EPA Personnel

Date: 5/4/18

Inspector: Chuck Kraft

Shift: 7-3

Certification Expiration Date: N/A

Weather/Temp. CLDY 70°

Start Time: 11:31 Hr:Min

End Time: 12:48 Hr:Min

Larry Car # EAST

| Charge Number | Oven # | Start Time | End Time | Visible Emission Seconds | Visible Emission (a) +1 Second | Ln Ve's (a) +1 Second | Comments |
|---|---|---|---|---|---|---|---|
| 1 | 70 | 11:31 | 11:36 | 6.5 | | | |
| 2 | 72 | 11:48 | 11:53 | 5.0 | | | |
| 3 | 74 | 12:09 | 12:14 | 7.5 | | | |
| 4 | 76 | 12:23 | 12:28 | 8.0 | | | |
| 5 | 1 | 12:43 | 12:48 | 5.0 | | | |
| | | | | | | | |
| | | | | | | | |
| | | | | | | | |
| | | | | | | | |
| | | | | | | | |
| | Total 5 Charges | | | 32.0 | | | +5=y= |
| | Average | | | 6.4 | | | $(e^y)-1=(\quad)-1=$ |

[a] - For use only when computer printout is not included

# Topside Inspection
## Environmental Quality Management, Inc.
## A K Steel, Middletown Works

Battery: Wilputte  Oven Not Observed: _____  Co./EPA Personnel: _____

Date: 5/4/18  Inoperable Ovens: _____  Certification Expiration Date: N/A

Shift: 7-3  Inspector: Charles Stell

Start Time 11:19 Hr:Min  End Time 11:21 Hr:Min

Start Time 11:22 Hr:Min  End Time 11:24 Hr:Min

Start Time 11:25 Hr:Min  End Time 11:28 Hr:Min

**PS Off Pass**
Actual T: 2 m 20 s= ____ sec.
Allowable T=(304 sec)+(10 sec* ____ )= ____ %

| Oven # | Push Side Offtakes | | | Comments |
|---|---|---|---|---|
| 70 | ~~D~~ | I | | |
| 8 | D | ~~I~~ | | |
| 20 | D | ~~I~~ | | |
| 44 | D | ~~I~~ | | |
| | D | I | | |
| | D | I | | |
| | D | I | | |
| | D | I | | |
| | D | I | | |
| | D | I | | |
| | D | I | | |
| | D | I | | |

**CS Off Pass**
Actual T: 2 m 15 s= ____ sec
Allowable T=(304 sec)+(10 sec* ____ )= ____ %

| Oven # | Coke Side Offtakes | | | Comments |
|---|---|---|---|---|
| 70 | ~~D~~ | I | | |
| 8 | D | ~~I~~ | | |
| 20 | D | ~~I~~ | | |
| 44 | D | ~~I~~ | | |
| | D | I | | |
| | D | I | | |
| | D | I | | |
| | D | I | | |
| | D | I | | |
| | D | I | | |
| | D | I | | |
| | D | I | | |

**Charge Lid Pass**
Actual T: 2 m 25 s= ____ sec
Allowable T=(304 sec)+(10 sec* ____ )= ____ %

| Oven # | Charge Lids | | | | | Comments |
|---|---|---|---|---|---|---|
| 70 | ~~D~~ | I | 1 | 2 | 3 | |
| 8 | D | ~~I~~ | 1 | 2 | 3 | |
| 20 | D | ~~I~~ | 1 | 2 | 3 | |
| 44 | D | ~~I~~ | 1 | 2 | 3 | |
| | D | I | 1 | 2 | 3 | |
| | D | I | 1 | 2 | 3 | |
| | D | I | 1 | 2 | 3 | |
| | D | I | 1 | 2 | 3 | |
| | D | I | 1 | 2 | 3 | |
| | D | I | 1 | 2 | 3 | |
| | D | I | 1 | 2 | 3 | |
| | D | I | 1 | 2 | 3 | |

D - Decarbonizing
I - Inoperable
B - Base Sand Seal
$F_H$ - Horizontal Flange
R - Riser Lid
G - Gooseneck
$F_V$ - Vertical Flange
V - Valve Body
3 - Observed Leak

$$PLL = \frac{\#\text{Leaking Lids}}{\#\text{Lids Observed}} = \frac{0}{228 - \underset{\text{In-op}}{9} - \underset{\text{LNO}}{3}} = \boxed{0\%} = 216$$ Lid Leaks

$$PLO = \frac{\#\text{Leaking Offtakes}}{\#\text{Offtakes Observed}} = \frac{0}{152 - \underset{\text{In-op OFF}}{6} - \underset{\text{ONO}}{2}} = \boxed{0\%} = 144$$ Leaking Offtakes

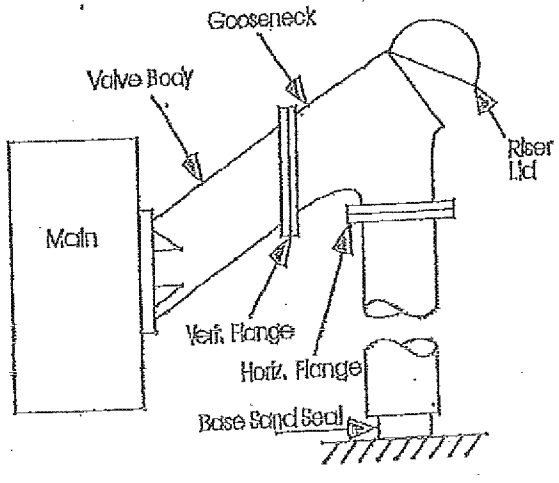


Total Lid Leaks: 0
Total Offtake Leaks: 0

# Door Inspection
## Environmental Quality Management, Inc.
## A K Steel, Middletown Works

Battery: Wilputte  Door Not Observed: _____  Co./BPA Personnel: _____

Date: 5/4/18  Inoperable Ovens: _____  Inspector: Charles Fuller

Shift: 7-3  Certification Expiration Date: N/A

Start Time: 10:57 Hr:Min  Start Time: 11:04 Hr:Min
End Time: 11:00 Hr:Min  End Time: 11:08 Hr:Min

**Pusher Side**

Actual T: 3 m 10 s = _____ sec.

Allowable T=(304 sec)+(10 sec* _____ )= _____ sec

| Oven # | Doors | | | Comments |
|---|---|---|---|---|
| 58 | D | C | ~~PU~~ | |
| | D | C | PU | |
| | D | C | PU | |
| | D | C | PU | |
| | D | C | PU | |
| | D | C | PU | |
| | D | C | PU | |
| | D | C | PU | |
| | D | C | PU | |
| | D | C | PU | |
| | D | C | PU | |
| | D | C | PU | |
| | D | C | PU | |
| | D | C | PU | |
| | D | C | PU | |
| | D | C | PU | |
| | D | C | PU | |
| | D | C | PU | |
| | D | C | PU | |
| | D | C | PU | |
| | D | C | PU | |

**Coke Side**

Actual T _____ m _____ s = _____ sec.

Allowable T=(304 sec)+(10 sec* _____ )= _____ sec

| Oven # | Doors | | Comments |
|---|---|---|---|
| 23 | D | ~~PU~~ | |
| 46 | D | ~~PU~~ | |
| 68 | D | ~~PU~~ | |
| | D | PU | |
| | D | PU | |
| | D | PU | |
| | D | PU | |
| | D | PU | |
| | D | PU | |
| | D | PU | |
| | D | PU | |
| | D | PU | |
| | D | PU | |
| | D | PU | |
| | D | PU | |
| | D | PU | |
| | D | PU | |
| | D | PU | |
| | D | PU | |
| | D | PU | |

D - Door  PU - Point Up  C - Chuck

Total Leaks = 1 (PS) + 3 (CS) = 4

Doh = 152 - 6 (Inoperable Doors) - 0 (DNO) = 146

PLD = Door Leaks / Doh = 4 / 146 = 2.74 % Door Leaks

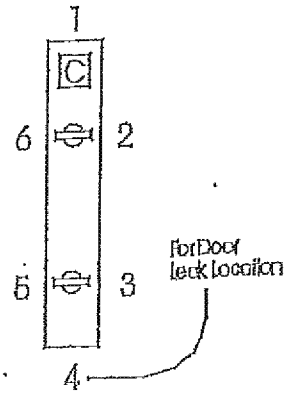

# AK Steel, Middletown Works

Battery: Whipple

Co./EPA Personnel: /

Date: 5/4/18

Inspector: [illegible]

Shift: 7-3

Certification Expiration Date: N/A

| Source | Coke Side Leak Location | Push Side Leak Location | Comments |
|---|---|---|---|
| 1. Spoon Hole Covers | O/K | O/K | |
| 2. Valve Body Flange/Damper Flange | O/K | O/K | |
| 3. Crossovers (4)/Flare Stacks (4) | O/K | O/K | |
| 4. Liquor Piping/Intakes & Steam | O/K | O/K | |

Regulator Back Pressure:
E 7 mm/$H_2O$ with avg. swings of 6 Last 8 hrs
W 7 mm/$H_2O$ with avg. swings of 6 Last 8 hrs

Remarks: Push Side / Coke Side

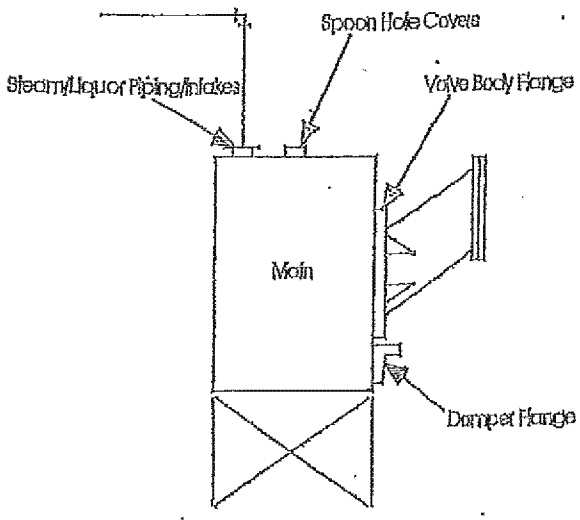


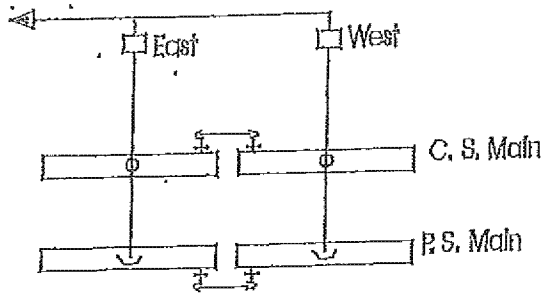

# DAILY REPORT
## ENVIRONMENTAL QUALITY MANAGEMENT, INC.
## A K STEEL, MIDDLETOWN WORKS

Date: 5/5/18

Location: Middletown C.P.

Inspector: Chaile Koelle

| | Battery | #Leaking | Total | % Leaking | % Allowable EPA Standards |
|---|---|---|---|---|---|
| Doors | Wilputte | 3 | 148 | 2.03 | 3.3% |
| Lids | Wilputte | 0 | 219 | 0 | 0.4% |
| Standpipes | Wilputte | 0 | 146 | 0 | 2.5% |

| | Observations (sec.) Wilputte |
|---|---|
| | 4.5 |
| | 7.0 |
| | 6.0 |
| | 8.0 |
| | 5.5 |
| | 31.0 |
| Total: | 6.2 |

Average: 12.0

Comments:

# Charging Inspection
## Environmental Quality Management, Inc.
## A K Steel, Middletown Works

Battery: Wilpulte

Co./EPA Personnel

Inspector: Charl Kale

Date: 5/5/18

Certification Expiration Date: N/A

Shift: 7.3

Weather/Temp. Cwy 64°

Start Time: 11:30 Hr:Min

End Time: 12:44 Hr:Min

Larry Car # 15A5T

| Charge Number | Oven # | Start Time | End Time | Visible Emission Seconds | Visible Emission (a) +1 Second | Ln Ve's (a) +1 Second | Comments |
|---|---|---|---|---|---|---|---|
| 1 | 36 | 11:30 | 11:35 | 4.5 | | | |
| 2 | 38 | 11:46 | 11:51 | 7.0 | | | |
| 3 | 40 | 12:04 | 12:09 | 6.0 | | | |
| 4 | 42 | 12:24 | 12:29 | 8.0 | | | #44 out for Repair |
| 5 | 46 | 12:39 | 12:44 | 5.5 | | | |
| | | | | | | | |
| | | | | | | | |
| | | | | | | | |
| | | | | | | | |
| | | | | | | | |
| | Total 5 Charges | | | 31.0 | | | ÷5=y= |
| | Average | | | 6.2 | | | $(e^y)-1=(\quad)-1=$ |

a - For use only when computer printout is not included

# Topside Inspection
## Environmental Quality Management, Inc.
## A.K Steel, Middletown Works

Battery: Wilputte

Oven Not Observed: _____

Co./EPA Personnel: _____

Certification Expiration Date: N/A

Date: 5/5/18

Inoperable Ovens: _____

Inspector: Clark Kale

Shift: 7-3

Start Time 11:18 Hr:Min
End Time 11:20 Hr:Min

Start Time 11:21 Hr:Min
End Time 11:23 Hr:Min

Start Time 11:24 Hr:Min
End Time 11:27 Hr:Min

PH Off Pass
Actual T 2 m 20 s = ____ sec.
Allowable T=(304 sec)+(10 sec) ____ )= ____ %

CS Off Pass
Actual T 2 m 20 s = ____ Sec
Allowable T=(304 sec)+(10 sec) ____ )= ____ %

Charge Lid Pass
Actual T 2 m 25 s = ____ sec
Allowable T=(304 sec)+(10 sec) ____ )= ____ %

| Oven # | Push Side Offtakes | | Comments |
|---|---|---|---|
| 36 | D | I | |
| 20 | D | X | |
| 44 | D | X | |
| | D | I | |
| | D | I | |
| | D | I | |
| | D | I | |
| | D | I | |
| | D | I | |
| | D | I | |
| | D | I | |
| | D | I | |

| Oven # | Coke Side Offtakes | | Comments |
|---|---|---|---|
| 36 | D | I | |
| 20 | D | X | |
| 44 | D | X | |
| | D | I | |
| | D | I | |
| | D | I | |
| | D | I | |
| | D | I | |
| | D | I | |
| | D | I | |
| | D | I | |
| | D | I | |

| Oven # | Charge Lids | | | | | Comments |
|---|---|---|---|---|---|---|
| 36 | D | I | 1 | 2 | 3 | |
| 20 | D | X | 1 | 2 | 3 | |
| 44 | D | X | 1 | 2 | 3 | |
| | D | I | 1 | 2 | 3 | |
| | D | I | 1 | 2 | 3 | |
| | D | I | 1 | 2 | 3 | |
| | D | I | 1 | 2 | 3 | |
| | D | I | 1 | 2 | 3 | |
| | D | I | 1 | 2 | 3 | |
| | D | I | 1 | 2 | 3 | |
| | D | I | 1 | 2 | 3 | |
| | D | I | 1 | 2 | 3 | |

D - Decarbonizing
I - Inoperable
B - Base Sand Seal
$F_H$ - Horizontal Flange
R - Riser Lid
G - Gooseneck
$F_V$ - Vertical Flange
V - Valve Body
3 - Observed Leak

$$PLL = \frac{\#\text{Leaking Lids}}{\#\text{Lids Observed}} = \frac{0}{228 - \underset{\text{In-op}}{6} - \underset{\text{LNO}}{3}} = \frac{0}{219} = 0\%$$ Lid Leaks

$$PLO = \frac{\#\text{Leaking Offtakes}}{\#\text{Offtakes Observed}} = \frac{0}{152 - \underset{\text{In-op OFF}}{4} - \underset{\text{ONO}}{2}} = \frac{0}{146} = 0\%$$ Leaking Offtakes

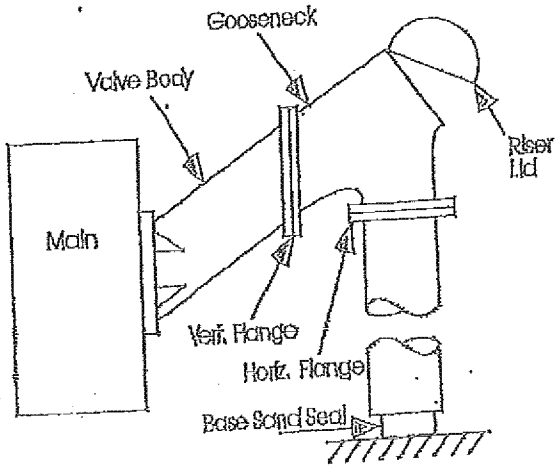


Total Lid Leaks: 0
Total Offtake Leaks: 0

# Door Inspection
## Environmental Quality Management, Inc.
## AK Steel, Middletown Works

Battery: Wilputte  Door Not Observed: _____  Co./EPA Personnel: _____

Date: 5/5/18  Inoperable Ovens: _____  Inspector: [illegible]

Shift: 7-3  Certification Expiration Date: N/A

Start Time: 10:58 Hr:Min  End Time: 10:59 Hr:Min

Start Time: 11:02 Hr:Min  End Time: 11:06 Hr:Min

**Pusher Side**

Actual T: 3 m 18 s = _____ sec.

Allowable T=(304 sec)+(10 sec* _____ )= _____ sec

| Oven # | Doors | | | Comments |
|---|---|---|---|---|
| 30 | D | C | ~~PU~~ | |
| | D | C | PU | |
| | D | C | PU | |
| | D | C | PU | |
| | D | C | PU | |
| | D | C | PU | |
| | D | C | PU | |
| | D | C | PU | |
| | D | C | PU | |
| | D | C | PU | |
| | D | C | PU | |
| | D | C | PU | |
| | D | C | PU | |
| | D | C | PU | |
| | D | C | PU | |
| | D | C | PU | |
| | D | C | PU | |
| | D | C | PU | |
| | D | C | PU | |
| | D | C | PU | |
| | D | C | PU | |
| | D | C | PU | |

**Coke Side**

Actual T: 3 m 20 s = _____ sec.

Allowable T=(304 sec)+(10 sec* _____ )= _____ sec

| Oven # | Doors | | | Comments |
|---|---|---|---|---|
| 32 | D | ~~PU~~ | | |
| 67 | D | ~~PU~~ | | |
| | D | PU | | |
| | D | PU | | |
| | D | PU | | |
| | D | PU | | |
| | D | PU | | |
| | D | PU | | |
| | D | PU | | |
| | D | PU | | |
| | D | PU | | |
| | D | PU | | |
| | D | PU | | |
| | D | PU | | |
| | D | PU | | |
| | D | PU | | |
| | D | PU | | |
| | D | PU | | |
| | D | PU | | |
| | D | PU | | |
| | D | PU | | |

D - Door  PU - Point Up  C - Chuck

Total Leaks = 1 (PS) + 2 (CS) = 3

Dob = 152 - 4 (Inoperable Doors) - 0 (DNO) = 148

PLD = Door Leaks / Dob = 3 / 148 = 2.03 % Door Leaks

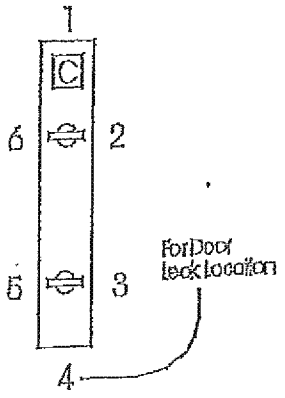

# A.K. Steel, Middletown Works

Battery: Wilputte

Co./EPA Personnel: /

Date: 5/8/18

Inspector: [illegible]

Shift: 7-3

Certification Expiration Date: N/A

| Source | Coke Side Leak Location | Push Side Leak Location | Comments |
|---|---|---|---|
| 1. Spoon Hole Covers | OK | OK | |
| 2. Valve Body Flange/Damper Flange | OK | OK | |
| 3. Crossovers (4)/Flare Stacks (4) | OK | OK | |
| 4. Liquor Piping/Intakes & Steam | OK | OK | |

Regulator Back Pressure:
E 6 mm/$H_2O$ with avg. swings of 6 Last 8 hrs
W 6 mm/$H_2O$ with avg. swings of 6 Last 8 hrs

Remarks:

Push Side

Coke Side

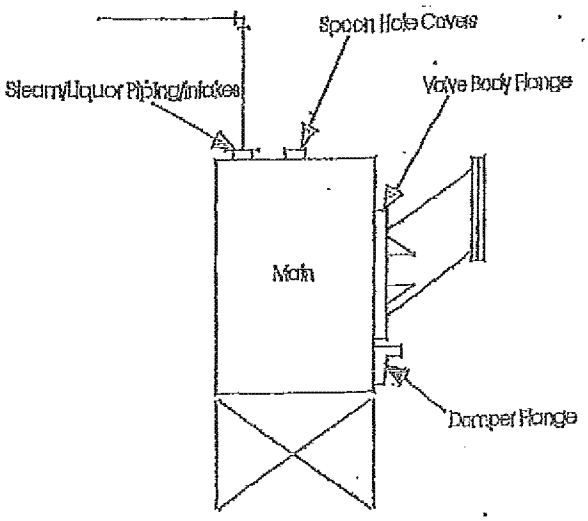


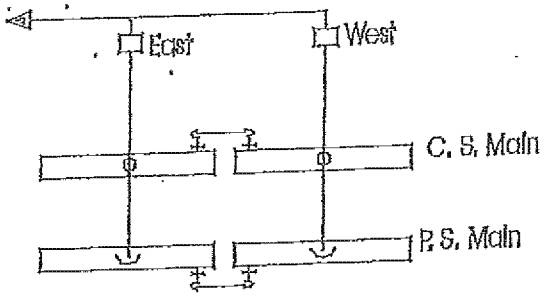

# DAILY REPORT
## ENVIRONMENTAL QUALITY MANAGEMENT, INC.
## A K STEEL, MIDDLETOWN WORKS

Date: 5/6/18

Location: Middletown C.P.

Inspector: Charles Koeller

| | Battery | # Leaking | Total | % Leaking | % Allowable EPA Standards |
|---|---|---|---|---|---|
| Doors | Wilputte | 4 | 148 | 2.70 | 3.3% |
| Lids | Wilputte | 0 | 219 | 0 | 0.4% |
| Standpipes | Wilputte | 1 | 146 | .70 | 2.5% |

| Observations (sec.) Wilputte | |
|---|---|
| 8.0 | |
| 9.5 | |
| 7.5 | |
| 12.0 | |
| 14.5 | |
| 51.5 | |
| Total: 10.3 | 12.0 |

Average:

Comments:

# Charging Inspection
## Environmental Quality Management, Inc.
## A K Steel, Middletown Works

Battery Wilputte

Co./EPA Personnel

Date: 5/6/18

Inspector: Charles Kaelin

Shift: 7.3

Certification Expiration Date: N/A

Weather/Temp. Clear 74°

Start Time: 11:30 Hr:Min
End Time: 12:47 Hr:Min
Larry Car # EAST

| Charge Number | Oven # | Start Time | End Time | Visible Emission Seconds | Visible Emission (a) +1 Second | Ln Ve's (a) +1 Second | Comments |
|---|---|---|---|---|---|---|---|
| 1 | 75 | 11:30 | 11:35 | 8.0 | | | |
| 2 | 2 | 11:51 | 11:56 | 9.5 | | | |
| 3 | 4 | 12:06 | 12:11 | 7.5 | | | |
| 4 | 6 | 12:23 | 12:28 | 12.0 | | | |
| 5 | 8 | 12:42 | 12:47 | 14.5 | | | |
| | | | | | | | |
| | | | | | | | |
| | | | | | | | |
| | | | | | | | |
| | | | | | | | |
| | Total 5 Charges | | | 51.5 | | | ÷5=y= |
| | Average | | | 10.3 | | | $(e^y)-1=(\quad)-1=$ |

[a] - For use only when computer printout is not included

# Topside Inspection
## Environmental Quality Management, Inc.
## A K Steel, Middletown Works

Battery: Wilputte  Oven Not Observed: _____  Co./EPA Personnel: _____

Date: 5/6/18  Inoperable Ovens: _____  Certification Expiration Date: N/A

Shift: 7.3  Inspector: Charle Kall

Start Time 11:19 Hr:Min  End Time 11:20 Hr:Min

Start Time 11:21 Hr:Min  End Time 11:23 Hr:Min

Start Time 11:24 Hr:Min  End Time 11:27 Hr:Min

**PS Off Pass**
Actual T 2 m 20 s = ____ sec.
Allowable T=(304 sec)+(10 sec* ____ )= ____ %

| Oven # | Push Side Offtakes | | | Comments |
|---|---|---|---|---|
| 75 | D | I | | |
| 20 | D | I | | |
| 44 | D | I | | |
| | D | I | | |
| 71 | D | I | | R |
| | D | I | | |
| | D | I | | |
| | D | I | | |
| | D | I | | |
| | D | I | | |
| | D | I | | |
| | D | I | | |

**CS Off Pass**
Actual T 2 m 15 s = ____ sec
Allowable T=(304 sec)+(10 sec* ____ )= ____ %

| Oven # | Coke Side Offtakes | | | Comments |
|---|---|---|---|---|
| 75 | D | I | | |
| 20 | D | I | | |
| 44 | D | I | | |
| | D | I | | |
| | D | I | | |
| | D | I | | |
| | D | I | | |
| | D | I | | |
| | D | I | | |
| | D | I | | |
| | D | I | | |
| | D | I | | |

**Charge Lid Pass**
Actual T 2 m 15 s = ____ sec
Allowable T=(304 sec)+(10 sec* ____ )= ____ %

| Oven # | Charge Lids | | | | | Comments |
|---|---|---|---|---|---|---|
| 75 | D | I | 1 | 2 | 3 | |
| 20 | D | I | 1 | 2 | 3 | |
| 44 | D | I | 1 | 2 | 3 | |
| | D | I | 1 | 2 | 3 | |
| | D | I | 1 | 2 | 3 | |
| | D | I | 1 | 2 | 3 | |
| | D | I | 1 | 2 | 3 | |
| | D | I | 1 | 2 | 3 | |
| | D | I | 1 | 2 | 3 | |
| | D | I | 1 | 2 | 3 | |
| | D | I | 1 | 2 | 3 | |
| | D | I | 1 | 2 | 3 | |

D - Decarbonizing
I - Inoperable
B - Base Sand Seal
$F_H$ - Horizontal Flange
R - Riser Lid
G - Gooseneck
$F_V$ - Vertical Flange
V - Valve Body
3 - Observed Leak

PLL = # Leaking Lids / # Lids Observed = 0 / (228 - 6 In-op - 3 LNO) = 0 % Lid Leaks = 219

PLO = # Leaking Offtakes / # Offtakes Observed = 1 / (152 - 4 In-op OFF - 2 ONO) = 146 % Leaking Offtakes

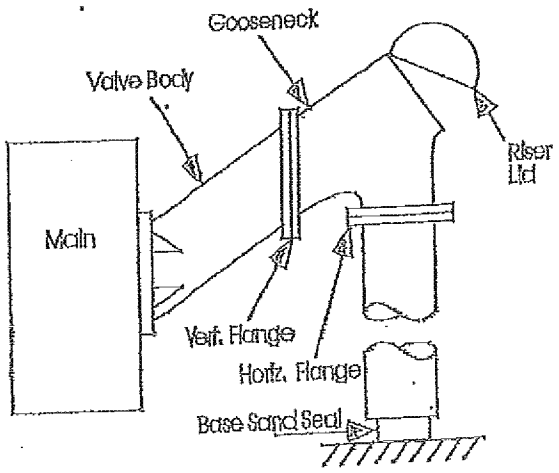


Total Lid Leaks: 0
Total Offtake Leaks: 1

# Door Inspection
## Environmental Quality Management, Inc.
## A.K. Steel, Middletown Works

Battery: Wilputte  Door Not Observed: _____  Co./IEPA Personnel: _____

Date: 5/6/18  Inoperable Ovens: _____  Inspector: Charles Keller

Shift: 7-3  Certification Expiration Date: N/A

Start Time: 10:55 Hr:Min  Start Time: 11:02 Hr:Min
End Time: 10:58 Hr:Min  End Time: 11:06 Hr:Min

**Pusher Side**
Actual T: 3 m 06 s = ____ sec.
Allowable T=(304 sec)+(10 sec* ____ )= ____ sec

**Coke Side**
Actual T: 3 m 40 s = ____ sec.
Allowable T=(304 sec)+(10 sec* ____ )= ____ sec

| Oven # | Doors | | | Comments |
|---|---|---|---|---|
| | D | C | PU | |
| | D | C | PU | |
| | D | C | PU | |
| | D | C | PU | |
| | D | C | PU | |
| | D | C | PU | |
| | D | C | PU | |
| | D | C | PU | |
| | D | C | PU | |
| | D | C | PU | |
| | D | C | PU | |
| | D | C | PU | |
| | D | C | PU | |
| | D | C | PU | |
| | D | C | PU | |
| | D | C | PU | |
| | D | C | PU | |
| | D | C | PU | |

| Oven # | Doors | | Comments |
|---|---|---|---|
| 15 | D | ~~PU~~ | |
| 31 | D | ~~PU~~ | |
| 47 | D | ~~PU~~ | |
| 67 | D | ~~PU~~ | |
| | D | PU | |
| | D | PU | |
| | D | PU | |
| | D | PU | |
| | D | PU | |
| | D | PU | |
| | D | PU | |
| | D | PU | |
| | D | PU | |
| | D | PU | |
| | D | PU | |
| | D | PU | |
| | D | PU | |
| | D | PU | |

D - Door  PU - Point Up  C - Chuck

Total Leaks = 0 (PS) + 4 (CS) = 4

Doh = 152 - 4 (Inoperable Doors) - 0 (DNO) = 148

PLD = Door Leaks / Doh = 4 / 148 = 2.70 % Door Leaks

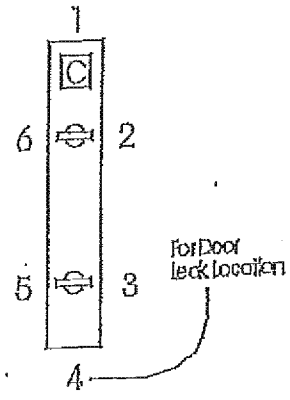

# A.K. Steel, Middletown Works

Battery: Wilpulte

Co./BPA Personnel

Date: 5/6/18

Inspector: [illegible]

Shift: 7-3

Certification Expiration Date: N/A

| Source | Coke Side Leak Location | Push Side Leak Location | Comments |
|---|---|---|---|
| 1. Spoon Hole Covers | O/I | O/I | |
| 2. Valve Body Flange/Damper Flange | O/I | O/I | |
| 3. Crossovers (4)/Flare Stacks (4) | O/I | O/I | |
| 4. Liquor Piping/Intakes & Steam | O/I | O/I | |

Regulator Back Pressure:

E 6 mm/$H_2O$ with avg. swings of 6 Last 8 hrs

W 7 mm/$H_2O$ with avg. swings of 6 Last 8 hrs

Remarks:

Push Side

Coke Side

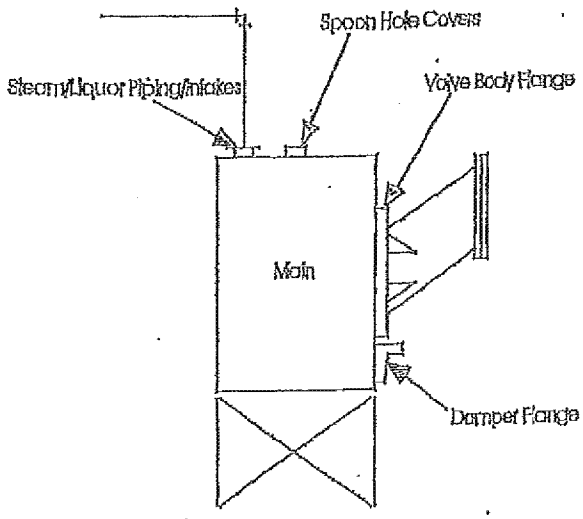


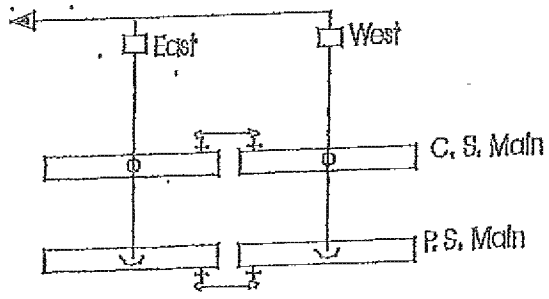

# DAILY REPORT
## ENVIRONMENTAL QUALITY MANAGEMENT, INC.
## A.K. STEEL, MIDDLETOWN WORKS

Date: 5/7/18

Location: Middletown C.P.

Inspector: Charles Kaile

| | Battery | # Leaking | Total | % Leaking | % Allowable BPA Standards |
|---|---|---|---|---|---|
| Doors | Wilputte | 5 | 146 | 3.42 | 3.3% |
| Lids | Wilputte | 0 | 216 | 0 | 0.4% |
| Standpipes | Wilputte | 0 | 144 | 0 | 2.5% |

| Observations (sec.) Wilputte |
|---|
| 7.0 |
| 4.0 |
| 8.0 |
| 5.0 |
| 6.1 |
| 29.5 |

Total: 5.9

Average: 12.0

Comments:

# Charging Inspection
## Environmental Quality Management, Inc.
## A.K Steel, Middletown Works

Battery: Wilputte

Co./EPA Personnel

Inspector: [illegible]

Date: 5/7/18

Certification Expiration Date: N/A

Shift: 7-3

Weather/Temp.

Start Time: 11:27 Hr:Min

End Time: 12:41 Hr:Min

Larry Car #: [illegible]

| Charge Number | Oven # | Start Time | End Time | Visible Emission Seconds | Visible Emission (a) +1 Second | Ln Vo's (a) +1 Second | Comments |
|---|---|---|---|---|---|---|---|
| 1 | 45 | 11:27 | 11:32 | 7.0 | | | |
| 2 | 47 | 11:49 | 11:55 | 4.0 | | | |
| 3 | 49 | 12:05 | 12:11 | 8.0 | | | |
| 4 | 51 | 12:20 | 12:27 | 5.0 | | | |
| 5 | 53 | 12:35 | 12:41 | 6.0 | | | |
| | | | | | | | |
| | | | | | | | |
| | | | | | | | |
| | | | | | | | |
| | | | | | | | |
| | Total 5 Charges | | | 29.5 | | | +5=γ= |
| | Average | | | 5.9 | | | (eγ)-1=( )-1= |

a - For use only when computer printout is not included

# Topside Inspection
## Environmental Quality Management, Inc.
## A K Steel, Middletown Works

Battery: Wilputte  Oven Not Observed: _____  Co./EPA Personnel: _____

Date: 5/7/18  Inoperable Ovens: _____  Certification Expiration Date: N/A

Shift: 7.3  Inspector: Chuck Kull

Start Time 11:16 Hr:Min  Start Time 11:19 Hr:Min  Start Time 11:22 Hr:Min
End Time 11:18 Hr:Min  End Time 11:21 Hr:Min  End Time 11:28 Hr:Min

**PS Off Pass**
Actual T 2 m 20 s= ____ sec.
Allowable T=(304 sec)+(10 sec* ____ )= ____ %

| Oven # | Push Side Offtakes | Comments |
|---|---|---|
| 45 | D ~~I~~ | |
| 20 | D ~~I~~ | |
| 21 | D ~~I~~ | |
| 44 | D ~~I~~ | |
| | D I | |
| | D I | |
| | D I | |
| | D I | |
| | D I | |
| | D I | |
| | D I | |
| | D I | |

**CS Off Pass**
Actual T 2 m 15 s= ____ Sec
Allowable T=(304 sec)+(10 sec* ____ )= ____ %

| Oven # | Coke Side Offtakes | Comments |
|---|---|---|
| 45 | D ~~I~~ | |
| 20 | D ~~I~~ | |
| 21 | D ~~I~~ | |
| 44 | D ~~I~~ | |
| | D I | |
| | D I | |
| | D I | |
| | D I | |
| | D I | |
| | D I | |
| | D I | |
| | D I | |

**Charge Lid Pass**
Actual T 2 m 15 s= ____ sec
Allowable T=(304 sec)+(10 sec* ____ )= ____ %

| Oven # | Charge Lids | Comments |
|---|---|---|
| 45 | D ~~I~~ 1 2 3 | |
| 20 | D ~~I~~ 1 2 3 | |
| 21 | D ~~I~~ 1 2 3 | |
| 44 | D ~~I~~ 1 2 3 | |
| | D I 1 2 3 | |
| | D I 1 2 3 | |
| | D I 1 2 3 | |
| | D I 1 2 3 | |
| | D I 1 2 3 | |
| | D I 1 2 3 | |
| | D I 1 2 3 | |
| | D I 1 2 3 | |

D - Decarbonizing
I - Inoperable
B - Base Sand Seal
$F_H$ - Horizontal Flange
R - Riser Lid
G - Gooseneck
$F_V$ - Vertical Flange
V - Valve Body
3 - Observed Leak

$$PLL = \frac{\#\text{Leaking Lids}}{\#\text{Lids Observed}} = \frac{0}{228 - \underset{\text{In-op}}{9} - \underset{\text{LNO}}{3}} = \boxed{0\%} = 216$$ Lid Leaks

$$PLO = \frac{\#\text{Leaking Offtakes}}{\#\text{Offtakes Observed}} = \frac{0}{152 - \underset{\text{In-op OFF}}{6} - \underset{\text{ONO}}{2}} = \boxed{0\%} = 144$$ Leaking Offtakes

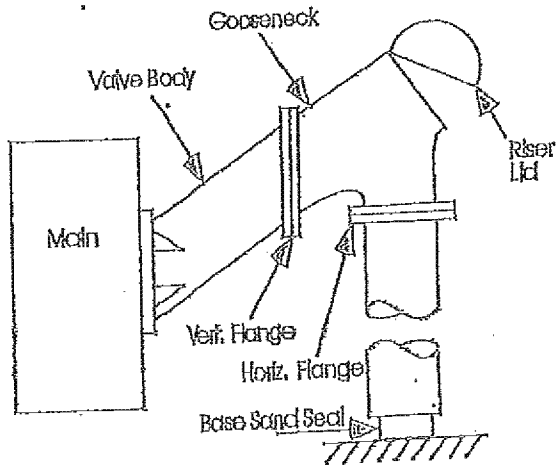


Total Lid Leaks: 0
Total Offtake Leaks: 0

# Door Inspection
## Environmental Quality Management, Inc.
## A.K. Steel, Middletown Works

Battery: Wilputte  Door Not Observed: _____  Co./EPA Personnel: _____

Date: 5/7/18  Inoperable Ovens: _____  Inspector: Charlie Steele

Shift: 7-3  Certification Expiration Date: N/A

Start Time: 10:53 Hr:Min  Start Time: 11:00 Hr:Min
End Time: 10:56 Hr:Min  End Time: 11:04 Hr:Min

**Pusher Side**
Actual T: 3 m 10 s = ____ sec.
Allowable T=(304 sec)+(10 sec* ____ )= ____ sec

**Coke Side**
Actual T: 3 m 40 s = ____ sec.
Allowable T=(304 sec)+(10 sec* ____ )= ____ sec

| Oven # | Doors | | | Comments |
|---|---|---|---|---|
| 43 | D | C | PU | |
| | D | C | PU | |
| | D | C | PU | |
| | D | C | PU | |
| | D | C | PU | |
| | D | C | PU | |
| | D | C | PU | |
| | D | C | PU | |
| | D | C | PU | |
| | D | C | PU | |
| | D | C | PU | |
| | D | C | PU | |
| | D | C | PU | |
| | D | C | PU | |
| | D | C | PU | |
| | D | C | PU | |
| | D | C | PU | |
| | D | C | PU | |
| | D | C | PU | |

| Oven # | Doors | | Comments |
|---|---|---|---|
| 31 | D | PU | |
| 33 | D | PU | |
| 66 | D | PU | |
| 70 | D | PU | |
| | D | PU | |
| | D | PU | |
| | D | PU | |
| | D | PU | |
| | D | PU | |
| | D | PU | |
| | D | PU | |
| | D | PU | |
| | D | PU | |
| | D | PU | |
| | D | PU | |
| | D | PU | |
| | D | PU | |
| | D | PU | |
| | D | PU | |

D - Door  PU - Point Up  C - Chuck

Total Leaks = 1 (PS) + 4 (CS) = 5

Doh = 152 - 6 (Inoperable Doors) - 0 (DNO) = 146

PLD = Door Leaks / Doh = 5 / 146 = 3.42 % Door Leaks

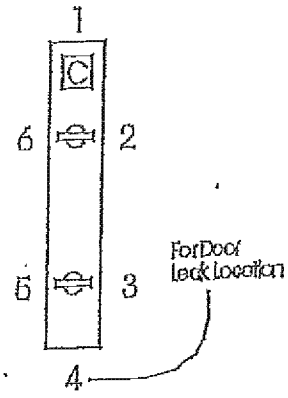

# AK Steel, Middletown Works

Battery: Wilputte

Co./EPA Personnel

Date: 5/7/18

Inspector: [illegible]

Shift: 7-3

Certification Expiration Date: N/A

| Source | Coke Side Leak Location | Push Side Leak Location | Comments |
|---|---|---|---|
| 1. Spoon Hole Covers | OK | OK | |
| 2. Valve Body Flange/Damper Flange | OK | OK | |
| 3. Crossovers (4)/Flare Stacks (4) | OK | OK | |
| 4. Liquor Piping/Intakes & Steam | OK | OK | |

Regulator Back Pressure:

B 7 mm/$H_2O$ with avg. swings of 6 Last 8 hrs

W 7 mm/$H_2O$ with avg. swings of 6 Last 8 hrs

Remarks:

Push Side

Coke Side

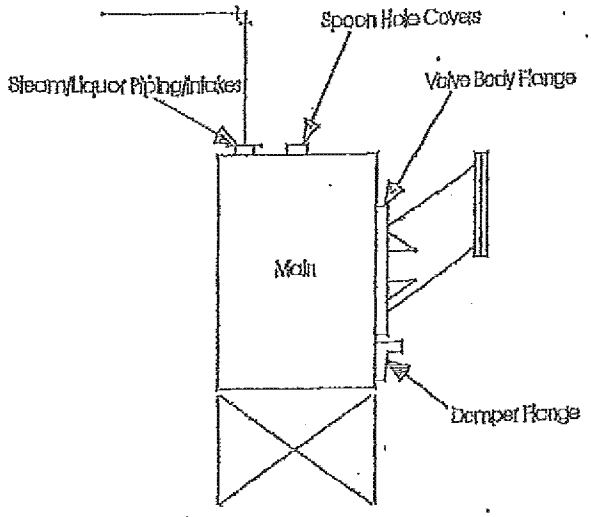


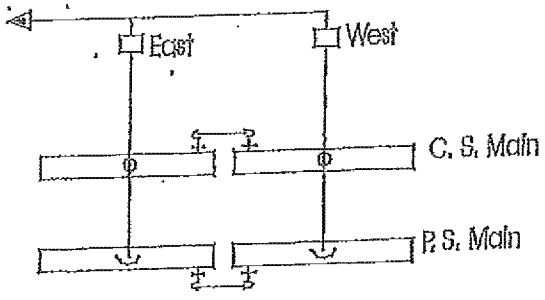

# DAILY REPORT
## ENVIRONMENTAL QUALITY MANAGEMENT, INC.
## A.K. STEEL, MIDDLETOWN WORKS

Date: 5/8/18

Location: Middletown C.P.

Inspector: Chaile Koelle

| | Battery | # Leaking | Total | % Leaking | % Allowable EPA Standards |
|---|---|---|---|---|---|
| Doors | Wilputte | 5 | 146 | 3.42 | 3.3% |
| Lids | Wilputte | 0 | 210 | 0 | 0.4% |
| Standpipes | Wilputte | 1 | 140 | .75 | 2.5% |

| Observations (sec.) Wilputte |
|---|
| 7.5 |
| 5.5 |
| 6.0 |
| 5.0 |
| 6.0 |

30.0

Total: 6.0 12.0

Average:

Comments:

# Charging Inspection
## Environmental Quality Management, Inc.
## A.K. Steel, Middletown Works

Battery: Wilputte

Co./EPA Personnel

Date: 5/8/18

Inspector: [illegible]

Shift: 7-3

Certification Expiration Date: N/A

Weather/Temp. Clear 80°

Start Time: 2:29 Hr:Min

End Time: 3:25 Hr:Min

Larry Car # EAST

| Charge Number | Oven # | Start Time | End Time | Visible Emission Seconds | Visible Emission (a) +1 Second | Ln Ve's (a) +1 Second | Comments |
|---|---|---|---|---|---|---|---|
| 1 | 31 | 2:29 | 2:34 | 7.5 | | | |
| 2 | 33 | 2:41 | 2:46 | 5.5 | | | |
| 3 | 35 | 2:57 | 3:02 | 6.0 | | | |
| 4 | 37 | 3:08 | 3:13 | 5.0 | | | |
| 5 | 39 | 3:20 | 3:25 | 6.0 | | | |
| | | | | | | | |
| | | | | | | | |
| | | | | | | | |
| | | | | | | | |
| | | | | | | | |
| | Total 5 Charges | | | 30.0 | | | +5=y= |
| | Average | | | 6.0 | | | (e^y)-1=( )-1= |

a - For use only when computer printout is not included

# Topside Inspection
## Environmental Quality Management, Inc.
## A K Steel, Middletown Works

Battery: Wilputte  Oven Not Observed: _____  Co./EPA Personnel: _____

Date: 5/8/18  Inoperable Ovens: _____  Certification Expiration Date: N/A

Shift: 7-3  Inspector: [signature]

Start Time 2:17 Hr:Min  End Time 2:19 Hr:Min

Start Time 2:20 Hr:Min  End Time 2:22 Hr:Min

Start Time 2:23 Hr:Min  End Time 2:26 Hr:Min

**PS Off Pass**
Actual T 2 m 21 s = ____ sec.
Allowable T=(304 sec)+(10 sec* ____ )= ____ %

| Oven # | Push Side Offtakes | | | Comments |
|---|---|---|---|---|
| 31 | D | I | | |
| 33 | D | I | | |
| 35 | D | I | | |
| 16 | D | I | | |
| 20 | D | I | | |
| 44 | D | I | | |
| | D | I | | |
| 23 | D | I | | R |
| | D | I | | |
| | D | I | | |
| | D | I | | |
| | D | I | | |

**CS Off Pass**
Actual T 2 m 15 s = ____ sec
Allowable T=(304 sec)+(10 sec* ____ )= ____ %

| Oven # | Coke Side Offtakes | | | Comments |
|---|---|---|---|---|
| 31 | D | I | | |
| 33 | D | I | | |
| 35 | D | I | | |
| 10 | D | I | | |
| 20 | D | I | | |
| 44 | D | I | | |
| | D | I | | |
| | D | I | | |
| | D | I | | |
| | D | I | | |
| | D | I | | |
| | D | I | | |

**Charge Lid Pass**
Actual T 2 m 15 s = ____ sec
Allowable T=(304 sec)+(10 sec* ____ )= ____ %

| Oven # | Charge Lids | | | | | Comments |
|---|---|---|---|---|---|---|
| 31 | D | I | 1 | 2 | 3 | |
| 33 | D | I | 1 | 2 | 3 | |
| 35 | D | I | 1 | 2 | 3 | |
| 10 | D | I | 1 | 2 | 3 | |
| 20 | D | I | 1 | 2 | 3 | |
| 44 | D | I | 1 | 2 | 3 | |
| | D | I | 1 | 2 | 3 | |
| | D | I | 1 | 2 | 3 | |
| | D | I | 1 | 2 | 3 | |
| | D | I | 1 | 2 | 3 | |
| | D | I | 1 | 2 | 3 | |
| | D | I | 1 | 2 | 3 | |

D - Decarbonizing
I - Inoperable
B - Base Sand Seal
$F_H$ - Horizontal Flange
R - Riser Lid
G - Gooseneck
$F_V$ - Vertical Flange
V - Valve Body
3 - Observed Leak

$$PLL = \frac{\#\text{Leaking Lids}}{\#\text{Lids Observed}} = \frac{0}{228 - \underset{\text{In-op}}{9} - \underset{\text{DNO}}{9}} = \boxed{0\%} \text{ Lid Leaks} = 210$$

$$PLO = \frac{\#\text{Leaking Offtakes}}{\#\text{Offtakes Observed}} = \frac{1}{152 - \underset{\text{In-op OFF}}{6} - \underset{\text{ONO}}{6}} = \boxed{.75\%} \text{ Leaking Offtakes} = 140$$

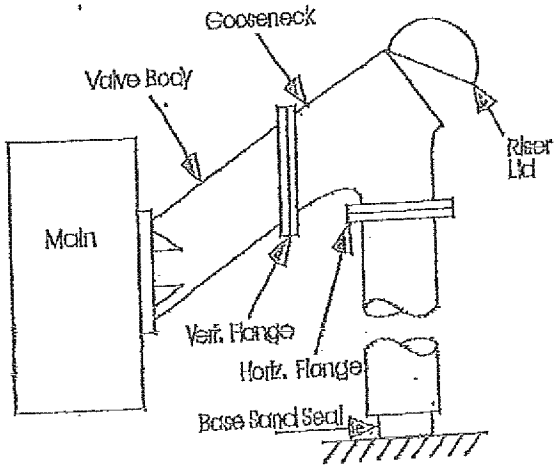


Total Lid Leaks: 0
Total Offtake Leaks: 1

# Door Inspection
## Environmental Quality Management, Inc.
## A K Steel, Middletown Works

Battery Wilpulte  Door Not Observed _____  _____ Co./EPA Personnel

Date: 5/8/18  Inoperable Ovens _____  Inspector: Charles Kuhn

Shift: 7-3  Certification Expiration Date N/A

Start Time 1:57 Hr:Min  Start Time 2:02 Hr:Min
End Time 1:58 Hr:Min  End Time 2:06 Hr:Min

**Pusher Side**
Actual T 3 m 06 s= ____ sec.
Allowable T=(304 sec)+(10 sec* ____ )= ____ sec

**Coke Side**
Actual T 3 m 50 s= ____ sec.
Allowable T=(304 sec)+(10 sec* ____ )= ____ sec

| Oven # | Doors | | | Comments |
|---|---|---|---|---|
| | D | C | PU | |
| | D | C | PU | |
| | D | C | PU | |
| | D | C | PU | |
| | D | C | PU | |
| | D | C | PU | |
| | D | C | PU | |
| | D | C | PU | |
| | D | C | PU | |
| | D | C | PU | |
| | D | C | PU | |
| | D | C | PU | |
| | D | C | PU | |
| | D | C | PU | |
| | D | C | PU | |
| | D | C | PU | |
| | D | C | PU | |

| Oven # | Doors | | Comments |
|---|---|---|---|
| 15 | D | ~~PU~~ | |
| 19 | D | ~~PU~~ | |
| 21 | D | ~~PU~~ | |
| 67 | D | ~~PU~~ | |
| 76 | D | ~~PU~~ | |
| | D | PU | |
| | D | PU | |
| | D | PU | |
| | D | PU | |
| | D | PU | |
| | D | PU | |
| | D | PU | |
| | D | PU | |
| | D | PU | |
| | D | PU | |
| | D | PU | |
| | D | PU | |
| | D | PU | |

D - Door  PU - Point Up  C - Chuck

Total Leaks = 0 (PS) + 5 (CS) = 5

Dob = 152 - 6 (Inoperable Doors) - 0 (DNO) = 146

PLD = Door Leaks / Dob = 5 / 146 = 3.42 % Door Leaks

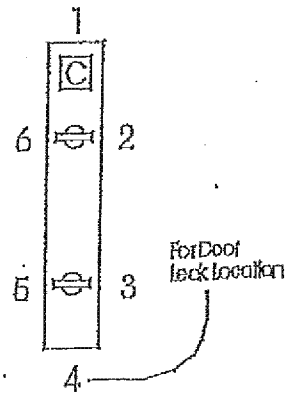

# A.K Steel, Middletown Works

Battery: Wilputte

Co./HPA Personnel: /

Date: 5/8/18

Inspector: Charles Kelly

Shift: 7-3

Certification Expiration Date: N/A

| Source | Coke Side Leak Location | Push Side Leak Location | Comments |
|---|---|---|---|
| 1. Spoon Hole Covers | O/K | O/K | |
| 2. Valve Body Flange/Damper Flange | O/K | O/K | |
| 3. Crossovers (4)/Flare Stacks (4) | O/K | O/K | |
| 4. Liquor Piping/Intakes & Steam | O/K | O/K | |

Regulator:
Back Pressure: E 7 mm/$H_2O$ with avg. swings of 6 Last 8 hrs
W 7 mm/$H_2O$ with avg. swings of 6 Last 8 hrs

Remarks: Push Side | Coke Side

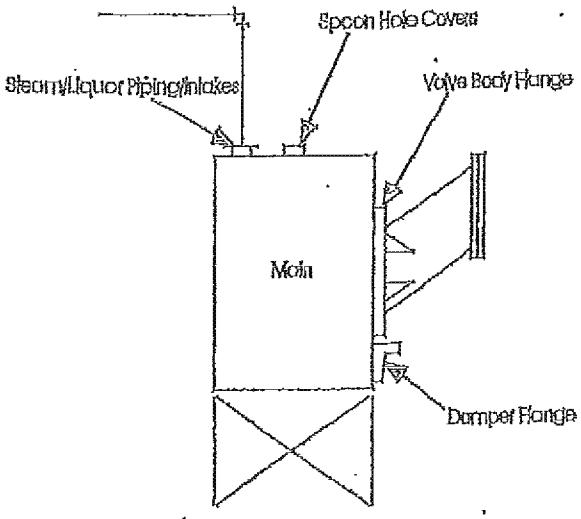


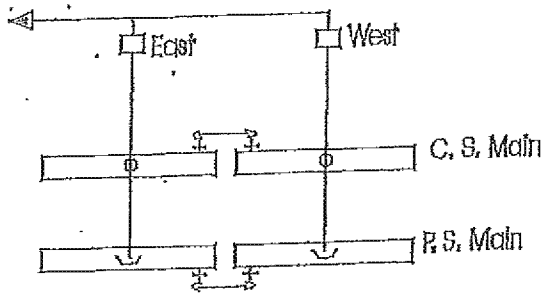

# DAILY REPORT
## ENVIRONMENTAL QUALITY MANAGEMENT, INC.
## A.K. STEEL, MIDDLETOWN WORKS

Date: 5-9-18

Location: Middletown C.P.

Inspector: Guy Woodall

| | Battery | # Leaking | Total | % Leaking | % Allowable BPA Standards |
|---|---|---|---|---|---|
| | | | | | 3.3% |
| Doors | Wilputte | 5 | 148 | | 0.4% |
| Lids | Wilputte | 0 | 219 | 0 | 2.5% |
| Standpipes | Wilputte | 0 | 146 | 0 | |

Observations (sec.)
Wilputte

6.5
10.0
8.0
8.5
9.0

Total: 42.5

Average: 8.5 — 12.0

Comments:

# Charging Inspection
## Environmental Quality Management, Inc.
## A.K Steel, Middletown Works

Battery: Wilputte

Co./BPA Personnel: /

Date: 5-9-18

Inspector: [illegible]

Shift: 7-3

Certification Expiration Date: N/A

Weather/Temp. clear 74°

Start Time: 11:30 Hr:Min

End Time: 12:43 Hr:Min

Larry Car #: 1525

| Charge Number | Oven # | Start Time | End Time | Visible Emission Seconds | Visible Emission (a) +1 Second | Int Vd's (a) +1 Second | Comments |
|---|---|---|---|---|---|---|---|
| 1 | 68 | 11:30 | 11:35 | 6.5 | | | |
| 2 | 72 | 11:50 | 11:55 | 10.0 | | | #70 not pushed |
| 3 | 74 | 12:04 | 12:05 | 8.0 | | | |
| 4 | 76 | 12:20 | 12:25 | 8.5 | | | |
| 5 | 1 | 12:35 | 12:49 | 9.5 | | | |
| | | | | | | | |
| | | | | | | | |
| | | | | | | | |
| | | | | | | | |
| | | | | | | | |
| | | | | | | | ÷5=y= |
| | Total 5 Charges | | | 42.5 | | | |
| | Average | | | 8.5 | | | (y)-1=( )-1= |

a - For use only when computer printout is not included

# Topside Inspection
## Environmental Quality Management, Inc.
## A K Steel, Middletown Works

Battery: Wilpulte  Oven Not Observed: _____  Co./EPA Personnel: /

Date: 5-9-18  Inoperable Ovens: _____  Certification Expiration Date: N/A

Shift: 7-3  Inspector: [signature]

Start Time 11:18 Hr:Min  End Time 11:21 Hr:Min

Start Time 11:21 Hr:Min  End Time 11:23 Hr:Min

Start Time 11:24 Hr:Min  End Time 11:27 Hr:Min

**PS Off Pass**

Actual T 2 m 15 s = ____ sec.

Allowable T=(304 sec)+(10 sec² ____ )= ____ %

| Oven # | Push Side Offtakes | | | Comments |
|---|---|---|---|---|
| 68 | D | I | | |
| 20 | D | I | | |
| 44 | D | I | | |
| | D | I | | |
| | D | I | | |
| | D | I | | |
| | D | I | | |
| | D | I | | |
| | D | I | | |
| | D | I | | |
| | D | I | | |
| | D | I | | |

**CS Off Pass**

Actual T 2 m 20 s = ____ sec

Allowable T=(304 sec)+(10 sec² ____ )= ____ %

| Oven # | Coke Side Offtakes | | | Comments |
|---|---|---|---|---|
| 68 | D | I | | |
| 20 | D | I | | |
| 44 | D | I | | |
| | D | I | | |
| | D | I | | |
| | D | I | | |
| | D | I | | |
| | D | I | | |
| | D | I | | |
| | D | I | | |
| | D | I | | |
| | D | I | | |

**Charge Lid Pass**

Actual T 2 m 20 s = ____ sec

Allowable T=(304 sec)+(10 sec² ____ )= ____ %

| Oven # | Charge Lids | | | | | Comments |
|---|---|---|---|---|---|---|
| 68 | D | I | 1 | 2 | 3 | |
| 20 | D | I | 1 | 2 | 3 | |
| 44 | D | I | 1 | 2 | 3 | |
| | D | I | 1 | 2 | 3 | |
| | D | I | 1 | 2 | 3 | |
| | D | I | 1 | 2 | 3 | |
| | D | I | 1 | 2 | 3 | |
| | D | I | 1 | 2 | 3 | |
| | D | I | 1 | 2 | 3 | |
| | D | I | 1 | 2 | 3 | |
| | D | I | 1 | 2 | 3 | |
| | D | I | 1 | 2 | 3 | |

D - Decarbonizing
I - Inoperable
B - Base Sand Seal
$F_H$ - Horizontal Flange
R - Riser Lid
G - Gooseneck
$F_V$ - Vertical Flange
V - Valve Body
3 - Observed Leak

$$PLL = \frac{\#\text{Leaking Lids}}{\#\text{Lids Observed}} = \frac{0}{228 - \underset{\text{In-op}}{6} - \underset{\text{LNO}}{3}} = \boxed{0\%} \text{ Lid Leaks} = 219$$

$$PLO = \frac{\#\text{Leaking Offtakes}}{\#\text{Offtakes Observed}} = \frac{0}{152 - \underset{\text{In-op OFF}}{4} - \underset{\text{ONO}}{2}} = \boxed{0\%} \text{ Leaking Offtakes} = 146$$

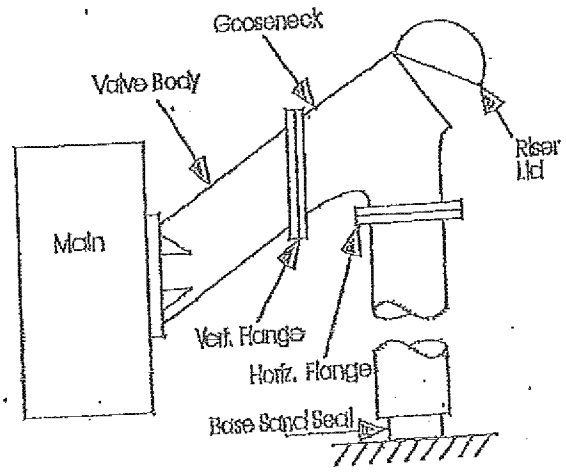


Total Lid Leaks: 0
Total Offtake Leaks: 0

# Door Inspection
## Environmental Quality Management, Inc.
## A.K Steel, Middletown Works

Battery: Wilputte  Door Not Observed: _____  Co./EPA Personnel: _____

Date: 5-9-18  Inoperable Ovens: _____  Inspector: Greg Wardell

Shift: 7-3  Certification Expiration Date: N/A

Start Time: 10:55 Hr:Min  Start Time: 11:01 Hr:Min
End Time: 10:57 Hr:Min  End Time: 11:02 Hr:Min

**Pusher Side**

Actual T: 3 m 05 s = _____ sec.

Allowable T=(304 sec)+(10 sec* _____ )= _____ sec

| Oven # | Doors | | | Comments |
|---|---|---|---|---|
| | D | C | PU | |
| | D | C | PU | |
| | D | C | PU | |
| | D | C | PU | |
| | D | C | PU | |
| | D | C | PU | |
| | D | C | PU | |
| | D | C | PU | |
| | D | C | PU | |
| | D | C | PU | |
| | D | C | PU | |
| | D | C | PU | |
| | D | C | PU | |
| | D | C | PU | |
| | D | C | PU | |
| | D | C | PU | |
| | D | C | PU | |
| | D | C | PU | |

**Coke Side**

Actual T: _____ m _____ s = _____ sec.

Allowable T=(304 sec)+(10 sec* _____ )= _____ sec

| Oven # | Doors | | Comments |
|---|---|---|---|
| 28 | D | PU | |
| 30 | D | PU | |
| 42 | D | PU | |
| 48 | D | PU | |
| 66 | D | PU | |
| | D | PU | |
| | D | PU | |
| | D | PU | |
| | D | PU | |
| | D | PU | |
| | D | PU | |
| | D | PU | |
| | D | PU | |
| | D | PU | |
| | D | PU | |
| | D | PU | |
| | D | PU | |
| | D | PU | |
| | D | PU | |

D - Door  PU - Point Up  C - Chuck

Total Leaks = 0 (PS) + 5 (CS) = 5

Doh = 152 - 4 (Inoperable Doors) - 0 (DNO) = 148

PLD = Door Leaks / Doh = 5 / 148 = 3.38 % Door Leaks

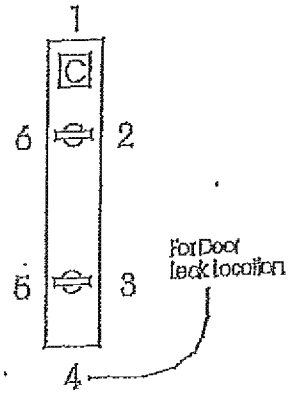

# A K Steel, Middletown Works

Battery: Wilpatte

Co./EPA Personnel: /

Date: 5-9-18

Inspector: Gary Woodside

Shift: 7-3

Certification Expiration Date: N/A

| Source | Coke Side Leak Location | Push Side Leak Location | Comments |
|---|---|---|---|
| 1. Spoon Hole Covers | OK | OK | |
| 2. Valve Body Flange/Damper Flange | OK | OK | |
| 3. Crossovers (4)/Flare Stacks (4) | OK | OK | |
| 4. Liquor Piping/Intakes & Steam | OK | OK | |

Regulator Back Pressure:
E 6 mm/$H_2O$ with avg. swings of 6 Last 8 hrs
W 7 mm/$H_2O$ with avg. swings of 6 Last 8 hrs

Remarks: Push Side | Coke Side

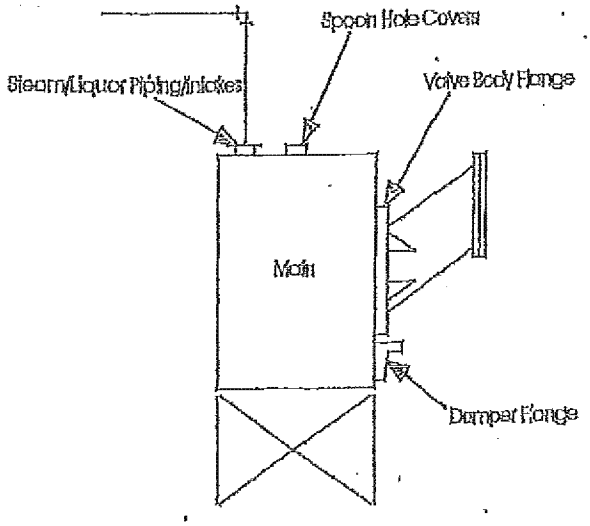


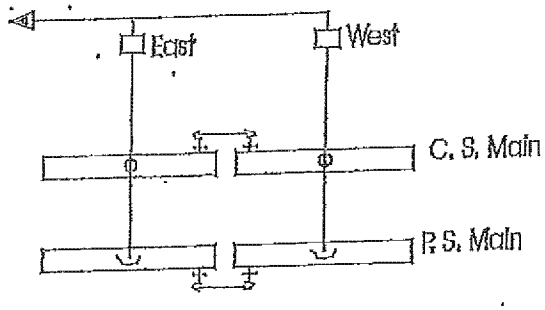

# DAILY REPORT
## ENVIRONMENTAL QUALITY MANAGEMENT, INC.
## A K STEEL, MIDDLETOWN WORKS

Date: 5/10/18

Location: Middletown C.P.

Inspector: Chaile Koeller

| | Battery | # Leaking | Total | % Leaking | % Allowable BPA Standards |
|---|---|---|---|---|---|
| Doors | Wilputte | 6 | 148 | 4.05 | 3.3% |
| Lids | Wilputte | 0 | 219 | 0 | 0.4% |
| Standpipes | Wilputte | 0 | 146 | 0 | 2.5% |

Observations (sec.)

| Wilputte |
|---|
| 8.5 |
| 6.0 |
| 5.0 |
| 7.5 |
| 13.0 |
| 44.0 |

Total: 88

Average: 12.0

Comments:

# Charging Inspection
## Environmental Quality Management, Inc.
## A K Steel, Middletown Works

Battery Wilpulte

Co./EPA Personnel

Inspector: Charles Lule

Date: 5/10/18

Certification Expiration Date: N/A

Shift: 7-3

Weather/Temp. Clear 82°

Start Time: 11:44 Hr:Min
End Time: 1:32 Hr:Min
Larry Car # EAST

| Charge Number | Oven # | Start Time | End Time | Visible Emission Seconds | Visible Emission (a) +1 Second | Lu Ve's (a) +1 Second | Comments |
|---|---|---|---|---|---|---|---|
| 1 | 38 | 11:44 | 11:50 | 8.5 | | | |
| 2 | 40 | 12:02 | 12:07 | 6.0 | | | #42 Charged out of service |
| 3 | 46 | 12:36 | 12:41 | 5.0 | | | #44 out for Repair |
| 4 | 48 | 12:58 | 1:03 | 7.5 | | | |
| 5 | 42 | 1:27 | 1:32 | 13.0 | | | |
| | | | | | | | |
| | | | | | | | |
| | | | | | | | |
| | | | | | | | |
| | | | | | | | |
| | Total 5 Charges | | | 44.0 | | | ÷5=y= |
| | Average | | | 8.8 | | | (a^y)-1=( )-1= |

a - For use only when computer printout is not included

# Topside Inspection
## Environmental Quality Management, Inc.
## A K Steel, Middletown Works

Battery: Wilputte  Oven Not Observed: _____  Co./EPA Personnel: _____

Date: 5/10/18  Inoperable Ovens: _____  Certification Expiration Date: N/A

Inspector: Charles Koeller

Shift: 7.3

Start Time 11:31 Hr:Min  End Time 11:33 Hr:Min

Start Time 11:34 Hr:Min  End Time 11:36 Hr:Min

Start Time 11:37 Hr:Min  End Time 11:40 Hr:Min

**PS Off Pass**

Actual T 2 m 25 s= ____ sec.

Allowable T=(304 sec)+(10 sec* ____ )= ____ %

| Oven # | Push Side Offtakes | | | Comments |
|---|---|---|---|---|
| 38 | D | I | | |
| 20 | D | I | | |
| 44 | D | I | | |
| | D | I | | |
| | D | I | | |
| | D | I | | |
| | D | I | | |
| | D | I | | |
| | D | I | | |
| | D | I | | |
| | D | I | | |
| | D | I | | |

**CS Off Pass**

Actual T 2 m 20 s= ____ sec

Allowable T=(304 sec)+(10 sec* ____ )= ____ %

| Oven # | Coke Side Offtakes | | | Comments |
|---|---|---|---|---|
| 38 | D | I | | |
| 20 | D | I | | |
| 44 | D | I | | |
| | D | I | | |
| | D | I | | |
| | D | I | | |
| | D | I | | |
| | D | I | | |
| | D | I | | |
| | D | I | | |
| | D | I | | |
| | D | I | | |

**Charge Lid Pass**

Actual T 2 m 26 s= ____ sec

Allowable T=(304 sec)+(10 sec* ____ )= ____ %

| Oven # | Charge Lids | | | | | Comments |
|---|---|---|---|---|---|---|
| 38 | D | I | 1 | 2 | 3 | |
| 20 | D | I | 1 | 2 | 3 | |
| 44 | D | I | 1 | 2 | 3 | |
| | D | I | 1 | 2 | 3 | |
| | D | I | 1 | 2 | 3 | |
| | D | I | 1 | 2 | 3 | |
| | D | I | 1 | 2 | 3 | |
| | D | I | 1 | 2 | 3 | |
| | D | I | 1 | 2 | 3 | |
| | D | I | 1 | 2 | 3 | |
| | D | I | 1 | 2 | 3 | |
| | D | I | 1 | 2 | 3 | |

D - Decarbonizing
I - Inoperable
B - Base Sand Seal
$F_H$ - Horizontal Flange
R - Riser Lid
G - Gooseneck
$F_V$ - Vertical Flange
V - Valve Body
3 - Observed Leak

$$PLL = \frac{\#\text{Leaking Lids}}{\#\text{Lids Observed}} = \frac{0}{228 - \underset{\text{in-op}}{6} - \underset{\text{LNO}}{3}} = \boxed{0\%} = 219$$ Lid Leaks

$$PLO = \frac{\#\text{Leaking Offtakes}}{\#\text{Offtakes Observed}} = \frac{0}{152 - \underset{\text{in-op OFF}}{4} - \underset{\text{ONO}}{2}} = \boxed{0\%} = 146$$ Leaking Offtakes

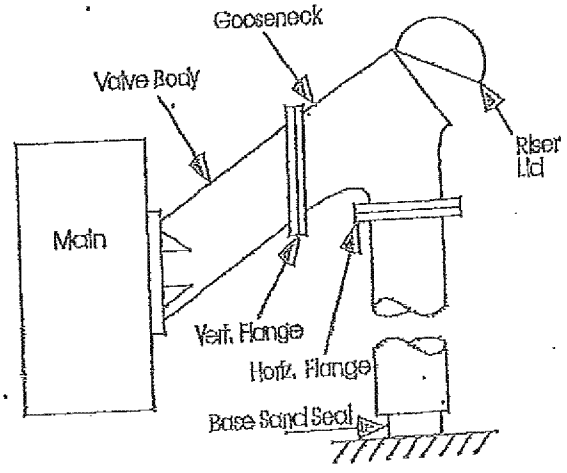


Total Lid Leaks: 0
Total Offtake Leaks: 0

# Door Inspection
## Environmental Quality Management, Inc.
## A.K Steel, Middletown Works

Battery: Wilpulte  Door Not Observed: _____  Co./EPA Personnel: _____

Date: 5/10/18  Inoperable Ovens: _____  Inspector: [illegible]

Shift: 7-3  Certification Expiration Date: N/A

Start Time: 11:03 Hr:Min  End Time: 11:06 Hr:Min

Start Time: 11:10 Hr:Min  End Time: 11:14 Hr:Min

**Pusher Side**

Actual T: 3 m 00 s= _____ sec.

Allowable T=(304 sec)+(10 sec* _____ )= _____ sec

| Oven # | Doors | | | Comments |
|---|---|---|---|---|
| | D | C | PU | |
| | D | C | PU | |
| | D | C | PU | |
| | D | C | PU | |
| | D | C | PU | |
| | D | C | PU | |
| | D | C | PU | |
| | D | C | PU | |
| | D | C | PU | |
| | D | C | PU | |
| | D | C | PU | |
| | D | C | PU | |
| | D | C | PU | |
| | D | C | PU | |
| | D | C | PU | |
| | D | C | PU | |
| | D | C | PU | |
| | D | C | PU | |
| | D | C | PU | |
| | D | C | PU | |

**Coke Side**

Actual T: 4 m 06 s= _____ sec.

Allowable T=(304 sec)+(10 sec* _____ )= _____ sec

| Oven # | Doors | | Comments |
|---|---|---|---|
| 16 | D | PU | |
| 19 | D | PU | |
| 30 | D | PU | |
| 38 | D | PU | |
| 65 | D | PU | |
| 69 | D | PU | |
| | D | PU | |
| | D | PU | |
| | D | PU | |
| | D | PU | |
| | D | PU | |
| | D | PU | |
| | D | PU | |
| | D | PU | |
| | D | PU | |
| | D | PU | |
| | D | PU | |
| | D | PU | |
| | D | PU | |

D - Door  PU - Point Up  C - Chuck

Total Leaks = 0 (PS) + 6 (CS) = 6

Doh = 152 - 4 (Inoperable Doors) - 0 (DNO) = 148

PLD = Door Leaks / Doh = 6 / 148 = 4.05 % Door Leaks

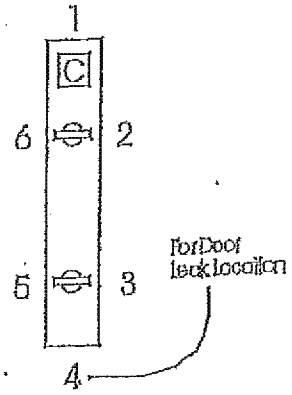

# A K Steel, Middletown Works

Battery: Wilpulte

Co./EPA Personnel

Date: 5/10/18

Inspector: [signature]

Shift: 7-3

Certification Expiration Date: N/A

| Source | Coke Side Leak Location | Push Side Leak Location | Comments |
|---|---|---|---|
| 1. Spoon Hole Covers | OK | OK | |
| 2. Valve Body Flange/Damper Flange | OK | OK | |
| 3. Crossovers (4)/Flare Stacks (4) | OK | OK | |
| 4. Liquor Piping/Intakes & Steam | OK | OK | |

Regulator Back Pressure:
E 7 mm/$H_2O$ with avg. swings of 6 Last 8 hrs
W 7 mm/$H_2O$ with avg. swings of 6 Last 8 hrs

Remarks: Push Side | Coke Side

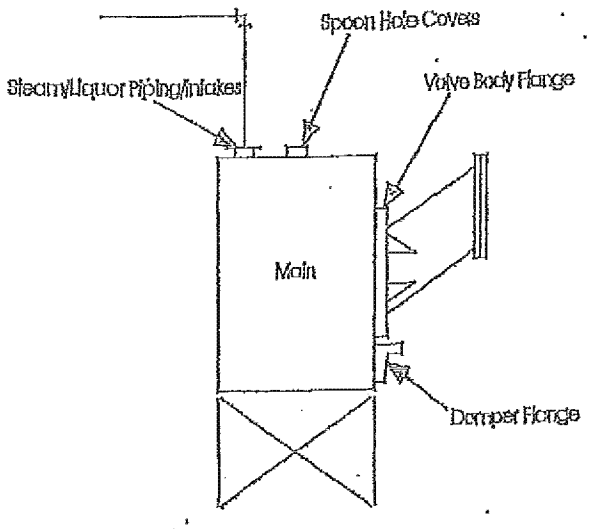


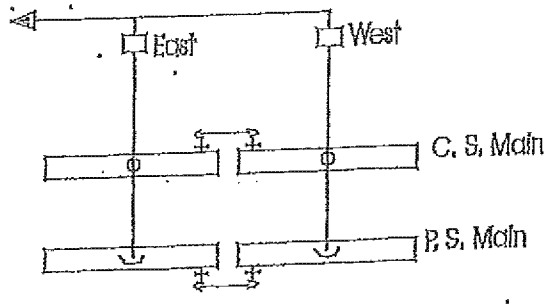

# DAILY REPORT
## ENVIRONMENTAL QUALITY MANAGEMENT, INC.
## A.K. STEEL, MIDDLETOWN WORKS

Date: 5/11/18

Location: Middletown C.P.

Inspector: Charles Bowlu

| | Battery | # Leaking | Total | % Leaking | % Allowable BPA Standards |
|---|---|---|---|---|---|
| Doors | Wilputte | 3 | 150 | 2.00 | 3.3% |
| Lids | Wilputte | 1 | 222 | .46 | 0.4% |
| Standpipes | Wilputte | 1 | 148 | .68 | 2.5% |

| Observations (sec.) Wilputte |
|---|
| 14.5 |
| 5.5 |
| 10.0 |
| 6.0 |
| 7.0 |
| 43.0 |

Total: 8.6

Average: 12.0

Comments:

# Charging Inspection
## Environmental Quality Management, Inc.
## A.K. Steel, Middletown Works

Battery: Wilpatie

Date: 5/11/18

Shift: 7-3

Start Time: 11:43 Hr:Min

End Time: 12:49 Hr:Min

Larry Car #: 5751

Co./EPA Personnel

Inspector: [illegible]

Certification Expiration Date: N/A

Weather/Temp. Clear 80°

| Charge Number | Oven # | Start Time | End Time | Visible Emission Seconds | Visible Emission (a) +1 Second | Ln Ve's (a) +1 Second | Comments |
|---|---|---|---|---|---|---|---|
| 1 | 8 | 11:43 | 11:48 | 14.5 | | | |
| 2 | 44 | 11:54 | 11:59 | 5.5 | | | |
| 3 | 16 | 12:17 | 12:22 | 10.0 | | | |
| 4 | 12 | 12:30 | 12:35 | 6.0 | | | |
| 5 | 14 | 12:44 | 12:49 | 7.0 | | | |
| | | | | | | | |
| | | | | | | | |
| | | | | | | | |
| | | | | | | | |
| | | | | | | | |
| | | | | | | | +5=y= |
| | Total 5 Charges | | | 43.0 | | | |
| | Average | | | 8.6 | | | (e^y)-1=( )-1= |

[a] - For use only when computer printout is not included

# Topside Inspection
## Environmental Quality Management, Inc.
## A K Steel, Middletown Works

Battery: Wilputte  Oven Not Observed: _____  Co./EPA Personnel: 1

Date: 5/11/18  Inoperable Ovens: _____  Certification Expiration Date: N/A

Inspector: Chuck Koeller

Shift: 7.3

Start Time 11:29 Hr:Min  End Time 11:31 Hr:Min

Start Time 11:32 Hr:Min  End Time 11:34 Hr:Min

Start Time 11:35 Hr:Min  End Time 11:38 Hr:Min

**PS Off Pass**
Actual T 2 m 20 s= ____ sec.
Allowable T=(304 sec)+(10 sec* ____ )= ____ %

| Oven # | Push Side Offtakes | Comments |
|---|---|---|
| 8 | D I | |
| 20 | D I | |
| | D I | |
| | D I | |
| | D I | |
| | D I | |
| | D I | |
| | D I | |
| | D I | |
| | D I | |
| | D I | |
| | D I | |

**CS Off Pass**
Actual T 2 m 25 s= ____ sec
Allowable T=(304 sec)+(10 sec* ____ )= ____ %

| Oven # | Coke Side Offtakes | Comments |
|---|---|---|
| 8 | D I | |
| 20 | D I | |
| | D I | |
| 71 | D I | R |
| | D I | |
| | D I | |
| | D I | |
| | D I | |
| | D I | |
| | D I | |
| | D I | |
| | D I | |

**Charge Lid Pass**
Actual T 2 m 30 s= ____ sec
Allowable T=(304 sec)+(10 sec* ____ )= ____ %

| Oven # | Charge Lids | Comments |
|---|---|---|
| 8 | D I 1 2 3 | |
| 20 | D I 1 2 3 | |
| | D I 1 2 3 | |
| 2 | D I 1 2 3 | |
| | D I 1 2 3 | |
| | D I 1 2 3 | |
| | D I 1 2 3 | |
| | D I 1 2 3 | |
| | D I 1 2 3 | |
| | D I 1 2 3 | |
| | D I 1 2 3 | |
| | D I 1 2 3 | |

D - Decarbonizing
I - Inoperable
B - Base Sand Seal
$F_H$ - Horizontal Flange
R - Riser Lid
G - Gooseneck
$F_V$ - Vertical Flange
V - Valve Body
3 - Observed Leak

$$PLL = \frac{\#\text{Leaking Lids}}{\#\text{Lids Observed}} = \frac{1}{228 - \underset{\text{In-op}}{3} - \underset{\text{LNO}}{3}} = \boxed{.46\%} \text{ Lid Leaks} = 222$$

$$PLO = \frac{\#\text{Leaking Offtakes}}{\#\text{Offtakes Observed}} = \frac{1}{152 - \underset{\text{In-op OFF}}{2} - \underset{\text{ONO}}{2}} = \boxed{.68\%} \text{ Leaking Offtakes} = 148$$

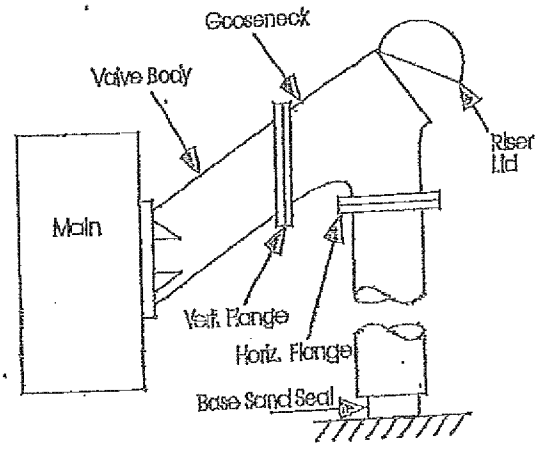


Total Lid Leaks: 1
Total Offtake Leaks: 1

# Door Inspection
## Environmental Quality Management, Inc.
## A K Steel, Middletown Works

Battery: Wilputte  Door Not Observed: _____  Co./EPA Personnel: _____

Date: 5/11/18  Inoperable Ovens: _____  Inspector: [illegible]

Shift: 7-3  Certification Expiration Date: N/A

Start Time: 11:04 Hr:Min  End Time: 11:07 Hr:Min

Start Time: 11:11 Hr:Min  End Time: 11:15 Hr:Min

Pusher Side — Actual T: 3 m 00 s = _____ sec.

Allowable T=(304 sec)+(10 sec* _____ )= _____ sec

Coke Side — Actual T: 3 m 30 s = _____ sec.

Allowable T=(304 sec)+(10 sec* _____ )= _____ sec

| Oven # | Doors | | | Comments |
|---|---|---|---|---|
| | D | C | PU | |
| | D | C | PU | |
| | D | C | PU | |
| | D | C | PU | |
| | D | C | PU | |
| | D | C | PU | |
| | D | C | PU | |
| | D | C | PU | |
| | D | C | PU | |
| | D | C | PU | |
| | D | C | PU | |
| | D | C | PU | |
| | D | C | PU | |
| | D | C | PU | |
| | D | C | PU | |
| | D | C | PU | |
| | D | C | PU | |
| | D | C | PU | |
| | D | C | PU | |
| | D | C | PU | |
| | D | C | PU | |
| | D | C | PU | |

| Oven # | Doors | | Comments |
|---|---|---|---|
| 31 | D | ~~PU~~ | |
| 33 | D | ~~PU~~ | |
| 69 | D | ~~PU~~ | |
| | D | PU | |
| | D | PU | |
| | D | PU | |
| | D | PU | |
| | D | PU | |
| | D | PU | |
| | D | PU | |
| | D | PU | |
| | D | PU | |
| | D | PU | |
| | D | PU | |
| | D | PU | |
| | D | PU | |
| | D | PU | |
| | D | PU | |
| | D | PU | |
| | D | PU | |
| | D | PU | |

D - Door  PU - Point Up  C - Check

Total Leaks = 0 (PS) + 3 (CS) = 3

Dob = 152 - 2 (Inoperable Doors) - 0 (DNO) = 150

PLD = Door Leaks / Dob = 3 / 150 = 200 % Door Leaks

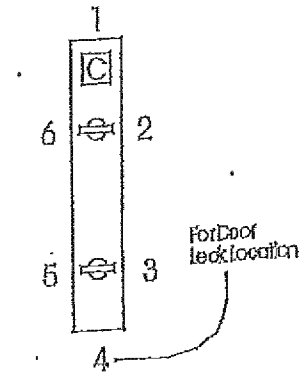

# A K Steel, Middletown Works

Battery: Wilputte

Co./EPA Personnel: [illegible]

Date: 5/11/18

Inspector: Chad Koch

Shift: 2-3

Certification Expiration Date: N/A

| Source | Coke Side Leak Location | Push Side Leak Location | Comments |
|---|---|---|---|
| 1. Spoon Hole Covers | OK | OK | |
| 2. Valve Body Flange/Damper Flange | OK | OK | |
| 3. Crossovers (4)/Flare Stacks (4) | OK | OK | |
| 4. Liquor Piping/Intakes & Steam | OK | OK | |

Regulator Back Pressure:
E 7 mm/$H_2O$ with avg. swings of 6 Last 8 hrs
W 7 mm/$H_2O$ with avg. swings of 6 Last 8 hrs

Remarks: Push Side | Coke Side

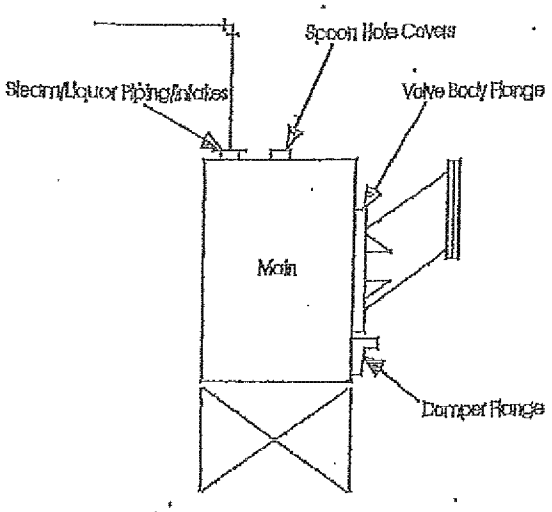


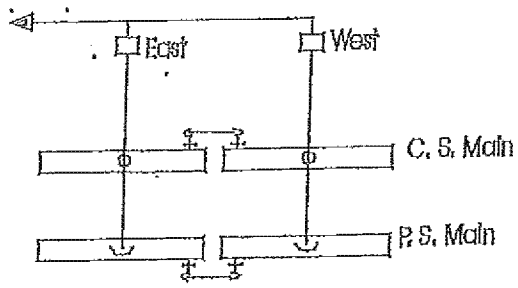

# DAILY REPORT
## ENVIRONMENTAL QUALITY MANAGEMENT, INC.
## A K STEEL, MIDDLETOWN WORKS

Date: 5/12/18

Location: Middletown C.P.

Inspector: Charlie Boecker

| | Battery | # Leaking | Total | % Leaking | % Allowable EPA Standards |
|---|---|---|---|---|---|
| Doors | Wilputte | 6 | 150 | 4.00 | 3.3% |
| Lids | Wilputte | 0 | 222 | 0 | 0.4% |
| Standpipes | Wilputte | 0 | 148 | 0 | 2.5% |

Observations (sec.)

| Wilputte |
|---|
| 21.0 |
| 15.0 |
| 24.5 |
| 18.0 |
| 21.0 |
| 99.5 |

Total: 19.9

Average: 12.0

Comments:

# Charging Inspection
## Environmental Quality Management, Inc.
## A.K Steel, Middletown Works

Battery: Wilpulis

Date: 5/12/18

Shift: 7-3

Start Time: 11:27 Hr:Min

End Time: 12:28 Hr:Min

Larry Car #: EAST

Co/BPA Personnel

Inspector: [illegible]

Certification Expiration Date: N/A

Weather/Temp. Clear 84°

| Charge Number | Oven # | Start Time | End Time | Visible Emission Seconds | Visible Emission (a) +1 Second | In Ve's (a) +1 Second | Comments |
|---|---|---|---|---|---|---|---|
| 1 | 55 | 11:27 | 11:32 | 21.0 | | | |
| 2 | 57 | 11:47 | 11:53 | 15.0 | | | |
| 3 | 59 | 11:59 | 12:04 | 24.5 | | | |
| 4 | 61 | 12:10 | 12:15 | 18.0 | | | |
| 5 | 63 | 12:20 | 12:25 | 21.0 | | | |
| | | | | | | | |
| | | | | | | | |
| | | | | | | | |
| | | | | | | | |
| | | | | | | | ÷5=y= |
| | Total 5 Charges | | | 99.5 | | | |
| | Average | | | 19.9 | | | (a)-1=( )-1= |

a - For use only when computer printout is not included

# Topside Inspection
## Environmental Quality Management, Inc.
## A K Steel, Middletown Works

Battery: Wilpulte  Oven Not Observed: _____  Co./EPA Personnel: _____

Certification Expiration Date: N/A

Date: 5/12/18  Inoperable Ovens: _____  Inspector: [signature]

Shift: 7-3

Start Time 11:15 Hr:Min  End Time 11:17 Hr:Min

Start Time 11:18 Hr:Min  End Time 11:20 Hr:Min

Start Time 11:21 Hr:Min  End Time 11:24 Hr:Min

**PS Off Pass**

Actual T 2 m 20 s= ____ sec.

Allowable T=(304 sec)+(10 sec* ____ )= ____ %

| Oven # | Push Side Offtakes | | Comments |
|---|---|---|---|
| 55 | D | I | |
| 20 | D | I | |
| | D | I | |
| | D | I | |
| | D | I | |
| | D | I | |
| | D | I | |
| | D | I | |
| | D | I | |
| | D | I | |
| | D | I | |
| | D | I | |

**CS Off Pass**

Actual T 2 m 15 s= ____ sec

Allowable T=(304 sec)+(10 sec* ____ )= ____ %

| Oven # | Coke Side Offtakes | | Comments |
|---|---|---|---|
| 55 | D | I | |
| 20 | D | I | |
| | D | I | |
| | D | I | |
| | D | I | |
| | D | I | |
| | D | I | |
| | D | I | |
| | D | I | |
| | D | I | |
| | D | I | |
| | D | I | |

**Charge Lid Pass**

Actual T 2 m 20 s= ____ sec

Allowable T=(304 sec)+(10 sec* ____ )= ____ %

| Oven # | Charge Lids | | | | | Comments |
|---|---|---|---|---|---|---|
| 55 | D | I | 1 | 2 | 3 | |
| 20 | D | I | 1 | 2 | 3 | |
| | D | I | 1 | 2 | 3 | |
| | D | I | 1 | 2 | 3 | |
| | D | I | 1 | 2 | 3 | |
| | D | I | 1 | 2 | 3 | |
| | D | I | 1 | 2 | 3 | |
| | D | I | 1 | 2 | 3 | |
| | D | I | 1 | 2 | 3 | |
| | D | I | 1 | 2 | 3 | |
| | D | I | 1 | 2 | 3 | |
| | D | I | 1 | 2 | 3 | |

D - Decarbonizing
I - Inoperable
B - Base Sand Seal
$F_H$ - Horizontal Flange
R - Riser Lid
G - Gooseneck
$F_V$ - Vertical Flange
V - Valve Body
3 - Observed Leak

$$PLL = \frac{\#\text{Leaking Lids}}{\#\text{Lids Observed}} = \frac{0}{228 - \underset{\text{In-op}}{3} - \underset{\text{LNO}}{3}} = \boxed{0\%} \text{ Lid Leaks} = 222$$

$$PLO = \frac{\#\text{Leaking Offtakes}}{\#\text{Offtakes Observed}} = \frac{0}{152 - \underset{\text{In-op OFF}}{2} - \underset{\text{ONO}}{2}} = \boxed{0\%} \text{ Leaking Offtakes} = 148$$

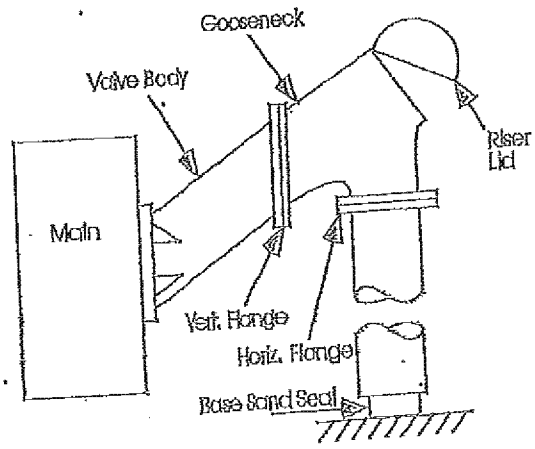


Total Lid Leaks: 0
Total Offtake Leaks: 0

# Door Inspection
## Environmental Quality Management, Inc.
## A.K. Steel, Middletown Works

Battery: Wilpulte  Door Not Observed: _____  Co./EPA Personnel: _____

Date: 5/12/18  Inoperable Ovens: _____  Inspector: Charlie Kelly

Shift: 7-3  Certification Expiration Date: N/A

Start Time: 11:54 Hr:Min  End Time: 11:57 Hr:Min

Start Time: 11:00 Hr:Min  End Time: 11:04 Hr:Min

**Pusher Side**

Actual T: 3 m 00 s = _____ sec.

Allowable T=(304 sec)+(10 sec* _____ )= _____ sec

| Oven # | Doors | | | Comments |
|---|---|---|---|---|
| | D | C | PU | |
| | D | C | PU | |
| | D | C | PU | |
| | D | C | PU | |
| | D | C | PU | |
| | D | C | PU | |
| | D | C | PU | |
| | D | C | PU | |
| | D | C | PU | |
| | D | C | PU | |
| | D | C | PU | |
| | D | C | PU | |
| | D | C | PU | |
| | D | C | PU | |
| | D | C | PU | |
| | D | C | PU | |
| | D | C | PU | |
| | D | C | PU | |

**Coke Side**

Actual T: 4 m 00 s = _____ sec.

Allowable T=(304 sec)+(10 sec* _____ )= _____ sec

| Oven # | Doors | | Comments |
|---|---|---|---|
| 15 | D | PU | |
| 19 | D | PU | |
| 31 | D | PU | |
| 33 | D | PU | |
| 41 | D | PU | |
| 64 | D | PU | |
| | D | PU | |
| | D | PU | |
| | D | PU | |
| | D | PU | |
| | D | PU | |
| | D | PU | |
| | D | PU | |
| | D | PU | |
| | D | PU | |
| | D | PU | |
| | D | PU | |
| | D | PU | |

D - Door  PU - Point Up  C - Chuck

Total Leaks = 0 (PS) + 6 (CS) = 6

Dob = 152 - 2 (Inoperable Doors) - 0 (DNO) = 150

FLD = Door Leaks / Dob = 6 / 150 = 4.00 % Door Leaks

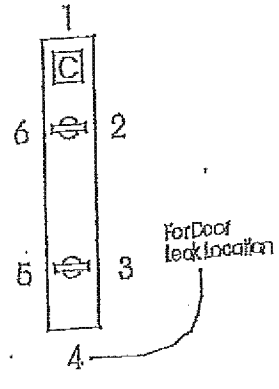

# A.K Steel, Middletown Works

Battery: Wilputte

Co./EPA Personnel: [illegible]

Date: 5/12/18

Inspector: [illegible]

Shift: 7-3

Certification Expiration Date: N/A

| Source | Coke Side Leak Location | Push Side Leak Location | Comments |
|---|---|---|---|
| 1. Spoon Hole Covers | O/K | O/K | |
| 2. Valve Body Flange/Damper Flange | O/K | O/K | |
| 3. Crossovers (4)/Flare Stacks (4) | O/K | O/K | |
| 4. Liquor Piping/Intakes & Steam | O/K | O/K | |

Regulator:
Back Pressure: E 7 mm/$H_2O$ with avg. swings of 6 Last 8 hrs
W 7 mm/$H_2O$ with avg. swings of 6 Last 8 hrs

Remarks: Push Side | Coke Side

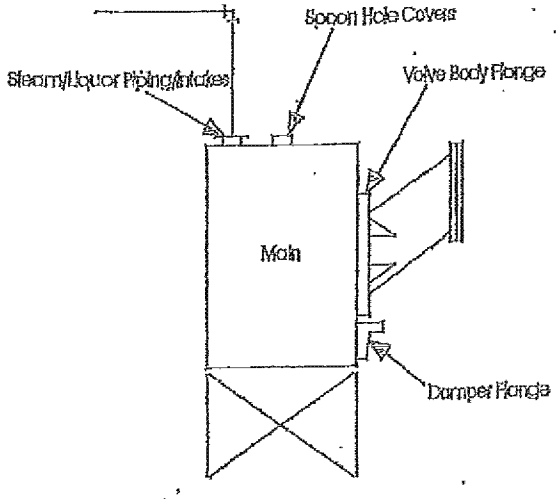


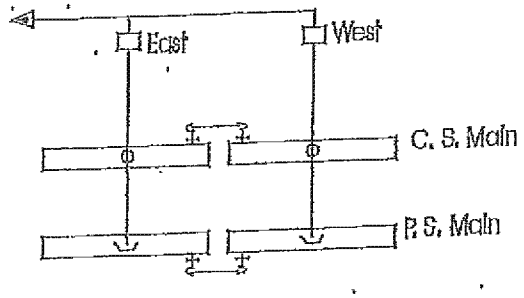

# DAILY REPORT
## ENVIRONMENTAL QUALITY MANAGEMENT, INC.
## A.K. STEEL, MIDDLETOWN WORKS

Date: 5/13/18

Location: Middletown C.P.

Inspector: Charles Koeller

| | Battery | # Leaking | Total | % Leaking | % Allowable EPA Standards |
|---|---|---|---|---|---|
| Doors | Wilputte | 6 | 150 | 4.00 | 3.3% |
| Lids | Wilputte | 0 | 222 | 0 | 0.4% |
| Standpipes | Wilputte | 6 | 148 | 0 | 2.5% |

Observations (sec.)

| Wilputte |
|---|
| 5.5 |
| 4.5 |
| 6.0 |
| 6.0 |
| 5.0 |
| 27.0 |

Total: 5.4

Average: 12.0

Comments:

# Charging Inspection
## Environmental Quality Management, Inc.
## A K Steel, Middletown Works

Co./EPA Personnel

Battery: Wilputte

Inspector: [illegible]

Date: 5/13/18

Certification Expiration Date: N/A

Shift: 7-3

Weather/Temp. Clear 85°

Start Time: 11:23 Hr:Min

End Time: 12:30 Hr:Min

Larry Car #: EAST

| Charge Number | Oven # | Start Time | End Time | Visible Emission Seconds | Visible Emission (a) +1 Second | In Vo's (a) +1 Second | Comments |
|---|---|---|---|---|---|---|---|
| 1 | 25 | 11:23 | 11:28 | 5.5 | | | |
| 2 | 27 | 11:45 | 11:50 | 4.5 | | | |
| 3 | 29 | 11:59 | 12:04 | 6.0 | | | |
| 4 | 31 | 12:11 | 12:16 | 6.0 | | | |
| 5 | 33 | 12:25 | 12:30 | 5.0 | | | |
| | | | | | | | |
| | | | | | | | |
| | | | | | | | |
| | | | | | | | |
| | | | | | | | |
| | | | | | | | ÷5=y= |
| | Total 5 Charges | | | 27.0 | | | (a)-1=( )-1= |
| | Average | | | 5.4 | | | |

a - For use only when computer printout is not included

# Topside Inspection
## Environmental Quality Management, Inc.
## A K Steel, Middletown Works

Battery: Wilputte  Oven Not Observed: _____  Co./EPA Personnel: 1

Date: 5/13/19  Inoperable Ovens: _____  Certification Expiration Date: N/A

Shift: 7-3  Inspector: Charles Kelle

Start Time 11:12 Hr:Min  End Time 11:14 Hr:Min

Start Time 11:15 Hr:Min  End Time 11:17 Hr:Min

Start Time 11:18 Hr:Min  End Time 11:21 Hr:Min

**PS Off Pass**
Actual T 2 m 20 s = ____ sec
Allowable T=(304 sec)+(10 sec* ____ )= ____ %

| Oven # | Push Side Offtakes | | Comments |
|---|---|---|---|
| 25 | D | I | |
| 20 | D | I | |
| | D | I | |
| | D | I | |
| | D | I | |
| | D | I | |
| | D | I | |
| | D | I | |
| | D | I | |
| | D | I | |
| | D | I | |
| | D | I | |

**CS Off Pass**
Actual T 2 m 20 s = ____ sec
Allowable T=(304 sec)+(10 sec* ____ )= ____ %

| Oven # | Coke Side Offtakes | | Comments |
|---|---|---|---|
| 25 | D | I | |
| 20 | D | I | |
| | D | I | |
| | D | I | |
| | D | I | |
| | D | I | |
| | D | I | |
| | D | I | |
| | D | I | |
| | D | I | |
| | D | I | |
| | D | I | |

**Charge Lid Pass**
Actual T 2 m 20 s = ____ sec
Allowable T=(304 sec)+(10 sec* ____ )= ____ %

| Oven # | Charge Lids | | | | | Comments |
|---|---|---|---|---|---|---|
| 25 | D | I | 1 | 2 | 3 | |
| 20 | D | I | 1 | 2 | 3 | |
| | D | I | 1 | 2 | 3 | |
| | D | I | 1 | 2 | 3 | |
| | D | I | 1 | 2 | 3 | |
| | D | I | 1 | 2 | 3 | |
| | D | I | 1 | 2 | 3 | |
| | D | I | 1 | 2 | 3 | |
| | D | I | 1 | 2 | 3 | |
| | D | I | 1 | 2 | 3 | |
| | D | I | 1 | 2 | 3 | |
| | D | I | 1 | 2 | 3 | |

D - Decarbonizing
I - Inoperable
B - Base Sand Seal
$F_H$ - Horizontal Flange
R - Riser Lid
G - Gooseneck
$F_V$ - Vertical Flange
V - Valve Body
3 - Observed Leak

$$PLL = \frac{\#\text{Leaking Lids}}{\#\text{Lids Observed}} = \frac{0}{228 - \underset{\text{In-op}}{3} - \underset{\text{LNO}}{3}} = \boxed{0\%} \text{ Lid Leaks} = 222$$

$$PLO = \frac{\#\text{Leaking Offtakes}}{\#\text{Offtakes Observed}} = \frac{0}{152 - \underset{\text{In-op OFF}}{2} - \underset{\text{ONO}}{2}} = \boxed{0\%} \text{ Leaking Offtakes} = 148$$

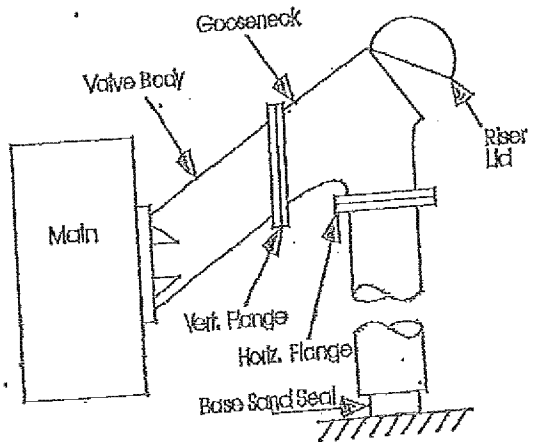


Total Lid Leaks: 0
Total Offtake Leaks: 0

# Door Inspection
## Environmental Quality Management, Inc.
## A K Steel, Middletown Works

Battery: Wilputte  Door Not Observed: _____  Co./EPA Personnel: _____

Date: 5/13/18  Inoperable Ovens: _____  Inspector: [illegible]

Shift: 7-3  Certification Expiration Date: N/A

Start Time: 10:52 Hr:Min  Start Time: 10:58 Hr:Min
End Time: 10:55 Hr:Min  End Time: 11:02 Hr:Min

**Pusher Side**

Actual T: 3 m 10 s = _____ sec.

Allowable T=(304 sec)+(10 sec* _____ )= _____ sec

| Oven # | Doors | | | Comments |
|---|---|---|---|---|
| 44 | D | C | PU | |
| | D | C | PU | |
| | D | C | PU | |
| | D | C | PU | |
| | D | C | PU | |
| | D | C | PU | |
| | D | C | PU | |
| | D | C | PU | |
| | D | C | PU | |
| | D | C | PU | |
| | D | C | PU | |
| | D | C | PU | |
| | D | C | PU | |
| | D | C | PU | |
| | D | C | PU | |
| | D | C | PU | |
| | D | C | PU | |
| | D | C | PU | |

**Coke Side**

Actual T: 3 m 50 s = _____ sec.

Allowable T=(304 sec)+(10 sec* _____ )= _____ sec

| Oven # | Doors | | Comments |
|---|---|---|---|
| 22 | D | PU | |
| 48 | D | PU | |
| 60 | D | PU | |
| 64 | D | PU | |
| 76 | D | PU | |
| | D | PU | |
| | D | PU | |
| | D | PU | |
| | D | PU | |
| | D | PU | |
| | D | PU | |
| | D | PU | |
| | D | PU | |
| | D | PU | |
| | D | PU | |
| | D | PU | |
| | D | PU | |
| | D | PU | |
| | D | PU | |

D - Door  PU - Point Up  C - Chuck

Total Leaks = 1 (PS) + 5 (CS) = 6

Doh = 152 - 2 (Inoperable Doors) - 0 (DNO) = 150

PLD = Door Leaks / Doh = 6 / 150 = 4.00 % Door Leaks

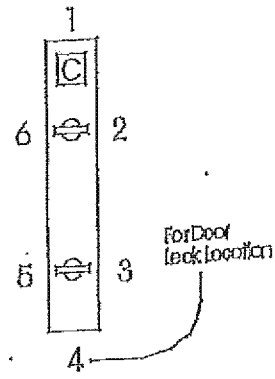

# AK Steel, Middletown Works

Battery: Whipple

Co./BPA Personnel

Date: 5/13/18

Inspector: Charles Keable

Shift: 7-3

Certification Expiration Date: N/A

| Source | Coke Side Leak Location | Push Side Leak Location | Comments |
|---|---|---|---|
| 1. Spoon Hole Covers | O/K | O/K | |
| 2. Valve Body Flange/Damper Flange | O/K | O/K | |
| 3. Crossovers (4)/Flare Stacks (4) | O/K | O/K | |
| 4. Liquor Piping/Intakes & Steam | O/K | O/K | |

Regulator Back Pressure:

| | | | | |
|---|---|---|---|---|
| H | 7 mm/$H_2O$ with avg. swings of | 6 | | Last 8 hrs |
| W | 7 mm/$H_2O$ with avg. swings of | 6 | | Last 8 hrs |

Remarks: Push Side

Coke Side

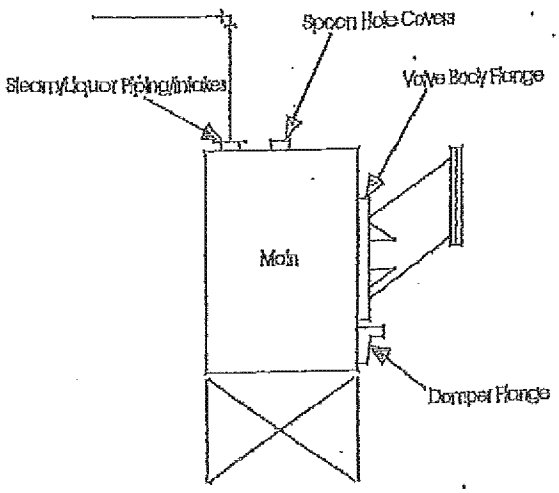


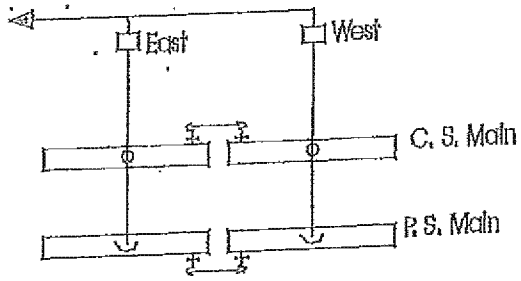

# DAILY REPORT
## ENVIRONMENTAL QUALITY MANAGEMENT, INC.
## A K STEEL, MIDDLETOWN WORKS

Date: 5/14/18

Location: Middletown C.P.

Inspector: Charles Farell

| | Battery | # Leaking | Total | % Leaking | % Allowable EPA Standards |
|---|---|---|---|---|---|
| Doors | Wilputte | 4 | 150 | 2.67 | 3.3% |
| Lids | Wilputte | 0 | 222 | 0 | 0.4% |
| Standpipes | Wilputte | 0 | 148 | 0 | 2.5% |

| | Observations (sec.) Wilputte | |
|---|---|---|
| | 6.5 | |
| | 9.0 | |
| | 11.5 | |
| | 6.0 | |
| | 9.5 | |
| | 42.5 | |
| Total: | 8.5 | 12.0 |

Average:

Comments:

# Charging Inspection
## Environmental Quality Management, Inc.
## A K Steel, Middletown Works

Battery: Wilputte

Co./EPA Personnel: /

Date: 5/14/18

Inspector: Charles Kuhl

Shift: 7-3

Certification Expiration Date: N/A

Weather/Temp. Clear 87°

Start Time: 11:33 Hr:Min

End Time: 12:48 Hr:Min

Larry Car #: EAST

| Charge Number | Oven # | Start Time | End Time | Visible Emission Seconds | Visible Emission (a) +1 Second | Ln Ve's (a) +1 Second | Comments |
|---|---|---|---|---|---|---|---|
| 1 | 70 | 11:33 | 11:38 | 6.5 | | | Charges out of series |
| 2 | 74 | 11:48 | 11:53 | 9.0 | | | |
| 3 | 76 | 12:09 | 12:14 | 11.5 | | | |
| 4 | 1 | 12:24 | 12:29 | 6.0 | | | |
| 5 | 3 | 12:43 | 12:48 | 9.5 | | | |
| | | | | | | | |
| | | | | | | | |
| | | | | | | | |
| | | | | | | | |
| | | | | | | | |
| | Total 5 Charges | | | 42.5 | | | ÷5=y= |
| | Average | | | 8.5 | | | $(e^y)-1=(\quad)-1=$ |

a - For use only when computer printout is not included

# Topside Inspection
## Environmental Quality Management, Inc.
## A.K. Steel, Middletown Works

Battery: Wilputte  Oven Not Observed: _____  Co./EPA Personnel: /

Date: 5/14/18  Inoperable Ovens: _____  Certification Expiration Date: N/A

Inspector: [illegible]

Shift: 7-3

Start Time 1121 Hr:Min  End Time 1123 Hr:Min

Start Time 1124 Hr:Min  End Time 1126 Hr:Min

Start Time 1127 Hr:Min  End Time 1130 Hr:Min

PS Off Pass — Actual T: 2 m 20 s = ____ sec.  Allowable T=(304 sec)+(10 sec) ____ )= ____%

CS Off Pass — Actual T: 2 m 10 s = ____ sec  Allowable T=(304 sec)+(10 sec) ____ )= ____%

Charge Lid Pass — Actual T: 2 m 20 s = ____ sec  Allowable T=(304 sec)+(10 sec) ____ )= ____%

| Oven # | Push Side Offtakes | | Comments |
|---|---|---|---|
| 70 | D | I | |
| 20 | D | I | |
| | D | I | |
| | D | I | |
| | D | I | |
| | D | I | |
| | D | I | |
| | D | I | |
| | D | I | |
| | D | I | |
| | D | I | |
| | D | I | |

| Oven # | Coke Side Offtakes | | Comments |
|---|---|---|---|
| 70 | D | I | |
| 20 | D | I | |
| | D | I | |
| | D | I | |
| | D | I | |
| | D | I | |
| | D | I | |
| | D | I | |
| | D | I | |
| | D | I | |
| | D | I | |
| | D | I | |

| Oven # | Charge Lids | | | | | Comments |
|---|---|---|---|---|---|---|
| 70 | D | I | 1 | 2 | 3 | |
| 20 | D | I | 1 | 2 | 3 | |
| | D | I | 1 | 2 | 3 | |
| | D | I | 1 | 2 | 3 | |
| | D | I | 1 | 2 | 3 | |
| | D | I | 1 | 2 | 3 | |
| | D | I | 1 | 2 | 3 | |
| | D | I | 1 | 2 | 3 | |
| | D | I | 1 | 2 | 3 | |
| | D | I | 1 | 2 | 3 | |
| | D | I | 1 | 2 | 3 | |
| | D | I | 1 | 2 | 3 | |

D - Decarbonizing
I - Inoperable
B - Base Sand Seal
Fx - Horizontal Flange
R - Riser Lid
G - Gooseneck
Fv - Vertical Flange
V - Valve Body
3 - Observed Leak

$$PLL = \frac{\#\text{Leaking Lids}}{\#\text{Lids Observed}} = \frac{0}{228 - \underset{\text{In-op}}{3} - \underset{\text{LNO}}{3}} = \frac{0}{222} = 0\% \text{ Lid Leaks}$$

$$PLO = \frac{\#\text{Leaking Offtakes}}{\#\text{Offtakes Observed}} = \frac{0}{152 - \underset{\text{In-op OFF}}{2} - \underset{\text{ONO}}{2}} = \frac{0}{148} = 0\% \text{ Leaking Offtakes}$$

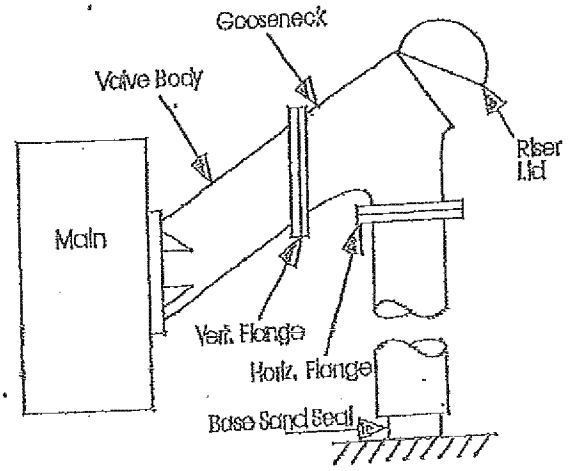


Total Lid Leaks: 0
Total Offtake Leaks: 0

# Door Inspection
## Environmental Quality Management, Inc.
## A.K Steel, Middletown Works

Battery: Wilpulle  Door Not Observed: _____  Co./EPA Personnel: _____

Date: 5/17/18  Inoperable Ovens: _____  Inspector: Charlie Foole

Shift: 7-3  Certification Expiration Date: N/A

Start Time 16:00 Hr:Min  End Time 17:03 Hr:Min

Start Time 11:06 Hr:Min  End Time 11:10 Hr:Min

**Pusher Side**

Actual T 3 m 00 s= ____ sec.

Allowable T=(304 sec)+(10 sec* ____ )= ____ sec

**Coke Side**

Actual T 3 m 40 s= ____ sec.

Allowable T=(304 sec)+(10 sec* ____ )= ____ sec

| Oven # | Doors | | | Comments |
|---|---|---|---|---|
| | D | C | PU | |
| | D | C | PU | |
| | D | C | PU | |
| | D | C | PU | |
| | D | C | PU | |
| | D | C | PU | |
| | D | C | PU | |
| | D | C | PU | |
| | D | C | PU | |
| | D | C | PU | |
| | D | C | PU | |
| | D | C | PU | |
| | D | C | PU | |
| | D | C | PU | |
| | D | C | PU | |
| | D | C | PU | |
| | D | C | PU | |
| | D | C | PU | |
| | D | C | PU | |
| | D | C | PU | |
| | D | C | PU | |
| | D | C | PU | |

| Oven # | Doors | | Comments |
|---|---|---|---|
| 28 | D | PU | |
| 38 | D | PU | |
| 46 | D | PU | |
| 50 | D | PU | |
| | D | PU | |
| | D | PU | |
| | D | PU | |
| | D | PU | |
| | D | PU | |
| | D | PU | |
| | D | PU | |
| | D | PU | |
| | D | PU | |
| | D | PU | |
| | D | PU | |
| | D | PU | |
| | D | PU | |
| | D | PU | |
| | D | PU | |
| | D | PU | |
| | D | PU | |

D - Door  PU - Point Up  C - Chuck

Total Leaks = 0 (PS) + 4 (CS) = 4

Doh = 152 - 2 (Inoperable Doors) - 0 (DNO) = 150

PLD = Door Leaks / Doh = 4 / 150 = 2.67% Door Leaks

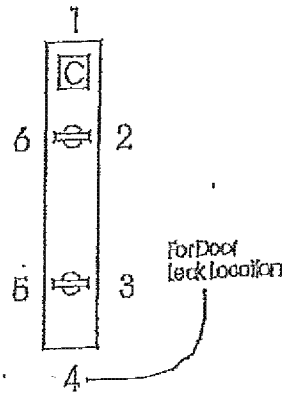

# A.K. Steel, Middletown Works

Battery: Wilputte

Co./BPA Personnel: [illegible]

Date: 5/14/18

Inspector: [illegible]

Shift: 7-3

Certification Expiration Date: N/A

| Source | Coke Side Leak Location | Push Side Leak Location | Comments |
|---|---|---|---|
| 1. Spoon Hole Covers | O/K | O/K | |
| 2. Valve Body Flange/Damper Flange | O/K | O/K | |
| 3. Crossovers (4)/Flare Stacks (4) | O/K | O/K | |
| 4. Liquor Piping/Intakes & Steam | O/K | O/K | |

Regulator Back Pressure:
B 7 mm/$H_2O$ with avg. swings of 6 _____ Last 8 hrs
W 6 mm/$H_2O$ with avg. swings of 6 _____ Last 8 hrs

Remarks:

Push Side

Coke Side

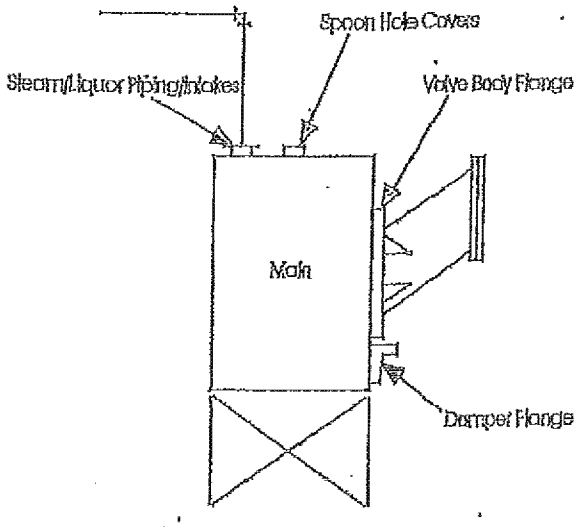


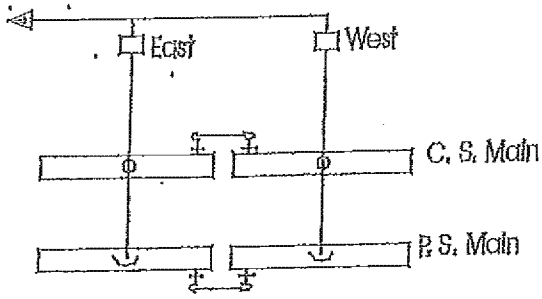

# DAILY REPORT
## ENVIRONMENTAL QUALITY MANAGEMENT, INC.
## A K STEEL, MIDDLETOWN WORKS

Date: 5/15/18

Location: Middletown C.P.

Inspector: Charlie Baker

| | Battery | # Leaking | Total | % Leaking | % Allowable EPA Standards |
|---|---|---|---|---|---|
| Doors | Wilputte | 3 | 150 | 200 | 3.3% |
| Lids | Wilputte | 0 | 222 | 0 | 0.4% |
| Standpipes | Wilputte | 0 | 148 | 0 | 2.5% |

| Observations (sec.) Wilputte |
|---|
| 3.0 |
| 6.5 |
| 5.0 |
| 7.0 |
| 6.0 |
| 27.5 |

Total: 5.5

Average: 12.0

Comments:

# Charging Inspection
## Environmental Quality Management, Inc.
## A K Steel, Middletown Works

Battery: Wilputte

Co./EPA Personnel: /

Date: 5/15/18.

Inspector: Chuck Keele

Shift: 7-3.

Certification Expiration Date: N/A

Start Time: 11:31 Hr:Min

Weather/Temp. Clear 87°

End Time: 12:37 Hr:Min

Larry Car #: EAST

| Charge Number | Oven # | Start Time | End Time | Visible Emission Seconds | Visible Emission (a) +1 Second | Ln Ve's (a) +1 Second | Comments |
|---|---|---|---|---|---|---|---|
| 1 | 44 | 11:31 | 11:36 | 3.0 | | | |
| 2 | 46 | 11:44 | 11:48 | 6.5 | | | |
| 3 | 48 | 12:03 | 12:08 | 5.0 | | | |
| 4 | 50 | 12:19 | 12:24 | 7.0 | | | |
| 5 | 52 | 12:32 | 12:37 | 6.0 | | | |
| | | | | | | | |
| | | | | | | | |
| | | | | | | | |
| | | | | | | | |
| | | | | | | | |
| | Total 5 Charges | | | 27.5 | | | +5=y= |
| | Average | | | 5.5 | | | $(e^y)-1=(\quad)-1=$ |

[a] - For use only when computer printout is not included

# Topside Inspection
## Environmental Quality Management, Inc.
## A K Steel, Middletown Works

Battery: Wilputte  Oven Not Observed: _____  _____ / Co./EPA Personnel

Date: 5/15/18  Inoperable Ovens: _____  Certification Expiration Date: N/A

Shift: 7-3  Inspector: Charlie Keele

| | | | | | | | | |
|---|---|---|---|---|---|---|---|---|
| Start Time | 11:19 | Hr:Min | Start Time | 11:22 | Hr:Min | Start Time | 11:25 | Hr:Min |
| End Time | 11:21 | Hr:Min | End Time | 11:24 | Hr:Min | End Time | 11:28 | Hr:Min |

**PS Off Pass**
Actual T 2 m 15 s = ____ sec.
Allowable T=(304 sec)+(10 sec* ____ )= ____ %

| Oven # | Push Side Offtakes | | | Comments |
|---|---|---|---|---|
| 44 | ~~D~~ | I | | |
| 20 | D | ~~I~~ | | |
| | D | I | | |
| | D | I | | |
| | D | I | | |
| | D | I | | |
| | D | I | | |
| | D | I | | |
| | D | I | | |
| | D | I | | |
| | D | I | | |
| | D | I | | |

**CS Off Pass**
Actual T 2 m 15 s = ____ sec
Allowable T=(304 sec)+(10 sec* ____ )= ____ %

| Oven # | Coke Side Offtakes | | | Comments |
|---|---|---|---|---|
| 44 | ~~D~~ | I | | |
| 20 | D | ~~I~~ | | |
| | D | I | | |
| | D | I | | |
| | D | I | | |
| | D | I | | |
| | D | I | | |
| | D | I | | |
| | D | I | | |
| | D | I | | |
| | D | I | | |
| | D | I | | |

**Charge Lid Pass**
Actual T 2 m 25 s = ____ sec
Allowable T=(304 sec)+(10 sec* ____ )= ____ %

| Oven # | Charge Lids | | | | | Comments |
|---|---|---|---|---|---|---|
| 44 | ~~D~~ | ~~I~~ | 1 | 2 | 3 | |
| 20 | D | ~~I~~ | 1 | 2 | 3 | |
| | D | I | 1 | 2 | 3 | |
| | D | I | 1 | 2 | 3 | |
| | D | I | 1 | 2 | 3 | |
| | D | I | 1 | 2 | 3 | |
| | D | I | 1 | 2 | 3 | |
| | D | I | 1 | 2 | 3 | |
| | D | I | 1 | 2 | 3 | |
| | D | I | 1 | 2 | 3 | |
| | D | I | 1 | 2 | 3 | |
| | D | I | 1 | 2 | 3 | |

D - Decarbonizing
I - Inoperable
B - Base Sand Seal
$F_H$ - Horizontal Flange
R - Riser Lid
G - Gooseneck
$F_V$ - Vertical Flange
V - Valve Body
3 - Observed Leak

$$PLL = \frac{\text{\# Leaking Lids}}{\text{\# Lids Observed}} = \frac{0}{228 - \underset{\text{In-op}}{3} - \underset{\text{LNO}}{3}} = \boxed{0\%} \text{ Lid Leaks} = 222$$

$$PLO = \frac{\text{\# Leaking Offtakes}}{\text{\# Offtakes Observed}} = \frac{0}{152 - \underset{\text{In-op OFF}}{2} - \underset{\text{ONO}}{2}} = \boxed{\ \%\ } \text{ Leaking Offtakes} = 148$$

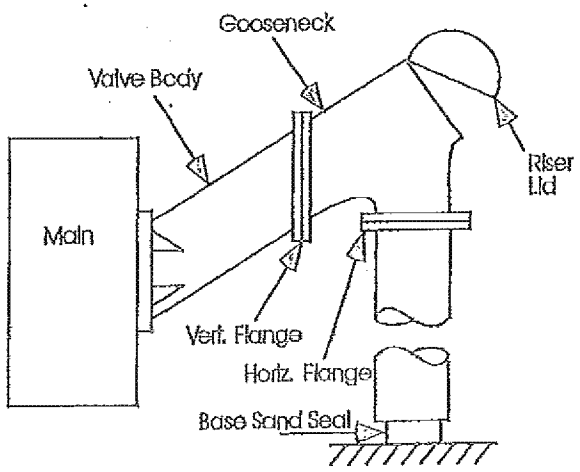


Total Lid Leaks: 0
Total Offtake Leaks: 0

# Door Inspection
## Environmental Quality Management, Inc.
## A K Steel, Middletown Works

Battery: Wilputte  Door Not Observed: _____  1 Co./EPA Personnel

Date: 5/15/18  Inoperable Ovens: _____  Inspector: [illegible]

Shift: 7-3  Certification Expiration Date: N/A

Start Time 10:57 Hr:Min  Start Time 11:09 Hr:Min
End Time 11:00 Hr:Min  End Time 11:09 Hr:Min

**Pusher Side**
Actual T 3 m 00 s = _____ sec.
Allowable T=(304 sec)+(10 sec* _____ )= _____ sec

**Coke Side**
Actual T 3 m 30 s = _____ sec.
Allowable T=(304 sec)+(10 sec* _____ )= _____ sec

| Oven # | Doors | | | Comments |
|---|---|---|---|---|
| | D | C | PU | |
| | D | C | PU | |
| | D | C | PU | |
| | D | C | PU | |
| | D | C | PU | |
| | D | C | PU | |
| | D | C | PU | |
| | D | C | PU | |
| | D | C | PU | |
| | D | C | PU | |
| | D | C | PU | |
| | D | C | PU | |
| | D | C | PU | |
| | D | C | PU | |
| | D | C | PU | |
| | D | C | PU | |
| | D | C | PU | |
| | D | C | PU | |
| | D | C | PU | |

| Oven # | Doors | | Comments |
|---|---|---|---|
| 10 | D | ~~PU~~ | |
| 22 | D | ~~PU~~ | |
| 30 | D | ~~PU~~ | |
| | D | PU | |
| | D | PU | |
| | D | PU | |
| | D | PU | |
| | D | PU | |
| | D | PU | |
| | D | PU | |
| | D | PU | |
| | D | PU | |
| | D | PU | |
| | D | PU | |
| | D | PU | |
| | D | PU | |
| | D | PU | |
| | D | PU | |
| | D | PU | |

D - Door  PU - Point Up  C - Chuck

Total Leaks = $\frac{0}{PS} + \frac{3}{CS} = 3$

Dob = 152 - $\frac{2}{\text{Inoperable Doors}} - \frac{0}{DNO} = 150$

PLD = $\frac{\text{Door Leaks}}{\text{Dob}} = \frac{3}{150} = \boxed{2.00\ \%}$ Door Leaks

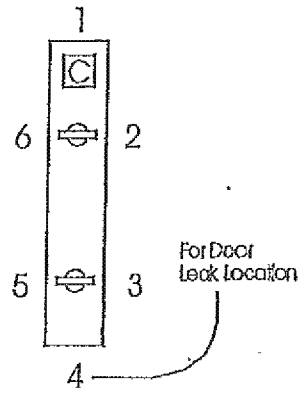

# Collector Main
## Environmental Quality Management, Inc.
## A.K Steel, Middletown Works

Battery: Wilpitte

Co./EPA Personnel: /

Date: 5/15/18

Inspector: [illegible]

Shift: 7-3

Certification Expiration Date: N/A

| Source | Coke Side Leak Location | Push Side Leak Location | Comments |
|---|---|---|---|
| 1. Spoon Hole Covers | OK | OK | |
| 2. Valve Body Flange/Damper Flange | OK | OK | |
| 3. Crossovers (4)/Flare Stacks (4) | OK | OK | |
| 4. Liquor Piping/Intakes & Steam | OK | OK | |

Regulator Back Pressure:
E 6 mm/$H_2O$ with avg. swings of 6 _____ Last 8 hrs
W 6 mm/$H_2O$ with avg. swings of 6 _____ Last 8 hrs

Remarks:

Push Side

Coke Side

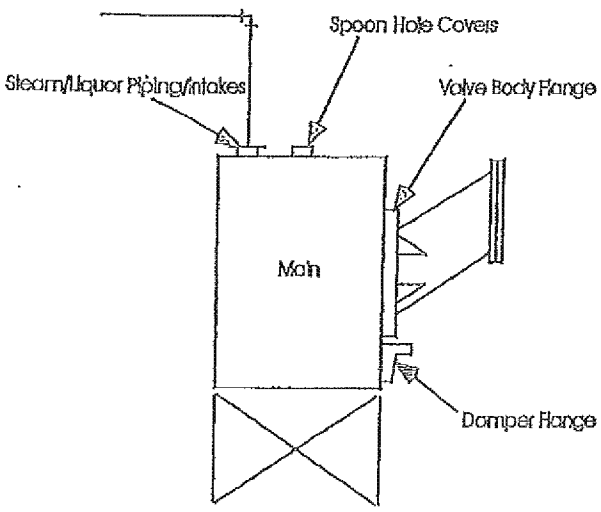


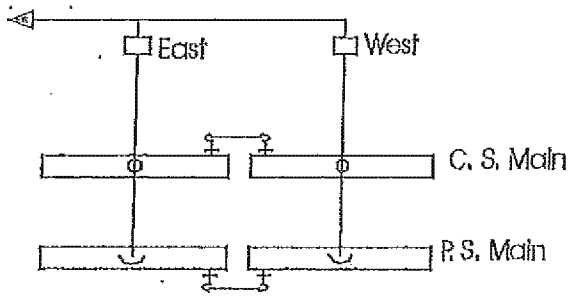

# DAILY REPORT
## ENVIRONMENTAL QUALITY MANAGEMENT, INC.
## A K STEEL, MIDDLETOWN WORKS

Date: 5-14-18

Location: Middletown C.P.

Inspector: Kenny Miles

| | Battery | # Leaking | Total | % Leaking | % Allowable EPA Standards |
|---|---|---|---|---|---|
| Doors | Wilputte | 4 | 150 | 2.67 | 3.3% |
| Lids | Wilputte | 0 | 222 | 0 | 0.4% |
| Standpipes | Wilputte | 0 | 198 | 0 | 2.5% |

| Observations (sec.) Wilputte |
|---|
| 7.0 |
| 15.0 |
| 5.5 |
| 10.5 |
| 12.0 |
| 50.0 |

Total: 10.0

Average: 12.0

Comments:

# Charging Inspection
## Environmental Quality Management, Inc.
## A K Steel, Middletown Works

Battery: Wilputte

Co./BPA Personnel: /

Date: 5-16-18

Inspector: [illegible]

Shift: 7-3

Certification Expiration Date: N/A

Start Time: 12:37 Hr:Min

End Time: 1:30 Hr:Min

Larry Car #: EAST

Weather/Temp. Cloudy 74°

| Charge Number | Oven # | Start Time | End Time | Visible Emission Seconds | Visible Emission (a) +1 Second | Ln Ve's (a) +1 Second | Comments |
|---|---|---|---|---|---|---|---|
| 1 | 14 | 12:37 | 12:42 | 7.0 | | | |
| 2 | 16 | 12:49 | 12:54 | 15.0 | | | |
| 3 | 18 | 1:01 | 1:06 | 5.5 | | | |
| 4 | 22 | 1:11 | 1:16 | 10.5 | | | |
| 5 | 24 | 1:25 | 1:30 | 12.0 | | | |
| | | | | | | | |
| | | | | | | | |
| | | | | | | | |
| | | | | | | | |
| | | | | | | | |
| | Total 5 Charges | | | 50.0 | | | +5=y= |
| | Average | | | 10.0 | | | $(e^y)-1=(\quad)-1=$ |

[2] - For use only when computer printout is not included

# Topside Inspection
## Environmental Quality Management, Inc.
## A K Steel, Middletown Works

Battery: Wilputte  Oven Not Observed: _____  Co./EPA Personnel: /

Date: 5-14-18  Inoperable Ovens: _____  Certification Expiration Date: N/A

Shift: 7-3  Inspector: [illegible]

Start Time 11 : 05 Hr:Min  Start Time 11 : 08 Hr:Min  Start Time 11 : 11 Hr:Min
End Time 11 : 07 Hr:Min  End Time 11 : 10 Hr:Min  End Time 11 : 13 Hr:Min

PS Off Pass: Actual T 2 m 10 s = ____ sec.  Allowable T=(304 sec)+(10 sec* ____ )= ____ %

CS Off Pass: Actual T 2 m 08 s = ____ Sec  Allowable T=(304 sec)+(10 sec* ____ )= ____ %

Charge Lid Pass: Actual T 2 m 05 s = ____ sec  Allowable T=(304 sec)+(10 sec* ____ )= ____ %

| Oven # | Push Side Offtakes | | Comments |
|---|---|---|---|
| 14 | B | I | |
| 20 | D | X | |
| | D | I | |
| | D | I | |
| | D | I | |
| | D | I | |
| | D | I | |
| | D | I | |
| | D | I | |
| | D | I | |
| | D | I | |
| | D | I | |
| | D | I | |

| Oven # | Coke Side Offtakes | | Comments |
|---|---|---|---|
| 14 | B | I | |
| 20 | D | X | |
| | D | I | |
| | D | I | |
| | D | I | |
| | D | I | |
| | D | I | |
| | D | I | |
| | D | I | |
| | D | I | |
| | D | I | |
| | D | I | |
| | D | I | |

| Oven # | Charge Lids | | | | | Comments |
|---|---|---|---|---|---|---|
| 14 | D | I | 1 | 2 | 3 | |
| 20 | D | X | 1 | 2 | 3 | |
| | D | I | 1 | 2 | 3 | |
| | D | I | 1 | 2 | 3 | |
| | D | I | 1 | 2 | 3 | |
| | D | I | 1 | 2 | 3 | |
| | D | I | 1 | 2 | 3 | |
| | D | I | 1 | 2 | 3 | |
| | D | I | 1 | 2 | 3 | |
| | D | I | 1 | 2 | 3 | |
| | D | I | 1 | 2 | 3 | |
| | D | I | 1 | 2 | 3 | |
| | D | I | 1 | 2 | 3 | |

D - Decarbonizing
I - Inoperable
B - Base Sand Seal
$P_H$ - Horizontal Flange
R - Riser Lid
G - Gooseneck
$P_V$ - Vertical Flange
V - Valve Body
3 - Observed Leak

$$PLL = \frac{\text{\# Leaking Lids}}{\text{\# Lids Observed}} = \frac{0}{228 - \underset{\text{In-op}}{3} - \underset{\text{LNO}}{3}} = \frac{0}{222} = \boxed{\ \%\ } \text{ Lid Leaks}$$

$$PLO = \frac{\text{\# Leaking Offtakes}}{\text{\# Offtakes Observed}} = \frac{0}{152 - \underset{\text{In-op OFF}}{2} - \underset{\text{ONO}}{2}} = \frac{0}{148} = \boxed{\ \%\ } \text{ Leaking Offtakes}$$

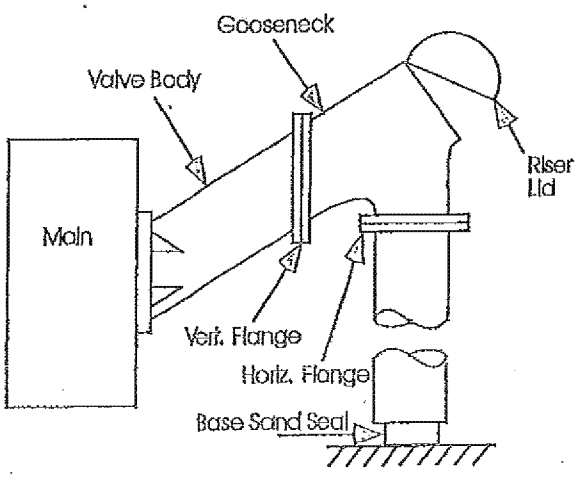


Total Lid Leaks: 0
Total Offtake Leaks: 0

# Door Inspection
## Environmental Quality Management, Inc.
## A K Steel, Middletown Works

Battery: Wilputte  Door Not Observed: _____  1 Co./EPA Personnel

Date: 5-16-18  Inoperable Ovens: _____  Inspector: [illegible]

Shift: 7-3  Certification Expiration Date: N/A

Start Time 10 : 45 Hr:Min  Start Time 10 : 51 Hr:Min
End Time 10 : 48 Hr:Min  End Time 10 : 54 Hr:Min

**Pusher Side**
Actual T 3 m 65 s = _____ sec.
Allowable T=(304 sec)+(10 sec* _____ )= _____ sec

**Coke Side**
Actual T 3 m 15 s = _____ sec.
Allowable T=(304 sec)+(10 sec* _____ )= _____ sec

| Oven # | Doors | | | Comments |
|---|---|---|---|---|
| | D | C | PU | |
| | D | C | PU | |
| | D | C | PU | |
| | D | C | PU | |
| | D | C | PU | |
| | D | C | PU | |
| | D | C | PU | |
| | D | C | PU | |
| | D | C | PU | |
| | D | C | PU | |
| | D | C | PU | |
| | D | C | PU | |
| | D | C | PU | |
| | D | C | PU | |
| | D | C | PU | |
| | D | C | PU | |
| | D | C | PU | |
| | D | C | PU | |
| | D | C | PU | |

| Oven # | Doors | | Comments |
|---|---|---|---|
| 29 | D | PU | |
| 33 | D | PU | |
| 50 | D | PU | |
| 51 | D | PU | |
| | D | PU | |
| | D | PU | |
| | D | PU | |
| | D | PU | |
| | D | PU | |
| | D | PU | |
| | D | PU | |
| | D | PU | |
| | D | PU | |
| | D | PU | |
| | D | PU | |
| | D | PU | |
| | D | PU | |
| | D | PU | |
| | D | PU | |

D - Door  PU - Point Up  C - Chuck

Total Leaks = 0 (PS) + 4 (CS) = 4

Dob = 152 - 2 (Inoperable Doors) - 0 (DNO) = 150

PLD = Door Leaks / Dob = 4 / 150 = 2.67 % Door Leaks

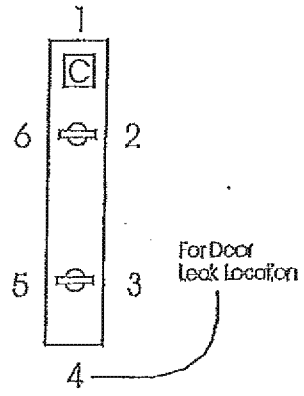

# Collector Main
## Environmental Quality Management, Inc.
## A.K. Steel, Middletown Works

Battery: Wilputte

Co./EPA Personnel

Date: 5-16-18

Inspector: Kenny [illegible]

Shift: 7-3

Certification Expiration Date: N/A

| Source | Coke Side Leak Location | Push Side Leak Location | Comments |
|---|---|---|---|
| 1. Spoon Hole Covers | OK | OK | |
| | | | |
| | | | |
| 2. Valve Body Flange/Damper Flange | OK | OK | |
| | | | |
| | | | |
| 3. Crossovers (4)/Flare Stacks (4) | OK | OK | |
| 4. Liquor Piping/Intakes & Steam | OK. | OK | |

Regulator Back Pressure:
E 6 mm/$H_2O$ with avg. swings of 6 _____ Last 8 hrs
W 6 mm/$H_2O$ with avg. swings of 6 _____ Last 8 hrs

Remarks: Push Side | Coke Side

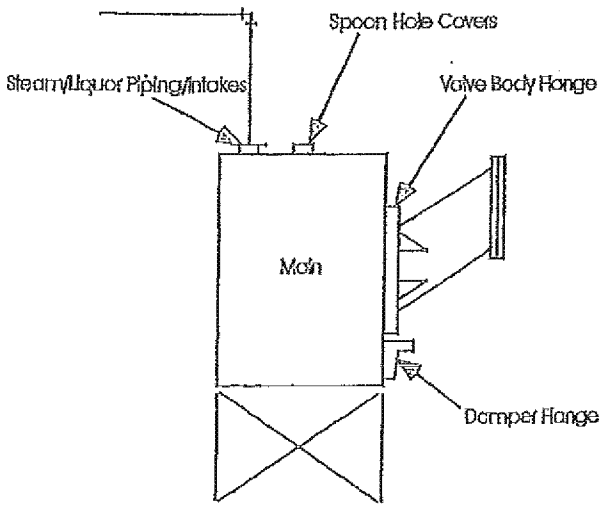


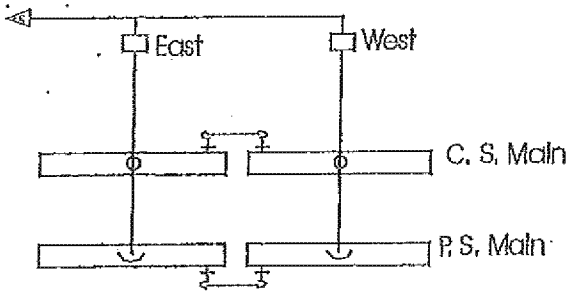

# DAILY REPORT
## ENVIRONMENTAL QUALITY MANAGEMENT, INC.
## A K STEEL, MIDDLETOWN WORKS

Date: 5-17-18

Location: Middletown C.P.

Inspector: [illegible]

| | Battery | # Leaking | Total | % Leaking | % Allowable EPA Standards |
|---|---|---|---|---|---|
| Doors | Wilputte | 7 | 150 | 4.79 | 3.3% |
| Lids | Wilputte | 0 | 222 | | 0.4% |
| Standpipes | Wilputte | 6 | 148 | | 2.5% |

| Observations (sec.) Wilputte |
|---|
| 16.0 |
| 9.0 |
| 13.5 |
| 12.0 |
| 8.5 |
| 59.0 |

Total: 11.8

Average: 12.0

Comments:

# Charging Inspection
## Environmental Quality Management, Inc.
## A K Steel, Middletown Works

Battery: Wilputte

Co./EPA Personnel

Date: 5-17-18

Inspector: [illegible]

Shift: 7-3

Certification Expiration Date: N/A

Start Time: 11:30 AM Hr:Min

Weather/Temp. M. Sunny 76°

End Time: 5:43 PM Hr:Min

Larry Car #: EAST

| Charge Number | Oven # | Start Time | End Time | Visible Emission Seconds | Visible Emission (a) +1 Second | Ln Ve's (a) +1 Second | Comments |
|---|---|---|---|---|---|---|---|
| 1 | 65 | 11:30 | 11:36 | 16.0 | | | |
| 2 | 67 | 11:41 | 11:47 | 9.0 | | | |
| 3 | 69 | 5:07 | 5:12 | 13.5 | | | |
| 4 | 71 | 5:25 | 5:30 | 12.0 | | | |
| 5 | 77 | 5:38 | 5:43 | 8.5 | | | |
| | | | | | | | |
| | | | | | | | |
| | | | | | | | |
| | | | | | | | |
| | | | | | | | |
| | Total 5 Charges | | | 59.0 | | | ÷5=y= |
| | Average | | | 11.8 | | | $(e^y)$-1=( )-1= |

[a] - For use only when computer printout is not included

# Topside Inspection
## Environmental Quality Management, Inc.
## A K Steel, Middletown Works

Battery: Wilputte  Oven Not Observed: _____ / _____ Co./BPA Personnel

Date: 5-17-18  Inoperable Ovens: _____  Certification Expiration Date: N/A

Shift: 7-3  Inspector: Kenneth E. Mills

Start Time 11 : 07 Hr:Min  Start Time 11 : 10 Hr:Min  Start Time 11 : 13 Hr:Min
End Time 11 : 09 Hr:Min  End Time 11 : 12 Hr:Min  End Time 11 : 15 Hr:Min

**PS Off Pass**
Actual T 2 m 05 s = ____ sec.
Allowable T=(304 sec)+(10 sec* ____ )= ____ %

**CS Off Pass**
Actual T 2 m 08 s = ____ Sec
Allowable T=(304 sec)+(10 sec* ____ )= ____ %

**Charge Lid Pass**
Actual T 2 m 10 s = ____ sec
Allowable T=(304 sec)+(10 sec* ____ )= ____ %

| Oven # | Push Side Offtakes | | | Comments |
|---|---|---|---|---|
| 65 | ~~D~~ | I | | |
| 20 | D | ~~I~~ | | |
| 34 | D | ~~I~~ | | |
| 76 | D | ~~I~~ | | |
| | D | I | | |
| | D | I | | |
| | D | I | | |
| | D | I | | |
| | D | I | | |
| | D | I | | |
| | D | I | | |
| | D | I | | |

| Oven # | Coke Side Offtakes | | | Comments |
|---|---|---|---|---|
| 65 | ~~D~~ | I | | |
| 20 | D | ~~I~~ | | |
| 34 | D | ~~I~~ | | |
| 76 | D | ~~I~~ | | |
| | D | I | | |
| | D | I | | |
| | D | I | | |
| | D | I | | |
| | D | I | | |
| | D | I | | |
| | D | I | | |
| | D | I | | |

| Oven # | Charge Lids | | | | | Comments |
|---|---|---|---|---|---|---|
| 65 | ~~D~~ | I | 1 | 2 | 3 | |
| 20 | D | ~~I~~ | 1 | 2 | 3 | |
| 34 | D | ~~I~~ | 1 | 2 | 3 | |
| 76 | D | ~~I~~ | 1 | 2 | 3 | |
| | D | I | 1 | 2 | 3 | |
| | D | I | 1 | 2 | 3 | |
| | D | I | 1 | 2 | 3 | |
| | D | I | 1 | 2 | 3 | |
| | D | I | 1 | 2 | 3 | |
| | D | I | 1 | 2 | 3 | |
| | D | I | 1 | 2 | 3 | |
| | D | I | 1 | 2 | 3 | |

D - Decarbonizing
I - Inoperable
B - Base Sand Seal
$F_R$ - Horizontal Flange
R - Riser Lid
G - Gooseneck
$F_V$ - Vertical Flange
V - Valve Body
3 - Observed Leak

$$PLL = \frac{\text{\# Leaking Lids}}{\text{\# Lids Observed}} = \frac{0}{228 - \underset{\text{In-op}}{12} - \underset{\text{LNO}}{12}} = \frac{0}{222} = \boxed{0\ \%}$$ Lid Leaks

$$PLO = \frac{\text{\# Leaking Offtakes}}{\text{\# Offtakes Observed}} = \frac{0}{152 - \underset{\text{In-op OFF}}{2} - \underset{\text{ONO}}{2}} = \frac{0}{148} = \boxed{0\ \%}$$ Leaking Offtakes

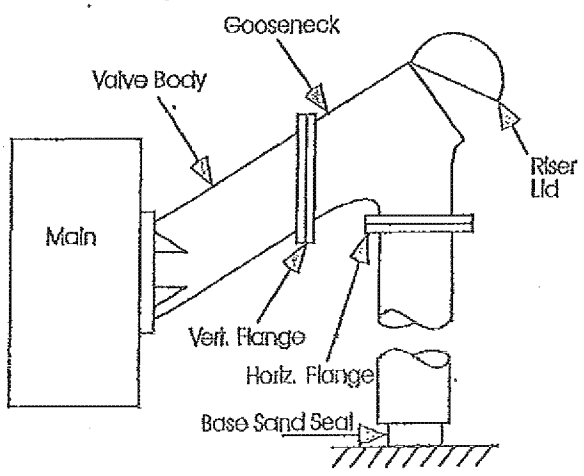


Total Lid Leaks: 0
Total Offtake Leaks: 0

# Door Inspection
## Environmental Quality Management, Inc.
## A.K Steel, Middletown Works

Battery: Wilputte  Door Not Observed: _____  Co./EPA Personnel: 1

Date: 5-07-18  Inoperable Ovens: _____  Inspector: Kenny Mc

Shift: _____  Certification Expiration Date: N/A

Start Time 10 : 52 Hr:Min  Start Time 10 : 57 Hr:Min
End Time 10 : 55 Hr:Min  End Time 11 : 00 Hr:Min

**Pusher Side**
Actual T 3 m 07 s = _____ sec.
Allowable T=(304 sec)+(10 sec* _____ ) = _____ sec

**Coke Side**
Actual T 3 m 20 s = _____ sec.
Allowable T=(304 sec)+(10 sec* _____ ) = _____ sec

| Oven # | Doors | | | Comments |
|---|---|---|---|---|
| | D | C | PU | |
| | D | C | PU | |
| | D | C | PU | |
| | D | C | PU | |
| | D | C | PU | |
| | D | C | PU | |
| | D | C | PU | |
| | D | C | PU | |
| | D | C | PU | |
| | D | C | PU | |
| | D | C | PU | |
| | D | C | PU | |
| | D | C | PU | |
| | D | C | PU | |
| | D | C | PU | |
| | D | C | PU | |
| | D | C | PU | |
| | D | C | PU | |
| | D | C | PU | |

| Oven # | Doors | | Comments |
|---|---|---|---|
| 22 | D | PU | |
| 33 | D | PU | |
| 39 | D | PU | |
| 47 | D | PU | |
| 49 | D | PU | |
| 50 | D | PU | |
| 52 | D | PU | |
| | D | PU | |
| | D | PU | |
| | D | PU | |
| | D | PU | |
| | D | PU | |
| | D | PU | |
| | D | PU | |
| | D | PU | |
| | D | PU | |
| | D | PU | |
| | D | PU | |
| | D | PU | |

D - Door  PU - Point Up  C - Chuck

Total Leaks = 0 (PS) + 7 (CS) = 7

Dob = 152 - 6 (Inoperable Doors) - 0 (DNO) = 150

PLD = Door Leaks / Dob = 7 / 150 = 4.79 % Door Leaks

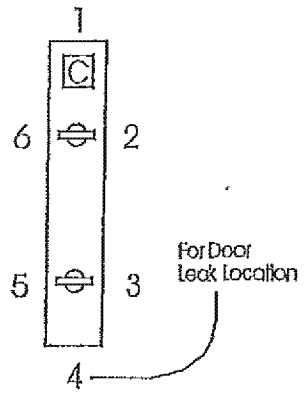

# Collector Main
## Environmental Quality Management, Inc.
## A.K Steel, Middletown Works

Battery: Wilputte

Co./EPA Personnel: /

Date: 5-17-18

Inspector: [illegible]

Shift:

Certification Expiration Date: N/A

| Source | Coke Side Leak Location | Push Side Leak Location | Comments |
|---|---|---|---|
| 1. Spoon Hole Covers | OK | OK | |
| 2. Valve Body Flange/Damper Flange | OK | OK | |
| 3. Crossovers (4)/Flare Stacks (4) | OK | OK | |
| 4. Liquor Piping/Intakes & Steam | OK | OK | |

Regulator Back Pressure:
E 6 mm/$H_2O$ with avg. swings of 7 Last 8 hrs
W 6 mm/$H_2O$ with avg. swings of 6 Last 8 hrs

Remarks: Push Side | Coke Side

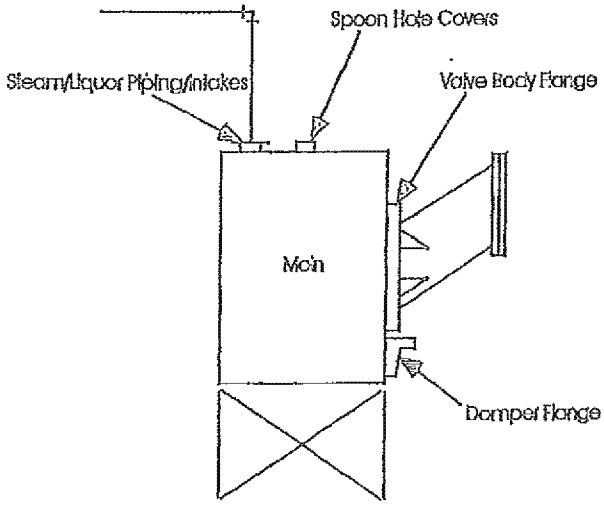


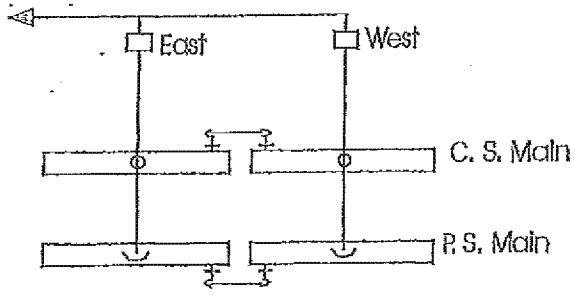

# DAILY REPORT
## ENVIRONMENTAL QUALITY MANAGEMENT, INC.
## A K STEEL, MIDDLETOWN WORKS

Date: 5/18/18

Location: Middletown C.P.

Inspector: Charle Koller

| | Battery | # Leaking | Total | % Leaking | % Allowable EPA Standards |
|---|---|---|---|---|---|
| Doors | Wilputte | 5 | 148 | 3.38 | 3.3% |
| Lids | Wilputte | 0 | 213 | 0 | 0.4% |
| Standpipes | Wilputte | 1 | 142 | .72 | 2.5% |

| Observations (sec.) Wilputte |
|---|
| 5.5 |
| 7.0 |
| 8.5 |
| 4.0 |
| 16.0 |
| 41.0 |

Total: 8.2

Average: 12.0

Comments:

# Charging Inspection
## Environmental Quality Management, Inc.
## AK Steel, Middletown Works

Battery: Wilputte

Date: 5/18/18

Shift: 7-3

Start Time: 3:55 Hr:Min

End Time: 6:10 Hr:Min

Larry Car #: EAST

/
Co./BPA Personnel

Inspector: [illegible]

Certification Expiration Date: N/A

Weather/Temp. Clear 80°

| Charge Number | Oven # | Start Time | End Time | Visible Emission Seconds | Visible Emission (a) +1 Second | Ln Vo's (a) +1 Second | Comments |
|---|---|---|---|---|---|---|---|
| 1 | 63 | 3:55 | 4:00 | 5.5 | | | |
| 2 | 65 | 4:10 | 4:15 | 7.0 | | | |
| 3 | 67 | 4:20 | 4:25 | 8.5 | | | |
| 4 | 69 | 5:55 | 6:00 | 4.0 | | | |
| 5 | 71 | 6:05 | 6:10 | 16.0 | | | |
| | | | | | | | |
| | | | | | | | |
| | | | | | | | |
| | | | | | | | |
| | | | | | | | |
| | Total 5 Charges | | | 41.0 | | | ÷5=y= |
| | Average | | | 8.2 | | | $(e^y)-1=(\quad)-1=$ |

[a] - For use only when computer printout is not included

# Topside Inspection
## Environmental Quality Management, Inc.
## A K Steel, Middletown Works

Battery: Wilputte  Oven Not Observed: _____  1 Co./EPA Personnel

Date: 5/18/18  Inoperable Ovens: _____  Certification Expiration Date: N/A

Shift: 7-3  Inspector: Charles Kelle

| | | | | | | | | |
|---|---|---|---|---|---|---|---|---|
| Start Time | 3:33 | Hr:Min | Start Time | 3:36 | Hr:Min | Start Time | 3:39 | Hr:Min |
| End Time | 3:35 | Hr:Min | End Time | 3:38 | Hr:Min | End Time | 3:42 | Hr:Min |

**PS Off Pass**
Actual T 2 m 20 s= ____ sec.
Allowable T=(304 sec)+(10 sec* ____ )= ____ %

**CS Off Pass**
Actual T 2 m 20 s= ____ Sec
Allowable T=(304 sec)+(10 sec* ____ )= ____ %

**Charge Lid Pass**
Actual T 2 m 25 s= ____ sec
Allowable T=(304 sec)+(10 sec* ____ )= ____ %

| Oven # | Push Side Offtakes | | | Comments |
|---|---|---|---|---|
| 63 | D | I | | |
| 65 | D | I | | |
| 67 | D | I | | |
| 20 | D | I | | |
| 34 | D | I | | |
| | D | I | | |
| | D | I | | |
| | D | I | | |
| | D | I | | |
| | D | I | | |
| | D | I | | |
| | D | I | | |

| Oven # | Coke Side Offtakes | | | Comments |
|---|---|---|---|---|
| 63 | D | I | | |
| 65 | D | I | | |
| 67 | D | I | | |
| 20 | D | I | | |
| 34 | D | I | | |
| | D | I | | |
| | D | I | | |
| | D | I | | |
| | D | I | | |
| | D | I | | |
| | D | I | | |
| | D | I | | |

| Oven # | Charge Lids | | | | | Comments |
|---|---|---|---|---|---|---|
| 63 | D | I | 1 | 2 | 3 | |
| 65 | D | I | 1 | 2 | 3 | |
| 67 | D | I | 1 | 2 | 3 | |
| 20 | D | I | 1 | 2 | 3 | |
| 34 | D | I | 1 | 2 | 3 | |
| | D | I | 1 | 2 | 3 | |
| | D | I | 1 | 2 | 3 | |
| | D | I | 1 | 2 | 3 | |
| | D | I | 1 | 2 | 3 | |
| | D | I | 1 | 2 | 3 | |
| | D | I | 1 | 2 | 3 | |
| | D | I | 1 | 2 | 3 | |

D - Decarbonizing
I - Inoperable
B - Base Sand Seal
$F_H$ - Horizontal Flange
R - Riser Lid
G - Gooseneck
$F_V$ - Vertical Flange
V - Valve Body
3 - Observed Leak

$$PLL = \frac{\text{\# Leaking Lids}}{\text{\# Lids Observed}} = \frac{0}{228 - \underset{\text{In-op}}{6} - \underset{\text{LNO}}{9}} = \boxed{0\%} \text{ Lid Leaks} = 213$$

$$PLO = \frac{\text{\# Leaking Offtakes}}{\text{\# Offtakes Observed}} = \frac{1}{152 - \underset{\text{In-op OFF}}{4} - \underset{\text{ONO}}{6}} = \boxed{.72\%} \text{ Leaking Offtakes} = 142$$

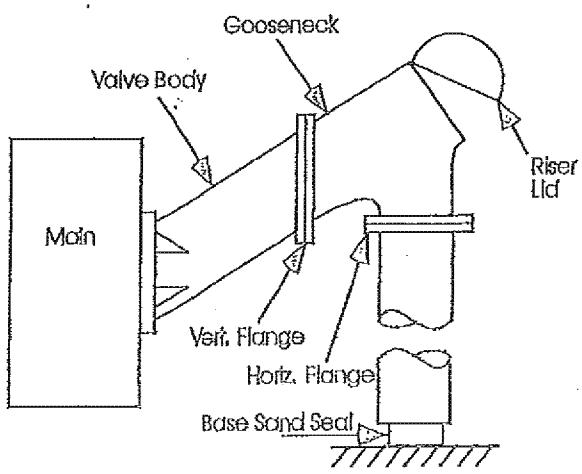


Total Lid Leaks: 0
Total Offtake Leaks: 1

# Door Inspection
## Environmental Quality Management, Inc.
## A.K Steel, Middletown Works

Battery: Wilputte  Door Not Observed: _____  Co./EPA Personnel: _____

Date: 5/18/18  Inoperable Ovens: _____  Inspector: Charles Kale

Shift: 7-3  Certification Expiration Date: N/A

Start Time: 5:24 Hr:Min  Start Time: 5:31 Hr:Min
End Time: 5:27 Hr:Min  End Time: 5:35 Hr:Min

**Pusher Side**
Actual T: 3 m 00 s = _____ sec.
Allowable T=(304 sec)+(10 sec* _____ ) = _____ sec

**Coke Side**
Actual T: 3 m 50 s = _____ sec.
Allowable T=(304 sec)+(10 sec* _____ ) = _____ sec

| Oven # | Doors | | | Comments |
|---|---|---|---|---|
| | D | C | PU | |
| | D | C | PU | |
| | D | C | PU | |
| | D | C | PU | |
| | D | C | PU | |
| | D | C | PU | |
| | D | C | PU | |
| | D | C | PU | |
| | D | C | PU | |
| | D | C | PU | |
| | D | C | PU | |
| | D | C | PU | |
| | D | C | PU | |
| | D | C | PU | |
| | D | C | PU | |
| | D | C | PU | |
| | D | C | PU | |
| | D | C | PU | |
| | D | C | PU | |
| | D | C | PU | |

| Oven # | Doors | | Comments |
|---|---|---|---|
| 29 | D | PU | |
| 39 | D | PU | |
| 42 | D | PU | |
| 52 | D | PU | |
| 46 | D | PU | |
| | D | PU | |
| | D | PU | |
| | D | PU | |
| | D | PU | |
| | D | PU | |
| | D | PU | |
| | D | PU | |
| | D | PU | |
| | D | PU | |
| | D | PU | |
| | D | PU | |
| | D | PU | |
| | D | PU | |
| | D | PU | |

D - Door  PU - Point Up  C - Chuck

Total Leaks = 0 (PS) + 5 (CS) = 5

Dob = 152 - 4 (Inoperable Doors) - 0 (DNO) = 148

PLD = Door Leaks / Dob = 5 / 148 = 3.38 % Door Leaks

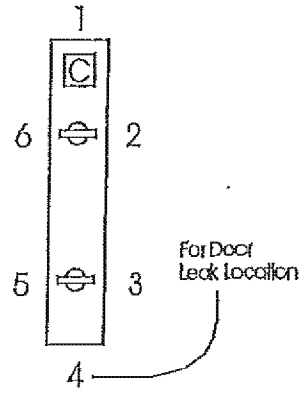

# Collector Main
## Environmental Quality Management, Inc.
## A.K Steel, Middletown Works

Battery: Wilputte

Co./EPA Personnel: /

Date: 5/18/18

Inspector: [illegible]

Shift: 7-3

Certification Expiration Date: N/A

| Source | Coke Side Leak Location | Push Side Leak Location | Comments |
|---|---|---|---|
| 1. Spoon Hole Covers | O/C | O/C | |
| | | | |
| | | | |
| 2. Valve Body Flange/Damper Flange | O/C | O/C | |
| | | | |
| | | | |
| 3. Crossovers (4)/Flare Stacks (4) | O/C | O/C | |
| 4. Liquor Piping/Intakes & Steam | O/C | O/C | |

Regulator Back Pressure:
E 6 mm/$H_2O$ with avg. swings of 6 _____ Last 8 hrs
W 6 mm/$H_2O$ with avg. swings of 6 _____ Last 8 hrs

Remarks:

| Push Side | Coke Side |
|---|---|
| | |
| | |
| | |
| | |
| | |

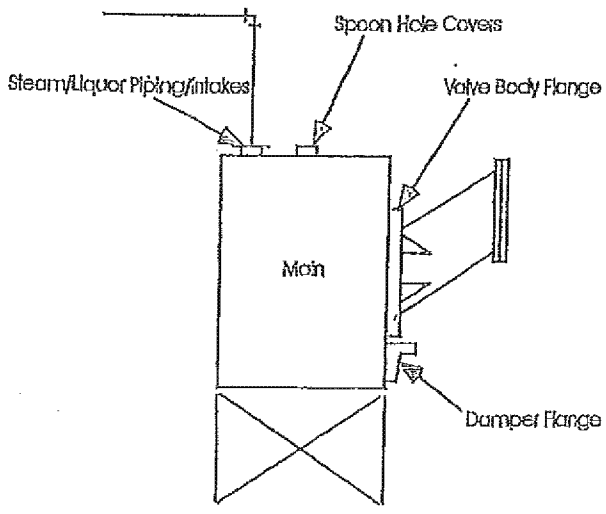


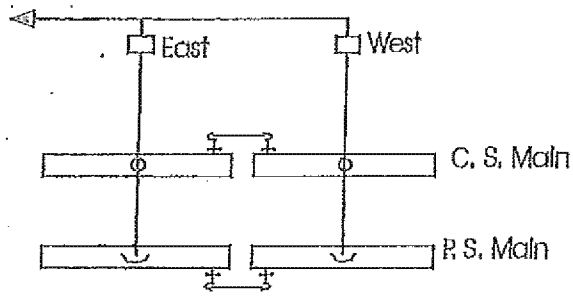

# DAILY REPORT
## ENVIRONMENTAL QUALITY MANAGEMENT, INC.
## A K STEEL, MIDDLETOWN WORKS

Date: 5/19/18

Location: Middletown C.P.

Inspector: Charles Koeller

| | Battery | # Leaking | Total | % Leaking | % Allowable EPA Standards |
|---|---|---|---|---|---|
| Doors | Wilputte | 7 | 148 | 4.73 | 3.3% |
| Lids | Wilputte | 0 | 219 | 0 | 0.4% |
| Standpipes | Wilputte | 0 | 146 | 0 | 2.5% |

Observations (sec.)
Wilputte

6.5
19.0
15.0
8.0
5.5

54.5

Total: 10.9

Average: 12.0

Comments:

# Charging Inspection
## Environmental Quality Management, Inc.
## A K Steel, Middletown Works

Battery: Wilputte

Date: 5/19/18

Shift: 7-3

Start Time: 11:34 Hr:Min

End Time: 12:30 Hr:Min

Larry Car #: E7151

/
Co./EPA Personnel

Inspector: Charles Keller

Certification Expiration Date: N/A

Weather/Temp. CLDY 73°

| Charge Number | Oven # | Start Time | End Time | Visible Emission Seconds | Visible Emission (a) +1 Second | Ln Ve's (a) +1 Second | Comments |
|---|---|---|---|---|---|---|---|
| 1 | 5 | 11:34 | 11:39 | 6.5 | | | |
| 2 | 7 | 11:46 | 11:52 | 19.0 | | | |
| 3 | 9 | 12:00 | 12:05 | 15.5 | | | |
| 4 | 11 | 12:14 | 12:20 | 8.0 | | | |
| 5 | 13 | 12:21 | 12:30 | 5.5 | | | |
| | | | | | | | |
| | | | | | | | |
| | | | | | | | |
| | | | | | | | |
| | | | | | | | |
| | Total 5 Charges | | | 54.5 | | | ÷5=y= |
| | Average | | | 10.9 | | | $(e^y)-1=(\quad)-1=$ |

[a] - For use only when computer printout is not included

# Topside Inspection
## Environmental Quality Management, Inc.
## A K Steel, Middletown Works

Battery: Wilputte  Oven Not Observed: _____  Co./EPA Personnel: _____

Date: 5/19/18  Inoperable Ovens: _____  Certification Expiration Date: N/A

Shift: 7-3  Inspector: [illegible]

| | | | | | |
|---|---|---|---|---|---|
| Start Time | 11:22 Hr:Min | Start Time | 11:28 Hr:Min | Start Time | 11:28 Hr:Min |
| End Time | 11:24 Hr:Min | End Time | 11:27 Hr:Min | End Time | 11:31 Hr:Min |

| PS Off Pass | CS Off Pass | Charge Lid Pass |
|---|---|---|
| Actual T 2 m 15 s = ____ sec. | Actual T 2 m 25 s = ____ Sec | Actual T 2 m 20 s = ____ sec |
| Allowable T=(304 sec)+(10 sec* ____ )= ____ % | Allowable T=(304 sec)+(10 sec* ____ )= ____ % | Allowable T=(304 sec)+(10 sec* ____ )= ____ % |

| Oven # | Push Side Offtakes | | Comments |
|---|---|---|---|
| 5 | ~~D~~ | I | |
| 34 | D | ~~I~~ | |
| 38 | D | ~~I~~ | |
| | D | I | |
| | D | I | |
| | D | I | |
| | D | I | |
| | D | I | |
| | D | I | |
| | D | I | |
| | D | I | |
| | D | I | |
| | D | I | |

| Oven # | Coke Side Offtakes | | Comments |
|---|---|---|---|
| 5 | ~~D~~ | I | |
| 34 | D | ~~I~~ | |
| 38 | D | ~~I~~ | |
| | D | I | |
| | D | I | |
| | D | I | |
| | D | I | |
| | D | I | |
| | D | I | |
| | D | I | |
| | D | I | |
| | D | I | |
| | D | I | |

| Oven # | Charge Lids | | | | | Comments |
|---|---|---|---|---|---|---|
| 5 | ~~D~~ | I | 1 | 2 | 3 | |
| 34 | D | ~~I~~ | 1 | 2 | 3 | |
| 38 | D | ~~I~~ | 1 | 2 | 3 | |
| | D | I | 1 | 2 | 3 | |
| | D | I | 1 | 2 | 3 | |
| | D | I | 1 | 2 | 3 | |
| | D | I | 1 | 2 | 3 | |
| | D | I | 1 | 2 | 3 | |
| | D | I | 1 | 2 | 3 | |
| | D | I | 1 | 2 | 3 | |
| | D | I | 1 | 2 | 3 | |
| | D | I | 1 | 2 | 3 | |

D - Decarbonizing
I - Inoperable
B - Base Sand Seal
$F_H$ - Horizontal Flange
R - Riser Lid
G - Gooseneck
$F_V$ - Vertical Flange
V - Valve Body
3 - Observed Leak

$$PLL = \frac{\text{\# Leaking Lids}}{\text{\# Lids Observed}} = \frac{0}{228 - \underset{\text{In-op}}{6} - \underset{\text{LNO}}{3}} = \frac{0}{219} = 0\%$$ Lid Leaks

$$PLO = \frac{\text{\# Leaking Offtakes}}{\text{\# Offtakes Observed}} = \frac{0}{152 - \underset{\text{In-op OFF}}{4} - \underset{\text{ONO}}{2}} = \frac{\quad}{146} = \%$$ Leaking Offtakes

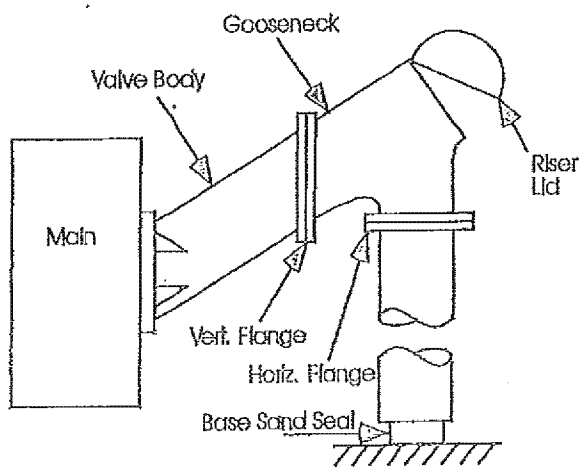


Total Lid Leaks: 0
Total Offtake Leaks: 0

# Door Inspection
## Environmental Quality Management, Inc.
## A K Steel, Middletown Works

Battery: Wilputte  Door Not Observed: _____  Co./EPA Personnel: /

Date: 5/19/18  Inoperable Ovens: _____  Inspector: [illegible]

Shift: 7-3  Certification Expiration Date: N/A

Start Time 10:57 Hr:Min  Start Time 11:04 Hr:Min
End Time 11:00 Hr:Min  End Time 11:08 Hr:Min

**Pusher Side**
Actual T _____ m _____ s = _____ sec.
Allowable T=(304 sec)+(10 sec* _____ ) = _____ sec

| Oven # | Doors | | | Comments |
|---|---|---|---|---|
| 1 | D | C | ~~PU~~ | |
| | D | C | PU | |
| | D | C | PU | |
| | D | C | PU | |
| | D | C | PU | |
| | D | C | PU | |
| | D | C | PU | |
| | D | C | PU | |
| | D | C | PU | |
| | D | C | PU | |
| | D | C | PU | |
| | D | C | PU | |
| | D | C | PU | |
| | D | C | PU | |
| | D | C | PU | |
| | D | C | PU | |
| | D | C | PU | |
| | D | C | PU | |
| | D | C | PU | |

**Coke Side**
Actual T _____ m _____ s = _____ sec.
Allowable T=(304 sec)+(10 sec* _____ ) = _____ sec

| Oven # | Doors | | Comments |
|---|---|---|---|
| 22 | D | ~~PU~~ | |
| 36 | D | ~~PU~~ | |
| 44 | D | ~~PU~~ | |
| 52 | D | ~~PU~~ | |
| 54 | D | ~~PU~~ | |
| 76 | D | ~~PU~~ | |
| | D | PU | |
| | D | PU | |
| | D | PU | |
| | D | PU | |
| | D | PU | |
| | D | PU | |
| | D | PU | |
| | D | PU | |
| | D | PU | |
| | D | PU | |
| | D | PU | |
| | D | PU | |

D - Door  PU - Point Up  C - Chuck

Total Leaks = 1 (PS) + 6 (CS) = 7

Dob = 152 - 4 (Inoperable Doors) - 0 (DNO) = 148

PLD = Door Leaks / Dob = 7 / 148 = 4.73 % Door Leaks

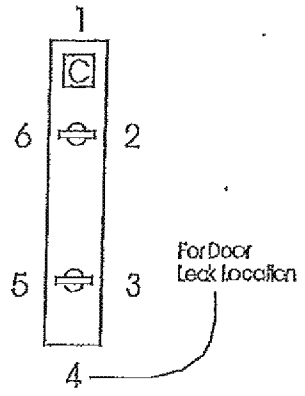

# Collector Main
## Environmental Quality Management, Inc.
## A K Steel, Middletown Works

Battery: Wilputte

Co./EPA Personnel: /

Date: 5/19/18

Inspector: [illegible]

Shift: 7-3

Certification Expiration Date: N/A

| Source | Coke Side Leak Location | Push Side Leak Location | Comments |
|---|---|---|---|
| 1. Spoon Hole Covers | O/K | O/K | |
| 2. Valve Body Flange/Damper Flange | O/K | O/K | |
| 3. Crossovers (4)/Flare Stacks (4) | O/K | O/K | |
| 4. Liquor Piping/Intakes & Steam | O/K | O/K | |

Regulator Back Pressure:
B 6 mm/$H_2O$ with avg. swings of 6 Last 8 hrs
W 7 mm/$H_2O$ with avg. swings of 6 Last 8 hrs

Remarks: Push Side | Coke Side

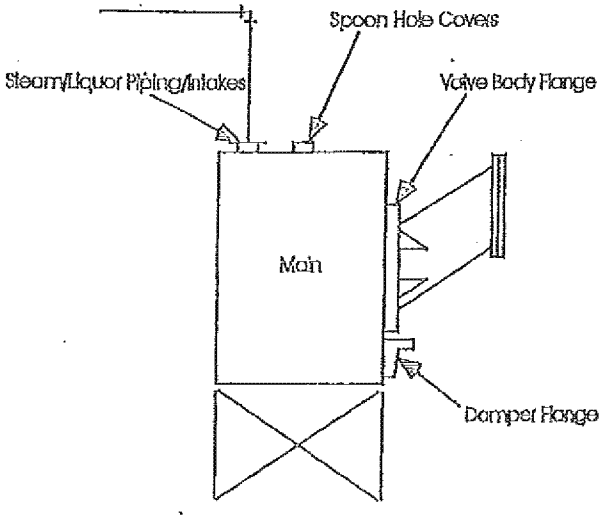


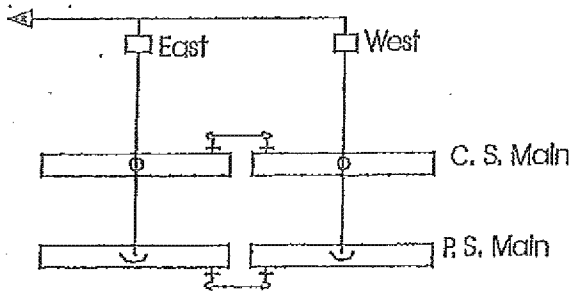

# DAILY REPORT
## ENVIRONMENTAL QUALITY MANAGEMENT, INC.
## A K STEEL, MIDDLETOWN WORKS

Date: 5/20/18

Location: Middletown C.P.

Inspector: Mark Koeller

| | Battery | # Leaking | Total | % Leaking | % Allowable EPA Standards |
|---|---|---|---|---|---|
| Doors | Wilputte | 6 | 148 | 4.05 | 3.3% |
| Lids | Wilputte | 0 | 213 | 0 | 0.4% |
| Standpipes | Wilputte | 0 | 142 | 0 | 2.5% |

Observations (sec.)
Wilputte

6.5
5.0
10.5
8.0
6.0

36.0

Total: 7.2

Average: 12.0

Comments:

# Charging Inspection
## Environmental Quality Management, Inc.
## A K Steel, Middletown Works

Battery Wilputte

Date: 5/20/18

Shift: 7-3

Start Time: 11:24 Hr:Min
End Time: 12:16 Hr:Min
Larry Car # [illegible]

/
Co./EPA Personnel

Inspector: [illegible]

Certification Expiration Date: N/A

Weather/Temp. Clear 82°

| Charge Number | Oven # | Start Time | End Time | Visible Emission Seconds | Visible Emission (a) +1 Second | Ln Ve's (a) +1 Second | Comments |
|---|---|---|---|---|---|---|---|
| 1 | 64 | 11:24 | 11:29 | 6.5 | | | |
| 2 | 66 | 11:36 | 11:41 | 5.0 | | | |
| 3 | 68 | 11:47 | 11:52 | 10.5 | | | |
| 4 | 70 | 12:00 | 12:05 | 8.0 | | | |
| 5 | 72 | 12:11 | 12:16 | 6.0 | | | |
| | | | | | | | |
| | | | | | | | |
| | | | | | | | |
| | | | | | | | |
| | | | | | | | |
| | Total 5 Charges | | | 36.0 | | | ÷5=y= |
| | Average | | | 7.2 | | | $(e^y)$-1=( )-1= |

[a] - For use only when computer printout is not included

# Topside Inspection
## Environmental Quality Management, Inc.
## A K Steel, Middletown Works

Battery: Wilputte  Oven Not Observed: _____  / Co./EPA Personnel

Date: 5/20/18  Inoperable Ovens: _____  Certification Expiration Date: N/A

Shift: 7-3  Inspector: [illegible]

Start Time 11:13 Hr:Min  End Time 11:15 Hr:Min

Start Time 11:16 Hr:Min  End Time 11:18 Hr:Min

Start Time 11:19 Hr:Min  End Time 11:22 Hr:Min

**PS Off Pass**
Actual T 2 m 25 s = ____ sec.
Allowable T=(304 sec)+(10 sec* ____ )= ____ %

**CS Off Pass**
Actual T 2 m 25 s = ____ Sec
Allowable T=(304 sec)+(10 sec* ____ )= ____ %

**Charge Lid Pass**
Actual T 2 m 20 s = ____ sec
Allowable T=(304 sec)+(10 sec* ____ )= ____ %

| Oven # | Push Side Offtakes | | | Comments |
|---|---|---|---|---|
| 64 | D | I | | |
| 66 | D | I | | |
| 68 | D | I | | |
| 34 | D | I | | |
| 38 | D | I | | |
| | D | I | | |
| | D | I | | |
| | D | I | | |
| | D | I | | |
| | D | I | | |
| | D | I | | |
| | D | I | | |

| Oven # | Coke Side Offtakes | | | Comments |
|---|---|---|---|---|
| 64 | D | I | | |
| 66 | D | I | | |
| 68 | D | I | | |
| 34 | D | I | | |
| 38 | D | I | | |
| | D | I | | |
| | D | I | | |
| | D | I | | |
| | D | I | | |
| | D | I | | |
| | D | I | | |
| | D | I | | |

| Oven # | Charge Lids | | | | | Comments |
|---|---|---|---|---|---|---|
| 64 | D | I | 1 | 2 | 3 | |
| 66 | D | I | 1 | 2 | 3 | |
| 68 | D | I | 1 | 2 | 3 | |
| 34 | D | I | 1 | 2 | 3 | |
| 38 | D | I | 1 | 2 | 3 | |
| | D | I | 1 | 2 | 3 | |
| | D | I | 1 | 2 | 3 | |
| | D | I | 1 | 2 | 3 | |
| | D | I | 1 | 2 | 3 | |
| | D | I | 1 | 2 | 3 | |
| | D | I | 1 | 2 | 3 | |
| | D | I | 1 | 2 | 3 | |

D - Decarbonizing
I - Inoperable
B - Base Sand Seal
$F_H$ - Horizontal Flange
R - Riser Lid
G - Gooseneck
$F_V$ - Vertical Flange
V - Valve Body
3 - Observed Leak

$$PLL = \frac{\text{\# Leaking Lids}}{\text{\# Lids Observed}} = \frac{0}{228 - \underset{\text{In-op}}{6} - \underset{\text{LNO}}{9}} = \frac{0}{213} = 0\%$$ Lid Leaks

$$PLO = \frac{\text{\# Leaking Offtakes}}{\text{\# Offtakes Observed}} = \frac{0}{152 - \underset{\text{In-op OFF}}{4} - \underset{\text{ONO}}{6}} = \frac{0}{142} = 0\%$$ Leaking Offtakes

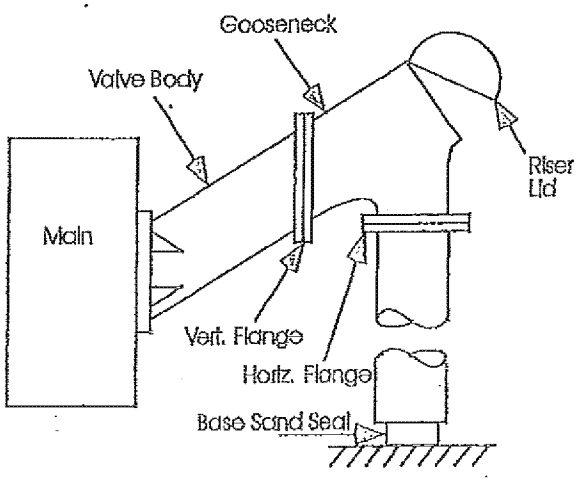


Total Lid Leaks: 0
Total Offtake Leaks: 0

# Door Inspection
## Environmental Quality Management, Inc.
## A.K. Steel, Middletown Works

Battery: Wilputte  Door Not Observed: _____  Co./EPA Personnel: _____

Date: 5/20/19  Inoperable Ovens: _____  Inspector: [signature]

Shift: 7-3  Certification Expiration Date: N/A

Start Time 10:51 Hr:Min  End Time 10:54 Hr:Min

Start Time 10:59 Hr:Min  End Time 11:03 Hr:Min

**Pusher Side**

Actual T 3 m 10 s = _____ sec.

Allowable T=(304 sec)+(10 sec* _____ )= _____ sec

**Coke Side**

Actual T 3 m 50 s = _____ sec.

Allowable T=(304 sec)+(10 sec* _____ )= _____ sec

| Oven # | Doors | | | Comments |
|---|---|---|---|---|
| 24 | D | C | PU | |
| | D | C | PU | |
| | D | C | PU | |
| | D | C | PU | |
| | D | C | PU | |
| | D | C | PU | |
| | D | C | PU | |
| | D | C | PU | |
| | D | C | PU | |
| | D | C | PU | |
| | D | C | PU | |
| | D | C | PU | |
| | D | C | PU | |
| | D | C | PU | |
| | D | C | PU | |
| | D | C | PU | |
| | D | C | PU | |
| | D | C | PU | |
| | D | C | PU | |

| Oven # | Doors | | Comments |
|---|---|---|---|
| 12 | D | PU | |
| 16 | D | PU | |
| 28 | D | PU | |
| 38 | D | PU | |
| 46 | D | PU | |
| | D | PU | |
| | D | PU | |
| | D | PU | |
| | D | PU | |
| | D | PU | |
| | D | PU | |
| | D | PU | |
| | D | PU | |
| | D | PU | |
| | D | PU | |
| | D | PU | |
| | D | PU | |
| | D | PU | |
| | D | PU | |

D - Door  PU - Point Up  C - Chuck

Total Leaks = 1 (PS) + 5 (CS) = 6

Dob = 152 - 4 (Inoperable Doors) - 0 (DNO) = 148

PLD = Door Leaks / Dob = 6 / 148 = 4.05 % Door Leaks

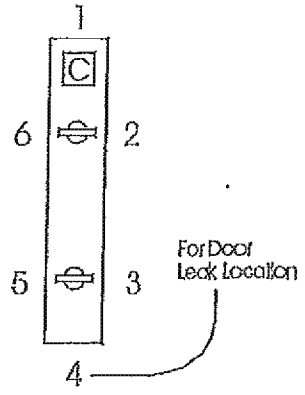

# Collector Main
## Environmental Quality Management, Inc.
## A.K Steel, Middletown Works

Battery: Wilputte

Co./BPA Personnel: /

Date: 5/20/11

Inspector: [illegible]

Shift: 2-3

Certification Expiration Date: N/A

| Source | Coke Side Leak Location | Push Side Leak Location | Comments |
|---|---|---|---|
| 1. Spoon Hole Covers | O/K | O/K | |
| 2. Valve Body Flange/Damper Flange | O/K | O/K | |
| 3. Crossovers (4)/Flare Stacks (4) | O/K | O/K | |
| 4. Liquor Piping/Intakes & Steam | O/K | O/K | |

Regulator Back Pressure:
E 7 mm/$H_2O$ with avg. swings of 6 _____ Last 8 hrs
W 7 mm/$H_2O$ with avg. swings of 6 _____ Last 8 hrs

Remarks:

Push Side

Coke Side

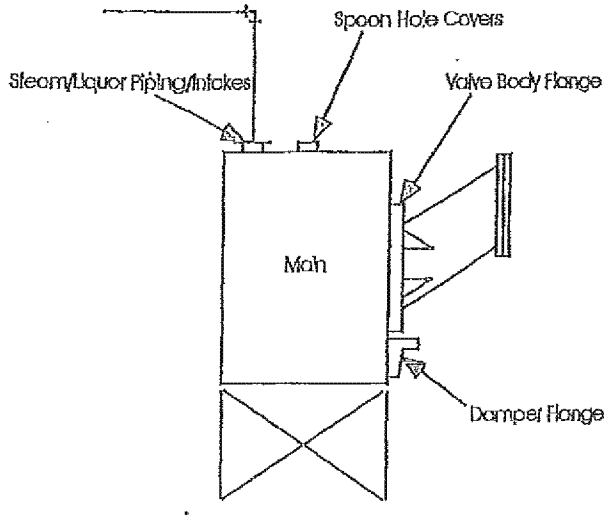


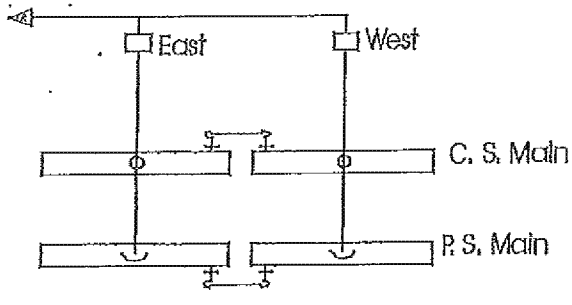

# DAILY REPORT
## ENVIRONMENTAL QUALITY MANAGEMENT, INC.
## A K STEEL, MIDDLETOWN WORKS

Date: 5/21/18

Location: Middletown C.P.

Inspector: Chris Boeller

| | Battery | # Leaking | Total | % Leaking | % Allowable EPA Standards |
|---|---|---|---|---|---|
| Doors | Wilputte | 3 | 148 | 2.03 | 3.3% |
| Lids | Wilputte | 0 | 213 | 0 | 0.4% |
| Standpipes | Wilputte | 0 | 142 | 0 | 2.5% |

| Observations (sec.) Wilputte |
|---|
| 5.5 |
| 3.0 |
| 4.0 |
| 4.5 |
| 6.0 |
| 23.0 |

Total: 4.6

Average: 12.0

Comments:

# Charging Inspection
## Environmental Quality Management, Inc.
## A K Steel, Middletown Works

Battery: Wilputte

Date: 5/21/18

Shift: 7-3

Start Time: 11:58 Hr:Min

End Time: 12:47 Hr:Min

Larry Car #: EAST

Co./EPA Personnel

Inspector: Charles Kell

Certification Expiration Date: N/A

Weather/Temp. Clear 84°

| Charge Number | Oven # | Start Time | End Time | Visible Emission Seconds | Visible Emission (a) +1 Second | Ln Ve's (a) +1 Second | Comments |
|---|---|---|---|---|---|---|---|
| 1 | 50 | 11:58 | 12:03 | 5.5 | | | |
| 2 | 46 | 12:09 | 12:14 | 3.0 | | | Changed out of Service |
| 3 | 52 | 12:19 | 12:24 | 4.0 | | | |
| 4 | 54 | 12:30 | 12:34 | 4.5 | | | |
| 5 | 54 | 12:41 | 12:47 | 6.0 | | | |
| | | | | | | | |
| | | | | | | | |
| | | | | | | | |
| | | | | | | | |
| | | | | | | | |
| | Total 5 Charges | | | 23.0 | | | ÷5=y= |
| | Average | | | 4.6 | | | $(e^y)-1=(\quad)-1=$ |

[a] - For use only when computer printout is not included

# Topside Inspection
## Environmental Quality Management, Inc.
## A K Steel, Middletown Works

Battery: Wilputte  Oven Not Observed: _____  _____ / Co./EPA Personnel

Date: 5/21/18  Inoperable Ovens: _____  Certification Expiration Date: N/A

Shift: 7-3  Inspector: Charlie Kelly

Start Time 11:29 Hr:Min  Start Time 11:32 Hr:Min  Start Time 11:35 Hr:Min
End Time 11:31 Hr:Min  End Time 11:34 Hr:Min  End Time 11:38 Hr:Min

**PS Off Pass**
Actual T 2 m 20 s = ____ sec.
Allowable T=(304 sec)+(10 sec* ____ )= ____ %

| Oven # | Push Side Offtakes | | | Comments |
|---|---|---|---|---|
| 50 | ~~D~~ | I | | |
| 46 | ~~D~~ | I | | |
| 52 | ~~D~~ | I | | |
| 34 | D | ~~I~~ | | |
| 38 | D | ~~I~~ | | |
| | D | I | | |
| | D | I | | |
| | D | I | | |
| | D | I | | |
| | D | I | | |
| | D | I | | |
| | D | I | | |

**CS Off Pass**
Actual T 2 m 15 s = ____ Sec
Allowable T=(304 sec)+(10 sec* ____ )= ____ %

| Oven # | Coke Side Offtakes | | | Comments |
|---|---|---|---|---|
| 50 | ~~D~~ | I | | |
| 46 | ~~D~~ | I | | |
| 52 | ~~D~~ | ~~I~~ | | |
| 34 | D | ~~I~~ | | |
| 38 | D | ~~I~~ | | |
| | D | I | | |
| | D | I | | |
| | D | I | | |
| | D | I | | |
| | D | I | | |
| | D | I | | |
| | D | I | | |

**Charge Lid Pass**
Actual T 2 m 20 s = ____ sec
Allowable T=(304 sec)+(10 sec* ____ )= ____ %

| Oven # | Charge Lids | | | | | Comments |
|---|---|---|---|---|---|---|
| 50 | ~~D~~ | I | 1 | 2 | 3 | |
| 46 | ~~D~~ | I | 1 | 2 | 3 | |
| 52 | ~~D~~ | I | 1 | 2 | 3 | |
| 34 | D | ~~I~~ | 1 | 2 | 3 | |
| 38 | D | ~~I~~ | 1 | 2 | 3 | |
| | D | I | 1 | 2 | 3 | |
| | D | I | 1 | 2 | 3 | |
| | D | I | 1 | 2 | 3 | |
| | D | I | 1 | 2 | 3 | |
| | D | I | 1 | 2 | 3 | |
| | D | I | 1 | 2 | 3 | |
| | D | I | 1 | 2 | 3 | |

D - Decarbonizing
I - Inoperable
B - Base Sand Seal
$F_H$ - Horizontal Flange
R - Riser Lid
G - Gooseneck
$F_V$ - Vertical Flange
V - Valve Body
3 - Observed Leak

$$PLL = \frac{\text{\# Leaking Lids}}{\text{\# Lids Observed}} = \frac{0}{228 - \underset{\text{In-op}}{6} - \underset{\text{LNO}}{9}} = \boxed{0\%} \text{ Lid Leaks} = 213$$

$$PLO = \frac{\text{\# Leaking Offtakes}}{\text{\# Offtakes Observed}} = \frac{0}{152 - \underset{\text{In-op OFF}}{4} - \underset{\text{ONO}}{6}} = \boxed{0\%} \text{ Leaking Offtakes} = 142$$

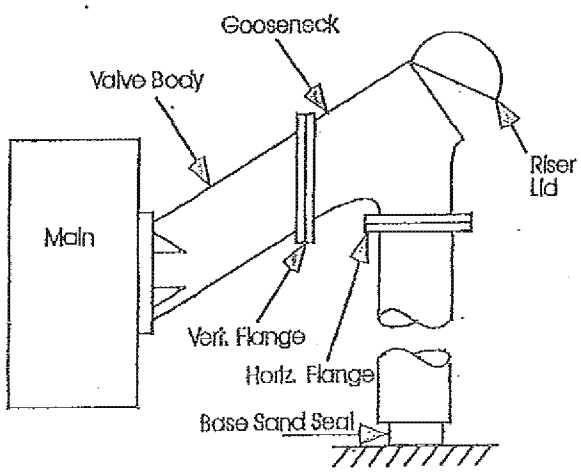


Total Lid Leaks: 0
Total Offtake Leaks: 0

# Door Inspection
## Environmental Quality Management, Inc.
## A K Steel, Middletown Works

Battery: Wilputte  Door Not Observed: _____  1 Co./HPA Personnel

Date: 5/21/18  Inoperable Ovens: _____  Inspector: Charli Fuell

Shift: 7-3  Certification Expiration Date: N/A

Start Time 11:04 Hr:Min  Start Time 11:10 Hr:Min
End Time 11:07 Hr:Min  End Time 11:14 Hr:Min

**Pusher Side**
Actual T 3 m 00 s = _____ sec.
Allowable T=(304 sec)+(10 sec* _____ ) = _____ sec

**Coke Side**
Actual T 3 m 30 s = _____ sec.
Allowable T=(304 sec)+(10 sec* _____ ) = _____ sec

| Oven # | Doors | | | Comments |
|---|---|---|---|---|
| | D | C | PU | |
| | D | C | PU | |
| | D | C | PU | |
| | D | C | PU | |
| | D | C | PU | |
| | D | C | PU | |
| | D | C | PU | |
| | D | C | PU | |
| | D | C | PU | |
| | D | C | PU | |
| | D | C | PU | |
| | D | C | PU | |
| | D | C | PU | |
| | D | C | PU | |
| | D | C | PU | |
| | D | C | PU | |
| | D | C | PU | |
| | D | C | PU | |
| | D | C | PU | |
| | D | C | PU | |

| Oven # | Doors | | Comments |
|---|---|---|---|
| 22 | D | ~~PU~~ | |
| 30 | D | ~~PU~~ | |
| 42 | D | ~~PU~~ | |
| | D | PU | |
| | D | PU | |
| | D | PU | |
| | D | PU | |
| | D | PU | |
| | D | PU | |
| | D | PU | |
| | D | PU | |
| | D | PU | |
| | D | PU | |
| | D | PU | |
| | D | PU | |
| | D | PU | |
| | D | PU | |
| | D | PU | |
| | D | PU | |

D - Door  PU - Point Up  C - Chuck

Total Leaks = 0 (PS) + 3 (CS) = 3

Dob = 152 - 4 (Inoperable Doors) - 0 (DNO) = 148

PLD = Door Leaks / Dob = 3 / 148 = 2.03 % Door Leaks

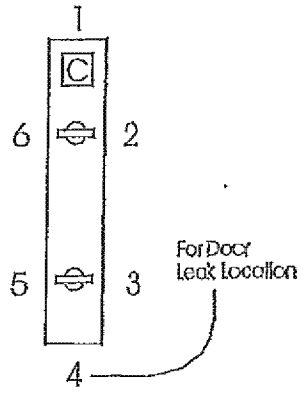

# Collector Main
## Environmental Quality Management, Inc.
## A.K Steel, Middletown Works

Battery: Wilputte

Co./RPA Personnel: /

Date: 5/21/18

Inspector: [illegible]

Shift: 7-3

Certification Expiration Date: N/A

| Source | Coke Side Leak Location | Push Side Leak Location | Comments |
|---|---|---|---|
| 1. Spoon Hole Covers | OK | OK | |
| | | | |
| | | | |
| 2. Valve Body Flange/Damper Flange | OK | OK | |
| | | | |
| | | | |
| 3. Crossovers (4)/Flare Stacks (4) | OK | OK | |
| 4. Liquor Piping/Intakes & Steam | OK | OK | |

Regulator Back Pressure:

| | | | | | |
|---|---|---|---|---|---|
| E | 6 | mm/$H_2O$ with avg. swings of | 6 | | Last 8 hrs |
| W | 6 | mm/$H_2O$ with avg. swings of | 6 | | Last 8 hrs |

Remarks:

Push Side

Coke Side

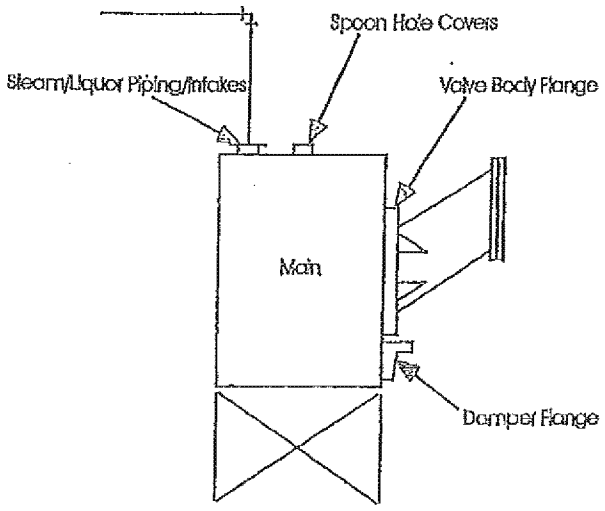


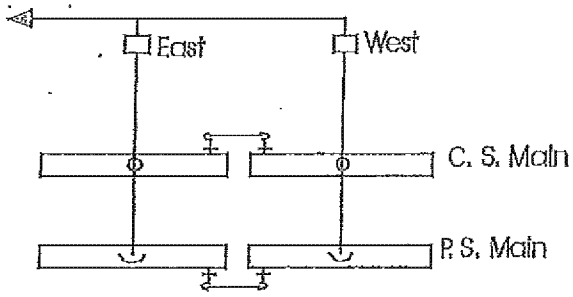

# DAILY REPORT
## ENVIRONMENTAL QUALITY MANAGEMENT, INC.
## A K STEEL, MIDDLETOWN WORKS

Date: 5/22/18

Location: Middletown C.P.

Inspector: Chris Koelle

| | Battery | # Leaking | Total | % Leaking | % Allowable EPA Standards |
|---|---|---|---|---|---|
| Doors | Wilputte | 2 | 148 | 1.35 | 3.3% |
| Lids | Wilputte | 0 | 213 | 0 | 0.4% |
| Standpipes | Wilputte | 0 | 142 | 0 | 2.5% |

| Observations (sec.) Wilputte |
|---|
| 4.5 |
| 5.5 |
| 5.0 |
| 4.0 |
| 6.0 |
| 25.0 |

Total: 5.0

Average: 12.0

Comments:

# Charging Inspection
## Environmental Quality Management, Inc.
## A K Steel, Middletown Works

Battery: Wilputte

Date: 5/22/18

Shift: 7-3

Start Time: 12:43 Hr:Min
End Time: 2:01 Hr:Min
Larry Car #: EAST

Co./EPA Personnel

Inspector: Chuck Kiesle

Certification Expiration Date: N/A

Weather/Temp. Cloy 81°

| Charge Number | Oven # | Start Time | End Time | Visible Emission Seconds | Visible Emission (a) +1 Second | Ln Ve's (a) +1 Second | Comments |
|---|---|---|---|---|---|---|---|
| 1 | 40 | 12:43 | 12:48 | 4.5 | | | |
| 2 | 42 | 12:59 | 1:04 | 5.5 | | | |
| 3 | 44 | 1:29 | 1:34 | 5.0 | | | |
| 4 | 46 | 1:41 | 1:46 | 4.0 | | | |
| 5 | 48 | 1:56 | 2:01 | 6.0 | | | |
| | | | | | | | |
| | | | | | | | |
| | | | | | | | |
| | | | | | | | |
| | | | | | | | |
| | Total 5 Charges | | | 25.0 | | | ÷5=y= |
| | Average | | | 5.0 | | | $(e^y)-1=(\quad)-1=$ |

[a] - For use only when computer printout is not included

# Topside Inspection
## Environmental Quality Management, Inc.
## A K Steel, Middletown Works

Battery: Wilputte  Oven Not Observed: _____  _____ / Co./EPA Personnel

Date: 5/22/18  Inoperable Ovens: _____  Certification Expiration Date: N/A

Shift: 7-3  Inspector: Charles [illegible]

Start Time 12:30 Hr:Min  Start Time 12:33 Hr:Min  Start Time 12:36 Hr:Min
End Time 12:32 Hr:Min  End Time 12:45 Hr:Min  End Time 12:34 Hr:Min

**PS Off Pass**
Actual T 2 m 15 s = ____ sec.
Allowable T=(304 sec)+(10 sec* ____ )= ____ %

**CS Off Pass**
Actual T 2 m 10 s = ____ Sec
Allowable T=(304 sec)+(10 sec* ____ )= ____ %

**Charge Lid Pass**
Actual T 2 m 25 s = ____ sec
Allowable T=(304 sec)+(10 sec* ____ )= ____ %

| Oven # | Push Side Offtakes | | | Comments |
|---|---|---|---|---|
| 40 | D | I | | |
| 42 | D | I | | |
| 44 | D | I | | |
| 34 | D | I | | |
| 38 | D | I | | |
| | D | I | | |
| | D | I | | |
| | D | I | | |
| | D | I | | |
| | D | I | | |
| | D | I | | |
| | D | I | | |

| Oven # | Coke Side Offtakes | | | Comments |
|---|---|---|---|---|
| 40 | D | I | | |
| 42 | D | I | | |
| 44 | D | I | | |
| 34 | D | I | | |
| 38 | D | I | | |
| | D | I | | |
| | D | I | | |
| | D | I | | |
| | D | I | | |
| | D | I | | |
| | D | I | | |
| | D | I | | |

| Oven # | Charge Lids | | | | | Comments |
|---|---|---|---|---|---|---|
| 40 | D | I | 1 | 2 | 3 | |
| 42 | D | I | 1 | 2 | 3 | |
| 44 | D | I | 1 | 2 | 3 | |
| 34 | D | I | 1 | 2 | 3 | |
| 38 | D | I | 1 | 2 | 3 | |
| | D | I | 1 | 2 | 3 | |
| | D | I | 1 | 2 | 3 | |
| | D | I | 1 | 2 | 3 | |
| | D | I | 1 | 2 | 3 | |
| | D | I | 1 | 2 | 3 | |
| | D | I | 1 | 2 | 3 | |
| | D | I | 1 | 2 | 3 | |

D - Decarbonizing
I - Inoperable
B - Base Sand Seal
$F_H$ - Horizontal Flange
R - Riser Lid
G - Gooseneck
$F_V$ - Vertical Flange
V - Valve Body
3 - Observed Leak

$$PLL = \frac{\#\text{ Leaking Lids}}{\#\text{ Lids Observed}} = \frac{0}{228 - \underset{\text{In-op}}{6} - \underset{\text{LNO}}{9}} = \boxed{0\%} \text{ Lid Leaks} = 213$$

$$PLO = \frac{\#\text{ Leaking Offtakes}}{\#\text{ Offtakes Observed}} = \frac{0}{152 - \underset{\text{In-op OFF}}{4} - \underset{\text{ONO}}{6}} = \boxed{0\%} \text{ Leaking Offtakes} = 142$$

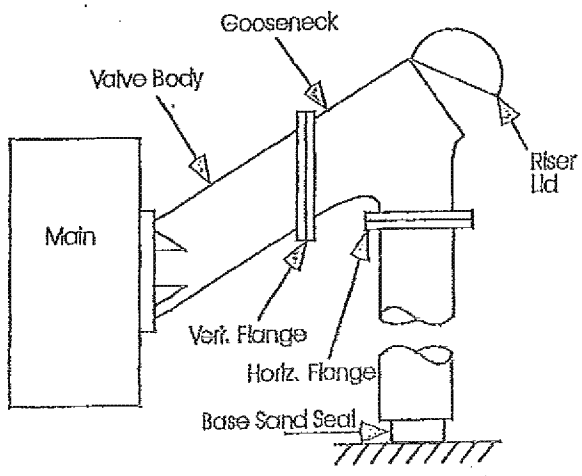


Total Lid Leaks: 0
Total Offtake Leaks: 0

# Door Inspection
## Environmental Quality Management, Inc.
## A K Steel, Middletown Works

Battery: Wilputte  Door Not Observed: _____  Co./EPA Personnel: /

Date: 5/22/18  Inoperable Ovens: _____  Inspector: Charli Kolb

Shift: 7-3  Certification Expiration Date: N/A

Start Time 2:04 Hr:Min  Start Time 2:10 Hr:Min
End Time 2:07 Hr:Min  End Time 2:14 Hr:Min

**Pusher Side**
Actual T 3 m 00 s = _____ sec.

Allowable T=(304 sec)+(10 sec* _____ )= _____ sec

**Coke Side**
Actual T 3 m 20 s = _____ sec.

Allowable T=(304 sec)+(10 sec* _____ )= _____ sec

| Oven # | Doors | | | Comments |
|---|---|---|---|---|
| | D | C | PU | |
| | D | C | PU | |
| | D | C | PU | |
| | D | C | PU | |
| | D | C | PU | |
| | D | C | PU | |
| | D | C | PU | |
| | D | C | PU | |
| | D | C | PU | |
| | D | C | PU | |
| | D | C | PU | |
| | D | C | PU | |
| | D | C | PU | |
| | D | C | PU | |
| | D | C | PU | |
| | D | C | PU | |
| | D | C | PU | |
| | D | C | PU | |
| | D | C | PU | |

| Oven # | Doors | | Comments |
|---|---|---|---|
| 22 | D | ~~PU~~ | |
| 32 | D | ~~PU~~ | |
| | D | PU | |
| | D | PU | |
| | D | PU | |
| | D | PU | |
| | D | PU | |
| | D | PU | |
| | D | PU | |
| | D | PU | |
| | D | PU | |
| | D | PU | |
| | D | PU | |
| | D | PU | |
| | D | PU | |
| | D | PU | |
| | D | PU | |
| | D | PU | |
| | D | PU | |

D - Door  PU - Point Up  C - Chuck

Total Leaks = 0 (PS) + 2 (CS) = 2

Dob = 152 - 4 (Inoperable Doors) - 0 (DNO) = 148

PLD = Door Leaks / Dob = 2 / 148 = 1.35 % Door Leaks

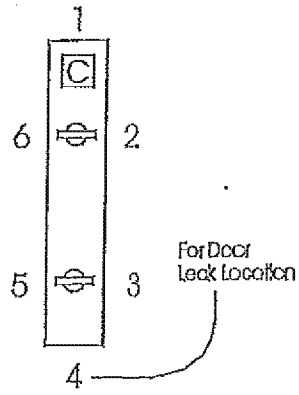

# Collector Main
## Environmental Quality Management, Inc.
## A.K Steel, Middletown Works

Battery: Wilputte

Co./EPA Personnel

Date: 2/22/18

Inspector: [signature]

Shift: 7-3

Certification Expiration Date: N/A

| Source | Coke Side Leak Location | Push Side Leak Location | Comments |
|---|---|---|---|
| 1. Spoon Hole Covers | 0/1 | 0/1 | |
| | | | |
| | | | |
| 2. Valve Body Flange/Damper Flange | 0/1 | 0/1 | |
| | | | |
| | | | |
| 3. Crossovers (4)/Flare Stacks (4) | 0/1 | 0/1 | |
| 4. Liquor Piping/Intakes & Steam | 0/1 | 0/1 | |

Regulator Back Pressure:

E ____ mm/$H_2O$ with avg. swings of 6 ____ Last 8 hrs

W ____ mm/$H_2O$ with avg. swings of 6 ____ Last 8 hrs

Remarks:

Push Side

Coke Side

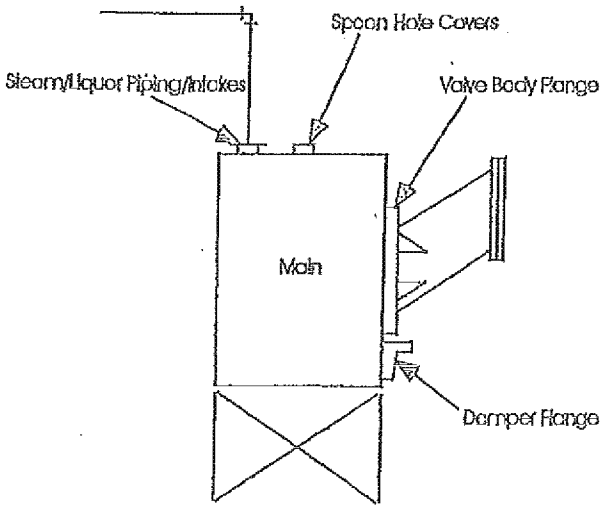


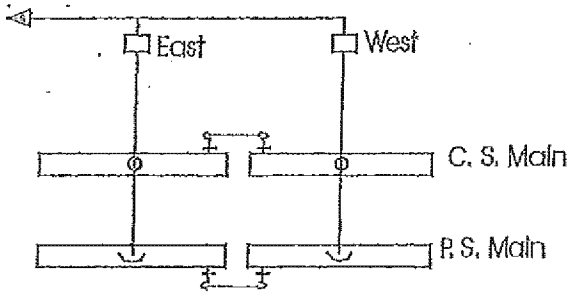

# DAILY REPORT
## ENVIRONMENTAL QUALITY MANAGEMENT, INC.
## A K STEEL, MIDDLETOWN WORKS

Date: 5/23/18

Location: Middletown C.P.

Inspector: [illegible]

| | Battery | # Leaking | Total | % Leaking | % Allowable EPA Standards |
|---|---|---|---|---|---|
| Doors | Wilputte | 1 | 148 | .68 | 3.3% |
| Lids | Wilputte | 0 | 213 | 0 | 0.4% |
| Standpipes | Wilputte | 1 | 142 | .72 | 2.5% |

Observations (sec.)
Wilputte

6.0
8.5
5.0
5.5
7.0

32.0

Total: 6.4

Average: 12.0

Comments:

# Charging Inspection
## Environmental Quality Management, Inc.
### A K Steel, Middletown Works

Battery: Wilputte

Co./BPA Personnel: /

Date: 5/23/18

Inspector: Clark Kiel

Shift: 7-3

Certification Expiration Date: N/A

Weather/Temp. Clear 81°

Start Time: 12:43 Hr:Min

End Time: 1:47 Hr:Min

Larry Car #: E431

| Charge Number | Oven # | Start Time | End Time | Visible Emission Seconds | Visible Emission (a) +1 Second | Ln Ve's (a) +1 Second | Comments |
|---|---|---|---|---|---|---|---|
| 1 | 22 | 12:43 | 12:48 | 6.0 | | | |
| 2 | 24 | 12:54 | 1:09 | 8.5 | | | |
| 3 | 26 | 1:14 | 1:19 | 5.5 | | | |
| 4 | 28 | 1:31 | 1:36 | 5.5 | | | |
| 5 | 30 | 1:42 | 1:47 | 7.0 | | | |
| | | | | | | | |
| | | | | | | | |
| | | | | | | | |
| | | | | | | | |
| | | | | | | | |
| | Total 5 Charges | | | 32.0 | | | ÷5=y= |
| | Average | | | 6.4 | | | $(e^y)-1=(\quad)-1=$ |

[a] - For use only when computer printout is not included

# Topside Inspection
## Environmental Quality Management, Inc.
## A K Steel, Middletown Works

Battery: Wilputte  Oven Not Observed: _____  Co./HPA Personnel: 1

Date: 5/23/18  Inoperable Ovens: _____  Certification Expiration Date: N/A

Shift: 7-3  Inspector: [signature]

| | | | | | |
|---|---|---|---|---|---|
| Start Time | 11:43 Hr:Min | Start Time | 11:47 Hr:Min | Start Time | 11:50 Hr:Min |
| End Time | 11:46 Hr:Min | End Time | 11:49 Hr:Min | End Time | 11:52 Hr:Min |

| PS Off Pass | CS Off Pass | Charge Lid Pass |
|---|---|---|
| Actual T 2 m 25 s = ____ sec. | Actual T 2 m 20 s = ____ Sec | Actual T 2 m 20 s = ____ sec |
| Allowable T=(304 sec)+(10 sec* ____ )= ____ % | Allowable T=(304 sec)+(10 sec* ____ )= ____ % | Allowable T=(304 sec)+(10 sec* ____ )= ____ % |

| Oven # | Push Side Offtakes | | Comments |
|---|---|---|---|
| 22 | D | I | |
| 24 | D | I | |
| 26 | D | I | |
| 34 | D | I | |
| 38 | D | I | |
| | D | I | |
| | D | I | |
| | D | I | |
| | D | I | |
| | D | I | |
| | D | I | |
| | D | I | |

| Oven # | Coke Side Offtakes | | Comments |
|---|---|---|---|
| 22 | D | I | |
| 24 | D | I | |
| 26 | D | I | |
| 34 | D | I | |
| 38 | D | I | |
| | D | I | |
| 22 | D | I | R |
| | D | I | |
| | D | I | |
| | D | I | |
| | D | I | |
| | D | I | |
| | D | I | |

| Oven # | Charge Lids | | | | | Comments |
|---|---|---|---|---|---|---|
| 22 | D | I | 1 | 2 | 3 | |
| 24 | D | I | 1 | 2 | 3 | |
| 26 | D | I | 1 | 2 | 3 | |
| 34 | D | I | 1 | 2 | 3 | |
| 38 | D | I | 1 | 2 | 3 | |
| | D | I | 1 | 2 | 3 | |
| | D | I | 1 | 2 | 3 | |
| | D | I | 1 | 2 | 3 | |
| | D | I | 1 | 2 | 3 | |
| | D | I | 1 | 2 | 3 | |
| | D | I | 1 | 2 | 3 | |
| | D | I | 1 | 2 | 3 | |
| | D | I | 1 | 2 | 3 | |

D - Decarbonizing
I - Inoperable
B - Base Sand Seal
$F_H$ - Horizontal Flange
R - Riser Lid
G - Gooseneck
$F_V$ - Vertical Flange
V - Valve Body
3 - Observed Leak

$$PLL = \frac{\text{\# Leaking Lids}}{\text{\# Lids Observed}} = \frac{0}{228 - \underset{\text{In-op}}{6} - \underset{\text{LNO}}{9}} = \frac{0}{213} = 0\%$$ Lid Leaks

$$PLO = \frac{\text{\# Leaking Offtakes}}{\text{\# Offtakes Observed}} = \frac{1}{152 - \underset{\text{In-op/OFF}}{4} - \underset{\text{ONO}}{6}} = \frac{1}{142} = .7\%$$ Leaking Offtakes

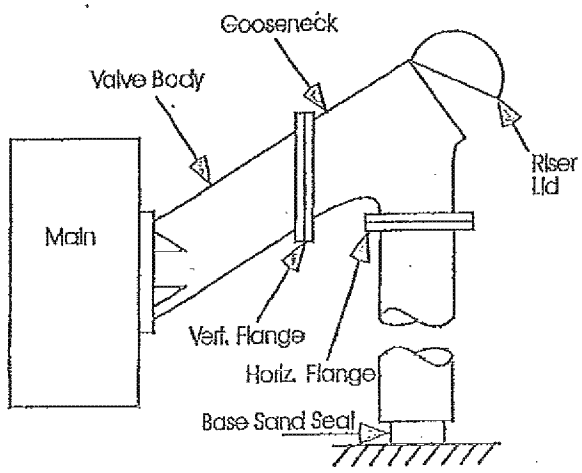


Total Lid Leaks: 0
Total Offtake Leaks: 1

# Door Inspection
## Environmental Quality Management, Inc.
## A K Steel, Middletown Works

Battery: Wilputte  Door Not Observed: _____  Co./EPA Personnel: /

Date: _____  Inoperable Ovens: _____  Inspector: _____

Shift: _____  Certification Expiration Date: N/A

Start Time 12:20 Hr:Min  Start Time 12:26 Hr:Min
End Time 12:23 Hr:Min  End Time 12:30 Hr:Min

**Pusher Side**
Actual T 3 m 00 s = _____ sec.
Allowable T=(304 sec)+(10 sec* _____ ) = _____ sec

**Coke Side**
Actual T 3 m 10 s = _____ sec.
Allowable T=(304 sec)+(10 sec* _____ ) = _____ sec

| Oven # | Doors | | | Comments |
|---|---|---|---|---|
| | D | C | PU | |
| | D | C | PU | |
| | D | C | PU | |
| | D | C | PU | |
| | D | C | PU | |
| | D | C | PU | |
| | D | C | PU | |
| | D | C | PU | |
| | D | C | PU | |
| | D | C | PU | |
| | D | C | PU | |
| | D | C | PU | |
| | D | C | PU | |
| | D | C | PU | |
| | D | C | PU | |
| | D | C | PU | |
| | D | C | PU | |
| | D | C | PU | |
| | D | C | PU | |

| Oven # | Doors | | Comments |
|---|---|---|---|
| 67 | D | ~~PU~~ | |
| | D | PU | |
| | D | PU | |
| | D | PU | |
| | D | PU | |
| | D | PU | |
| | D | PU | |
| | D | PU | |
| | D | PU | |
| | D | PU | |
| | D | PU | |
| | D | PU | |
| | D | PU | |
| | D | PU | |
| | D | PU | |
| | D | PU | |
| | D | PU | |
| | D | PU | |
| | D | PU | |
| | D | PU | |

D - Door  PU - Point Up  C - Chuck

Total Leaks = 0 (PS) + 1 (CS) = 1

Dob = 152 - 4 (Inoperable Doors) - 0 (DNO) = 148

PLD = Door Leaks / Dob = 1 / 148 = 168 % Door Leaks

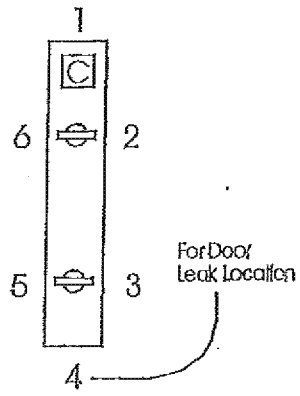

# Collector Main
## Environmental Quality Management, Inc.
## A.K Steel, Middletown Works

Battery: Wilputte

Co./EPA Personnel: /

Date: 5/23/18

Inspector: [illegible]

Shift: 7-3

Certification Expiration Date: N/A

| Source | Coke Side Leak Location | Push Side Leak Location | Comments |
|---|---|---|---|
| 1. Spoon Hole Covers | O/K | O/K | |
| | | | |
| | | | |
| 2. Valve Body Flange/Damper Flange | O/K | O/K | |
| | | | |
| | | | |
| 3. Crossovers (4)/Flare Stacks (4) | O/K | O/K | |
| 4. Liquor Piping/Intakes & Steam | O/K | O/K | |

Regulator Back Pressure:
E 6 mm/$H_2O$ with avg. swings of 6 _____ Last 8 hrs
W 6 mm/$H_2O$ with avg. swings of 6 _____ Last 8 hrs

Remarks: Push Side | Coke Side

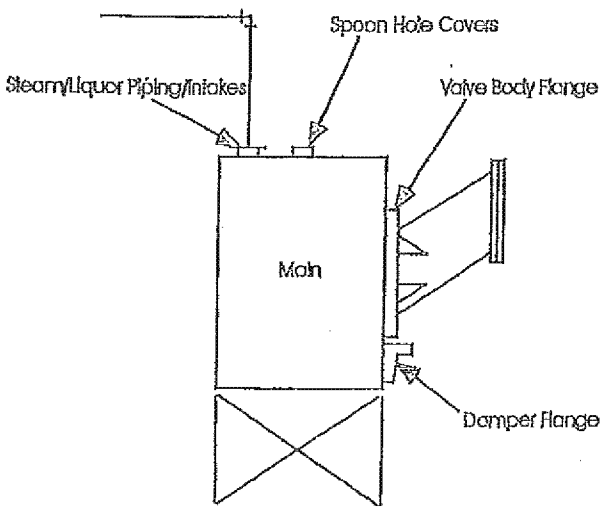


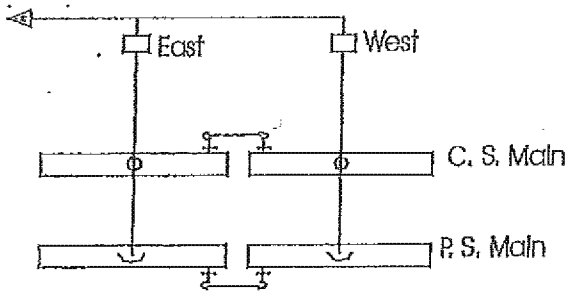

# DAILY REPORT
## ENVIRONMENTAL QUALITY MANAGEMENT, INC.
## A.K STEEL, MIDDLETOWN WORKS

Date: 5/24/18

Location: Middletown C.P.

Inspector: [illegible]

| | Battery | # Leaking | Total | % Leaking | % Allowable EPA Standards |
|---|---|---|---|---|---|
| Doors | Wilputte | 5 | 148 | 3.38 | 3.3% |
| Lids | Wilputte | 0 | 213 | 0 | 0.4% |
| Standpipes | Wilputte | 3 | 142 | 2.17 | 2.5% |

Observations (sec.)

| Wilputte |
|---|
| 73.0 |
| 35.0 |
| 2.5 |
| 4.0 |
| ~~3.0~~ 3.5 ok |
| 118.0 |

Total: 23.6

Average: 12.0

Comments:

# Charging Inspection
## Environmental Quality Management, Inc.
## A K Steel, Middletown Works

Battery: Wilputte

Co./EPA Personnel: /

Date: 5/24/18

Inspector: [illegible]

Shift: 7-3

Certification Expiration Date: N/A

Start Time: 12:54 Hr:Min

End Time: 2:20 Hr:Min

Larry Car #: EAST

Weather/Temp. Clear 84°

| Charge Number | Oven # | Start Time | End Time | Visible Emission Seconds | Visible Emission (a) +1 Second | Ln Ve's (a) +1 Second | Comments |
|---|---|---|---|---|---|---|---|
| 1 | 6 | 12:54 | 1:00 | 73.0 | | | |
| 2 | 8 | 1:15 | 1:21 | 35.0 | | | |
| 3 | 10 | 1:38 | 1:44 | 2.5 | | | |
| 4 | 12 | 1:58 | 2:04 | 4.0 | | | |
| 5 | 14 | 2:14 | 2:20 | ~~3.0~~ 3.5 | | | |
| | | | | | | | |
| | | | | | | | |
| | | | | | | | |
| | | | | | | | |
| | | | | | | | |
| | Total 5 Charges | | | 118.0 | | | ÷5=y= |
| | Average | | | 23.6 | | | $(e^y)-1=(\quad)-1=$ |

[a] - For use only when computer printout is not included

# Topside Inspection
## Environmental Quality Management, Inc.
## A K Steel, Middletown Works

Battery: Wilputte  Oven Not Observed: _____  Co./EPA Personnel: /

Date: 5/24/18  Inoperable Ovens: _____  Certification Expiration Date: N/A

Shift: 7-3  Inspector: [illegible]

| | | | | | | | | |
|---|---|---|---|---|---|---|---|---|
| Start Time | 12:32 | Hr:Min | Start Time | 12:35 | Hr:Min | Start Time | 12:38 | Hr:Min |
| End Time | 12:34 | Hr:Min | End Time | 12:37 | Hr:Min | End Time | 12:40 | Hr:Min |

| PS Off Pass | CS Off Pass | Charge Lid Pass |
|---|---|---|
| Actual T ___ m ___ s = ___ sec. | Actual T ___ m ___ s = ___ Sec | Actual T ___ m ___ s = ___ sec |
| Allowable T=(304 sec)+(10 sec* ___ )= ___ % | Allowable T=(304 sec)+(10 sec* ___ )= ___ % | Allowable T=(304 sec)+(10 sec* ___ )= ___ % |

| Oven # | Push Side Offtakes | | | Comments |
|---|---|---|---|---|
| 6 | D | I | | |
| 8 | D | I | | |
| 10 | D | I | | |
| 34 | D | X | | |
| 38 | D | X | | |
| | D | I | | |
| 44 | D | I | | B |
| | D | I | | |
| | D | I | | |
| | D | I | | |
| | D | I | | |
| | D | I | | |

| Oven # | Coke Side Offtakes | | | Comments |
|---|---|---|---|---|
| 6 | D | I | | |
| 8 | D | I | | |
| 10 | D | I | | |
| 34 | D | X | | |
| 38 | D | X | | |
| | D | I | | |
| 41 | D | I | | R |
| 43 | D | I | | R |
| | D | I | | |
| | D | I | | |
| | D | I | | |
| | D | I | | |

| Oven # | Charge Lids | | | | | Comments |
|---|---|---|---|---|---|---|
| 6 | D | I | 1 | 2 | 3 | |
| 8 | D | I | 1 | 2 | 3 | |
| 10 | D | I | 1 | 2 | 3 | |
| 34 | D | I | 1 | 2 | 3 | |
| 38 | D | I | 1 | 2 | 3 | |
| | D | I | 1 | 2 | 3 | |
| | D | I | 1 | 2 | 3 | |
| | D | I | 1 | 2 | 3 | |
| | D | I | 1 | 2 | 3 | |
| | D | I | 1 | 2 | 3 | |
| | D | I | 1 | 2 | 3 | |
| | D | I | 1 | 2 | 3 | |

D - Decarbonizing
I - Inoperable
B - Base Sand Seal
$F_H$ - Horizontal Flange
R - Riser Lid
G - Gooseneck
$F_V$ - Vertical Flange
V - Valve Body
3 - Observed Leak

$$PLL = \frac{\text{\# Leaking Lids}}{\text{\# Lids Observed}} = \frac{0}{228 - \underset{\text{In-op}}{6} - \underset{\text{LNO}}{9}} = \frac{0}{213} = 0\%$$ Lid Leaks

$$PLO = \frac{\text{\# Leaking Offtakes}}{\text{\# Offtakes Observed}} = \frac{3}{152 - \underset{\text{In-op OFF}}{4} - \underset{\text{ONO}}{6}} = \frac{3}{142} = 2.1\%$$ Leaking Offtakes

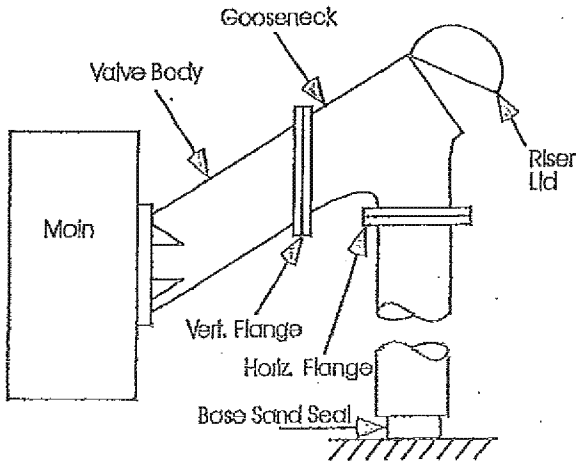


Total Lid Leaks: 0
Total Offtake Leaks: 3

# Door Inspection
## Environmental Quality Management, Inc.
## A K Steel, Middletown Works

Battery: Wilputte  Door Not Observed: _____  1 Co./EPA Personnel

Date: 5/24/18  Inoperable Ovens: _____  Inspector: [illegible]

Shift: 7-3  Certification Expiration Date: N/A

Start Time 12:05 Hr:Min  Start Time 12:12 Hr:Min
End Time 12:08 Hr:Min  End Time 12:16 Hr:Min

**Pusher Side**

Actual T 3 m 30 s = _____ sec.

Allowable T=(304 sec)+(10 sec* _____ ) = _____ sec

| Oven # | Doors | | | Comments |
|---|---|---|---|---|
| 15 | D | C | ~~PU~~ | |
| 41 | D | C | ~~PU~~ | |
| 43 | D | C | ~~PU~~ | |
| | D | C | PU | |
| | D | C | PU | |
| | D | C | PU | |
| | D | C | PU | |
| | D | C | PU | |
| | D | C | PU | |
| | D | C | PU | |
| | D | C | PU | |
| | D | C | PU | |
| | D | C | PU | |
| | D | C | PU | |
| | D | C | PU | |
| | D | C | PU | |
| | D | C | PU | |
| | D | C | PU | |
| | D | C | PU | |

**Coke Side**

Actual T _____ m _____ s = _____ sec.

Allowable T=(304 sec)+(10 sec* _____ ) = _____ sec

| Oven # | Doors | | Comments |
|---|---|---|---|
| 15 | D | ~~PU~~ | |
| 47 | D | ~~PU~~ | |
| | D | PU | |
| | D | PU | |
| | D | PU | |
| | D | PU | |
| | D | PU | |
| | D | PU | |
| | D | PU | |
| | D | PU | |
| | D | PU | |
| | D | PU | |
| | D | PU | |
| | D | PU | |
| | D | PU | |
| | D | PU | |
| | D | PU | |
| | D | PU | |
| | D | PU | |

D - Door  PU - Point Up  C - Chuck

Total Leaks = 3 (PS) + 2 (CS) = 5

Dob = 152 - 4 (Inoperable Doors) - 0 (DNO) = 148

PLD = Door Leaks / Dob = 5 / 148 = 3.38 % Door Leaks

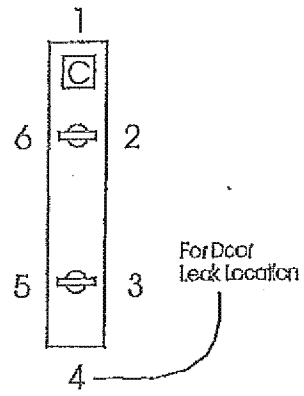

# Collector Main
## Environmental Quality Management, Inc.
## A K Steel, Middletown Works

Battery Wilputte

Co./EPA Personnel

Date: 5/24/18

Inspector: Charles Koelle

Shift: 7-3

Certification Expiration Date: N/A

| Source | Coke Side Leak Location | Push Side Leak Location | Comments |
|---|---|---|---|
| 1. Spoon Hole Covers | O/K | O/K | |
| | | | |
| | | | |
| 2. Valve Body Flange/Damper Flange | O/K | O/K | |
| | | | |
| | | | |
| 3. Crossovers (4)/Flare Stacks (4) | O/K | O/K | |
| 4. Liquor Piping/Intakes & Steam | O/K | O/K | |

Regulator Back Pressure:

E 7 mm/$H_2O$ with avg. swings of 6 Last 8 hrs

W 6 mm/$H_2O$ with avg. swings of 6 Last 8 hrs
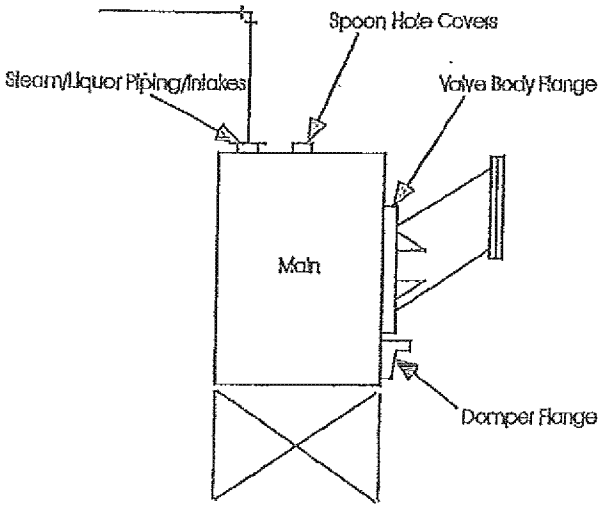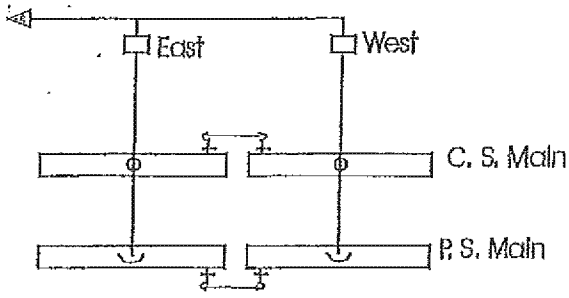
Remarks: **Push Side** **Coke Side**