Copyright 1998 -2010 Pamela L Schwab

SEDIMENT BASIN
SB 001 PHASE 2
SPILLWAY DESIGN

Seven Hills Mine

Permit S-357

General Information

Storm Information:

Storm Type:	NRCS Type II
Design Storm:	100 yr - 6 hr
Rainfall Depth:	4.700 inches

Structure Networking:

Type	Stru #	(flows into)	Stru #	Musk. K (hrs)	Musk. X	Description
Channel	#1	==>	#2	0.000	0.000	CDD 001C
Channel	#2	==>	#3	0.000	0.000	CDD 001A
Pond	#3	==>	End	0.000	0.000	SB 001 PHASE 2

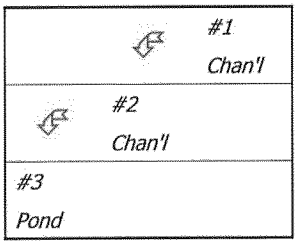

Structure Summary:

		Immediate Contributing Area (ac)	Total Contributing Area (ac)	Peak Discharge (cfs)	Total Runoff Volume (ac-ft)
#1		1,235.000	1,235.000	1,008.64	201.43
#2		83.000	1,318.000	1,070.42	215.92
#3	In	442.600	1,760.600	1,449.10	293.25
	Out			323.16	113.20

Structure Detail:

Structure #1 (Vegetated Channel)

CDD 001C

Trapezoidal Vegetated Channel Inputs:

Material: Grass mixture

Bottom Width (ft)	Left Sideslope Ratio	Right Sideslope Ratio	Slope (%)	Retardance Classes	Freeboard Depth (ft)	Freeboard % of Depth	Freeboard Mult. x (VxD)	Limiting Velocity (fps)
30.00	2.0:1	2.0:1	0.1	D, B	0.32			5.0

Vegetated Channel Results:

	Stability Class D w/o Freeboard	Stability Class D w/ Freeboard	Capacity Class B w/o Freeboard	Capacity Class B w/ Freeboard
Design Discharge:	1,008.64 cfs		1,008.64 cfs	
Depth:	5.10 ft	5.42 ft	6.18 ft	6.50 ft
Top Width:	50.42 ft	51.70 ft	54.71 ft	55.99 ft
Velocity:	4.92 fps		3.85 fps	
X-Section Area:	205.21 sq ft		261.72 sq ft	
Hydraulic Radius:	3.885 ft		4.541 ft	
Froude Number:	0.43		0.31	
Roughness Coefficient:	0.0237		0.0335	

Structure #2 (Vegetated Channel)

CDD 001A

Trapezoidal Vegetated Channel Inputs:

Material: Grass mixture

Bottom Width (ft)	Left Sideslope Ratio	Right Sideslope Ratio	Slope (%)	Retardance Classes	Freeboard Depth (ft)	Freeboard % of Depth	Freeboard Mult. x (VxD)	Limiting Velocity (fps)
30.00	2.0:1	2.0:1	0.1	D, B	0.31			5.0

Vegetated Channel Results:

	Stability Class D w/o Freeboard	Stability Class D w/ Freeboard	Capacity Class B w/o Freeboard	Capacity Class B w/ Freeboard
Design Discharge:	1,070.42 cfs		1,070.42 cfs	
Depth:	5.23 ft	5.54 ft	6.29 ft	6.60 ft
Top Width:	50.93 ft	52.17 ft	55.16 ft	56.40 ft
Velocity:	5.06 fps		4.00 fps	
X-Section Area:	211.70 sq ft		267.81 sq ft	
Hydraulic Radius:	3.965 ft		4.607 ft	
Froude Number:	0.44		0.32	
Roughness Coefficient:	0.0233		0.0326	

Structure #3 (Pond)

SB 001 PHASE 2

Pond Inputs:

Initial Pool Elev:	358.00 ft
Initial Pool:	109.59 ac-ft

Straight Pipe

Barrel Diameter (in)	Barrel Length (ft)	Barrel Slope (%)	Manning's n	Spillway Elev (ft)	Entrance Loss Coefficient	Tailwater Depth (ft)
60.00	120.00	0.10	0.0150	378.00	0.90	0.00

Straight Pipe

Barrel Diameter (in)	Barrel Length (ft)	Barrel Slope (%)	Manning's n	Spillway Elev (ft)	Entrance Loss Coefficient	Tailwater Depth (ft)
60.00	120.00	0.10	0.0150	378.00	0.90	0.00

Straight Pipe

Barrel Diameter (in)	Barrel Length (ft)	Barrel Slope (%)	Manning's n	Spillway Elev (ft)	Entrance Loss Coefficient	Tailwater Depth (ft)
60.00	120.00	0.10	0.0150	378.00	0.90	0.00

Straight Pipe

Barrel Diameter (in)	Barrel Length (ft)	Barrel Slope (%)	Manning's n	Spillway Elev (ft)	Entrance Loss Coefficient	Tailwater Depth (ft)
60.00	120.00	0.10	0.0150	378.00	0.90	0.00

Pond Results:

Peak Elevation:	382.27 ft
Dewater Time:	0.19 days

Dewatering time is calculated from peak stage to lowest spillway

Elevation-Capacity-Discharge Table

Elevation	Area (ac)	Capacity (ac-ft)	Discharge (cfs)	Dewater Time (hrs)	
342.00	5.980	0.000	0.000		
342.01	5.981	0.060	0.000		
344.00	6.190	12.169	0.000		
346.00	6.402	24.761	0.000		
348.00	6.619	37.782	0.000		
350.00	6.839	51.240	0.000		
352.00	7.063	65.142	0.000		
354.00	7.291	79.495	0.000		
356.00	7.522	94.307	0.000		
358.00	7.756	109.585	0.000		
360.00	7.995	125.336	0.000		
362.00	8.237	141.566	0.000		
363.00	8.359	149.864	0.000		
364.00	8.482	158.284	0.000		
366.00	8.731	175.496	0.000		
368.00	8.983	193.210	0.000		
370.00	9.240	211.432	0.000		
372.00	9.499	230.170	0.000		
374.00	9.763	249.432	0.000		
376.00	10.030	269.223	0.000		
378.00	10.300	289.552	0.000		Spillway #1 Spillway #2 Spillway #3 Spillway #4
380.00	10.564	310.416	138.766	1.82*	
382.00	10.832	331.812	288.492	2.20	
382.27	10.870	334.746	323.161	0.65	Peak Stage
384.00	11.103	353.747	547.632		
385.00	11.240	364.918	677.033		

**Designates time(s) to dewater have been extrapolated beyond the 50 hour hydrograph limit.*

Detailed Discharge Table

Elevation (ft)	Straight Pipe (cfs)	Straight Pipe (cfs)	Straight Pipe (cfs)	Straight Pipe (cfs)	Combined Total Discharge (cfs)
342.00	0.000	0.000	0.000	0.000	0.000
342.01	0.000	0.000	0.000	0.000	0.000
344.00	0.000	0.000	0.000	0.000	0.000
346.00	0.000	0.000	0.000	0.000	0.000
348.00	0.000	0.000	0.000	0.000	0.000
350.00	0.000	0.000	0.000	0.000	0.000
352.00	0.000	0.000	0.000	0.000	0.000
354.00	0.000	0.000	0.000	0.000	0.000
356.00	0.000	0.000	0.000	0.000	0.000
358.00	0.000	0.000	0.000	0.000	0.000
360.00	0.000	0.000	0.000	0.000	0.000
362.00	0.000	0.000	0.000	0.000	0.000
363.00	0.000	0.000	0.000	0.000	0.000
364.00	0.000	0.000	0.000	0.000	0.000
366.00	0.000	0.000	0.000	0.000	0.000
368.00	0.000	0.000	0.000	0.000	0.000
370.00	0.000	0.000	0.000	0.000	0.000
372.00	0.000	0.000	0.000	0.000	0.000
374.00	0.000	0.000	0.000	0.000	0.000
376.00	0.000	0.000	0.000	0.000	0.000
378.00	0.000	0.000	0.000	0.000	0.000
380.00	(1)>34.691	(1)>34.691	(1)>34.691	(1)>34.691	138.766
382.00	(1)>72.123	(1)>72.123	(1)>72.123	(1)>72.123	288.492
384.00	(3)>136.908	(3)>136.908	(3)>136.908	(3)>136.908	547.632
385.00	(6)>169.258	(6)>169.258	(6)>169.258	(6)>169.258	677.033

Subwatershed Hydrology Detail:

Stru #	SWS #	SWS Area (ac)	Time of Conc (hrs)	Musk K (hrs)	Musk X	Curve Number	UHS	Peak Discharge (cfs)	Runoff Volume (ac-ft)
#1	1	1,235.000	1.657	0.000	0.000	78.000	M	1,008.64	201.426
	Σ	**1,235.000**						**1,008.64**	**201.426**
#2	1	83.000	0.793	0.000	0.000	80.000	M	119.58	14.495
	Σ	**1,318.000**						**1,070.42**	**215.922**
#3	1	442.600	0.786	0.000	0.000	80.000	M	641.17	77.329
	Σ	**1,760.600**						**1,449.10**	**293.251**

Subwatershed Time of Concentration Details:

Stru #	SWS #	Land Flow Condition	Slope (%)	Vert. Dist. (ft)	Horiz. Dist. (ft)	Velocity (fps)	Time (hrs)
#1	1	4. Cultivated, straight row	4.40	22.00	500.00	1.870	0.074
		8. Large gullies, diversions, and low flowing streams	0.55	69.00	12,600.00	2.210	1.583
#1	**1**	**Time of Concentration:**					**1.657**
#2	1	1. Forest with heavy ground litter	8.00	40.00	500.00	0.710	0.195
		8. Large gullies, diversions, and low flowing streams	0.25	8.00	3,210.00	1.490	0.598
#2	**1**	**Time of Concentration:**					**0.793**
#3	1	1. Forest with heavy ground litter	12.00	60.00	500.00	0.870	0.159
		8. Large gullies, diversions, and low flowing streams	1.37	108.00	7,910.00	3.500	0.627
#3	**1**	**Time of Concentration:**					**0.786**

Sediment Basin Design Summary

24-Aug-17

I. General Information

Mine:	Seven Hills Mine, Permit #357
Basin:	SB 001 PHASE 2
Basin Type:	Incised
Examination Exempt:	Yes

II. Design Parameters:

Design Storm Event : (10yr/24hr)	R=	4.50	
Runoff Area (RA) (Treatment and Detention)	RA =	1760.60	
Runoff Curve Number:	CN =	80	
Unitless number	S = ((1000)/Cn)-10 =	2.50	
Runoff (Q) - Watershed Inches	Q = ((P-0.2S)^2)/(P+0.8S) =	2.46	
Runoff Coefficient (RC)	RC = Q / R =	0.55	0.547008547

III. Runoff Calculation:

RV = Q (in / 24hr) * 1ft/12 in * Runoff Area (ac) * 43,560 sq ft /ac

Where: RV = runoff volume (cubic ft/24hr)
Q = runoff design event (inches/24hr)

RV = 15,731,638 cubic ft /24hr 361.15 acre ft

IV. Treatment Volume Calculation:

Detention Time: DT	10	hours	
Sediment Volume: SV	1610960	cubic ft	
Pit Pumpage Volume: PV	1000	gpm	
Design Sediment Storage: SV (see USLE Calculations attached)	1610960	cubic ft	36.98 acre ft

MCV = RV cf / 24hr * 1day/24hr * DT hr + PV gpm * 1440 min/day * 1day/24hr *0.1337 cf/gal * DT hr + SV cf

Minimum Compliance volume= 8,246,029 cubic ft **189.30 acre ft**

Basin Freeboard:	2.0 ft minimum at pool	
Basin Surface area:	10.30 acres	448668 sq ft
Basin Minimum Average depth	18.38 ft	

Sediment Basin Design:
Universal Soil Loss Calculation:

24-Aug-17

Mine: Seven Hills Mine, Permit #357 **Basin:** SB 001 PHASE 2

Soil Loss per Unit Area:

A= R * K * LS*CP A = 32.94 tons/acre

where: A = Soil loss per acre (tons/acre)

R = Rainfall-Erosivity Factor	200
K = Soil Erodibility Factor	0.43
LS = Length Slope Factor	2.82
CP = Cropping Practice Factor	0.14

LS Factor Calculation

LS = (FSL/72.6)^m * ((430x^2 + 30x + 0.43) / 6.613)) 2.82

where: FSL = Field Slope Length 900.00

x = Field Slope Ratio 0.0770

m = slope factor 0.5

slope < 3% m=0.3 , = 4% m=0.4, >5% m=0.5

CP Weighted Factor Calculation

Ground Cover Description	CP Value	Area (ac)	CP*ac	
Active Disturbed area	0.90	100.00	90.00	
Reclaimed or Undisturbed	0.09	1660.60	149.45	Weighted CP
		1760.60	239.45	0.14

Sediment Delivery Ratio:

D = Da * Dv * Dc * Dp D= 0.25

where: D = sediment delivery ratio

Da = area delivery ratio	0.50
Dv = Vegetation trapping factor	1.00
Dc = Channelization factor	0.50
Dp = pit deposition factor	1.00

Sediment Yield From Design Watershed:

Y = A * D Y= 8.24 tons/acre

where: Y = Watershed Sediment Yield (Tons / Acre)

A = Soil loss per area (Tons / Acre)

D = Sediment Delivery Ratio

Life of Basin 5.0 years

Sediment Yield Conversion Ac ft / ac year:

Y2 (ac ft/ ac yr) =(Y t/ac * 2000 lb/t) / (90 lb/cubic ft * 43560 sq ft / ac)

Y2= 0.00420 ac ft / ac yr

Sediment Storage Calculation:

SL = RA * Y2 * YR * 43560 **Design Sediment Storage =** 1610960 cubic ft

36.98 Ac/ft

EPA-R5-2018-0056560000032

SB 001 Phase 2, Volume Summary

Surface Area : 10.3 acres
Impounded volume: 0.0 ac ft
Treatment volume: 289.75 ac ft
Minimum Compliance Volume: 189.30 ac ft
Surplus Volume: 100.45 ac ft

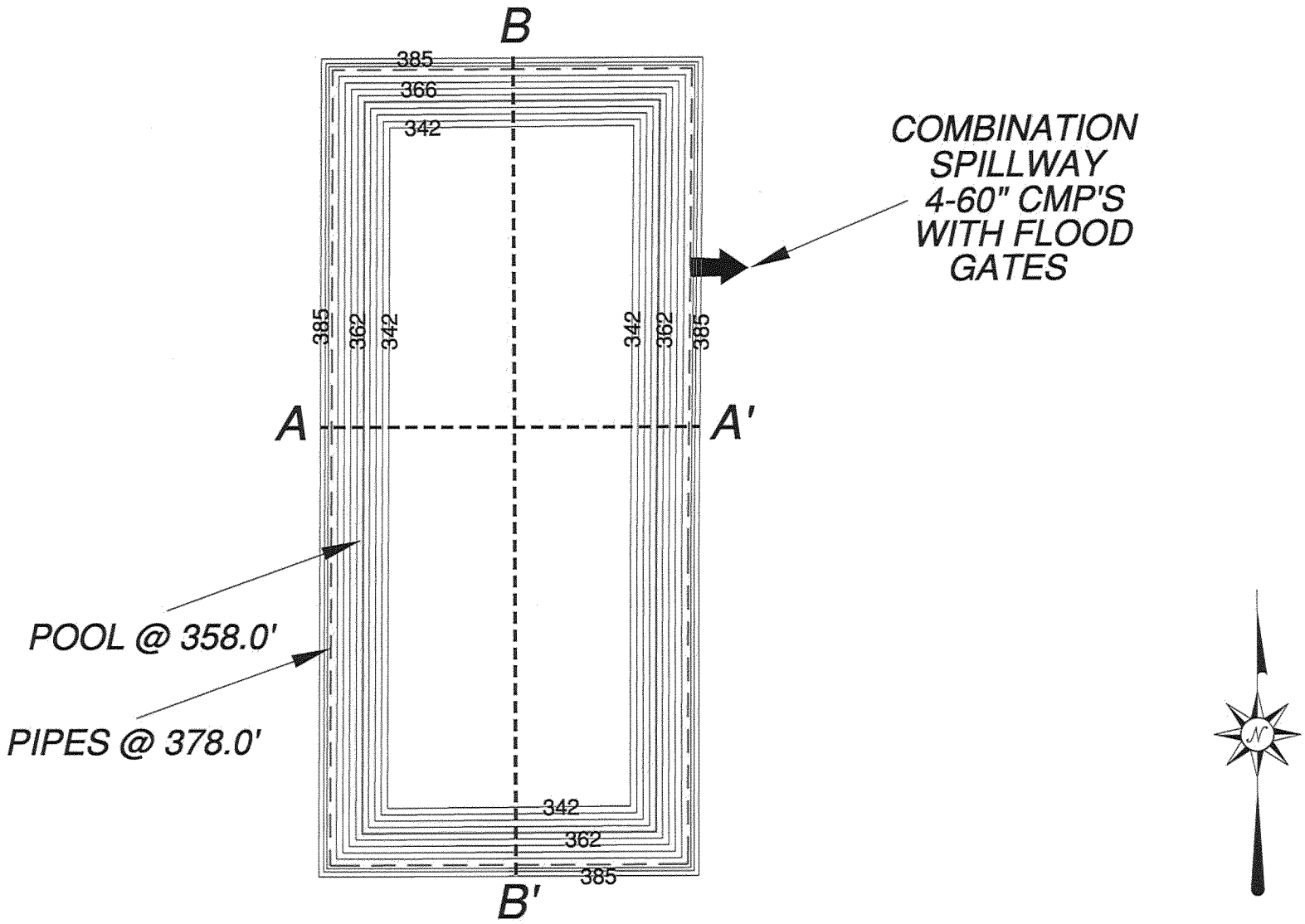

HOR. 1" = 200'

UMI LLC 566 Dickeyville Road, Lynnville IN	DATE: 8-16-2017	REVISION NO.: DATE:
Sediment Control Basin SB 001 Phase 2 Plan View Seven Hills Mine, Permit S-357	SCALE: 1 in = 200 ft SHEET 1 OF 2	NOTES:

SB 001 Phase 2

Cross-section A - A'

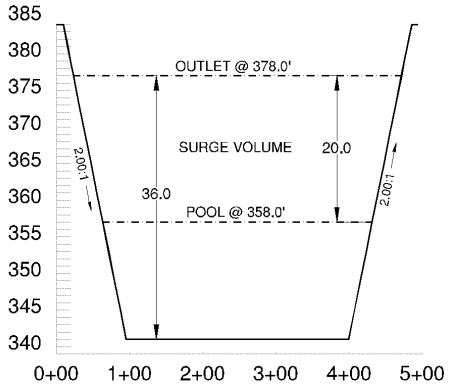

HZ 1" = 200' VT 1" = 20'

Combination Spillway

(LCP-1, LEVEE CULVERT PIPE)

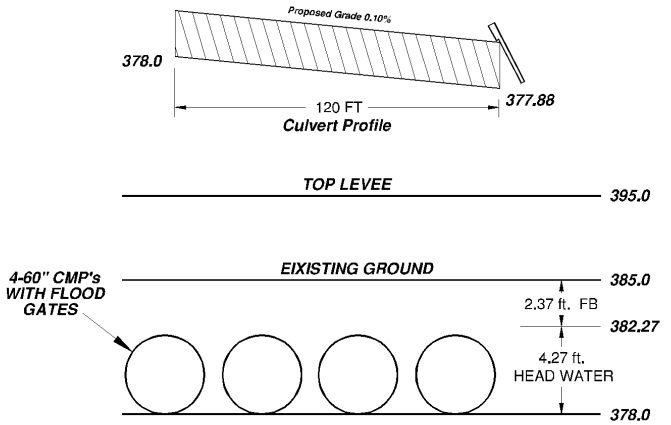

Cross-section B - B'

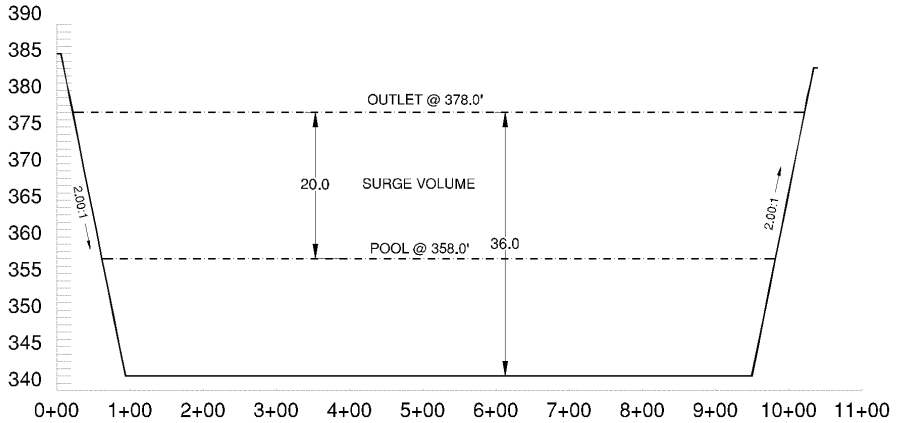

HZ 1" = 200' VT 1" = 20'

UMI LLC 566 Dickeyville Road, Lynnville IN	DATE: 8-16-2017	REVISION NO.: DATE:
Sediment Control Basin SB 001 Phase 2 Cross-sections and Spillway Section Seven Hills Mine, Permit S-357	SCALE: As noted SHEET 2 OF 2	NOTES: