Copyright 1998 -2010 Pamela L Schwab

LEVEE CULVERT PIPES
LCP-1

Seven Hills Mine

Permit S-357

General Information

Storm Information:

Storm Type:	NRCS Type II
Design Storm:	100 yr - 6 hr
Rainfall Depth:	4.700 inches

Structure Networking:

Type	Stru #	(flows into)	Stru #	Musk. K (hrs)	Musk. X	Description
Pond	#1	==>	#3	0.000	0.000	SB 001
Channel	#2	==>	#3	0.000	0.000	OFD 001
Pond	#3	==>	End	0.000	0.000	LCP-1

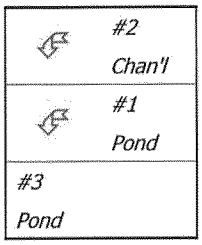

Structure Summary:

		Immediate Contributing Area (ac)	Total Contributing Area (ac)	Peak Discharge (cfs)	Total Runoff Volume (ac-ft)
#2		384.200	384.200	312.14	62.67
#1	In	142.000	142.000	308.02	26.60
	Out			133.32	26.60
#3	In	0.000	526.200	430.48	89.27
	Out			430.27	89.27

Structure Detail:

Structure #2 (Vegetated Channel)

OFD 001

Trapezoidal Vegetated Channel Inputs:

Material: Grass mixture

Bottom Width (ft)	Left Sideslope Ratio	Right Sideslope Ratio	Slope (%)	Retardance Classes	Freeboard Depth (ft)	Freeboard % of Depth	Freeboard Mult. x (VxD)	Limiting Velocity (fps)
8.00	2.0:1	2.0:1	0.4	D, B	0.58			5.0

Vegetated Channel Results:

	Stability Class D w/o Freeboard	Stability Class D w/ Freeboard	Capacity Class B w/o Freeboard	Capacity Class B w/ Freeboard
Design Discharge:	312.14 cfs		312.14 cfs	
Depth:	3.52 ft	4.10 ft	4.42 ft	5.00 ft
Top Width:	22.07 ft	24.39 ft	25.70 ft	28.02 ft
Velocity:	5.90 fps		4.19 fps	
X-Section Area:	52.87 sq ft		74.53 sq ft	
Hydraulic Radius:	2.228 ft		2.683 ft	
Froude Number:	0.67		0.43	
Roughness Coefficient:	0.0265		0.0423	

Structure #1 (Pond)

SB 001

Pond Inputs:

Initial Pool Elev:	378.00 ft
Initial Pool:	26.19 ac-ft

Emergency Spillway

Spillway Elev	Crest Length (ft)	Left Sideslope	Right Sideslope	Bottom Width (ft)
378.00	20.00	3.00:1	3.00:1	13.00

Pond Results:

Peak Elevation:	380.06 ft
Dewater Time:	0.79 days

Dewatering time is calculated from peak stage to lowest spillway

Elevation-Capacity-Discharge Table

Elevation	Area (ac)	Capacity (ac-ft)	Discharge (cfs)	Dewater Time (hrs)	
372.00	3.760	0.000	0.000		
373.00	3.955	3.857	0.000		
374.00	4.154	7.911	0.000		
375.00	4.358	12.167	0.000		
376.00	4.567	16.629	0.000		
377.00	4.781	21.303	0.000		
378.00	5.000	26.193	0.000		Spillway #1
379.00	5.200	31.293	33.646	16.45	
380.00	5.404	36.594	124.724	2.30	
380.06	5.417	36.914	133.322	0.20	Peak Stage
381.00	5.611	42.101	272.835		
382.00	5.823	47.818	480.743		
383.00	6.038	53.748	753.192		
384.00	6.257	59.895	1,094.864		
385.00	6.480	66.263	1,510.219		

Detailed Discharge Table

Elevation (ft)	Emergency Spillway (cfs)	Combined Total Discharge (cfs)
372.00	0.000	0.000
373.00	0.000	0.000
374.00	0.000	0.000
375.00	0.000	0.000
376.00	0.000	0.000
377.00	0.000	0.000
378.00	0.000	0.000
379.00	33.646	33.646
380.00	124.724	124.724
381.00	272.835	272.835
382.00	0.000	480.743
383.00	0.000	753.192
384.00	0.000	1,094.864
385.00	0.000	1,510.219

Structure #3 (Pond)

LCP-1

Pond Inputs:

Initial Pool Elev:	378.00 ft
Initial Pool:	0.00 ac-ft

Straight Pipe

Barrel Diameter (in)	Barrel Length (ft)	Barrel Slope (%)	Manning's n	Spillway Elev (ft)	Entrance Loss Coefficient	Tailwater Depth (ft)
60.00	120.00	0.10	0.0150	378.00	0.90	0.00

Straight Pipe

Barrel Diameter (in)	Barrel Length (ft)	Barrel Slope (%)	Manning's n	Spillway Elev (ft)	Entrance Loss Coefficient	Tailwater Depth (ft)
60.00	120.00	0.10	0.0150	378.00	0.90	0.00

Straight Pipe

Barrel Diameter (in)	Barrel Length (ft)	Barrel Slope (%)	Manning's n	Spillway Elev (ft)	Entrance Loss Coefficient	Tailwater Depth (ft)
60.00	120.00	0.10	0.0150	378.00	0.90	0.00

Straight Pipe

Barrel Diameter (in)	Barrel Length (ft)	Barrel Slope (%)	Manning's n	Spillway Elev (ft)	Entrance Loss Coefficient	Tailwater Depth (ft)
60.00	120.00	0.10	0.0150	378.00	0.90	0.00

Pond Results:

Peak Elevation:	383.11 ft
Dewater Time:	0.77 days

Dewatering time is calculated from peak stage to lowest spillway

Elevation-Capacity-Discharge Table

Elevation	Area (ac)	Capacity (ac-ft)	Discharge (cfs)	Dewater Time (hrs)
377.99	0.000	0.000	0.000	

Elevation	Area (ac)	Capacity (ac-ft)	Discharge (cfs)	Dewater Time (hrs)	
378.00	0.000	0.000	0.000		Spillway #1 Spillway #2 Spillway #3 Spillway #4
378.99	0.000	0.000	56.299	14.75	
379.99	0.000	0.000	137.998	1.75	
380.99	0.000	0.000	208.435	0.75	
381.99	0.000	0.000	287.285	0.35	
382.99	0.000	0.000	415.022	0.70	
383.11	0.000	0.001	430.266	0.15	Peak Stage
383.99	0.000	0.001	546.321		
384.99	0.000	0.001	675.837		
385.00	0.000	0.001	677.031		

Detailed Discharge Table

Elevation (ft)	Straight Pipe (cfs)	Straight Pipe (cfs)	Straight Pipe (cfs)	Straight Pipe (cfs)	Combined Total Discharge (cfs)
377.99	0.000	0.000	0.000	0.000	0.000
378.00	0.000	0.000	0.000	0.000	0.000
378.99	(1)>14.075	(1)>14.075	(1)>14.075	(1)>14.075	56.299
379.99	(1)>34.499	(1)>34.499	(1)>34.499	(1)>34.499	137.998
380.99	(1)>52.109	(1)>52.109	(1)>52.109	(1)>52.109	208.435
381.99	(1)>71.821	(1)>71.821	(1)>71.821	(1)>71.821	287.285
382.99	(1)>103.756	(1)>103.756	(1)>103.756	(1)>103.756	415.022
383.99	(3)>136.580	(3)>136.580	(3)>136.580	(3)>136.580	546.321
384.99	(6)>168.959	(6)>168.959	(6)>168.959	(6)>168.959	675.837
385.00	(6)>169.258	(6)>169.258	(6)>169.258	(6)>169.258	677.031

Subwatershed Hydrology Detail:

Stru #	SWS #	SWS Area (ac)	Time of Conc (hrs)	Musk K (hrs)	Musk X	Curve Number	UHS	Peak Discharge (cfs)	Runoff Volume (ac-ft)
#2	1	384.200	1.669	0.000	0.000	78.000	M	312.14	62.667
	Σ	**384.200**						**312.14**	**62.667**
#1	1	142.000	0.414	0.000	0.000	82.000	M	308.02	26.600
	Σ	**142.000**						**308.02**	**26.600**
#3	Σ	**526.200**						**430.48**	**89.269**

Subwatershed Time of Concentration Details:

Stru #	SWS #	Land Flow Condition	Slope (%)	Vert. Dist. (ft)	Horiz. Dist. (ft)	Velocity (fps)	Time (hrs)
#1	1	3. Short grass pasture	3.20	16.00	500.00	1.430	0.097
		8. Large gullies, diversions, and low flowing streams	1.29	50.00	3,881.00	3.400	0.317
#1	**1**	**Time of Concentration:**					**0.414**
#2	1	1. Forest with heavy ground litter	12.00	60.00	500.00	0.870	0.159
		8. Large gullies, diversions, and low flowing streams	0.44	48.00	10,820.00	1.990	1.510
#2	**1**	**Time of Concentration:**					**1.669**

LCP-1, LEVEE CULVERT PIPE
TYPICAL CONVEYANCE SECTION

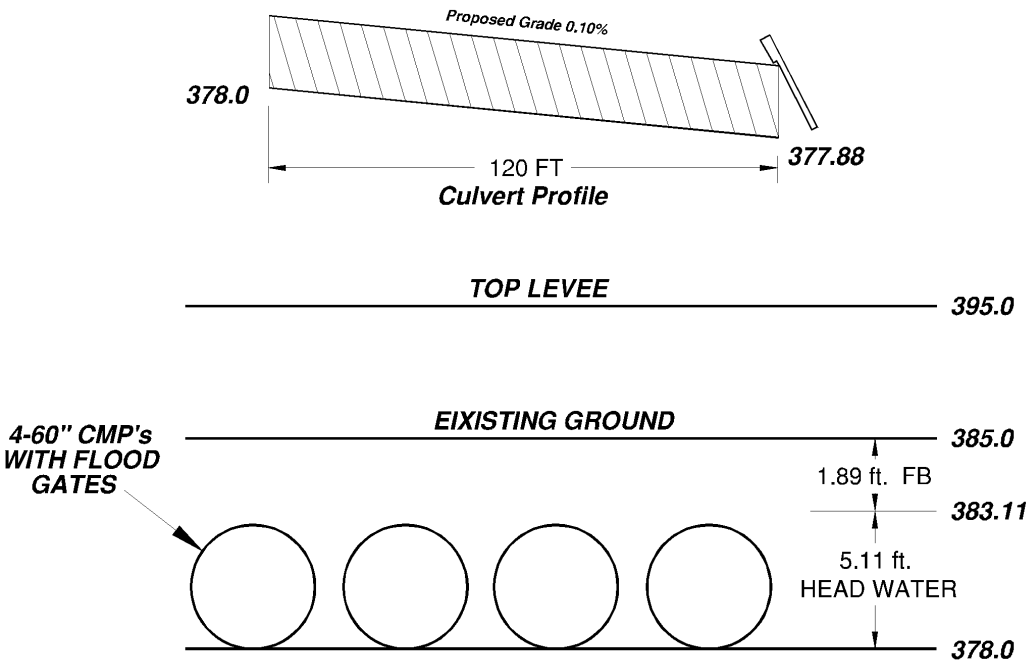

UMI LLC 566 Dickeyville Road, Lynnville IN	
LCP-1 LEVEE CULVERT PIPE Seven Hills Mine Permit S-357	
DATE: 8-24-2017	REVISION NO. DATE
ENGINEER:	
TECH:	
SCALE: not to scale	NOTES:
SHEET 1 OF 1	