HORIZON ENVIRONMENTAL

July 24, 2015

Mr. Andrew Drury
Air Quality Division – Permit Section
Michigan Department of Environmental Quality
Constitution Hall, 3rd Floor North
525 West Allegan Street
Lansing, MI 48933

RE: FOLLOW-UP DOCUMENTATION SUPPORTING PERMIT TO INSTALL APPLICATION NO. 118-15 COVERING THE TIER 3 FUELS PROJECT AT THE MARATHON PETROLEUM COMPANY LP REFINERY IN DETROIT, MICHIGAN (SRN: A9831)

Dear Mr. Drury,

On May 27, 2015, Marathon Petroleum Company LP ("MPC") submitted a Permit to Install application and supporting documentation covering the proposed Tier 3 Fuels Project at its refinery in Detroit, Michigan. On July 13, the Michigan Department of Environmental Quality, Air Quality Division ("AQD") requested that MPC provide additional clarification regarding its estimate of emissions and to submit updated dispersion modeling analyses, including a demonstration that nitrogen dioxide ("NO_2") and particulate matter ("PM_{10}") impacts due to the project will comply with applicable national ambient air quality standards.

Please find attached an updated version of the technical support document ("TSD") that was submitted as part of the Permit to Install application package. In addition to the information originally submitted in the application package, the TSD has been updated to include the emissions and dispersion modeling information requested by the AQD. This submittal is not a new Permit to Install application. Therefore, a newly signed Permit to Install application form is not being provided. The additionally requested dispersion modeling input and output files are being provided concurrent with this submittal via a secure web-based server.

If you have any questions regarding this submittal or require any additional information supporting the Permit to Install application, please do not hesitate to contact me at (616) 554-3210 or Jeff Bruestle of MPC at (313) 297-6068.

Sincerely,
HORIZON ENVIRONMENTAL CORPORATION

Brian Leahy

Brian E. Leahy
Senior Meteorologist

c: Jeffery L. Bruestle, P.E., MPC

Enclosure

4771-50th Street S.E., Suite One, Grand Rapids, MI 49512
Phone 616 554.3210 Fax 616 554.3211
www.horizonenv.com

HORIZON ENVIRONMENTAL

July 24, 2015

Air Quality Division – Permit Section
Michigan Department of Environmental Quality
Constitution Hall, 3rd Floor North
525 West Allegan Street
Lansing, MI 48933

RE: APPLICATION FOR A PERMIT TO INSTALL COVERING THE TIER 3 FUELS PROJECT AT THE MARATHON PETROLEUM COMPANY LP REFINERY IN DETROIT, MICHIGAN (SRN: A9831)

Dear Sir or Madam,

1. INTRODUCTION

Marathon Petroleum Company LP ("MPC") owns and operates a petroleum refinery at 1300 South Fort Street in the City of Detroit, Wayne County, Michigan (the "Detroit Refinery"). The Detroit Refinery produces gasoline, fuel oils, asphalt, propane, and propylene through the use of various hydrocarbon processing units. The Detroit Refinery currently operates under Renewable Operating Permit No. MI-ROP-A9831-2012b, last revised by Michigan Department of Environmental Quality, Air Quality Division ("AQD") on January 16, 2014 (the "ROP")[1]. The location of the Detroit Refinery is illustrated in **Figure 1**.

In March 2014, the U.S. EPA issued its Tier 3 Motor Vehicle Emissions and Fuel Standards. Starting in 2017, the Tier 3 program sets new standards for vehicle tailpipe and evaporative emissions and reduces the allowable sulfur content of gasoline. MPC proposes to install new equipment and to modify certain existing equipment at the Detroit Refinery in order to comply with the mandated lower gasoline sulfur requirement. These changes are referred to as the "Tier 3 Fuels Project".

The implementation of the Tier 3 Fuels Project will not result in an increase in daily or annual refining capacity at the Detroit Refinery. However, limited physical and operational changes necessary to implement the Tier 3 Fuels Project and to achieve the mandated reduction in

[1] Process units covered under this Permit to Install application also operate under Permit to Install No. 63-08D. On October 30, 2014, MPC submitted an Administrative Amendment request to incorporate Permit to Install No. 63-08D into the ROP.

4771-50th Street S.E., Suite One, Grand Rapids, MI 49512
Phone 616 554.3210 Fax 616 554.3211
www.horizonenv.com

gasoline sulfur levels will result in a project emissions increase of regulated new source review ("NSR") pollutants (less than the significant emission rate thresholds) as well as a nominal increase in potential toxic air contaminant ("TAC") emissions. Therefore, pursuant to Rule 201 of Michigan's Administrative Rules for Air Pollution Control (PA 451 of 1994, as amended), an Air Use Permit to Install must be issued by the AQD prior to the commencement of construction of the proposed changes. This document and attached application form constitute the required Permit to Install application package covering the Tier 3 Fuels Project.

Information required pursuant to Rule 203, along with analyses demonstrating compliance with all relevant State of Michigan and federal air quality requirements is presented in this submittal. A description of the overall project, including an estimate of regulated NSR pollutants is provided in **Section 2**. Relevant federal air regulations are described in **Section 3**, while relevant State of Michigan air regulations are discussed in **Section 4**. Compliance with the air impact requirements of Michigan's air toxics provisions (Rules 225 through 229) is demonstrated in **Section 5**.

2. PROJECT DESCRIPTION AND ESTIMATED EMISSIONS

Background

Sulfur is a naturally occurring component of crude oil and gasoline. Prior to the implementation of controls, typical gasoline sulfur levels were in the range of 300 ppmw. U.S. EPA actions to reduce gasoline sulfur began in 2000 under their Tier 2 program. For most refiners, including the Detroit Refinery, Tier 2 compliance with a corporate annual average limit of 30 ppmw sulfur and an 80 ppmw per gallon sulfur cap began in 2006. The Tier 2 program included sulfur credit averaging, as well as banking and trading provisions that provided some flexibility in meeting the 2006 compliance deadline.

Under the new Tier 3 program, refiners must meet a corporate annual average sulfur limit of 10 ppmw by January 1, 2017. The 80 ppmw per gallon sulfur cap also remains in effect. The Tier 3 rules also contain provisions for averaging, banking and trading sulfur credits, including the ability to carry over banked credits from Tier 2.

The primary refinery source of sulfur in gasoline is the naphtha produced by the Fluid Catalytic Cracking Unit ("FCCU"). To comply with Tier 2 requirements at the Detroit Refinery, MPC installed a Gasoil Hydrotreater ("GOHT") in 2005. The GOHT removes sulfur from the gasoil feed to the FCCU, resulting in lower levels of sulfur in the FCCU naphtha and distillate products.

The GOHT was subsequently modified during the recently completed Detroit Heavy Oil Upgrade Project ("DHOUP") to process the high-sulfur gasoil produced by the new Coker Unit.

Currently, the GOHT has a nominal capacity of 44,500 barrels per day. It processes gasoil feedstocks containing approximately 2.84 weight percent sulfur and produces a gasoil product containing approximately 0.12% sulfur by weight (1200 ppmw). This generates a sulfur load of 180 long tons per day which is subsequently processed in the Detroit Refinery Sulfur Recovery Units ("SRUs").

Physical and Operational Changes Associated with the Tier 3 Fuels Project

In order to meet the federally-mandated Tier 3 gasoline sulfur requirements, MPC proposes to upgrade the GOHT by installing a second reactor vessel, a second charge heater, and modifying existing valves, pumps, piping, heat exchangers, and related equipment associated with the process. The new charge heater will have a maximum rated heat input capacity of 115 million BTUs per hour (daily basis) and 85 million BTUs per hour (annual basis), and will have the capability to combust natural gas or refinery fuel gas. These changes are shown in the attached System Sketch and Plot Plan (**Attachment B**).

While the proposed changes are designed to allow for a further reduction in sulfur levels, they will not provide greater capacity to the GOHT. Rather, the installation of a second reactor and charge heater train will allow for continued operation of the GOHT while the other reactor is taken off-line to change catalyst.

The modified unit will continue to have a nominal capacity of 44,500 barrels per day, but will now be capable of producing a gasoil product with a sulfur content of only 0.03% by weight (300 ppmw). As shown below, this will generate a sulfur load of 186 long tons per day, which is a 6 long tons per day increase above current capacity:

GOHT Feed Sulfur Content:	2.84 wt.% (28,400 ppmw)
GOHT Product Sulfur Content (current):	0.12 wt.% (1,200 ppmw)
GOHT Product Sulfur Content (future):	0.03 wt.% (300 ppmw)

$$\text{Current SRU Load} \square \frac{44{,}500\ \text{bbl}}{\text{day}} * \frac{42\ \text{gal}}{\text{bbl}} * \frac{8.34\ \text{lb}}{\text{gal}} * 0.951\ \text{s.g.} * 2.72\ \text{wt.\% S}$$

$$\square \frac{403{,}204\ \text{lb/day}}{2{,}240\ \text{lb/long ton}}$$

$$\square\ 180\ \text{long ton/day}$$

$$\text{Future SRU Load} \square \frac{44{,}500\ \text{bbl}}{\text{day}} * \frac{42\ \text{gal}}{\text{bbl}} * \frac{8.34\ \text{lb}}{\text{gal}} * 0.951\ \text{s.g.} * 2.81\ \text{wt.\% S}$$

$$\square \frac{416{,}545\ \text{lb/day}}{2{,}240\ \text{lb/long ton}}$$

$$\square\ 186\ \text{long ton/day}$$

Additional emission units potentially affected by the Tier 3 Fuels Project include:

- SRUs, Amine Unit and Sour Water Stripper – The additional 6 long tons per day produced in the GOHT will be processed in the Detroit Refinery SRUs, amine units and sour water strippers ("SWSs"). This will increase steam consumption in the amine and SWS units.

- Hydrogen Plant Heater – As part of the sulfur removal process, the existing GOHT consumes up to 35.2 million standard cubic feet of hydrogen per day. In order to meet the lower sulfur gasoline requirement, an additional 9.56 million standard cubic feet of hydrogen per day will be fed to the GOHT. This is expected to require a 94 million BTU per hour increase in the Hydrogen Plant Heater firing duty.

- Utilities/Boilers – The Hydrogen Plant heater is equipped with a waste heat recovery system. Therefore, the aforementioned increase in the utilization of the Hydrogen Plant will result in an increase in steam generation. The additional steam will more than offset the increased steam demand at the amine and SWS units. It will also require less steam generation from the existing boilers. However, credit for any reduction in emissions that may occur as a result of reduced boiler utilization is not being taken in this application.

Because the Tier 3 Fuels Project will not increase throughput to the GOHT unit, storage tank emissions will be unaffected by the change. Further, except for the emission units noted above, the proposed change will not increase the capacity of or throughput to refinery process units located upstream or downstream of the GOHT. The lower sulfur gasoil that will be fed to the FCCU will actually reduce sulfur dioxide ("SO_2") emissions from the FCCU Regenerator and will also result in lower sulfur levels in the FCCU distillate fed to the Distillate Hydrotreater ("DHT"). Also, with the installation of a new GOHT Charge Heater, the projected utilization of the existing GOHT Charge Heater will decrease. However, no credit for the aforementioned emission reductions is being taken in this application.

Construction/modification of the aforementioned equipment is expected to commence in the first quarter of 2016 and is scheduled for completion by the end of the 2018 plant wide shut down.

Estimate of Regulated NSR Pollutant Emissions

The Tier 3 Fuels Project will require physical or operational changes to existing emission units (GOHT, SRUs, and Hydrogen Plant) as well as the installation of one new emission unit (GOHT Charge Heater). Because the proposed modification involves both changes to existing emission units and the installation of a new emission unit, Rule 336.2802(4)(e) specifies that the project emissions change may be evaluated using the "hybrid" test to determine whether the proposed modification results in a significant emissions increase of a regulated NSR pollutant for which the area is designated in attainment with the national ambient air quality standards ("NAAQS"). Rule 336.2902(2)(e) allows for the hybrid approach when evaluating emissions of a regulated NSR pollutant for which the area is designated nonattainment. The hybrid test involves both the "actual-to-projected actual" test (for changes to existing emission units) and the "potential to emit" test (for new emission units).

Accordingly, estimating project emissions included the following steps:

- Calculation of baseline emissions for the existing emission units affected by the project;
- Projection of future actual emission rates for the existing emission units affected by the project;
- Exclusion of emissions that existing emission units could have accommodated during the baseline period <u>and</u> that are unrelated to the project; and
- Calculation of potential emissions from new emission units associated with the project.

Baseline Emissions

Baseline actual emissions for emission units affected by the Tier 3 Fuels Project were calculated following the methodology stipulated in Rule 1801(b)(ii) and, for sulfur dioxide, Rule 1901(b)(ii). Except for fugitive emissions of volatile organic compounds ("VOCs"), hydrogen sulfide ("H_2S") and total reduced sulfur compounds ("TRS"), which are described in a following section, actual emissions for the 24-month baseline period are based on the results of stack testing or data collected from continuous emission monitors ("CEMS") during calendar years 2013 and 2014. Baseline actual emissions are shown on a pollutant-specific basis in the attached emissions summary tables (**Table 1** through **Table 8**). Because the estimation procedure must satisfy requirements of Rule 1801(b)(ii)(B), the baseline actual emissions presented in the tables are equal to or less than those submitted to the Michigan Annual Emission Reporting System ("MAERS") for the years 2013 and 2014.

Projected Actual Emissions

Post-project projected actual emissions and the basis for the calculations are also shown in the attached emissions summary tables. In most cases, emissions were conservatively calculated using the maximum monthly production rate actually achieved in calendar year 2014, applying that rate on an annual basis, and adding the project-related increases. Actual monthly production rates for 2014 are summarized in **Table 9**.

Excluded Emissions

When using the actual-to-projected-actual applicability test, emissions increases that are unrelated to the project can be excluded if those emissions could have been accommodated by the existing emission unit during the baseline period. This would include increased utilization of the emission unit due to product demand growth.

Excluded emissions for the project are also shown the attached emissions summary tables. In most cases, excluded emissions due to product demand growth and that are unrelated to the project have been calculated using the maximum monthly production rate actually achieved during 2014 and applying that rate on an annual basis.

Potential Emissions

When considering new emission units associated with a project, the potential to emit of the new emission unit at its maximum capacity must be considered. The proposed new GOHT Charge

Heater will have a maximum firing duty of 115 million BTU per hour (daily basis) and 85 million BTUs per hour (annual basis), and will have the capacity to combust natural gas or refinery fuel gas. With the exception of oxides of nitrogen ("NO_x"), which is subject to a more stringent emission limitation under 40 CFR Part 60 Subpart Ja[2], emission factors for the proposed GOHT Charge Heater are consistent with the pound per million BTU emission limits stipulated for the existing GOHT Charge Heater in the flexible group FGHEATERS-S1, Permit to Install No. 63-08D. Potential emissions, based on the maximum annual firing duty of the proposed new GOHT Charge Heater and the applicable emission factor, are summarized in **Table 10**.

Fugitive Emissions of VOC, H_2S and TRS Compounds

Physical changes to the GOHT unit will increase the number of process components (e.g., valves, flanges, and drains) that have the potential to leak. MPC has implemented a comprehensive leak detection and repair ("LDAR") program and uses an electronic database to store component information and monitoring data. Utilizing component count information from the database, baseline actual emissions due to leaking components from the GOHT unit have been estimated using emission factors based on protocols developed by the U.S. EPA and the American Petroleum Institute ("API").

Reduced sulfur compounds other than H_2S are not expected to be present in appreciable amounts in the new and modified emission units. Therefore, emissions of total reduced sulfur ("TRS") compounds are equal to the emissions of H_2S.

Projected fugitive emissions of VOC and H_2S have been estimated based on the sum of the current and projected component count after the project. Conditions of PTI 63-08D require that 50% of the GOHT flanges and connectors in gas/vapor and light liquid service be monitored for leaks. The post-project emissions estimate assumes that the connector monitoring requirement will be applied to 90% of the GOHT flanges and connectors in gas/vapor and light liquid service. Emission factors, baseline and projected component counts, and light liquid/gas, heavy liquid, and drain emissions of VOCs from the GOHT are provided in **Table 11**. Emission factors, baseline component counts, and light liquid/gas emissions of H_2S from the GOHT are provided in **Table 12** while emission factors, projected component counts, and light liquid/gas emissions of H_2S from the GOHT are provided in **Table 13**. Baseline actual and projected actual fugitive VOC and H_2S emissions were included in the hybrid test calculations.

[2] §60.102a(g)(2)(i)(B).

Though the Tier 3 Fuels Project includes a projected increase in components in VOC and/or H2S service at the GOHT, the enhanced LDAR monitoring program will result in a reduction in fugitive emissions. .

Emissions Summary

Following the hybrid test, the emissions changes associated with the Tier 3 Fuels Project are detailed in the attached emissions summary tables and are summarized in the following table.

	NO_x	SO_2	CO	VOC	PM	$PM_{10}/PM_{2.5}$	H_2S	H_2SO_4
Emissions Increase (Existing Emission Units)	2.70	1.57	0.29	-0.27	1.09	2.14	-0.15	0.32
Emissions Increase (New Emission Unit)	14.89	3.91	7.45	2.05	0.71	2.83	0	0.30
Tier 3 Project Increase	17.59	5.48	7.74	1.78	1.80	4.97	-0.15	0.62
Significance Level	40	40	100	40	25	15/10	10	10

The project emissions change is well under the Prevention of Significant Deterioration ("PSD") and nonattainment NSR significant emission rate thresholds.

3. Relevant Federal Air Regulations

The Detroit Refinery is located at 1300 South Fort Street in the City of Detroit, Wayne County, Michigan, in an area currently designated attainment with the NAAQS for all regulated NSR pollutants except for the 1-hour SO_2 Standard. Federal air regulations relevant to the Tier 3 Fuels Project are summarized below.

40 CFR Part 60, Subpart Ja – Standards of Performance for Petroleum Refineries for Which Construction, Reconstruction or Modification Commenced after May 14, 2007

On June 24, 2008, the U.S. EPA promulgated new standards of performance for certain petroleum refinery emission units constructed, reconstructed or modified after May 14, 2007. The applicability of Subpart Ja to emission units associated with the Tier 3 Fuels Project is summarized below.

Sulfur Recovery Units

The two SRUs currently operating at the Detroit Refinery (EG72-SULRBLOCK2 and EG42-43SULRECOV) are subject to Subpart Ja requirements for SO_2. EG72-SULRBLOCK2 was constructed after May 14, 2007, while EG42-43SULRECOV was modified after May 14, 2007. Both units use an oxidation control system followed by incineration, and are equipped with CEMS to monitor SO_2 emissions to the atmosphere. Applicable Subpart Ja requirements, including SO_2 emission limits, as well as monitoring and recordkeeping obligations, have already been incorporated into Permit to Install No. 63-08D. These requirements will remain applicable to the two SRUs after implementation of the Tier 3 Fuels Project.

GOHT Charge Heaters

The existing GOHT Charge Heater was constructed in 2005, but has not been reconstructed or modified since the Subpart Ja applicability date. The existing heater will not be reconstructed or modified as part of the Tier 3 Fuels Project. Therefore, the requirements of Subpart Ja remain not applicable to the existing GOHT Charge Heater.

Because it will be a new process heater, the proposed new GOHT Charge Heater is subject to Subpart Ja requirements, which include a fuel gas sulfur content limit, NO_x emission limits, continuous emission monitoring for NO_x and for H_2S in refinery fuel gas, and recordkeeping obligations.

Hydrogen Plant Heater

The existing Hydrogen Plant Heater was installed after May 14, 2007. Applicable Subpart Ja requirements, including fuel gas sulfur content limit, NO_x emission limits, continuous emission monitoring for NO_x and for H_2S in refinery fuel gas, and recordkeeping obligations have already been incorporated into Permit to Install No. 63-08D.

40 CFR Part 60, Subpart GGGa – Standards of Performance for equipment Leaks of VOC in Petroleum Refineries for Which Construction, Reconstruction, or Modification Commenced After November 7, 2006

On November 16, 2007, the U.S. EPA promulgated new standards of performance for equipment at petroleum refineries that are in VOC service (e.g., valves, flanges, pumps, and connectors). The GOHT unit was modified in 2012 and is, therefore, currently subject to Subpart GGGa requirements which have been incorporated into the Detroit Refinery's LDAR program. As part

of the Tier 3 Fuels Project, additional components in VOC service will be installed on the GOHT unit. These components will be subject to Subpart GGGa requirements and will be added to the LDAR program.

40 CFR Part 63, Subpart DDDDD – National Emission Standards for Hazardous Air Pollutants for Major Sources: Industrial, Commercial, and Institutional Boilers and Process Heaters

On January 31, 2013, the U.S. EPA promulgated 40 CFR Part 63, Subpart DDDDD -National Emission Standards for Hazardous Air Pollutants for Industrial, Commercial, and Institutional Boilers and Process Heaters. These rules are generally referred to as the "Heater/Boiler MACT".

Boilers and process heaters at the Detroit Refinery are regulated under the "Heater/Boiler MACT", including the existing and proposed GOHT heaters. Requirements include:

- A one-time energy assessment that must be completed by a Qualified Energy Assessor.
- Tune-ups are required on a frequency dictated by the design and rated firing capacity of the unit.

Applicable Heater/Boiler MACT requirements for existing emission units have been incorporated into PTI 63-08D. The new GOHT heater will also be subject to these requirements.

4. Relevant State of Michigan Air Regulations

Michigan's Administrative Rules for Air Pollution Control set forth requirements for new or modified sources of air pollution. Applicable Michigan air quality requirements are summarized below.

Rule 201 (Permits to Install)

Rule 201 states, *"A person shall not install, construct, reconstruct, relocate, alter, or modify any process or process equipment, including the control equipment pertaining thereto, which may emit an air contaminant, unless a permit to install which authorizes such action is issued by the department."* The Tier 3 Fuels Project will have the potential to emit an air contaminant. Therefore, the project is subject to the Permit to Install requirement. In accordance with Rule

203 (*Information Required*), MPC has submitted a Permit to Install application form and supporting documentation for the proposed changes.

Rules 224 - 232 (Michigan's Air Toxics Rules)

An emission unit is subject to the Michigan Air Toxics Rules if all of the following criteria are met:

- The emission unit is either new or modified (physically changed or change in the method of operation and experiences an increase in emissions beyond levels already allowed by permit); and
- The emission unit emits a TAC; and
- The emission unit is required by Part 2 of the Michigan Air Rules to submit a Permit to Install application.

The proposed new GOHT Charge Heater is a new emission unit that has the potential to emit a TAC and for which a Permit to Install is required. Therefore, the proposed new GOHT Charge Heater is subject to the T-BACT and screening level requirement of Michigan's Air Toxics Rules.

In support of Permit to Install No. 63-08D, potential TAC emissions associated with the Hydrogen Plant Heater were based on a maximum daily firing duty of 950 MMBtu/hr. The allowable maximum daily firing duty will not increase as part of the Tier 3 Fuels Project. Also in support of Permit to Install No. 63-08D, potential TAC emissions associated with the SRUs were based on the number of components and fugitive leak rate of the equipment. Since physical changes to the SRUs are not occurring as part of the Tier 3 Fuels Project (i.e., there will be no increase in fugitive components), there will be no increase in TAC emissions. Though new fugitive components are being added to the existing GOHT unit, the proposed increase in monitoring frequency results in potential TAC emissions lower than what had previously been estimated in support of Permit to Install No. 63-08D.

In summary, the following emission units associated with the Tier 3 Fuels Project are not subject to the T-BACT or screening level requirements for the reasons stated:

- GOHT Charge Heater (existing) – Not modified, decrease in projected firing duty, no increase in emissions.

- GOHT Process Unit – Physically changed, but no increase in emissions due to enhanced component monitoring.
- SRUs, Amine Unit and Sour Water Stripper – No physical change, change in the method of operation, increased sulfur recovery remains within existing permit limits, no increase in emissions beyond current permit limits.
- Hydrogen Plant – No physical change, change in the method of operation, but no increase in emissions beyond current permit limits.

T-BACT

Rule 224 stipulates that a new or modified source subject to Rule 201 permitting requirements (i.e. any source permitted after April 17, 1992) and that emits a TAC shall not be allowed to emit the TAC in excess of *"the maximum allowable emission rate based on the application of best available control technology for toxics ("T-BACT"), except as provided in subrule (2) of this rule"*. Rule 102 defines T-BACT as *"the maximum degree of emission reduction which the commission determines is reasonably achievable for each process that emits toxic air contaminants, taking into account energy, environmental, and economic impacts and other costs."*

The proposed new GOHT Charge Heater is regulated under the Boiler/Heater MACT. Pursuant to Rule 224(2)(a), emission units covered under a MACT standard are exempt from T-BACT requirements.

Screening Level Requirement

Rule 225(1) stipulates that a new or modified source shall not be allowed to emit any TAC in excess of *"the maximum allowable emission rate which results in a predicted maximum ambient impact that is more than the initial threshold screening level or the initial risk screening level, or, both..."*.

The proposed new GOHT Charge Heater will combust natural gas or refinery fuel gas and will, therefore, have the potential to emit TACs. Air dispersion modeling analyses demonstrating that potential emissions from the proposed new GOHT Charge Heater will result in ambient impacts below applicable initial threshold screening levels ("ITSLs") and initial risk screening level ("IRSLs") have been conducted and are detailed in **Section 5**. Compliance with applicable screening levels has previously been demonstrated for those emission units that are unchanged due to the project.

Rule 702 (New Sources of VOCs)

Rule 702 states that the owner or operator of a new source of VOC emissions shall not allow the emission of VOC from the new source in excess of the lowest maximum allowable emission rate of the following:

- Rule 702(a) – An emission rate as listed by the commission or based upon the application of the best available control technology.
- Rule 702(b) – An emission rate as specified by a new source performance standard.
- Rule 702(c) – An emission rate specified as a condition of a permit to install or a permit to operate.
- Rule 702(d) – An emission rate specified in Part 6 of the Rules.

The new components in VOC service (valves, flanges, and drains) that will be added to the GOHT unit are regulated under a new source performance standard (Subpart GGGa). In compliance with Subpart GGGa, the new components will be added to the Detroit Refinery's comprehensive LDAR program. Therefore, the GOHT unit satisfies Rule 702(b).

The proposed GOHT Process Heater is regulated under a new source performance standard (Subpart Ja). However, there are no VOC requirements under Subpart Ja that apply to the heater. Further, there are no applicable VOC emission limits specified in the Part 6 Rules. Operating process heaters by following good combustion practices are routinely considered as BACT by the AQD, including previous determinations for process heaters operating at the Detroit Refinery. Accordingly, the Detroit Refinery will comply with Rule 702(a) through the use of good combustion practices.

Rules 1801 – 1818 (Prevention of Significant Deterioration)

Pursuant to Rule 1801(cc)(i)(K), the Detroit Refinery is currently classified as an existing major stationary source under the PSD regulations. Described in **Section 2** of this submittal, the emissions changes associated with the Tier 3 Fuels Project have been estimated following the hybrid test and are summarized in the attached emissions summary tables. As shown in the tables, the project emissions increase associated with the Tier 3 Fuels Project is less than the PSD significant emission rate threshold for all regulated NSR pollutants. Therefore, the project is classified as a minor modification to an existing major stationary source and is not subject to the requirements of PSD review.

Pursuant to Rule 1818(3)(f), there is a reasonable possibility that a project that is not part of a major modification may result in a significant emissions increase when either:

1. A projected actual emissions increase of at least 50 percent of the significant emission rate threshold occurs; or
2. A projected actual emissions increase that, when added to the amount of emissions that are unrelated to the project and are, therefore, excludable, sums to at least 50 percent of the amount that is a significant emissions increase occurs.

As shown in the emissions summary tables, the projected actual emissions increase associated with the Tier 3 Fuels Project is less than 50 percent of the significant emission rate thresholds. Therefore, the post-project recordkeeping requirements of Rule 1818(3)(b) through (e) do not apply to the project.

Where the projected actual emissions increase from existing emission units, when added to the amount of excludable emissions that are unrelated to the project, are greater than 50 percent of the significant emission rate thresholds, the recordkeeping requirements of Rule 1818(3)(f)(ii) apply, requiring documentation and maintenance of the following information prior to beginning actual construction of the project:

- A description of the project;
- Identification of the emission units whose emissions of a regulated NSR pollutant may be affected by the project; and
- A description of the applicability test used to determine that the project is not a major modification for any regulated NSR pollutant, including baseline actual emissions, the project actual emissions, the amount of emissions excluded under Rule 1801(11)(ii)(C), and an explanation for why such amount was excluded.

The project description and emissions information provided in this submittal satisfies the requirements of Rule 1818(3)(f)(ii).

Rules 1901 – 1908 (New Source Review for Major Sources Impacting Nonattainment Areas)

The portion of Wayne County that includes the Detroit Refinery is currently designated as not attaining the 1-hour SO_2 NAAQS. Pursuant to Rule 1901(s)(i)(A), the Tier 3 Fuels Project would constitute a major modification and would be subject to nonattainment NSR if the project emissions increase of SO_2 exceeds the significant emission rate threshold. As shown **Table 2**,

the project emissions increase of SO_2 is well under the significant emission rate threshold. Therefore, the Tier 3 Fuels Project is not subject to nonattainment NSR.

Pursuant to Rule 1902(6)(f), there is a reasonable possibility that a project may result in a significant emissions increase when any increase in emissions under the actual to projected actual test occurs from existing emission units not exempt from the Permit to Install requirement. Consistent with the previous section, Rule 1902(6)(a) specifies that the following records for existing emission units affected by the project will be documented and maintained prior to beginning actual construction of the project:

- A description of the project;
- Identification of the emission units whose emissions of a regulated NSR pollutant may be affected by the project; and
- A description of the applicability test used to determine that the project is not a major modification for any regulated NSR pollutant, including baseline actual emissions, the project actual emissions, the amount of emissions excluded under Rule 1801(11)(ii)(C), and an explanation for why such amount was excluded.

The project description and emissions information provided in this submittal satisfies the requirements of Rule 1902(6)(a).

Pursuant to Rule 1902(6)(c), MPC is also required to monitor SO_2 emissions from the existing emission units associated with the project and to calculate and maintain a record of the annual emissions, in tons per year on a calendar basis for a period of five years following resumption of regular operations after the change, or for a period of ten years following resumption of regular operations after the change if the project increases the design capacity or potential to emit of the nonattainment pollutant at the emissions unit. None of the existing emission units affected by the Tier 3 Fuels Project will experience an increase in design capacity nor SO_2 potential to emit. Therefore, the recordkeeping requirement of Rule 1902(6)(c) is limited to five years following resumption of regular operations after the change.

As part of the recordkeeping requirement, Rule 1902(6)(e) requires the submittal of a report if annual emissions from the project exceed baseline actual emissions by a significant amount and if such emissions differ from the preconstruction projection. The report must be submitted within 60 days after the end of the year in which the significant increase occurs. For the five year period, MPC proposes to track project emissions using the following template:

Tier 3 Fuels Project	SO_2
Actual emissions from Tier 3 Fuels Units.(1)	
Baseline emissions from Tier 3 Fuels Units.	57.53
Emissions increase from Tier 3 Fuels Units. (Actual emissions minus baseline emissions.)	
Preconstruction Projection for Tier 3 Fuels Units.	79.47

(1) Includes the GOHT Charge Heaters (New and Existing), Hydrogen Plant Heater, and the Sulfur Recovery Units (Units 42 and 72).

If emissions from the Tier 3 Fuels Units exceed baseline actual emissions by more than 40 tons/year, MPC will submit a report containing:

- Name, address and telephone number.
- The annual emissions as calculated using the actual-to-projected-actual applicability test.
- Other information, including an explanation as to why the emissions differ from the preconstruction projection. Such explanation may include a discussion of emission increases that may be excluded from the project increase calculation. Excludable emission may include (but are not limited to) emissions associated with product demand growth and/or other increases not associated with the Tier 3 Fuels Project.

Michigan's Modeling Guidance for Regulated NSR Pollutants

On March 3, 2015, the AQD published revised guidance for determining whether air dispersion modeling of regulated NSR pollutants must be conducted in support of a Permit to Install application. Pursuant to the guidance, modifications to existing major stationary sources where the "project emissions" are less than applicable significant emission rate thresholds ("SERs") must confirm that the modification will not cause a violation of an applicable PSD increment or NAAQS. Project emissions are defined under the modeling guidance as the emissions increase prior to taking into account any decreases (i.e., excludable increases or decreases). The applicant can comply with this requirement by meeting applicable emission rate and stack/building configuration criteria in Tables 1 through 3 of the guidance. If unable to meet the Table 1 through 3 criteria, the applicant must submit a demonstration of compliance with the applicable PSD increments and NAAQS. The applicant may conduct air dispersion modeling to meet the demonstration requirement or, alternatively, submit for AQD consideration a qualitative assessment specifying why dispersion modeling is unnecessary to demonstrate compliance.

Project Emissions

The Tier 3 Fuels Project is classified under the modeling guidance as a "Minor SER Modification at an Existing Major PSD Source". Moreover, none of the existing emission units affected by the project will have post-project emissions of a regulated NSR pollutant above what's already allowed under permit. For purposes of assessing compliance requirements under the modeling guidance, emissions from the Tier 3 Fuels Project were evaluated using the potential emissions increase associated with existing emissions units, not taking credit for emissions increases unrelated to the project (i.e., excludable emissions), in conjunction with the potential increase from the new emission unit, as shown below:

	NO_x	SO_2	CO	PM_{10}	$PM_{2.5}$
Potential Increase (1) (Existing Emission Units)	6.95	18.17	1.28	4.33	4.33
Potential Increase (2) (New Emission Unit)	14.89	3.91	7.45	2.83	2.83
Tier 3 Fuels Project Increase	21.84	22.08	8.73	7.16	7.16
Significance Level	40	40	100	15	10

(1) The potential increase calculation for existing emission units is detailed in **Tables 1** through **8**. No credit has been taken for the excludable portion of the potential increases.
(2) The potential increase calculation for the new GOHT Charge Heater is detailed in **Table 10**.

As shown above, project emissions of NO_x, SO_2, and $PM_{2.5}$ are each greater than 50 percent of their respective SERs, while project emissions of PM_{10} are between 25 percent and 50 percent of its respective SER. Pursuant to Table 1 of the guidance, a demonstration of compliance with the applicable PSD increments and NAAQS is required for those NO_x and/or SO_2-emitting units associated with the project that do not meet the following stack design criteria:

Orientation: Vertically unobstructed;
Minimum Height: 60 feet and 1.5 times the building height; or
30 feet if there is no building downwash.

A demonstration of compliance with the applicable PSD increments and NAAQS is required for those PM_{10}-emitting units associated with the project that do not meet the following stack design criteria:

Orientation:	Vertically unobstructed;
Minimum Height:	40 feet and 1.5 times the building height; or 20 feet if there is no building downwash.

The height and orientation of the four stacks with emissions affected by the project are presented in **Table 14**, while location and exhaust parameters for the four stacks are summarized in **Table 15.** As shown in the table, the proposed new GOHT Charge Heater stack and existing Hydrogen Plant Heater stack do not directly meet the applicable height/building criteria in Table 1 of the modeling guidance. The proposed new GOHT Charge Heater stack will vent vertically unobstructed and will be built to a height of 170 feet; the Hydrogen Plant Heater stack vents vertically unobstructed at a height of 150 feet. As projected by the BPIP-PRIME program, the proposed new GOHT Charge Heater stack is slightly less than 1.5 times the height of an influencing structure for 12 of the 36 primary wind directions; the Hydrogen Plant Heater stack is less than 1.5 times the height of an influencing structure for 3 of the 36 primary wind directions.

Model simulations of the proposed new GOHT Charge Heater stack and Hydrogen Plant Heater stack at their design heights in relation to the applicable minimum design criteria set forth in Table 1 of the modeling guidance have been conducted at a hypothetical unit emission rate. Also shown in **Table 14**, the unit emission rate simulations demonstrate that each of the stacks will result in substantially lower modeled impacts than would a stack that directly meets the height/building design criteria in Table 1 of the modeling guidance. Therefore, a demonstration of compliance is not directly mandated for NO_x, SO_2, and PM_{10} since all of the project stacks meet the Table 1 design criteria either directly or on an equivalent basis.

Pursuant to Table 2 of the modeling guidance, no further demonstration of compliance for CO is required since project emissions are less than 100 percent of the SER. Pursuant to Table 3 of the modeling guidance, a demonstration is required for $PM_{2.5}$ since project emissions are between 100 percent and 50 percent of the SER and the emission units will not combust natural gas exclusively.

Demonstration

As described above, a demonstration is not directly mandated under Table 1 of the modeling guidance for NO_x, SO_2, and PM_{10}. However, pursuant to the "Exceptions to the Policy" section of the modeling guidance, the AQD has asked MPC to conduct a demonstration for NO_x and PM_{10}. A demonstration is directly mandated under Table 3 of the modeling guidance for $PM_{2.5}$.

While there are compelling qualitative reasons to conclude that the project will not adversely impact nitrogen dioxide ("NO_2"), PM_{10}, or $PM_{2.5}$ air quality – height of the stacks, distance between emission sources, limited downwash – dispersion model simulations have been conducted to quantitatively demonstrate that the project will have an air quality impact less than the NO_2, PM_{10}, and $PM_{2.5}$ significant impact levels ("SILs"). The modeling analyses were conducted following applicable U.S. EPA and AQD guidance and using a dispersion model, modeling preprocessors, and databases described in the air toxics modeling section.

Modeled PM_{10} and $PM_{2.5}$ emission rates and resultant predicted impacts are summarized in **Table 16**. Modeled PM_{10} and $PM_{2.5}$ impacts will be identical because the project emissions increase for both pollutants is identical. As shown in the table, maximum predicted PM_{10} impacts due to the project are less than 5 percent of the 24-hour and annual SILs, while $PM_{2.5}$ impacts due to the project are less than 20 percent of the 24-hour and annual SILs.

Modeled NO_x emission rates and resultant predicted NO_2 impacts are summarized in **Table 17**. Transformation of NO_x to NO_2 during plume transport was assessed using the Ambient Ratio Method default factor of 0.8. As shown in the table, maximum predicted NO_2 impacts due to the project are less than 35 percent of the 1-hour SIL and less than 7 percent of the annual SIL.

5. COMPLIANCE WITH THE AIR TOXICS SCREENING LEVEL REQUIREMENT

Rule 225 requires a demonstration that potential TAC emissions due to a new or modified source subject to the requirement to obtain a PTI will not exceed applicable health-based screening levels. Ambient air quality dispersion modeling analyses have been conducted in support of the Rule 225 requirement and demonstrate that the proposed new GOHT Charge Heater will not threaten the applicable health-based screening levels.

The modeling analyses described in this section were conducted utilizing databases and following a methodology consistent with previous AQD-approved Rule 225 demonstrations for the Detroit Refinery. The following sections summarize the dispersion modeling methodology, the dispersion

model employed in the analysis, site area characteristics, modeling databases developed in support of the analysis, and the results of the air quality impact analysis. Dispersion modeling input and output files are being submitted to the AQD via web-based server concurrent with this submittal.

Modeling Methodology

The only new emission unit associated with the Tier 3 Fuels Project is the proposed new GOHT Charge Heater. As described in **Section 3**, changes in the method of operation of other emission units affected by the project (e.g., Hydrogen Plant and SRUs), as well as physical changes to the GOHT unit (installation of a new reactor and additional components), will not result in the emission of a TAC higher than what has previously been permitted and modeled in compliance with Rule 225. Therefore, because TAC emission associated with existing emission units affected by the Tier 3 Fuels Project will not increase beyond what was previously estimated and modeled, the Rule 225 compliance demonstration is appropriately limited to modeling potential TAC emissions from the proposed new GOHT Charge Heater.

The proposed new GOHT Charge Heater will have the capability to combust natural gas or refinery fuel gas. Consistent with the methodology approved by the AQD in previous Permit to Install applications for emission units at the Detroit Refinery, potential TAC emissions due to the combustion of natural gas were estimated using the maximum rated heat input capacity of the proposed new GOHT Charge Heater in conjunction with emission factors published in Section 1.4 of the U.S. EPA's Compilation of Air Pollutant Emission Factors ("AP-42"). Emission factors published in the U.S. EPA's FIRE database (Version 6.22) were used to estimate potential TAC emissions due to the combustion of refinery fuel gas. Potential TAC emissions due to the combustion of natural gas are summarized in **Table 18**, while potential TAC emissions due to the combustion of refinery fuel gas are summarized in **Table 19**.

Rule 225(1) requires new or modified sources of TAC emissions to demonstrate that the ambient impact of each emitted TAC is less than its corresponding initial threshold screening level ("ITSL"), initial risk screening level ("IRSL"), or both if applicable. Screening levels for TACs associated with the combustion of natural gas in the proposed GOHT Charge Heater are summarized in **Table 18**, while screening levels for TACs associated with the combustion of refinery fuel gas are summarized in **Table 19**. For those TACs with no AQD-published screening level, maximum predicted impacts were compared against screening levels previously approved for use by the AQD in previous permit applications and which were developed in accordance with the protocol in Rule 232.

The products of natural gas and refinery fuel gas combustion include limited quantities of polycyclic aromatic hydrocarbons ("PAHs"), which have no AQD-published screening levels. However, in accordance with AQD guidance, screening for the PAHs may be conducted by following the methodology approved by the Scientific Advisory Panel at its July 20, 1995 meeting. The methodology addresses the individual and combined risk of the PAHs according to the following formula:

$$\text{Risk} = \text{Ambient Concentration } (\mu g/m^3) \times \text{potency for benzo(a)pyrene} \times \text{TEF}$$

Where:

Potency for benzo(a)pyrene = 0.0021

TEF = Toxic Equivalency Factor (a.k.a., Estimated Potential Potencies)

Estimated relative potencies for the PAH's potentially emitted from the proposed new GOHT Charge Heater are summarized in **Table 20**.

Dispersion Model

Model simulations of the new GOHT Charge Heater were conducted using the AMS/EPA Regulatory Dispersion Model ("AERMOD", Release No. 14134). AERMOD is currently recommended and approved for use in industrial source modeling applications by the U.S. EPA and the AQD. AERMOD is designed to simulate conditions associated with this air quality impact analysis, including:

- Urban dispersion conditions;
- Both windy and calm conditions;
- Simulation of sources affected by building downwash;
- Concentration estimates over flat and simple terrain; and
- Concentration estimates for short-term and annual averaging periods.

Consistent with U.S. EPA and AQD guidance, AERMOD simulations were conducted in the Regulatory Default mode.

<u>Land Use</u>

Atmospheric conditions affecting the downwind dispersion of air contaminants may be influenced by localized land use. The developers of AERMOD have designed the model to simulate emissions sources located in both rural and urban environments. To assess whether the

modeling domain is located in a rural or urban environment, the U.S. EPA's Guideline on Air Quality Models (2006) suggests using a land use typing scheme developed by Auer[3].

Utilizing satellite imagery, land use within a three kilometer radius of the Detroit Refinery has been assessed in accordance with the Auer procedure and can be classified as urban. Consistent with recent AQD-approved modeling analyses of the Detroit Refinery, AERMOD simulations were conducted in the urban mode at a population of 1,208,574 (URBANOPT 1208574).

Modeling Databases

Databases required as input to AERMOD include receptor points and associated terrain elevations, meteorological data, and emission inventory data. A discussion of the databases utilized in the ambient air quality impact assessment is provided below.

Meteorological Data

The AQD generally requires the use of the most spatially and temporally representative one-year meteorological database when conducting dispersion model simulations of TACs in support of a PTI application. Because the Detroit Refinery is located in an urban setting, the AQD recommends the use of surface observations measured at the Detroit City Airport ("Detroit City", Station No. 14822), combined with coincident upper air observations measured at the National Weather Service station located in White Lake, Michigan (Station No. 72632).

In accordance with AQD guidance, one year (2013) of the Detroit City Airport/White Lake meteorological database, preprocessed by the AQD, was employed in the Rule 225 compliance demonstration.

Receptor Points

AERMOD-predicted concentrations may be estimated at discrete receptor locations. Utilizing aerial imagery in NAD 83 format, a discrete receptor grid was designed to identify maximum predicted TAC impacts due to the proposed new GOHT Charge Heater. The following methodology was utilized to design a receptor grid that covers the new and existing fenceline:

[3] Correlation of Land Use and Cover with Meteorological Anomalies, Journal of Applied Meteorology, 1978.

- Receptors were located along the Detroit Refinery property boundaries at distances not exceeding 10 meters; and
- 25 meter spacing out to a distance of approximately one kilometer from the Detroit Refinery interior.

Illustrated in **Figure 2,** the grid used in the air quality impact analysis consists of 6,210 discrete receptor points.

Topography

Elevated terrain features may affect the transport of atmospheric contaminants as well as serve as areas of potentially higher pollutant impacts. Where appropriate, terrain features should be included in the modeling analysis. Terrain elevations at emission locations and modeled receptor points were assessed using the U.S. EPA's AERMOD Terrain Preprocessor ("AERMAP", Release No. 11103) in conjunction with U.S.G.S. digital elevation model terrain files in NAD 83 format. Terrain data estimated by AERMAP were subsequently input to AERMOD to account for potential fluctuations in elevation.

Source Inputs

The proposed new GOHT Charge Heater will vent through a vertically unobstructed stack, which is most appropriately simulated in AERMOD as a point source. The location of the proposed new GOHT Charge Heater stack is illustrated in **Figure 3**. Point source information data for the proposed new GOHT Charge Heater required as input to AERMOD, including stack height, inside diameter, exhaust temperature, and exit velocity, is provided in **Table 15**.

Building Downwash Effects

Structures located at the Detroit Refinery have the potential to influence plumes emitted from the proposed new GOHT Charge Heater stack. To assess aerodynamic downwash effects on the modeled emission points, the U.S. EPA-recommended BPIP-PRIME program (Release No. 04274) was used to estimate the maximum projected lateral and vertical dimensions of those structures that could influence the modeled stacks, on a wind direction-specific basis.

BPIP-PRIME requires as input the dimensions of all buildings or structures that could potentially influence emissions from the proposed new GOHT Charge Heater stack. Maximum projected lateral and vertical dimensions of influencing structures, as calculated by BPIP-PRIME, were subsequently input to AERMOD. Projections in relation to the stack are shown in **Figure 3**.

Predicted Impacts

Utilizing AERMOD over a one-year meteorological database (2013 Detroit City Airport/White Lake), model simulations of the proposed new GOHT Charge Heater was conducted at a one gram per second unit emission rate. Consistent with the applicable screening levels, concentrations were predicted over 1-hour, 8-hour, 24-hour, and annual averaging periods. Considering the applicable averaging period, maximum predicted concentrations were then multiplied by the potential TAC-specific emission rates to obtain maximum predicted TAC-specific impacts. Maximum TAC-specific impacts from the proposed new GOHT Charge Heater were then compared against the applicable screening levels. As shown in **Tables 18** and **19**, the impact of each TAC is less than its applicable ITSL or SRSL.

The impact of potential PAH emissions from the GOHT Charge Heater, estimated potential potencies, and estimated risks are summarized in **Table 20**. As shown in the table, the individual and combined risk of all emitted PAHs is over two orders of magnitude below a one-in-a-million risk.

As summarized in the tables and described above, the dispersion modeling analyses demonstrate that potential TAC emissions associated with the proposed new GOHT Charge Heater will result in ambient impacts lower than applicable screening levels and risk requirements. Therefore, the Tier 3 Fuels Project is in compliance with the applicable air quality impact requirements of Rule 225.

6. CONCLUDING REMARKS

MPC proposes to install new equipment and to modify certain existing equipment at the Detroit Refinery in order to comply with the U.S. EPA's Tier 3 Motor Vehicle Emissions and Fuel Standards. The information provided in this submittal, including an application form signed by the Responsible Official, constitutes the Permit to Install application covering the Tier 3 Fuels Project.

Upon implementation of the Tier 3 Fuels Project, the Detroit Refinery will produce lower sulfur content gasoline, which in turn is expected to improve air quality in Wayne County. The Tier 3 Fuels Project will not result in an increase in daily or annual refining capacity at the Detroit Refinery. Moreover, the emissions changes associated with the project will not trigger PSD or nonattainment NSR, nor will it result in an exceedance of a health-based screening level under Michigan's air toxics provisions. The project has been designed to comply with all applicable federal and state of Michigan air quality regulations.

If you have any questions regarding this submittal or require any additional supporting information, please do not hesitate to contact me at (616) 554-3210 or Jeff Bruestle of MPC at (313) 297-6068.

Sincerely,
HORIZON ENVIRONMENTAL CORPORATION

Brian E. Leahy
Senior Meteorologist

c: Jeffery L. Bruestle, P.E., MPC

Attachments

FIGURES

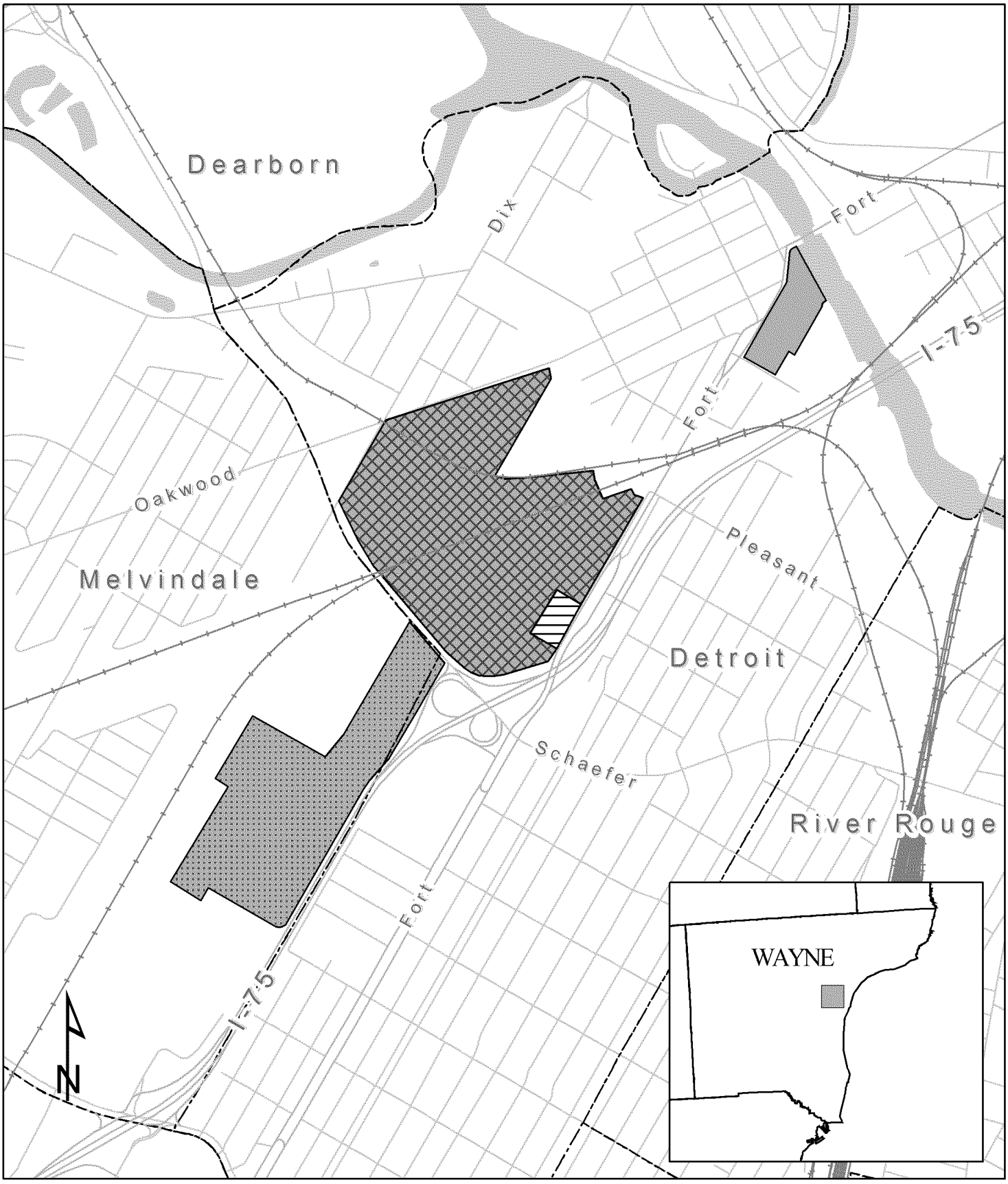

0 0.125 0.25 0.5 0.75 1 Miles

- Detroit Refinery
- Detroit Terminal
- Melvindale Tank Farm
- Rouge Asphalt Terminal

Figure 1
Site Map-Marathon Petroleum Company LP

HORIZON ENVIRONMENTAL

Figure 2
Receptor Grid
Marathon Petroleum Company LP - Detroit Refinery

N

0 125 250 500 750 Meters

HORIZON ENVIRONMENTAL

May 2015

V:\GIS\Marathon\MOC_0265\Layouts\ReceptorGrid.mxd

Figure 3
Location of Gas Oil Hydrotreater
Marathon Petroleum Company LP - Detroit Refinery

N

0 25 50 100 150
Meters

April 2015

HORIZON ENVIRONMENTAL

V:\GIS\Marathon\MOC_0261\Layouts\Figure_4_New_Reactor_Location.mxd

TABLES

Table 1
Tier 3 Fuels Project - Existing Sources Using Actual to Projected Actual Test
Emissions Summary for Nitrogen Oxides
Marathon Petroleum Company LP, Detroit Refinery

REFINERY EQUIPMENT	Actual Conditions 2013			Actual Conditions 2014			Average	Projected Emission Rate			Project Impact			COMMENTS
	Average Firing Rate (MMBTU/hr) (HHV)	Emission Factor (lb/MMBTU) (HHV)	Actual Emissions (tons/year)	Average Firing Rate (MMBTU/hr) (HHV)	Emission Factor (lb/MMBTU) (HHV)	Actual Emissions (tons/year)	Average Emissions (tons/year)	Projected Fired Duty (MMBTU/hr) (HHV)	Emission Factor (lb/MMBTU) (HHV)	Estimated Emissions (tons/year)	Potential Increase (tons/year)	Excludable Portion (tons/year)	Projected Impact (tons/year)	
GOHT Charge Heater	51	0.04	7.94	62	0.04	10.33	9.14	40	0.04	6.65	0.00	0.00	0.00	Projected emissions based on one-half of 2014 max monthly charge rate, adjusted to end-of-run catalyst conditions. No credit taken for emission reduction.
Hydrogen Plant Heater	448	0.006	11.93	424	0.006	11.40	11.67	577	0.006	15.42	3.76	1.25	2.51	Projected emissions based on 2014 max monthly heater firing rate plus extra 94 MMBtu/hr.
SRU (Unit 42)			11.97			12.69	12.33			14.47	2.14	2.14	0.00	Projected emissions based on 2014 max monthly sulfur production.
SRU (Unit 72)			7.69			6.74	7.22			8.27	1.05	0.86	0.19	Projected emissions based on 2014 max monthly sulfur production plus extra 6 long tons per day.
SUBTOTAL							**40.35**			**44.81**	**6.95**	**4.25**	**2.70**	

REFINERY EQUIPMENT	Actual Conditions 2013			Actual Conditions 2014			Average	Projected Emission Rate Without Project			Projected Increase Without Project			COMMENTS
	Average Firing Rate (MMBTU/hr) (HHV)	Emission Factor (lb/MMBTU) (HHV)	Actual Emissions (tons/year)	Average Firing Rate (MMBTU/hr) (HHV)	Emission Factor (lb/MMBTU) (HHV)	Actual Emissions (tons/year)	Average Emissions (tons/year)	Projected Fired Duty (MMBTU/hr) (HHV)	Emission Factor (lb/MMBTU) (HHV)	Estimated Emissions (tons/year)	Potential Increase (tons/year)	Excludable Portion (tons/year)	Projected Impact (tons/year)	
GOHT Charge Heater	51	0.04	7.94	62	0.04	10.33	9.14	80	0.04	13.29		4.16		Projected emissions based on 2014 max monthly charge rate, adjusted to end-of-run catalyst conditions.
Hydrogen Plant Heater	448	0.006	11.93	424	0.006	11.40	11.67	483	0.006	12.92		1.25		Projected emissions based on 2014 max monthly heater firing rate.
SRU (Unit 42)			11.97			12.69	12.33			14.47		2.14		Projected emissions based on 2014 max monthly sulfur production rate.
SRU (Unit 72)			7.69			6.74	7.22			8.07		0.86		Projected emissions based on 2014 max monthly sulfur production rate.
SUBTOTAL							**40.35**			**48.76**		**8.41**		**Significance level for NOx is 40 tons/year**

Updated PTI Application Tables 07-24-15

Table 2
Tier 3 Fuels Project - Existing Sources Using Actual to Projected Actual Test
Emissions Summary for Sulfur Dioxide
Marathon Petroleum Company LP, Detroit Refinery

REFINERY EQUIPMENT	Actual Conditions 2013			Actual Conditions 2014			Average	Projected Emission Rate			Project Impact			COMMENTS
	Average Firing Rate (MMBTU/hr) (HHV)	Emission Factor (lb/MMBTU) (HHV)	Actual Emissions (tons/year)	Average Firing Rate (MMBTU/hr) (HHV)	Emission Factor (lb/MMBTU) (HHV)	Actual Emissions (tons/year)	Average Emissions (tons/year)	Projected Fired Duty (MMBTU/hr) (HHV)	Emission Factor (lb/MMBTU) (HHV)	Estimated Emissions (tons/year)	Potential Increase (tons/year)	Excludable Portion (tons/year)	Projected Impact (tons/year)	
GOHT Charge Heater	51	0.0019	0.43	62	0.0019	0.51	0.47	40	0.0019	0.33	0.00	0.00	0.00	Projected emissions based on one-half of 2014 max monthly charge rate, adjusted to end-of-run catalyst conditions. No credit taken for emission reduction.
Hydrogen Plant Heater	448	0.0013	2.63	424	0.0011	2.01	2.32	577	0.0012	3.15	0.83	0.32	0.51	Projected emissions based on 2014 max monthly heater firing rate plus extra 94 MMBtu/hr.
SRU (Unit 42)			27.63			23.95	25.79			27.31	1.52	1.52	0.00	Projected emissions based on 2014 max monthly sulfur production.
SRU (Unit 72)			21.41			36.49	28.95			44.77	15.82	14.77	1.05	Projected emissions based on 2014 max monthly sulfur production plus extra 6 long tons per day.
SUBTOTAL							**57.53**			**75.56**	**18.17**	**16.61**	**1.57**	

REFINERY EQUIPMENT	Actual Conditions 2013			Actual Conditions 2014			Average	Projected Emission Rate Without Project			Projected Increase Without Project			COMMENTS
	Average Firing Rate (MMBTU/hr) (HHV)	Emission Factor (lb/MMBTU) (HHV)	Actual Emissions (tons/year)	Average Firing Rate (MMBTU/hr) (HHV)	Emission Factor (lb/MMBTU) (HHV)	Actual Emissions (tons/year)	Average Emissions (tons/year)	Projected Fired Duty (MMBTU/hr) (HHV)	Emission Factor (lb/MMBTU) (HHV)	Estimated Emissions (tons/year)	Potential Increase (tons/year)	Excludable Portion (tons/year)	Projected Impact (tons/year)	
GOHT Charge Heater	51	0.0019	0.43	62	0.0019	0.51	0.47	80	0.0019	0.65	0.18			Projected emissions based on 2014 max monthly charge rate, adjusted to end-of-run catalyst conditions.
Hydrogen Plant Heater	448	0.0013	2.63	424	0.0011	2.01	2.32	483	0.0012	2.64	0.32			Projected emissions based on 2014 max monthly heater firing rate.
SRU (Unit 42)			27.63			23.95	25.79			27.31	1.52			Projected emissions based on 2014 max monthly sulfur production rate.
SRU (Unit 72)			21.41			36.49	28.95			43.72	14.77			Projected emissions based on 2014 max monthly sulfur production rate.
SUBTOTAL							**57.53**			**74.32**	**16.79**			**Significance level for SO2 is 40 tons/year**

Table 3
Tier 3 Fuels Project - Existing Sources Using Actual to Projected Actual Test
Emissions Summary for Carbon Monoxide
Marathon Petroleum Company LP, Detroit Refinery

REFINERY EQUIPMENT	Actual Conditions 2013			Actual Conditions 2014			Average	Projected Emission Rate			Project Impact			COMMENTS
	Average Firing Rate (MMBTU/hr) (HHV)	Emission Factor (lb/MMBTU) (HHV)	Actual Emissions (tons/year)	Average Firing Rate (MMBTU/hr) (HHV)	Emission Factor (lb/MMBTU) (HHV)	Actual Emissions (tons/year)	Average Emissions (tons/year)	Projected Fired Duty (MMBTU/hr) (HHV)	Emission Factor (lb/MMBTU) (HHV)	Estimated Emissions (tons/year)	Potential Increase (tons/year)	Excludable Portion (tons/year)	Projected Impact (tons/year)	
GOHT Charge Heater	51	0.0006	0.14	62	0.0004	0.11	0.13	40	0.0004	0.07	0.00	0.00	0.00	Projected emissions based on one-half of 2014 max monthly charge rate, adjusted to end-of-run catalyst conditions. No credit taken for emission reduction.
Hydrogen Plant Heater	448	0.0004	0.83	424	0.0004	0.73	0.78	577	0.0004	1.06	0.28	0.11	0.17	Projected emissions based on 2014 max monthly heater firing rate plus extra 94 MMBtu/hr.
SRU (Unit 42)			0.76			0.42	0.59			0.67	0.08	0.08	0.00	Projected emissions based on 2014 max monthly sulfur production.
SRU (Unit 72)			5.59			2.51	4.05			4.97	0.92	0.80	0.12	Projected emissions based on 2014 max monthly sulfur production plus extra 6 long tons per day.
SUBTOTAL							**5.54**			**6.77**	**1.28**	**0.99**	**0.29**	

REFINERY EQUIPMENT	Actual Conditions 2013			Actual Conditions 2014			Average	Projected Emission Rate Without Project			Projected Increase Without Project			COMMENTS
	Average Firing Rate (MMBTU/hr) (HHV)	Emission Factor (lb/MMBTU) (HHV)	Actual Emissions (tons/year)	Average Firing Rate (MMBTU/hr) (HHV)	Emission Factor (lb/MMBTU) (HHV)	Actual Emissions (tons/year)	Average Emissions (tons/year)	Projected Fired Duty (MMBTU/hr) (HHV)	Emission Factor (lb/MMBTU) (HHV)	Estimated Emissions (tons/year)	Potential Increase (tons/year)	Excludable Portion (tons/year)	Projected Impact (tons/year)	
GOHT Charge Heater	51	0.0006	0.14	62	0.0004	0.11	0.13	80	0.0004	0.14	0.02			Projected emissions based on 2014 max monthly charge rate, adjusted to end-of-run catalyst conditions.
Hydrogen Plant Heater	448	0.0004	0.83	424	0.0004	0.73	0.78	483	0.0004	0.89	0.11			Projected emissions based on 2014 max monthly heater firing rate.
SRU (Unit 42)			0.76			0.42	0.59			0.67	0.08			Projected emissions based on 2014 max monthly sulfur production rate.
SRU (Unit 72)			5.59			2.51	4.05			4.85	0.80			Projected emissions based on 2014 max monthly sulfur production rate.
SUBTOTAL							**5.54**			**6.55**	**1.01**			**Significance level for CO is 100 tons/year**

Table 4
Tier 3 Fuels Project - Existing Sources Using Actual to Projected Actual Test
Emissions Summary for Volatile Organic Compounds
Marathon Petroleum Company LP, Detroit Refinery

REFINERY EQUIPMENT	Actual Conditions 2013			Actual Conditions 2014			Average	Projected Emission Rate			Project Impact			COMMENTS
	Average Firing Rate (MMBTU/hr) (HHV)	Emission Factor (lb/MMBTU) (HHV)	Actual Emissions (tons/year)	Average Firing Rate (MMBTU/hr) (HHV)	Emission Factor (lb/MMBTU) (HHV)	Actual Emissions (tons/year)	Average Emissions (tons/year)	Projected Fired Duty (MMBTU/hr) (HHV)	Emission Factor (lb/MMBTU) (HHV)	Estimated Emissions (tons/year)	Potential Increase (tons/year)	Excludable Portion (tons/year)	Projected Impact (tons/year)	
GOHT Charge Heater	51	0.0008	0.18	62	0.0008	0.22	0.20	40	0.0008	0.14	0.00	0.00	0.00	Projected emissions based on one-half of 2014 max monthly charge rate, adjusted to end-of-run catalyst conditions. No credit taken for emission reduction.
Hydrogen Plant Heater	448	0.0036	7.08	424	0.0007	1.28	4.18	577	0.0022	5.68	1.50	0.58	0.93	Projected emissions based on 2014 max monthly heater firing rate plus extra 94 MMBtu/hr.
Hydrogen Plant Steam	448	0.0007	1.44	424	0.0008	1.44	1.44	577	0.0008	1.96	0.52	0.20	0.32	Projected emissions based on 2014 max monthly heater firing rate plus extra 94 MMBtu/hr.
SRU (Unit 42)			0.15			0.17	0.16			0.19	0.03	0.03	0.00	Projected emissions based on 2014 max monthly sulfur production.
SRU (Unit 72)			0.35			0.31	0.33			0.38	0.05	0.04	0.01	Projected emissions based on 2014 max monthly sulfur production plus extra 6 long tons per day.
GOHT Fugitive Emissions							8.36			6.84	-1.52	0.00	-1.52	See Table 11. Assumes 90% connector monitoring post-project.
SUBTOTAL							**14.67**			**15.20**	**0.58**	**0.85**	**-0.27**	

REFINERY EQUIPMENT	Actual Conditions 2013			Actual Conditions 2014			Average	Projected Emission Rate Without Project			Projected Increase Without Project			COMMENTS
	Average Firing Rate (MMBTU/hr) (HHV)	Emission Factor (lb/MMBTU) (HHV)	Actual Emissions (tons/year)	Average Firing Rate (MMBTU/hr) (HHV)	Emission Factor (lb/MMBTU) (HHV)	Actual Emissions (tons/year)	Average Emissions (tons/year)	Projected Fired Duty (MMBTU/hr) (HHV)	Emission Factor (lb/MMBTU) (HHV)	Estimated Emissions (tons/year)	Potential Increase (tons/year)	Excludable Portion (tons/year)	Projected Impact (tons/year)	
GOHT Charge Heater	51	0.0008	0.18	62	0.0008	0.22	0.20	80	0.0008	0.28		0.08		Projected emissions based on 2014 max monthly charge rate, adjusted to end-of-run catalyst conditions.
Hydrogen Plant Heater	448	0.0036	7.08	424	0.0007	1.28	4.18	483	0.0022	4.76		0.58		Projected emissions based on 2014 max monthly heater firing rate.
Hydrogen Plant Steam	448	0.0007	1.44	424	0.0008	1.44	1.44	483	0.0008	1.64		0.20		Projected emissions based on 2014 max monthly heater firing rate.
SRU (Unit 42)			0.15			0.17	0.16			0.19		0.03		Projected emissions based on 2014 max monthly sulfur production rate.
SRU (Unit 72)			0.35			0.31	0.33			0.37		0.04		Projected emissions based on 2014 max monthly sulfur production rate.
GOHT Fugitive Emissions							8.36			8.36		0.00		See Table 11 for GOHT component count and VOC emission calculations.
SUBTOTAL							**14.67**			**15.60**		**0.93**		**Significance level for VOC is 40 tons/year**

Table 5
Tier 3 Fuels Project - Existing Sources Using Actual to Projected Actual Test
Emissions Summary for Particulate Matter
Marathon Petroleum Company LP, Detroit Refinery

REFINERY EQUIPMENT	Actual Conditions 2013			Actual Conditions 2014			Average	Projected Emission Rate			Project Impact			COMMENTS
	Average Firing Rate (MMBTU/hr) (HHV)	Emission Factor (lb/MMBTU) (HHV)	Actual Emissions (tons/year)	Average Firing Rate (MMBTU/hr) (HHV)	Emission Factor (lb/MMBTU) (HHV)	Actual Emissions (tons/year)	Average Emissions (tons/year)	Projected Fired Duty (MMBTU/hr) (HHV)	Emission Factor (lb/MMBTU) (HHV)	Estimated Emissions (tons/year)	Potential Increase (tons/year)	Excludable Portion (tons/year)	Projected Impact (tons/year)	
GOHT Charge Heater	51	0.0010	0.22	62	0.0010	0.27	0.25	40	0.0010	0.17	0.00	0.00	0.00	Projected emissions based on one-half of 2014 max monthly charge rate, adjusted to end-of-run catalyst conditions. No credit taken for emission reduction.
Hydrogen Plant Heater	448	0.0029	5.75	424	0.0021	3.95	4.85	577	0.0026	6.59	1.74	0.67	1.07	Projected emissions based on 2014 max monthly heater firing rate plus extra 94 MMBtu/hr.
SRU (Unit 42)			2.04			2.15	2.10			2.45	0.36	0.36	0.00	Projected emissions based on 2014 max monthly sulfur production.
SRU (Unit 72)			0.48			0.42	0.45			0.55	0.10	0.09	0.01	Projected emissions based on 2014 max monthly sulfur production plus extra 6 long tons per day.
SUBTOTAL							**7.64**			**9.77**	**2.20**	**1.11**	**1.09**	

REFINERY EQUIPMENT	Actual Conditions 2013			Actual Conditions 2014			Average	Projected Emission Rate Without Project			Projected Increase Without Project			COMMENTS
	Average Firing Rate (MMBTU/hr) (HHV)	Emission Factor (lb/MMBTU) (HHV)	Actual Emissions (tons/year)	Average Firing Rate (MMBTU/hr) (HHV)	Emission Factor (lb/MMBTU) (HHV)	Actual Emissions (tons/year)	Average Emissions (tons/year)	Projected Fired Duty (MMBTU/hr) (HHV)	Emission Factor (lb/MMBTU) (HHV)	Estimated Emissions (tons/year)	Potential Increase (tons/year)	Excludable Portion (tons/year)	Projected Impact (tons/year)	
GOHT Charge Heater	51	0.0010	0.22	62	0.0010	0.27	0.25	80	0.0010	0.35	0.10			Projected emissions based on 2014 max monthly charge rate, adjusted to end-of-run catalyst conditions.
Hydrogen Plant Heater	448	0.0029	5.75	424	0.0021	3.95	4.85	483	0.0026	5.52	0.67			Projected emissions based on 2014 max monthly heater firing rate.
SRU (Unit 42)			2.04			2.15	2.10			2.45	0.36			Projected emissions based on 2014 max monthly sulfur production rate.
SRU (Unit 72)			0.48			0.42	0.45			0.54	0.09			Projected emissions based on 2014 max monthly sulfur production rate.
SUBTOTAL							**7.64**			**8.86**	**1.22**			**Significance level for PM is 25 tons/year**

Table 6
Tier 3 Fuels Project - Existing Sources Using Actual to Projected Actual Test
Emissions Summary for Particulate Matter (PM_{10} and $PM_{2.5}$)
Marathon Petroleum Company LP, Detroit Refinery

REFINERY EQUIPMENT	Actual Conditions 2013			Actual Conditions 2014			Average	Projected Emission Rate			Project Impact			COMMENTS
	Average Firing Rate (MMBTU/hr) (HHV)	Emission Factor (lb/MMBTU) (HHV)	Actual Emissions (tons/year)	Average Firing Rate (MMBTU/hr) (HHV)	Emission Factor (lb/MMBTU) (HHV)	Actual Emissions (tons/year)	Average Emissions (tons/year)	Projected Fired Duty (MMBTU/hr) (HHV)	Emission Factor (lb/MMBTU) (HHV)	Estimated Emissions (tons/year)	Potential Increase (tons/year)	Excludable Portion (tons/year)	Projected Impact (tons/year)	
GOHT Charge Heater	51	0.0019	0.43	62	0.0019	0.52	0.48	40	0.0019	0.33	0.00	0.00	0.00	Projected emissions based on one-half of 2014 max monthly charge rate, adjusted to end-of-run catalyst conditions. No credit taken for emission reduction.
Hydrogen Plant Heater	448	0.0071	13.98	424	0.0027	5.03	9.51	577	0.0051	12.92	3.42	1.31	2.11	Projected emissions based on 2014 max monthly heater firing rate plus extra 94 MMBtu/hr.
SRU (Unit 42)			3.48			3.69	3.59			4.21	0.62	0.62	0.00	Projected emissions based on 2014 max monthly sulfur production.
SRU (Unit 72)			1.36			1.18	1.27			1.56	0.29	0.25	0.04	Projected emissions based on 2014 max monthly sulfur production plus extra 6 long tons per day.
SUBTOTAL							**14.84**			**19.02**	**4.33**	**2.19**	**2.14**	

REFINERY EQUIPMENT	Actual Conditions 2013			Actual Conditions 2014			Average	Projected Emission Rate Without Project			Projected Increase Without Project			COMMENTS
	Average Firing Rate (MMBTU/hr) (HHV)	Emission Factor (lb/MMBTU) (HHV)	Actual Emissions (tons/year)	Average Firing Rate (MMBTU/hr) (HHV)	Emission Factor (lb/MMBTU) (HHV)	Actual Emissions (tons/year)	Average Emissions (tons/year)	Projected Fired Duty (MMBTU/hr) (HHV)	Emission Factor (lb/MMBTU) (HHV)	Estimated Emissions (tons/year)	Potential Increase (tons/year)	Excludable Portion (tons/year)	Projected Impact (tons/year)	
GOHT Charge Heater	51	0.0019	0.43	62	0.0019	0.52	0.48	80	0.0019	0.67	0.19			Projected emissions based on 2014 max monthly charge rate, adjusted to end-of-run catalyst conditions.
Hydrogen Plant Heater	448	0.0071	13.98	424	0.0027	5.03	9.51	483	0.0051	10.82	1.31			Projected emissions based on 2014 max monthly heater firing rate.
SRU (Unit 42)			3.48			3.69	3.59			4.21	0.62			Projected emissions based on 2014 max monthly sulfur production rate.
SRU (Unit 72)			1.36			1.18	1.27			1.52	0.25			Projected emissions based on 2014 max monthly sulfur production rate.
SUBTOTAL							**14.84**			**17.21**	**2.38**			**Significance level for PM10/2.5 is 15/10 tons/year**

Table 7
Tier 3 Fuels Project - Existing Sources Using Actual to Projected Actual Test
Emissions Summary for Sulfuric Acid Mist
Marathon Petroleum Company LP, Detroit Refinery

REFINERY EQUIPMENT	Actual Conditions 2013			Actual Conditions 2014			Average	Projected Emission Rate			Project Impact			COMMENTS
	Average Firing Rate (MMBTU/hr) (HHV)	Emission Factor (lb/MMBTU) (HHV)	Actual Emissions (tons/year)	Average Firing Rate (MMBTU/hr) (HHV)	Emission Factor (lb/MMBTU) (HHV)	Actual Emissions (tons/year)	Average Emissions (tons/year)	Projected Fired Duty (MMBTU/hr) (HHV)	Emission Factor (lb/MMBTU) (HHV)	Estimated Emissions (tons/year)	Potential Increase (tons/year)	Excludable Portion (tons/year)	Projected Impact (tons/year)	
GOHT Charge Heater	51	0.0004	0.08	62	0.0002	0.05	0.07	40	0.0002	0.04	0.00	0.00	0.00	Projected emissions based on one-half of 2014 max monthly charge rate, adjusted to end-of-run catalyst conditions. No credit taken for emission reduction.
Hydrogen Plant Heater	448	0.0006	1.15	424	0.0007	1.28	1.22	577	0.0007	1.65	0.44	0.17	0.27	Projected emissions based on 2014 max monthly heater firing rate plus extra 94 MMBtu/hr.
SRU (Unit 42)			3.18			2.83	3.01			3.23	0.22	0.22	0.00	Projected emissions based on 2014 max monthly sulfur production.
SRU (Unit 72)			1.02			1.81	1.42			2.22	0.81	0.75	0.05	Projected emissions based on 2014 max monthly sulfur production plus extra 6 long tons per day.
SUBTOTAL							**5.70**			**7.14**	**1.46**	**1.14**	**0.32**	

REFINERY EQUIPMENT	Actual Conditions 2013			Actual Conditions 2014			Average	Projected Emission Rate Without Project			Projected Increase Without Project			COMMENTS
	Average Firing Rate (MMBTU/hr) (HHV)	Emission Factor (lb/MMBTU) (HHV)	Actual Emissions (tons/year)	Average Firing Rate (MMBTU/hr) (HHV)	Emission Factor (lb/MMBTU) (HHV)	Actual Emissions (tons/year)	Average Emissions (tons/year)	Projected Fired Duty (MMBTU/hr) (HHV)	Emission Factor (lb/MMBTU) (HHV)	Estimated Emissions (tons/year)	Potential Increase (tons/year)	Excludable Portion (tons/year)	Projected Impact (tons/year)	
GOHT Charge Heater	51	0.0004	0.08	62	0.0002	0.05	0.07	80	0.0002	0.06		0.00		Projected emissions based on 2014 max monthly charge rate, adjusted to end-of-run catalyst conditions.
Hydrogen Plant Heater	448	0.0006	1.15	424	0.0007	1.28	1.22	483	0.0007	1.38		0.17		Projected emissions based on 2014 max monthly heater firing rate.
SRU (Unit 42)			3.18			2.83	3.01			3.23		0.22		Projected emissions based on 2014 max monthly sulfur production rate.
SRU (Unit 72)			1.02			1.81	1.42			2.17		0.75		Projected emissions based on 2014 max monthly sulfur production rate.
SUBTOTAL							**5.70**			**6.84**		**1.14**		**Significance level for H2SO4 is 7 tons/year**

Table 8
Tier 3 Fuels Project - Existing Sources Using Actual to Projected Actual Test
Emissions Summary for Hydrogen Sulfide and Total Reduced Sulfur Compounds
Marathon Petroleum Company LP, Detroit Refinery

REFINERY EQUIPMENT	Actual Conditions 2013			Actual Conditions 2014			Average	Projected Emission Rate			Project Impact			COMMENTS
	Average Firing Rate (MMBTU/hr) (HHV)	Emission Factor (lb/MMBTU) (HHV)	Actual Emissions (tons/year)	Average Firing Rate (MMBTU/hr) (HHV)	Emission Factor (lb/MMBTU) (HHV)	Actual Emissions (tons/year)	Average Emissions (tons/year)	Projected Fired Duty (MMBTU/hr) (HHV)	Emission Factor (lb/MMBTU) (HHV)	Estimated Emissions (tons/year)	Potential Increase (tons/year)	Excludable Portion (tons/year)	Projected Impact (tons/year)	
														Projected emissions based on one-half of 2014 max monthly charge rate, adjusted to end-of-run catalyst conditions. No credit taken for emission reduction.
Sulfur Truck/Railcar Loading (Unit 42)			0.65			0.47	0.56			0.54	0.00	0.00	0.00	Projected emissions based on 2014 max monthly sulfur production. No credit taken for emission reduction.
Sulfur Railcar Loading (Unit 72)			0.13			0.29	0.21			0.36	0.15	0.14	0.01	Projected emissions based on 2014 max monthly sulfur production plus extra 6 long tons per day.
GOHT Fugitive Emissions							0.62			0.45	-0.16	0.00	-0.16	See Tables 12 and 13. Assumes 90% connector monitoring post-project.
SUBTOTAL							**1.39**			**1.35**	**-0.02**	**0.14**	**-0.15**	

REFINERY EQUIPMENT	Actual Conditions 2013			Actual Conditions 2014			Average	Projected Emission Rate Without Project			Projected Increase Without Project			COMMENTS
	Average Firing Rate (MMBTU/hr) (HHV)	Emission Factor (lb/MMBTU) (HHV)	Actual Emissions (tons/year)	Average Firing Rate (MMBTU/hr) (HHV)	Emission Factor (lb/MMBTU) (HHV)	Actual Emissions (tons/year)	Average Emissions (tons/year)	Projected Fired Duty (MMBTU/hr) (HHV)	Emission Factor (lb/MMBTU) (HHV)	Estimated Emissions (tons/year)	Potential Increase (tons/year)	Excludable Portion (tons/year)	Projected Impact (tons/year)	
														Projected emissions based on 2014 max monthly charge rate, adjusted to end-of-run catalyst conditions.
Sulfur Truck/Railcar Loading (Unit 42)			0.65			0.47	0.56			0.54		0.00		Projected emissions based on 2014 max monthly sulfur production rate.
Sulfur Railcar Loading (Unit 72)			0.13			0.29	0.21			0.35		0.14		Projected emissions based on 2014 max monthly sulfur production rate.
GOHT Fugitive Emissions							0.62			0.62		0.00		See Table 12 for GOHT component count and emission calculations.
SUBTOTAL							**1.39**			**1.50**		**0.14**		**Significance level for H2S and TRS is 10 tons/year.**

Table 9
Process Unit Throughputs - 2014
Marathon Petroleum Company LP, Detroit Refinery

Unit Charge Rate	Units	Jan	Feb	March	April	May	June	July	August	Sept	Oct	Nov	Dec		Ave	Max
Crude Unit	BPD	106,484	114,824	131,197	135,972	133,253	133,417	128,552	132,185	128,639	144,771	139,041	136,054		130,366	144,771
FCCU	BPD	28,370	40,207	36,487	40,133	39,117	36,727	37,720	35,612	35,307	38,192	39,518	40,192		37,299	40,207
Naphtha Hydrotreater	BPD	24,102	28,577	32,227	32,534	33,424	33,150	31,673	32,065	29,855	31,787	31,666	31,466		31,044	33,424
Platformer	BPD	15,346	17,265	20,115	20,019	20,781	18,219	19,732	19,595	18,221	19,222	19,732	19,011		18,938	20,781
Gas Oil Hydrotreater	BPD	30,796	43,761	40,710	39,275	40,081	39,835	37,340	35,712	37,350	43,094	38,503	42,866		39,110	43,761
Distillate Hydrotreater	BPD	26,520	31,039	41,250	43,511	43,852	32,469	46,348	35,737	37,360	43,699	43,330	43,036		39,013	46,348
Kerosene Hydrotreater	BPD	5,397	7,121	6,689	6,786	7,298	5,684	6,551	4,648	4,739	4,995	6,849	5,524		6,023	7,298
Alkylate Yield	BPD	4,593	6,895	6,711	6,883	6,978	6,598	6,628	6,004	5,776	6,798	6,797	6,436		6,425	6,978
Regular Coker	BPD	22,907	23,715	28,967	30,307	29,950	28,351	26,816	17,845	20,617	25,683	27,058	27,532		25,812	30,307
Coke Production	BPD	6,703	7,137	8,751	8,506	9,335	8,921	8,001	5,224	6,540	6,427	7,414	7,823		7,565	9,335
Gasoline & Components Total	BPD	57,240	74,647	74,193	73,897	72,935	70,318	72,696	68,823	68,490	76,268	83,529	81,139		72,848	83,529
Distillates & Components Total	BPD	28,009	32,726	44,907	46,702	45,761	41,322	42,303	39,241	38,679	45,146	44,091	45,037		41,160	46,702
Residuals & Coker Feed Total	BPD	9,329	11,415	6,676	10,775	6,514	10,265	13,007	19,446	18,115	17,745	13,991	13,972		12,604	19,446
SRU - East Plant	long tons/day	50	66	67	63	54	58	70	56	60	60	60	69		61	70
SRU - North Plant	long tons/day	187	202	249	246	228	216	223	125	173	208	212	228		208	249
SRU Subtotal		237	267	316	308	282	273	292	181	233	268	272	297		269	316
FCCU Coke Burn	1,000 lb/hr	15.9	20.8	19.4	20.4	19.5	18.9	19.2	18.1	18.2	19.0	19.8	19.9		19.1	20.8
H2 Plant Heater	MMBtu/hr	406	483	427	453	408	388	466	343	433	429	422	434		424	483

Table 10
Tier 3 Fuels Project
Emissions Summary for New GOHT Heater
Marathon Petroleum Company LP, Detroit Refinery

Pollutant	Fired Duty MMBTU/hr (HHV)	Emission Factor lb/MMBtu (HHV)	Estimated Emissions ton/yr	Comments
NO_x	85	0.04	14.89	Projected emission factor consistent with 40 CFR Part 60, Subpart Ja.
SO_2	85	0.0105	3.91	Emission factor consistent with existing GOHT Heater limit in PTI No. 63-08D. Assumes fuel gas with 60 ppm H_2S/TRS.
CO	85	0.02	7.45	Emission factor consistent with existing GOHT Heater limit in PTI No. 63-08D.
VOC	85	0.0055	2.05	Emission factor consistent with existing GOHT Heater limit in PTI No. 63-08D.
PM	85	0.0019	0.71	Emission factor consistent with existing GOHT Heater limit in PTI No. 63-08D.
PM_{10}	85	0.0076	2.83	Emission factor consistent with existing GOHT Heater limit in PTI No. 63-08D.
$PM_{2.5}$	85	0.0076	2.83	Projection assumes PM2.5 is equivalent to PM10.
H_2SO_4	85	0.0105	0.30	Projection based on potential to emit. Assumes 5% of fuel sulfur reacted to SO_3 & 100% of SO_3 reacted to H_2SO_4 mist

Notes:

1. The new GOHT Charge Heater will have a maximum rated firing duty of 115 million BTU per hour (daily basis) and 85 million B TUs per hour (annual basis). The annual potential to emit is based on the maximum rated annual firing duty and the applicable em ission factor.

Table 11
Tier 3 Fuels Project
Gas Oil Hydrotreater Unit - Component Count and VOC Emissions
Marathon Petroleum Company LP, Detroit Refinery

Emission Factor List

Equipment	Factor (lb/hr-comp)	Factor Basis (Reference)	Hours
LL/G valves	6.400E-05	Facility Average (based on 2013 & 2014 SV data)	8,760
HL valves	1.800E-04	Ave Emsn Factor (API Pub343)	8,760
LL Pumps	1.165E-03	Facility Average (based on 2013 & 2014 SV data)	8,760
HL Pumps	1.050E-03	Facility Specific Factor	8,760
Compressors	2.103E-01	Ave Emsn Factor w/ 85% control (EPA Protocol Doc)	8,760
LL/G flanges	5.510E-04	Ave Emsn Factor (EPA Protocol Doc)	8,760
LL/G flanges - monitored	1.653E-05	Ave Emsn Factor (EPA Protocol Doc and TCEQ Doc[3])	8,760
LL/G flanges - monitored	2.985E-05	Facility Average (based on 2013 & 2014 SV data)	8,760
HL flanges	8.160E-05	Ave Emsn Factor (API Pub 343)	8,760
PRVs	3.530E-01	Ave Emsn Factor (EPA Protocol Doc)	8,760
PRVs - monitored	6.310E-03	Facility Average (based on 2013 & 2014 SV data)	8,760
Drains (continuous)	5.174E-03	Facility Specific Factor	8,760

50.00% unmonitored flanges during baseline period.
50.00% monitored flanges during baseline period.
10.00% unmonitored flanges after project.
90.00% monitored flanges after project.

GOHT UNIT - Component Count Summary

	Stream Name	VOC wt%	LL/G Valves	HL Valves	LL Pumps	HL Pumps	Com-pressors	LL/G Flanges	HL Flanges	PRVs	Drains		Totals
Current count Dec 14	all	100	1,795	760	5	15	2	2,624	907	0	73		**6,181**
New for Project	all	100	360	152	0	0	0	1,080	456	0	5		**2,053**
Contingency/Offsites	all	100											**0**
After Project			2,155	912	5	15	2	3,704	1,363	0	78		**8,234**

GOHT UNIT - Estimated Fugitive VOC Emissions (in pounds unless otherwise noted)

	Stream Name	VOC wt%	LL/G Valves	HL Valves	LL Pumps	HL Pumps	Com-pressors	LL/G Flanges	HL Flanges	PRVs	Drains		Total (lb/yr)	Total (tons/yr)
Dec-14	all	100	1,006	1,198	51	138	3,684	6,676	648	0	3,308		**16,711**	**8.36**
New for Project	all	100	202	240				775	326		227		**1,770**	**0.88**
After Project	all	100	1,208	1,438	51	138	3,684	2,660	974	0	3,535		**13,689**	**6.84**

LL/G EMISSIONS

	Total (lb/yr)	Total (tons/yr)
Existing	11,418	5.71
New/Removed	**977**	0.49
After Project	**7,603**	**3.80**

HL EMISSIONS

	Total (lb/yr)	Total (tons/yr)
Existing	1,985	0.99
New/Removed	566	0.28
After Project	**2,550**	**1.28**

DRAIN EMISSIONS

	Total (lb/yr)	Total (tons/yr)
Existing	3,308	1.65
New/Removed	227	0.11
After Project	**3,535**	**1.77**

	Total (lb/yr)	Total (tons/yr)
Existing	16,711	8.36
New/Removed	1,770	0.88
After Project	**13,689**	**6.84**

Notes:

(1) "Facility Average" emission factors are based on the emission rates and component counts from the GuideWare database for the years 2013 & 2014.
(2) "Facility Specific Factor" emission factors are from a study "Fugitive VOC Emission Calculations" conducted by NTH Consultants, Ltd. (Sept 2002).
(3) EPA Protocol Document - Protocol for Equipment Leak Emision Estimates Nov. 1995 (EPA-453/R-93-026)
(4) TCEQ Document - Equipment Leak Fugitives Oct. 2000

Table 12
Tier 3 Fuels Project
Gas Oil Hydrotreater Unit - Component Count and H_2S Emissions
Marathon Petroleum Company LP, Detroit Refinery

Emission Factor List

Equipment	Factor (lb/hr-comp)	Factor Basis (Reference)	Hours
LL/G valves - current	6.400E-05	Facility Average based on 2013 & 2014 monitoring data.	8,760
HL valves	1.800E-04	Ave Emsn Factor (API Pub343)	8,760
LL Pumps - current	1.165E-03	Facility Average based on 2013 & 2014 monitoring data.	8,760
HL Pumps	1.050E-03	Facility Specific Factor	8,760
Compressors	2.103E-01	Ave Emsn Factor w/ 85% control (EPA Protocol Doc)	8,760
Compressors vented to flare	7.010E-02	Ave Emsn Factor w/ 95% control (EPA Protocol Doc)	8,760
LL/G flanges	5.510E-04	Ave Emsn Factor (EPA Protocol Doc)	8,760
LL/G flanges - monitored	2.985E-05	Facility Average (Based on 2013 & 2014 SV data)	8,760
HL flanges	8.160E-05	Ave Emsn Factor (API Pub 343)	8,760
PRVs - monitored	6.310E-03	Facility Specific Factor	8,760
PRVs - unmonitored	3.530E-01	Ave Emsn Factor (EPA Protocol Doc)	8,760
Drains (continuous)	5.174E-03	Facility Specific Factor	8,760
Drains (non-contns)	5.174E-03	Facility Specific Factor	100
LL/G flanges - monitored	1.653E-05	Ave Emsn Factor (EPA Protocol Doc and TCEQ Doc)	8,760

50.00% percentage of unmonitored flanges
50.00% percentage of monitored flanges

GOHT Unit - H2S Component Count Summary

Stream Name	Drawing Number	H2S wt%	LL/G Valves	HL Valves	LL Pumps	HL Pumps	Compressors	LL/G Flanges	LL/G Flanges	HL Flanges	PRVs	Continuous Drains	Non-Continuous	Totals
Reactor Effluent	D8-102 SH 4	3.13	12	0	0	0	0	10		0	0	0	0	**22**
	D8-102 SH 7		9	0	0	0	0	2		0	0	0	0	**11**
	D8-102 SH 8		0	0	0	0	0	3		0	0	0	0	**3**
Hot Separator Vapor	D8-102 SH3	16.58	6	0	0	0	0	6		0	0	0	0	**12**
	D8-102 SH 4		8	0	0	0	0	10		0	0	0	0	**18**
	D8-102 SH 8		2	0	0	0	0	1		0	0	0	0	**3**
	D8-102 SH9		8	0	0	0	0	2		0	0	0	0	**10**
Hot Separator Liquid	D8-102 SH 8	0.19	11	0	0	0	0	2		0	0	0	0	**13**
	D8-102 SH 22		0	0	0	0	0	1		0	0	0	0	**1**
Cold Separator Vapor	D8-102 SH 10	31.71	3	0	0	0	0	3		0	0	0	0	**6**
	D8-102 SH 11		0	0	0	0	0	1		0	0	0	0	**1**
Cold Separator Liquid	D8-102 SH 10	1.27	6	0	0	0	0	1		0	0	0	0	**7**
	D8-102 SH 23		0	0	0	0	0	1		0	0	0	0	**1**
Hot Flash Drum Vapor	D8-102 SH 22	8.38	14	0	0	0	0	4		0	0	0	0	**18**
	D8-102 SH 23		11	0	0	0	0	17		0	0	0	0	**28**
Low Pressure Flash Drum Liquid	D8-102 SH 22	0.64	2	0	0	0	0	3		0	0	0	0	**5**
	D8-102 SH 23		9	0	0	0	0	2		0	0	0	0	**11**
	D8-102 SH 24		2	0	0	0	0	3		0	0	0	0	**5**
Low Pressure Flash Drum Offgas	D8-102 SH 23	52.20	14	0	0	0	0	2		0	0	0	0	**16**
Low Pressure Flash Drum Offgas with Rich Amine Offgas	D8-102 SH 23	51.89	3	0	0	0	0	1		0	0	0	0	**4**
Stripper Overhead	D8-102 SH 24	0.90	9	0	0	0	0	1		0	0	0	0	**10**
	D8-102 SH 25		8	0	0	0	0	3		0	0	0	0	**11**
	D8-102 SH 26		12	0	0	0	0	36		0	0	0	0	**48**
	D8-102 SH 27		0	0	0	0	0	2		0	0	0	0	**2**
Stripper Overhead Offgas	D8-102 SH 27	47.29	14	0	0	0	0	2		0	0	0	0	**16**
	D8-102D SH 29		0	0	0	0	0	1		0	0	0	0	**1**
Recovery Gas	D8-102 SH 23	51.52	5	0	0	0	0	0		0	0	0	0	**5**
	D8-102 SH 29		7	0	0	0	0	4		0	0	0	0	**11**
	D8-102 SH 30		17	0	0	0	1	5		0	0	0	0	**23**
	D8-102 SH 31		17	0	0	0	1	5		0	0	0	0	**23**
	D8-102D SH 32		24	0	0	0	0	3		0	0	0	0	**27**
Rich Amine Offgas	D8-102 SH 12	37.47	20	0	0	0	0	3		0	0	0	0	**23**
Hot Separator Vapor with Stripper Overhead Receiver Wash Water	D8-102 SH 9	10.48	22	0	0	0	0	36		0	0	0	0	**58**
	D8-102 SH 10		2	0	0	0	0	7		0	0	0	0	**9**
Totals			277	0	0	0	2	183		0	0	0	0	**462**
Reactor Effluent	**All**	3.13	21	0	0	0	0	15	42	0	0	0	0	**78**
Hot Separator Vapor	**All**	16.58	24	0	0	0	0	19	48	0	0	0	0	**91**
Hot Separator Liquid	**All**	0.19	11	0	0	0	0	3	22	0	0	0	0	**36**
Cold Separator Vapor	**All**	31.71	3	0	0	0	0	4	6	0	0	0	0	**13**
Cold Separator Liquid	**All**	1.27	6	0	0	0	0	2	12	0	0	0	0	**20**
Hot Flash Drum Vapor	**All**	8.38	25	0	0	0	0	21	50	0	0	0	0	**96**
Low Pressure Flash Drum Liquid	**All**	0.64	13	0	0	0	0	8	26	0	0	0	0	**47**
Low Pressure Flash Drum Off Gas	**All**	52.2	14	0	0	0	0	2	28	0	0	0	0	**44**
Low Pressure Flash Drum Offgas with Rich Amine Offgas	**All**	51.89	3	0	0	0	0	1	6	0	0	0	0	**10**
Stripper Overhead	**All**	0.9	29	0	0	0	0	42	58	0	0	0	0	**129**
Stripper Overhead Offgas	**All**	47.29	14	0	0	0	0	3	28	0	0	0	0	**45**
Recovery Gas	**All**	51.52	70	0	0	0	2	17	140	0	0	0	0	**229**
Rich Amine Offgas	**All**	37.47	20	0	0	0	0	3	40	0	0	0	0	**63**
Hot Separator Vapor with Stripper Overhead Receiver Wash Water	**All**	10.48	24	0	0	0	0	43	48	0	0	0	0	**115**

GOHT Unit - Estimated Fugitive H2S Emissions (in pounds unless otherwise noted)

Stream Name	Drawing Number	H2S wt%	LL/G Valves	HL Valves	LL Pumps	HL Pumps	Compressors	LL/G Flanges	LL/G Flanges	HL Flanges	PRVs	Continuous Drains	Non-Continuous	Total (lb/yr)	Total (tons/yr)
Reactor Effluent	All	3.13	0.369	0.000	0.000	0.000	0.000	1.194	3.345	0.000	0.000	0.000	0.000	**4.91**	**0.0025**
Hot Separator Vapor	All	16.58	2.231	0.000	0.000	0.000	0.000	8.014	20.247	0.000	0.000	0.000	0.000	**30.49**	**0.0152**
Hot Separator Liquid	All	0.19	0.012	0.000	0.000	0.000	0.000	0.015	0.106	0.000	0.000	0.000	0.000	**0.13**	**0.0001**
Cold Separator Vapor	All	31.71	0.533	0.000	0.000	0.000	0.000	3.227	4.840	0.000	0.000	0.000	0.000	**8.60**	**0.0043**
Cold Separator Liquid	All	1.27	0.043	0.000	0.000	0.000	0.000	0.065	0.388	0.000	0.000	0.000	0.000	**0.50**	**0.0002**
Hot Flash Drum Vapor	All	8.38	1.175	0.000	0.000	0.000	0.000	4.477	10.660	0.000	0.000	0.000	0.000	**16.31**	**0.0082**
Low Pressure Flash Drum Liquid	All	0.64	0.047	0.000	0.000	0.000	0.000	0.130	0.423	0.000	0.000	0.000	0.000	**0.60**	**0.0003**
Low Pressure Flash Drum Offgas	All	52.20	4.097	0.000	0.000	0.000	0.000	2.656	37.185	0.000	0.000	0.000	0.000	**43.94**	**0.0220**
Low Pressure Flash Drum Offgas with Rich Amine Offgas	All	51.89	0.873	0.000	0.000	0.000	0.000	1.320	7.921	0.000	0.000	0.000	0.000	**10.11**	**0.0051**
Stripper Overhead	All	0.90	0.146	0.000	0.000	0.000	0.000	0.962	1.328	0.000	0.000	0.000	0.000	**2.44**	**0.0012**
Stripper Overhead Offgas	All	47.29	3.712	0.000	0.000	0.000	0.000	3.609	33.687	0.000	0.000	0.000	0.000	**41.01**	**0.0205**
Recovery Gas [3]	All	60.05	23.567	0.000	0.000	0.000	737.505	25.972	213.884	0.000	0.000	0.000	0.000	**1,000.93**	**0.5005**
Rich Amine Offgas	All	37.47	4.201	0.000	0.000	0.000	0.000	2.860	38.131	0.000	0.000	0.000	0.000	**45.19**	**0.0226**
Hot Separator Vapor with Stripper Overhead Receiver Wash Water	All	10.48	1.410	0.000	0.000	0.000	0.000	11.465	12.798	0.000	0.000	0.000	0.000	**25.67**	**0.0128**
Total			42.41	0.00	0.00	0.00	737.51	65.97	384.94	0.00	0.00	0.00	0.00	**1,230.83**	**0.6154**

LL/G EMISSIONS

	Total (lb/yr)	Total (tons/yr)
After Coker	**1,230.830**	**0.62**

HL EMISSIONS

	Total (lb/yr)	Total (tons/yr)
After Coker	**0.00**	**0.00**

DRAIN EMISSIONS

	Total (lb/yr)	Total (tons/yr)
After Coker	**0.00**	**0.00**

Notes:
(1) "Facility Average" emission factors for future emissions are based on emission rates and component counts determined by the Refinery's VOC Monitoring Program database for the years noted, and EPA Protocol Document for unmonitored valves and pumps.
(2) "Facility Specific Factor" emission factors are from a study "Fugitive VOC Emission Calculations" conducted by NTH Consultants, Ltd. (Sept 2002).
(3) Composition updated based on Sept. 2013 analysis

Table 13
Tier 3 Fuels Project
Gas Oil Hydrotreater Unit - Component Count and Projected H_2S Emissions
Marathon Petroleum Company LP, Detroit Refinery

Emission Factor List

Equipment	Factor (lb/hr-comp)	Factor Basis (Reference)	Hours
LL/G valves - current	6.400E-05	Facility Average based on 2013 & 2014 monitoring data.	8,760
HL valves	1.800E-04	Ave Emsn Factor (API Pub343)	8,760
LL Pumps - current	1.165E-03	Facility Average based on 2013 & 2014 monitoring data.	8,760
HL Pumps	1.050E-03	Facility Specific Factor	8,760
Compressors	2.103E-01	Ave Emsn Factor w/ 85% control (EPA Protocol Doc)	8,760
Compressors vented to flare	7.010E-02	Ave Emsn Factor w/ 95% control (EPA Protocol Doc)	8,760
LL/G flanges	5.510E-04	Ave Emsn Factor (EPA Protocol Doc)	8,760
LL/G flanges - monitored	2.985E-05	Facility Average (Based on 2013 & 2014 SV data)	8,760
HL flanges	8.160E-05	Ave Emsn Factor (API Pub 343)	8,760
PRVs - monitored	6.310E-03	Facility Specific Factor	8,760
PRVs - unmonitored	3.530E-01	Ave Emsn Factor (EPA Protocol Doc)	8,760
Drains (continuous)	5.174E-03	Facility Specific Factor	8,760
Drains (non-contns)	5.174E-03	Facility Specific Factor	100
LL/G flanges - monitored	1.653E-05	Ave Emsn Factor (EPA Protocol Doc and TCEQ Doc)	8,760

10.00% percentage of unmonitored flanges
90.00% percentage of monitored flanges

GOHT Unit - H2S Component Count Summary

Stream Name	Drawing Number	H2S wt%	LL/G Valves	HL Valves	LL Pumps	HL Pumps	Compressors	LL/G Flanges	LL/G Flanges	HL Flanges	PRVs	Continuous Drains	Non-Continuous	Totals
Reactor Effluent (2 reactor system)	D8-102 SH 4	3.13	24	0	0	0	0	20		0	0	0	0	**44**
	D8-102 SH 7		18	0	0	0	0	4		0	0	0	0	**22**
	D8-102 SH 8		0	0	0	0	0	6		0	0	0	0	**6**
Hot Separator Vapor	D8-102 SH3	16.58	6	0	0	0	0	6		0	0	0	0	**12**
	D8-102 SH 4		8	0	0	0	0	10		0	0	0	0	**18**
	D8-102 SH 8		2	0	0	0	0	1		0	0	0	0	**3**
	D8-102 SH9		8	0	0	0	0	2		0	0	0	0	**10**
Hot Separator Liquid	D8-102 SH 8	0.19	11	0	0	0	0	2		0	0	0	0	**13**
	D8-102 SH 22		0	0	0	0	0	1		0	0	0	0	**1**
Cold Separator Vapor	D8-102 SH 10	31.71	3	0	0	0	0	3		0	0	0	0	**6**
	D8-102 SH 11		0	0	0	0	0	1		0	0	0	0	**1**
Cold Separator Liquid	D8-102 SH 10	1.27	6	0	0	0	0	1		0	0	0	0	**7**
	D8-102 SH 23		0	0	0	0	0	1		0	0	0	0	**1**
Hot Flash Drum Vapor	D8-102 SH 22	8.38	14	0	0	0	0	4		0	0	0	0	**18**
	D8-102 SH 23		11	0	0	0	0	17		0	0	0	0	**28**
Low Pressure Flash Drum Liquid	D8-102 SH 22	0.64	2	0	0	0	0	3		0	0	0	0	**5**
	D8-102 SH 23		9	0	0	0	0	2		0	0	0	0	**11**
	D8-102 SH 24		2	0	0	0	0	3		0	0	0	0	**5**
Low Pressure Flash Drum Offgas	D8-102 SH 23	52.20	14	0	0	0	0	2		0	0	0	0	**16**
Low Pressure Flash Drum Offgas with Rich Amine Offgas	D8-102 SH 23	51.89	3	0	0	0	0	1		0	0	0	0	**4**
Stripper Overhead	D8-102 SH 24	0.90	9	0	0	0	0	1		0	0	0	0	**10**
	D8-102 SH 25		8	0	0	0	0	3		0	0	0	0	**11**
	D8-102 SH 26		12	0	0	0	0	36		0	0	0	0	**48**
	D8-102 SH 27		0	0	0	0	0	2		0	0	0	0	**2**
Stripper Overhead Offgas	D8-102 SH 27	47.29	14	0	0	0	0	2		0	0	0	0	**16**
	D8-102D SH 29		0	0	0	0	0	1		0	0	0	0	**1**
Recovery Gas	D8-102 SH 23	51.52	5	0	0	0	0	0		0	0	0	0	**5**
	D8-102 SH 29		7	0	0	0	0	4		0	0	0	0	**11**
	D8-102 SH 30		17	0	0	0	1	5		0	0	0	0	**23**
	D8-102 SH 31		17	0	0	0	1	5		0	0	0	0	**23**
	D8-102D SH 32		24	0	0	0	0	3		0	0	0	0	**27**
Rich Amine Offgas	D8-102 SH 12	37.47	20	0	0	0	0	3		0	0	0	0	**23**
Hot Separator Vapor with Stripper Overhead Receiver Wash Water	D8-102 SH 9	10.48	22	0	0	0	0	36		0	0	0	0	**58**
	D8-102 SH 10		2	0	0	0	0	7		0	0	0	0	**9**
Totals			298	0	0	0	2	198		0	0	0	0	**498**
Reactor Effluent	**All**	3.13	42	0	0	0	0	30	84	0	0	0	0	**156**
Hot Separator Vapor	**All**	16.58	24	0	0	0	0	19	48	0	0	0	0	**91**
Hot Separator Liquid	**All**	0.19	11	0	0	0	0	3	22	0	0	0	0	**36**
Cold Separator Vapor	**All**	31.71	3	0	0	0	0	4	6	0	0	0	0	**13**
Cold Separator Liquid	**All**	1.27	6	0	0	0	0	2	12	0	0	0	0	**20**
Hot Flash Drum Vapor	**All**	8.38	25	0	0	0	0	21	50	0	0	0	0	**96**
Low Pressure Flash Drum Liquid	**All**	0.64	13	0	0	0	0	8	26	0	0	0	0	**47**
Low Pressure Flash Drum Off Gas	**All**	52.2	14	0	0	0	0	2	28	0	0	0	0	**44**
Low Pressure Flash Drum Offgas with Rich Amine Offgas	**All**	51.89	3	0	0	0	0	1	6	0	0	0	0	**10**
Stripper Overhead	**All**	0.9	29	0	0	0	0	42	58	0	0	0	0	**129**
Stripper Overhead Offgas	**All**	47.29	14	0	0	0	0	3	28	0	0	0	0	**45**
Recovery Gas	**All**	51.52	70	0	0	0	2	17	140	0	0	0	0	**229**
Rich Amine Offgas	**All**	37.47	20	0	0	0	0	3	40	0	0	0	0	**63**
Hot Separator Vapor with Stripper Overhead Receiver Wash Water	**All**	10.48	24	0	0	0	0	43	48	0	0	0	0	**115**

GOHT Unit - Estimated Fugitive H2S Emissions (in pounds unless otherwise noted)

Stream Name	Drawing Number	H2S wt%	LL/G Valves	HL Valves	LL Pumps	HL Pumps	Compressors	LL/G Flanges	LL/G Flanges	HL Flanges	PRVs	Continuous Drains	Non-Continuous	Total (lb/yr)	Total (tons/yr)
Reactor Effluent (2 reactor system)	All	3.13	0.737	0.000	0.000	0.000	0.000	0.674	1.888	0.000	0.000	0.000	0.000	**3.30**	**0.0016**
Hot Separator Vapor	All	16.58	2.231	0.000	0.000	0.000	0.000	2.262	5.714	0.000	0.000	0.000	0.000	**10.21**	**0.0051**
Hot Separator Liquid	All	0.19	0.012	0.000	0.000	0.000	0.000	0.004	0.030	0.000	0.000	0.000	0.000	**0.05**	**0.0000**
Cold Separator Vapor	All	31.71	0.533	0.000	0.000	0.000	0.000	0.911	1.366	0.000	0.000	0.000	0.000	**2.81**	**0.0014**
Cold Separator Liquid	All	1.27	0.043	0.000	0.000	0.000	0.000	0.018	0.109	0.000	0.000	0.000	0.000	**0.17**	**0.0001**
Hot Flash Drum Vapor	All	8.38	1.175	0.000	0.000	0.000	0.000	1.264	3.008	0.000	0.000	0.000	0.000	**5.45**	**0.0027**
Low Pressure Flash Drum Liquid	All	0.64	0.047	0.000	0.000	0.000	0.000	0.037	0.119	0.000	0.000	0.000	0.000	**0.20**	**0.0001**
Low Pressure Flash Drum Offgas	All	52.20	4.097	0.000	0.000	0.000	0.000	0.750	10.494	0.000	0.000	0.000	0.000	**15.34**	**0.0077**
Low Pressure Flash Drum Offgas with Rich Amine Offgas	All	51.89	0.873	0.000	0.000	0.000	0.000	0.373	2.235	0.000	0.000	0.000	0.000	**3.48**	**0.0017**
Stripper Overhead	All	0.90	0.146	0.000	0.000	0.000	0.000	0.271	0.375	0.000	0.000	0.000	0.000	**0.79**	**0.0004**
Stripper Overhead Offgas	All	47.29	3.712	0.000	0.000	0.000	0.000	1.019	9.507	0.000	0.000	0.000	0.000	**14.24**	**0.0071**
Recovery Gas [3]	All	60.05	23.567	0.000	0.000	0.000	737.505	7.330	60.363	0.000	0.000	0.000	0.000	**828.77**	**0.4144**
Rich Amine Offgas	All	37.47	4.201	0.000	0.000	0.000	0.000	0.807	10.762	0.000	0.000	0.000	0.000	**15.77**	**0.0079**
Hot Separator Vapor with Stripper Overhead Receiver Wash Water	All	10.48	1.410	0.000	0.000	0.000	0.000	3.236	3.612	0.000	0.000	0.000	0.000	**8.26**	**0.0041**
Total			42.78	0.00	0.00	0.00	737.51	18.95	109.58	0.00	0.00	0.00	0.00	**908.83**	**0.4544**

LL/G EMISSIONS

	Total (lb/yr)	Total (tons/yr)
After Coker	**908.827**	**0.45**

HL EMISSIONS

	Total (lb/yr)	Total (tons/yr)
After Coker	**0.00**	**0.00**

DRAIN EMISSIONS

	Total (lb/yr)	Total (tons/yr)
After Coker	**0.00**	**0.00**

Notes:
(1) "Facility Average" emission factors for future emissions are based on emission rates and component counts determined by the Refinery's VOC Monitoring Program database for the years noted, and EPA Protocol Document for unmonitored valves and pumps.
(2) "Facility Specific Factor" emission factors are from a study "Fugitive VOC Emission Calculations" conducted by NTH Consultants, Ltd. (Sept 2002).
(3) Composition updated based on Sept. 2013 analysis

Table 14
Evaluation of Stacks Associated with the Tier 3 Fuels Project
Marathon Petroleum Company LP, Detroit Refinery

Stack	Stack Height (ft)	Stack Vertically Unobstructed	Stack Meets GEP Height Requirement	Stack >1.5 Times Building Height	Stack Meets Table 1 Equivalency
New GOHT Charge Heater	170	Yes	No	No	Yes
SRU TO (Unit 42)	199.5	Yes	Yes	Yes	-
SRU TO (Unit 72)	195	Yes	Yes	Yes	-
Hydrogen Plant Heater	150	Yes	No	No	Yes

Notes:

1. Of the four stacks associated with the Tier 3 Fuels Project, only the proposed new GOHT Charge Heater stack and existing Hydrogen Plant Heater are subject to building downwash.

New GOHT Charge Heater Stack in Comparison to the Minimum Table 1 Stack Design Criteria

Averaging Period	Maximum Modeled Impact (ug/m^3)		
	Proposed Stack Configuration	Table 1 Equivalency	
	Heater Stack at 170' with Downwash	Heater Stack at 60' with Downwash	Heater Stack at 30' no Downwash
1-Hour	5.0	77.2	50.1
8-Hour	3.4	58.4	24.1
24-Hour	1.7	33.5	15.5
Annual	0.2	2.9	0.9

Notes:

1. Maximum predicted impacts using AERMOD at a 1 g/s unit (hypothetical) emission rate.
2. The "Table 1 Equivalency" scenario shows the maximum impact that would occur if the proposed GOHT Charge Heater stack were built to the minimum height/building downwash configuration required under either Table 1 of the AQD's Dispersion Modeling Guidance memorandum.

Hydrogen Plant Heater Stack in Comparison to the Minimum Table 1 Stack Design Criteria

Averaging Period	Maximum Modeled Impact (ug/m^3)		
	Proposed Stack Configuration	Table 1 Equivalency	
	Heater Stack at 150' with Downwash	Heater Stack at 60' with Downwash	Heater Stack at 30' no Downwash
1-Hour	2.6	9.8	29.1
8-Hour	1.9	5.5	9.0
24-Hour	0.9	2.5	4.0
Annual	0.1	0.2	0.3

Notes:

1. Maximum predicted impacts using AERMOD at a 1 g/s unit (hypothetical) emission rate.
2. The "Table 1 Equivalency" scenario shows the maximum impact that would occur if the Hydrogen Plant Heater stack were built to the minimum height/building downwash configuration required under either Table 1 of the AQD's Dispersion Modeling Guidance memorandum.

Table 15
Tier 3 Fuels Project
Stack Exhaust Parameters
Marathon Petroleum Company LP, Detroit Refinery

Stack	Stack Coordinate (UTM)		Daily Average Firing Duty	Stack Height		Exit Temperature		Volumetric Flow Rate	Exit Velocity		Inside Diameter	
	Easting	Northing	(MMBtu/hr)	(feet)	(meters)	(F)	(K)	(acfm)	(f/s)	(m/s)	(inches)	(meters)
New GOHT Charge Heater	322142.6	4683238.3	115	170.0	51.82	436	497.6	37,238	33.25	10.13	58.5	1.486
Hydrogen Plant Heater (New)	322060.5	4683806.5	577	150.0	45.72	350	449.8	182,717	38.77	11.82	120.0	3.048
SRU Thermal Oxidizer (Unit 42)	322125.6	4683146.0	25	199.5	60.81	1,300	977.6	15,901	27.55	8.40	42.0	1.067
SRU/TGU Thermal Oxidizer (Unit 72)	322142.5	4683782.1	38	195.0	59.44	1,300	977.6	24,170	41.87	12.76	42.0	1.067

Notes:
1. Volumetric flow rate estimated using U.S. EPA Method 19 and the daily average heat input.

Table 16
Tier 3 Fuels Project
Comparison of Modeled PM_{10} and $PM_{2.5}$ Impacts to the Significant Impact Levels
Project Emissions
Marathon Petroleum Company LP, Detroit Refinery

Equipment	Potential Increase 24-Hour Simulation (tons/yr)	Potential Increase 24-Hour Simulation (lbs/hr)	Potential Increase 24-Hour Simulation (g/s)	Potential Increase Annual Simulation (tons/yr)	Potential Increase Annual Simulation (g/s)
New GOHT Charge Heater	-	0.87	0.110	3.83	0.110
Existing GOHT Charge Heater	-	-	-	-	-
Hydrogen Plant Heater	3.42	-	0.098	3.42	0.098
SRU (Unit 42)	0.62	-	0.018	0.62	0.018
SRU (Unit 72)	0.29	-	0.008	0.29	0.008

Notes:
1. The potential increase represents the projected actual emissions minus baseline actual emissions. Excludable emissions (i.e., those emissions that would have occurred without the project) were conservatively included in the model simulation.
2. The potential increase due to the New GOHT Charge Heater for both the 24-hour and annual simulations were both based on the max. daily 115 MMBtu/hr heat input rating (even though the annual heat input rating is only 85 MMBtu/hr).

Modeled PM_{10} and $PM_{2.5}$ Impacts - 24 Hour Averaging Period

Averaging Period	Year	UTM Coordinate (m) Easting	UTM Coordinate (m) Northing	Predicted Impact (ug/m^3)	Significant Impact Level (ug/m^3) PM_{10}	Significant Impact Level (ug/m^3) $PM_{2.5}$
24-Hour	2009	322450.0	4682950.0	0.18	5	1.2
	2010	322625.0	4682600.0	0.21		
	2011	322125.0	4682825.0	0.22		
	2012	322125.0	4682850.0	0.22		
	2013	322050.0	4682825.0	0.23		

Notes:
1. Modeled individual year 1-hour impacts represent the highest, 1st highest impact across the receptor grid.
2. Predicted impacts include the combined impact of the new GOHT Charge Heater, Hydrogen Plant Heater, and both SRU TOs.

Modeled PM_{10} and $PM_{2.5}$ Impacts - Annual Averaging Period

Averaging Period	Year	UTM Coordinate (m) Easting	UTM Coordinate (m) Northing	Predicted Impact (ug/m^3)	Significant Impact Level (ug/m^3) PM_{10}	Significant Impact Level (ug/m^3) $PM_{2.5}$
Annual	2009	322519.0	4683535.1	0.03	1	0.3
	2010	322522.9	4683455.8	0.03		
	2011	322475.0	4683450.0	0.03		
	2012	322525.0	4683500.0	0.03		
	2013	322531.9	4683458.6	0.03		

Notes:
1. Predicted impacts include the combined impact of the new GOHT Charge Heater, Hydrogen Plant Heater, and both SRU TOs.

Table 17
Tier 3 Fuels Project
Comparison of Modeled NO_2 Impacts to the Significant Impact Levels
Marathon Petroleum Company LP, Detroit Refinery

Equipment	Potential Increase 1-Hour Simulation			Potential Increase Annual Simulation	
	(tons/yr)	(lbs/hr)	(g/s)	(tons/yr)	(g/s)
New GOHT Charge Heater	-	4.6	0.580	14.89	0.428
Existing GOHT Charge Heater	-	-	-	-	-
Hydrogen Plant Heater	3.76	-	0.108	3.76	0.108
SRU (Unit 42)	2.14	-	0.062	2.14	0.062
SRU (Unit 72)	1.05	-	0.030	1.05	0.030

Notes:

1. The potential increase represents the projected actual emissions minus baseline actual emissions. Excludable emissions (i.e., those emissions that would have occurred without the project) were conservatively included in the model simulation.
2. The 1-hour potential increase for the New GOHT Charge Heater based on the max. daily 115 MMBtu/hr heat input rating.

Modeled NO_2 Impacts - 1 Hour Averaging Period

Averaging Period	Year	UTM Coordinate (m)		Max. Predicted NO_x Impact (ug/m^3)	Max. Predicted NO_2 Impact (ug/m^3)	Significant Impact Level (ug/m^3)
		Easting	Northing			
1-Hour	2010	321947.7	4683142.7	3.0	2.4	7.6
	2011	322039.6	4683021.8	3.0	2.4	
	2012	322045.4	4683014.3	3.0	2.4	
	2013	322039.6	4683021.8	3.0	2.4	
	2014	322056.9	4682999.4	3.0	2.4	

Modeled NO_2 Impacts - Annual Averaging Period

Averaging Period	Year	UTM Coordinate (m)		Predicted NO_x Impact (ug/m^3)	Predicted NO_2 Impact (ug/m^3)	Significant Impact Level (ug/m^3)
		Easting	Northing			
Annual	2010	322500.0	4683025.0	0.09	0.07	1.0
	2011	322495.9	4683447.5	0.08	0.06	
	2012	322504.9	4683450.3	0.09	0.07	
	2013	322531.9	4683458.6	0.09	0.07	
	2014	322525.0	4683475.0	0.09	0.07	

Table 18
Tier 3 Fuels Project
Air Toxic Emissions and Ambient Impact Summary
New GOHT Charge Heater Combusting Natural Gas
Marathon Petroleum Company LP, Detroit Refinery

NATURAL GAS

Pollutant	CAS Number	Screening Level (ug/m^3)	Averaging Period	ITSL/IRSL	Emission Factor[a] (lb/MMscf)	Emission Rate (lb/hr)	Emission Rate (g/s)	Modeled Impact at Potential Emission Rate (ug/m^3)	Concentration Below ITSL/IRSL?	Notes
2-Methylnaphthalene	91-57-6	1.00E+01	Annual	ITSL	2.4E-05	2.8E-06	3.5E-07	6.0E-08	Yes	
3-Methylchloranthrene	56-49-5	5.00E-01	Annual	ITSL	1.8E-06	2.1E-07	2.6E-08	4.5E-09	Yes	(1)
7,12-Dimethylbenz(a)anthracene	57-97-6	9.30E-01	Annual	ITSL	1.6E-05	1.8E-06	2.3E-07	4.0E-08	Yes	(2)
Acenaphthene	83-32-9	2.10E+02	24 hr	ITSL	1.8E-06	2.1E-07	2.6E-08	4.4E-08	Yes	
Acenaphthylene	208-96-8	3.50E+01	24 hr	ITSL	1.8E-06	2.1E-07	2.6E-08	4.4E-08	Yes	
Anthracene	120-12-7	1.00E+03	24 hr	ITSL	2.4E-06	2.8E-07	3.5E-08	5.8E-08	Yes	
Arsenic	7440-38-2	2.00E-04	Annual	IRSL	2.0E-04	2.3E-05	2.9E-06	5.0E-07	Yes	
Barium	7440-39-3	5.00E+00	8 hr	ITSL	4.4E-03	5.1E-04	6.4E-05	2.0E-04	Yes	
Benzene	71-43-2	1.00E-01	Annual	IRSL	2.1E-03	2.4E-04	3.0E-05	5.2E-06	Yes	
		3.00E+01	Annual	ITSL	2.1E-03	2.4E-04	3.0E-05	5.2E-06	Yes	
		3.00E+01	24-hr	ITSL	2.1E-03	2.4E-04	3.0E-05	5.1E-05	Yes	
Benzo(a)anthracene	56-55-3	5.00E-03	Annual	IRSL	1.8E-06	2.1E-07	2.6E-08	4.5E-09	Yes	(3)
Benzo(a)pyrene	50-32-8	5.00E-04	Annual	IRSL	1.2E-06	1.4E-07	1.7E-08	3.0E-09	Yes	
Benzo(b)fluoranthene	205-99-2	5.00E-03	Annual	IRSL	1.8E-06	2.1E-07	2.6E-08	4.5E-09	Yes	(3)
Benzo(g,h,i)perylene	191-24-2	1.20E+01	24 hr	IRSL	1.2E-06	1.4E-07	1.7E-08	2.9E-08	Yes	
Benzo(k)fluoranthene	205-82-3	5.00E-02	Annual	IRSL	1.8E-06	2.1E-07	2.6E-08	4.5E-09	Yes	(3)
Beryllium	7440-41-7	2.00E-02	24 hr	ITSL	1.2E-05	1.4E-06	1.7E-07	2.9E-07	Yes	
		4.00E-04	Annual	IRSL	1.2E-05	1.4E-06	1.7E-07	3.0E-08	Yes	
Butane	106-97-8	2.38E+04	8 hr	ITSL	2.1E+00	2.4E-01	3.0E-02	9.5E-02	Yes	
Cadmium	7440-43-9	6.00E-04	Annual	IRSL	1.1E-03	1.3E-04	1.6E-05	2.7E-06	Yes	
Chromium	7440-47-3	5.00E+00	8 hr	IRSL	1.4E-03	1.6E-04	2.0E-05	6.3E-05	Yes	(4)
Chrysene	218-01-9	5.00E-01	Annual	IRSL	1.8E-06	2.1E-07	2.6E-08	4.5E-09	Yes	(3)
Cobalt	7440-48-4	2.00E-01	8 hr	ITSL	8.4E-05	9.7E-06	1.2E-06	3.8E-06	Yes	
Copper	7440-50-8	2.00E+00	8 hr	ITSL	8.5E-04	9.8E-05	1.2E-05	3.8E-05	Yes	
Dibenzo(a,h)anthracene	53-70-3	5.00E-04	Annual	IRSL	1.2E-06	1.4E-07	1.7E-08	3.0E-09	Yes	(3)
Dichlorobenzene	25321-22-6	3.00E+00	Annual	ITSL	1.2E-03	1.4E-04	1.7E-05	3.0E-06	Yes	(5)
1,2-Dichlorobenzene	9-55-1	3.00E+02	24 hr	ITSL	1.2E-03	1.4E-04	1.7E-05	2.9E-05	Yes	
1,4-Dichlorobenzene	106-46-7	8.00E+02	Annual	ITSL	1.2E-03	1.4E-04	1.7E-05	3.0E-06	Yes	
		1.10E-02	Annual	IRSL	1.2E-03	1.4E-04	1.7E-05	3.0E-06	Yes	
1,3-Dichlorobenzene	541-73-1	3.00E+00	Annual	ITSL	1.2E-03	1.4E-04	1.7E-05	3.0E-06	Yes	
Fluoranthene	206-44-0	1.40E+02	24 hr	ITSL	3.0E-06	3.5E-07	4.3E-08	7.3E-08	Yes	
Formaldehyde	50-00-0	8.00E-02	Annual	IRSL	7.5E-02	8.6E-03	1.1E-03	1.9E-04	Yes	
		3.00E+01	24 hr	ITSL	7.5E-02	8.6E-03	1.1E-03	1.8E-03	Yes	
Hexane	110-54-3	7.00E+02	24 hr	ITSL	1.8E+00	2.1E-01	2.6E-02	4.4E-02	Yes	
Indeno(1,2,3-cd)pyrene	193-39-5	5.00E-03	Annual	IRSL	1.8E-06	2.1E-07	2.6E-08	4.5E-09	Yes	(3)
Manganese	7439-96-5	3.00E-01	Annual	ITSL	3.8E-04	4.4E-05	5.5E-06	9.5E-07	Yes	
Mercury	7439-97-6	3.00E-01	Annual	ITSL	2.6E-04	3.0E-05	3.8E-06	6.5E-07	Yes	(6)
		1.00E+00	24 hr	ITSL	2.6E-04	3.0E-05	3.8E-06	6.3E-06	Yes	
Molybdenum	7439-98-7	3.00E+01	8 hr	ITSL	1.1E-03	1.3E-04	1.6E-05	5.0E-05	Yes	
	1313-27-5	5.00E+00	8 hr	ITSL	1.1E-03	1.3E-04	1.6E-05	5.0E-05	Yes	
		1.20E-01	Annual	IRSL	1.1E-03	1.3E-04	1.6E-05	2.7E-06	Yes	
Naphthalene	91-20-3	3.00E+00	24 hr	ITSL	6.1E-04	7.0E-05	8.8E-06	1.5E-05	Yes	
		5.20E+02	8 hr	ITSL	6.1E-04	7.0E-05	8.8E-06	2.8E-05	Yes	
		8.00E-02	Annual	IRSL	6.1E-04	7.0E-05	8.8E-06	1.5E-06	Yes	
Nickel	7440-02-0	4.20E-03	Annual	IRSL	2.1E-03	2.4E-04	3.0E-05	5.2E-06	Yes	
Pentane	109-66-0	1.77E+04	8 hr	ITSL	2.6E+00	3.0E-01	3.8E-02	1.2E-01	Yes	
Phenanthrene	85-01-8	1.00E-01	Annual	ITSL	1.7E-05	2.0E-06	2.5E-07	4.2E-08	Yes	
Pyrene	129-00-0	1.00E+02	24 hr	ITSL	5.0E-06	5.8E-07	7.2E-08	1.2E-07	Yes	
Selenium	7782-49-2	2.00E+00	8 hr	ITSL	2.4E-05	2.8E-06	3.5E-07	1.1E-06	Yes	
Toluene	108-88-3	5.00E+03	24 hr	ITSL	3.4E-03	3.9E-04	4.9E-05	8.3E-05	Yes	
Vanadium	7440-62-2	5.00E-01	8 hr	ITSL	2.3E-03	2.6E-04	3.3E-05	1.0E-04	Yes	(2)
Vanadium Pentoxide	1314-62-1	5.00E-01	1 hr	ITSL	2.3E-03	2.6E-04	3.3E-05	1.8E-04	Yes	
Zinc	7440-66-6	1.05E+03	24 hr	ITSL	2.9E-02	3.3E-03	4.2E-04	7.0E-04	Yes	(1)

AERMOD Concentrations, ug/m^3 (based on a 1 g/s emission rate)

	New GOHT Charge Heater
1-hour	5.30
8-hour	3.12
24-hour	1.68
annual	0.172

Daily Average Firing Duty (MMBtu/hr)

New GOHT Charge Heater: 115

Notes:

Natural gas factors listed in AP-42 Tables 1.4-3 and 1.4-4 (7/98).

1. Screening level developed according to Michigan Rule 232(1)(d).
2. Screening level developed according to Michigan Rule 232(1)(h).
3. Impacts for carcinogenic polycyclic aromatic hydrocarbons (AQD Footnote 5) were evaluated utilizing the estimated order of potential potency approach approved by the Scientific Advisory Panel at its July 20, 1995 meeting.
4. There is no published screening level for Chromium; therefore, the screening level for Chromium, trivalent (16065-83-1) was used.
5. Screening level is for 1,3-Dichlorobenzene (541-73-1).
6. Pursuant to Footnote 7 of the AQD's list of screening levels, emissions of mercury greater than 5 lbs/yr may be evaluated o n a case-by-case basis.

Table 19
Tier 3 Fuels Project
Air Toxic Emissions and Ambient Impact Summary
New GOHT Charge Heater Combusting Refinery Fuel Gas
Marathon Petroleum Company LP, Detroit Refinery

REFINERY FUEL GAS

Pollutant	CAS Number	Screening Level (ug/m^3)	Averaging Period	ITSL/IRSL	Emission Factor[a] (lb/MMBtu)	Emission Rate (lb/hr)	Emission Rate (g/s)	Modeled Impact at Potential Emission Rate (ug/m^3)	Concentration Below ITSL/IRSL?	Notes
Acetaldehyde	75-07-0	5.00E-01	Annual	IRSL	1.3E-06	1.5E-04	1.9E-05	3.2E-06	Yes	
		9.00E+00	24 hr	ITSL	1.3E-06	1.5E-04	1.9E-05	3.2E-05	Yes	
Benzene	71-43-2	1.00E-01	Annual	IRSL	4.2E-04	4.8E-02	6.1E-03	1.0E-03	Yes	
		3.00E+01	Annual	ITSL	4.2E-04	4.8E-02	6.1E-03	1.0E-03	Yes	
		3.00E+01	24-hr	ITSL	4.2E-04	4.8E-02	6.1E-03	1.0E-02	Yes	
Benzo(a)pyrene	50-32-8	5.00E-04	Annual	IRSL	1.0E-06	1.2E-04	1.5E-05	2.5E-06	Yes	
Chromium	7440-47-3	5.00E+00	8 hr	IRSL	3.0E-07	3.4E-05	4.3E-06	1.3E-05	Yes	
Chromium VI, particulate	18540-29-9	8.30E-05	Annual	IRSL	7.0E-08	8.1E-06	1.0E-06	1.7E-07	Yes	
		8.00E-03	24-hr	ITSL	7.0E-08	8.1E-06	1.0E-06	1.7E-06	Yes	
Chrysene	218-01-9	5.00E-01	Annual	IRSL	4.0E-07	4.6E-05	5.8E-06	1.0E-06	Yes	(1)
Copper	7440-50-8	2.00E+00	8 hr	ITSL	2.2E-07	2.5E-05	3.2E-06	9.9E-06	Yes	
Fluoranthene	206-44-0	1.40E+02	24 hr	ITSL	1.9E-06	2.2E-04	2.7E-05	4.6E-05	Yes	
Formaldehyde	50-00-0	8.00E-02	Annual	IRSL	6.3E-05	7.2E-03	9.1E-04	1.6E-04	Yes	
		3.00E+01	24 hr	ITSL	6.1E-06	7.0E-04	8.8E-05	1.5E-04	Yes	
Manganese	7439-96-5	3.00E-01	Annual	ITSL	1.6E-06	1.8E-04	2.3E-05	4.0E-06	Yes	
Mercury	7439-97-6	3.00E-01	Annual	ITSL	4.2E-07	4.9E-05	6.1E-06	1.1E-06	Yes	(2)
		1.00E+00	24 hr	ITSL	4.2E-07	4.9E-05	6.1E-06	1.0E-05	Yes	
Naphthalene	91-20-3	8.00E-02	Annual	IRSL	1.6E-06	1.8E-04	2.3E-05	4.0E-06	Yes	
		5.20E+02	8 hr	ITSL	1.6E-06	1.8E-04	2.3E-05	7.2E-05	Yes	
		3.00E+00	Annual	ITSL	1.6E-06	1.8E-04	2.3E-05	4.0E-06	Yes	
Nickel	7440-02-0	4.20E-03	Annual	IRSL	1.4E-06	1.6E-04	2.0E-05	3.5E-06	Yes	
Phenol	108-95-2	1.90E+02	8 hr	ITSL	1.1E-02	1.2E+00	1.5E-01	4.7E-01	Yes	
Sulfuric Acid Mist	7664-93-9	1.00E+00	Annual	ITSL	1.4E-06	1.6E-04	2.0E-05	3.5E-06	Yes	(3)
		1.20E+02	1 hr	ITSL	1.1E-02	1.2E+00	1.5E-01	8.1E-01	Yes	
Toluene	108-88-3	5.00E+03	24 hr	ITSL	7.1E-04	8.2E-02	1.0E-02	1.7E-02	Yes	

AERMOD Concentrations, ug/m^3 (based on a 1 g/s emission rate)

	New GOHT Charge Heater
1-hour	5.30
8-hour	3.12
24-hour	1.68
annual	0.172

Daily Average Firing Duty (MMBtu/hr)

New GOHT Charge Heaer:	115

Notes:

Refinery gas emission factors listed in FIRE 6.22 under SCC 10200701.

1. Impacts for carcinogenic polycyclic aromatic hydrocarbons (AQD Footnote 5) were evaluated utilizing the estimated order of potential potency approach approved by the Scientific Advisory Panel at its July 20, 1995 meeting.
2. Pursuant to Footnote 7 of the AQD's list of screening levels, emissions of mercury greater than 5 lbs/yr may be evaluated on a case-by-case basis.
3. Consistent with the methodology summarized in Table 3-8, the Sulfuric Acid emission rate was estimated by assuming that 5% of fuel sulfur will be converted to SO3 and 100% of the SO_3 will be converted to sulfuric acid mist.

Table 20
Tier 3 Fuels Project
Air Toxic Emissions and Ambient Impact Summary - PAH Impacts
New GOHT Charge Heater Combusting either Natural Gas or Refinery Fuel Gas
Marathon Petroleum Company LP, Detroit Refinery

Polycylic Aromatic Hydrocarbon	CAS Number	Maximum Annual Impact ($\mu g/m^3$)	Estimated Relative Potency	Potency for Benzo(a)pyrene	Risk	Risk Less Than One in a Million?
Benzo(a)anthracene	56-55-3	4.5E-09	0.1	0.0021	9.4E-13	Yes
Benzo(a)pyrene	50-32-8	2.5E-06	1	0.0021	5.4E-09	Yes
Benzo(b)fluoranthene	205-82-3	4.5E-09	0.1	0.0021	9.4E-13	Yes
Benzo(k)fluoranthene	207-08-9	4.5E-09	0.01	0.0021	9.4E-14	Yes
Chrysene	218-01-9	1.0E-06	0.001	0.0021	2.1E-12	Yes
Dibenzo(a,h)anthracene	53-70-3	3.0E-09	1	0.0021	6.3E-12	Yes
3-Methylchloranthrene	56-49-5	4.5E-09	1	0.0021	9.4E-12	Yes
7,12-Dimethylbenz(a)anthracene	57-97-6	4.0E-08	1	0.0021	8.4E-11	Yes
Indeno(1,2,3-cd)pyrene	193-39-5	4.5E-09	0.1	0.0021	9.4E-13	Yes
				Total Risk:	**5.5E-09**	

Notes:
1. The screening level for the nine carcinogenic polycyclic aromatic hydrocarbons (PAHs) was determined by methods utilizing the estimated order of potential potency approved by the Scientific Advisory Panel at the July 20, 1995 meeting.
2. U.S. EPA-published estimated relative potency values were used to estimate the PAH-specific risk. There is no known estimated relative potency value for 7,12-Dimethylbenz(a)anthracene; therefore, an estimated relative potency of 1 was conservatively applied.

ATTACHMENTS

ATTACHMENT A

PERMIT TO INSTALL APPLICATION FORM
(SUBMITTED IN THE MAY 27, 2015 APPLICATION PACKAGE)

MICHIGAN DEPARTMENT OF ENVIRONMENTAL QUALITY - AIR QUALITY DIVISION

PERMIT TO INSTALL APPLICATION

For authority to install, construct, reconstruct, relocate, or modify process, fuel-burning or refuse burning equipment and/or control equipment. Permits to install are required by administrative rules pursuant to Section 5505 of 1994 PA 451, as amended.

FOR DEQ USE
APPLICATION NUMBER

Please type or print clearly. The "Application Instructions" and "Information Required for an Administratively Complete Permit to Install Application" are available on the Air Quality Division (AQD) Permit Web Page at http://www.deq.state.mi.us/aps. Please call the AQD at 517-373-7023 if you have not been contacted within 15 days of your application submittal.

1. FACILITY CODES: State Registration Number (SRN) and North American Industry Classification System (NAICS)
   SRN: A 9 8 3 1 NAICS: 3 2 4 1 1 0
2. APPLICANT NAME: (Business License Name of Corporation, Partnership, Individual Owner, Government Agency)
   Marathon Petroleum Company LP
3. APPLICANT ADDRESS: (Number and Street)
   1300 South Fort Street
   MAIL CODE:
   CITY: (City, Village or Township) Detroit
   STATE: MI
   ZIP CODE: 48217-1294
   COUNTY: Wayne
4. EQUIPMENT OR PROCESS LOCATION: (Number and Street – if different than Item 3)
   CITY: (City, Village or Township)
   ZIP CODE:
   COUNTY:
5. GENERAL NATURE OF BUSINESS:
   Petroleum Refining
6. EQUIPMENT OR PROCESS DESCRIPTION: (A Description MUST Be Provided Here. Include Emission Unit IDs. Attach additional sheets if necessary; number and date each page of the submittal.)

   Permit to Install application covering the Tier 3 Fuels Project. A full description of the affected emission units, estimates of regulated NSR pollutant and TAC emissions, regulatory applicability analyses, and air toxic impact analyses, is provided in the attached document.
7. REASON FOR APPLICATION: (Check all that apply.)
   X INSTALLATION / CONSTRUCTION OF NEW EQUIPMENT OR PROCESS
   RECONSTRUCTION / MODIFICATION / RELOCATION OF EXISTING EQUIPMENT OR PROCESS – **DATE INSTALLED:**
   OTHER – DESCRIBE
8. IF THE EQUIPMENT OR PROCESS THAT WILL BE COVERED BY THIS PERMIT TO INSTALL (PTI) IS CURRENTLY COVERED BY ANY ACTIVE PERMITS, LIST THE PTI NUMBER(S): 63-08D
9. DOES THIS FACILITY HAVE AN EXISTING RENEWABLE OPERATING PERMIT (ROP)? ☐ NOT APPLICABLE ☐ PENDING APPLICATION ☒ YES
   PENDING APPLICATION OR ROP NUMBER: MI-ROP-A9831-2012b
10. AUTHORIZED EMPLOYEE: David T. Roland
    TITLE: MPC Investment LLC, General Partner Deputy Assistant Secretary
    PHONE NUMBER: (Include Area Code) 313-843-9100
    SIGNATURE:
    DATE: 5/27/2015
    E-MAIL ADDRESS: dtroland@marathonpetroleum.com
11. CONTACT: (If different than Authorized Employee. The person to contact with questions regarding this application) Jeff Bruestle
    PHONE NUMBER: (Include Area Code) 313-297-6068
    CONTACT AFFILIATION: Marathon Petroleum Company LP
    E-MAIL ADDRESS: jlbruestle@marathonpetroleum.com
12. IS THE CONTACT PERSON AUTHORIZED TO NEGOTIATE THE TERMS AND CONDITIONS OF THE PERMIT TO INSTALL? ☒ YES ☐ NO

FOR DEQ USE ONLY - DO NOT WRITE BELOW

DATE OF RECEIPT OF ALL INFORMATION REQUIRED BY RULE 203:	
DATE PERMIT TO INSTALL APPROVED:	SIGNATURE:
DATE APPLICATION / PTI VOIDED:	SIGNATURE:
DATE APPLICATION DENIED:	SIGNATURE:

A PERMIT CERTIFICATE WILL BE ISSUED UPON APPROVAL OF A PERMIT TO INSTALL

EQP 5615E (Rev. 09/2006)

ATTACHMENT B

GOHT UNIT – SYSTEM SKETCH AND EQUIPMENT LAYOUT)

REACTOR ISOLATION
w/ Seperate Fired Heaters

Denotes new equipment

Denotes new valves

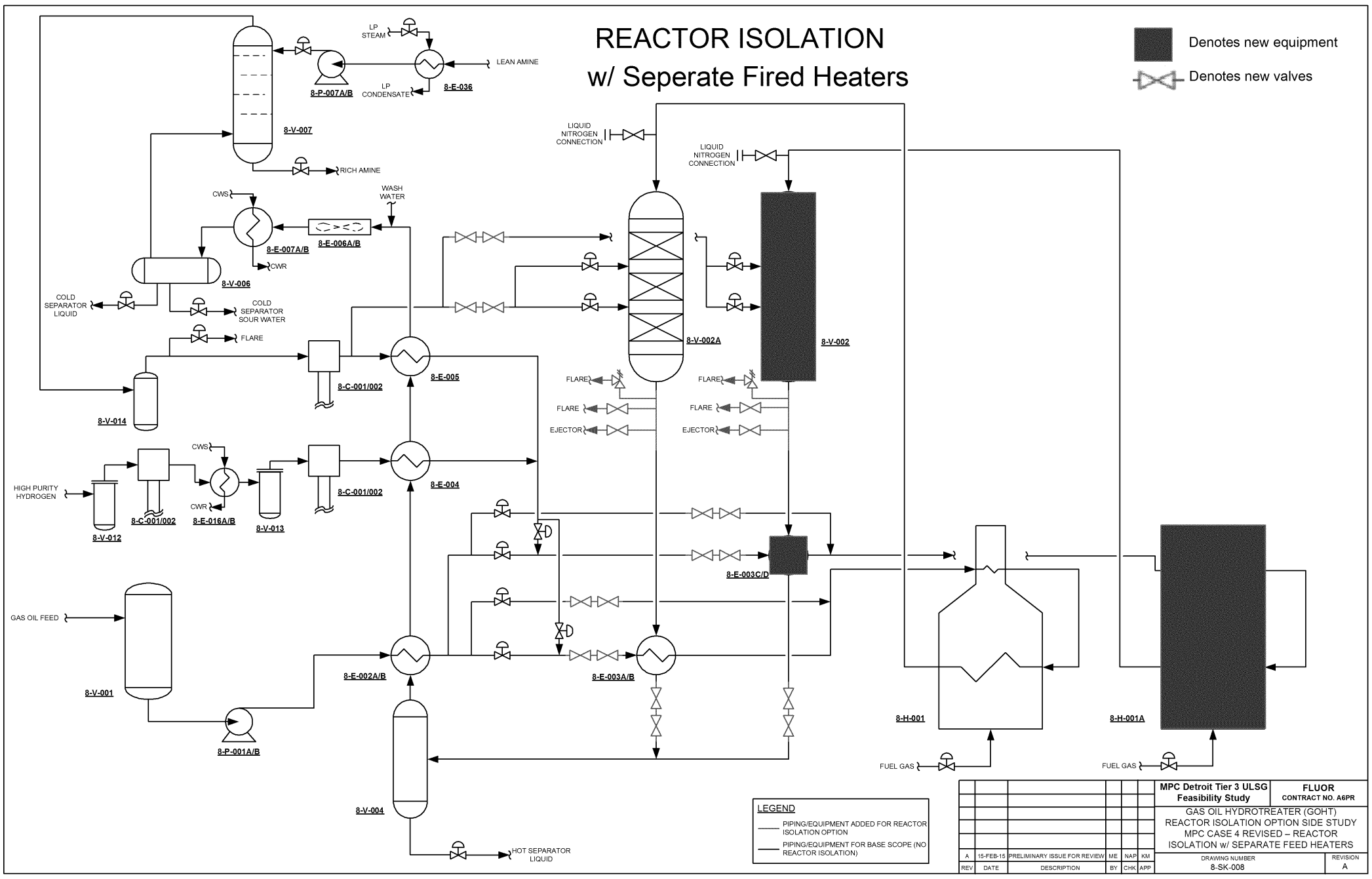

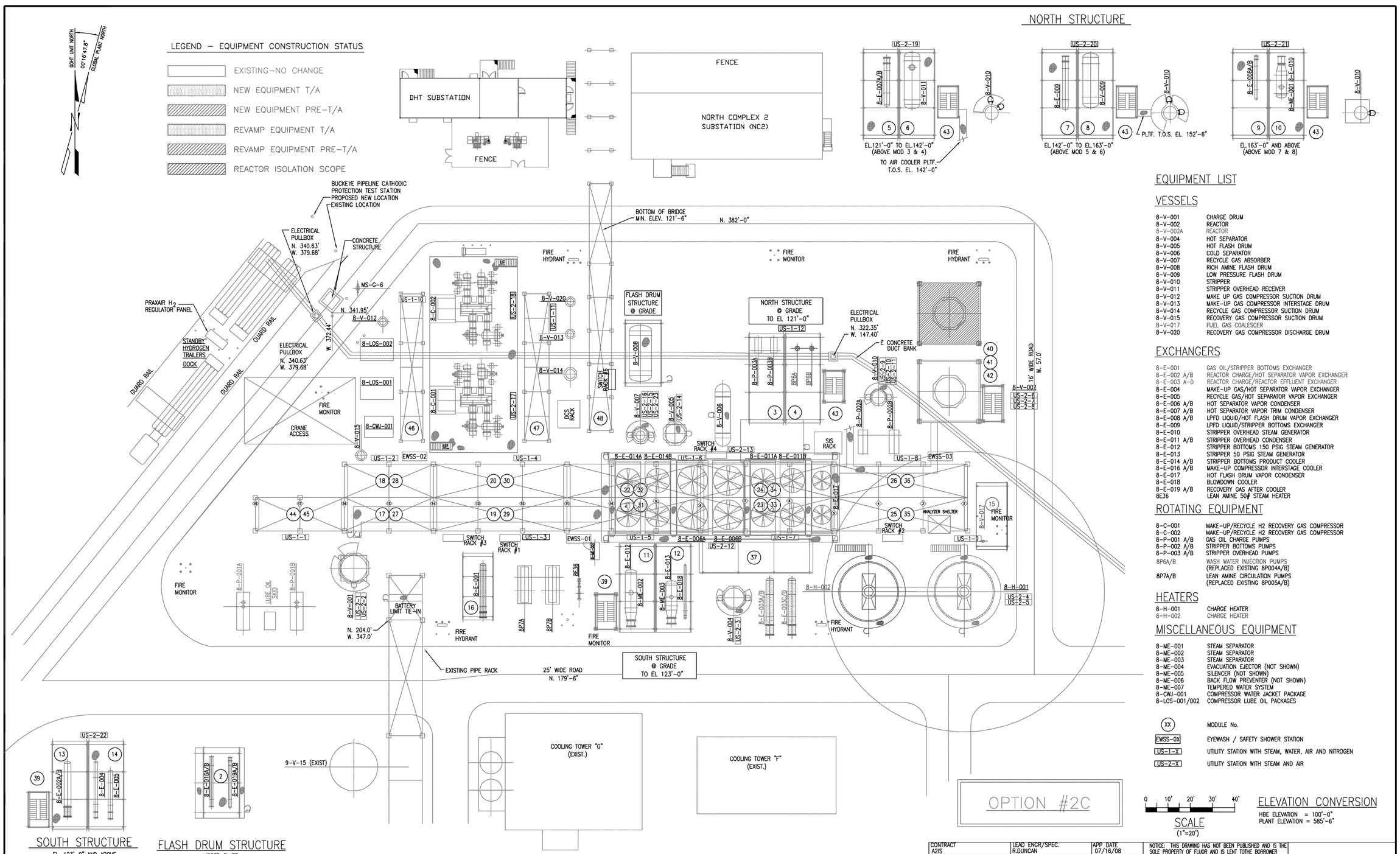

EQUIPMENT LIST

VESSELS

8–V–001	CHARGE DRUM
8–V–002	REACTOR
8–V–002A	REACTOR
8–V–004	HOT SEPARATOR
8–V–005	HOT FLASH DRUM
8–V–006	COLD SEPARATOR
8–V–007	RECYCLE GAS ABSORBER
8–V–008	RICH AMINE FLASH DRUM
8–V–009	LOW PRESSURE FLASH DRUM
8–V–010	STRIPPER
8–V–011	STRIPPER OVERHEAD RECEIVER
8–V–012	MAKE UP GAS COMPRESSOR SUCTION DRUM
8–V–013	MAKE–UP GAS COMPRESSOR INTERSTAGE DRUM
8–V–014	RECYCLE GAS COMPRESSOR SUCTION DRUM
8–V–015	RECOVERY GAS COMPRESSOR SUCTION DRUM
8–V–017	FUEL GAS COALESCER
8–V–020	RECOVERY GAS COMPRESSOR DISCHARGE DRUM

EXCHANGERS

8–E–001	GAS OIL/STRIPPER BOTTOMS EXCHANGER
8–E–002 A/B	REACTOR CHARGE/HOT SEPARATOR VAPOR EXCHANGER
8–E–003 A–D	REACTOR CHARGE/REACTOR EFFLUENT EXCHANGER
8–E–004	MAKE–UP GAS/HOT SEPARATOR VAPOR EXCHANGER
8–E–005	RECYCLE GAS/HOT SEPARATOR VAPOR EXCHANGER
8–E–006 A/B	HOT SEPARATOR VAPOR CONDENSER
8–E–007 A/B	HOT SEPARATOR VAPOR TRIM CONDENSER
8–E–008 A/B	LPFD LIQUID/HOT FLASH DRUM VAPOR EXCHANGER
8–E–009	LPFD LIQUID/STRIPPER BOTTOMS EXCHANGER
8–E–010	STRIPPER OVERHEAD STEAM GENERATOR
8–E–011 A/B	STRIPPER OVERHEAD CONDENSER
8–E–012	STRIPPER BOTTOMS 150 PSIG STEAM GENERATOR
8–E–013	STRIPPER 50 PSIG STEAM GENERATOR
8–E–014 A/B	STRIPPER BOTTOMS PRODUCT COOLER
8–E–016 A/B	MAKE–UP COMPRESSOR INTERSTAGE COOLER
8–E–017	HOT FLASH DRUM VAPOR CONDENSER
8–E–018	BLOWDOWN COOLER
8–E–019 A/B	RECOVERY GAS AFTER COOLER
8E36	LEAN AMINE 50# STEAM HEATER

ROTATING EQUIPMENT

8–C–001	MAKE–UP/RECYCLE H2 RECOVERY GAS COMPRESSOR
8–C–002	MAKE–UP/RECYCLE H2 RECOVERY GAS COMPRESSOR
8–P–001 A/B	GAS OIL CHARGE PUMPS
8–P–002 A/B	STRIPPER BOTTOMS PUMPS
8–P–003 A/B	STRIPPER OVERHEAD PUMPS
8P6A/B	WASH WATER INJECTION PUMPS (REPLACED EXISTING 8P004A/B)
8P7A/B	LEAN AMINE CIRCULATION PUMPS (REPLACED EXISTING 8P005A/B)

HEATERS

8–H–001	CHARGE HEATER
8–H–002	CHARGE HEATER

MISCELLANEOUS EQUIPMENT

8–ME–001	STEAM SEPARATOR
8–ME–002	STEAM SEPARATOR
8–ME–003	STEAM SEPARATOR
8–ME–004	EVACUATION EJECTOR (NOT SHOWN)
8–ME–005	SILENCER (NOT SHOWN)
8–ME–006	BACK FLOW PREVENTER (NOT SHOWN)
8–ME–007	TEMPERED WATER SYSTEM
8–CWJ–001	COMPRESSOR WATER JACKET PACKAGE
8–LOS–001/002	COMPRESSOR LUBE OIL PACKAGES

(XX)	MODULE No.
EWSS–0X	EYEWASH / SAFETY SHOWER STATION
US–1–X	UTILITY STATION WITH STEAM, WATER, AIR AND NITROGEN
US–2–X	UTILITY STATION WITH STEAM AND AIR

CONTRACT A2IS	LEAD ENGR/SPEC. R.DUNCAN	APP DATE 07/16/08	
DESIGNED BY A.SABBAH	FLUOR G.BARAUSKAS	APP DATE 07/16/08	
CHECKED BY H.BORGE	LICENSOR	APP DATE	
	CLIENT B.RUFFNER	APP DATE 07/16/08	

NOTICE: THIS DRAWING HAS NOT BEEN PUBLISHED AND IS THE SOLE PROPERTY OF FLUOR AND IS LENT TOTHE BORROWER FOR THEIR CONFIDENTIAL USE ONLY, AND IN CONSIDERATION OF THE LOAN OF THIS DRAWING, THE BORROWER PROMISES AND AGREES TO RETURN IT UPON REQUEST AND AGREES THAT IT WILL NOT BE REPRODUCED, COPIED, LENT OR OTHERWISE DISPOSED OF DIRECTLY OR INDIRECTLY, NOR USED FOR ANY PURPOSE OTHER THAN THAT FOR WHICH IT IS FURNISHED.

FLUOR.

NO.	DATE	BY	REVISIONS	CK.	APP.
4–2	12/23/08	AS	REVISED LOCATION 08–E36 & ANAL. SHELTER	HB	JK
4–3	01/12/10	AS	ISSUED FOR CONSTRUCTION	HB	JK
4–4	07/12/10	AS	ISSUED FOR CONSTRUCTION 2010/2012 SCOPE SHIFT	HB	JK
4–5	11/11/10	JB	ISSUED FOR REMOVAL OF 8V7 & 8ME40	RD	JK
2			AS BUILT		
3	4/2007	MIDD	ADDED STANDBY HYDROGEN TRAILERS DOCK		
4	4/17/08	AS	ISSUED FOR REVIEW & COMMENT	HB	JK
4–1	7/16/08	AS		HB	JK
4–5B		RJM	ULSG STUDY OPTION #2		
E	2–17–04	JDG	ISSUED FOR DESIGN	HANK	MNC
0	4–7–04	JDG	ISSUED FOR CONSTRUCTION	HANK	MNC
1	7–21–04	JDG	REVISED AS NOTED	HANK	MNC

REFERENCE DWG.	DESCRIPTION
D8–100 SH.04 THRU 07	EQUIPMENT LOCATION
D25–1839 SHT.1&2	DHOUP UNIT COORDINATE SYSTEM

Marathon Petroleum Company LLC

MICHIGAN REFINING DIVISION

PLOT PLAN
GOHT UNIT
ISBL EQUIPMENT ARRANGEMENT

DRAWN: HANK	DATE: 11/12/03
CHECKED BY: JDC	APPROVED BY: MNC
SCALE: 1"=20'–0"	UNIT: 8
AFE NO. 571	CHARGE NO. _
DRAWING # D8–100 SH. 01	REV. 4–5B

DISTRIBUTION CODE: 051

PLOT DATE: $$$$date$time$$$$
FILENAME: $dgnspec$
PLOTTED BY: $username$

ATTACHMENT C

DISPERSION MODELING INPUT/OUTPUT FILES ON CD-ROM
(SUBMITTED TO THE AQD VIA WEB-BASED SERVER)