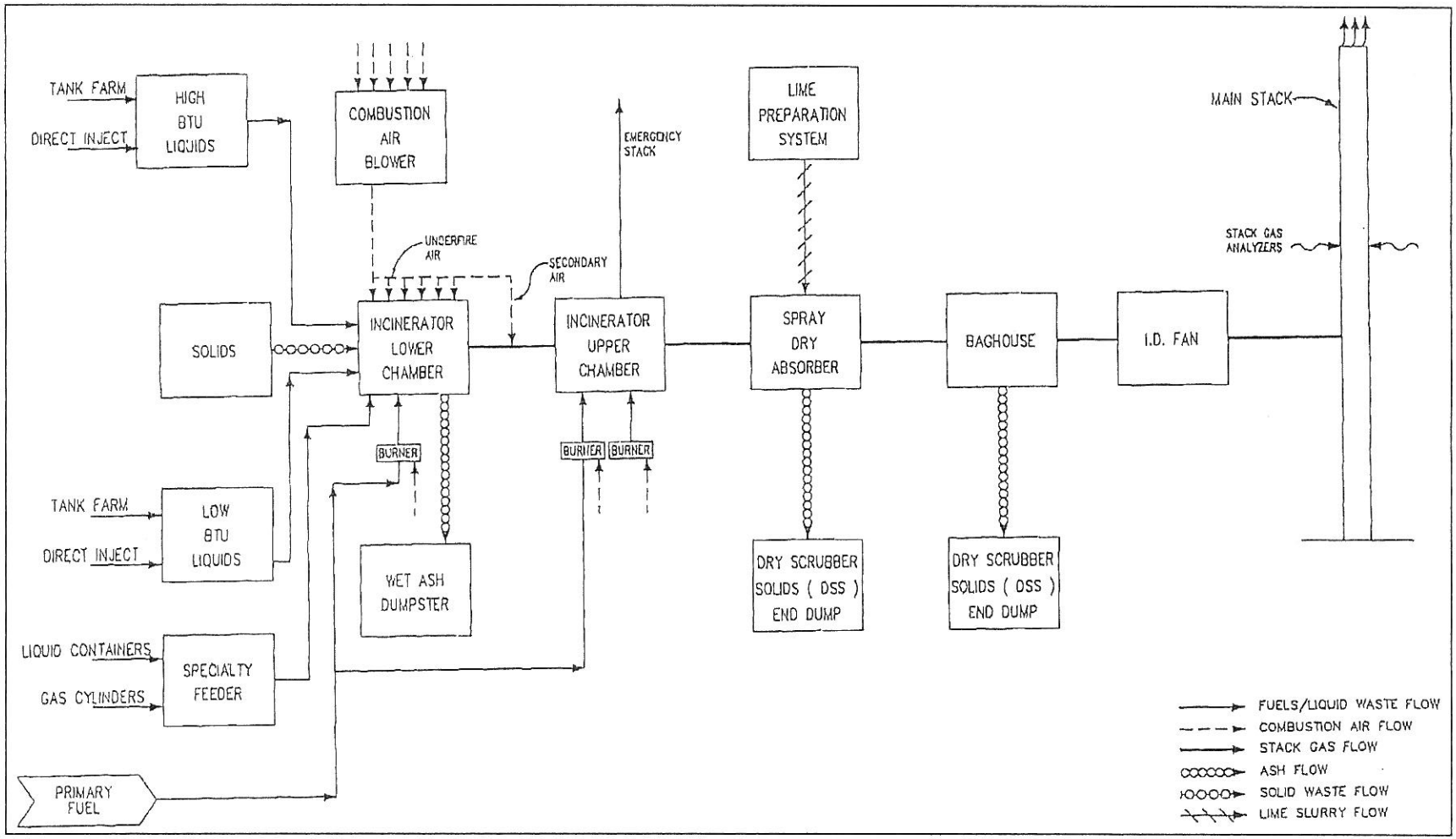

Figure 3-1. Unit 2 Process Flow Diagram

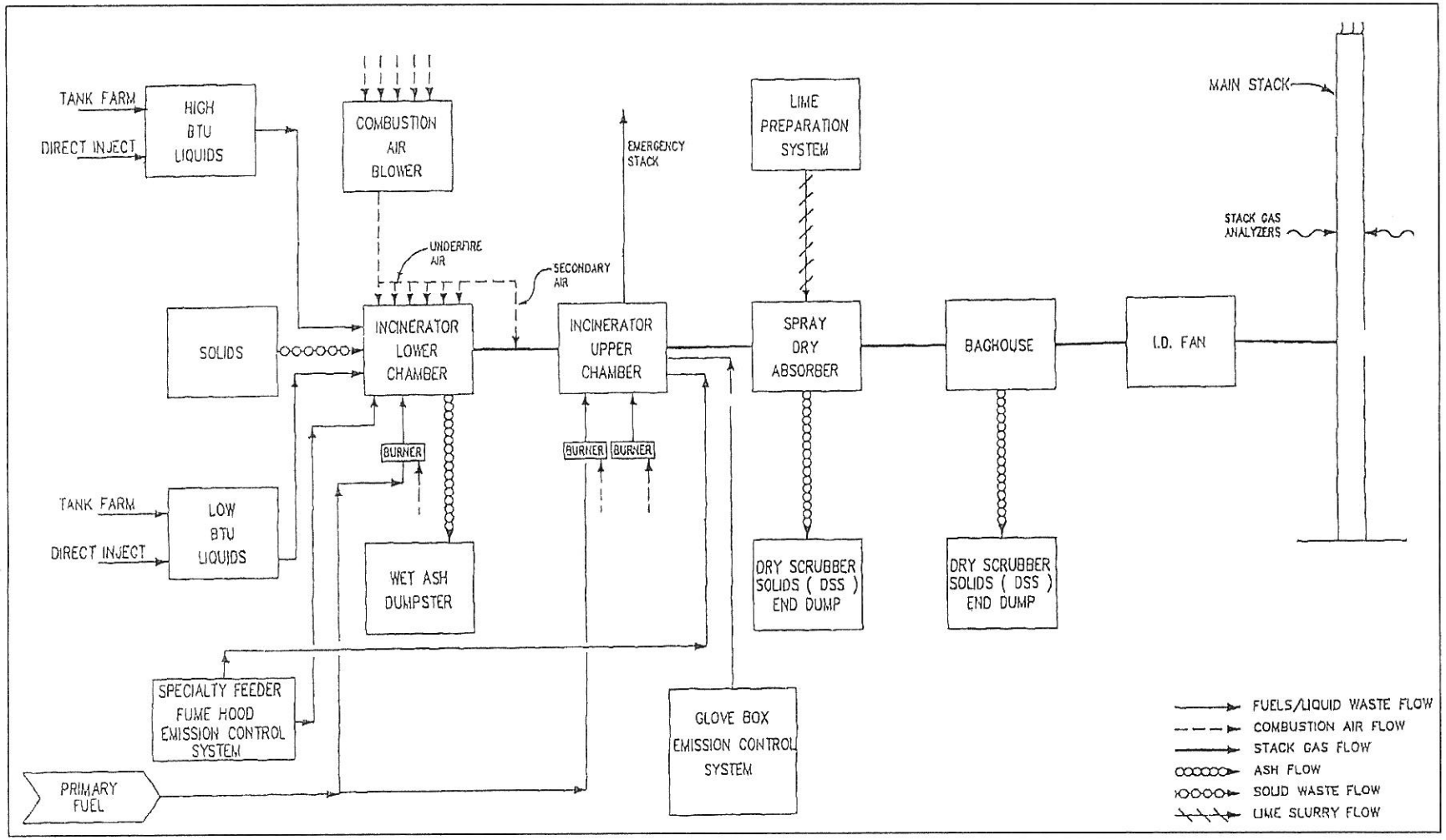

Figure 3-1. Unit 3 Process Flow Diagram

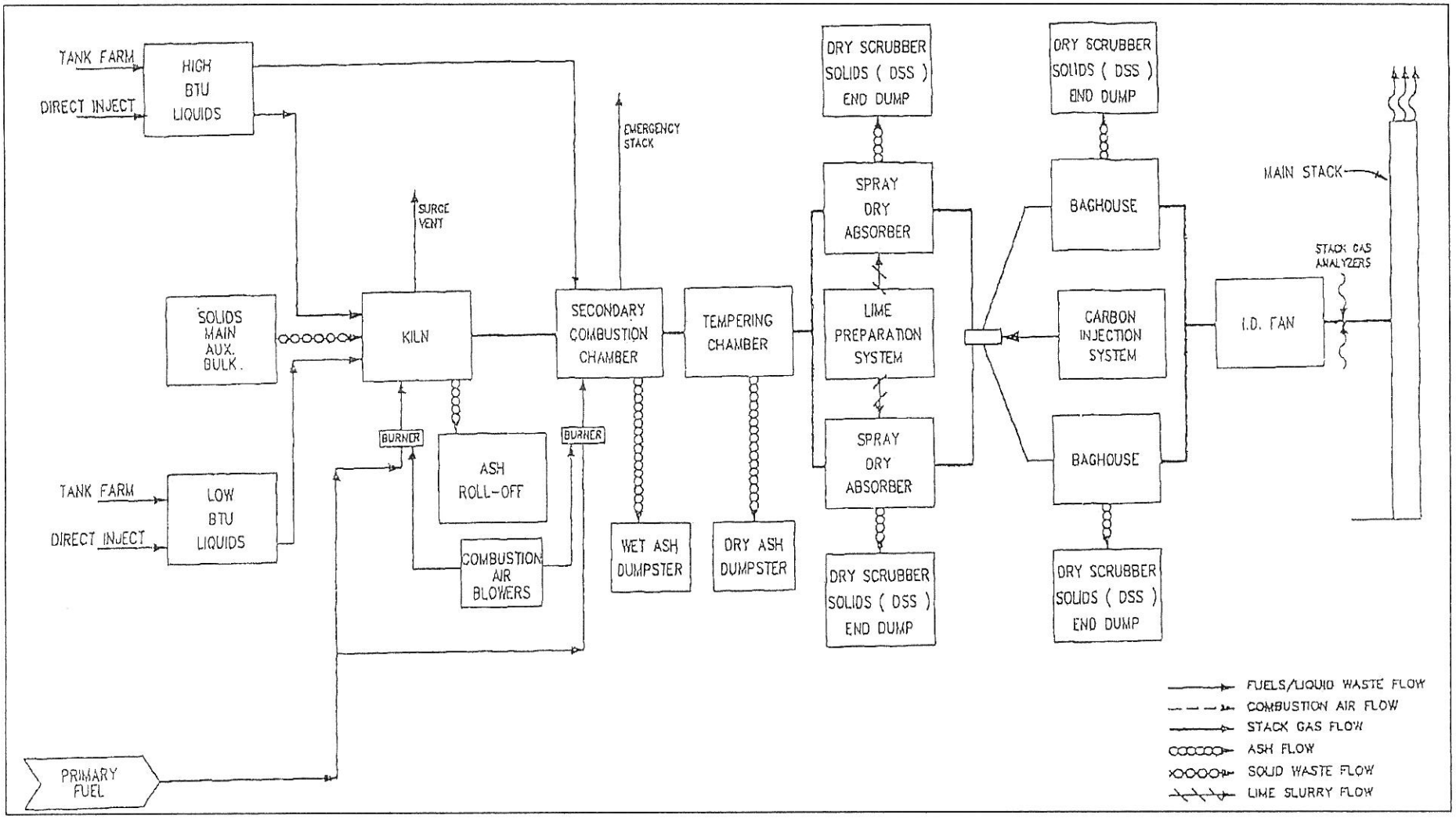

Figure 3-1. Unit 4 Process Flow Diagram