SPM Single Point Monitor

Honeywell

Technical Handbook

- TOC
- Operation
- Installation
- Maintenance
- Specifications
- Options
- Bi-Directional Communications
- Warranty Statement

Your Uptime Is Our Top Priority

Because your uptime is our top priority, Honeywell Analytics Inc. provides you with a 24-hour Emergency Service Hotline.

During Business Hours: Honeywell Analytics, Inc. (U.S.A.)
Corporate Headquarters:

847-955-8200
(Toll-Free) 800-323-2000

www.honeywellanalytics.com

24-Hour Emergency Hotline:
847-634-2840

Record your serial number and installation date for easy reference. To save time when calling for service, please have the serial number of your instrument available.

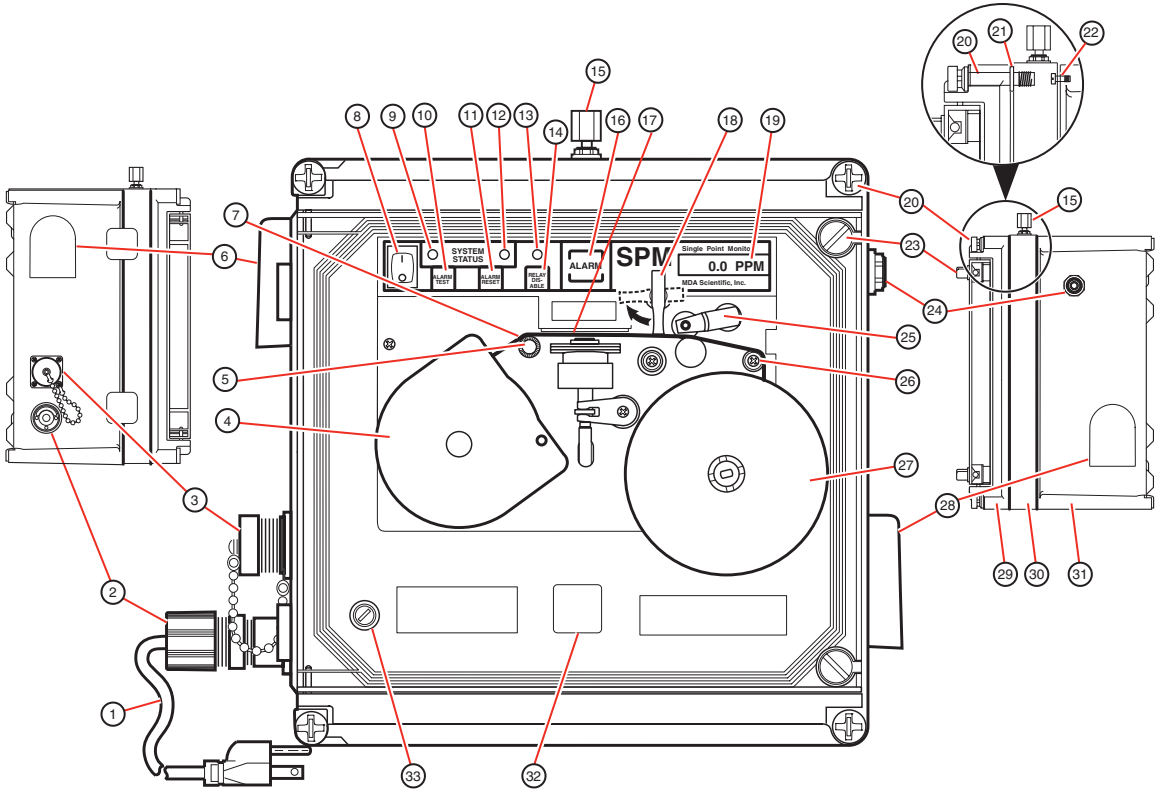

1. Line power cord
2. Power port
3. 14-pin circular connector
4. Chemcassette®
5. Guide post
6. Vent
7. Tape path
8. Main power switch
9. Green system status LED
10. Alarm test key
11. Alarm reset key
12. Red system status LED
13. Red Relay disable LED
14. Relay disable key
15. Sample inlet port
16. Alarm lamp
17. Detector head
18. Tape load lever
19. Digital display
20. Cover screw
21. Retaining ring
22. Collar fixing screw
23. Door thumbscrew
24. Exhaust port
25. Capstan assembly
26. Guide post
27. Take-up reel
28. Vent
29. Cover
30. Collar
31. Body
32. Chemkey slot
33. Fuse/fuse holder

Note: Features may vary depending on instrument options.

Table of Contents

1 Operation

1.1 Introduction 1-2
1.2 Master SPM Illustration 1-2
1.3 Before You Begin 1-2
1.4 Switching Instrument On and Off 1-2
1.5 Loading the Chemcassette® Detection Tape 1-3
1.6 Monitoring 1-3
1.7 Simulating Gas Conditions 1-3
1.7.1 Alarm Relays 1-3
1.7.2 Gross Alarm Simulation 1-3
1.7.3 Full Alarm Simulation 1-4
1.7.4 Alarm Simulation Key Entries 1-4
1.7.5 Alarm Simulation Reporting 1-4
1.8 Verifying System Response 1-5
1.8.1 Improper System Response 1-5
1.8.2 Open Tape Load Lever Fault 1-5
1.9 Gas Concentration Conditions 1-6
1.9.1 Gas Condition Reporting 1-6
1.10 Instrument Fault Condition 1-6
1.11 Disabling the External Alarm Relay Contact 1-6

2 Installation

2.1 Wall Mounting 2-2
2.2 Connecting the Power Cord 2-2
2.3 Connecting Sample and Exhaust Lines 2-3
2.3.1 Sample Line 2-3
2.3.2 Particulate Filter 2-3
2.3.3 Acid Scrubbing Filters 2-3
2.3.4 Hydrogen Sulfide (H_2S) Scrubber Filter 2-4

2.3.5 Exhaust Line 2-4
2.3.6 High Pressure Locations 2-4
2.4 SPM Output Connections 2-4
2.4.1 Output Pin Designations 2-4
2.5 How to Open Instrument Cover 2-5
3 Maintenance
3.1 Routine Maintenance Schedule 3-2
3.2 Chemcassette® Replacement 3-2
3.3 Verify System Response 3-2
3.4 Replacing Internal Filters 3-2
3.5 Replacing the Fuse 3-3
3.6 Caring for Chemcassettes® 3-3
3.7 Removing a Used Chemcassette® 3-4
3.8 Troubleshooting Guide 3-4
4 Specifications
4.1 General Instrument Specifications 4-2
4.2 4-20 mA Output Signal 4-2
4.3 Verifying the 4-20 mA Output Signal 4-2
4.4 Output Signals 4-3
4.5 Status Indicators 4-6
4.6 Display Messages 4-6
4.7 Fault Codes 4-7
4.8 Output Terminal Status 4-8
4.9 Gas Response Specifications 4-9
4.10 Sample Line Limitations 4-12
4.11 Particulate Filters 4-12
5 Options
5.1 AccuPulse Dilution System 5-2
5.1.1 AccuPulse Installation 5-2
5.2 Z-Purge System Option 5-2
5.2.1 Purge Installation 5-2

5.2.2 User Responsibility 5-3
5.2.4 Electrical Connection 5-4
5.2.5 Opening Z-Purge Enclosure 5-4
5.2.6 Output Connections 5-5
5.2.7 Z-Purge Servicing and Power-up Procedures 5-6
5.2.8 Z-Purge Troubleshooting 5-7
5.3 Duty Cycle Option 5-7
5.3.1 Duty Cycle Intervals 5-7
5.3.2 Setting the Duty Cycle 5-7
5.3.3 Duty Cycle Concentration Reporting 5-8
5.4 ChemKey Option 5-8
5.4.1 ChemKey Components 5-8
5.4.2 SPM Legend (71) 5-8
5.4.3 Gas Symbol/Name (72) 5-8
5.4.4 Alarm Levels (73) 5-8
5.4.5 Family Chemcassettes® 5-9
5.4.6 Sample Lines 5-9
5.4.7 ChemKey Operation 5-9
5.4.8 Changing Gases 5-9
5.4.9 ChemKey Faults 5-9
5.5 RS-422 Option 5-9
5.5.1 Z-Purge SPM Connection 5-10
5.5.2 Pin Designations 5-10
5.5.3 General System Wiring 5-10
5.5.4 How to Set Date and Time 5-10
5.6 Portable Operation 5-11
5.6.1 Battery Operation 5-11
5.6.2 How to Extend Battery Life 5-11
5.6.3 Battery Power Status 5-11
5.6.4 Battery Charger 5-12
5.7 Extended Sample Option 5-12

5.7.1 Restricted Target Gases 5-12
5.7.2 Connecting the Sample Line 5-12
5.7.3 Connecting the Exhaust Line 5-12
5.8 Pole Mount Kit 5-13
5.9 Heater Option 5-13
5.9.1 Installation and Operation 5-13
5.9.2 Condensation 5-14
5.9.3 High-temperature Fault 5-14
5.10 Remote Reset Option 5-14
5.11 Two-point Operation 5-15
5.11.1 Installation 5-15
5.11.2 Operation 5-15
5.12 Non-latching Alarm Option 5-16
5.13 Remote Trigger Option 5-16
5.14 Modification for Diisocyanate Monitoring in High Humidities 5-16
A Bi-Directional Communications Protocol
A.1 Introduction A-2
A.1.1 Overview A-2
A.1.2 Communication Port A-2
A.1.4 Communication Port Timeout A-3
A.1.5 Protocol Specifics A-3
Data and Packets A-3
Check-Character (Checksum) A-4
ACK/NAK Handshake A-4
Normal Analysis Messages A-5
Errors and Faults A-5
Responses A-6
A.2 Protocol Packet Definition A-6
A.2.1 Packet Format A-6
A.4 SPM Protocol Command Parameter Format A-7
A.5 Glossary A-8

B Warranty Statement

Chemcassette® Device Warranty Statement B-2

Chemcassette® Warranty B-3

1 Operation

1.1 Introduction

The SPM combines the well-proven Chemcassette® Detection System and microprocessor control to achieve optimum detection speed, accuracy, and specificity. It responds quickly to hazardous releases, yet ignores other commonly used chemicals.

The SPM is very easy to operate and maintain. The SPM can quickly be set up for monitoring, and routine maintenance requires less than three hours annually.

These Operating Instructions provide all the information needed to operate and maintain the SPM Single Point Monitor. Read them thoroughly before using your new instrument.

1.2 Master SPM Illustration

The front of this manual contains an illustration of the SPM together with a numbered legend of all important parts and controls. Throughout the manual, parts and controls are identified with the same legend number used on the illustration.

1.3 Before You Begin

1. Read these Operating Instructions carefully.
2. Attach sample and exhaust tubing. (*Section 2.3*)
3. Connect auxiliary devices such as remote alarms. (*Section 2.4*)
4. Supply power to the instrument. (*Section 2.2*)

Warning

When monitoring for certain gases, there may be limits on the length of sample lines. See *Section 4.10* for more information.

Caution

The SPM should not be operated in direct sunlight or at elevated temperatures unless equipped with appropriate options. See *Section 4.1* for proper operating temperature range.

Caution

Except for instrument maintenance procedures covered in this manual, all repair and service work must be referred to qualified personnel.

1.4 Switching Instrument On and Off

To switch the SPM Single Point Monitor on and off, press the main power switch (8) on the front panel of the instrument. When the SPM is switched on, the digital display (19) will scroll the following information:

- Gas Type
- Alarm Levels
- Chemcassette® Type

If power is disrupted while the instrument is monitoring, it will automatically resume monitoring when power is restored.

Whenever the SPM has been switched off for more than two hours, advance the Chemcassette® tape (7) a few inches to position fresh tape in the detector head (17). To manually advance the tape, open the tape load lever (18) and rotate the take-up reel (27) clockwise.

Note:

For ChemKey operation only—Some newer ChemKeys will require a Chemcassette® that may not be recognized by the instrument. In these cases, the SPM will display (Unknown Chemcassette®) or (Proper Chemcassette®). However, your ChemKey unit will function correctly if the correct Chemcassette® is installed.

1.5 Loading the Chemcassette® Detection Tape

Load a fresh Chemcassette® as follows:

1. Open the tape load lever (18).
   - The green system status LED (9) will flash slowly.
   - AC Line (1) instruments will display (AC LINE) on the digital display (19). Battery powered instruments will display current battery condition.
2. Remove the center retaining screw securing the Chemcassette®. Remove and discard the old Chemcassette®.
3. Install the fresh Chemcassette® (4) with raised lettering facing up. Pull 30 cm (12 inches) of tape (7) out of the fresh Chemcassette® (4). Place the end of the tape in the slot on the Chemcassette® take-up reel cover (27).
4. Thread the Chemcassette® tape (7) through the detector head (17), capstan assembly (25), and over the guide posts (5 and 26).

Note:

The EP (30 Day) or XPS (Extended Play) Chemcassette® will lock in position when tape outlet is at approximately the one o'clock position. The SP (Standard Play) Chemcassette® should be positioned as shown in the Master SPM Illustration.

5. Install the take-up reel cover (27).
6. Rotate the assembled take-up reel (27) clockwise to take up any slack.
7. Install the Chemcassette® center retaining screw.
8. Close the tape load lever (18). The SPM will automatically begin monitoring.

1.6 Monitoring

The SPM is monitoring whenever a Chemcassette® (4) is in place, the tape load lever (18) is closed, and the power switch (8) on. The green system status LED (9) will also be lighted.

1.7 Simulating Gas Conditions

The SPM allows two different electronic simulations of gas conditions: a gross alarm simulation (Section 1.7.2) and a full alarm simulation (*Section 1.7.3*).

1.7.1 Alarm Relays

Gross alarm simulation and full alarm simulation will activate the alarm relays. All external devices connected to the alarm relays will be triggered. To disable relays, press the relay disable key (14). The relay disable LED (13) will be lighted whenever the alarm relay contacts have been disabled.

1.7.2 Gross Alarm Simulation

To make a gross alarm simulation, press the alarm test key (10). This test activates the audible alarm and lights the alarm lamp (16). Unless the relay disable key (14) has been pressed, the gross alarm simulation energizes the alarm relay contacts. The 4-20 mA output does not change.

To reset the alarm, press the alarm reset key (11).

1.7.3 Full Alarm Simulation

A full alarm simulation duplicates the SPM response to four gas conditions:

- Sub-alarm Concentration
- Above Alarm Level 1
- Above Alarm Level 2
- Above Full Scale

To begin a full alarm simulation, the SPM needs to be in Monitor Mode. Press and hold the alarm reset key (11) for two seconds until the red system status LED (12) is flashing. The red system status LED will flash until the alarm test key is pressed or the instrument ends its current sample period.

For a simulation of each of the four gas conditions, continue with key entries as listed in Section 1.7.4.

1.7.4 Alarm Simulation Key Entries

Level	Entry	Exit
Sub-alarm	AT	After displaying concentration, the unit automatically returns to monitoring.
Alarm Level 1	AR, AT	AR
Alarm Level 2	AR, AR, AT	AR
Above Scale	AR, AR, AR, AT	AR
AT = Alarm Test Key (10) AR = Alarm Reset Key (11)		

Only one simulation can be made at a time. Conclude a simulation by pressing the alarm reset key (11). This will reset the relays, but the 4-20 mA output doesn't reset until the sample period ends. The display also acts the same way. Re-enter the alarm simulation routine by pressing and holding the alarm reset key (11) until the red system status LED (12) begins flashing.

When a simulation is concluded, the relay contacts will reset. The 4-20 mA signal and displayed value will stay at the simulated level. When the current sample period is completed the 4-20 mA signal and displayed value will be updated to indicate the sampled gas concentration.

Section 1.7.5 shows the SPM alarms and signals for each level of alarm simulation.

1.7.5 Alarm Simulation Reporting

	Green System Status LED (9)	Red System Status LED (12)	Alarm LED (16)	Audio Signal	Display (19)
Sub-alarm	Steady On	Off	Off	Off	Concentration below alarm level 1
Alarm 1	Steady On	Off	Steady On	On	Concentration just above level 1
Alarm 2	Steady On	Off	Flashing Fast	On	Concentration between alarm level 2 and full scale
Above Scale	Steady On	Off	Flashing Fast	On	xxx + ppb/ppm (above full scale)

Notes:

1. Press the alarm reset key (11) to reset all alarm indicators.
2. In actual gas condition, the display (19) will show last sampled concentration. In simulated gas condition, the display (19) will normally reset to 0 unless a concentration is detected.
3. When the unit is above scale, the display (19) will show xxx + ppb/ppm, e.g.: AsH_3 above full scale is 150 + ppb; Cl2 above full scale is 1.50 + ppm.

1.8 Verifying System Response

The verification routine checks the operating condition of the SPM optical system through use of the optical test card supplied with the instrument. The instrument must be in Monitor Mode to start this test, and if the unit has the ChemKey option, the ChemKey must be installed and turned on.

Perform the verification routine as follows:

1. Open the tape load lever (18). Remove the Chemcassette® (4) from the detector head (17).
2. Press alarm test (10). The green system status LED (9) will flash rapidly and the display will show (VERIFY).
3. Insert the test card with position #1 centered in the detector head (17). Be sure that the colored chip on the test card faces up and that the card is inserted fully into the detector head (17).
4. Close the tape load lever (18) and press alarm test key (10). The audible alarm will emit one short signal.
5. Open the tape load lever (18) and reverse the test card, centering position #2 in the detector head (17).
6. Close the tape load lever (18) and press alarm test key (10).
7. If all electronics and optical systems are operating properly, the instrument will simulate an alarm condition and activate both the audible and visual alarms. The 4-20 mA circuit will output a signal of 10.1 mA to 13.2 mA.

Note:

Alarm relays will not activate during the verification routine.

8. Open the tape load lever (18) and press alarm reset (11). Replace the Chemcassette® (4) and re-thread the tape (7). After pressing the alarm reset button, the alarm lamp (16) does not extinguish. Wait until monitoring is resumed, then press the alarm reset button again.
9. Close the tape load lever (18). The SPM will automatically begin monitoring.
10. Press the alarm reset button to turn off the alarm lamp (16).
11. Plug the end of sample line. A fault #17 will be generated, indicating that there are no leaks between the sampling point and SPM.

1.8.1 Improper System Response

If the system is not operating properly, the audible alarm will signal two times and the red system status LED (12) will light.

If this occurs, open tape load lever (18), press alarm reset (11), ensure that the colored chips on the test card are clean and repeat the verification procedure. If the system still indicates a malfunction, contact Honeywell Analytics Service for assistance.

1.8.2 Open Tape Load Lever Fault

An internal timer is activated when you open the tape load lever (18) for the verification routine. If the lever is not closed within two minutes, the:

- red system status LED (12) will flash
- audible alarm will sound
- green system status LED (9) also flashes
- SPM display will show (FAULT 25)
- instrument fault relay is activated (de-energized)

Do not confuse this two-minute alarm with the proper response to the verification routine. To prevent the two-minute alarm, do not leave the tape load lever (18) open for more than two minutes.

Note:

The two-minute alarm will also activate during Chemcassette® replacement if the tape load lever (18) is left open for more than two minutes.

1.9 Gas Concentration Conditions

Section 1.9.1 shows the SPM status reports of four actual gas concentrations.

Press alarm reset (11) to return all alarms and relay contacts back to their normal state. If the concentration condition has not been corrected, the instrument will revert to the alarm state during the next sample period.

1.9.1 Gas Condition Reporting

	Green System Status LED (9)	Red System Status LED (12)	Alarm LED (16)	Audio Signal	Display (19)
Sub-alarm	Steady On	Off	Off	Off	Actual Concentration
Alarm 1	Steady On	Off	Steady On	On	Actual Concentration
Alarm 2	Steady On	Off	Flashing Fast	On	Actual Concentration
Above Scale	Steady On	Off	Flashing Fast	On	xxx + ppb/ppm

Notes:

1. Press alarm reset (11) to reset all alarm indicators.
2. In actual gas condition, the display will show last sampled concentration. In simulated gas condition, the display will normally reset to 0 and the 4-20 mA output returns to 4 mA at the end of the sample period unless a concentration is detected.
3. When unit detects an above full scale condition, the display will show xxx + ppb/ppm, e.g.: AsH_3 above full scale is 150 + ppb; Cl2 above full scale is 1.50 +ppm.

1.10 Instrument Fault Condition

The SPM reports an instrument fault condition with flashing red and green system status LEDs (9) and (12), flashing relay disable LED (13), and an intermittent audio signal.

Note:

The relay disable LED (13) does not flash for the open tape load lever fault. (See *Section 1.8.2*).

The instrument fault relay will be activated, and the digital display (19) will show (FAULT XX). See ***Section 4.7*** for information on fault codes.

To reset the unit after a fault condition, press alarm reset (11). If the fault condition has not been corrected, the SPM will revert back to the fault reporting status.

1.11 Disabling the External Alarm Relay Contact

To disable the external concentration alarm relay contacts, press relay disable (14). The red relay disable LED (13) will light to indicate the disabled condition.

The instrument fault relay will change status whenever you disable the concentration alarm relay. This feature

insures that personnel will be alerted to any change in instrument monitoring status.

To re-enable the alarm relay contact, press relay disable (14) a second time. The red relay disable LED (13) will turn off to indicate that all the relay contacts are operational. The instrument fault relay will also reset.

Note:

> While the alarm relays are disabled, the instrument fault relay cannot be activated in the event that a fault occurs while in this mode.

2 Installation

2.1 Wall Mounting

For proper operation, place the SPM in a stable, level position protected from accidental bumps or jars. Make sure the planned installation conforms to the local wiring or installation regulations.

The SPM accessory kit contains a mounting kit for securing the unit to a wall. See ***Section 5.8*** for information on the Pole Mount Kit.

The wall mounting kit contains four stainless steel mounting brackets (41), eight flat washers, and eight screws (40). The brackets can be attached vertically or horizontally to the back of the enclosure. Use wall fasteners (not included) appropriate for the wall material.

To mount the SPM, prepare wall fasteners as indicated in the illustration. Leave screw heads loose for tightening after the unit has been positioned. Attach and tighten the brackets to the threaded inserts (42) on rear face of the enclosure. Slide the mounts over the screw heads and then fasten securely to the wall.

2.2 Connecting the Power Cord

The SPM is supplied with an IEC power line connector that plugs into any standard 120VAC electrical outlet. When fitted with the Z-Purge option, the SPM will have an explosion-proof switch and the power line should be conduit wired. See ***Section 5.2.4*** for more details. Battery Backup/Portable SPMs connect with the battery charger; see ***Section 5.6*** for more details.

To ensure proper operation of your instrument, make sure it is connected to a grounded power source.

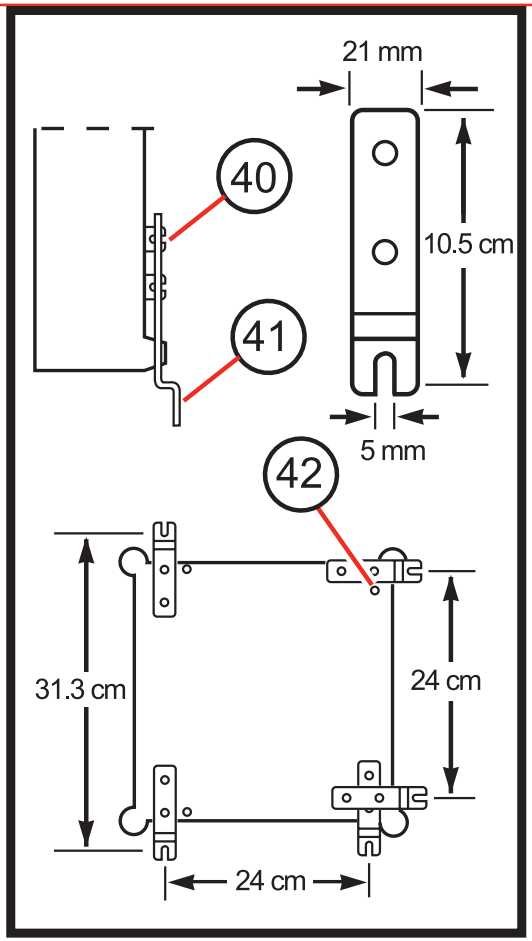

Legend

40. Mounting washers and screws
41. Mounting bracket
42. Threaded inserts

2.3 Connecting Sample and Exhaust Lines

Note:

Honeywell Analytics supplies FEP grade Teflon® tubing with all new instruments. This tubing is manufactured to our own strict specifications, and has been purged of all by-products of the manufacturing process. On occasion, users have supplied their own tubing. Should you choose to use your own tubing, be advised that some brands of FEP tubing off gas small amounts of HF, which can be detected on startup by MDA Scientific instruments configured for detecting mineral acids gases (HBr, HCl, HF, NF_3). Before enabling building alarm systems, make certain that 1) you have installed the correct Chemcassette®, and 2) your instrument reads zero.

Warning

Line lengths are limited for some target gases. See *Section 4.10* for more information.

Warning

Use only 1/8" I.D. x 1/4" O.D. FEP Teflon for sample lines, P/N 102599. Other, non-FEP Teflon sample line may absorb the target gases, causing incorrect concentrations readings.

2.3.1 Sample Line

Warning

On older units without sample fitting retainer ring, a second wrench must be used to hold the base of fitting stationary during loosening and tightening.

Insert the sample tubing into the sample inlet fitting (15). To insert tubing:

1. Loosen the sample fitting by turning the fitting counterclockwise.
2. Insert tubing until the tubing is firmly seated against the fitting body.
3. Tighten the fitting by turning the fitting clockwise until finger-tight.
4. Complete the assembly by tightening the fitting 3/4 turn (clockwise) with a wrench. Turn the fitting clockwise until the fitting holds the tubing firmly. DO NOT OVERTIGHTEN.
5. Plug the end of sample line. A fault #17 will be generated, indicating that there are no leaks between the sampling point and SPM.

If you have an instrument with the extended sample option (100 ft; 30m), refer to ***Section 5.7.2***.

2.3.2 Particulate Filter

For monitoring under particularly dirty or dusty conditions, with particle size above 0.1 micron, particulate filters (P/N 780248) may be installed on sample lines for certain gases. Some gases cannot accommodate the standard particulate filters since absorption may occur. See ***Section 4.11*** for more information.

2.3.3 Acid Scrubbing Filters

Acid Scrubbing Filters (P/N 710235) are not to be used on sample inlet lines with SPM instruments.

2.3.4 Hydrogen Sulfide (H_2S) Scrubber Filter

Hydrogen Sulfide Scrubber Filters (P/N 1295K0497) remove H_2S from the sample stream. H_2S can cross-interfere when monitoring for gases detected on the Hydrides, XP Hydrides, or the Hydrogen Cyanide Chemcassettes. Install the H_2S Scrubber Filter in the sample line as close to the instrument as possible to permit easy access for visual inspection and replacement of the filter.

2.3.5 Exhaust Line

The exhaust port (24) uses 3/16” I.D. x 1/4” O.D. polypropylene tubing.

To install exhaust tubing, push the end of the tube into the exhaust port (24) until it seats fully inside the fitting body. To release the tubing, push the small gray collar in while pulling the tubing out.

Exhaust line length may be up to 10 feet long. Also, make sure the exhaust line is vented properly.

Sample inlet and exhaust outlet tubing is supplied with the instrument.

2.3.6 High Pressure Locations

Monitoring in a location with a pressure higher than that of ambient levels may cause sample gas to be forced into the instrument and surrounding air during Chemcassette® advancement. Additional parts are required. Please contact Honeywell Analytics for application assistance.

2.4 SPM Output Connections

The gas alarm relays, instrument fault relay, and 4-20 mA output contacts are wired to a 14-pin circular connector (3). The pin designations are as listed in Section 2.4.1.

2.4.1 Output Pin Designations

Pin	Designation	Conditions
A	Instrument Fault	Normally Open
B	Instrument Fault	Common
C	Instrument Fault	Normally Closed
D	Gas Alarm 1	Normally Closed
E*	Remote Reset Option	
F	Gas Alarm 1	Common
G	Gas Alarm 1	Normally Open
H**	4-20 mA	(+)
J	Ground	
K**	4-20 mA	(-)
L	Gas Alarm 2	Normally Closed
M	Gas Alarm 2	Common
N*	Remote Reset Option	
P	Gas Alarm 2	Normally Open

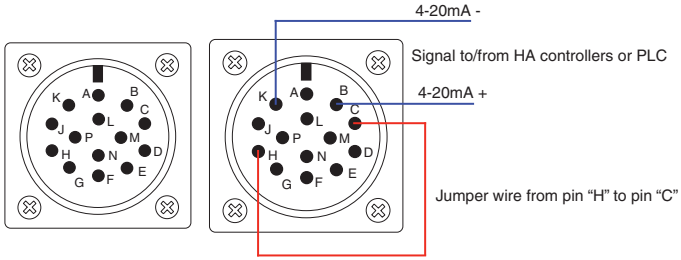

* Pins E and N will be open (i.e., no connection) except on instruments fitted with the Remote Reset option. See *Section 5.10* for more information.

** Do not connect analog devices with more than 850 ohm impedance.

Note:

The mA range is 4-20mA and does not indicate when the unit is in a Fault condition. To receive a fault indication on the mA output loop the 4-20 mA ‘+’ signal (H) through the Instrument Fault Common (B) and use the Instrument Fault Normally Closed (C) as your 4-20 mA ‘+’ signal. (See above for diagram)

2.5 How to Open Instrument Cover

The information in this section is provided to help protect against instrument damage in case of the need to open up the instrument cover and gain access to internal components.

Note:

On purged units, purge pressure will be lost if enclosure is opened.

Caution

Improper disassembly of the SPM enclosure can cause internal tubing to become detached from the sample inlet port (15) and result in loss of monitoring. To protect against instrument damage and to guard against possible loss of monitoring, never allow the cover (29) to become separated from the collar (30).

Warning

High voltage present on Line Powered units

Follow these important guidelines should it ever be necessary to open up the SPM enclosure:

- Make sure electrical power is removed.
- The cover (29) and the collar (30) must always remain connected to each other.
- During disassembly and reassembly, the connection between the cover (29) and the collar (30) must be secured by at least three cover screws (20).
- To open the hinged collar (30) from the SPM body (31), you must remove the collar fixing screws (22), one at a time.
- Observe that the collar fixing screws (22) are mounted behind the cover screws (20).
- In order to reach each collar fixing screw (22), you must temporarily remove the cover screw (20) and the retaining ring (21).
- After removing each collar fixing screw (22) and retaining ring (21), replace each cover screw (20) in order to keep the collar (30) and the cover (29) securely connected.

To replace the cover (29), follow these same guidelines to install the collar fixing screws (22) and reassemble the enclosure. Make sure that the cover (29) and collar (30) stay connected throughout the entire procedure and that the connection is always secured with at least three cover screws (20).

Caution

Check all wiring harnesses and tubing lines to make sure they are not pinched when the door is closed.

3 Maintenance

3.1 Routine Maintenance Schedule

Three items of routine maintenance apply to all systems:

- Replacing Chemcassettes®
- Verifying system response
- Replacing the three internal filters annually

If there are external sample line filters, replace filters as indicated in Section 4.11.

3.2 Chemcassette® Replacement

With no target gas present, the SP size Chemcassettes® require replacement every two weeks. EP size Chemcassettes® require replacement every 30 days. XP Chemcassettes® require replacement every 90 days. See Section 1.5 for information on Chemcassette® replacement.

3.3 Verify System Response

Perform the verification routine every two to four weeks. See Section 1.8 for more information.

3.4 Replacing Internal Filters

Internal filters should be replaced annually. The replacement procedure will take approximately one hour to perform. Follow these steps to replace internal filters properly:

1. Separate cover/collar from body. Follow steps in Section 2.5.
2. Open unit. Filters are located inside center area of cover/collar, below and partially behind printed circuit board (PCB). See illustration on Page 5-5.
3. Remove the three screws and six fiber washers securing the PCB. Note location of fiber washers for re-assembly.
4. Leave all cables connected except J-11 (4 pin) and J-3 (10 pin) located on top right of component side (rear view).
5. Carefully lift outward on PCB to locate J-11 (also located to right on component side).
6. Support PCB temporarily in a “raised” position using a rubber band.
7. Remove acid scrubber filter, mounted vertically (Illustration item #66 on Page 5-5). Replace with new filter (P/N 710235).
8. Remove particulate filter (Illustration item #65 on Page 5-5). Replace with new filter (P/N 780248).

Note:

Arrow on body of filter must point in right direction ➔.

9. Remove filter assembly (Illustration item #67 on Page 5-5), if installed. Replace with new filter (P/N 871134).
10. Verify that there are no kinks in tubing.
11. Remove temporary support from PCB.
12. Reconnect cables.

Caution

When reconnecting J-3, make sure opposite end of cable is still connected. Check all other cable connections on and near PCB.

13. Secure PCB with screws and fiber washers. Fiber washers should be on both sides of PCB at each screw location.

14. Before securing cover to body, verify SPM will go into Monitor Mode by powering-up the unit.

Note:

If SPM goes into Monitor Mode, proceed with next step. If not, power down SPM, check all cable connections and try again. If problem persists, call Honeywell Analytics Service.

15. Power down SPM.
16. Secure cover to body (see *Section 2.5*).
17. Power up unit and verify system response as outlined in *Section 1.8*.

3.5 Replacing the Fuse

SPM operation is protected with a fuse located in a fuse holder cap (33) at the lower left front panel. The fuse size is 5 x 20 mm slo-blo. The fuse rating may vary based upon installed SPM options. For replacement, refer to the fuse designation that is listed on the fuse label placed next to the fuse holder.

Warning

Disconnect the external power source before checking or replacing the fuse. Use only the fuse rated for your instrument. Refer to the front panel fuse label for the proper fuse for your instrument.

To replace the fuse, turn the fuse holder cap (33) counterclockwise and pull out. The fuse will remain in the cap.

Remove the blown fuse from the cap and replace with a new fuse of the proper rating for your instrument. Insert fuse into fuse holder and rotate cap clockwise.

3.6 Caring for Chemcassettes®

The SPM uses an SP (standard play-2 week), or EP (extended play-30 day) or XP (longer life-up to three months) Chemcassette®. See *Section 4.9* for Chemcassette® part numbers. Under normal conditions, Chemcassettes® have a shelf life of approximately three months for standard and 1 year for XP. They should be stored in a cool atmosphere and kept out of direct sunlight.

Most Chemcassette® detection systems will maintain optimum sensitivity when stored at room temperature (16°C to 24°C; 60°F to 75°F). A few, such as Aliphatic Amines/Ammonia, Ammonia, Chlorine III/Oxidizers, Diisocyanates, Hydrogen Cyanide, Hydrogen Peroxide, Ozone, Sulfur Dioxide, and Mineral Acids must be stored in a freezer (less than 0°C; 32°F). However, because temperatures in storage rooms can vary, Honeywell Analytics recommends that all Chemcassettes® be stored in a freezer, except Chlorine/Chlorine Dioxide, Chlorine/Oxidizers, Phosgene and XP Phosgene must be stored at 4°C to 25°C (40°F to 77°F).

Each Chemcassette® is stamped with an expiration date at time of manufacture. Under no circumstances should a Chemcassette® be used beyond the expiration date. Equally important, never remove a Chemcassette® from its protective packaging until you are ready to install it in your instrument. Exposure to light, ambient air, and body oils may cause the Chemcassette® to lose some of its sensitivity. For more information on Chemcassette® care, refer to package instructions.

Note:

Chemcassettes® may be ordered on a 12-month blanket purchase order; fresh Chemcassettes® will be shipped on a scheduled basis. Consult Honeywell Analytics for details.

3.7 Removing a Used Chemcassette®

Warning

Never reuse or rewind a used Chemcassette®.

To remove a used Chemcassette®, open the tape load lever (18). Remove the Chemcassette® center retaining screw and pull the empty Chemcassette® from the locator post.

Remove the take-up reel (27), slip off the used Chemcassette®, and discard the tape.

See *Section 1.5* for more information.

3.8 Troubleshooting Guide

System malfunctions are indicated by:

- Pulsing audio signal
- Flashing red and green system status LEDs (9) and (12)
- Flashing relay disable LED (13)
- De-energized fail-safe instrument alarm relay

See *Section 4.7* for fault code information.

Note:

The relay disable LED (13) does not flash for the open tape load lever fault (see *Section 1.8.2*).

If the system fails to activate following installation, you will need to verify power connection.

The following actions should be taken to isolate the cause of the system malfunction or failure to activate:

1. Check to make sure that the green system status LED (9) is lighted. If not, check the instrument power source (2) and the fuse (33).
2. Check that the front panel power switch (8) is pressed up.
3. Check Chemcassette®. An instrument fault (FAULT 30) will be signaled if the Chemcassette® runs out, breaks, or becomes discolored. Replace or re-thread the Chemcassette® as required.
4. Check the tape load lever (18). An instrument fault (FAULT 25) will be triggered if the lever is left open for more than two minutes.
5. If installed, check particulate filter condition. A clogged filter will restrict sample flow (FAULT 17).
6. Check internal filters for clogging, discoloration or moisture droplets (FAULT 17).
7. Ensure sample and exhaust lines are not pinched or kinked (FAULT 17).
8. Verify system response. If the problem persists, consult Honeywell Analytics Service.

4 Specifications

4.1 General Instrument Specifications

Alarm Settings	Standard calibrations are factory set at 1/2 and 1 times TLV of the target gas for all gases except Diisocyanates (5 ppb or 20 ppb). Gas and alarm levels are indicated on the faceplate of the instrument or on the ChemKey.
Detection Technique	Chemcassette® Detection System
Alarm Indications	Audio and visual alarms; SPDT relay contacts.
Voltage	100 VAC to 240 VAC 50/60 Hz (+/- 10%) (Line powered units; voltage-specific chargers supplied with battery backup and portable units.)
Voltage (battery unit)	12 VDC @ 5.4 Ah
Power	15 Watts for base unit. Fitted options may change power requirements. (Consult Honeywell Analytics)
Power (battery unit)	12 VDC @ .4A
Installation Category (overvoltage)	II
Fuse Type	5 x 20 mm slo-blo
Fuse Rating	Fuse rating may vary depending upon fitted options. See label next to fuse holder on front panel.
Relay Rating	120 VAC 10A; 240 VAC 5A; 48 VDC 5A
Analog Output	Isolated 4-20 mA. Maximum load 850 ohms.
Nominal Dimensions	30.5 x 30.5 x 17.8 cm [12"(H) x 12"(W) x 7"(D)] Actual dimensions depend on fitted options.
Weight	6.8 kg (15 pounds) to 11.4 kg (25 pounds). Weight will vary depending on fitted options.
Operating Temperature Range	0 to 40°C (32 to 104°F) (Temperature-compensating options available)
Maximum sample draw against vacuum	1 in/Hg

4.2 4-20 mA Output Signal

The 4-20 mA output on the SPM is always active during monitoring. It is updated at the end of each analysis period; as a result, the signal sent to the strip chart recorder or other equipment is delayed by one analysis period.

The 4-20 mA output is held at the last reported concentration value until it is updated at the end of the next sample period, even if an alarm condition has been reset. This provides a more accurate calculation of time weighted averages.

The 4-20 mA output is an isolated linear signal with 4.0 mA representing a concentration value of 0 and 20.0 mA representing a full scale concentration (generally three times TLV).

4.3 Verifying the 4-20 mA Output Signal

To verify a proper 4-20 mA signal, perform the response verification procedure as explained in ***Section 1.8***. A successful response test will generate an analog signal ranging from 10.1 to 13.2 mA.

If the output is not within these limits, check the following:

1. Check the integrity of all connections.
2. Check that the analog device is set for the proper range.
3. Check that the impedance of the analog device does not exceed 850 ohms.

If the problem still exists, consult Honeywell Analytics.

Note:

Pressing the alarm test key (10) will not cause the 4-20 mA output to change. See ***Section 1.7.3*** for information on how the 4-20 mA responds.

4.4 Output Signals

Gas Calibration	Zero 4.0 mA	LDL** 4.56 mA*	9.33 mA	14.67 mA	Full Scale 20.0 mA
Ammonia (NH_3)	0 ppm	2.6 ppm	25.0 ppm	50.0 ppm	75.0 ppm
Ammonia XP (NH_3)	0 ppm	1.5 ppm*	25.0 ppm	50.0 ppm	75.0 ppm
Arsine (AsH_3)	0 ppb	15 ppb*	50 ppb	100 ppb	150 ppb
Arsine XP (AsH_3)	0 ppb	10 ppb*	50 ppb	100 ppb	150 ppb
Arsine XP (AsH_3) Low Level	0 ppb	0.5 ppb	5.0 ppb	10.0 ppb	15.0 ppb
Boron Trifluoride (BF_3) Low Level	0 ppb	67 ppb*	333 ppb	667 ppb	1000 ppb
Bromine (Br_2)	0 ppb	11 ppb	100 ppb	200 ppb	300 ppb
CHDI	0 ppb	2 ppb	20 ppb	40 ppb	60 ppb
Chlorine II (Cl_2)	0 ppm	0.05 ppm	0.5 ppm	1.00 ppm	1.50 ppm
Chlorine III (Cl_2)	0 ppm	0.05 ppm	0.5 ppm	1.00 ppm	1.50 ppm
Chlorine (Cl_2) Low Level	0 ppb	1 ppb	10 ppb	20 ppb	30 ppb
Chlorine XP (Cl_2)	0 ppm	0.05 ppm	.050 ppm	1.00 ppm	1.50 ppm
Chlorine XP (Cl_2) Low Level	0 ppb	4 ppb*	20 ppb	40 ppb	60 ppb
Chlorine Dioxide (ClO_2)	0 ppb	11 ppb	100 ppb	200 ppb	300 ppb
Chlorine Dioxide (ClO_2) [on F_2/Oxidizer CC]	0 ppb	31 ppb*	100 ppb	200 ppb	300 ppb
Diborane (B_2H_6)	0 ppb	31 ppb*	100 ppb	200 ppb	300 ppb
Diborane XP (B_2H_6)	0 ppb	11 ppb	100 ppb	200 ppb	300 ppb
Dimethyl Amine (DMA)	0 ppm	1.0 ppm*	5.0 ppm	10.0 ppm	15.0 ppm
Dimethyl Amine (DMA) Low Level	0 ppm	0.1 ppm*	2.0 ppm	4.0 ppm	6.0 ppm
Disilane (Si_2H_6)	0 ppm	1.5 ppm*	5.0 ppm	10.0 ppm	15.0 ppm
Fluorine (F_2)	0 ppm	0.11 ppm	1.00 ppm	2.00 ppm	3.00 ppm
Fluorine (F_2) Low Level	0 ppm	0.06 ppm	0.33 ppm	0.67 ppm	1.00 ppm
Germane (GeH_4)	0 ppb	141 ppb*	200 ppb	400 ppb	600 ppb
Germane XP (GeH_4)	0 ppb	141 ppb*	200 ppb	400 ppb	600 ppb
HDI	0 ppb	1 ppb*	20 ppb	40 ppb	60 ppb
HMDI	0 ppb	2 ppb	20 ppb	40 ppb	60 ppb
Hydrogen Bromide (HBr)	0 ppm	0.3 ppm	3.0 ppm	6.0 ppm	9.0 ppm
Hydrogen Chloride (HCl)	0 ppm	0.5 ppm	5.0 ppm	10.0 ppm	15.0 ppm

Gas Calibration	Zero 4.0 mA	LDL** 4.56 mA*	9.33 mA	14.67 mA	Full Scale 20.0 mA
Hydrogen Chloride Low Level (HCl)	0 ppb	28 ppb*	400 ppb	800 ppb	1200 ppb
Hydrogen Cyanide (HCN)	0 ppm	1.1 ppm	10.0 ppm	20.0 ppm	30.0 ppm
Hydrogen Fluoride (HF)	0 ppm	0.6 ppm*	3.0 ppm	6.0 ppm	9.0 ppm
Hydrogen Iodide (HI)	0 ppm	0.3 ppm	3.0 ppm	6.0 ppm	9.0 ppm
Hydrogen Peroxide (H_2O_2)	0 ppm	0.1 ppm	1.0 ppm	2.0 ppm	3.0 ppm
Hydrogen Selenide (H_2Se)	0 ppb	20 ppb*	50 ppb	100 ppb	150 ppb
Hydrogen Selenide XP (H_2Se)	0 ppb	20 ppb*	50 ppb	100 ppb	150 ppb
Hydrogen Sulfide (H_2S)	0 ppm	1.1 ppm	10.0 ppm	20.0 ppm	30.0 ppm
Hydrogen Sulfide Low Level (H_2S)	0 ppb	1 ppb*	30 ppb	60 ppb	90 ppb
Hydrogen Sulfide XP (H_2S)	0 ppm	1.1 ppm	10.0 ppm	20 ppm	30 ppm
Hydrogen Sulfide XP Dry (H_2S/D)	0 ppm	1.1 ppm	10.0 ppm	20 ppm	30 ppm
Hydrogen Sulfide XP Low Level (H_2S)	0 ppb	3 ppb	30 ppb	60 ppb	90 ppb
IEM	0 ppb	2 ppb	20 ppb	40 ppb	60 ppb
IPDI	0 ppb	2 ppb	20 ppb	40 ppb	60 ppb
MDI	0 ppb	2 ppb	20 ppb	40 ppb	60 ppb
Methylene Dianiline (MDA)	0 ppb	3 ppb*	20 ppb	40 ppb	60 ppb
MMH	0 ppb	21 ppb	200 ppb	400 ppb	600 ppb
MMH-low	0 ppb	3 ppb*	10 ppb	20 ppb	30 ppb
N_2H_4	0 ppb	20 ppb*	100 ppb	200 ppb	300 ppb
N_2H_4 Low Level	0 ppb	1 ppb	10 ppb	20 ppb	30 ppb
n-Butyl Amine (N-BA)	0 ppm	0.4 ppm	4.0 ppm	8.0 ppm	12.0 ppm
NDI	0 ppb	2 ppb	20 ppb	40 ppb	60 ppb
Nitric Acid (HNO_3)	0 ppm	0.2 ppm	2.0 ppm	4.0 ppm	6.0 ppm
Nitrogen Dioxide (NO_2)	0 ppm	0.3 ppm	3.0 ppm	6.0 ppm	9.0 ppm
Nitrogen Dioxide (NO_2) [on F_2/Oxidizer CC]	0 ppm	0.3 ppm	3.0 ppm	6.0 ppm	9.0 ppm
Ozone (O_3)	0 ppb	31 ppb*	100 ppb	200 ppb	300 ppb
Phosgene ($COCl_2$)	0 ppb	11 ppb	100 ppb	200 ppb	300 ppb
Phosgene XP ($COCl_2$)	0 ppb	11 ppb	100 ppb	200 ppb	300 ppb
Phosphine (PH_3)	0 ppb	32 ppb	300 ppb	600 ppb	900 ppb

Gas Calibration	Zero 4.0 mA	LDL** 4.56 mA*	9.33 mA	14.67 mA	Full Scale 20.0 mA
Phosphine XP (PH_3)	0 ppb	32 ppb	300 ppb	600 ppb	900 ppb
PPDI	0 ppb	2 ppb	20 ppb	40 ppb	60 ppb
p-Phenylene Diamine (PPD)	0 ppb	2 ppb	20 ppb	40 ppb	60 ppb
Silane (SiH_4)	0 ppm	0.5 ppm	5.0 ppm	10.0 ppm	15.0 ppm
Silane XP (SiH_4)	0 ppm	0.3 ppm*	5.0 ppm	10.0 ppm	15.0 ppm
Stibine (SbH_3)	0 ppb	20 ppb*	100 ppb	200 ppb	300 ppb
Sulfur Dioxide (SO_2)	0 ppm	0.2 ppm	2.0 ppm	4.0 ppm	6.0 ppm
Sulfuric Acid (H_2SO_4)	0 ppb	26 ppb	250 ppb	500 ppb	750 ppb
TDI	0 ppb	2 ppb	20 ppb	40 ppb	60 ppb
Tert-butyl Arsine (TBA)	0 ppb	15 ppb*	50 ppb	100 ppb	150 ppb
Tert - butyl Arsine XP (TBA)	0 ppb	15.0 ppb*	50 ppb	100 ppb	150 ppb
Tert-butyl Phosphine (TBP)	0 ppb	60 ppb*	300 ppb	600 ppb	900 ppb
Tert - butyl Phosphine XP (TBP)	0 ppb	92 ppb*	300 ppb	300 ppb	900 ppb
Tetrakis Dimethylamino Titanium (TDMAT)	0 ppm	0.3 ppm*	1.3 ppm	2.7 ppm	4.0 ppm
TMDI	0 ppb	2 ppb	20 ppb	40 ppb	60 ppb
TMXDI	0 ppb	2 ppb	20 ppb	40 ppb	60 ppb
Toluene Diamine (TDA)	0 ppb	4 ppb*	20 ppb	40 ppb	60 ppb
Trimethyl Amine (TMA)	0 ppm	1.1 ppm	10.0 ppm	20.0 ppm	30.0 ppm
UDMH	0 ppb	53 ppb	500 ppb	1000 ppb	1500 ppb
UDMH Low Level	0 ppb	5 ppb*	10 ppb	20 ppb	30 ppb
XDI	0 ppb	2 ppb	20 ppb	40 ppb	60 ppb

* Output signal at LDL level concentrations of most gases is 4.56 mA. Gases marked with an asterisk have different LDL output signals as noted in Table 4-1.

** Lower Detection Limit

Table 4-1. mA Output for LDL

Gas	mA at LDL	Gas	mA at LDL
DMA Low	4.25	GeH_4	7.76
DMA	5.07	GeH_4(XPS)	7.76
MDA	4.82	H_2Se	6.13
TDA	5.07	H_2Se (XPS)	6.13
TDMAT	5.07	SbH_3	5.07
HDI	4.25	TBA	5.63
N_2H_4	5.07	TBA (XPS)	5.63
MMH Low	5.63	TBP	5.63
UDMH Low	6.70	TBP (XPS)	5.63
AsH_3	5.63	H_2S Low	4.19
AsH_3 (XPS)	5.07	HCl Low	4.38
B_2H_6	5.63	HF	5.07
BF_3 Low	5.07	Cl_2 Low (XPS)	5.07
Si_2H_6	5.63	O_3	5.63
SiH_4 (XPS)	4.34	ClO_2 (F_2/Ox)	5.63
		NH_3 (XPS)	4.31

4.5 Status Indicators

Condition	Indicator Status
Normal Monitoring	Green system status LED (9) lighted.
Chemcassette® Loading	Green system status LED (9) flashing slowly. If instrument remains in this mode for more than 2 minutes, red system status LED (12) will also begin to flash, audio alarm pulses and the instrument fault relay is activated.
Response Verification	Green system status LED (9) flashing rapidly. If system passes test, alarm lamp (16) lights and audio alarm sounds continuously; if system fails test, red system status LED (12) lights and audio alarm signals twice.
Instrument Fault (except Chemcassette® loading fault)	Red and green system status LEDs (9) and (12) are both flashing. The relay disable LED (13) flashes (except for the open tape load lever fault), audio alarm pulses and the instrument fault relay is activated.
Gas Condition	See ***Section 1.9.1***.

4.6 Display Messages

Status	Display
Normal Monitoring	Actual concentration in ppm (parts-per-million) or ppb (parts-per-billion). When unit detects an above full-scale condition, the display will show xxx + ppx; e.g., AsH3 above full-scale is 150 + ppb; Cl2 reading above full-scale is 3.0 + ppm.
Verify Mode	(VERIFY)
Instrument Fault	(FAULT) (along with two-digit code; see Section 4.7 for codes and corresponding faults or errors)
Alarm Simulation	See ***Section 1.7.5*** for displayed information.

4.7 Fault Codes

Instrument Fault or Error: Message (FAULT) along with two-digit fault code	
Fault Code	**Fault or Error**
06	RAM Failure, Contact Honeywell Analytics
08	EEPROM Fault, Contact Honeywell Analytics
10	Look-up Table Error, Contact Honeywell Analytics
11	ChemKey Error (See *Section 5.4.9*)
17	Loss of Flow (See *Section 3.8* Numbers 5, 6 & 7)
21	Motor Home Time-out, Contact Honeywell Analytics
25	Gate Fault (Mode Time-out) (See *Section 1.8.2*)
30	High Background Counts (See *Section 3.8* No. 3)
32	Reference Voltage #1 Fault, Contact Honeywell Analytics
34	Battery Very Low
36	Over Temp (Heater Option Only) (See *Section 5.9.3*)

Contact Honeywell Analytics if problems persist.

Note:

A fault condition will cancel the alarm relay disable feature. To resume operations with alarm relay disabled, you must re-select the feature. See *Section 1.11*.

4.8 Output Terminal Status

Condition	Alarm Relay Terminals					
	Alarm Level 1		Alarm Level 2		*Instrument Fault	
	N/O	N/C	N/O	N/C	N/O	N/C
Power Off	O	C	O	C	O	C
Power On, No Gas	O	C	O	C	C	O
Power On, Gas (Level 1)	C	O	O	C	C	O
Power On, Gas (Level 2)	C	O	C	O	C	O
Power On, Fault	O	C	O	C	O	C
Power On, Alarm Test	C	O	C	O	C	O
Power On, Verify	O	C	O	C	C	O
Power On, Tape Load	O	C	O	C	C	O
Power On, No Gas, Relay Disable	O	C	O	C	O	C
Power On, Gas, Relay Disable	O	C	O	C	O	C
Power On, Fault, Relay Disable	O	C	O	C	O	C
Power On, Alarm Test, Relay Disable	O	C	O	C	O	C
Power On, Verify, Relay Disable	O	C	O	C	O	C
Power On, Tape Load, Relay Disable	O	C	O	C	O	C

4.9 Gas Response Specifications

Gas Name	TLV	Default Alarm Level 1[1]	Default Alarm Level 2[1]	Sample Time (sec)	Chemcassette® Part Number		
					SP	EP	XPS[2]
Amines							
Ammonia (NH_3)	25 ppm	12.5 ppm	25 ppm	15	706042	700342	1740-9309
Dimethyl Amine (DMA) Low Level	5 ppm	1 ppm	3 ppm	240	706042	700342	
Dimethyl Amine (DMA)	5 ppm	2.5 ppm	5 ppm	60	706042	700342	
n-Butyl Amine (NBA)	5 ppm	2.5 ppm	5 ppm	30	706042	700342	
Methylene Dianiline (MDA)	100 ppb	10 ppb	20 ppb	120	709528	700343	
p-Phenylene Diamine (PPD)	20 ppb	10 ppb	20 ppb	30	709528	700343	
Toluene Diamine (TDA)	10 ppm	10 ppb	20 ppb	240	709528	700343	
Trimethyl Amine (TMA)	5 ppm	5 ppm	10 ppm	30	706002	n/a	
Tetrakis Dimethylamino Titanium (TDMAT)	5 ppm	0.6 ppm	1.2 ppm	60	706042	700342	
Diisocyanates							
HDI	5 ppb	5 ppb	20 ppb	180	700506	700309	
MDI	5 ppb	5 ppb	20 ppb	120	700506	700309	
PPDI		5 ppb	20 ppb	60	700506	700309	
TDI	5 ppb	5 ppb	20 ppb	60	700506	700309	
All other Diisocyanates		5 ppb	20 ppb	120	700506	700309	
Hydrazines							
MMH	10 ppb	100 ppb	200 ppb	120	708013	700347	
MMH Low Level	10 ppb	5 ppb	10 ppb	900	708013	700347	
Hydrazine (N_2H_4)	10 ppb	50 ppb	100 ppb	120	708013	700347	
Hydrazine (N_2H_4) Low Level	10 ppb	5 ppb	10 ppb	900	708013	700347	
UDMH	10 ppb	250 ppb	500 ppb	60	708013	700347	
UDMH Low Level	10 ppb	250 ppb	500 ppb	60	708013	700347	
Hydrides							
Arsine (AsH_3)	50 ppb	25 ppb	50 ppb	15	705502	700300	1740-9300
Arsine (AsH_3) Low Level	50 ppb	2 ppb	4 ppb	480			1740-9300
Diborane (B_2H_6)	50 ppb	50 ppb	100 ppb	30	705502	700300	1740-9300
Disilane (Si_2H_6)	2.5 ppm	2.5 ppm	5 ppm	10	705502	700300	
TLV - Threshold Limit Value							

Gas Name	TLV	Default Alarm Level 1[1]	Default Alarm Level 2[1]	Sample Time (sec)	Chemcassette® Part Number		
					SP	EP	XPS[2]
Hydrides (cont'd)							
Germane (GeH_4)	200 ppb	200 ppb	400 ppb	240			1740-9300
Hydrogen Selenide (H_2Se)	50 ppb	25 ppb	50 ppb	60	705502	700300	1740-9300
Hydrogen Sulfide (H_2S)	10 ppm	5.1 ppm	10 ppm	10			1740-9300
Hydrogen Sulfide (H_2S) Dry	10 ppm	5.1 ppm	10 ppm	10			1740-9300
Hydrogen Sulfide (H_2S) Low Level	10 ppm	4 ppb	80 ppb	900			1740-9300
Phosphine (PH_3)	300 ppb	150 ppb	300 ppb	15	705502	700300	1740-9300
Silane (SiH_4)	5 ppm	2.5 ppm	5 ppm	30	705502	700300	1740-9300
Stibine (SbH_3)	100 ppb	50 ppb	100 ppb	30	705502	700300	
Tert-Butyl Arsine (TBA)	0.01mg/m^3	25 ppb	50 ppb	90	705502	700300	1740-9300
Tert-Butyl Phosphine (TBP)		150 ppb	300 ppb	120	705502	700300	1740-9300
Hydrogen Cyanide (HCN)	4.7 ppm	2.4 ppm	4.7 ppm	10	704510		
Hydrogen Sulfide (H_2S)	10 ppm	5 ppm	10 ppm	10	701012	700304	
Hydrogen Sulfide (H_2S) Low Level	10 ppm	[3]	[3]	900	701012	700304	
Mineral Acids							
Boron Trifluoride (BF_3) Low Level	1 ppm	502 ppb	749 ppb	240	705505	700337	
Hydrogen Bromide (HBr)	2 ppm	1.5 ppm	3 ppm	15	705505	700337	
Hydrogen Chloride (HCl)	2 ppm	1 ppm	2 ppm	10	705505	700337	
Hydrogen Chloride (HCl) Low Level	2 ppm	120 ppb	240 ppb	240	705505	700337	
Hydrogen Fluoride (HF)	0.5 ppm	1.5 ppm	3 ppm	30	705505	700337	
Hydrogen Iodide (HI)		3 ppm	6 ppm	15	705505	700337	
Nitric Acid (HNO_3)	2 ppm	1 ppm	2 ppm	15	705505	700337	
Sulfuric Acid (H_2SO_4)	50 ppb	125 ppb	250 ppb	120	705505	700337	
Oxidizers							
Bromine (Br_2)	100 ppb	50 ppb	100 ppb	60	711314	700313	
Chlorine (Cl_2)	0.5 ppm	0.25 ppm	0.5 ppm	30			1740-9308
Chlorine II (Cl_2)	0.5 ppm	0.25 ppm	0.5 ppm	15	704007		
Chlorine III (Cl_2)	0.5 ppm	0.25 ppm	0.5 ppm	15	704308	700308	
Chlorine (Cl_2) Low Level	0.5 ppm	10 ppb	20 ppb	600	704007		1740-9308

TLV - Threshold Limit Value

Gas Name	TLV	Default Alarm Level 1[1]	Default Alarm Level 2[1]	Sample Time (sec)	Chemcassette® Part Number		
					SP	EP	XPS[2]
Oxidizers (cont'd)							
Chlorine Dioxide (ClO_2)	100 ppb	50 ppb	100 ppb	240	1750-9306	1740-9306	
Fluorine (F_2)	1 ppm	0.5 ppm	1 ppm	30	1750-9306	1740-9306	
Fluorine (F_2) Low Level	1 ppm	0.1 ppm	0.2 ppm	120	1750-9306	1740-9306	
Hydrogen Peroxide (H_2O_2)	1 ppm	0.5 ppm	1 ppm	15	700278	700509	
Nitrogen Dioxide (NO_2)	3 ppm	1.5 ppm	3 ppm	30	703012	700305	
Nitrogen Dioxide (NO_2)[4]	3 ppm	1.5 ppm	3 ppm	30	704308	700308	
Nitrogen Dioxide (NO_2)[5]	3 ppm	1.5 ppm	3 ppm	240	1750-9306	1740-9306	
Ozone (O_3)	100 ppb	50 ppb	100 ppb	60	704514		
Phosgene ($COCl_2$)	100 ppb	50 ppb	100 ppb	30	702020	700307	1740-9307
Sulfur Dioxide (SO_2)	2 ppm	1 ppm	2 ppm	15	705015		
TLV - Threshold Limit Value							

[1] Other alarm levels can be made available - consult Honeywell Analytics
[2] XPS Chemcassette® requires the appropriate calibration
[3] Consult Honeywell Analytics for alarm levels
[4] Nitrogen Dioxide using Chlorine III Chemcassette®
[5] Nitrogen Dioxide using Fluorine/Oxidizer Chemcassette®

Caution

Gas concentrations below the full scale of the measuring range will not be reported until after the sample time duration has completed. For measured values above the measuring range, an alarm will be issued immediately.

Notes:

"Sample time" in the table above represents the time required to:

- Detect < full-scale gas concentration
- Calculate and display concentration value
- Update the 4-20 mA signal
- Produce a RS-422 data packet (optional)

When concentration is > full-scale, response time is shortened in proportion to the concentration.

Example:
Ammonia Full-scale = 75 ppm. Response time = 15 sec

Concentration	20 ppm	75 ppm	150 ppm	300 ppm
Response Time	15 seconds	15 seconds	7.5 seconds	3.8 seconds

Approximate Chemcassette® replacement intervals with no target gas present:

SP Size: 2 weeks
EP Size: 30 days
XPS Size: 90 days

4.10 Sample Line Limitations

Certain target gases carry sample line restrictions. Note that the limits are maximums; shorter sample lines are acceptable. Sample line material must be 1/8" I.D. x 1/4" O.D. FEP Teflon, P/N 102599.

4.11 Particulate Filters

For dusty conditions, particulate filters may be installed on sample lines for certain gases. For noncorrosive gases, use particulate filter type A (P/N 780248). Replace this filter every six months. For corrosive gases, use filter type B (P/N 1830-0055) or type C (P/N 1991-0147). Refer to the table below for specific gases.

Target Gas	Maximum Sample Line		Filter Type A	Filter Type B	Filter Type C
	Standard SPM	SPM fitted with Extended Sample Option			
Aromatic Amines (PPD, MDA, TDA)	15 cm (6 in)	Not approved	no filter		
Diisocyanates			no filter		
Hydrazines (N_2H_4, N_2H_4-low, MMH, MMH-low, UDMH)			no filter		
n-Butyl Amine	3 meters (10 ft)	8 meters (25 ft)	X		
Chlorine Dioxide	3 meters (10 ft)	15 meters (50 ft)		X	X
Hydrogen Peroxide			no filter		
Hydrogen Bromide	3 meters (10 ft)	*		X	X
Hydrogen Iodide			no filter		
Nitric Acid	1 meter (3 ft)	Not approved		X	X
Sulfuric Acid				X	X
Ammonia	3 meters (10 ft)	30 meters (100 ft)	X		
Bromine				X	X
Chlorine				X	X
Chlorine-low				X	X
Dimethyl Amine				X	X
Tetrakis Titanium (TDMAT)				X	X
Hydrides (AsH3, PH3, SiH4, B2H6, H2Se, GeH4, TBA, TBP)			X		
Hydrogen Chloride				X	X
Hydrogen Cyanide			X		
Hydrogen Fluoride				X	X

Target Gas	Maximum Sample Line		Filter Type A	Filter Type B	Filter Type C
	Standard SPM	SPM fitted with Extended Sample Option			
Hydrogen Sulfide	3 meters (10 ft)	30 meters (100 ft)	X		
Hydrogen Sulfide-dry			X		
Hydrogen Sulfide (low)			X		
Nitrogen Dioxide				X	X
Ozone			no filter		
Phosgene			X		
Sulfur Dioxide				X	X
Fluorine	3 meters (10 ft)	6 meters (20 ft)		X	X
Fluorine-Low Level				X	X
Boron Trifluoride				X	X

The Teflon-membrane particulate filter assembly, P/N 1830-0055 requires replacing this filter's membrane, P/N 0235-1072 every 30 days.

* Hydrogen Bromide and Hydrogen Iodide are very water soluble. A high relative humidity (RH) will cause sample loss due to absorption onto the sample lines. For these gases, use the table below as a guide to determine the maximum sample length.

Gas	RH of Sample	Maximum Sample Length (with extended sample option)
Hydrogen Bromide or Hydrogen Iodide	<40%	100 ft. (30 m)
	40-60%	20 ft. (6 m)

Note:

When monitoring for gases using low-level calibrations, additional sample line restrictions may apply. Consult Honeywell Analytics.

Caution

Acid scrubbing filters (P/N 710235) are not to be used with SPM sample lines.

5 Options

5.1 AccuPulse Dilution System

The heart of the AccuPulse Dilution System is a Teflon 3-way solenoid valve with millisecond speed of response. The incoming sample gas is drawn through the normally closed port, a diluent source is drawn through the normally open port, and the diluted sample is available at the common port for sampling by the SPM.

The AccuPulse system operates on a gas dilution ratio which causes the SPM to analyze only a fraction of the actual gas concentration. The instrument software contains a multiplier which corrects for this dilution, and allows the front panel display to report the proper concentration of the gas being admitted through the sample tube. The dilution ratio is factory set.

The alarm levels are factory set in accordance with the calibration of the instrument and typically correspond to 1/2 TLV and TLV, (with both values being multiplied by the dilution factor).

5.1.1 AccuPulse Installation

Attach 1/8" I.D. x 1/4" O.D. Teflon sample tube to the sample inlet fitting (15). Sample line lengths greater than 10 feet are not recommended with this option due to increased sample transport times. See ***Section 4.10*** for more information on sample line length.

The sample gas must be at atmospheric pressure to ensure proper operation of the dilution system. The fitting marked DILUENT INLET can be left vacant if the SPM is located in an atmosphere which contains clean air. If this is not possible, a source of clean air must be supplied through this fitting at atmospheric temperature and pressure. Sample stream humidity requirements must be maintained.

5.2 Z-Purge System Option

The SPM fitted with the Z-Purge option is housed in a rugged, NEMA 4X fiberglass enclosure. [See Z-Purge enclosure illustration with accompanying legend (***page 5-3***) for parts and controls.] The enclosure is designed to fully utilize the monitoring capability of your SPM detector while allowing maximum flexibility for mounting accessories and maintaining proper instrument operation. It has a fully gasketed seal and a large view-through front window for easy observation of monitoring activity. The swing-open door allows access for routine maintenance. The fiberglass construction withstands harsh environmental conditions, surface impact, and corrosive atmospheres.

Caution

Before installing the Z-Purge enclosure or before starting to connect alarms, make sure you understand the correct way to disassemble the enclosure. See *Section 5.2.5* for instructions.

The SPM purge enclosure contains all the equipment necessary for air purging including override switch (55), explosion proof switch (56), pressure gauge (54), pressure relief valve (58), inlet regulator (50) and bulkhead fittings. When closed and purged, the safe, trouble-free environment insures optimum equipment performance.

5.2.1 Purge Installation

Sample line requirements for Z-Purge systems are the same as conventional SPM monitors. See ***Sections 2.3*** and ***4.10***.

Proper venting requires minimal pressure drop at fittings labeled "PRESSURE RELIEF," "PURGE OUTLET" and "ATMOSPHERIC REFERENCE." Do not attach tubing,

pipes or other items at these locations (low-restriction bug screens are acceptable).

5.2.2 User Responsibility

The operating temperature range of the standard SPM is 0°C to 40°C (32°F to 104°F). Options are available for use outside of this standard temperature range.

The user is responsible for providing purge inlet air temperature which will not let the internal temperature of the enclosure fall outside of the SPM's operating temperature range.

Purge Supply

The typical purge supply gas is "instrument quality" air. The air source for the purge system is to be free of oil and liquid. Ordinary plant compressed air is normally not suitable without the proper conditioning. Nitrogen gas may be used for purge supply instead of compressed air.

The compressor source of purge air is to be physically located in a non-hazardous area. The air supply lines from the compressor to the SPM should be made of a non-combustible material.

See NFPA 496-1993 for additional information on purge supply.

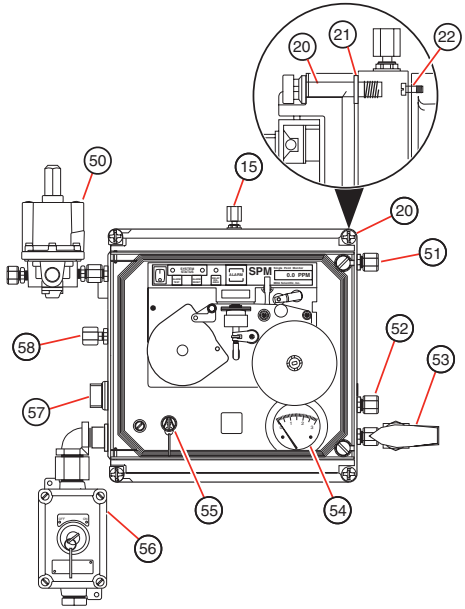

Legend

15.	Sample inlet port	52.	Atmospheric reference port
20.	Cover screw	53.	Purge outlet valve
21.	Retaining ring	54.	Purge pressure gauge
22.	Collar fixing screw	55.	Override switch
50.	Purge gas inlet regulator	56.	Explosion proof switch
51.	Exhaust port	57.	Cable conduit
		58.	Pressure relief valve

5.2.4 Electrical Connection

The Z-Purge enclosure incorporates an explosion-proof, keyed power switch. The approved method of connecting electrical power to this switch is through explosion-proof electrical conduit (pipe) with tapered pipe threads and all seals at all junctions. See diagram for proper wire connections including the portions that are pre-wired by Honeywell Analytics.

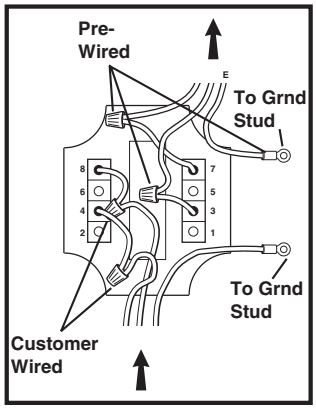

Conduit wiring should be #14 AWG minimum and connected to a 15A or 20A circuit breaker.

5.2.5 Opening Z-Purge Enclosure

Caution

Improper disassembly of the SPM enclosure can cause internal tubing to become detached from the sample inlet port (15) and result in loss of monitoring. Before starting to connect alarms, make sure you understand the correct way to disassemble the enclosure. To prevent instrument damage and to guard against possible loss of monitoring, never allow the cover (29) to become separated from the collar (30).

Follow these important guidelines in opening up the Z-Purge enclosure to make output and alarm connections:

- Make sure electrical power is disconnected. If power had previously been on, follow the Z-purge operation instructions (***Section 5.2.7***).
- The cover (29) and the collar (30) must always remain connected together.
- During disassembly and reassembly, the connection between the cover (29) and the collar (30) must be secured by at least three cover screws (20).
- To open the hinged collar (30) from the SPM body (31), you must remove the collar fixing screws (22) one at a time.
- Observe that the collar fixing screws (22) are mounted behind the cover screws (20).
- In order to reach each collar fixing screw (22), you must temporarily remove the cover screw (20) and the retaining ring (21).
- After removing each collar fixing screw (22) and retaining ring (21), replace each cover screw (20) in order to keep the collar (30) and the cover (29) securely connected.

To close up the instrument, follow these same guidelines to install the collar fixing screws (22) and reassemble the enclosure. Make sure that the cover (29) and collar (30) stay connected throughout the entire procedure and that the connection is always secured with at least three cover screws (20).

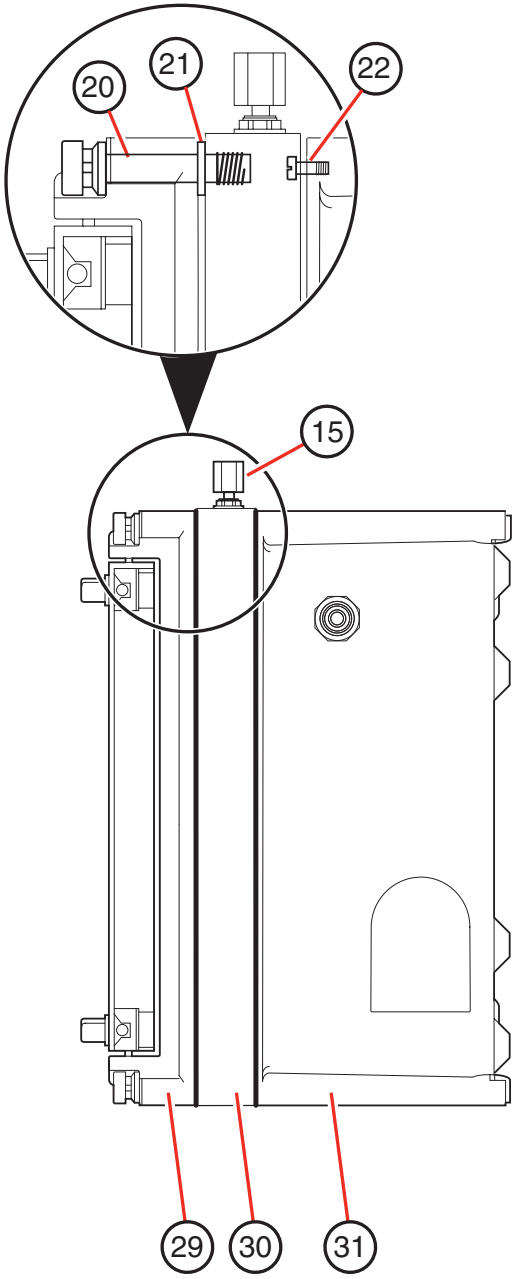

5.2.6 Output Connections

The illustration below shows the interior connection points for the following terminations:

Remote reset option (60), if equipped. See ***Section 5.10***.

RS-422 option (62), if equipped. See ***Section 5.5***.

Terminal strip (61) for gas alarms relays, instrument fault relay, and 4-20 mA output.

All wiring entering and exiting the SPM enclosure must be properly seal fitted, dammed, and potted before the instrument is put into service. After making the connections, be sure that all wiring harnesses and tubing lines are secure and will not be pinched when the door is closed.

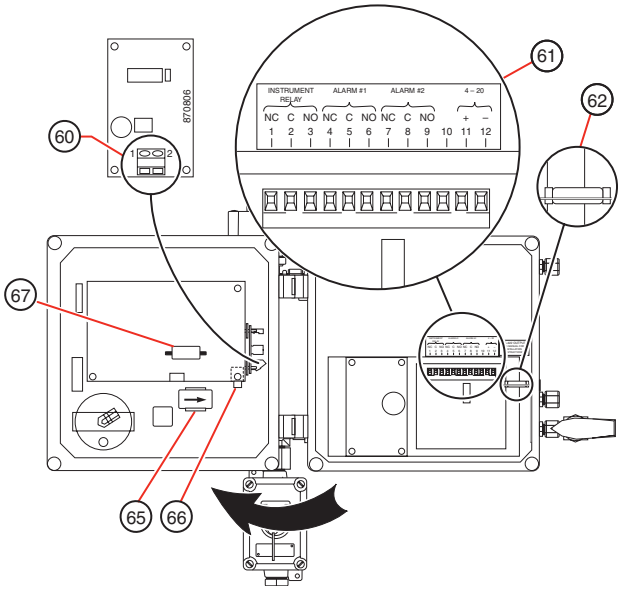

5.2.7 Z-Purge Servicing and Power-up Procedures

The Model SPM Gas Monitor with Z-Purge requires that certain procedures be followed when servicing the instrument (follow Steps 1 to 10) or when the instrument has lost purge pressure (follow Steps 8 to 10).

Warning

Enclosure shall not be opened unless the area is known to be non-hazardous or unless all devices within have been de-energized for at least five minutes. Verify removal of the power source to the alarm and fault relay contacts. Following service, do not restore power to analyzer until it has been purged for five minutes with instrument quality air or nitrogen at 28 SCFH (13.2 LPM).

Refer to diagram on *page 5-3* for assistance with the following procedures. Make sure these procedures are followed when performing any service work to the instrument.

1. Before beginning service work, take care to insure that power is removed from all alarm and fault relay contacts.
2. Turn off main power at the explosion proof switch (56).
3. Do not open cabinet unless the area is known to be non-hazardous or unless all devices within have been de-energized for five minutes.
4. Open purge outlet valve to the horizontal position (53).
5. All maintenance not requiring power can be performed at this time.

Warning

Do not restore power unless area is known to be non-hazardous or unless power has been removed from all devices within the enclosure for five minutes.

6. For maintenance/service requiring power, turn override switch (55) mounted on the front panel to override position (horizontal). Turn on main power at explosion proof switch (56).
7. At this point, the purge flow may be turned off via the purge gas inlet regulator (50) adjustment.

Note:

Upon completion of maintenance/service, the following steps must be performed:

8. Turn off main power (56), return override switch (55) to the “on” position (vertical) and close cabinet.
9. Verify that the purge outlet valve (53) is still open. Readjust the purge gas inlet regulator (50) to achieve 28 SCFH (13.2 LPM). Purge at this rate for a minimum of five minutes to allow a minimum of four enclosure volumes of purge gas to flow through unit.
10. To conserve purge gas, adjust purge gas inlet regulator (50) two turns counterclockwise. Very slowly close purge outlet valve (53) and simultaneously adjust purge gas inlet regulator (50) until purge pressure gauge (54) indicates 0.5-1.0 inches of water column.
11. Turn on main power at explosion proof switch (56).

Note:

Should there be a loss of enclosure pressure, the safety interlock switch will disconnect power to the instrument. Before restoring pressure to the enclosure, shut off main power via explosion proof switch (56). Purge and restart the instrument as instructed in steps 9 through 11.

5.2.8 Z-Purge Troubleshooting

Carefully follow all of the steps of the installation procedure. The SPM should be fully operational. If, however, after completing the steps, the instrument is not activated, make sure:

1. The electrical power connection (1) is good.
2. The main power switch (8) on the SPM is on and that the explosion proof power switch (56) is turned to the “on” position.
3. Air pressure within the enclosure is high enough to activate the pressure switch.

If, after trying all of these steps, the instrument still does not activate, insert key into override switch (55) and turn clockwise to activate SPM. If the instrument activates, you may have a faulty pressure switch. For more information, contact Honeywell Analytics Service.

Warning

For continued protection against risk of fire, replace the instrument (front panel) fuse with a 5 x 20 mm, 250-volt, slo-blo fuse only. Refer to front panel fuse label for proper fuse type and rating.

5.3 Duty Cycle Option

The duty cycle option switches SPM operation from continuous monitoring to intermittent sampling. The option conserves Chemcassette® usage in applications which have a background level of the target gas.

5.3.1 Duty Cycle Intervals

The duty cycle option allows sampling intervals in half-minute increments from one-half to 17 minutes during which the SPM will perform one sample cycle. For example, a selected duty cycle of five minutes will cause the SPM to perform one sample period every five minutes.

During the non-monitoring period, the sample pump is shut off until about 60 seconds before the next monitoring period. This ensures that a fresh sample will be analyzed. If the sample time for the target gas is greater than or equal to the duty cycle interval, the instrument will monitor continuously.

If the Duty Cycle period is set to less than 1-1/2 minutes, the SPM will continue to draw a sample. If the Duty Cycle is set to 1-1/2 minutes or greater, then the SPM will shut the sample pump off when the current monitoring period is complete, but will turn the pump on about 60 seconds before the SPM is to do a monitoring cycle.

5.3.2 Setting the Duty Cycle

Set the SPM duty cycle as follows:

1. Open the tape load lever (18) to put the SPM in load mode.
2. Press alarm reset (11) and hold in for two seconds.
3. The digital display (19) will flash (XX.X MIN) which is the current duty cycle setting.

4. Press the alarm reset (11) to increase the duty cycle setting in one half minute increments. Above 17 minutes, the setting rotates to zero. Continue to press alarm reset (11) until the display shows the desired duty cycle setting.
5. To store the new setting, press alarm test (10) and hold for two seconds. The digital display (19) shows (TIME SET).
6. Close the tape load lever (18) to return to monitor mode.

5.3.3 Duty Cycle Concentration Reporting

In between sample periods, the digital display (19) alternately shows the last gas concentration and the time remaining to the nearest minute before the next sample period. The concentration displays for ten seconds and the time before the next sample displays for two seconds.

After each sample period, the 4-20 mA signal updates to the latest concentration and holds that value until the next sample period.

Relay contacts are activated when the concentration exceeds the respective alarm value and latched until reset.

5.4 ChemKey Option

The ChemKey option allows monitoring of different gases with one SPM unit. To change gases, change the Chemcassette® and insert the new ChemKey. Gas information, including type of gas and alarm levels, is programmed into a memory chip sealed within the ChemKey.

5.4.1 ChemKey Components

The illustration below shows a side view of a typical ChemKey. To activate the ChemKey, insert the key in the front panel slot (32) and turn clockwise one-quarter turn. Note the markings on the ChemKey:

5.4.2 SPM Legend (71)

The SPM ChemKey is different from ChemKeys for other Honeywell Analytics systems. Make sure that the ChemKey you use on an SPM unit carries an SPM designation.

5.4.3 Gas Symbol/Name (72)

The key carries the chemical symbol or name of the gas for which the ChemKey is programmed. This gas symbol or name must match the Chemcassette® for the target gas.

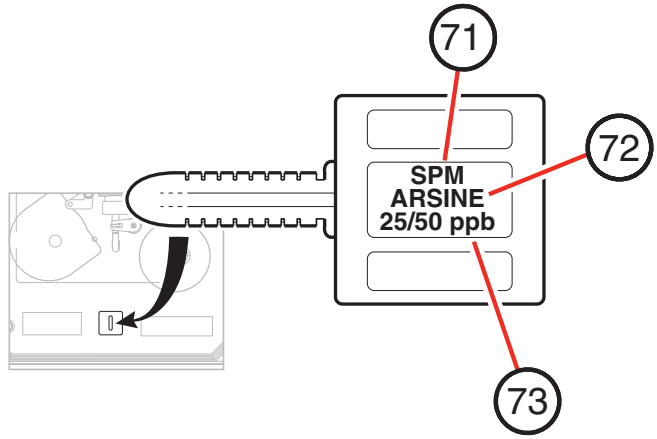

5.4.4 Alarm Levels (73)

The bottom line on the ChemKey label shows the factory set alarm levels 1 and 2 for the target gas.

5.4.5 Family Chemcassettes®

Gas families such as Hydrides, Mineral Acids, Diisocyanates, and Hydrazines use one type of Chemcassette® per family. However, for target gases within these families, you must use a ChemKey specific to the target gas.

5.4.6 Sample Lines

Different target gases may have different limitations on length of sample line and use of particulate filters. See *Sections 4.10* and *4.11* for more information.

Warning

When converting the SPM using the ChemKey option, make sure sample line limitations for the new target gas are followed.

5.4.7 ChemKey Operation

With the proper ChemKey and Chemcassette® in place, start monitoring by turning on the ChemKey one-quarter turn and by turning on the main power switch (8). At start-up, the SPM display will show the name of the gas, programmed alarm levels, and the appropriate Chemcassette® to use. Observe this display information as a check on the correct match with the ChemKey and Chemcassette®. Following this start-up display, the SPM monitors as normal.

5.4.8 Changing Gases

To change from one ChemKey gas to another:

1. Switch off main power control (8).
2. Turn ChemKey counterclockwise and remove.
3. Remove old Chemcassette®.
4. Clean all tape transport surfaces with methanol using a small rag or cotton swab.
5. Install new Chemcassette®.
6. Check new target gas against information in *Section 4.10* – Sample Line Limitations and *Section 4.11* – Particulate Filter.
7. Insert new ChemKey, turn clockwise, switch main power switch on (8) and observe digital display (19) for gas information.

5.4.9 ChemKey Faults

In the case of an operating failure or fault with the ChemKey, the display (19) reads (FAULT 11). This fault is specific to the ChemKey system, and could indicate one of several possible conditions:

- The ChemKey may not be turned on (i.e., still vertical instead of horizontal).
- The key might be missing or not fully inserted.
- The ChemKey memory may be defective.

If after checking the ChemKey position and determining that it is properly inserted, turned on, and labeled SPM, either the key is defective or there are internal circuit problems. Contact Honeywell Analytics Service for assistance.

5.5 RS-422 Option

The RS-422 option includes an internal clock and calendar. See *Section 5.5.4* for instructions on setting date and time.

5.5.1 Z-Purge SPM Connection

On instruments fitted with both the Z-Purge and RS-422 options, the RS-422 connection is made through a nine-pin male D subconnector located inside the SPM enclosure. See *Sections 5.2.5* and *5.2.6* for connection instructions.

5.5.2 Pin Designations

The chart and illustrations show SPM pin designations for both standard SPM units and for Z-Purge units. For Z-Purge systems, the numbered connectors are directly matched. Both portions of the connector are provided.

Caution

Be careful when soldering cable to connectors. Improper solder joints and/or solder splashes will cause communication errors and possible damage to the system.

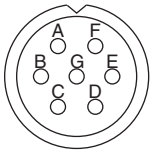

At Standard SPM

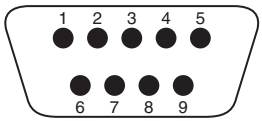

At Z-Purge SPM (Internal)

5.5.3 General System Wiring

Wiring locations should be identified and wired per local electrical code before attaching connectors to the cables. The RS-422 standard recommends shielded 24 AWG copper conductor or twisted telephone cable with a shunt capacitance of less than 16 pF per foot.

Caution

Secure all housings to the interface connectors using the clamping screws provided on the housing. Use of the clamping screws will prevent accidental disconnection.

Pin Designations		Signal
Standard SPM	Z-Purge SPM	
A	1	Ground
D	6	Transmit +
E	7	Transmit –
F	8	Receive +
G	9	Receive –

5.5.4 How to Set Date and Time

The internal clock/calendar is factory set for Central Standard Time. Time is displayed in 24-hour format, and leap year is automatically updated.

1. Make sure main power switch (8) is on.
2. Open tape load lever (18).
3. The digital display (19) will show either (AC LINE) (for line systems) or (BATTERY CONDITION) (for battery backup/portable systems).
4. Press and hold alarm test key (10) until the date shows on the display. The format is MM/DD/YY. The field that is blinking is to be changed.
5. Press alarm reset (11) to change the number in the blinking field. When the field is correct, press alarm test (10) to move to the next field.
6. Continue by alternating alarm test (10) and alarm reset (11) to move to new fields and to change numbers in the blinking field. After setting the correct date, the display changes to time of day in the format HH:MM.

7. Press and hold alarm test (10). The display (19) will show (TIME SET) to confirm the new entry. If the display reads (ERROR), you made an invalid entry in one of the fields. Repeat steps 3 through 7 to find and correct the error.
8. Close the tape load lever (18) to begin monitoring.

5.6 Portable Operation

The Portable option of the SPM operates directly from the battery charger assembly. The Portable SPM should be connected to an AC power source via its battery charger at all times to maintain a full charge. When not in use as a portable monitor, the Portable SPM should be connected to AC power source via its battery charger to keep the batteries fully charged. For ease in transport, the Portable SPM incorporates a carrying handle and a carrying strap.

5.6.1 Battery Operation

When fully charged, the internal batteries provide up to eight hours of continuous monitoring, but frequent alarm conditions or the operations of some options will reduce operating time under battery power.

The Battery Backup and Portable SPM change to battery power when disconnected from the charger.

The Battery Backup and Portable SPM automatically switch to battery backup mode when there is an interruption on the AC line. When the Battery Backup SPM changes to battery power, there is no display or relay signal to report that this condition has occurred.

5.6.2 How to Extend Battery Life

The SPM instrument fault relay is a “fail-safe” relay. The relay remains asserted until the SPM detects an instrument fault condition or if the instrument power is turned off or lost.

To extend battery life, disable the instrument fault relay by pressing the relay disable key (14). With the instrument relay disabled, the battery life can be extended from eight hours up to nine hours.

Note:

If the relays are disabled, the external alarm(s) will not activate. The relays will also be disabled if the SPM enters a fault condition or if power is turned off or lost.

5.6.3 Battery Power Status

The front panel display (19) will show battery condition. There are three possible messages:

(BATT OK): When the tape load lever (18) is open, this message reports that the battery voltage is in the normal range for portable or battery backup operation.

(BATT LOW): This message appears when there is 60 to 90 minutes of running time left on the batteries.

(RECHARGE BATTERY NOW): This message scrolls across the display when battery power is insufficient for monitoring. The System LED flashes, the audio alarm sounds, and the instrument relay de-energizes. Monitoring stops until the instrument is reconnected to AC power via the battery charger and the alarm reset key (11) is pushed.

If the batteries fail to hold a charge, they may need to be replaced. Replace only with P/N 104403 sealed lead acid battery, 12 VDC, 2.7 Ah. Two batteries are required.

5.6.4 Battery Charger

The supplied battery charger plugs into a standard grounded electrical outlet and the cable connects to the power receptacle (2). After attaching the cable, finger tighten the threaded collar to ensure a proper connection. When the charger is not connected to the SPM, replace and tighten the dust cap to prevent accidental shorting and contamination. For proper SPM operation, make sure that the charger is connected to a grounded AC power source.

Warning

Connect the cable to the SPM receptacle before plugging the charger into the AC power receptacle.

5.7 Extended Sample Option

This option provides a high capacity, factory installed pump to allow the SPM to monitor sample points up to 30 meters (100 feet) away from the unit. The option includes a supply of sample tubing pre-cut to the proper 100-foot length. The sample tubing is FEP Teflon 1/8" I.D. x 1/4" O.D. and the exhaust tubing is 3/16" I.D. x 1/4" O.D. Polypropylene. 50 feet of exhaust tubing is supplied with this option.

5.7.1 Restricted Target Gases

Certain target gases carry sample line limitations that prevent use of the extended sample option. See ***Section 4.10*** for information on sample line limitations.

5.7.2 Connecting the Sample Line

Sample flow rate is factory set, and no field adjustments are necessary when tubing is 30 meters (100 feet). If you wish to have a shorter sample line, the tubing can be coiled, but make sure that the tubing does not have any sharp bends or kinks. If shorter tubing is required, the tubing may be cut. However, flow rate may increase, giving higher readings.

Warning

On older units without a sample fitting retainer ring, a second wrench must be used to hold the base of the fitting stationary during loosening and tightening.

Insert the sample tubing into the sample inlet fitting (15). To insert tubing:

1. Loosen the sample fitting by turning the fitting counterclockwise.
2. Insert tubing until the tubing is firmly seated against the fitting body.
3. Tighten the fitting by turning the fitting clockwise until finger-tight.
4. Complete the assembly by tightening the fitting three-quarter turn (clockwise) with a wrench. Turn the fitting clockwise until the fitting holds the tubing firmly. DO NOT OVERTIGHTEN.

5.7.3 Connecting the Exhaust Line

To install exhaust tubing, push the end of the tube into the exhaust port (24) until it seats fully inside the fitting body. To release the tubing, push the small gray collar in while pulling the tubing out.

5.8 Pole Mount Kit

The Pole Mount Kit option allows the SPM to be securely mounted in a local or remote location when a wall mount configuration is not feasible. The kit contains four pole clamps, eight flat washers and eight screws.

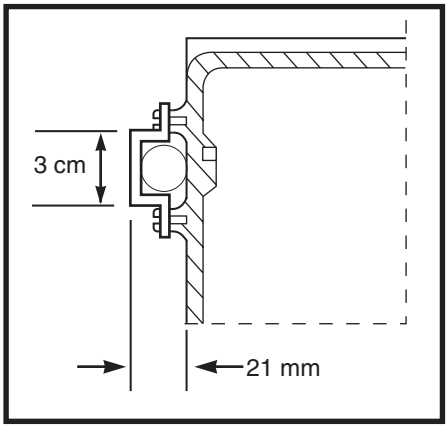

Caution

For safe, reliable monitoring operation, use the pole clamps for mounting only on horizontal poles. Attachment to vertical poles, while mechanically possible, will not hold unit securely in position.

The pole center lines are to be 19 cm (7-1/2 inches) apart. As the pole clamps allow some limited flexibility in diameter of pipe or tubing, the size and type of mounting poles are to be determined by the installer.

After the pole clamps have been fastened to the enclosure, the unit must be secured to an acceptable fixture. Make sure the installation conforms to the local wiring/installation code.

5.9 Heater Option

The heater option allows the SPM to operate from -20°C to +40°C (-4°F to +104°F) ambient. The thermostatically controlled heater functions automatically whenever the unit is connected to an AC source. The heater operates directly from the line cord independent of the main unit power switch.

When the heater option is installed, the front panel has two amber neon lights mounted on the left side below the Chemcassette® holder.

The Power In LED (80) glows when the unit is receiving power. It shows that power is available to be automatically applied to the heater if required. The Power In LED (80) does not indicate that the SPM is monitoring. The main power switch (8) must be on to activate the SPM for monitoring which will be indicated by the green system status LED (9).

The Heater On LED (81) glows when the heater is operating and the internal temperature is less than +10°C (+50°F).

5.9.1 Installation and Operation

The SPM should be plugged into an AC voltage source at all times to allow a constant temperature to be maintained in the unit.

For initial installation, a warm-up time of up to one hour may be required before monitoring. This warm-up time will vary with the ambient temperature. Set the main power switch (8) off and observe that the Power In LED (80) is lighted. If the Heater On LED (81) is not lighted, the main power switch can be switched on to begin monitoring.

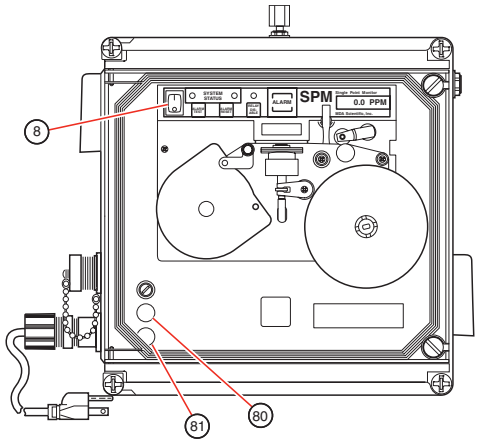

Legend

8. Main power switch

80. Power In LED

81. Heater On LED

If the SPM is disconnected from an AC source for more than 30 minutes, the SPM must be allowed to warm up for up to one hour before setting the main power switch (8) on.

Caution

The surface of the front panel may be HOT. Use care when replacing fuse and/or Chemcassette®.

Caution

- **The main power switch (8) does not turn off power to the heater.**
- **Power to the heater is applied whenever the internal unit temperature is +10°C (+50°F) or below with the main power switch (8) in either "on" or "off" position.**
- **Disconnect the power source when wiring the alarm contacts and during servicing as required.**

5.9.2 Condensation

A sudden extreme temperature change may cause moisture in the SPM to condense. The optics block may fog, causing the SPM to show a gas concentration. Allow ample time for the SPM to warm up before attempting to monitor.

5.9.3 High-temperature Fault

If the internal temperature exceeds +50°C (+122°F), the SPM will go into fault mode. (FAULT #36) will appear on the LED display, the audio alarm will sound, and the instrument fault relay will de-energize. If the Heater On LED (81) is lighted, then the heater thermostat is at fault. Contact Honeywell Analytics Service for assistance.

If the internal temperature exceeds +70°C (+158°F), the power to the heater and instrument will be turned off. The SPM will not power up or monitor until the internal temperature falls below +40°C (+104°F). All relay outputs and alarms will revert to the power off condition.

Note:

Certain target chemicals to be monitored may or may not be in the gas or vapor state at low temperatures. This depends on the vapor pressure/temperature of the target chemical.

5.10 Remote Reset Option

The Remote Reset Option allows remote activation of the SPM alarm reset function. This option allows SPM alarms and faults to be reset without local presence at the SPM monitoring site.

The illustration shows the 14-pin circular connector (3) for standard SPM units. Pins E and N provide the two contacts for remote reset. On instruments fitted with the Z-Purge option, see ***Section 5.2.6*** for instructions on interior wiring of remote reset connections.

The customer is to supply the remote device providing a momentary contact closure of at least 0.1 seconds. External circuit resistance of 1500 Ohms or less with current rating greater than 3.5 mA. See *Section 2.4.1* for more information on SPM output connections and relay terminal status.

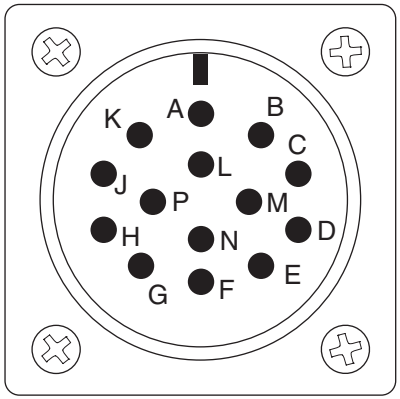

5.11 Two-point Operation

The 2 x 15-meter (50 foot) option allows the SPM to monitor two points, each point being 15 meters (50 feet) from the SPM. An SPM installed with this option will not be able to signal the specific point at which a release has occurred, but will indicate that one of the monitoring points is in a gas condition. The necessary sample tubing is supplied with this option. 50 feet of polypropylene exhaust tubing (3/16" I.D. x 1/4" O.D.) is included with this option. A larger capacity pump is also provided.

Warning

1. **The sample tubing enclosed with your SPM must not be altered in any way. This option is intended for ambient monitoring only. Sampling at two points with different pressures should not be done.**
2. **The Two-point Option only applies for target gases that allow 50 feet of sample line. See Section 4.10 for information on sample line limitations.**

5.11.1 Installation

The two pieces of 15-meter (50 foot) tubing must be installed by inserting the end of the tubing into the fitting and tightening with an adjustable wrench, as shown.

Route the tubing to your monitoring points. DO NOT CUT OR SHORTEN TUBING. Excess tubing can be coiled to take up any slack. Make sure that there are no kinks or sharp bends in the tubing.

5.11.2 Operation

The operation of the 2-point SPM is the same as a basic SPM with the exception of longer sample lines and a diluted concentration. The SPM draws the sample from two points. If a release occurs at one point, the other point may still draw a clean sample. The mixing of a clean sample and an actual release will form a diluted sample. The concentration that appears on the SPM display will indicate a combined (diluted) concentration. No attempts have been made to correct for this dilution since the ratio of a clean sample versus an actual release can vary.

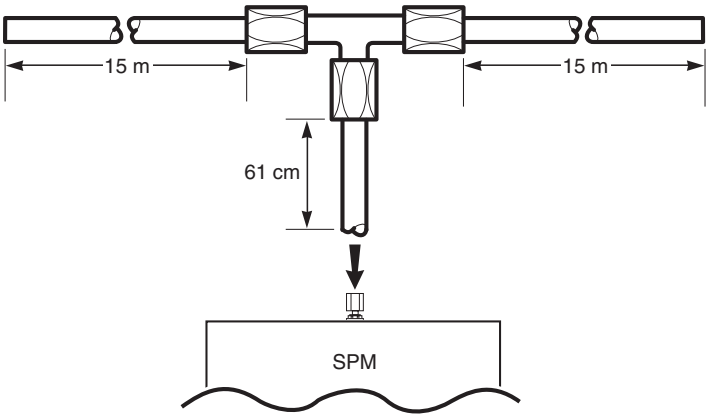

5.12 Non-latching Alarm Option

The non-latching alarm option will automatically reset any gas alarm when the current concentration has dropped below the Alarm Level 1 set point. The SPM will not reset or modify any alarm indication while the detected gas concentration is at or above the Alarm Level 1 set point.

5.13 Remote Trigger Option

The Remote Trigger option will control the instrument's monitoring. Normally, Model SPM is a continuous-monitor instrument. The Remote Trigger option allows the SPM to monitor on command.

The SPM waits for a remote signal. When triggered, the SPM monitors for one sample period. At the end of the sample period, the instrument posts the results based on the calculated gas concentration (display, 4-20 mA, etc.). The SPM then looks for the next remote trigger.

If at the end of the sample period there is no remote trigger, the SPM pauses to await another trigger. When a trigger is sent, the SPM sets the 4-20 mA output to 4 mA, and shows (SAMPLING) on the display.

If at the end of the sample period there is another remote trigger request, the SPM shows the concentration of the completed sample and begins another sample period. The 4-20 mA output reflects the value of the last gas sample.

5.14 Modification for Diisocyanate Monitoring in High Humidities

At high relative humidities (>85% RH), moisture build-up can occur in the optics of the monitor and subsequently dampen the detection tape. The Diisocyanates Chemcassette®, normally yellow, becomes transparent when dampened. This transparency is viewed by the monitor's optics and can result in low but false ppb readings in moist air, even though the typical reddish-pink reaction stain will be absent.

An optional optics modification to accommodate this moisture effect is available through Honeywell Analytics' Service Department. It consists of a white, porous frit which is fitted in the nose-piece behind the Chemcassette and optics block. With this modification, the optics no longer "see" through a moist tape, and false positives are eliminated. Because the frit is porous, proper flow rates are still maintained, as are accurate repeatable readings in the presence of diisocyanates.

Caution

SPM units will not detect gas if no tape is present. Therefore, you must be aware of the amount of tape on the supply reel(s).

An end of tape condition will no longer be detectable by the modified optics since the frit simulates the presence of tape in the optics even when no tape is present. Since there is no end-of-tape fault, you must be aware of the

amount of tape on your instrument's supply reel. Visual observation of the Chemcassette supply is required.

If high humidities are causing false ppb readings with your SPM monitor, contact Honeywell Analytics' Service Department to arrange for the optics modification to be installed. Request P/N 870708 for the SPM.

A Bi-Directional Communications Protocol

A.1 Introduction

A.1.1 Overview

If you have purchased the Digital RS422 output option (P/N 870931 or 870995 for Z-Purge units only), your SPM instrument is equipped with a serial remote device communication port. The data available from this communication port is intended to help you monitor SPM operation from another location. It will also allow you to gather gas concentration data for any use or analysis.

This manual will supply you with the technical information for the use and correct operation of the SPM protocol, which will allow you to communicate with this sophisticated modular instrument. The SPM protocol was designed and developed by Honeywell Analytics, and is considered proprietary to Honeywell Analytics.

The following pages will describe to you what protocol is, what the pieces are and how it is used. It will also offer suggestions on most effective use.

The SPM protocol has been designed to be flexible and efficient. The protocol is a byte-wise protocol. That is, it is communicating information transferring bytes of data back and forth between the instrument and your computer equipment. A group of bytes is referred to as a “packet”.

A.1.2 Communication Port

Access to the SPM protocol is through the Amphenol (Bendix) connector that is located on the side of the SPM (located inside of purged units). Your SPM instrument communicates through this port. This port also allows your equipment to monitor what the SPM instrument is actually doing from a remote area. This port is designed to be bi-directional, that is, it will both send and receive data.

The SPM instrument’s communication port is indicated by a label “RS-422 output”. The signals that are present on the connector conform to RS-422 specifications. The pin-out designations may be found in Section .

Your SPM will communicate at baud rate of 9600 baud (sometimes specified as 9.6k baud). This is a fixed value, and cannot be changed or adjusted by the user. The SPM uses 8 bits per character, with one (1) stop bit and NO parity.

The SPM protocol has been designed to be flexible and efficient. The protocol is a byte-wise protocol. It communicates information by transferring bytes of data back and forth between the instrument and your computer equipment. A group of bytes is referred to as a “packet”.

The communication port in the SPM can only exchange one piece of information at a time. The SPM will only accept a packet after it has sent a packet. It will ignore any packet that your equipment sends that is not in response to an SPM packet.

The SPM protocol is also used by the available compliment of remote devices for the SPM. For example, the TGM (Toxic Gas Monitoring) System uses the SPM remote device communication port. Additionally, the SPM protocol has been designed to support multiple devices from its port, if required.

The 9 pin connector, marked as “RS-422 OUTPUT” is the connector you use. Often it is referred to as a port or as the communication port. It is a DB-9F form. Table A-1 lists the signals that are available at the Network Interface connector.

Pin Designations			Signal
Standard SPM	Z-Purge SPM	TGMS	
A	1	1	Ground
D	6	6	Transmit +
E	7	7	Transmit -
F	8	8	Receive +
G	9	9	Receive -

Table A-1: Output Signals

A.1.3 Instrument Port Configuration

The port is configured to be bi-directional and will result in the instrument periodically "polling" the user's equipment. In this mode, the SPM expects the user's equipment to be "on-line" and active at all times. That is, your equipment must accept and respond to each SPM command. This polling is the user's opportunity to give an instruction or command to the SPM.

A.1.4 Communication Port Timeout

The SPM allows the user's equipment to issue a response back to the SPM for each communication that occurs. After each query, the SPM waits for one second for the response. This period is known as a time-out period. If your equipment fails to send an acknowledgement of some form to the SPM within this time-out period, the SPM will ignore all further communications sent to it until the SPM institutes another transmission.

Note

The SPM will perform one re-transmission of the data.

If the SPM is configured to insure communications at regular intervals, and if it has been more than three seconds since the last packet was sent, than the SPM will send a "No Operation" (NOP) packet.

A.1.5 Protocol Specifics

Data and Packets

A byte is a piece of data. It is a way to indicate information. It is composed of 8 bits of information. A bit is the smallest possible piece of information. There can only be two possible values for a bit: 1 or 0 (true or false). A byte can have a numeric value of anything between 0 and 255. The number may be interpreted in a manner other than a number, for example as a letter.

Bytes are often represented as hexadecimal or base 16 numbers. In hexadecimal, the values 10 through 15 are represented by the letters A through F. For example, 13 is represented by 0D in hexadecimal and 27 is represented by 1B.

Using ASCII characters where HEX 65 (HEX 41) was the letter "A", HEX 66 (HEX 42) was the letter "B", HEX 67 (HEX 43) was a "C" and so on, a message could be written as these numbers, and each number would be a byte. For example, to say "BAD" would be 66, 65, 68 (HEX 42, 41, 44).

The collection of the above three bytes (which made our message) may be referred to as a packet, as these bytes are always associated with each other.

Just as all words are not the same length (number of letters), packets may vary in length. One way to denote the size of the words is to put the number of letters you have in your word as the first number in your packet. Your data packet containing the word (or command) "BAD" will be 3, 66, 65, 68.

Check-Character (Checksum)

During the transmission of the packet, an error may change the value of the data. In our example, for instance, the packet of 3, 66, 65, 68 is now 3, 66, 61, 68. One way to determine that the numbers you receive are the same as the numbers that were sent is to add a check-character to the packet. A check-character is a method of assigning a value to the packet to check if any of your bytes have been modified.

If all the data bytes were to be added together and this sum made into a byte, that byte could be called a check-character, or sometimes called a checksum. For your packet 3+66+65+68 is equal to 202. You would place this number at the end of your packet: 3, 66, 65, 68, 202. By adding all the bytes together, the sum should match the value of the check-character. An error is indicated if the two numbers do not match each other. If there is an error, then either some of the data has been modified, or the check-character itself was modified.

For the SPM, the check-character is the negated sum of all the bytes in your packet. As above, our packet would be 3, 66, 65, 68, -202. For this packet, the sum of the bytes added to the check-character must equal zero (0). Any other result indicates there is an error with your data.

The SPM's data within the packet is interpreted in a somewhat different manner than the above example. The data is composed of two sections: a command and one or more parameters. The command indicates the type of data. Another way to view this is: the command tells the type of packet and parameters. Each and every packet will contain at least 4 data bytes: SPM DATE & TIME stamp. This data gives a date and time reference. You should insure that your SPM's date and time are set accurately.

An example of a typical communication: a packet with a command of 61 (hexadecimal value) is a FAULT type packet. The 61 indicates that this packet has been sent due to a fault. See Table A-2.

09 (HEX)	61 (HEX)	DATE (2 bytes)	TIME (2 bytes)	FAULT NO (1 byte)

Table A-2: Fault Packet

This packet is for an instrument fault. The actual fault type is found in the byte labeled as "FAULT". The remainder of the packet is 09 (HEX) for the number of bytes (9) found in this packet, DATE and TIME stamped for your reference.

Every packet the SPM sends contains an address, a length, a command and associated parameters and a check-character. The SPM assumes that all remote devices occupy address (HEX) 4D.

The SPM has been assigned an address of (HEX) 4C. It only recognizes this address.

ACK/NAK Handshake

The SPM implements a handshake scheme between itself and any other piece of equipment wishing to communicate with the SPM. The most common response back to the instrument is an "ACK". ACK stands for ACKnowledge. Your equipment sends it back to tell the SPM that the packet is ok. If, however, the check-character did not match, you may elect to send back a "NAK", which stands for NegAtive acKnowledge. A NAK indicates that a data packet has been received but the check-character did not match with the packet data. The SPM will then re-send the packet to your equipment. An ACK packet would be (all HEX): 4C, 04, 20, 90. (4C+4+20+90=0)

Normal Analysis Messages

In MONITOR Mode, the SPM will send gas concentration and alarm data. This data will be sent at the completion of the current analysis cycle. Each packet of gas concentration information will contain an alarm flag. When this flag is zero, there is no alarm for this current packet of data (that is, this point does not have a gas concentration in excess of either alarm set points).

In addition, it will send the time weighted average (TWA) information, calibration information and other data. The SPM will also send out any faults and other warnings, as appropriate.

Errors and Faults

All errors and faults the SPM detects are sent out the remote device communication port. This includes all levels: warnings, errors or faults.

Commands

Your SPM will send any one of a number of commands to your equipment. These commands are detailed in Table A-4. They are listed by both the command number and by name. All errors and faults are included in the set of possible commands.

The SPM will accept and process commands that your equipment may send to the instrument. These commands are detailed in Table A-4.

Your equipment may also send a “RESET” to the SPM, which functions as if the “RESET” button were pressed.

Table A-3 shows the typical command and data sets.

Command	Date *	Time *	Parameter(s)
1 Byte	2 Bytes	2 Bytes	(No of bytes is command dependent)

Table A-3: Command and Data Set

* In IBM-PC style format.

Table A-4 is a list of valid commands that the SPM will issue. All command codes in the following table are hexadecimal. The length of each parameter is indicated. This list is subject to change without notice.

Command Code (Hex)	Command Description	Parameters (No of Bytes)
28	NOP (No Operation)	Date (2) Time (2)
30	Gas Concentration or Alarm	Date (2) Time (2) Honeywell Gas No (1) Format Code (1) Concentration (2) Current Loop Drive (1) Alarm Flag (1)
32	Time Weighted Average (TWA) Gas Concentration	End Date (2) End Time (2) Start Date (2) Start Time (2) Honeywell Gas No (1) Format Code (1) TWA (2)
35	SPM Information (Provision for special/SER are needed)	Date (2) Time (2) Revision, Major (1) Revision, Minor (1) EPROMs Checksum (2) Honeywell Gas No (1) SPM Serial No (2) Option Flags (1)
61	Fault	Date (2) Time (2) SPM Fault No (1)

Table A-4: Valid SPM Commands

Responses

The SPM will accept a return communication for any packet it sends. Your equipment may respond back with an ACK, NAK, RESET packet or diagnostic dump.

The ACK packet is an acknowledgement to the SPM. It indicates to the SPM that the last communication was correctly received. The SPM will accept the ACK and no further action will occur.

The other packet is the NAK. This type of packet is translated as a NAK. It means that the last packet was not received correctly. Either the check-character did not match or there was some other communication error (framing, for example).

The SPM re-sends the last packet if it receives an NAK response. The SPM resends the message once. If the resend fails, the SPM will not communicate (it will wait) until the next regular communication activity occurs.

Table A-5 lists the valid response packets to the SPM.

Command Code (Hex)	Command	Command Description
20	ACK (Acknowledgement)	Indicates packet was received properly.
21	NAK (Negative Acknowledgement)	Indicates the packet was not valid. Will cause SPM to resend the last packet of information.
30	RESET	Will cause SPM to do an Alarm or Fault Reset, as if the RESET button were momentarily pressed.
31	Diagnostic Dump	The SPM will transmit the software version and checksum of the EPROM via command 35 (above).

Table A-5: Valid Response Packets to the SPM

A.2 Protocol Packet Definition

A.2.1 Packet Format

An SPM packet will follow the format described in Table A-6 when transmitting.

Byte No.	Function
1	Device Address. The address or "name" of the device this packet is directed to. It is always (HEX) 4D.
2	Packet Length (n). The length is the number of bytes to be found in this packet. It includes the address byte and the check-character byte and all bytes between.
3 through (n-1)	Command and Data. The remaining bytes within the packet are data bytes.
n	Check-character. This byte is the last character in the packet. Its value is equal to the negated summation of all previous bytes in the packet. It is the negative checksum of the packet.

Table A-6: SPM Transmission Format

Graphically, the packet appears as shown in Table A-7.

Byte 1	Byte 2	Byte 3 through (n-1)	Byte n
Device Address	Packet Length	Commands and Data Set	Check Character

Table A-7: SPM Graphic Style

A.4 SPM Protocol Command Parameter Format

Table A-8 lists the format of the command parameters as listed in the protocol document. The parameters are listed after each command in *Table A-4*.

Parameter	No of Bytes	Parameter Description/Components (no of bits)
Alarm Flag	1	In sequential monitoring, the flag may be: 0 = Concentration only 1 = Level 1 Alarm 2 = Level 2 Alarm 3 = Concentration > full scale
Concentration	2	16-bit binary value (0-65,535) indicating the computed concentration.
Current Loop Drive	1	Proportional drive that may be on the 4-20mA current loop.
Date	2	Year (7), Month (4), Day (5); Year is based from 1980; 1989 would be 89 – 80 = 9; 9 = 0 0 0 1 0 0 1
Fault Number	1	A number indicating a specific type of fault. Consult SPM manual for fault codes.
Format Code	1	Top bit indicates ppm or ppb (1= ppm). The remaining 7 bits indicate decimal position. Therefore, a parameter of (Hex) 81 (1000 0001) would have concentration indicated as xx.x ppm.
Honeywell Gas No	1	Defines gas being monitored.
Revision, Major/Minor	1	Software revision level of the SPM EPROM installed in the instrument.
SPM Serial Number	2	Serial number of the SPM instrument.
Time	2	Hours (5), Minutes (6), Seconds/2 (5)
TWA (Time Weighted Average)	2	16-bit binary value (0 to 65,535) representing the 8 hour TWA concentration value.

Table A-8: SPM Protocol Command Parameter Format

A.5 Glossary

This manual will be using the following terms when describing the SPM protocol to you.

BYTE: refers to a collection of 8 bits (or pieces) of information. A BYTE refers to this information as a single thing or quantity.

COMMUNICATION: refers to the act or process of passing digital information between two points.

DATA: refers to the information that is transferred between the SPM and your equipment. DATA refers to the information contained within a packet, whether it be concentration, date or some other piece of information.

EQUIPMENT: refers to the equipment that you plan to use to communicate with the SPM.

HANDSHAKE: refers to the process of acknowledging a communication has been received. The SPM uses ACK/NAK responses.

INSTRUMENT: refers to the SPM instrument with which you intend to interface (or communicate).

PACKET: refers to the block of information that is passed between the instrument and your equipment. A PACKET is made from many bytes of information.

PROTOCOL: refers to the manner in which the data is transferred and the format used to transfer the data. The SPM PROTOCOL refers to the PACKET of BYTES the SPM recognizes.

TIME-OUT: refers to the maximum amount of time that SPM instrument allows for the equipment to respond to a packet sent from the instrument. If the time period is exceeded, then the SPM will ignore any additional responses to it. The SPM will not go into a fault condition or fault state.

The SPM will not deactivate the communication port, but rather will transmit more data when it is appropriate.

B Warranty Statement

Chemcassette® Device Warranty Statement

All products are designed and manufactured to the latest internationally recognized standards by Honeywell Analytics under a Quality Management System that is certified to ISO 9001.

As such, this instrument (including the pump) is warranted under proper use, to the original end-user purchaser, against any defects in materials or workmanship related failures for a period of 12 months from the date of first turn-on or 18 months from delivery from Honeywell Analytics to the customer, whichever is less. Separate warranty conditions apply to the sensor cartridges limited as indicated below. During this period, Honeywell Analytics will repair or replace defective parts on an exchange basis, F.O.B. to approved service centers on a global basis.

This warranty does not cover damage caused by accident, abuse, abnormal operating conditions or extreme poisoning of the sensor cartridge.

Defective equipment must be returned to Honeywell Analytics for repair. Before returning materials for repair or replacement, the Customer must obtain a Service Event Number (SE#) by contacting Honeywell Analytics Service in advance; include a detailed report stating the nature of the defect and ship the equipment prepaid to Honeywell Analytics' factory. If no detail report is included, Honeywell Analytics reserves the right to charge an investigative fee (prices available upon request) before any repair or replacement is performed. Returned goods must detail the Service Event Number (SE#) clearly on the package.

Service in the field or at the customer's premises is not covered under these warranty terms. Time and travel expenses for on-site warranty services will be charged at Honeywell Analytics' normal billing rates. Contact your Honeywell Analytics representative for information on available Service Contracts.

Honeywell Analytics shall not be liable for any loss or damage whatsoever or howsoever occasioned which may be a direct or indirect result of the use or operation of the Contract Goods by the Buyer or any Party.

This warranty covers the gas detector and parts sold to the Buyer only by authorized distributors, dealers and representatives as appointed by Honeywell Analytics. This warranty does not cover defects attributable to improper installation, repair by an unauthorized person or the use of unauthorized accessories/parts on the product. A warranty claim will only be accepted if a proof of purchase is submitted and all conditions obtained within this Warranty are met.

Honeywell Analytics reserves the right to validate any warranty claim prior to processing. Upon acceptance of a warranty claim, Honeywell Analytics will repair or replace the defective product free of charge. The initial warranty period is not extended by virtue of any works carried out there after.

Instruments which have been repaired or replaced during the warranty period are warranted for the remainder of the unexpired portion of the original warranty period. Honeywell Analytics is released from all obligations under its warranty in the event repairs or modifications are made by persons other than its own authorized personnel, unless such work is authorized in writing by Honeywell Analytics. Honeywell Analytics is released from all obligations under its warranty in the event that detection substrates other than Honeywell Analytics' Chemcassettes® have been installed and used

in Honeywell Analytics' instruments.

Honeywell Analytics reserves the right to change this policy at any time. Contact Honeywell Analytics for the most current warranty information.

Chemcassette® Warranty

All Chemcassettes® are warranted for a period not to exceed the Chemcassette® expiration date printed on each package, and tape reel.

AMERICAS	EUROPE	REST of WORLD
Sunrise, Florida	SWITZERLAND, Uster	CHINA
Lincolnshire, Illinois	UNITED KINGDOM, Poole	Shanghai
Olathe, Kansas	FRANCE, Orly	Shenzhen
Quebec, Montreal	ITALY, Milan	ASIA PACIFIC
	SPAIN, Barcelona	S. KOREA, Seoul
	BELGIUM, Hoboken	Singapore
	GERMANY, Munich	MIDDLE EAST
	NETHERLANDS, Baam	UAE, Dubai

Find out more
www.honeywellanalytics.com

Customer business center Americas
Honeywell Analytics
400 Sawgrass Corporate Pkwy
Suite 230
Sunrise, FL 33325
Tel: +1 954 514 2700
Toll free: +1 800 538 0363
Fax: +1 954 514 2784
detectgas@honeywell.com

Customer business center Asia Pacific
Honeywell Analytics
#508, Kolon Science Valley (I)
187-10 Guro-Dong, Guro-Gu
Seoul, 152-050 Korea
Tel: +82 2 2025 0300
Fax: +82 2 2025 0329

analytics.ap@honeywell.com

Customer business centre EMEA
Life Safety Distribution AG
Wilstrasse 11-U11
CH-8610 Uster
Switzerland
Tel: +41 (0)1 943 4300
Fax: +41 (0)1 943 4398
gasdetection@honeywell.com

www.honeywell.com

970889 Rev 6
May 2007
© 2007 Honeywell Analytics

Honeywell