Check ID#: 61345
Document#: 18356
Org/Place/Person: 12867
Revenue ID#: 914388

Please type. Do not complete by hand.

FORM 1 GENERAL

EPA

I. EPA I.D. NUMBER OHD075868

LABEL ITEMS	
I. EPA I.D. NUMBER	
III. FACILITY NAME	
V. FACILITY MAILING ADDRESS	OIL00010
VI. FACILITY LOCATION	

If a preprinted label has been provided, affix it in the designated space. Review the information carefully; if any of it is incorrect, cross through it and enter the correct data in the appropriate fill-in below. Also, if any of the preprinted data is absent *(the area to the left of the label space lists the information that should appear)*, please provide it in the proper fill-in area(s) below. If the label is complete and correct, you need not complete Items I, III, V, and VI *(except VI-B which must be completed regardless)*. Complete all items if no label has been provided. Refer to the instructions for detailed item descriptions and for the legal authorizations under which this data is collected.

II. POLLUTANT CHARACTERISTICS

INSTRUCTIONS: Complete A through G to determine whether you need to submit any permit application forms to the EPA. If you answer "yes" to any questions, you must submit this form and the supplemental form listed in the parenthesis following the question. Mark "X" in the box in the third column if the supplemental form is attached. If you answer "no" to each question, you need not submit any of these forms. You may answer "no" if your activity is excluded from permit requirements; see Section C of the instructions. See also, Section D of the instructions for definitions of **bold-faced terms.**

SPECIFIC QUESTIONS	MARK 'X' YES	NO	FORM ATTACHED	SPECIFIC QUESTIONS	MARK 'X' YES	NO	FORM ATTACHED
A. Is this facility a **publicly owned treatment works** which results in a **discharge** to **waters of the U.S.?** (FORM 2A)		X		B. Does or will this facility *(either existing or proposed)* include a **concentrated animal feeding operation** or **aquatic animal production facility** which results in a **discharge** to **waters of the U.S.?** (FORM 2B)		X	
C. Is this a facility which currently results in **discharges** to **waters of the U.S.** other than those described in A or B above? (FORM 2C)	X		X	D. Is this a proposed facility *(other than those described in A or B above)* which will result in a **discharge** to **waters of the U.S.?** (FORM 2D)		X	
E. Is this a facility which does not discharge process **wastewater?** (FORM 2E)		X		F. Is this a facility which discharges stormwater associated with industrial activity? (FORM 2F)	X		X
G. Do you generate **sewage sludge** that is ultimately regulated by Part 503? Do you generate **sewage sludge** that is sent to another **facility** for treatment or blending? Do you process or derive material from **sewage sludge** that is disposed in a manner subject to Part 503? (FORM 2S)		X					

III. NAME OF FACILITY

Norfolk Southern Railway Company - Wheelersburg Terminal

IV. FACILITY CONTACT

A. NAME & TTILE *(last, first, title)*	B. PHONE *(area code & no.)*
East, Michael, Engineer Environmental Operations	(540) 524 - 4994

V. FACILITY MAILING ADDRESS

A. STREET OR P.O. BOX: 110 Franklin Road, S.E., Box 13

B. CITY OR TOWN	C. STATE	D. ZIP CODE
Roanoke	VA	24042

VI. FACILITY LOCATION

A. STREET, ROUTE NO. OR OTHER SPECIFIC IDENTIFIER: 914 Hayport Road

B. COUNTY NAME: Scioto

C. CITY OR TOWN	D. STATE	E. ZIP CODE	F. COUNTY CODE (if known)
Wheelersburg	OH	45694	

PAID
Amount 200.00 Date 11/15/12
Check# 8956087 Date 11/8/12

EPA Form 3510-1 (Rev. for Ohio EPA use 2/06)

CONTINUE ON REVERSE

Click to clear all entered information (on both pages of this form) CLEAR

CONTINUED FROM THE FRONT

VII. SIC CODES *(4-digit, in order of priority)*

A. FIRST		B. SECOND	
4011	*(specify)* Railroads, Line Haul Operating		*(specify)*
C. THIRD		**D. FOURTH**	
	(specify)		*(specify)*

VIII. OPERATOR INFORMATION

A. NAME	B. Is the name listed in Item VIII-A also the owner?
Norfolk Southern Railway Company	☒ Yes ☐ No

C. STATUS OF OPERATOR *(Enter the appropriate letter into the answer box; if "Other", specify.)*			D. PHONE *(area code & no.)*
F = FEDERAL S = STATE P = PRIVATE	M = PUBLIC *(other than federal or state)* O = OTHER *(specify)*	P	*(specify)*	(404) 582 - 4239

E. STREET OR P.O. BOX
1200 Peachtree Street, N.E., Box 13

F. CITY OR TOWN	G. STATE	H. ZIP CODE	IX. INDIAN LAND
Atlanta	GA	30309	Is this facility located on Indian lands? ☐ Yes ☒ No

X. EXISTING ENVIRONMENTAL PERMITS

A. NPDES *(Discharges to surface water)*	D. PSD *(Air emissions from proposed sources)*	
0IL00010*ED		
B. UIC *(Underground injection of fluids)*	**E. OTHER** *(specify)*	
		(specify)
C. RCRA *(Hazardous waste)*	**F. OTHER** *(specify)*	
		(specify)

XI. MAP

Attach to this application a topographical map of the area extending to at least one mile beyond property boundaries. The map must show the outline of the facility, the location of each of its existing and proposed intake and discharge structures, each of its hazardous waste treatment, storage, or disposal facilities, and each well where it injects fluids underground. Include all springs, rivers, and other surface water bodies in the map area. See instructions for precise requirements.

XII. NATURE OF BUSINESS *(provide a brief description)*

Coal handling, storage, and transfer.

XIII. CERTIFICATION *(see instructions)*

I certify under penalty of law that I have personally examined and am familiar with the information submitted in this application and all attachments and that, based on my inquiry of those persons immediately responsible for obtaining the information contained in the application, I belive that the information is true, accurate, and complete. I am aware that there are significant penalties for submitting false information, including the possibility of fine and imprisonment.

A. NAME & OFFICIAL TITLE *(type or print)*	B. SIGNATURE	C. DATE SIGNED
R.P. Russell, System Director Environmental Protection	R.P. Russell	11/8/12

COMMENTS FOR OFFICIAL USE ONLY

Please print or type in the unshaded areas only.

EPA I.D. NUMBER (*copy from Item 1 of Form 1*)
0IL00010*ED

Form Approved.
OMB No. 2040-0086.
Approval expires 3-31-98.

FORM **2C** NPDES

EPA

U.S. ENVIRONMENTAL PROTECTION AGENCY
APPLICATION FOR PERMIT TO DISCHARGE WASTEWATER
EXISTING MANUFACTURING, COMMERCIAL, MINING AND SILVICULTURE OPERATIONS
Consolidated Permits Program

I. OUTFALL LOCATION

For each outfall, list the latitude and longitude of its location to the nearest 15 seconds and the name of the receiving water.

A. OUTFALL NUMBER (*list*)	B. LATITUDE			C. LONGITUDE			D. RECEIVING WATER (*name*)
	1. DEG.	2. MIN.	3. SEC.	1. DEG.	2. MIN.	3. SEC.	
002	38	41	50	82	52	23	Unnamed Tributary to Patton Run

II. FLOWS, SOURCES OF POLLUTION, AND TREATMENT TECHNOLOGIES

A. Attach a line drawing showing the water flow through the facility. Indicate sources of intake water, operations contributing wastewater to the effluent, and treatment units labeled to correspond to the more detailed descriptions in Item B. Construct a water balance on the line drawing by showing average flows between intakes, operations, treatment units, and outfalls. If a water balance cannot be determined (*e.g., for certain mining activities*), provide a pictorial description of the nature and amount of any sources of water and any collection or treatment measures.

B. For each outfall, provide a description of: (1) All operations contributing wastewater to the effluent, including process wastewater, sanitary wastewater, cooling water, and storm water runoff; (2) The average flow contributed by each operation; and (3) The treatment received by the wastewater. Continue on additional sheets if necessary.

1. OUT-FALL NO. (*list*)	2. OPERATION(S) CONTRIBUTING FLOW		3. TREATMENT		
	a. OPERATION (*list*)	b. AVERAGE FLOW (*include units*)	a. DESCRIPTION	b. LIST CODES FROM TABLE 2C-1	
002	Storm Water Runoff	0.1773 mgd	Primary Settling Pond	1-U	
			Secondary Settling Pond	1-U	
			Final Settling Pond	1-U	
			Discharge to Surface Water	4-A	

OFFICIAL USE ONLY (*effluent guidelines sub-categories*)

CONTINUED FROM THE FRONT

C. Except for storm runoff, leaks, or spills, are any of the discharges described in Items II-A or B intermittent or seasonal?

☐ YES (*complete the following table*) ☑ NO (*go to Section III*)

1. OUTFALL NUMBER (*list*)	2. OPERATION(s) CONTRIBUTING FLOW (*list*)	3. FREQUENCY		4. FLOW				
		a. DAYS PER WEEK (*specify average*)	b. MONTHS PER YEAR (*specify average*)	a. FLOW RATE (*in mgd*)		B. TOTAL VOLUME (*specify with units*)		C. DURATION (*in days*)
				1. LONG TERM AVERAGE	2. MAXIMUM DAILY	1. LONG TERM AVERAGE	2. MAXIMUM DAILY	
NA	NA	NA	NA	NA	NA	NA	NA	NA

III. PRODUCTION

A. Does an effluent guideline limitation promulgated by EPA under Section 304 of the Clean Water Act apply to your facility?

☐ YES (*complete Item III-B*) ☑ NO (*go to Section IV*)

B. Are the limitations in the applicable effluent guideline expressed in terms of production (*or other measure of operation*)?

☐ YES (*complete Item III-C*) ☑ NO (*go to Section IV*)

C. If you answered "yes" to Item III-B, list the quantity which represents an actual measurement of your level of production, expressed in the terms and units used in the applicable effluent guideline, and indicate the affected outfalls.

1. AVERAGE DAILY PRODUCTION			2. AFFECTED OUTFALLS (*list outfall numbers*)
a. QUANTITY PER DAY	b. UNITS OF MEASURE	c. OPERATION, PRODUCT, MATERIAL, ETC. (*specify*)	
NA	NA	NA	NA

IV. IMPROVEMENTS

A. Are you now required by any Federal, State or local authority to meet any implementation schedule for the construction, upgrading or operations of wastewater treatment equipment or practices or any other environmental programs which may affect the discharges described in this application? This includes, but is not limited to, permit conditions, administrative or enforcement orders, enforcement compliance schedule letters, stipulations, court orders, and grant or loan conditions.

☐ YES (*complete the following table*) ☑ NO (*go to Item IV-B*)

1. IDENTIFICATION OF CONDITION, AGREEMENT, ETC.	2. AFFECTED OUTFALLS		3. BRIEF DESCRIPTION OF PROJECT	4. FINAL COMPLIANCE DATE	
	a. NO.	b. SOURCE OF DISCHARGE		a. REQUIRED	b. PROJECTED
NA	NA	NA	NA	NA	NA

B. OPTIONAL: You may attach additional sheets describing any additional water pollution control programs (*or other environmental projects which may affect your discharges*) you now have underway or which you plan. Indicate whether each program is now underway or planned, and indicate your actual or planned schedules for construction.

☐ MARK "X" IF DESCRIPTION OF ADDITIONAL CONTROL PROGRAMS IS ATTACHED

 CONTINUE ON PAGE 3

EPA I.D. NUMBER (*copy from Item 1 of Form 1*)
0IL00010*ED

CONTINUED FROM PAGE 2

V. INTAKE AND EFFLUENT CHARACTERISTICS

A, B, & C: See instructions before proceeding – Complete one set of tables for each outfall – Annotate the outfall number in the space provided.
NOTE: Tables V-A, V-B, and V-C are included on separate sheets numbered V-1 through V-9.

D. Use the space below to list any of the pollutants listed in Table 2c-3 of the instructions, which you know or have reason to believe is discharged or may be discharged from any outfall. For every pollutant you list, briefly describe the reasons you believe it to be present and report any analytical data in your possession.

1. POLLUTANT	2. SOURCE	1. POLLUTANT	2. SOURCE
NA	NA	NA	NA

VI. POTENTIAL DISCHARGES NOT COVERED BY ANALYSIS

Is any pollutant listed in Item V-C a substance or a component of a substance which you currently use or manufacture as an intermediate or final product or byproduct?

☐ YES (*list all such pollutants below*) ☑ NO (*go to Item VI-B*)

NA

CONTINUED FROM THE FRONT

VII. BIOLOGICAL TOXICITY TESTING DATA

Do you have any knowledge or reason to believe that any biological test for acute or chronic toxicity has been made on any of your discharges or on a receiving water in relation to your discharge within the last 3 years?

☐ YES (*identify the test(s) and describe their purposes below*) ☑ NO (*go to Section VIII*)

NA

VIII. CONTRACT ANALYSIS INFORMATION

Were any of the analyses reported in Item V performed by a contract laboratory or consulting firm?

☑ YES (*list the name, address, and telephone number of, and pollutants analyzed by, each such laboratory or firm below*) ☐ NO (*go to Section IX*)

A. NAME	B. ADDRESS	C. TELEPHONE (*area code & no.*)	D. POLLUTANTS ANALYZED (*list*)
REIC Labs	P.O. Box 286 225 Airport Industrial Park Road Beaver, WV 25813	(304) 255-2500	All pollutants required by the existing NPDES permit.

IX. CERTIFICATION

I certify under penalty of law that this document and all attachments were prepared under my direction or supervision in accordance with a system designed to assure that qualified personnel properly gather and evaluate the information submitted. Based on my inquiry of the person or persons who manage the system or those persons directly responsible for gathering the information, the information submitted is, to the best of my knowledge and belief, true, accurate, and complete. I am aware that there are significant penalties for submitting false information, including the possibility of fine and imprisonment for knowing violations.

A. NAME & OFFICIAL TITLE (*type or print*)	B. PHONE NO. (*area code & no.*)
R.P. Russell, System Director Environmental Protection	(404) 582-4456
C. SIGNATURE R.P. Russell	D. DATE SIGNED 11/12/12

PLEASE PRINT OR TYPE IN THE UNSHADED AREAS ONLY. You may report some or all of this information on separate sheets (*use the same format*) instead of completing these pages. SEE INSTRUCTIONS.

EPA I.D. NUMBER (*copy from Item 1 of Form 1*): 0IL00010*ED

V. INTAKE AND EFFLUENT CHARACTERISTICS *(continued from page 3 of Form 2-C)* — OUTFALL NO. 002

PART A –You must provide the results of at least one analysis for every pollutant in this table. Complete one table for each outfall. See instructions for additional details.

1. POLLUTANT	2. EFFLUENT a. MAXIMUM DAILY VALUE (1) CONCENTRATION	(2) MASS	b. MAXIMUM 30 DAY VALUE (*if available*) (1) CONCENTRATION	(2) MASS	c. LONG TERM AVRG. VALUE (*if available*) (1) CONCENTRATION	(2) MASS	d. NO. OF ANALYSES	3. UNITS (*specify if blank*) a. CONCEN-TRATION	b. MASS	4. INTAKE (*optional*) a. LONG TERM AVERAGE VALUE (1) CONCENTRATION	(2) MASS	b. NO. OF ANALYSES
a. Biochemical Oxygen Demand (*BOD*)	Waiver Requested - Pollutant not required to be analyzed by existing permit and not expected to be present.											
b. Chemical Oxygen Demand (*COD*)	Waiver Requested - Pollutant not required to be analyzed by existing permit and not expected to be present.											
c. Total Organic Carbon (*TOC*)	Waiver Requested - Pollutant not required to be analyzed by existing permit and not expected to be present.											
d. Total Suspended Solids (*TSS*)	41.5		27.5		6.95		64	mg/L				
e. Ammonia (*as N*)	Waiver Requested - Pollutant not required to be analyzed by existing permit and not expected to be present.											
f. Flow	VALUE 7.754		VALUE 0.6957		VALUE 0.1773		974	mgd		VALUE		
g. Temperature (*winter*)	VALUE Ambient		VALUE Ambient		VALUE Ambient		NA	°C		VALUE		
h. Temperature (*summer*)	VALUE Ambient		VALUE Ambient		VALUE Ambient		NA	°C		VALUE		
i. pH	MINIMUM 6.92	MAXIMUM 7.59	MINIMUM 6.97	MAXIMUM 7.59			64	STANDARD UNITS				

PART B – Mark "X" in column 2-a for each pollutant you know or have reason to believe is present. Mark "X" in column 2-b for each pollutant you believe to be absent. If you mark column 2a for any pollutant which is limited either directly, or indirectly but expressly, in an effluent limitations guideline, you must provide the results of at least one analysis for that pollutant. For other pollutants for which you mark column 2a, you must provide quantitative data or an explanation of their presence in your discharge. Complete one table for each outfall. See the instructions for additional details and requirements.

1. POLLUTANT AND CAS NO. (*if available*)	2. MARK "X" a. BELIEVED PRESENT	b. BELIEVED ABSENT	3. EFFLUENT a. MAXIMUM DAILY VALUE (1) CONCENTRATION	(2) MASS	b. MAXIMUM 30 DAY VALUE (*if available*) (1) CONCENTRATION	(2) MASS	c. LONG TERM AVRG. VALUE (*if available*) (1) CONCENTRATION	(2) MASS	d. NO. OF ANALYSES	4. UNITS a. CONCEN-TRATION	b. MASS	5. INTAKE (*optional*) a. LONG TERM AVERAGE VALUE (1) CONCENTRATION	(2) MASS	b. NO. OF ANALYSES
a. Bromide (24959-67-9)		X												
b. Chlorine, Total Residual		X												
c. Color		X												
d. Fecal Coliform		X												
e. Fluoride (16984-48-8)		X												
f. Nitrate-Nitrite (*as N*)		X												

EPA-R5-2014-0065572F0000475

ITEM V-B CONTINUED FROM FRONT

1. POLLUTANT AND CAS NO. (*if available*)	2. MARK "X"		3. EFFLUENT							4. UNITS		5. INTAKE (*optional*)		
	a. BELIEVED PRESENT	b. BELIEVED ABSENT	a. MAXIMUM DAILY VALUE		b. MAXIMUM 30 DAY VALUE (*if available*)		c. LONG TERM AVRG. VALUE (*if available*)		d. NO. OF ANALYSES	a. CONCEN-TRATION	b. MASS	a. LONG TERM AVERAGE VALUE		b. NO. OF ANALYSES
			(1) CONCENTRATION	(2) MASS	(1) CONCENTRATION	(2) MASS	(1) CONCENTRATION	(2) MASS				(1) CONCENTRATION	(2) MASS	
g. Nitrogen, Total Organic (*as N*)		X												
h. Oil and Grease		X												
i. Phosphorus (as P), Total (7723-14-0)		X												
j. Radioactivity														
(1) Alpha, Total		X												
(2) Beta, Total		X												
(3) Radium, Total		X												
(4) Radium 226, Total		X												
k. Sulfate (*as SO_4*) (14808-79-8)		X												
l. Sulfide (*as S*)		X												
m. Sulfite (*as SO_3*) (14265-45-3)		X												
n. Surfactants		X												
o. Aluminum, Total (7429-90-5)		X												
p. Barium, Total (7440-39-3)		X												
q. Boron, Total (7440-42-8)		X												
r. Cobalt, Total (7440-48-4)		X												
s. Iron, Total (7439-89-6)	X		1560		1048.5		306		64	ug/L				
t. Magnesium, Total (7439-95-4)		X												
u. Molybdenum, Total (7439-98-7)		X												
v. Manganese, Total (7439-96-5)	X		1330		1210		339.5		64	ug/L				
w. Tin, Total (7440-31-5)		X												
x. Titanium, Total (7440-32-6)		X												

 CONTINUE ON PAGE V-3

EPA-R5-2014-006572F0000475

EPA-R5-2014-006572F0000475

EPA I.D. NUMBER (*copy from Item 1 of Form 1*)	OUTFALL NUMBER
0IL00010*ED	002

CONTINUED FROM PAGE 3 OF FORM 2-C

PART C - If you are a primary industry and this outfall contains process wastewater, refer to Table 2c-2 in the instructions to determine which of the GC/MS fractions you must test for. Mark "X" in column 2-a for all such GC/MS fractions that apply to your industry and for ALL toxic metals, cyanides, and total phenols. If you are not required to mark column 2-a (*secondary industries, nonprocess wastewater outfalls, and nonrequired GC/MS fractions*), mark "X" in column 2-b for each pollutant you know or have reason to believe is present. Mark "X" in column 2-c for each pollutant you believe is absent. If you mark column 2a for any pollutant, you must provide the results of at least one analysis for that pollutant. If you mark column 2b for any pollutant, you must provide the results of at least one analysis for that pollutant if you know or have reason to believe it will be discharged in concentrations of 10 ppb or greater. If you mark column 2b for acrolein, acrylonitrile, 2,4 dinitrophenol, or 2-methyl-4, 6 dinitrophenol, you must provide the results of at least one analysis for each of these pollutants which you know or have reason to believe that you discharge in concentrations of 100 ppb or greater. Otherwise, for pollutants for which you mark column 2b, you must either submit at least one analysis or briefly describe the reasons the pollutant is expected to be discharged. Note that there are 7 pages to this part; please review each carefully. Complete one table (*all 7 pages*) for each outfall. See instructions for additional details and requirements.

1. POLLUTANT AND CAS NUMBER (*if available*)	2. MARK "X"			3. EFFLUENT							4. UNITS		5. INTAKE (*optional*)		
	a. TESTING REQUIRED	b. BELIEVED PRESENT	c. BELIEVED ABSENT	a. MAXIMUM DAILY VALUE		b. MAXIMUM 30 DAY VALUE (*if available*)		c. LONG TERM AVRG. VALUE (*if available*)		d. NO. OF ANALYSES	a. CONCEN-TRATION	b. MASS	a. LONG TERM AVERAGE VALUE		b. NO. OF ANALYSES
				(1) CONCENTRATION	(2) MASS	(1) CONCENTRATION	(2) MASS	(1) CONCENTRATION	(2) MASS				(1) CONCENTRATION	(2) MASS	
METALS, CYANIDE, AND TOTAL PHENOLS															
1M. Antimony, Total (7440-36-0)			X												
2M. Arsenic, Total (7440-38-2)			X												
3M. Beryllium, Total (7440-41-7)			X												
4M. Cadmium, Total (7440-43-9)			X												
5M. Chromium, Total (7440-47-3)			X												
6M. Copper, Total (7440-50-8)			X												
7M. Lead, Total (7439-92-1)			X												
8M. Mercury, Total (7439-97-6)			X												
9M. Nickel, Total (7440-02-0)			X												
10M. Selenium, Total (7782-49-2)			X												
11M. Silver, Total (7440-22-4)			X												
12M. Thallium, Total (7440-28-0)			X												
13M. Zinc, Total (7440-66-6)			X												
14M. Cyanide, Total (57-12-5)			X												
15M. Phenols, Total			X												
DIOXIN															
2,3,7,8-Tetra-chlorodibenzo-P-Dioxin (1764-01-6)			X	DESCRIBE RESULTS											

CONTINUE ON REVERSE

CONTINUED FROM THE FRONT

1. POLLUTANT AND CAS NUMBER (*if available*)	2. MARK "X"			3. EFFLUENT							4. UNITS		5. INTAKE (*optional*)		
	a. TESTING REQUIRED	b. BELIEVED PRESENT	c. BELIEVED ABSENT	a. MAXIMUM DAILY VALUE		b. MAXIMUM 30 DAY VALUE (*if available*)		c. LONG TERM AVRG. VALUE (*if available*)		d. NO. OF ANALYSES	a. CONCEN-TRATION	b. MASS	a. LONG TERM AVERAGE VALUE		b. NO. OF ANALYSES
				(1) CONCENTRATION	(2) MASS	(1) CONCENTRATION	(2) MASS	(1) CONCENTRATION	(2) MASS				(1) CONCENTRATION	(2) MASS	
GC/MS FRACTION – VOLATILE COMPOUNDS															
1V. Accrolein (107-02-8)			X												
2V. Acrylonitrile (107-13-1)			X												
3V. Benzene (71-43-2)			X												
4V. Bis (*Chloro-methyl*) Ether (542-88-1)			X												
5V. Bromoform (75-25-2)			X												
6V. Carbon Tetrachloride (56-23-5)			X												
7V. Chlorobenzene (108-90-7)			X												
8V. Chlorodi-bromomethane (124-48-1)			X												
9V. Chloroethane (75-00-3)			X												
10V. 2-Chloro-ethylvinyl Ether (110-75-8)			X												
11V. Chloroform (67-66-3)			X												
12V. Dichloro-bromomethane (75-27-4)			X												
13V. Dichloro-difluoromethane (75-71-8)			X												
14V. 1,1-Dichloro-ethane (75-34-3)			X												
15V. 1,2-Dichloro-ethane (107-06-2)			X												
16V. 1,1-Dichloro-ethylene (75-35-4)			X												
17V. 1,2-Dichloro-propane (78-87-5)			X												
18V. 1,3-Dichloro-propylene (542-75-6)			X												
19V. Ethylbenzene (100-41-4)			X												
20V. Methyl Bromide (74-83-9)			X												
21V. Methyl Chloride (74-87-3)			X												

 CONTINUE ON PAGE V-5

CONTINUED FROM PAGE V-4

1. POLLUTANT AND CAS NUMBER (*if available*)	2. MARK "X"			3. EFFLUENT							4. UNITS		5. INTAKE (*optional*)		
	a. TESTING REQUIRED	b. BELIEVED PRESENT	c. BELIEVED ABSENT	a. MAXIMUM DAILY VALUE		b. MAXIMUM 30 DAY VALUE (*if available*)		c. LONG TERM AVRG. VALUE (*if available*)		d. NO. OF ANALYSES	a. CONCEN-TRATION	b. MASS	a. LONG TERM AVERAGE VALUE		b. NO. OF ANALYSES
				(1) CONCENTRATION	(2) MASS	(1) CONCENTRATION	(2) MASS	(1) CONCENTRATION	(2) MASS				(1) CONCENTRATION	(2) MASS	
GC/MS FRACTION – VOLATILE COMPOUNDS (*continued*)															
22V. Methylene Chloride (75-09-2)			X												
23V. 1,1,2,2-Tetrachloroethane (79-34-5)			X												
24V. Tetrachloro-ethylene (127-18-4)			X												
25V. Toluene (108-88-3)			X												
26V. 1,2-Trans-Dichloroethylene (156-60-5)			X												
27V. 1,1,1-Trichloro-ethane (71-55-6)			X												
28V. 1,1,2-Trichloro-ethane (79-00-5)			X												
29V Trichloro-ethylene (79-01-6)			X												
30V. Trichloro-fluoromethane (75-69-4)			X												
31V. Vinyl Chloride (75-01-4)			X												
GC/MS FRACTION – ACID COMPOUNDS															
1A. 2-Chlorophenol (95-57-8)			X												
2A. 2,4-Dichloro-phenol (120-83-2)			X												
3A. 2,4-Dimethyl-phenol (105-67-9)			X												
4A. 4,6-Dinitro-O-Cresol (534-52-1)			X												
5A. 2,4-Dinitro-phenol (51-28-5)			X												
6A. 2-Nitrophenol (88-75-5)			X												
7A. 4-Nitrophenol (100-02-7)			X												
8A. P-Chloro-M-Cresol (59-50-7)			X												
9A. Pentachloro-phenol (87-86-5)			X												
10A. Phenol (108-95-2)			X												
11A. 2,4,6-Trichloro-phenol (88-05-2)			X												

CONTINUE ON REVERSE

CONTINUED FROM THE FRONT

1. POLLUTANT AND CAS NUMBER (*if available*)	2. MARK "X"			3. EFFLUENT							4. UNITS		5. INTAKE (*optional*)		
	a. TESTING REQUIRED	b. BELIEVED PRESENT	c. BELIEVED ABSENT	a. MAXIMUM DAILY VALUE		b. MAXIMUM 30 DAY VALUE (*if available*)		c. LONG TERM AVRG. VALUE (*if available*)		d. NO. OF ANALYSES	a. CONCEN-TRATION	b. MASS	a. LONG TERM AVERAGE VALUE		b. NO. OF ANALYSES
				(1) CONCENTRATION	(2) MASS	(1) CONCENTRATION	(2) MASS	(1) CONCENTRATION	(2) MASS				(1) CONCENTRATION	(2) MASS	
GC/MS FRACTION – BASE/NEUTRAL COMPOUNDS															
1B. Acenaphthene (83-32-9)			X												
2B. Acenaphtylene (208-96-8)			X												
3B. Anthracene (120-12-7)			X												
4B. Benzidine (92-87-5)			X												
5B. Benzo (*a*) Anthracene (56-55-3)			X												
6B. Benzo (*a*) Pyrene (50-32-8)			X												
7B. 3,4-Benzo-fluoranthene (205-99-2)			X												
8B. Benzo (*ghi*) Perylene (191-24-2)			X												
9B. Benzo (*k*) Fluoranthene (207-08-9)			X												
10B. Bis (*2-Chloro-ethoxy*) Methane (111-91-1)			X												
11B. Bis (*2-Chloro-ethyl*) Ether (111-44-4)			X												
12B. Bis (*2-Chloroisopropyl*) Ether (102-80-1)			X												
13B. Bis (*2-Ethyl-hexyl*) Phthalate (117-81-7)			X												
14B. 4-Bromophenyl Phenyl Ether (101-55-3)			X												
15B. Butyl Benzyl Phthalate (85-68-7)			X												
16B. 2-Chloro-naphthalene (91-58-7)			X												
17B. 4-Chloro-phenyl Phenyl Ether (7005-72-3)			X												
18B. Chrysene (218-01-9)			X												
19B. Dibenzo (*a,h*) Anthracene (53-70-3)			X												
20B. 1,2-Dichloro-benzene (95-50-1)			X												
21B. 1,3-Di-chloro-benzene (541-73-1)			X												

 CONTINUE ON PAGE V-7

CONTINUED FROM PAGE V-6

1. POLLUTANT AND CAS NUMBER (*if available*)	2. MARK "X"			3. EFFLUENT							4. UNITS		5. INTAKE (*optional*)		
	a. TESTING REQUIRED	b. BELIEVED PRESENT	c. BELIEVED ABSENT	a. MAXIMUM DAILY VALUE		b. MAXIMUM 30 DAY VALUE (*if available*)		c. LONG TERM AVRG. VALUE (*if available*)		d. NO. OF ANALYSES	a. CONCEN-TRATION	b. MASS	a. LONG TERM AVERAGE VALUE		b. NO. OF ANALYSES
				(1) CONCENTRATION	(2) MASS	(1) CONCENTRATION	(2) MASS	(1) CONCENTRATION	(2) MASS				(1) CONCENTRATION	(2) MASS	
GC/MS FRACTION – BASE/NEUTRAL COMPOUNDS (*continued*)															
22B. 1,4-Dichloro-benzene (106-46-7)			X												
23B. 3,3-Dichloro-benzidine (91-94-1)			X												
24B. Diethyl Phthalate (84-66-2)			X												
25B. Dimethyl Phthalate (131-11-3)			X												
26B. Di-N-Butyl Phthalate (84-74-2)			X												
27B. 2,4-Dinitro-toluene (121-14-2)			X												
28B. 2,6-Dinitro-toluene (606-20-2)			X												
29B. Di-N-Octyl Phthalate (117-84-0)			X												
30B. 1,2-Diphenyl-hydrazine (*as Azo-benzene*) (122-66-7)			X												
31B. Fluoranthene (206-44-0)			X												
32B. Fluorene (86-73-7)			X												
33B. Hexachloro-benzene (118-74-1)			X												
34B. Hexachloro-butadiene (87-68-3)			X												
35B. Hexachloro-cyclopentadiene (77-47-4)			X												
36B Hexachloro-ethane (67-72-1)			X												
37B. Indeno (*1,2,3-cd*) Pyrene (193-39-5)			X												
38B. Isophorone (78-59-1)			X												
39B. Naphthalene (91-20-3)			X												
40B. Nitrobenzene (98-95-3)			X												
41B. N-Nitro-sodimethylamine (62-75-9)			X												
42B. N-Nitrosodi-N-Propylamine (621-64-7)			X												

 CONTINUE ON REVERSE

EPA-R5-2014-0065572F0000475

CONTINUED FROM THE FRONT

1. POLLUTANT AND CAS NUMBER (*if available*)	2. MARK "X"			3. EFFLUENT							4. UNITS		5. INTAKE (*optional*)		
	a. TESTING REQUIRED	b. BELIEVED PRESENT	c. BELIEVED ABSENT	a. MAXIMUM DAILY VALUE		b. MAXIMUM 30 DAY VALUE (*if available*)		c. LONG TERM AVRG. VALUE (*if available*)		d. NO. OF ANALYSES	a. CONCEN-TRATION	b. MASS	a. LONG TERM AVERAGE VALUE		b. NO. OF ANALYSES
				(1) CONCENTRATION	(2) MASS	(1) CONCENTRATION	(2) MASS	(1) CONCENTRATION	(2) MASS				(1) CONCENTRATION	(2) MASS	
GC/MS FRACTION – BASE/NEUTRAL COMPOUNDS (*continued*)															
43B. N-Nitro-sodiphenylamine (86-30-6)			X												
44B. Phenanthrene (85-01-8)			X												
45B. Pyrene (129-00-0)			X												
46B. 1,2,4-Tri-chlorobenzene (120-82-1)			X												
GC/MS FRACTION – PESTICIDES															
1P. Aldrin (309-00-2)			X												
2P. α-BHC (319-84-6)			X												
3P. β-BHC (319-85-7)			X												
4P. γ-BHC (58-89-9)			X												
5P. δ-BHC (319-86-8)			X												
6P. Chlordane (57-74-9)			X												
7P. 4,4'-DDT (50-29-3)			X												
8P. 4,4'-DDE (72-55-9)			X												
9P. 4,4'-DDD (72-54-8)			X												
10P. Dieldrin (60-57-1)			X												
11P. α-Enosulfan (115-29-7)			X												
12P. β-Endosulfan (115-29-7)			X												
13P. Endosulfan Sulfate (1031-07-8)			X												
14P. Endrin (72-20-8)			X												
15P. Endrin Aldehyde (7421-93-4)			X												
16P. Heptachlor (76-44-8)			X												

 CONTINUE ON PAGE V-9

EPA-R5-2014-0006572F0000475

EPA I.D. NUMBER (*copy from Item 1 of Form 1*)	OUTFALL NUMBER
0IL00010*ED	002

CONTINUED FROM PAGE V-8

1. POLLUTANT AND CAS NUMBER (*if available*)	2. MARK "X"			3. EFFLUENT							4. UNITS		5. INTAKE (*optional*)		
	a. TESTING REQUIRED	b. BELIEVED PRESENT	c. BELIEVED ABSENT	a. MAXIMUM DAILY VALUE		b. MAXIMUM 30 DAY VALUE (*if available*)		c. LONG TERM AVRG. VALUE (*if available*)		d. NO. OF ANALYSES	a. CONCEN-TRATION	b. MASS	a. LONG TERM AVERAGE VALUE		b. NO. OF ANALYSES
				(1) CONCENTRATION	(2) MASS	(1) CONCENTRATION	(2) MASS	(1) CONCENTRATION	(2) MASS				(1) CONCENTRATION	(2) MASS	
GC/MS FRACTION – PESTICIDES (*continued*)															
17P. Heptachlor Epoxide (1024-57-3)			X												
18P. PCB-1242 (53469-21-9)			X												
19P. PCB-1254 (11097-69-1)			X												
20P. PCB-1221 (11104-28-2)			X												
21P. PCB-1232 (11141-16-5)			X												
22P. PCB-1248 (12672-29-6)			X												
23P. PCB-1260 (11096-82-5)			X												
24P. PCB-1016 (12674-11-2)			X												
25P. Toxaphene (8001-35-2)			X												

Please print or type in the unshaded areas only.

EPA ID Number (*copy from Item 1 of Form 1*)
0IL00010*ED

Form Approved. OMB No. 2040-0086
Approval expires 5-31-92

FORM 2F NPDES

U.S. Environmental Protection Agency
Washington, DC 20460

Application for Permit to Discharge Storm Water Discharges Associated with Industrial Activity

Paperwork Reduction Act Notice

Public reporting burden for this application is estimated to average 28.6 hours per application, including time for reviewing instructions, searching existing data sources, gathering and maintaining the data needed, and completing and reviewing the collection of information. Send comments regarding the burden estimate, any other aspect of this collection of information, or suggestions for improving this form, including suggestions which may increase or reduce this burden to: Chief, Information Policy Branch, PM-223, U.S. Environmental Protection Agency, 1200 Pennsylvania Avenue, NW, Washington, DC 20460, or Director, Office of Information and Regulatory Affairs, Office of Management and Budget, Washington, DC 20503.

I. Outfall Location

For each outfall, list the latitude and longitude of its location to the nearest 15 seconds and the name of the receiving water.

A. Outfall Number (*list*)	B. Latitude			C. Longitude			D. Receiving Water (*name*)
002	38	41	50	82	52	23	Unnamed Tributary to Patton Run

II. Improvements

A. Are you now required by any Federal, State, or local authority to meet any implementation schedule for the construction, upgrading or operation of wastewater treatment equipment or practices or any other environmental programs which may affect the discharges described in this application? This includes, but is not limited to, permit conditions, administrative or enforcement orders, enforcement compliance schedule letters, stipulations, court orders, and grant or loan conditions.

1. Identification of Conditions, Agreements, Etc.	2. Affected Outfalls		3. Brief Description of Project	4. Final Compliance Date	
	number	source of discharge		a. req.	b. proj.
NA	NA	NA	NA		

B: You may attach additional sheets describing any additional water pollution (or other environmental projects which may affect your discharges) you now have under way or which you plan. Indicate whether each program is now under way or planned, and indicate your actual or planned schedules for construction.

III. Site Drainage Map

Attach a site map showing topography (or indicating the outline of drainage areas served by the outfalls(s) covered in the application if a topographic map is unavailable) depicting the facility including: each of its intake and discharge structures; the drainage area of each storm water outfall; paved areas and buildings within the drainage area of each storm water outfall, each known past or present areas used for outdoor storage of disposal of significant materials, each existing structural control measure to reduce pollutants in storm water runoff, materials loading and access areas, areas where pesticides, herbicides, soil conditioners and fertilizers are applied; each of its hazardous waste treatment, storage or disposal units (including each area not required to have a RCRA permit which is used for accumulating hazardous waste under 40 CFR 262.34); each well where fluids from the facility are injected underground; springs, and other surface water bodies which received storm water discharges from the facility.

 Continue on Page 2

Continued from the Front

IV. Narrative Description of Pollutant Sources

A. For each outfall, provide an estimate of the area (include units) of impervious surfaces (including paved areas and building roofs) drained to the outfall, and an estimate of the total surface area drained by the outfall.

Outfall Number	Area of Impervious Surface *(provide units)*	Total Area Drained *(provide units)*	Outfall Number	Area of Impervious Surface *(provide units)*	Total Area Drained *(provide units)*
002	~10,000 sq ft	~3,000,000 sq ft			

B. Provide a narrative description of significant materials that are currently or in the past three years have been treated, stored or disposed in a manner to allow exposure to storm water; method of treatment, storage, or disposal; past and present materials management practices employed to minimize contact by these materials with storm water runoff; materials loading and access areas, and the location, manner, and frequency in which pesticides, herbicides, soil conditioners, and fertilizers are applied.

Coal is stockpiled at the Facility prior to transport. Runoff from the coal pile storage areas is directed to settling ponds, where coal particulate matter settles before discharge. Various petroleum products are stored in aboveground storage tanks and drums.

C. For each outfall, provide the location and a description of existing structural and nonstructural control measures to reduce pollutants in storm water runoff; and a description of the treatment the storm water receives, including the schedule and type of maintenance for control and treatment measures and the ultimate disposal of any solid or fluid wastes other than by discharge.

Outfall Number	Treatment	List Codes from Table 2F-1
002	Runoff from coal pile areas is routed to a series of settling ponds prior to discharge.	1-U; 4-A

V. Nonstormwater Discharges

A. I certify under penalty of law hat the outfall(s) covered by this application have been tested or evaluated for the presence of nonstormwater discharges, and that all nonstormwater discharged from these outfall(s) are identified in either an accompanying Form 2C or From 2E application for the outfall.

Name and Official Title *(type or print)*	Signature	Date Signed
R.P. Russell, System Director Environmental Protection	R.P. Russell	11/8/12

B. Provide a description of the method used, the date of any testing, and the onsite drainage points that were directly observed during a test.

Outfall 002 was visually inspected on 12/8/09 for any non-storm water discharges. No discharges were observed.

VI. Significant Leaks or Spills

Provide existing information regarding the history of significant leaks or spills of toxic or hazardous pollutants at the facility in the last three years, including the approximate date and location of the spill or leak, and the type and amount of material released.

NA

 Continue on Page 3

Continued from Page 2

EPA ID Number *(copy from Item 1 of Form 1)*
0IL00010*ED

VII. Discharge Information

A, B, C, & D: See instructions before proceeding. Complete one set of tables for each outfall. Annotate the outfall number in the space provided. Table VII-A, VII-B, VII-C are included on separate sheets numbers VII-1 and VII-2.

E. Potential discharges not covered by analysis – is any toxic pollutant listed in table 2F-2, 2F-3, or 2F-4, a substance or a component of a substance which you currently use or manufacture as an intermediate or final product or byproduct?

☐ Yes (*list all such pollutants below*) ☑ No (*go to Section IX*)

NA

VIII. Biological Toxicity Testing Data

Do you have any knowledge or reason to believe that any biological test for acute or chronic toxicity has been made on any of your discharges or on a receiving water in relation to your discharge within the last 3 years?

☐ Yes (*list all such pollutants below*) ☑ No (*go to Section IX*)

NA

IX. Contract Analysis Information

Were any of the analyses reported in Item VII performed by a contract laboratory or consulting firm?

☑ Yes (*list the name, address, and telephone number of, and pollutants analyzed by, each such laboratory or firm below*) ☐ No (*go to Section X*)

A. Name	B. Address	C. Area Code & Phone No.	D. Pollutants Analyzed
REIC Labs	P.O. Box 286 225 Airport Industrial Park Road Beaver, WV 25813	(304) 255-2500	All pollutants required by existing NPDES permit

X. Certification

I certify under penalty of law that this document and all attachments were prepared under my direction or supervision in accordance with a system designed to assure that qualified personnel properly gather and evaluate the information submitted. Based on my inquiry of the person or persons who manage the system or those persons directly responsible for gathering the information, the information submitted is, to the best of my knowledge and belief, true, accurate, and complete. I am aware that there are significant penalties for submitting false information, including the possibility of fine and imprisonment for knowing violations.

A. Name & Official Title (*Type Or Print*)	B. Area Code and Phone No.
R.P. Russell, System Director Environmental Protection	(404) 582-4456
C. Signature R.P. Russell	D. Date Signed 11/12/12

EPA ID Number (*copy from Item 1 of Form 1*)
0IL00010*ED

Form Approved. OMB No. 2040-0086
Approval expires 5-31-92

VII. Discharge information *(Continued from page 3 of Form 2F)*

Part A – You must provide the results of at least one analysis for every pollutant in this table. Complete one table for each outfall. See instructions for additional details.

Pollutant and CAS Number *(if available)*	Maximum Values *(include units)*		Average Values *(include units)*		Number of Storm Events Sampled	Sources of Pollutants
	Grab Sample Taken During First 20 Minutes	Flow-Weighted Composite	Grab Sample Taken During First 20 Minutes	Flow-Weighted Composite		
Oil and Grease	Waiver Requested - Pollutant not required to be analyzed by existing permit and not expected to be present.					
Biological Oxygen Demand (BOD5)	Waiver Requested - Pollutant not required to be analyzed by existing permit and not expected to be present.					
Chemical Oxygen Demand (COD)	Waiver Requested - Pollutant not required to be analyzed by existing permit and not expected to be present.					
Total Suspended Solids (TSS)	41.5 mg/L		6.95 mg/L		64	Coal Storage Pile Runoff
Total Nitrogen	Waiver Requested - Pollutant not required to be analyzed by existing permit and not expected to be present.					
Total Phosphorus	Waiver Requested - Pollutant not required to be analyzed by existing permit and not expected to be present.					
pH	Minimum 6.92	Maximum 7.59	Minimum 6.97	Maximum 7.59	64	Coal Storage Pile Runoff

Part B – List each pollutant that is limited in an effluent guideline which the facility is subject to or any pollutant listed in the facility's NPDES permit for its process wastewater (if the facility is operating under an existing NPDES permit). Complete one table for each outfall. See the instructions for additional details and requirements.

Pollutant and CAS Number *(if available)*	Maximum Values *(include units)*		Average Values *(include units)*		Number of Storm Events Sampled	Sources of Pollutants
	Grab Sample Taken During First 20 Minutes	Flow-Weighted Composite	Grab Sample Taken During First 20 Minutes	Flow-Weighted Composite		
Iron, Total	1,560 ug/L		306 ug/L		64	Coal Storage Pile Runoff
Manganese, Tot.	1,330 ug/L		339.5 ug/L		64	Coal Storage Pile Runoff
Residue,	< 0.10 ml/L/hr		<0.1ml/L/hr		64	Coal Storage Pile Runoff
Settable						

Continued from the Front

Part C - List each pollutant shown in Table 2F-2, 2F-3, and 2F-4 that you know or have reason to believe is present. See the instructions for additional details and requirements. Complete one table for each outfall.

Pollutant and CAS Number *(if available)*	Maximum Values *(include units)*		Average Values *(include units)*		Number of Storm Events Sampled	Sources of Pollutants
	Grab Sample Taken During First 20 Minutes	Flow-Weighted Composite	Grab Sample Taken During First 20 Minutes	Flow-Weighted Composite		
Iron, Total	1,560 ug/L		306 ug/L		64	Coal Storage Pile Runoff
Manganese,	1.330 ug/L		339.5 ug/L		64	Coal Storage Pile Runoff
Total						

Part D – Provide data for the storm event(s) which resulted in the maximum values for the flow weighted composite sample.

1. Date of Storm Event	2. Duration of Storm Event *(in minutes)*	3. Total rainfall during storm event *(in inches)*	4. Number of hours between beginning of storm measured and end of previous measurable rain event	5. Maximum flow rate during rain event *(gallons/minute or specify units)*	6. Total flow from rain event *(gallons or specify units)*
NA	NA	NA	NA	NA	NA

7. Provide a description of the method of flow measurement or estimate.

NA

State of Ohio Environmental Protection Agency

DIVISION OF SURFACE WATER

Antidegradation Addendum

In accordance with Ohio Administrative Code 3745-1-05 (Antidegradation), additional information may be required to complete your application for a permit to install or NPDES permit. For any application that may result in an increase in the level of pollutants being discharged (NPDES and/or PTI)or for which there might be activity taking place within a stream bed, the processing of the permit(s) may be required to go through procedures as outlined in the antidegradation rule. The rule outlines procedures for public notification and participation as well as procedures pertaining to the levels of review necessary. The levels of review necessary depend on the degradation being considered/requested. The rule also outlines exclusions from portions of the application and review requirements and waivers that the Director may grant as specified in Section 3745-1-05(D) of the rule. Please complete the following questions. The answers provided will allow the Ohio EPA to determine if additional information is needed. **All projects that require both an NPDES and PTI should submit both applications simultaneously to avoid going through the antidegradation process separately for each permit**.

A. **Applicant:** Norfolk Southern Railway Company

Facility Owner: Norfolk Southern Railway Company

Facility Location (city and county): Wheelersburg, Scioto County

Application or Plans Prepared By: Cardno MM&A

Project Name: Wheelersburg Terminal NPDES Permit Renewal

NPDES Permit Number (if applicable): 0IT00010*ED

B. **Antidegradation Applicability**

Is the application for? (check as many as apply):

_____ Application with no direct surface water discharge (Projects that do not meet the applicability section of 3745-1-05(B)1, i.e., on-site disposal, extensions of sanitary sewers, spray irrigation, indirect discharger to POTW, etc.). (Complete Section E)

X Renewal NPDES application or PTI application with no requested increase in loading of currently permitted pollutants. (Complete Section E, Do not complete Sections C or D).

_____ PTI and NPDES application for a new wastewater treatment works that will discharge to a surface water. (Complete Sections C and E)

_____ An expansion/modification of an existing wastewater treatment works discharging to a surface water that will result in any of the following (PTI and NPDES):(Complete Sections C and E)

- addition of any pollutant not currently in the discharge, or
- an increase in mass or concentration of any pollutant currently in the discharge, or
- an increase in any current pollutant limitation in terms of mass or concentration.

Click to clear all entered information (on all 4 pages of this form) CLEAR

_____ PTI that involves placement of fill or installation of any portion of a sewerage system (i.e., sanitary sewers, pump stations, WWTP, etc.) within 150 feet of a stream bed. Please provide information requested on the stream evaluation addendum (i.e., number of stream crossings, fill placement, etc.) and complete Section E.

_____ Initial NPDES permit for an existing treatment works with a wastewater discharge prior to October 1, 1996. (Complete Sections D and E)

_____ Renewal NPDES permit or modification to an effective NPDES permit that will result in any of the following: (Complete Sections C and E)

- a new permit limitation for a pollutant that previously had no limitation, or
- an increase in any mass or concentration limitation of any pollutant that currently has a limitation.

C. Antidegradation Information

1. Does the PTI and/or NPDES permit application meet an exclusion as outlined by OAC 3745-1-05(D)(1) of the Antidegradation rule?

   _____ Yes (Complete Question C.2)

   _____ No (Complete Questions C.3 and C.4)

2. For projects that would be eligible for exclusions provide the following information:

   a. Provide justification for the exclusion.

   b. Identify the substances to be discharged, including the amount of regulated pollutants to be discharged in terms of mass and concentration.

   c. A description of any construction work, fill or other structures to occur or be placed in or near a stream bed.

3. Are you requesting a waiver as outlined by OAC 3745-1-05(D)(2-7) of the Antidegradation rule?

   _____ No

   _____ Yes

   If you wish to pursue one of the waivers, please identify the waiver and submit the necessary information to support the request. Depending on the waiver requested, the information required under question C.4 may be required to complete the application.

4. For all projects that do **not** qualify for an exclusion a report must accompany this application evaluating the preferred design alternative, non-degradation alternatives, minimal degradation alternatives, and mitigative techniques/measures for the design and operation of the activity. The information outlined below should be addressed in this report. If a waiver is requested, this section is still required.

   a. Describe the availability, cost effectiveness and technical feasibility of connecting to existing central or regional sewage collection and treatment facilities, including long range plans for

EPA-R5-2014-006572F0000475

sewer service outlined in state or local water quality management planning documents and applicable facility planning documents.

b. List and describe all government and/or privately sponsored conservation projects that may have been or will be specifically targeted to improve water quality or enhance recreational opportunities on the affected water resource.

c. Provide a brief description below of all treatment/disposal alternatives evaluated for this application and their respective operational and maintenance needs. (If additional space is needed please attach additional sheets to the end of this addendum).

Preferred design alternative:

Non-degradation alternative(s):

Minimal degradation alternative(s):

Mitigative technique/measure(s):

At a minimum, the following information must be included in the report for each alternative evaluated.

d. Outline of the treatment/disposal system evaluated, including the costs associated with the equipment, installation, and continued operation and maintenance.

e. Identify the substances to be discharged, including the amount of regulated pollutants to be discharged in terms of mass and concentration.

f. Describe the reliability of the treatment/disposal system, including but not limited to the possibility of recurring operation and maintenance difficulties that would lead to increased degradation.

g. Describe any impacts to human health and the overall quality and value of the water resource.

h. Describe and provide an estimate of the important social and economic benefits to be realized through this proposed project. Include the number and types of jobs created and tax revenues generated.

i. Describe environmental benefits to be realized through this proposed project.

j. Describe and provide an estimate of the social and economic benefits that may be lost as a result of this project. Include the impacts on commercial and recreational use of the water resource.

k. Describe the environmental benefits lost as a result of this project. Include the impact on the aquatic life, wildlife, threatened or endangered species.

l. A description of any construction work, fill or other structures to occur or be placed in or near a stream bed.

m. Provide any other information that may be useful in evaluating this application.

D. Discharge Information

1. For treatment/disposal systems constructed pursuant to a previously issued Ohio EPA PTI, provide the following information:

PTI Number _____
PTI Issuance Date _____
Initial Date of Discharge _____

2. Has the appropriate NPDES permit application form been submitted including representative effluent data?

_____ Yes (go to E)

_____ No (see below)

If no, submit the information as applicable under **a OR b** as follows:

a. For entities discharging process wastewater attach a completed 2C form.

b. For entities discharging wastewater of domestic origin attach the results of at least one chemical analysis of the wastestream for all pollutants for which authorization to discharge is being requested and a measurement of the daily volume (gallons per day) of wastewaters being discharged.

E. Based on my inquiry of the person or persons who manage the system or those persons directly responsible for gathering the information, the information is, to the best of my knowledge and belief, true, accurate and complete.

This section must be signed by the same responsible person who signed the accompanying permit application or certification as per 40 CFR 122.22.

Signature R.P. Russell

Date 11/8/12

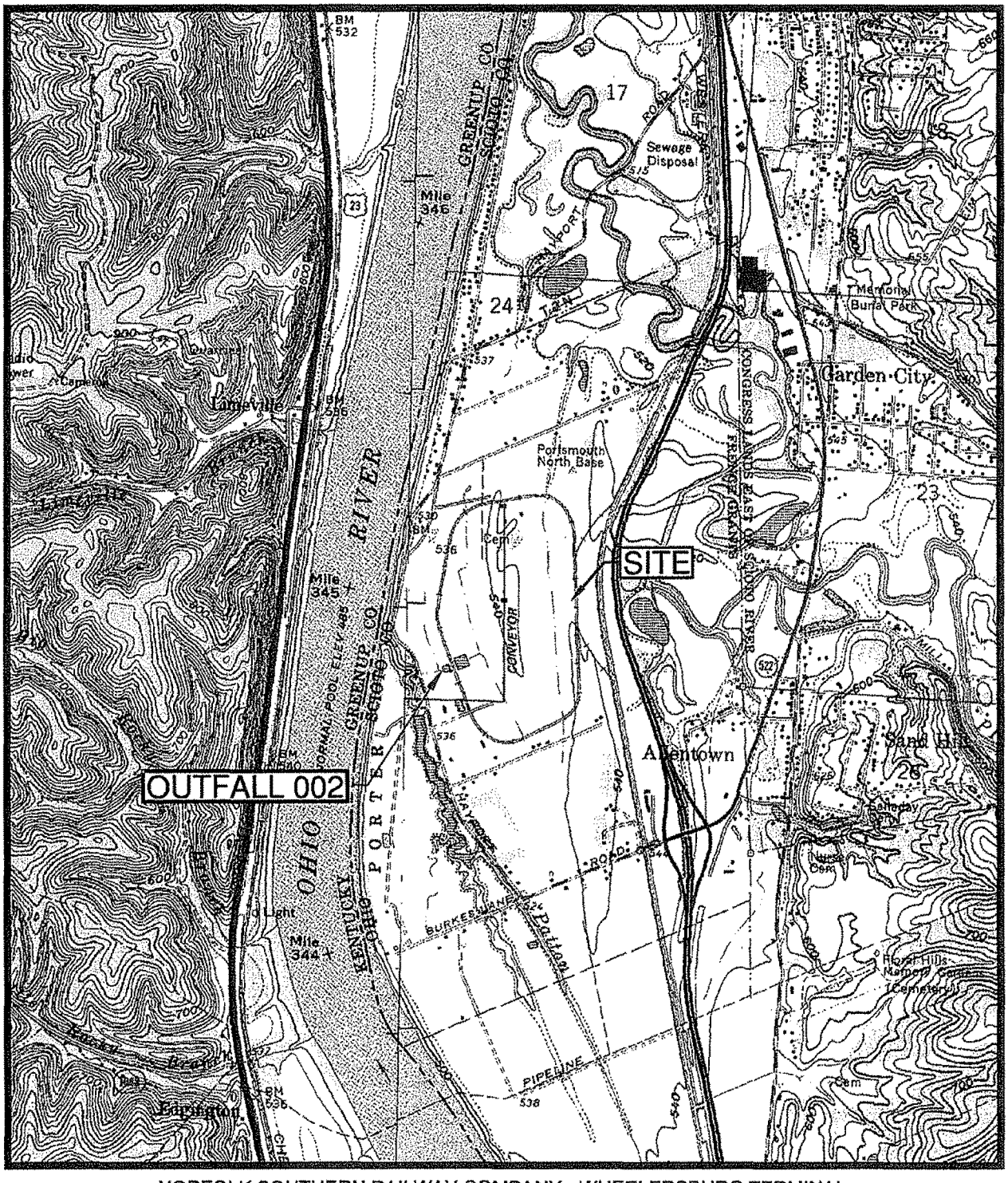

NORFOLK SOUTHERN RAILWAY COMPANY - WHEELERSBURG TERMINAL

WESTERN CENTRAL PORTION OF USGS 7.5' WHEELERSBURG, OH. QUADRANGLE
EASTERN CENTRAL PORTION OF USGS 7.5' PORTSMOUTH, KY. QUADRANGLE

2,000' 0 2,000'

SCALE 1:24,000

Cardno MM&A

NS

TOPOGRAPHIC SITE LOCATION MAP

MAP 1

OHIO
QUADRANGLE LOCATION

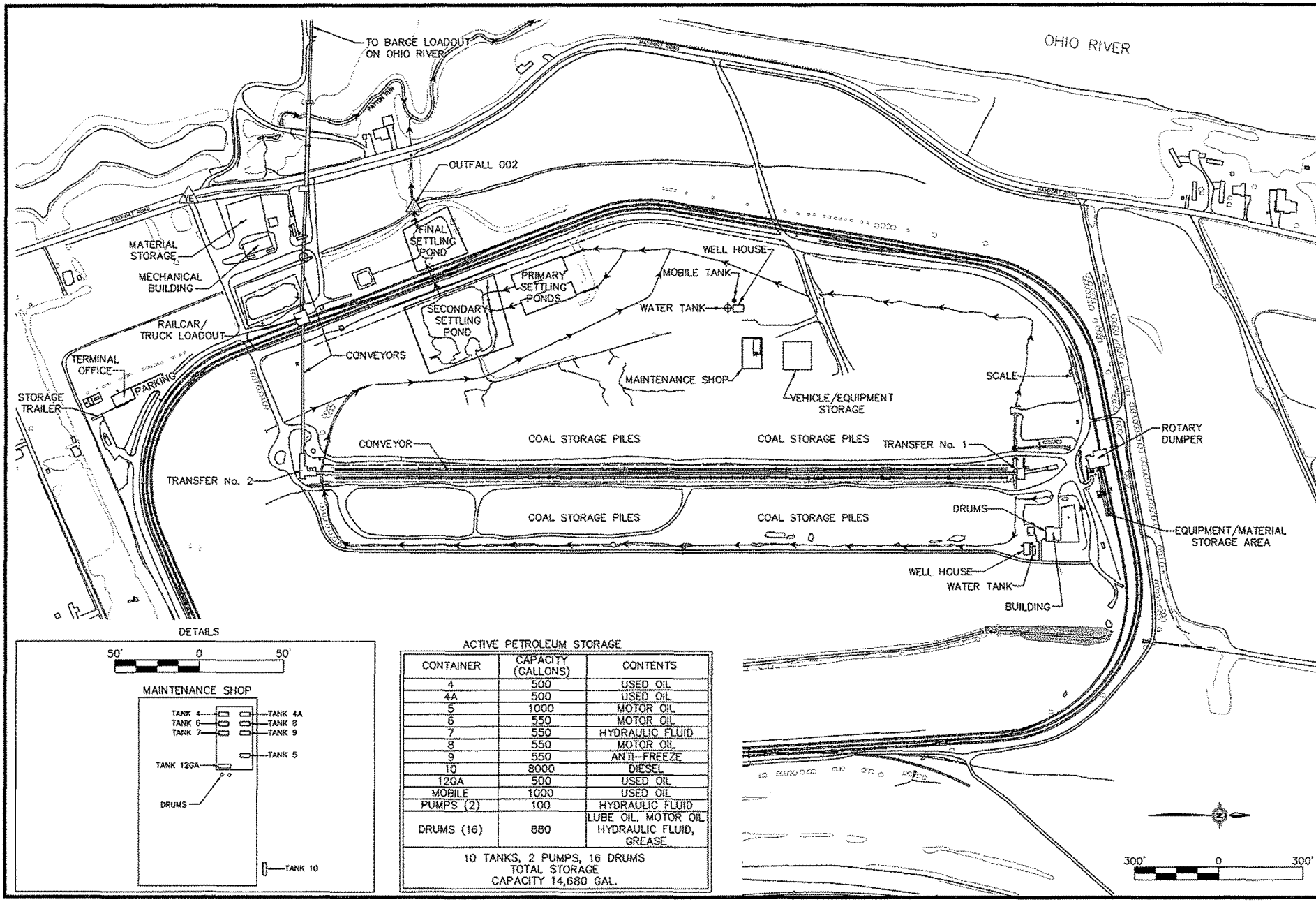

DETAILS

ACTIVE PETROLEUM STORAGE

CONTAINER	CAPACITY (GALLONS)	CONTENTS
4	500	USED OIL
4A	500	USED OIL
5	1000	MOTOR OIL
6	550	MOTOR OIL
7	550	HYDRAULIC FLUID
8	550	MOTOR OIL
9	550	ANTI-FREEZE
10	8000	DIESEL
12GA	500	USED OIL
MOBILE	1000	USED OIL
PUMPS (2)	100	HYDRAULIC FLUID
DRUMS (16)	880	LUBE OIL, MOTOR OIL HYDRAULIC FLUID, GREASE
10 TANKS, 2 PUMPS, 16 DRUMS TOTAL STORAGE CAPACITY 14,680 GAL.		

Cardno MM&A

No.	Date	Revision

DESIGNED: DJD
DRAWN: DJD
CHECKED: MN
DATE: NOVEMBER 2012
SCALE: 1" = 300'
PROJECT NO.: R5771G/1
FILE NO.: SWPPP_SPCC

NORFOLK SOUTHERN RAILWAY COMPANY
WHEELERSBURG TERMINAL
WHEELERSBURG, OHIO

FACILITY LAYOUT AND DRAINAGE MAP

MAP 2

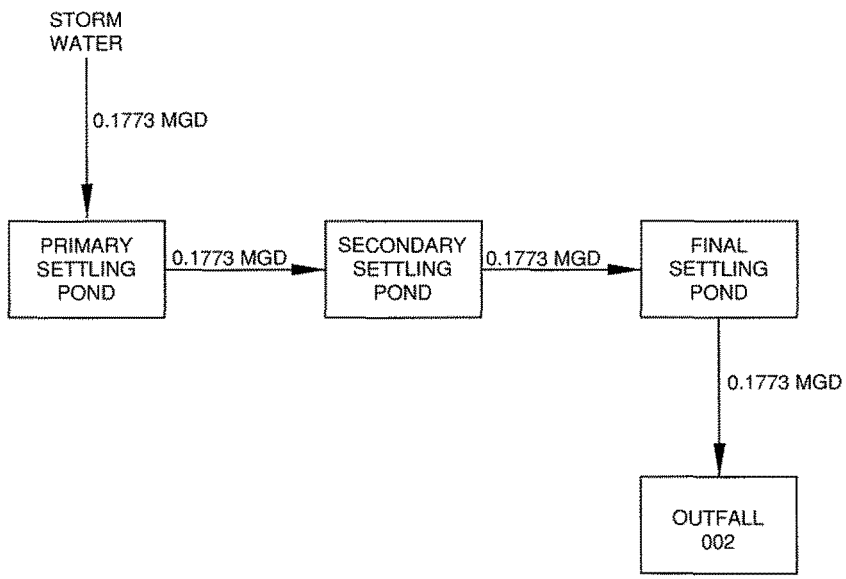

FLOW SCEMATIC

FIGURE 3

NORFOLK SOUTHERN RAILWAY COMPANY
WHEELERSBURG, TERMINAL
WHEELERSBURG, OHIO

DATE:	NOV. 2012
SCALE:	NTS
DESIGNED:	MN
DRAWN:	DJD

Cardno MM&A

NORFOLK SOUTHERN

EPA-R5-2014-006572F0000475