McGuireWoods LLP
77 West Wacker Drive
Suite 4100
Chicago, IL 60601-1815
Phone: 312.849.8100
Fax: 312.849.3690
www.mcguirewoods.com

James T. Harrington
Direct: 312/849.8252

McGUIREWOODS

RECEIVED
MAY 30 2006
AIR ENFORCEMENT BRANCH,
U.S. EPA, REGION 5

jharrington@mcguirewoods.com
Direct Fax: 312/920.6177

May 26, 2006

Christine Liszewski, Esq.
U.S. Environmental Protection Agency
77 West Jackson Boulevard (C-14J)
Chicago IL 60604

Jonathan Haile, Esq.
Assistant United States Attorney
United States Attorney's Office
219 South Dearborn Street
Chicago, IL 60604

Julie Armitage, Acting Manager
Illinois Environmental Protection Agency
Bureau of Air, Compliance Unit #40
1021 North Grand Avenue East
Springfield, IL 62702

Kevin Mattison
Illinois Environmental Protection Agency
Bureau of Air
9511 West Harrison Street
Des Plaines, IL 60016

Harrish Narayen
Illinois Environmental Protection Agency
Bureau of Air
9511 West Harrison Street
Des Plaines, IL 60016

Chief, Environmental Enforcement Section
Environment and Natural Resources Division
U.S. Department of Justice
Box 7611 Ben Franklin Station
Washington, D.C. 20044-7611
Re: DOJ No. 90-5-2-1-08203

Regional Counsel
U.S. Environmental Protection Agency
Region 5
77 West Jackson Boulevard (C-14J)
Chicago, IL 60604

Chief, Air Enforcement and Compliance
Assurance Branch
U.S. Environmental Protection Agency
Region 5
77 West Jackson Boulevard (AE-17J)
Chicago, IL 60604

Re: USEPA NOV/FOV No. EPA-5-03-IL-02
USA v. A. Finkl & Sons Co. (Unfiled)
Draft Consent Decree - Test Protocol

Ladies and Gentlemen:

Pursuant to the above-captioned NOV/FOV, A. Finkl & Sons Co. ("Finkl") has negotiated a draft Consent Decree with the United States of America requiring it to comply with New Source Performance Standards ("NSPS") for electric arc furnaces for which construction or modification is commenced after August 17, 1983 at 40 C.F.R. Part 60, Subpart AAa, §§ 60.270a-276a. Pursuant to Paragraph 21 of the draft Consent Decree, it is required to conduct a performance test to determine compliance with said New Source Performance Standards. Because of the design of two of the baghouses at its Chicago facility, a modified protocol for this performance test is required. It is presently contemplated that this protocol is to be incorporated into the final Consent Decree. A draft of this protocol has already been submitted to USEPA for its review. Pursuant to USEPA's direction, we are hereby enclosing the final protocol prepared by Clean Air Engineering for your review and

approval. We will be happy to discuss this protocol and address any questions you may have. Your prompt attention to this matter would be greatly appreciated. Thank you for your attention.

Sincerely,

James T. Harrington

JTH:drm
Enclosure

Cc: B. Liimatainen (w/o encls.)
J. Curci (w/o encls.)
J. Guliana (w/encls.)
R. Rappaport (w/o encls.)
F. Krikau (w/o encls.)

#4005667 (v.1).doc

CleanAir

CleanAir Engineering
500 W. Wood Street
Palatine, IL 60067-4975
800-627-0033
www.cleanair.com

A. Finkl & Sons Co.
2011 N. Southport Ave.
Chicago, IL 60614

PROTOCOL FOR PARTICULATE TESTING

Prepared for:
A. FINKL & SONS CO.
BAGHOUSE OUTLETS
CHICAGO, IL

Client Reference No:
CleanAir Project No: 9939
Revision 0: May 18, 2006

Submitted by,

Mark Roach, P.E.
Project Manager

Reviewed by,

Peter Kaufmann
Manager, Midwest Source Group

REVISION HISTORY

PROTOCOL FOR PARTICULATE TESTING

Revision History

Revision No:	Date	Pages	Comments
0	05/18/06	All	Original version of document.

CONTENTS

1 PROJECT OVERVIEW 1-1
DISCUSSION OF TEST PROGRAM 1-1
Table 1-1: Proposed Schedule of Activities 1-2

2 RESULTS 2-1
Table 2-1: E/N Baghouse Outlet, Particulate Results 2-1

3 DESCRIPTION OF INSTALLATION 3-1
PROCESS DESCRIPTION 3-1
DESCRIPTION OF SAMPLING LOCATION(S) 3-1
Table 3-1: Sampling Points 3-1
Figure 3-1: E/N and W Baghouse Outlet Sampling Point Determination (EPA Method 1) 3-2
Figure 3-2: E/N and W Baghouse Inlet 3-3
Traverse Point Determination (EPA Method 1) 3-3
Figure 3-3: E/S Baghouse Sampling Point Determination (EPA Method 1) 3-4

4 METHODOLOGY 4-1
Table 4-1: Summary of Sampling Procedures 4-1

5 APPENDIX 5-1
TEST METHOD SPECIFICATIONS ..... A
SAMPLE CALCULATIONS ..... B
SAMPLE DATA FIELD SHEETS C

PROJECT OVERVIEW

A. Finkl & Sons Co. (Finkl) contracted Clean Air Engineering (CleanAir) to perform particulate testing at their facility located in Chicago, IL for compliance purposes.

The test parameters included the following pollutants:

- total suspended particulate (TSP)
- opacity

The testing is tentatively scheduled to take place at the outlets of the three baghouses during the week of June 26, 2006. Coordinating the field testing will be:

John Guliana	Mark Roach, P.E.
A. Finkl & Sons Co.	Clean Air Engineering
2011 N. Southport Ave.	500 W. Wood St.
Chicago, IL 60614-4079	Palatine, IL 60067-4929
johng@finkl.com	mroach@cleanair.com

The facility is covered under 40 CFR 60.subpart AAa – Standard of Performance for Steel Plants: Electric Arc Furnaces and Argon-Oxygen Decarburization Vessels Constructed After August 17, 1983. The standard for particulate matter exiting from a control device is restricted to 0.0052 grains/dscf or less.

Table 1-1 outlines the tentative test schedule for the test program. Two of the baghouses are positive pressure style and are identical in design. The third baghouse is the typical negative pressure design. The two positive pressure baghouses are designated East/North (E/N) and West (W), respectively. The negative pressure design baghouse is designated East/South (E/S).

DISCUSSION OF TEST PROGRAM

The facility can operate any combination of baghouses. Two baghouses typically run during operations. Two sampling scenarios are proposed for this program. The first scenario is to operate and test the two positive pressure baghouses simultaneously. The second scenario is to operate and sample one of the positive pressure baghouse and a negative pressure baghouse simultaneously.

The facility begins operating the two electric arc furnaces around 18:00. The furnaces are alternative charged during the overnight hours when electrical demand is low. Operations typically conclude at 10:30 the next morning. Subpart AAa requires a 4 hour particulate run time. The extended run times allow measurement of particulate during the complete heat cycle. Therefore, sampling will take place during the overnight hours. The required opacity reading can only be performed during the morning hours when daylight is available. Opacity readings will be performed by Finkl's certified opacity readers.

PROJECT OVERVIEW

Table 1-1:
Proposed Schedule of Activities

Day	Activity	Location	Test Method	Replicates	Sample Time
1	Mobilization Set-up on Baghouse "E/N" and Baghouse "W"				
2	Baghouse "E/N" Particulate Matter Flow[1]	 Outlet(s) Inlet	 4, 5D 2	 2 2	 240 min.
	Baghouse "W" Particulate Matter Flow[1]	 Outlet(s) Inlet	 4, 5D 2	 2 2	 240 min.
3	Baghouse "E/N" Particulate Matter Flow[1]	 Outlet(s) Inlet	 4, 5D 2	 1 1	 240 min.
	Baghouse "W" Particulate Matter Flow[1]	 Outlet(s) Inlet	 4, 5D 2	 1 1	 240 min.
	Set up on "E/S" Baghouse				
4	Baghouse "E/N" Particulate Matter Flow[1]	 Outlet(s) Inlet	 4, 5D 2	 2 2	 240 min.
	Baghouse "E/S" Particulate Matter	 Outlet(s)	 1-5	 2	 240 min.
5	Baghouse "E/N" Particulate Matter Flow[1]	 Outlet(s) Inlet	 4, 5D 2	 1 1	 240 min.
	Baghouse "E/S" Particulate Matter	 Outlet(s)	 1-5	 1	 240 min.
	Demobilization				

[1]. Flow measurements will be made along the inlet duct to the positive pressure baghouses. Flow measurement for the negative pressure baghouse will be made at the outlet.

PROJECT OVERVIEW

The negative pressure baghouse will be sampled in accordance with EPA Method 5. The two positive pressure baghouses will be sampled in accordance with EPA Method 5D.

Both positive pressure baghouses, E/N and W, have 10 compartments each. The compartments are configured in two rows with each row consisting of five compartments. Due to physical constraints there is access to only one row of 5 compartments for both baghouses. The obstructions block access to the compartments for sampling equipment.

The requirements of Method 5D are addressed as follows:

1. "All compartments must be sampled during the test."
   - All five compartments without obstruction will be sampled during the test.
2. "The same number of compartments must be sampled during each run."
   - Two compartments will be sampled during each run
3. "Minimum number of sample points per run: 24."
   - Each compartment will have 3 sample ports.
   - Four points will be sampled per port for a total of 24 points per run.
4. "Minimum number of sample points per test: 72."
   - Twenty four sample points will be sampled per run.
   - Over the test, 3 sample runs at total of 72 points will be sampled.
5. "Minimum number of sample points per compartment: 8."
   - Each compartment will have 12 sample points.

The velocities of exhaust gases from the two positive pressure baghouses are too low to measure accurately with the type s pitot tube. Flow measurements will be taken along the inlet duct to the positive pressure baghouses. The measured inlet velocity will be used in calculating the flow at each point and through each compartment. Flow measurement for the negative pressure baghouse will be made at the outlet.

A presentation of the proposed test results tables is provided in the Section 2.

RESULTS

Table 2-1:
E/N Baghouse Outlet, Particulate Results

Run No.	1	2	3	Average
Date (2006)				
Start Time (approx.)				
Stop Time (approx.)				
Gas Conditions				
O_2 Oxygen (dry volume %)				
CO_2 Carbon dioxide (dry volume %)				
T_s Sample temperature (°F)				
B_w Actual water vapor in gas (% by volume)				
Gas Flow Rate				
Q_a Volumetric flow rate, actual (acfm)				
Q_s Volumetric flow rate, standard (scfm)				
Q_{std} Volumetric flow rate, dry standard (dscfm)				
Sampling Data				
V_{mstd} Volume metered, standard (dscf)				
Laboratory Data				
m_n Net matter collected (g)				
Particulate Results				
C_{sd} Particulate Concentration (lb/dscf)				
C_a Particulate Concentration (lb/acf)				
C_{sd} Particulate Concentration (gr/dscf)				
$E_{lb/hr}$ Particulate Rate (lb/hr)				

DESCRIPTION OF INSTALLATION

PROCESS DESCRIPTION

Finkl manufactures forging die steel, plastic mold steels, die casting steels & custom open-die forgings. The facility operates two 90 ton electric arc furnaces. The furnaces are covered with a canopy hood that collects emissions during the process. The hoods then directs the flue gas though a combination of baghouses. The emissions from the ingot surface preparation and cleaning of steel forging processes are vented to the baghouses, also.

The testing will be performed at the following locations:

- East/North Baghouse – Inlet
- East/North Baghouse – Outlet
- West Baghouse – Inlet
- West Baghouse Outlet
- East/South Baghouse – Outlet

DESCRIPTION OF SAMPLING LOCATION(S)

Sampling point locations will determined according to EPA Method 1.

The facility is in the process of installing the sampling ports. Table 3-1 outlines the planned sampling point configurations. Any variation or field changes to the planned configuration will be documented and provided in the final report. Figure 3-1 through 3-3 illustrate(s) the proposed sampling points and orientation of sampling ports for each of the sources tested in the program.

Table 3-1:
Sampling Points

Location	Constituent	Method	Run No.	Ports	Points per Port	Minutes per Point	Total Minutes	Figure
BH E/N Inlet	Flow	2	1-3	2	12	NA	NA	3-1
BH E/N Outlet[1]	Particulate	5D	1-3	6	4	10	240	3-2
BH W Inlet	Flow	2	1-3	2	12	NA	NA	3-1
BH W Outlet[1]	Particulate	5D	1-3	6	4	10	240	3-2
BH E/S Outlet	Particulate	1-5	1-3	2	12	10	240	3-3

[1] The two outlet comparments will be sampled per run on the E/N and W baghouses Each comparment will have 3 sample ports. Four points will be sampled per port.

DESCRIPTION OF INSTALLATION

DESCRIPTION OF SAMPLING LOCATION (CONTINUED)

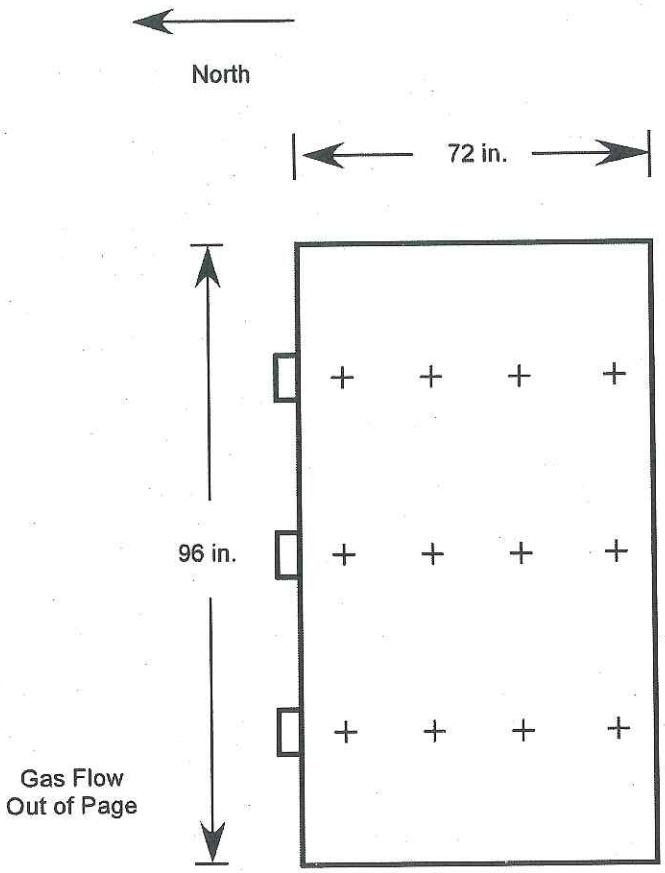

+ Indicates sampling point

Sampling Point	Port to Point Distance (in.)
1	84
2	60
3	36
4	12

Equivalent Duct diameters upstream from flow disturbance (A):	NA	Limit: 0.5
Equivalent Duct diameters downstream from flow disturbance (B):	NA	Limit: 2.0

Figure 3-1: E/N and W Baghouse Outlet Sampling Point Determination (EPA Method 1)

DESCRIPTION OF INSTALLATION

DESCRIPTION OF SAMPLING LOCATION (CONTINUED)

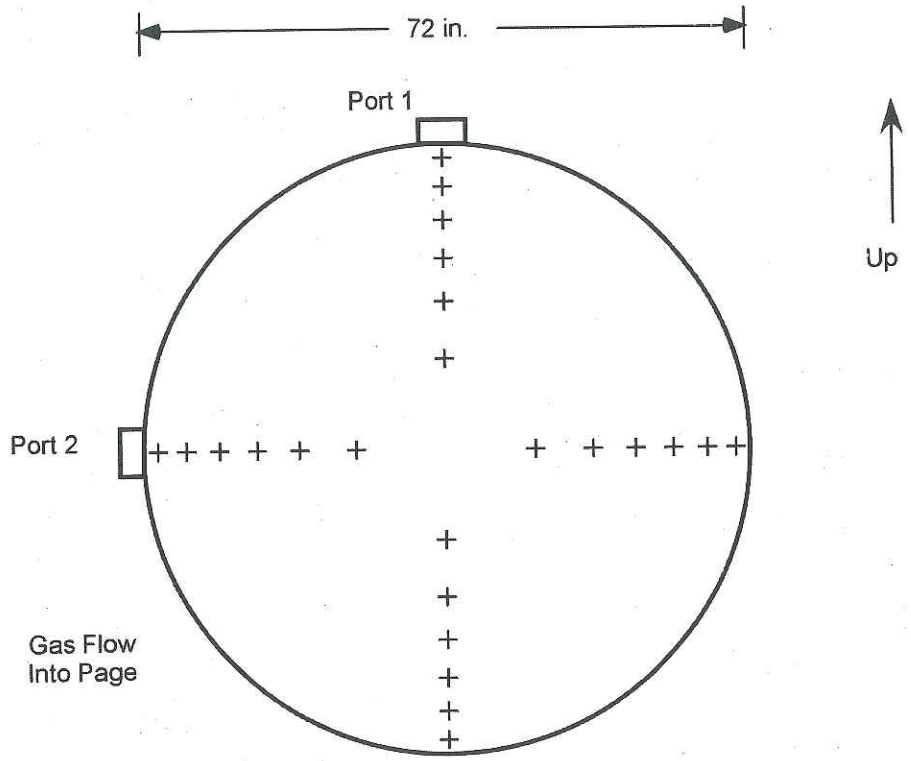

Traverse Point	Port to Point Distance (in.)
1	70.5
2	67.2
3	63.5
4	59.2
5	54
6	46.4
7	25.6
8	18.0
9	12.8
10	8.5
11	4.8
12	1.5

Duct diameters upstream from flow disturbance (A): TBD[1] Limit: 0.5
Duct diameters downstream from flow disturbance (B): TBD[1] Limit: 2.0

[1] Sampling ports have yet to be installed. Maximum number of traverse points assumed.

Figure 3-2: E/N and W Baghouse Inlet Traverse Point Determination (EPA Method 1)

DESCRIPTION OF INSTALLATION

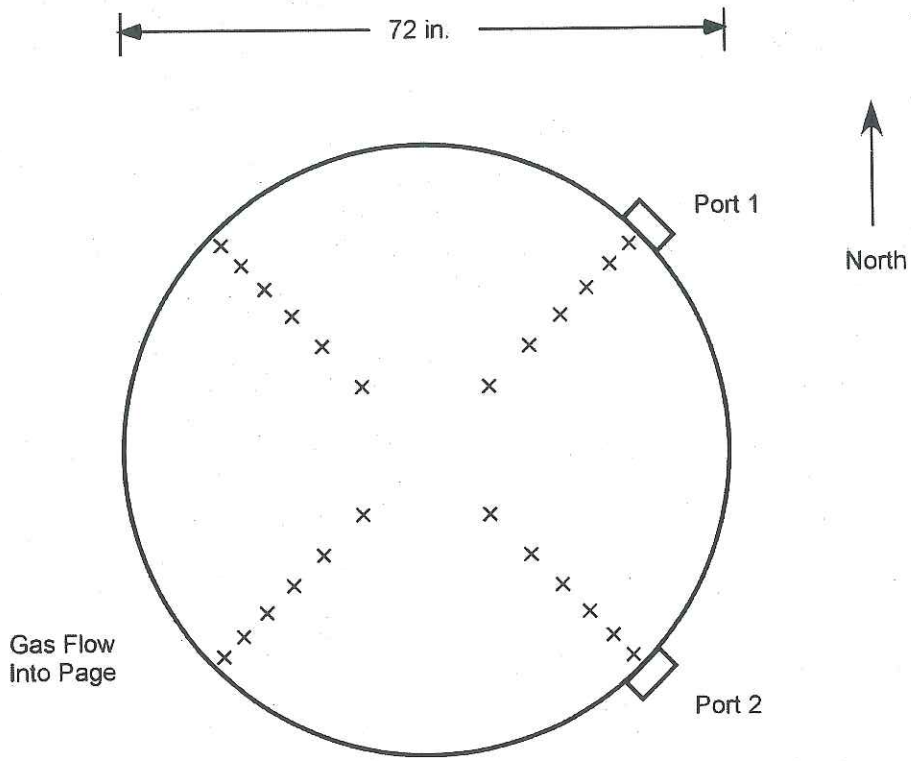

Sampling Point	Port to Point Distance (in.)
1	70.5
2	67.2
3	63.5
4	59.2
5	54
6	46.4
7	25.6
8	18.0
9	12.8
10	8.5
11	4.8
12	1.5

Duct diameters upstream from flow disturbance (A):	TBD[1]	Limit: 0.5
Duct diameters downstream from flow disturbance (B):	TBD[1]	Limit: 2.0

[1] Sampling ports have yet to be installed. Maximum number of sample points assumed.

Figure 3-3: E/S Baghouse Sampling Point Determination (EPA Method 1)

METHODOLOGY

Clean Air Engineering will follow procedures as detailed in U.S. Environmental Protection Agency (EPA) Methods 1, 2, 3, 4, 5 and 5D. The following table summarizes the methods and their respective sources.

Table 4-1:
Summary of Sampling Procedures

Title 40 CFR Part 60 Appendix A	
Method 1	"Sample and Velocity Traverses for Stationary Sources"
Method 2	"Determination of Stack Gas Velocity and Volumetric Flow Rate (Type S Pitot Tube)"
Method 3	"Gas Analysis for the Determination of Dry Molecular Weight"
Method 4	"Determination of Moisture Content in Stack Gases"
Method 5	"Determination of Particulate Matter Emissions from Stationary Sources"
Method 5D	"Determination of Particulate Matter Emissions from Positive Pressure Fabric Filters"

These methods appear in detail in Title 40 of the Code of Federal Regulations (CFR) and on the World Wide Web at http://www.cleanair.com.

Diagrams of the sampling apparatus and major specifications of the sampling, recovery and analytical procedures are summarized for each method in Appendix A.

Clean Air Engineering will follow specific quality assurance and quality control (QA/QC) procedures as outlined in the individual methods and in USEPA "Quality Assurance Handbook for Air Pollution Measurement Systems: Volume III Stationary Source-Specific Methods", EPA/600/R-94/038C. Additional QA/QC methods as prescribed in Clean Air's internal Quality Manual will also be followed. Results of all QA/QC activities performed by Clean Air Engineering are summarized in the test report.

APPENDIX

TEST METHOD SPECIFICATIONS ..... A
SAMPLE CALCULATIONS ..... B
SAMPLE DATA FIELD SHEETS C

TEST METHOD SPECIFICATIONS

A

Specification Sheet for EPA Method 5

Source Location Name(s)	E/S Baghouse Outlet
Pollutant(s) to be Determined	Particulate Matter (PM)
Other Parameters to be Determined from Train	Gas Density, Moisture, Flow Rate

	Standard Method Specification	Actual Specification Used
Pollutant Sampling Information		
Duration of Run	N/A	240 minutes
No. of Sample Traverse Points	N/A	24
Sample Time per Point	N/A	10 minutes
Sampling Rate	Isokinetic (90-110%)	Isokinetic (90-110%)
Sampling Probe		
Nozzle Material	Stainless Steel or Glass	Borosilicate Glass
Nozzle Design	Button-Hook or Elbow	Button-Hook
Probe Liner Material	Borosilicate or Quartz Glass	Borosilicate Glass
Effective Probe Length	N/A	24 in
Probe Temperature Set-Point	248˚F±25˚F	248˚F±25˚F
Velocity Measuring Equipment		
Pitot Tube Design	Type S	Type S
Pitot Tube Coefficient	N/A	0.84
Pitot Tube Calibration by	Geometric or Wind Tunnel	Geometric
Pitot Tube Attachment	Attached to Probe	Attached to Probe
Metering System Console		
Meter Type	Dry Gas Meter	Dry Gas Meter
Meter Accuracy	±2%	±1%
Meter Resolution	N/A	0.01 cubic feet
Meter Size	N/A	0.1 dcf/revolution
Meter Calibrated Against	Wet Test Meter or Standard DGM	Wet Test Meter
Pump Type	N/A	Rotary Vane
Temperature Measurements	N/A	Type K Thermocouple/Pyrometer
Temperature Resolution	5.4˚F	1.0˚F
ΔP Differential Pressure Gauge	Inclined Manometer or Equivalent	Inclined Manometer
ΔH Differential Pressure Gauge	Inclined Manometer or Equivalent	Inclined Manometer
Barometer	Mercury or Aneroid	Digital Barometer calibrated w/Mercury Aneroid
Filter Description		
Filter Location	After Probe	Exit of Probe
Filter Holder Material	Borosilicate Glass	Borosilicate Glass
Filter Support Material	Glass Frit	Teflon
Cyclone Material	N/A	None
Filter Heater Set-Point	248˚F±25˚F	248˚F±25˚F
Filter Material	Glass Fiber	Glass Fiber
Other Components		
Description	N/A	N/A
Location	N/A	N/A
Operating Temperature	N/A	N/A

Specification Sheet for EPA Method 5

	Standard Method Specification	Actual Specification Used
Impinger Train Description		
Type of Glassware Connections	Ground Glass or Equivalent	Screw Joint with Silicone Gasket
Connection to Probe or Filter by	Direct Glass Connection	Direct Glass Connection
Number of Impingers	4	4
Impinger Stem Types		
Impinger 1	Modified Greenburg-Smith	Modified Greenburg-Smith
Impinger 2	Greenburg-Smith	Greenburg-Smith
Impinger 3	Modified Greenburg-Smith	Modified Greenburg-Smith
Impinger 4	Modified Greenburg-Smith	Modified Greenburg-Smith
Impinger 5		
Impinger 6		
Impinger 7		
Impinger 8		
Gas Density Determination		
Sample Collection	Multi-point integrated	Multi-Point Integrated
Sample Collection Medium	Flexible Gas Bag	Vinyl Bag
Sample Analysis	Orsat or Fyrite Analyzer	Orsat
Sample Recovery Information		
Probe Brush Material	Nylon Bristle	Nylon Bristle
Probe Rinse Reagent	Acetone	Acetone
Probe Rinse Wash Bottle Material	Glass or Polyethylene	Teflon
Probe Rinse Storage Container	Glass or Polyethylene	Glass
Filter Recovered?	Yes	Yes
Filter Storage Container	N/A	Polystyrene
Impinger Contents Recovered?	Provision	N/A
Impinger Rinse Reagent	Deionized Distilled Water	N/A
Impinger Wash Bottle	Glass or Polyethylene	N/A
Impinger Storage Container	Glass or Polyethylene	N/A
Analytical Information		
Method 4 H_2O Determination by	Volumetric or Gravimetric	Gravimetric and Volumetric
Filter Preparation Conditions	Dessicate 24 hours minimum at ambient temperature	Dessicate 24 hours minimum at ambient temperature
Front-Half Rinse Preparation	Evaporate at ambient temperature and pressure	Evaporate at ambient temperature and pressure
Back-Half Analysis	N/A	N/A
Additional Analysis	N/A	None

Specification Sheet for EPA Method 5D

Source Location Name(s)	E/N & W Baghouse Outlet
Pollutant(s) to be Determined	Particulate Matter (PM)
Other Parameters to be Determined from Train	Gas Density, Moisture

	Standard Method Specification	Actual Specification Used
Pollutant Sampling Information		
Duration of Run	N/A	240 minutes
No. of Sample Traverse Points	N/A	24
Sample Time per Point	N/A	10 minutes
Sampling Rate	Isokinetic (90-110%)	Isokinetic (90-110%)
Sampling Probe		
Nozzle Material	Stainless Steel or Glass	Borosilicate Glass
Nozzle Design	Button-Hook or Elbow	Button-Hook
Probe Liner Material	Borosilicate or Quartz Glass	Borosilicate Glass
Effective Probe Length	N/A	8 feet
Probe Temperature Set-Point	248˚F±25˚F	248˚F±25˚F
Velocity Measuring Equipment		
Pitot Tube Design	Type S	Type S
Pitot Tube Coefficient	N/A	0.84
Pitot Tube Calibration by	Geometric or Wind Tunnel	Geometric
Pitot Tube Attachment	Attached to Probe	Separate Probe
Metering System Console		
Meter Type	Dry Gas Meter	Dry Gas Meter
Meter Accuracy	±2%	±1%
Meter Resolution	N/A	0.01 cubic feet
Meter Size	N/A	0.1 dcf/revolution
Meter Calibrated Against	Wet Test Meter or Standard DGM	Wet Test Meter
Pump Type	N/A	Rotary Vane
Temperature Measurements	N/A	Type K Thermocouple/Pyrometer
Temperature Resolution	5.4˚F	1.0˚F
ΔP Differential Pressure Gauge	Inclined Manometer or Equivalent	Inclined Manometer
ΔH Differential Pressure Gauge	Inclined Manometer or Equivalent	Inclined Manometer
Barometer	Mercury or Aneroid	Digital Barometer calibrated w/Mercury Aneroid
Filter Description		
Filter Location	After Probe	Exit of Probe
Filter Holder Material	Borosilicate Glass	Borosilicate Glass
Filter Support Material	Glass Frit	Teflon
Cyclone Material	N/A	None
Filter Heater Set-Point	248˚F±25˚F	248˚F±25˚F
Filter Material	Glass Fiber	Glass Fiber
Other Components		
Description	N/A	N/A
Location	N/A	N/A
Operating Temperature	N/A	N/A

Specification Sheet for EPA Method 5D

	Standard Method Specification	Actual Specification Used
Impinger Train Description		
Type of Glassware Connections	Ground Glass or Equivalent	Screw Joint with Silicone Gasket
Connection to Probe or Filter by	Direct Glass Connection	Direct Glass Connection
Number of Impingers	4	4
Impinger Stem Types		
Impinger 1	Modified Greenburg-Smith	Modified Greenburg-Smith
Impinger 2	Greenburg-Smith	Greenburg-Smith
Impinger 3	Modified Greenburg-Smith	Modified Greenburg-Smith
Impinger 4	Modified Greenburg-Smith	Modified Greenburg-Smith
Impinger 5		
Impinger 6		
Impinger 7		
Impinger 8		
Gas Density Determination		
Sample Collection	Multi-point integrated	Multi-Point Integrated
Sample Collection Medium	Flexible Gas Bag	Vinyl Bag
Sample Analysis	Orsat or Fyrite Analyzer	Orsat
Sample Recovery Information		
Probe Brush Material	Nylon Bristle	Nylon Bristle
Probe Rinse Reagent	Acetone	Acetone
Probe Rinse Wash Bottle Material	Glass or Polyethylene	Teflon
Probe Rinse Storage Container	Glass or Polyethylene	Glass
Filter Recovered?	Yes	Yes
Filter Storage Container	N/A	Polystyrene
Impinger Contents Recovered?	Provision	N/A
Impinger Rinse Reagent	Deionized Distilled Water	N/A
Impinger Wash Bottle	Glass or Polyethylene	N/A
Impinger Storage Container	Glass or Polyethylene	N/A
Analytical Information		
Method 4 H_2O Determination by	Volumetric or Gravimetric	Gravimetric and Volumetric
Filter Preparation Conditions	Dessicate 24 hours minimum at ambient temperature	Dessicate 24 hours minimum at ambient temperature
Front-Half Rinse Preparation	Evaporate at ambient temperature and pressure	Evaporate at ambient temperature and pressure
Back-Half Analysis	N/A	N/A
Additional Analysis	N/A	None

EPA Method 5
Sampling Train Configuration

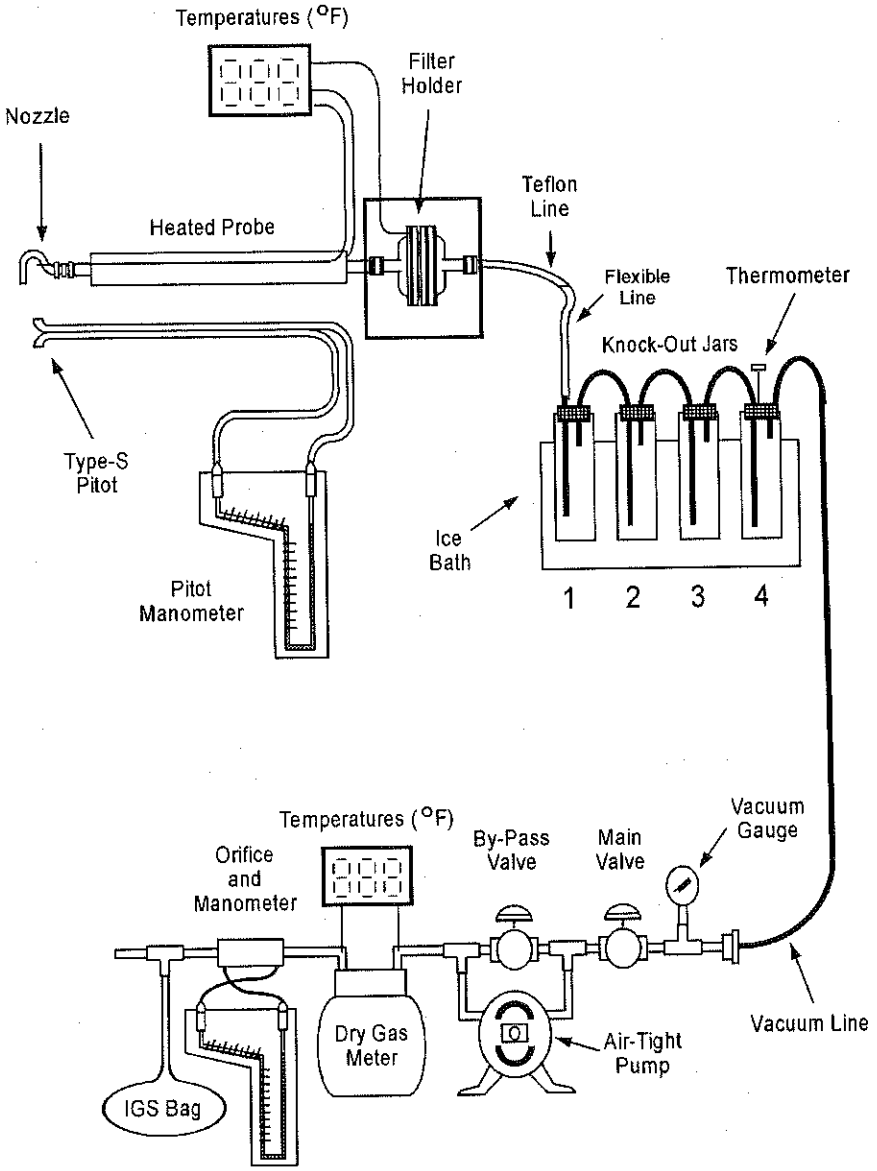

Knock Out Jar Contents

Knock Out Jar 1	100 mL H_2O
Knock Out Jar 2	100 mL H_2O
Knock Out Jar 3	Empty
Knock Out Jar 4	Silica Gel

EPA Method 5
Sample Recovery Flowchart

- Tare all sample containers before sample collection
- Mark all liquid levels and final weights on the outside of each sample container
- Seal all sample containers with Teflon tape
- If recycling, bake silica gel for two hours at 350 degrees F (175 degrees C)

Container 1
Fiberglass Filter
Petri Dish

↓

Remove with tweezers to original container. Brush any loose particulate or filter fibers into sample container

↓

If necessary fold in half and place into container

↓

Visual Inspection

Container 2
Front Half (FH) Rinse
250 ml Glass

↓

Probe liner, nozzle, cyclone or cyclone bypass and filter FH

↓

Brush/rinse 3X with acetone (6X for metal components)

↓

Visual Inspection

↓

Label container and measure volume by weight

Container 3
Silica Gel

↓

Measure volume by weight, note any color change

↓

Recycle silica gel

*Containers 4 and 7 are required when the testing includes a back half analysis

Container 4*
Back Half (BH) Rinse
500 ml Plastic

↓

BH filter housing, Z-piece, impingers 1, 2, 3 and U-Bends

↓

Measure volume by weight

↓

Empty contents into labeled container

↓

Rinse with water

↓

Visual Inspection

↓

Label container and measure volume by weight

Blanks

Container 5
Filter Blank
Plastic Petri Dish

↓

Clean, unused tared filter

Container 6
Acetone Blank
250 ml Glass

↓

200 ml of acetone from rinse bottle. Record lot number

Container 7*
D.I. Water Blank
250 ml Plastic

↓

200 ml of water from rinse bottle

EPA Method 5
Analytical Flowchart

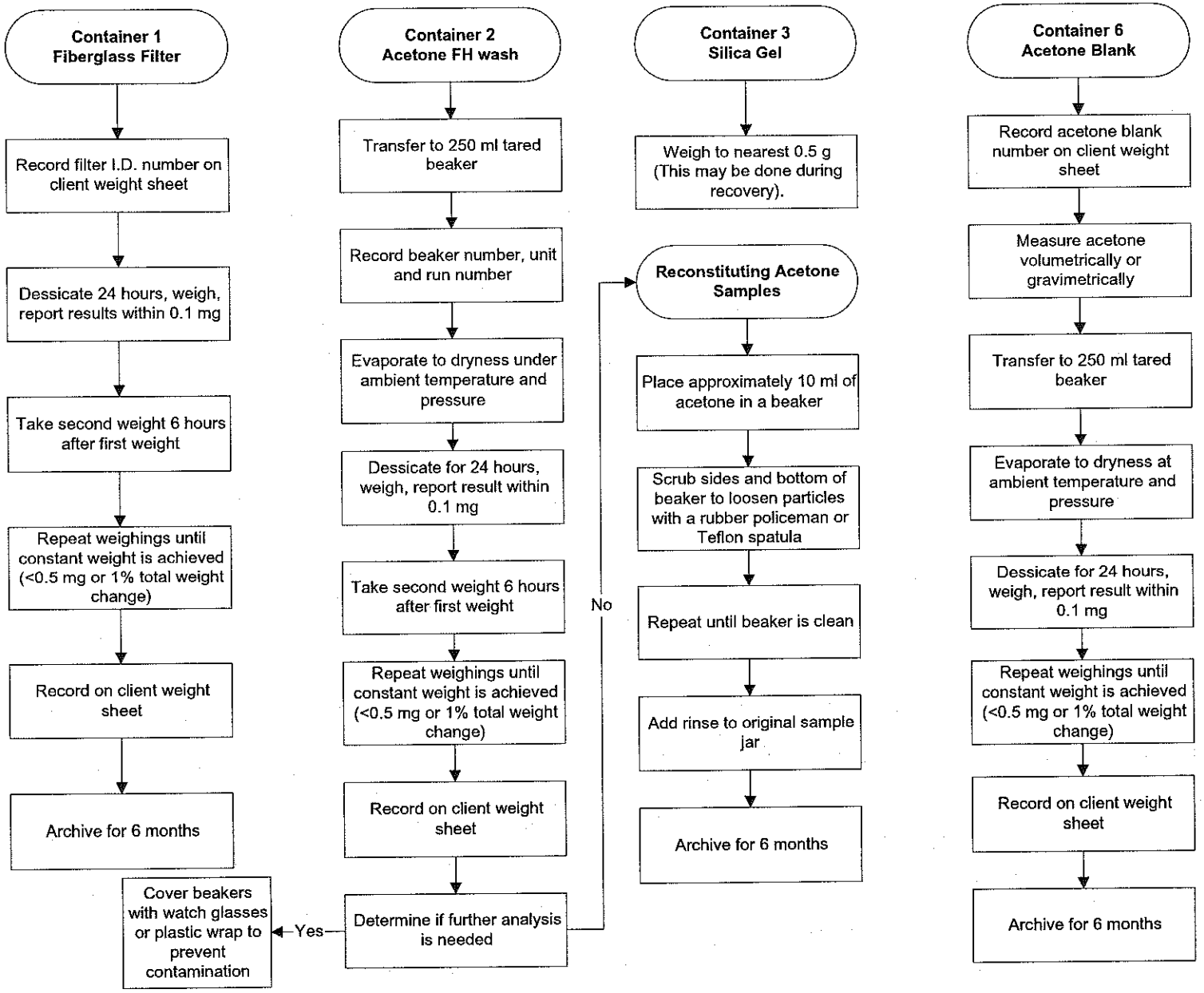

SAMPLE CALCULATIONS

B

A. Finkl and Sons
Clean Air Project No: 9939
Particulate Sampling

USEPA Method 5 (Particulate)
Sampling, Velocity and Moisture Sample Calculations

1. Volume of water collected (wscf)

$$V_{wstd} = (0.04707)(V_{lc})$$

Where:

Vlc	= total volume of liquid collected in impingers and silica gel (ml)	=	ml
0.04707	= ideal gas conversion factor (ft3 water vapor/ml or gm)	=	ft3/ml
Vwstd	= volume of water vapor collected at standard conditions (ft3)	=	ft3

2. Volume of gas metered, standard conditions (dscf)

$$V_{mstd} = \frac{(17.64)(V_m)\left(P_{bar} + \frac{\Delta H}{13.6}\right)(Y_d)}{(460 + T_m)}$$

Where:

Pbar	= barometric pressure (in. Hg)	=	in. Hg
Tm	= average dry gas meter temperature (°F)	=	°F
Vm	= volume of gas sample through the dry gas meter at meter conditions (dcf)	=	dcf
Yd	= gas meter correction factor (dimensionless)	=	
ΔH	= average pressure drop across meter box orifice (in. H2O)	=	in. H2O
17.64	= standard temperature to pressure ratio (°R/in. Hg)	=	°R/in. Hg
13.6	= conversion factor (in. H2O/in. Hg)	=	in.H2O/in. Hg
460	= °F to °R conversion constant	=	°F
Vmstd	= volume of gas sampled through the dry gas meter at standard conditions (dscf)	=	dscf

3. Sample gas pressure (in. Hg)

$$P_s = P_{bar} + \left(\frac{P_g}{13.6}\right)$$

Where:

Pbar	= barometric pressure (in. Hg)	=	in. Hg
Pg	= sample gas static pressure (in. H2O)	=	in. H2O
13.6	= conversion factor (in. H2O/in. Hg)	=	in. H2O/in. Hg
Ps	= absolute sample gas pressure (in. Hg)	=	in. Hg

4. Moisture measured in sample (% by volume)

$$B_{wo} = \frac{V_{wstd}}{\left(V_{mstd} + V_{wstd}\right)}$$

Where:

Vmstd	= volume of gas sampled through the dry gas meter at standard conditions (dscf)	=	dscf
Vwstd	= volume of water collected at standard conditions (scf)	=	scf
Bwo	= proportion of water measured in the gas stream by volume	=	
		=	%

5. Nitrogen (plus carbon monoxide) in gas stream (% by volume, dry)

$$N_2 + CO = 100 - CO_2 - O_2$$

Where:

CO2	= proportion of carbon dioxide in the gas stream by volume (%)	=	%
O2	= proportion of oxygen in the gas stream by volume (%)	=	%
100	= conversion factor (%)	=	%
N2+CO	= proportion of nitrogen and CO in the gas stream by volume (%)	=	%

6. Molecular weight of dry gas stream (lb/lb·mole)

$$M_d = \left(M_{CO_2}\right)\frac{\left(CO_2\right)}{\left(100\right)} + \left(M_{O_2}\right)\frac{\left(O_2\right)}{\left(100\right)} + \left(M_{N_2+CO}\right)\frac{\left(N_2+CO\right)}{\left(100\right)}$$

Where:

MCO2	= molecular weight of carbon dioxide (lb/lb·mole)	=	lb/lb·mole
MO2	= molecular weight of oxygen (lb/lb·mole)	=	lb/lb·mole
MN2+CO	= molecular weight of nitrogen and carbon monoxide (lb/lb·mole)	=	lb/lb·mole
CO2	= proportion of carbon dioxide in the gas stream by volume (%)	=	%
O2	= proportion of oxygen in the gas stream by volume (%)	=	%
N2+CO	= proportion of nitrogen and CO in the gas stream by volume (%)	=	%
100	= conversion factor (%)	=	%
Md	= dry molecular weight of sample gas (lb/lb·mole)	=	lb/lb·mole

7. Molecular weight of sample gas (lb/lb·mole)

$$M_s = (M_d)(1 - B_w) + (M_{H_2O})(B_w)$$

Where:

Bw	= proportion of water vapor in the gas stream by volume	=	
Md	= dry molecular weight of sample gas (lb/lb·mole)	=	lb/lb·mole
MH2O	= molecular weight of water (lb/lb·mole)	=	lb/lb·mole
Ms	= molecular weight of sample gas, wet basis (lb/lb·mole)	=	lb/lb·mole

8. Velocity of sample gas (ft/sec)

$$V_s = (K_p)(C_P)\left(\sqrt{\Delta P}\right)\left(\sqrt{\frac{(T_s + 460)}{(M_s)(P_s)}}\right)$$

Where:

Kp	= velocity pressure constant	=	
Cp	= pitot tube coefficient	=	
Ms	= wet molecular weight of sample gas, wet basis (lb/lb·mole)	=	lb/lb·mole
Ps	= absolute sample gas pressure (in. Hg)	=	in. Hg
Ts	= average sample gas temperature (°F)	=	°F
√ΔP	= average square roots of velocity heads of sample gas (in. H2O)	=	√in. H2O
460	= °F to °R conversion constant	=	°F
Vs	= sample gas velocity (ft/sec)	=	ft/sec

9. Volumetric flow rate of sample gas at actual gas conditions (acfm)

$$Q_a = (60)(A_s)(V_s)$$

Where:

As	= cross sectional area of sampling location (ft2)	=	ft2
Vs	= sample gas velocity (ft/sec)	=	ft/sec
60	= conversion factor (sec/min)	=	sec/min
Qa	= volumetric flow rate at actual conditions (acfm)	=	acfm

10. Total flow of sample gas (scfm)

$$Q_s = (Q_a)\left(\frac{P_s}{29.92}\right)\left(\frac{68+460}{T_s+460}\right)$$

Where:

Qa	= volumetric flow rate at actual conditions (acfm)	=	acfm
Ps	= absolute sample gas pressure (in. Hg)	=	in. Hg
29.92	= standard pressure (in. Hg)	=	in. Hg
Ts	= average sample gas temperature (°F)	=	°F
68	= standard temperature (°F)	=	°F
460	= °F to °R conversion constant	=	
Qs	= volumetric flow rate at standard conditions, wet basis (scfm)	=	scfm

11. Dry flow of sample gas (dscfm)

$$Q_{std} = (Q_s)(1-B_w)$$

Where:

Bw	= proportion of water vapor in the gas stream by volume	=	
Qs	= volumetric flow rate at standard conditions, wet basis (scfm)	=	scfm
Qstd	= volumetric flow rate at standard conditions, dry basis (dscfm)	=	dscfm

12. Percent isokinetic (%)

$$I = \frac{(0.09450)\left(\overline{T_s}+460\right)(V_{mstd})}{(P_s)(V_s)\left(\frac{(D_n)^2(\pi)}{(144)(4)}\right)(\Theta)(1-B_w)}$$

Where:

Dn	= diameter of nozzle (in)	=	in.
Bw	= proportion of water vapor in the gas stream by volume	=	
Ps	= absolute sample gas pressure (in. Hg)	=	in. Hg
Ts	= average sample gas temperature (°F)	=	°F
Vmstd	= volume of gas sample through the dry gas meter at standard conditions (dscf)	=	dscf
Vs	= sample gas velocity (ft/sec)	=	ft/sec
θ	= total sampling time (min)	=	min
0.0945	= conversion constant	=	
460	= °F to °R conversion constant	=	°F
I	= percent of isokinetic sampling (%)	=	%

Method 5D Flow Calculations

13. Velocity of sample gas at the outlet based on flow measurements at the inlet, Method 5D

$$v = \frac{Q_o}{A_o}$$

Where:

v	= sample gas average velocity (ft/sec)	=	ft/sec
Qo	= volumetric flow rate at outlet sample location (cfm)	=	cfm
Ao	= cross sectional area of outlet sampling location (ft2)	=	ft2

14. Total volumetric flowrate at the outlet, Method 5D

$$Q_O = Q_i + Q_d$$

Where:

Qo	= volumetric flow rate at outlet sample location (cfm)	=	cfm
Qi	= volumetric flow rate at the outlet (cfm)	=	cfm
Qd	= volumetric flow rate of dilution air (cfm)	=	cfm

15. Dilution air volumetric flowrate Method 5D

$$Q_d = \frac{Q_i\left(T_i + T_o\right)}{T_o - T_{amb}}$$

Where:

Qd	= volumetric flow rate of dilution air (cfm)	=	cfm
Qi	= volumetric flow rate at the outlet (cfm)	=	cfm
Ti	= average temperature of gas at inlet, (ºK)	=	ºK
To	= average temperature of gas at outlet, (ºK)	=	ºK
Tamb	= average ambient temperature, (ºK)	=	ºK

Particulate Sample Calculations

1. Particulate concentration (lb/dscf)

$$C_{sd} = \left(\frac{m_n}{V_{mstd}}\right)\left(2.205 \times 10^{-3}\right)$$

Where:

mn	= total particulate matter (g)	=	g
Vmstd	= volume metered, standard (dscf)	=	dscf
2.205 x 10-3	= conversion factor (lb/g)	=	lb/g
Csd	= particulate concentration (lb/dscf)	=	lb/dscf

2. Particulate concentration (gr/dscf)

$$C_{sd} = \left(\frac{m_n}{V_{mstd}}\right)(15.43)$$

Where:

mn	= total particulate matter (g)	=	g
Vmstd	= volume metered, standard (dscf)	=	dscf
15.43	= conversion factor (gr/g)	=	gr/g
Csd	= particulate concentration (gr/dscf)	=	gr/dscf

3. Particulate concentration (mg/dscm)

$$C_{sd} = \left(\frac{m_n}{V_{mstd}}\right)(1000)(35.31)$$

Where:

mn	= total particulate matter (g)	=	g
Vmstd	= volume metered, standard (dscf)	=	dscf
1,000	= conversion factor (mg/g)	=	mg/g
35.31	= conversion factor (dscf/dscm)	=	dscf/dscm
Csd	= particulate concentration (mg/dscm)	=	mg/dscm

5. Particulate rate (lb/hr)

$$E_{lb/hr} = \left(\frac{m_n}{V_{mstd}}\right)\left(2.205 \times 10^{-3}\right)\left(Q_{std}\right)(60)$$

Where:

mn	= total particulate matter (g)	=	g
Vmstd	= volume metered, standard (dscf)	=	dscf
2.205 x 10-3	= conversion factor (lb/g)	=	lb/g
Qstd	= volumetric flow rate at standard conditions, dry basis (dscfm)	=	dscfm
60	= conversion factor (min/hr)	=	min/hr
Elb/hr	= particulate rate (lb/hr)	=	lb/hr

SAMPLE DATA FIELD SHEETS

C

TEST LOCATION: _____ _____ **TESTING METHOD:** _____ **PAGE** ___ **OF** ___

UNIT: _____ **RUN:** _____

FIELD DATA SHEET

Client	Project No.
Plant	Date
Meter Operator	
Probe Operator	

Meter Box	Sample Box No.
Meter Y_d	Meter $\Delta H_@$
K Factor	Pitot C_p
Leak Rate Before [cfm] [Lpm] @ (in. Hg)	
Leak Rate After [cfm] [Lpm] @ (in. Hg)	
Pitot Leak Check Before: ☐	After: Good ☐ Bad ☐

Cross-Section of Test Location

[N] [UP]

Duct Dimensions (in.)

Static Pres (in. H_2O)	Port Len. (in.)	Gas Flow [In] [Out] of page	First point all the way [In] [Out]

Amb. Temp. (°F)	Bar. Press. [in. Hg] [mbar]	
Probe I.D. No.		
Liner Material		
Filter No.		
Thimble No.		
Nozzle Diameter	Nozzle I.D.	

Start Time:	Stop Time:

Traverse Point Number	Min/pt / Elapsed Time	Velocity Head ΔP (in. H_2O)	Orifice Setting ΔH (in. H_2O)	Gas Sample Volume V_m Init. Vol [ft³] [L]	Stack Temp. T_s (°F)	Probe T_p (°F) / Filter T_f (°F) Set Points		Cond. Temp. T_c (°F)	DGM Inlet $T_{m\,in}$ (°F)	DGM Outlet $T_{m\,out}$ (°F)	Pump Vacuum (in.Hg)	XAD Trap Temp. T_t (°F)	Notes
	Total	*											
	Average												

* Sum of square roots.

Circle correct bracketed units on data sheet.

SAMPLE

CleanAir ENGINEERING

QA/QC_____
Date

Copyright © 2004 Clean Air Engineering, Inc.

METHOD 1 FIELD DATA SHEET

TEST LOCATION: _____

UNIT: _____

Client		Project No.	
Plant		Date	
Duct Dimensions	(in.)	Area	(ft^2)
Port Length	(in.)	Port Diameter	(in.)
Equivalent Diameter (Rectangular Ducts) $D_{eq}=2LW/(L+W)$			(in.)
Disturbance to Port Distance Upstream (A)			x D
Disturbance to Port Distance Downstream (B)			x D
Number of Points Required			
Number of Points / Port Required			

Point	% Diameter	Point Distance	Probe Mark
	Round Stacks Only	X	X + Port Depth

Location Schematic

Show side view of stack, including disturbances and port placement.

[N] [UP]

Traverse point number	Number of traverse points on a diameter					
	2	4	6	8	10	12
1	85.[illegible]	93.3	95.6	96.8	97.4	97.9
2	14.6	[illegible]	85.4	89.5	91.8	93.3
3		25.[illegible]	70.4	80.6	85.4	88.2
4		6.7	29.6	67.7	77.4	82.3
5			14.6	32.3	65.8	75.0
6			4.4	19.4	34.2	64.4
7				10.5	22.6	35.6
8				3.2	14.6	25.0
9					8.2	17.7
10					2.6	11.8
11						6.7
12						2.1

Location Schematic

Show cross-section of stack, indicating port placement.

[N] [UP]

Gas Flow
[IN] [OUT]
of page

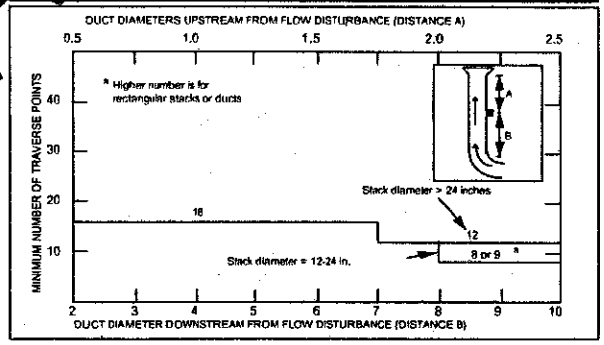

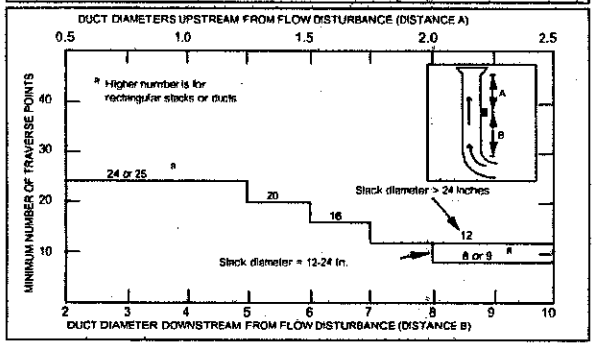

Circle correct bracketed directions on diagrams.

SAMPLE

QA/QC_____

Date_____

Copyright © 2004 Clean Air Engineering, Inc.

CleanAir ENGINEERING

ORSAT READINGS

TEST LOCATION:_____ **PAGE** _____ **OF**_____

Client		Project Number		$Fo = \frac{20.9 - \%O_2}{\%CO_2}$
Plant		Unit		
Orsat ID		Fuel Type		Leak Check Passed ☐

Run Number	Method Number	Trial	Percent CO_2	Percent O_2+CO_2	Percent O_2	Fo	Analyst	Analysis Date	Analysis Time
		1							
		2							
		3							
		Avg.							
		1							
		2							
		3							
		Avg.							
		1							
		2							
		3							
		Avg.							
		1							
		2							
		3							
		Avg.							
		1							
		2							
		3							
		Avg.							
		1							
		2							
		3							
		Avg.							

SAMPLE

Repeat the analysis procedure until the results of any three analyses differ by no more than 0.2 percent by volume Average the three acceptable values and report the results to the nearest 0.1 percent. Calculate Fo to verify result

Acceptable ranges for Fo:

Coal:	Anthracite and lignite	1.016-1.130	Gas:	Natural	1.600-1.836
	Bituminous	1.083-1.230		Propane	1.434-1.586
Oil:	Distillate	1.260-1.413		Butane	1.405-1.553
	Residual	1.210-1.370	Wood:		1.000-1.120

QA/QC_____
Date_____

FD6003-Orsat.xls, August 2004
Copyright © 2004 Clean Air Engineering, Inc.

CleanAir ENGINEERING

TEST LOCATION: _____

UNIT: _____

VELOCITY DETERMINATION FIELD DATA SHEET

PAGE ___ OF ___

Client	Project No.
Plant	Date
Meter Operator	
Probe Operator	
Source of Moisture and Molecular Weight Data	

Cross-Section of Test Location

[N] [UP]

Amb. Temp. (°F)	Bar. Press [in. Hg] [mbar]
Pitot Cp	Probe I.D. No.
Duct Diameters from Disturbance	
Downstream	Upstream
First point all the way [In] [Out]	Port Len. (in.)
Gas flow [In] [Out] of page	
Duct Dimensions (in.)	

Run	Load	Run	Load	Run	Load	Run	Load
Start Time	Stop Time	Start Time	Stop Time	Start Time	Stop Time	Start Time	Stop Time
Static Press. (in. H_2O)		Static Press. (in. H_2O)		Static Press. (in. H_2O)		Static Press. (in. H_2O)	
Post-Test Leak Check: Pass ☐ Fail ☐		Post-Test Leak Check: Pass ☐ Fail ☐		Post-Test Leak Check: Pass ☐ Fail ☐		Post-Test Leak Check: Pass ☐ Fail ☐	

Traverse Point Number	Stack Temp. T_s (°F)	Velocity Head ΔP (in.H_2O)	Notes	Traverse Point Number	Stack Temp. T_s (°F)	Velocity Head ΔP (in.H_2O)	Notes	Traverse Point Number	Stack Temp. T_s (°F)	Velocity Head ΔP (in.H_2O)	Notes	Traverse Point Number	Stack Temp. T_s (°F)	Velocity Head ΔP (in.H_2O)	Notes
Total		*				*				*				*	
Average															

* Sum of square roots.

Circle correct bracketed units on data sheet.

QA/QC_____

Date_____

CleanAir ENGINEERING

FDS002-Velocity.xls, August 2004

Copyright © 2004 Clean Air Engineering, Inc.

SAMPLE

REGION 5
MANUAL

DELEGATIONS MANUAL

CLEAN AIR ACT AMENDMENTS OF 1990

7-121. Alternative Methods

1. AUTHORITY.

a. To approve or disapprove alternatives to any monitoring methods required under 40 CFR Part 60, 61, or 63 pursuant to Section 111(f), 111(h), 112(d), 112(f) and 112(h) of the Clean Air Act.

b. To approve or disapprove alternative test methods, equivalent methods, alternative standards, or procedures required under 40 CFR Part 60, 61, or 63 pursuant to Section 111(f), 111(h), 112(d), 112(f) and 112(h) of the Clean Air Act.

2. TO WHOM DELEGATED.

a. Authority 1a. is delegated to the Branch Chiefs of the Air and Radiation Division.

b. Authority 1b. is delegated to the Director of the Office of Air Quality Planning and Standards.

3. REDELEGATION AUTHORITY. Authority 1a. may not be redelegated further. Authority 1b. may be redelegated to the Branch Chief level or equivalent within the Office of Air Quality Planning and Standards.

4. ADDITIONAL REFERENCES.

a. 40 CFR 60.8(b)(2) and 40 CFR 60.8(b)(3)

b. 40 CFR 61.13(h)(1)(ii)

c. 40 CFR 63.6(g), 40 CFR 63.7(e)(2)(ii), 40 CFR 63.7(f), and 40 CFR 63.8(f).

d. Section 111 of the Clean Air Act.

e. Section 112 of the Clean Air Act.

f. This delegation, Alternative Methods, and the delegation titled Performance Test supersede delegation 7-14

TN # 7-96

CLEAN AIR ACT

7-121. Alternative Methods

1. AUTHORITY.

   a. To approve or disapprove alternatives to any monitoring methods required under 40 CFR Part 60, 61, 63, or 65 pursuant to Sections 111(f), 111(h), 112(d), 112(f) and 112(h) of the Clean Air Act.

   b. To approve or disapprove alternative test methods, equivalent methods, alternative standards, or procedures required under 40 CFR Part 60, 61, 63, or 65 pursuant to Sections 111(f), 111(h), 112(d), 112(f) and 112(h) of the Clean Air Act.

2. TO WHOM DELEGATED.

   a. Authority 1a. is delegated to Regional Administrators.

   b. Authority 1b. is delegated to the Assistant Administrator of the Office of Air and Radiation.

3. LIMITATIONS.

   None.

4. REDELEGATION AUTHORITY.

   a. The authority in 2a. may be redelegated to the Branch Chief level, or equivalent, and no further.

   b. The authority in 2b. May be redelegated to the Director of the Office of Air Quality Planning and Standards. This authority may be further redelegated to the Branch Chief level, or equivalent, and it may not be redelegated further.

5. ADDITIONAL REFERENCES.

   a. 40 CFR 60.8(b)(2), 40 CFR 60.8(b)(3), and 40 CFR 60.13(i).

   b. 40 CFR 61.13(h)(1)(ii) and 40 CFR 61.14(g).

   c. 40 CFR 63.6(g), 40 CFR 63.7(e)(2)(ii), 40 CFR 63.7(f), 40 CFR 63.8(b)(1), and 40 CFR 63.8(f).