COUNTY ROAD 595
PROPOSED BRIDGE PLANS

MARQUETTE COUNTY, MICHIGAN

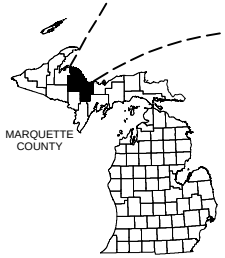

COUNTY LOCATION MAP
NOTE: NOT TO SCALE

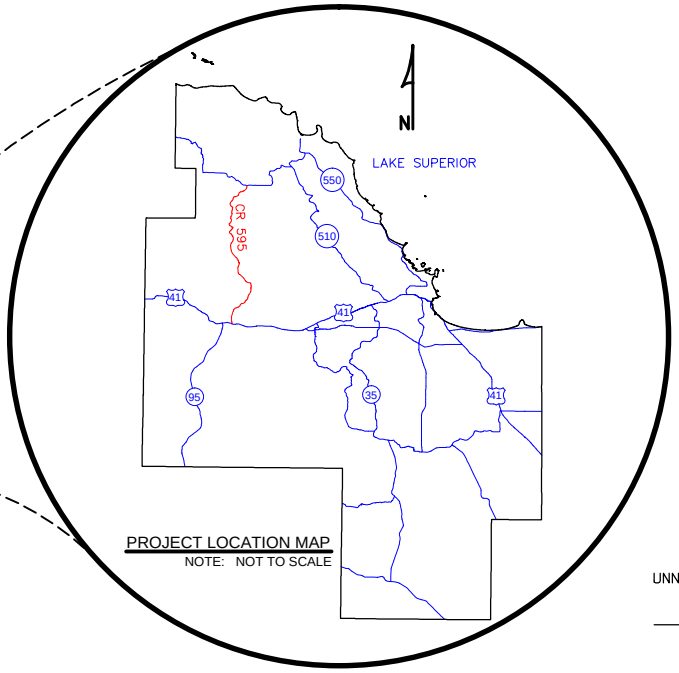

PROJECT LOCATION MAP
NOTE: NOT TO SCALE

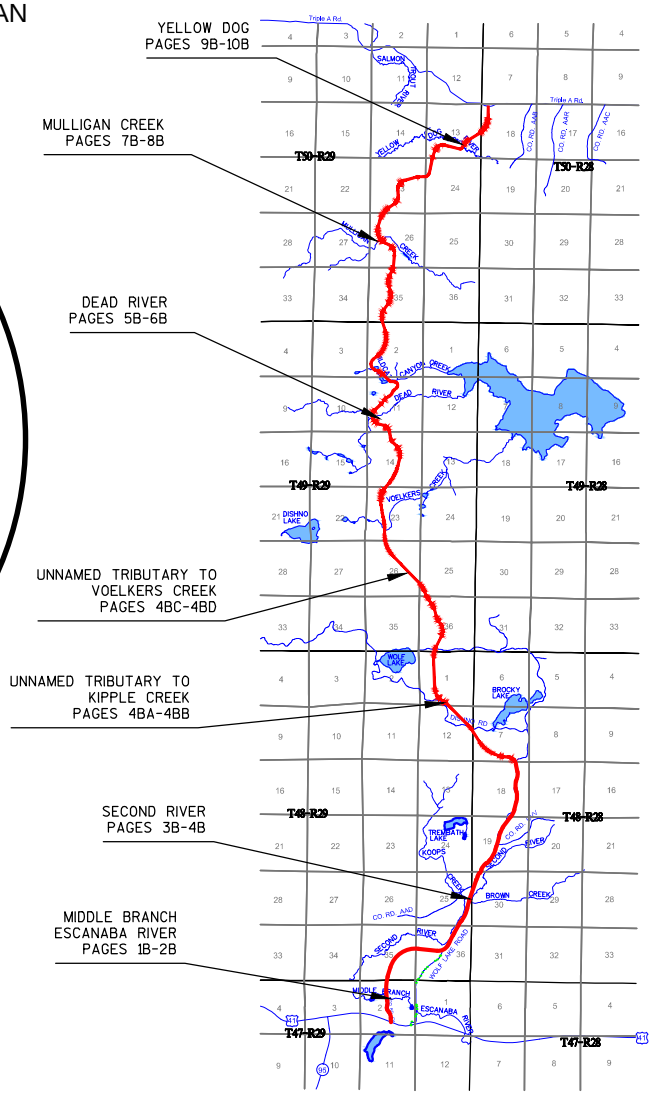

COLEMAN ENGINEERING COMPANY 635 CIRCLE DRIVE – IRON MOUNTAIN, MICHIGAN 49801 (906) 774-3440 200 EAST AYER STREET – IRONWOOD, MICHIGAN 49938 (906) 932-5048	PROPOSED BRIDGE PLANS COUNTY ROAD 595 MARQUETTE COUNTY, MICHIGAN	CADD DRAWING 595 FIGURE COVERS KIPPLE	DATE: 6/6/12	A

Bridge Legend

Proposed Road (Plan)

Floodplain Limit

AA8 Delineated Wetland

Riprap Ditch Outfall

1575 Datum Elevation, Michigan State Plane, North Zone Grid NAD 83, NAVD 88

314+00 Station Data

Proposed Riprap Culvert Protection (typ)

Proposed Bridge Abutment

Existing Road

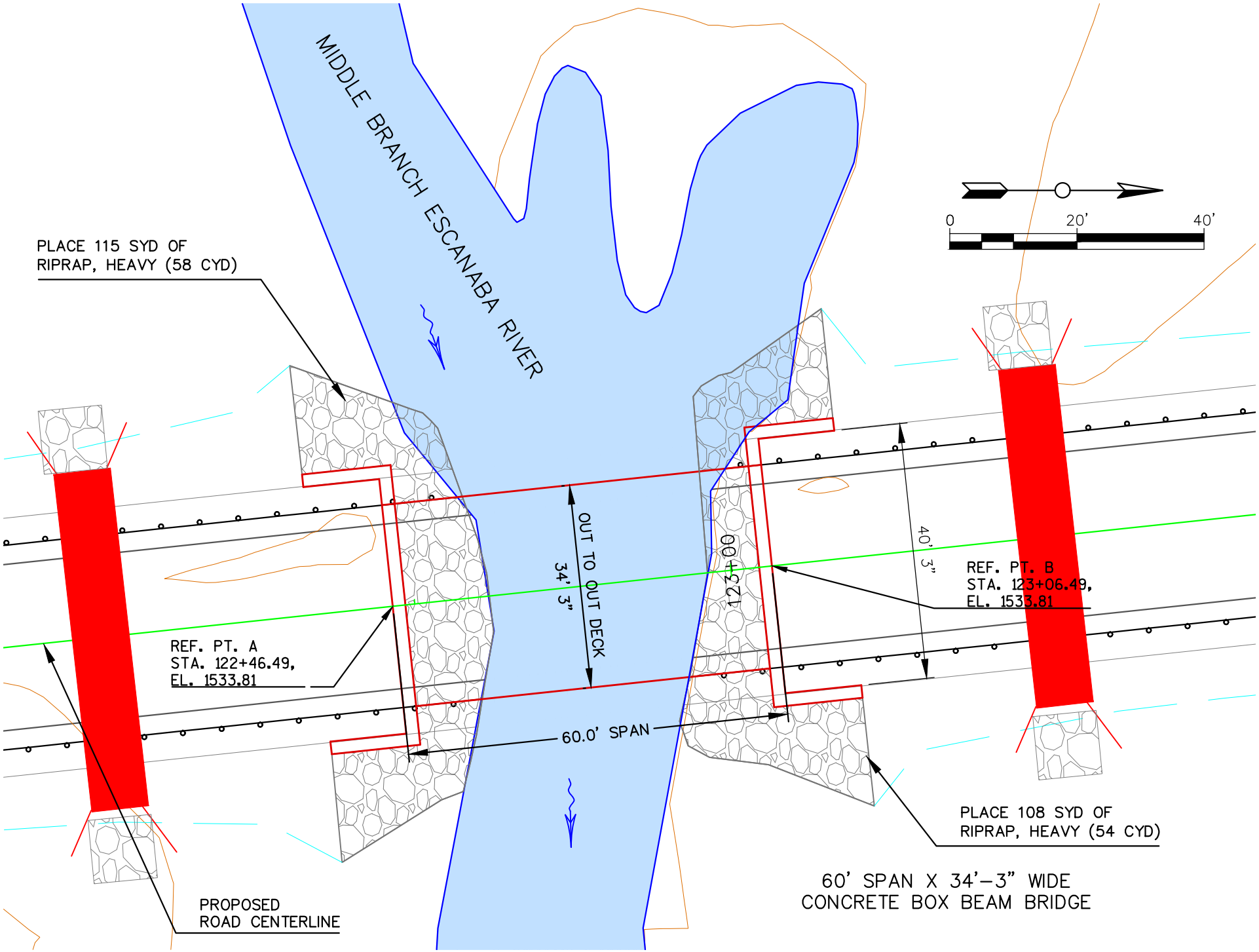

60' SPAN X 34'-3" WIDE
CONCRETE BOX BEAM BRIDGE

COLEMAN ENGINEERING COMPANY
635 CIRCLE DRIVE – IRON MOUNTAIN, MICHIGAN 49801 (906) 774-3440
200 EAST AYER STREET – IRONWOOD, MICHIGAN 49938 (906) 932-5048

BRIDGE B1 - MIDDLE BRANCH ESCANABA RIVER NEW BRIDGE
COUNTY ROAD 595 MARQUETTE COUNTY, MICHIGAN

CADD DRAWING
595 ESCANABA
BRIDGE

DATE:
5/29/12

1B

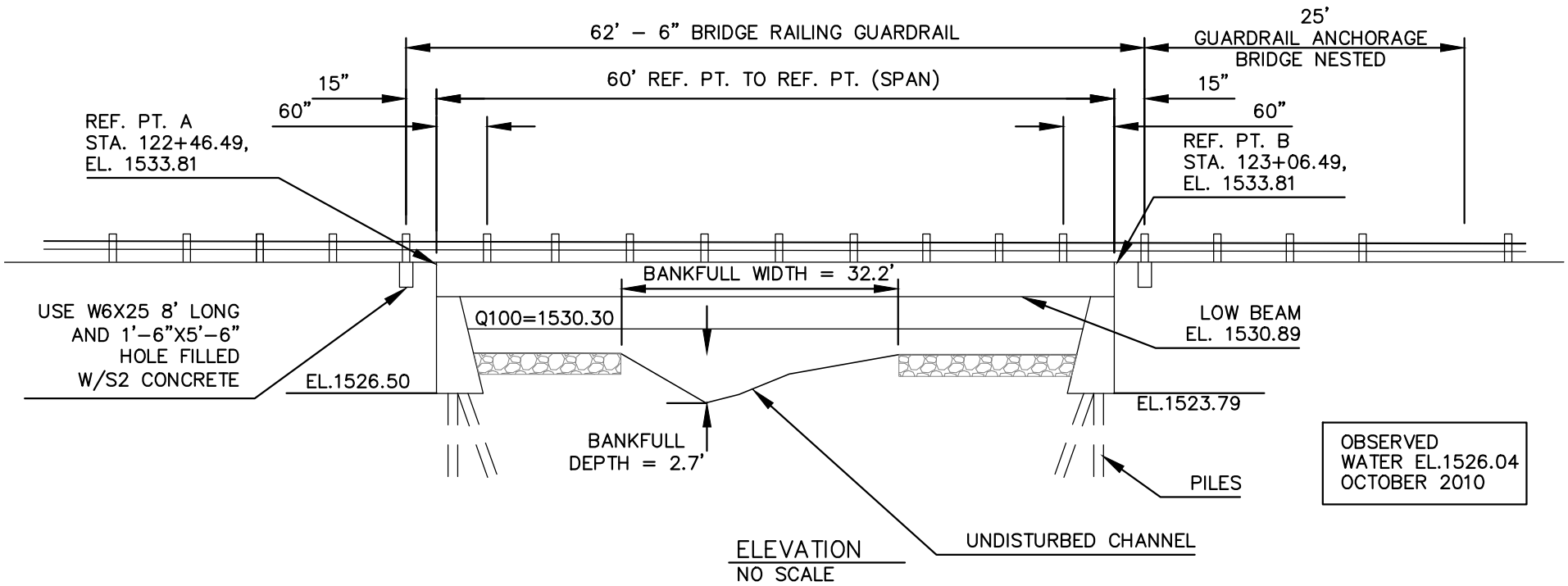

ELEVATION
NO SCALE

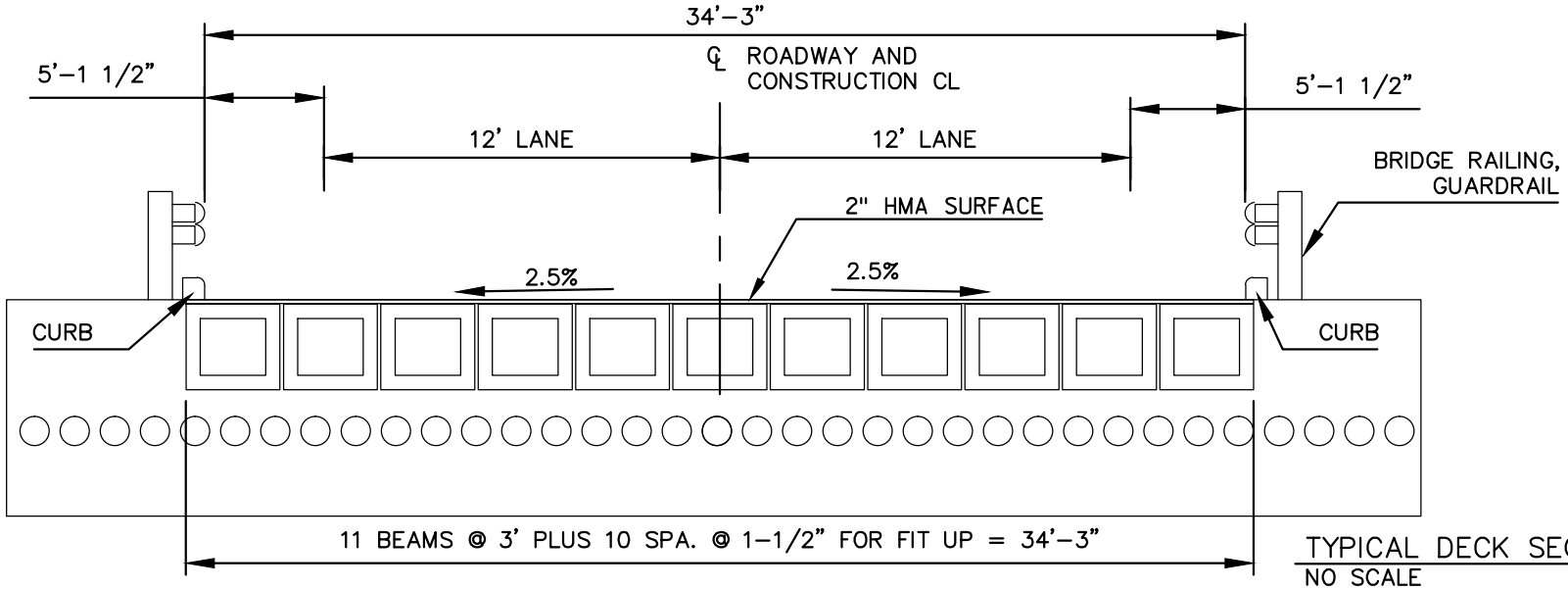

TYPICAL DECK SECTION
NO SCALE

COLEMAN ENGINEERING COMPANY
635 CIRCLE DRIVE – IRON MOUNTAIN, MICHIGAN 49801 (906) 774–3440
200 EAST AYER STREET – IRONWOOD, MICHIGAN 49938 (906) 932–5048

BRIDGE B1 - MIDDLE BRANCH ESCANABA RIVER NEW BRIDGE
COUNTY ROAD 595 MARQUETTE COUNTY, MICHIGAN

CADD DRAWING 595 ESCANABA BRIDGE

DATE: 6/5/12

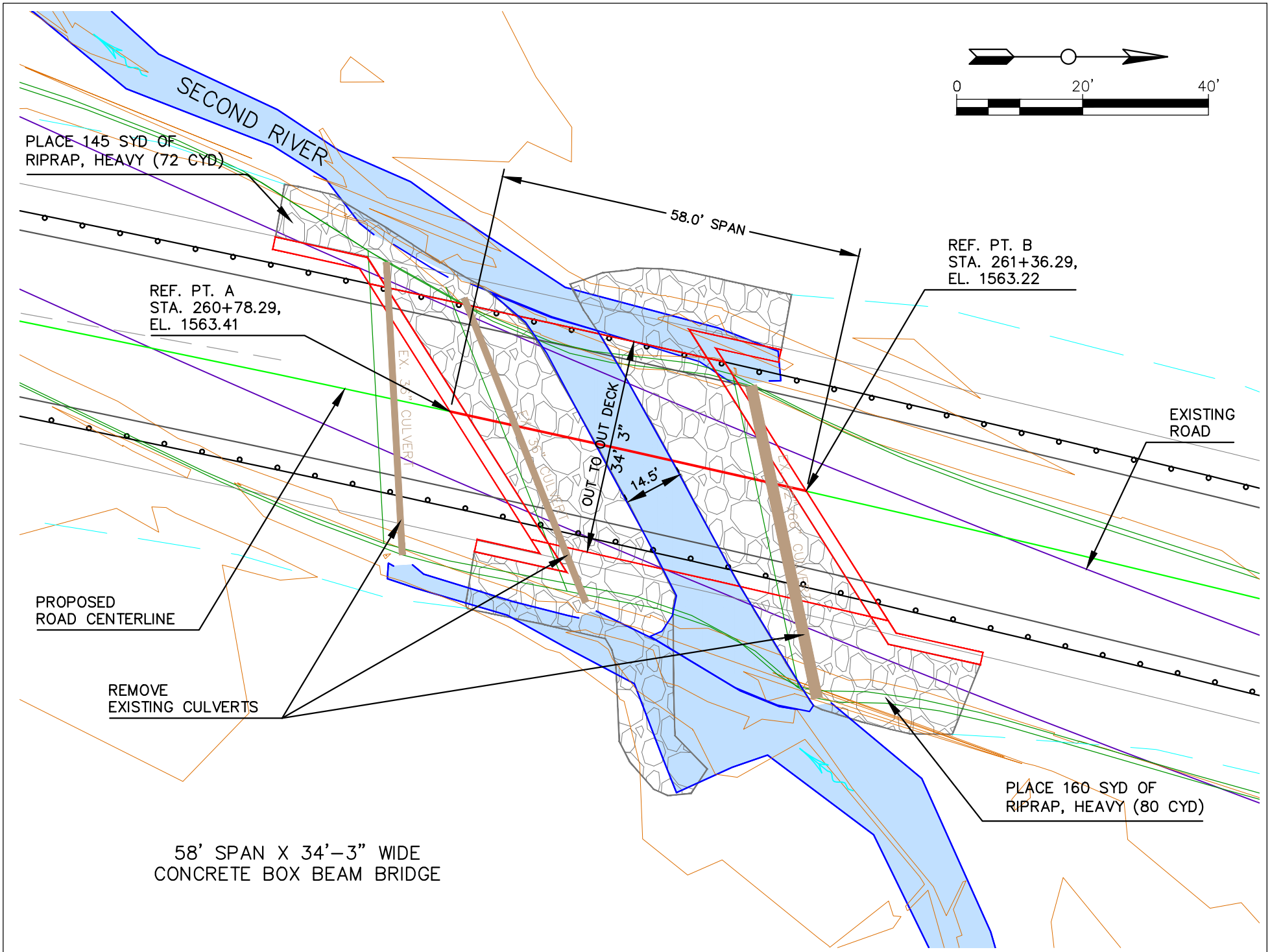

COLEMAN ENGINEERING COMPANY
635 CIRCLE DRIVE – IRON MOUNTAIN, MICHIGAN 49801 (906) 774-3440
200 EAST AYER STREET – IRONWOOD, MICHIGAN 49938 (906) 932-5048

BRIDGE B2 - SECOND RIVER NEW BRIDGE
COUNTY ROAD 595 MARQUETTE COUNTY, MICHIGAN

CADD DRAWING
595 SECOND RIVER BRIDGE

DATE:
6/5/12

3B

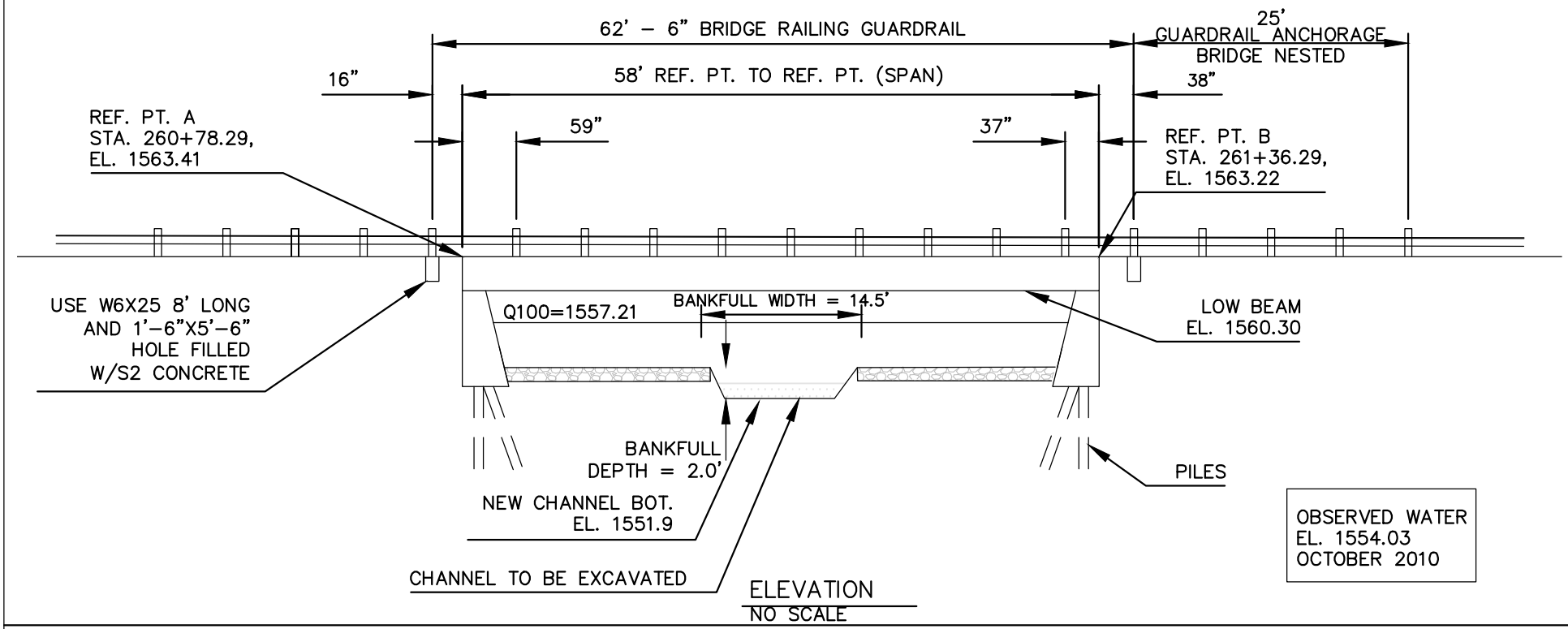

ELEVATION
NO SCALE

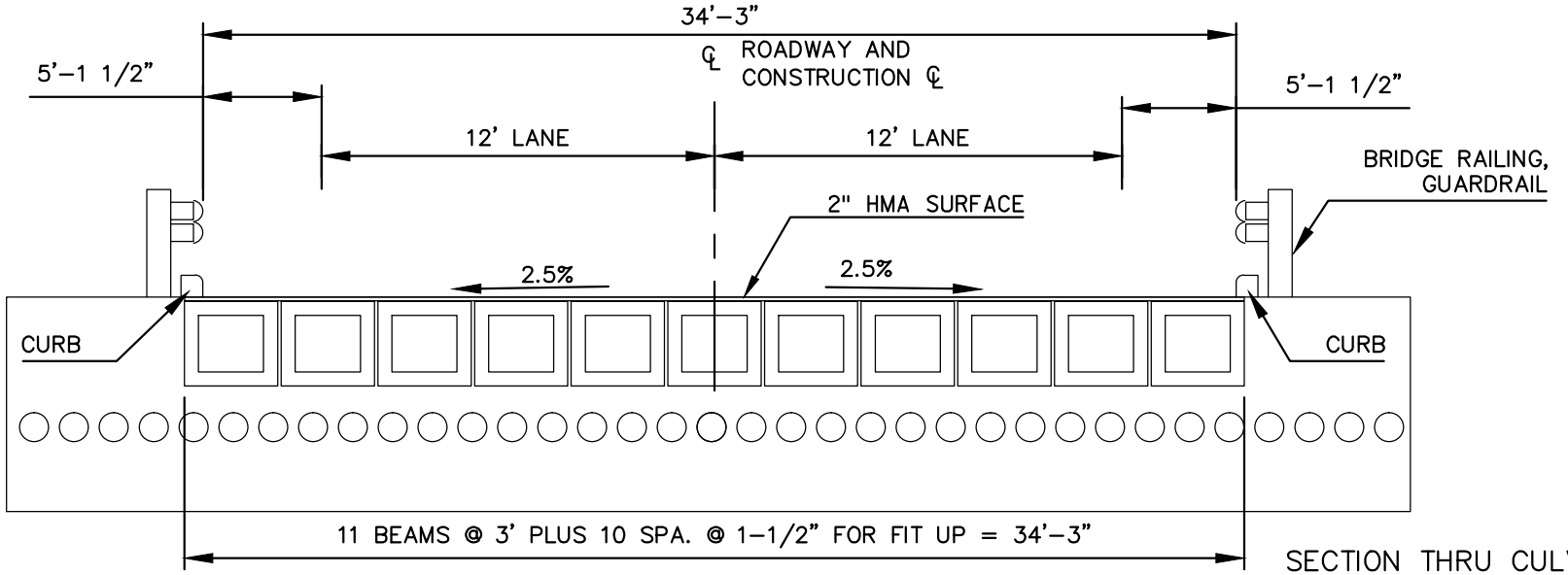

SECTION THRU CULVERT
NO SCALE

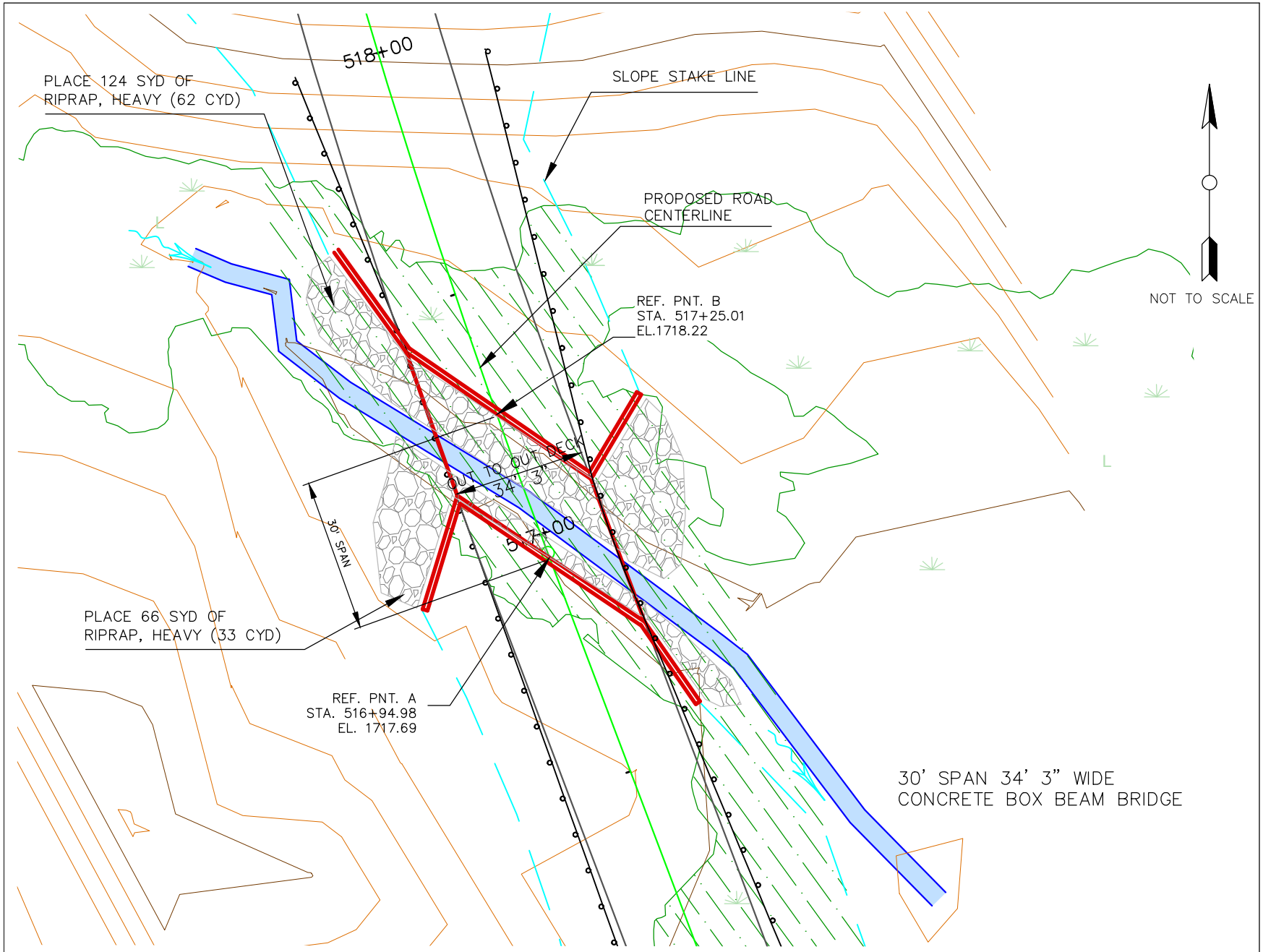

COLEMAN ENGINEERING COMPANY
635 CIRCLE DRIVE – IRON MOUNTAIN, MICHIGAN 49801 (906) 774–3440
200 EAST AYER STREET – IRONWOOD, MICHIGAN 49938 (906) 932–5048

BRIDGE E109 - UNNAMED TRIBUTARY TO KIPPLE CREEK - NEW BRIDGE
COUNTY ROAD 595 MARQUETTE COUNTY, MICHIGAN

CADD DRAWING
KIPPLE CREEK
BRIDGE

DATE:
5/29/12

4BA

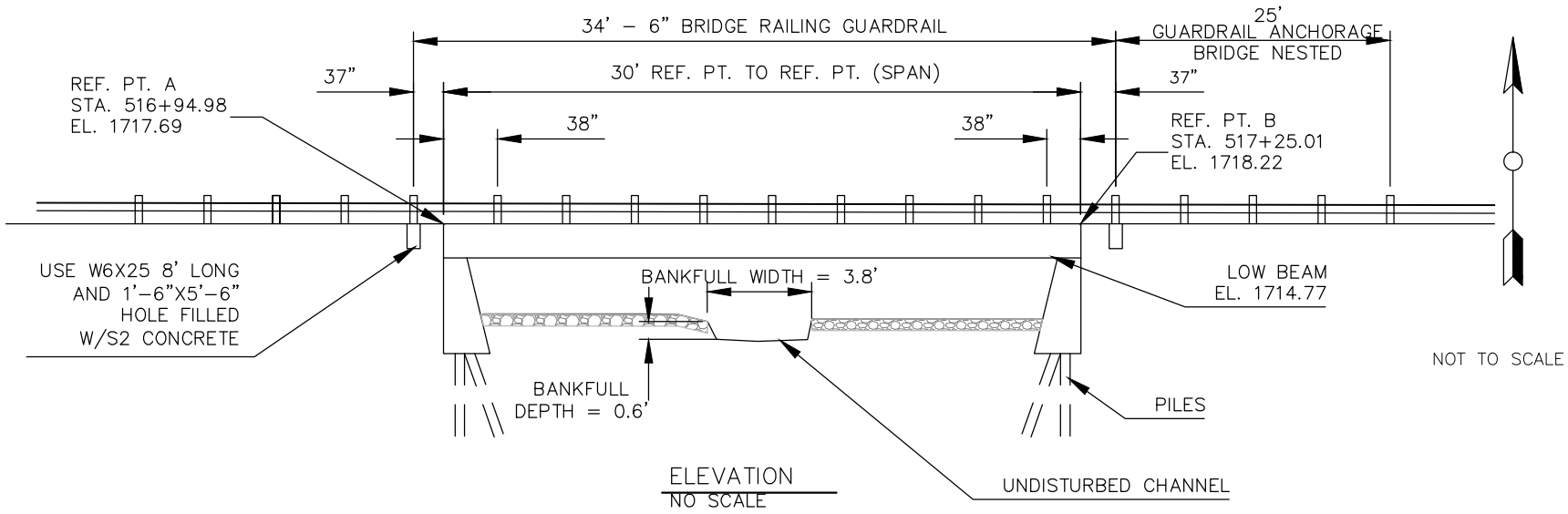

ELEVATION
NO SCALE

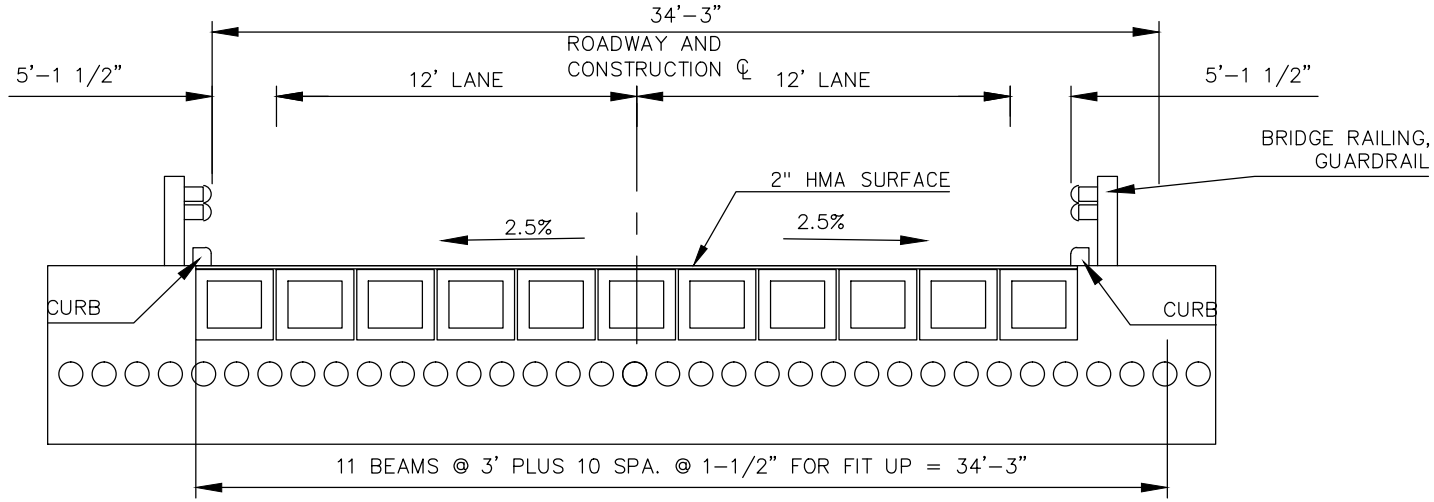

SECTION THRU CULVERT
NO SCALE

COLEMAN ENGINEERING COMPANY 635 CIRCLE DRIVE – IRON MOUNTAIN, MICHIGAN 49801 (906) 774–3440 200 EAST AYER STREET – IRONWOOD, MICHIGAN 49938 (906) 932–5048	BRIDGE E109 - UNNAMED TRIBUTARY TO KIPPLE CREEK NEW BRIDGE COUNTY ROAD 595 MARQUETTE COUNTY, MICHIGAN	CADD DRAWING KIPPLE CREEK BRIDGE	DATE: 6/5/12	4BB

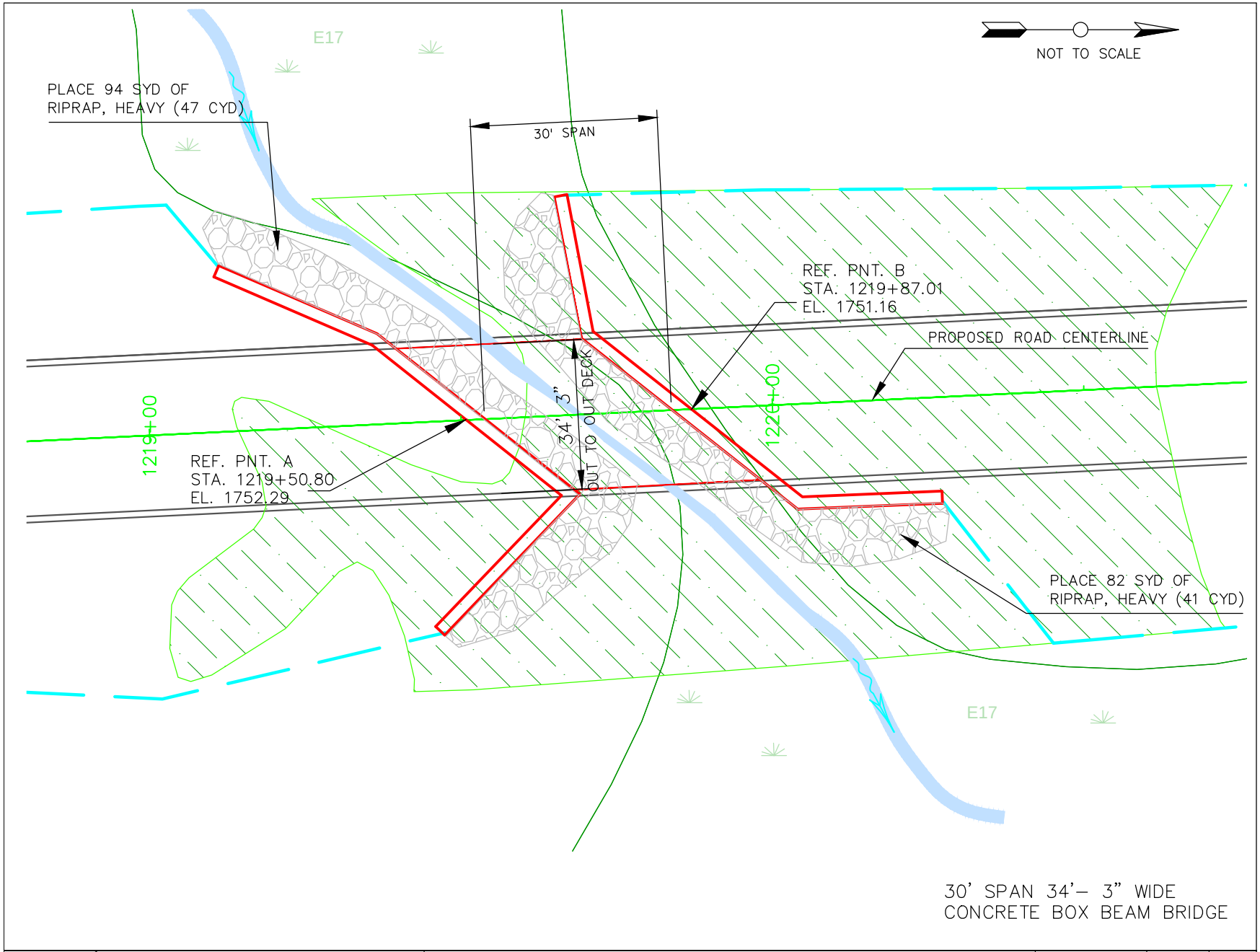

30' SPAN 34'– 3" WIDE
CONCRETE BOX BEAM BRIDGE

COLEMAN ENGINEERING COMPANY 635 CIRCLE DRIVE – IRON MOUNTAIN, MICHIGAN 49801 (906) 774–3440 200 EAST AYER STREET – IRONWOOD, MICHIGAN 49938 (906) 932–5048	BRIDGE D28 - UNNAMED TRIBUTARY TO VOELKERS CREEK NEW BRIDGE COUNTY ROAD 595 MARQUETTE COUNTY, MICHIGAN	CADD DRAWING 595–STREAM– VOELKERS BRIDGE	DATE: 5/29/12	4BC

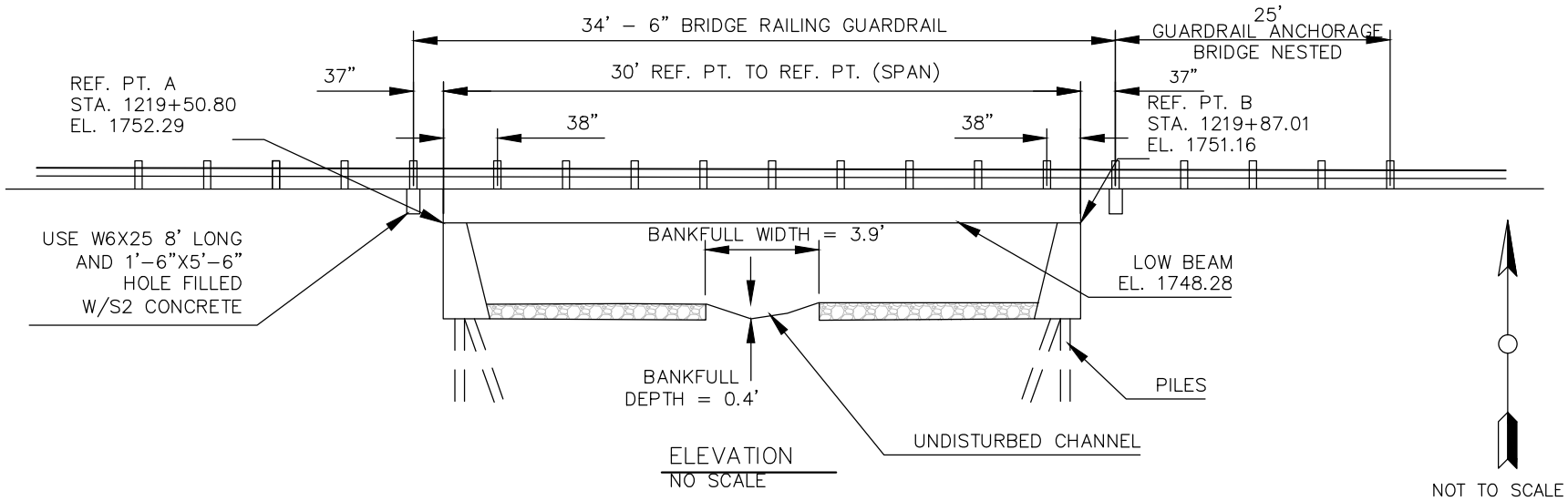

ELEVATION
NO SCALE

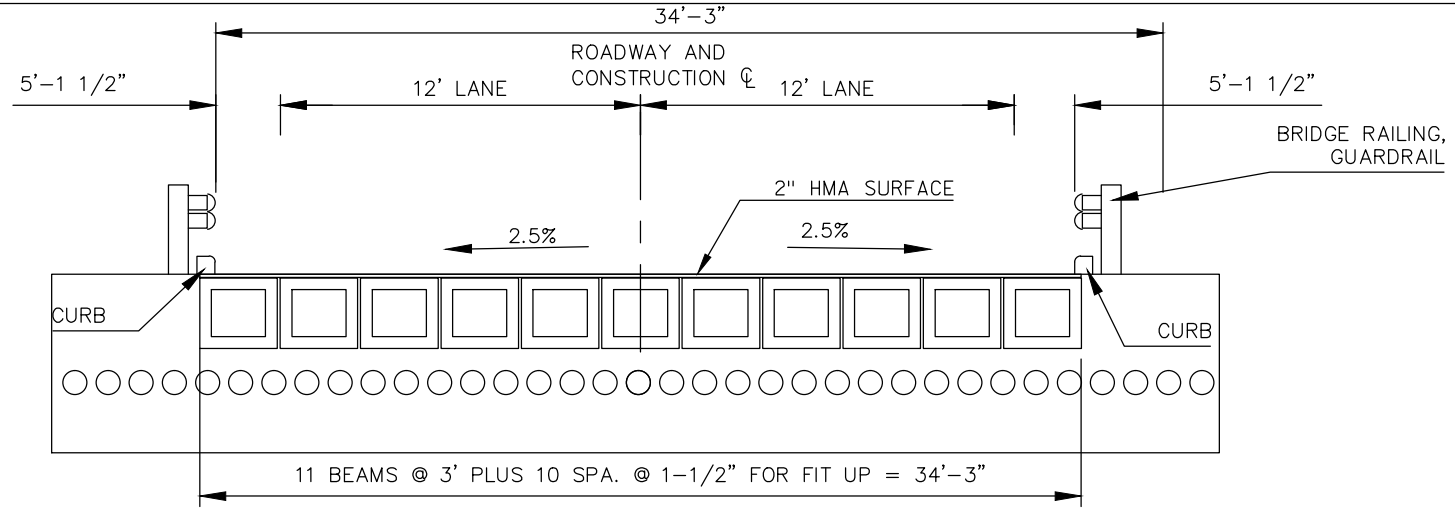

SECTION THRU CULVERT
NO SCALE

COLEMAN ENGINEERING COMPANY
635 CIRCLE DRIVE – IRON MOUNTAIN, MICHIGAN 49801 (906) 774–3440
200 EAST AYER STREET – IRONWOOD, MICHIGAN 49938 (906) 932–5048

BRIDGE D28 - UNNAMED TRIBUTARY TO VOELKERS CREEK NEW BRIDGE
COUNTY ROAD 595 MARQUETTE COUNTY, MICHIGAN

CADD DRAWING 595–STREAM–VOELKERS BRIDGE

DATE: 6/6/12

4BD

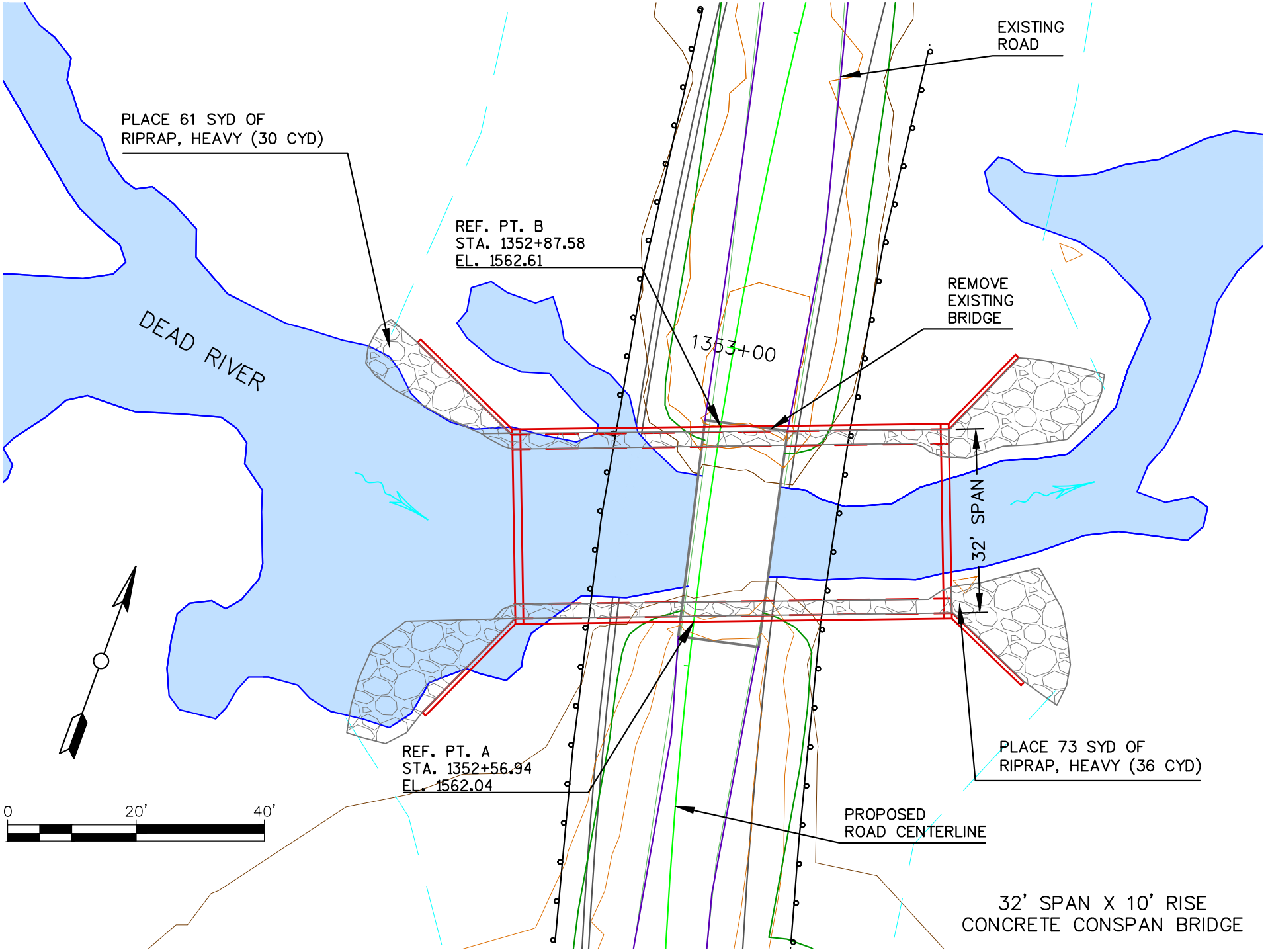

COLEMAN ENGINEERING COMPANY
635 CIRCLE DRIVE – IRON MOUNTAIN, MICHIGAN 49801 (906) 774-3440
200 EAST AYER STREET – IRONWOOD, MICHIGAN 49938 (906) 932-5048

BRIDGE B3 - DEAD RIVER NEW BRIDGE
COUNTY ROAD 595 MARQUETTE COUNTY, MICHIGAN

CADD DRAWING 595 DEADRIVERBRIDGE

DATE: 6/4/12

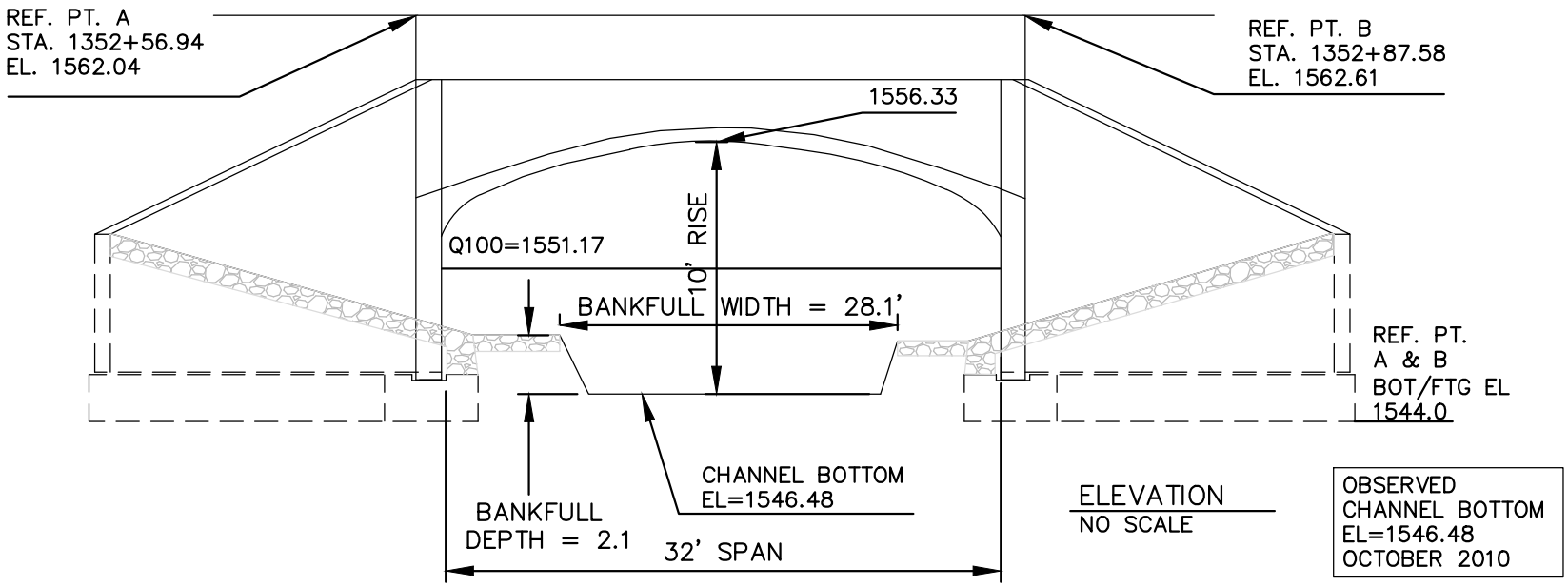

ELEVATION
NO SCALE

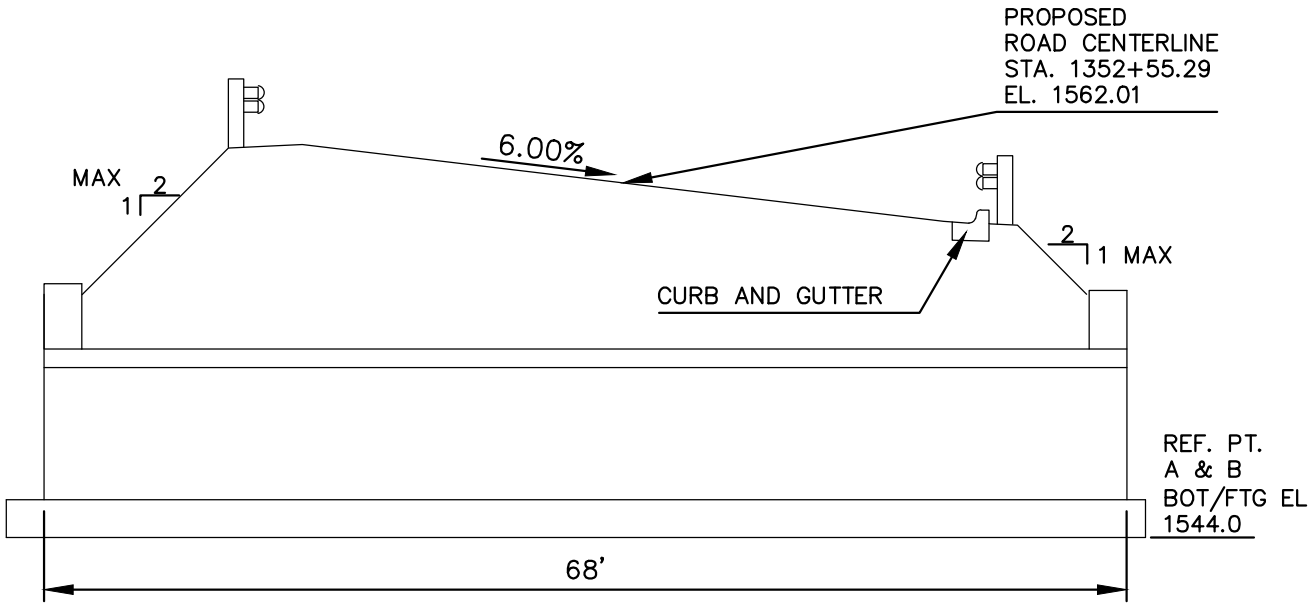

SECTION THRU CULVERT
NO SCALE

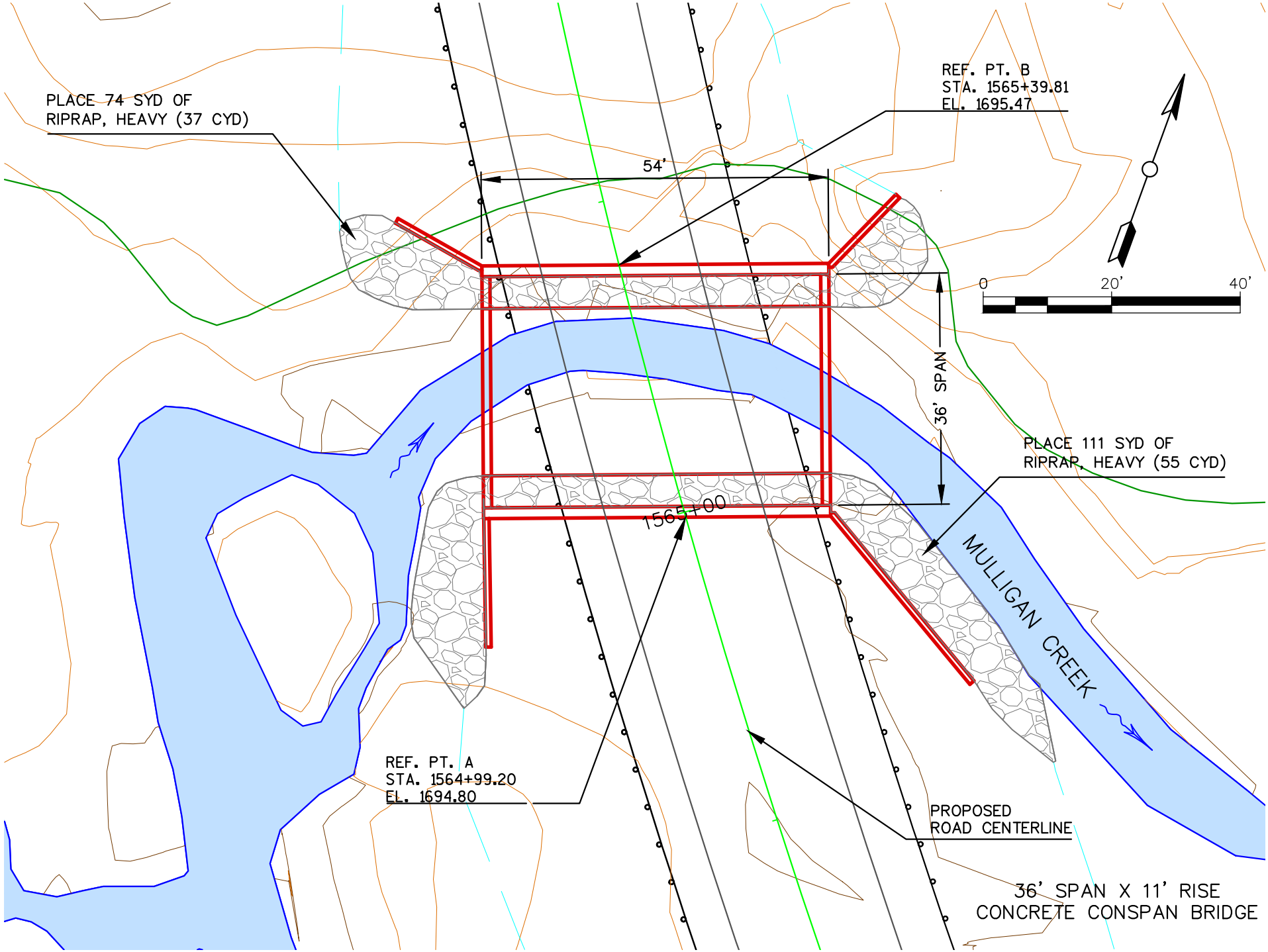

COLEMAN ENGINEERING COMPANY
635 CIRCLE DRIVE – IRON MOUNTAIN, MICHIGAN 49801 (906) 774-3440
200 EAST AYER STREET – IRONWOOD, MICHIGAN 49938 (906) 932-5048

BRIDGE B4 - MULLIGAN CREEK NEW BRIDGE
COUNTY ROAD 595 MARQUETTE COUNTY, MICHIGAN

CADD DRAWING 595 MULLIGANBRIDGE

DATE: 5/29/12

7B

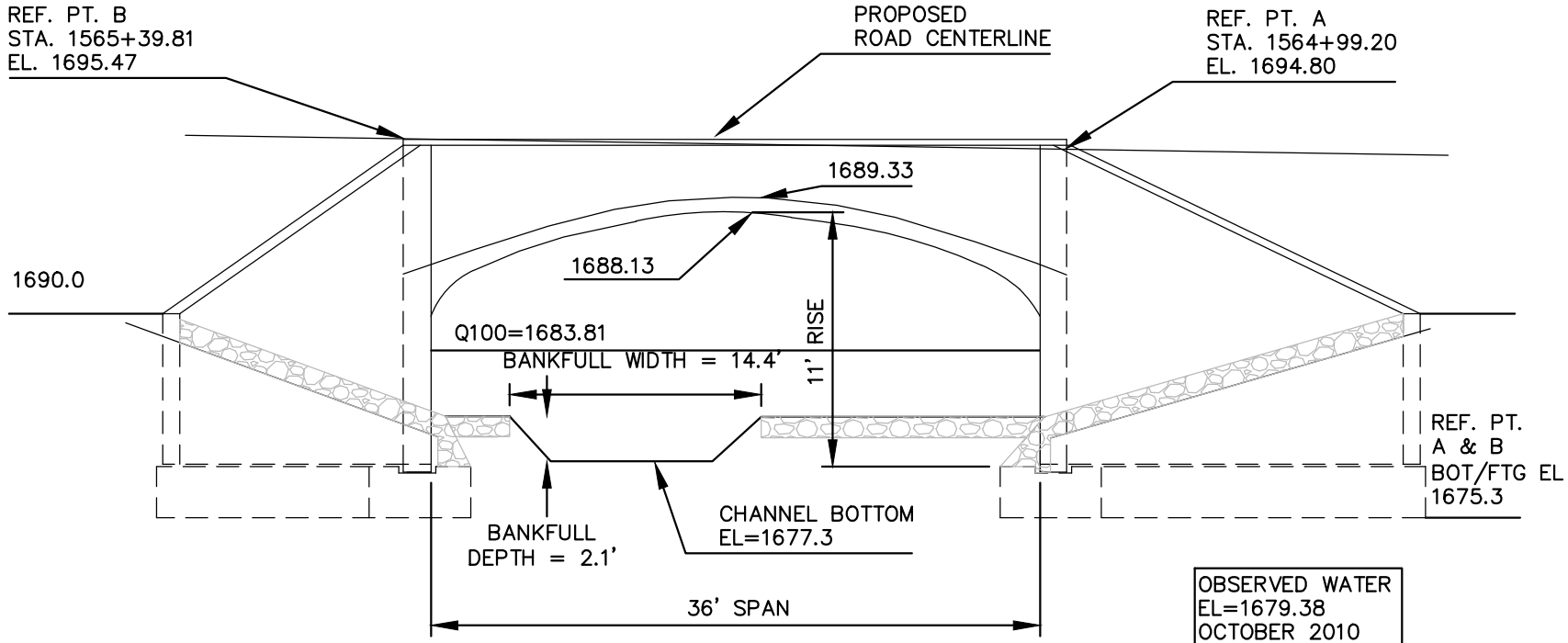

OBSERVED WATER
EL=1679.38
OCTOBER 2010

ELEVATION
NO SCALE

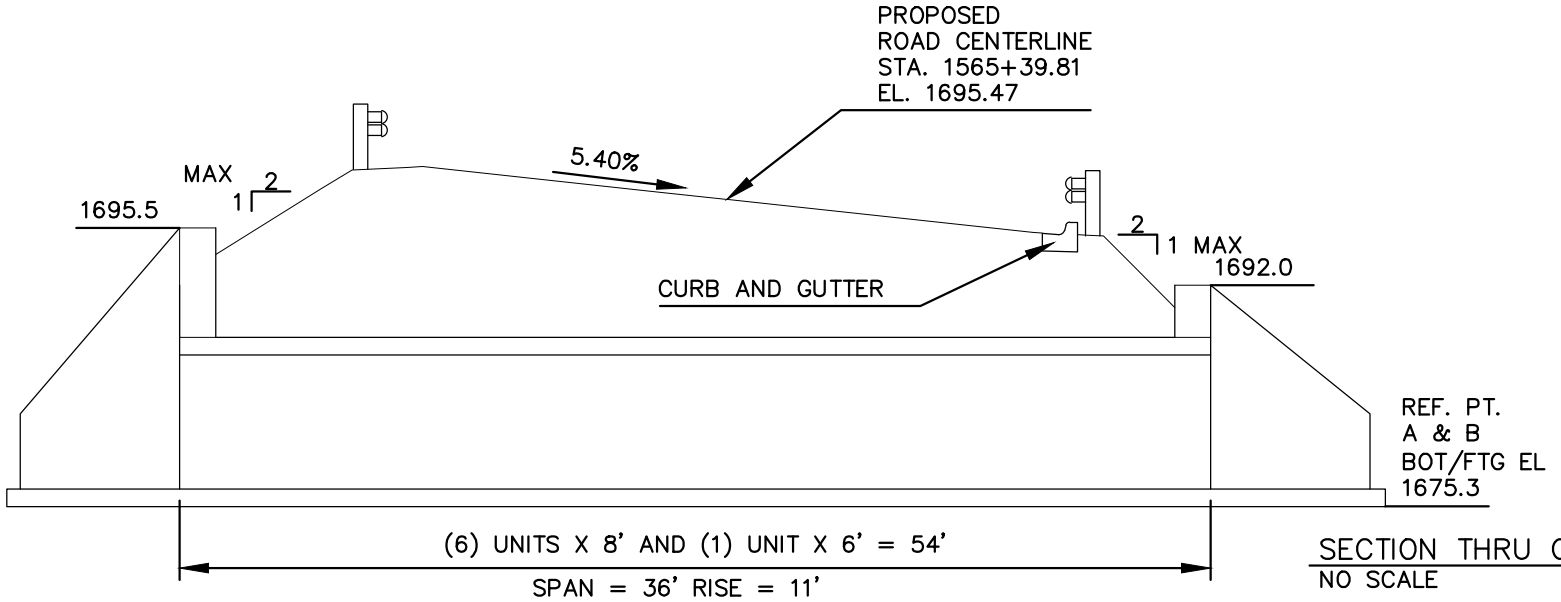

SECTION THRU CULVERT
NO SCALE

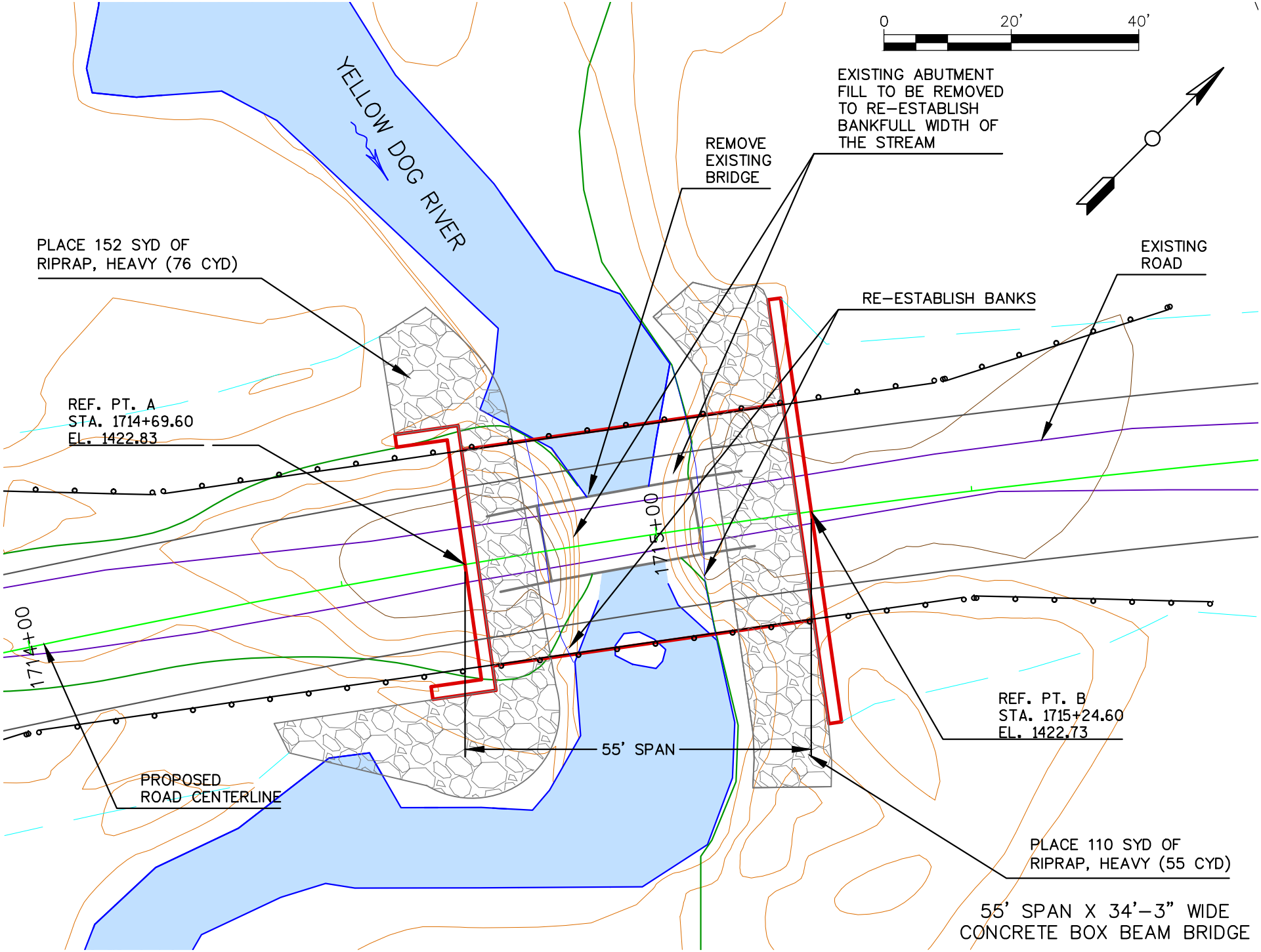

COLEMAN ENGINEERING COMPANY
635 CIRCLE DRIVE – IRON MOUNTAIN, MICHIGAN 49801 (906) 774-3440
200 EAST AYER STREET – IRONWOOD, MICHIGAN 49938 (906) 932-5048

BRIDGE B5 - YELLOW DOG RIVER NEW BRIDGE
COUNTY ROAD 595 MARQUETTE COUNTY, MICHIGAN

CADD DRAWING 595-YELLOWDOGBRIDGE

DATE: 5/29/12

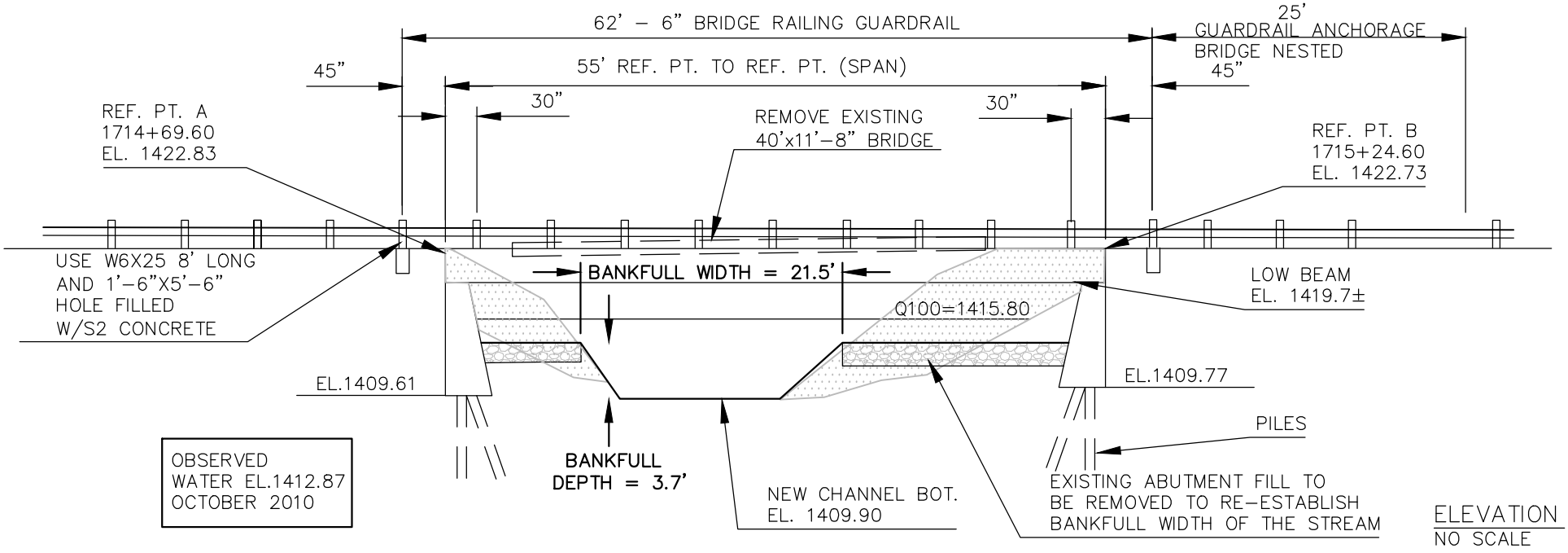

ELEVATION
NO SCALE

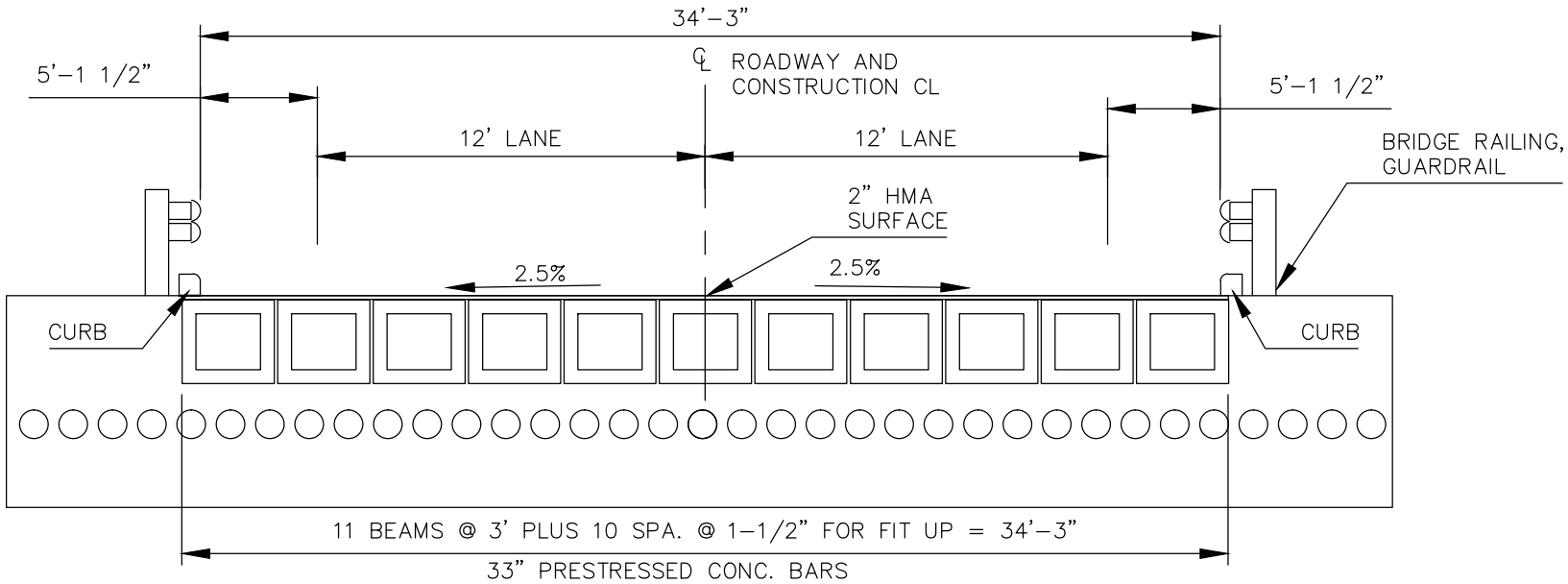

TYPICAL DECK SECTION
NO SCALE

COLEMAN ENGINEERING COMPANY
635 CIRCLE DRIVE – IRON MOUNTAIN, MICHIGAN 49801 (906) 774–3440
200 EAST AYER STREET – IRONWOOD, MICHIGAN 49938 (906) 932–5048

BRIDGE B5 - YELLOW DOG RIVER NEW BRIDGE
COUNTY ROAD 595 MARQUETTE COUNTY, MICHIGAN

CADD DRAWING 595–YELLOWDOGBRIDGE | DATE: 6/5/12 | 10B