Iron and Steel Subsidiary Source Audit
USS Gary Works

Date: 2-7-10
Inspector: SCOTT APATHY

Start Time: 0655
End Time: 17 11

	Monitor Point	Emissions?		Time
1	No. 4 Blast Furnace Top	No ☑	Yes ☐	0655
2	No. 4 Blast Furnace Relief Valve	No ☑	Yes ☐	0700
3	No. 6 Blast Furnace Top	No ☑	Yes ☐	0705
4	No. 6 Blast Furnace Relief Valve	No ☑	Yes ☐	0710
5	No. 8 Blast Furnace Top	No ☑	Yes ☐	0715
6	No. 8 Blast Furnace Relief Valve	No ☑	Yes ☐	0720
7	No. 14 Blast Furnace Top	No ☑	Yes ☐	0725/SD
8	No. 14 Blast Furnace Relief Valve	No ☑	Yes ☐	0730/SD
1	No. 4 Blast Furnace Top	No ☑	Yes ☐	1055
2	No. 4 Blast Furnace Relief Valve	No ☑	Yes ☐	1100
3	No. 6 Blast Furnace Top	No ☑	Yes ☐	1105
4	No. 6 Blast Furnace Relief Valve	No ☑	Yes ☐	1110
5	No. 8 Blast Furnace Top	No ☑	Yes ☐	1115
6	No. 8 Blast Furnace Relief Valve	No ☑	Yes ☐	1120
7	No. 14 Blast Furnace Top	No ☑	Yes ☐	1125/SD
8	No. 14 Blast Furnace Relief Valve	No ☑	Yes ☐	1130/SD
1	No. 4 Blast Furnace Top	No ☑	Yes ☐	1455
2	No. 4 Blast Furnace Relief Valve	No ☑	Yes ☐	1500
3	No. 6 Blast Furnace Top	No ☑	Yes ☐	1505
4	No. 6 Blast Furnace Relief Valve	No ☑	Yes ☐	1510
5	No. 8 Blast Furnace Top	No ☑	Yes ☐	1515
6	No. 8 Blast Furnace Relief Valve	No ☑	Yes ☐	1520
7	No. 14 Blast Furnace Top	No ☑	Yes ☐	1525/SD
8	No. 14 Blast Furnace Relief Valve	No ☑	Yes ☐	1530/SD

Planned Bleeder Event

1	Blast Furnace No._____	No ☐	Yes ☐	
2	Blast Furnace No._____	No ☐	Yes ☐	
3	Blast Furnace No._____	No ☐	Yes ☐	

~9750458.doc

Iron and Steel Subsidiary Source Audit
USS Gary Works

Date: 07/08/10 Start Time: 0654
Inspector: A. RICHARDSON End Time: 1712

	Monitor Point	Emissions?		Time	
1	No. 4 Blast Furnace Top	No ☑	Yes ☐	0654	
2	No. 4 Blast Furnace Relief Valve	No ☑	Yes ☐	0659	
3	No. 6 Blast Furnace Top	No ☑	Yes ☐	0704	
4	No. 6 Blast Furnace Relief Valve	No ☑	Yes ☐	0709	
5	No. 8 Blast Furnace Top	No ☑	Yes ☐	0714	
6	No. 8 Blast Furnace Relief Valve	No ☑	Yes ☐	0719	
7	No. 14 Blast Furnace Top	No ☑	Yes ☐	0724	SD
8	No. 14 Blast Furnace Relief Valve	No ☑	Yes ☐	0729	SD
1	No. 4 Blast Furnace Top	No ☑	Yes ☐	1054	
2	No. 4 Blast Furnace Relief Valve	No ☑	Yes ☐	1059	
3	No. 6 Blast Furnace Top	No ☑	Yes ☐	1104	
4	No. 6 Blast Furnace Relief Valve	No ☑	Yes ☐	1109	
5	No. 8 Blast Furnace Top	No ☑	Yes ☐	1114	
6	No. 8 Blast Furnace Relief Valve	No ☑	Yes ☐	1119	
7	No. 14 Blast Furnace Top	No ☑	Yes ☐	1124	SD
8	No. 14 Blast Furnace Relief Valve	No ☑	Yes ☐	1129	SD
1	No. 4 Blast Furnace Top	No ☑	Yes ☐	1454	
2	No. 4 Blast Furnace Relief Valve	No ☑	Yes ☐	1459	
3	No. 6 Blast Furnace Top	No ☑	Yes ☐	1504	
4	No. 6 Blast Furnace Relief Valve	No ☑	Yes ☐	1509	
5	No. 8 Blast Furnace Top	No ☑	Yes ☐	1514	
6	No. 8 Blast Furnace Relief Valve	No ☑	Yes ☐	1519	
7	No. 14 Blast Furnace Top	No ☑	Yes ☐	1524	SD
8	No. 14 Blast Furnace Relief Valve	No ☑	Yes ☐	1529	SD

Planned Bleeder Event

1	Blast Furnace No._____	No ☐	Yes ☐	
2	Blast Furnace No._____	No ☐	Yes ☐	
3	Blast Furnace No._____	No ☐	Yes ☐	

~9750458.doc

Iron and Steel Subsidiary Source Audit
USS Gary Works

Date: 02/09/10
Inspector: A. RICHARDSON

Start Time: 0652
End Time: 1713

	Monitor Point	Emissions?		Time	
1	No. 4 Blast Furnace Top	No ☑	Yes ☐	0652	
2	No. 4 Blast Furnace Relief Valve	No ☑	Yes ☐	0657	
3	No. 6 Blast Furnace Top	No ☑	Yes ☐	0702	
4	No. 6 Blast Furnace Relief Valve	No ☑	Yes ☐	0707	
5	No. 8 Blast Furnace Top	No ☑	Yes ☐	0712	
6	No. 8 Blast Furnace Relief Valve	No ☑	Yes ☐	0717	
7	No. 14 Blast Furnace Top	No ☑	Yes ☐	0722	SD
8	No. 14 Blast Furnace Relief Valve	No ☑	Yes ☐	0727	SD
1	No. 4 Blast Furnace Top	No ☑	Yes ☐	1052	
2	No. 4 Blast Furnace Relief Valve	No ☑	Yes ☐	1057	
3	No. 6 Blast Furnace Top	No ☑	Yes ☐	1102	
4	No. 6 Blast Furnace Relief Valve	No ☑	Yes ☐	1107	
5	No. 8 Blast Furnace Top	No ☑	Yes ☐	1112	
6	No. 8 Blast Furnace Relief Valve	No ☑	Yes ☐	1117	
7	No. 14 Blast Furnace Top	No ☑	Yes ☐	1122	SD
8	No. 14 Blast Furnace Relief Valve	No ☑	Yes ☐	1127	SD
1	No. 4 Blast Furnace Top	No ☑	Yes ☐	1452	
2	No. 4 Blast Furnace Relief Valve	No ☑	Yes ☐	1457	
3	No. 6 Blast Furnace Top	No ☑	Yes ☐	1502	
4	No. 6 Blast Furnace Relief Valve	No ☑	Yes ☐	1507	
5	No. 8 Blast Furnace Top	No ☑	Yes ☐	1512	
6	No. 8 Blast Furnace Relief Valve	No ☑	Yes ☐	1517	
7	No. 14 Blast Furnace Top	No ☑	Yes ☐	1522	SD
8	No. 14 Blast Furnace Relief Valve	No ☑	Yes ☐	1527	SD

Planned Bleeder Event

1	Blast Furnace No._____	No ☐	Yes ☐	
2	Blast Furnace No._____	No ☐	Yes ☐	
3	Blast Furnace No._____	No ☐	Yes ☐	

~9750458.doc

Iron and Steel Subsidiary Source Audit
USS Gary Works

Date: 02/10/10
Inspector: A. RICHARDSON

Start Time: 0706
End Time: 1715

	Monitor Point	Emissions?		Time	
1	No. 4 Blast Furnace Top	No ☑	Yes ☐	0706	
2	No. 4 Blast Furnace Relief Valve	No ☑	Yes ☐	0711	
3	No. 6 Blast Furnace Top	No ☑	Yes ☐	0716	
4	No. 6 Blast Furnace Relief Valve	No ☑	Yes ☐	0721	
5	No. 8 Blast Furnace Top	No ☑	Yes ☐	0726	
6	No. 8 Blast Furnace Relief Valve	No ☑	Yes ☐	0731	
7	No. 14 Blast Furnace Top	No ☑	Yes ☐	0736	SD
8	No. 14 Blast Furnace Relief Valve	No ☑	Yes ☐	0741	SD
1	No. 4 Blast Furnace Top	No ☑	Yes ☐	1106	
2	No. 4 Blast Furnace Relief Valve	No ☑	Yes ☐	1111	
3	No. 6 Blast Furnace Top	No ☑	Yes ☐	1116	
4	No. 6 Blast Furnace Relief Valve	No ☑	Yes ☐	1121	
5	No. 8 Blast Furnace Top	No ☑	Yes ☐	1126	
6	No. 8 Blast Furnace Relief Valve	No ☑	Yes ☐	1131	
7	No. 14 Blast Furnace Top	No ☑	Yes ☐	1136	SD
8	No. 14 Blast Furnace Relief Valve	No ☑	Yes ☐	1141	SD
1	No. 4 Blast Furnace Top	No ☑	Yes ☐	1506	
2	No. 4 Blast Furnace Relief Valve	No ☑	Yes ☐	1511	
3	No. 6 Blast Furnace Top	No ☑	Yes ☐	1516	
4	No. 6 Blast Furnace Relief Valve	No ☑	Yes ☐	1521	
5	No. 8 Blast Furnace Top	No ☑	Yes ☐	1526	
6	No. 8 Blast Furnace Relief Valve	No ☑	Yes ☐	1531	
7	No. 14 Blast Furnace Top	No ☑	Yes ☐	1536	SD
8	No. 14 Blast Furnace Relief Valve	No ☑	Yes ☐	1541	SD

Planned Bleeder Event

1	Blast Furnace No._____	No ☐	Yes ☐	
2	Blast Furnace No._____	No ☐	Yes ☐	
3	Blast Furnace No._____	No ☐	Yes ☐	

~9750458.doc

Unplanned

OCS Environmental, Inc.
Method 9 VE Inspection Form

Page 1 of 2

			Start	End
Date:	02/10/10			
Source:	8 BLAST FURNACE	Emissions color:	AS NOTED	SAME
Observation Start Time:	0651	Background:	SKY	↓
Observation End Time:	0659:45	Sky Conditions:	OC	↓
Observer's Position:	8 BF1	Wind Speed:	22	↓
Distance to source:	320 YARDS	Wind Direction:	NW	↓
Direction to source:	NW 378°	Ambient Temp:	28°	↓
		Relative Humidity%:	82%	↓
Height of source:	234.6	Wet Bulb Temp:	–	↓
Vertical angle to source:	3°			

Plume Type: (Attached) Detached None

Comments	0	15	30	45			0	15	30	45	Comments
					0	30					
					1	31					
					2	32					
					3	33					
					4	34					
					5	35					
					6	36					
					7	37					
					8	38					
					9	39					
					10	40					
					11	41					
					12	42					
					13	43					
					14	44					
					15	45					
					16	46					
					17	47					
					18	48					
					19	49					
					20	50					
					21	51	0	0	0	0	
					22	52	0	0	0	0	
					23	53	0	0	0	0	
					24	54	0	0	0	0	
					25	55	0	0	0	0	
					26	56	0	0	0	0	
					27	57	0	0	0	0	
					28	58	0	0	0	0	
					29	59	0	0	0	0	

Additional info (include steam dissipation point)

NORTH BLEEDER # 8 FURNACE LEAKING

Observer's Signature

20071107 Method 9 Inspection Form.doc

OCS Environmental, Inc.
Method 9 VE Inspection Form

			Start	End
Date:	02/10/10			
Source:	8 Blast Furnace	Emissions color:	As Noted	Same
Observation Start Time:	07:00	Background:	Sky	
Observation End Time:	07:05:45	Sky Conditions:	OC	
Observer's Position:	8BF1	Wind Speed:	22	
Distance to source:	320 yards	Wind Direction:	NW	
Direction to source:	NW 318°	Ambient Temp:	26°	
		Relative Humidity%:	82%	
Height of source:	234.6	Wet Bulb Temp:	—	
Vertical angle to source:	3°			

Plume Type: (Attached) Detached None

Comments	0	15	30	45			0	15	30	45	Comments
	0	0	0	0	0	30					
	0	0	0	0	1	31					
	0	0	0	0	2	32					
	0	0	0	0	3	33					
	0	0	0	0	4	34					
	0	0	0	0	5	35					
					6	36					
					7	37					
					8	38					
					9	39					
					10	40					
					11	41					
					12	42					
					13	43					
					14	44					
					15	45					
					16	46					
					17	47					
					18	48					
					19	49					
					20	50					
					21	51					
					22	52					
					23	53					
					24	54					
					25	55					
					26	56					
Leaking Bleeder Closed					27	57					
					28	58					
					29	59					

Additional info (include steam dissipation point)

North Bleeder #8 Furnace Leaking

Observer's Signature

Alex Richardson

OCS Environmental, Inc.
Method 9 Source Layout Sketch

Date: 03/10/10

Observer Name: Alex Richardson

Begin Time: 0651 Time End: 0705:45

No Sun Visible Times
0651

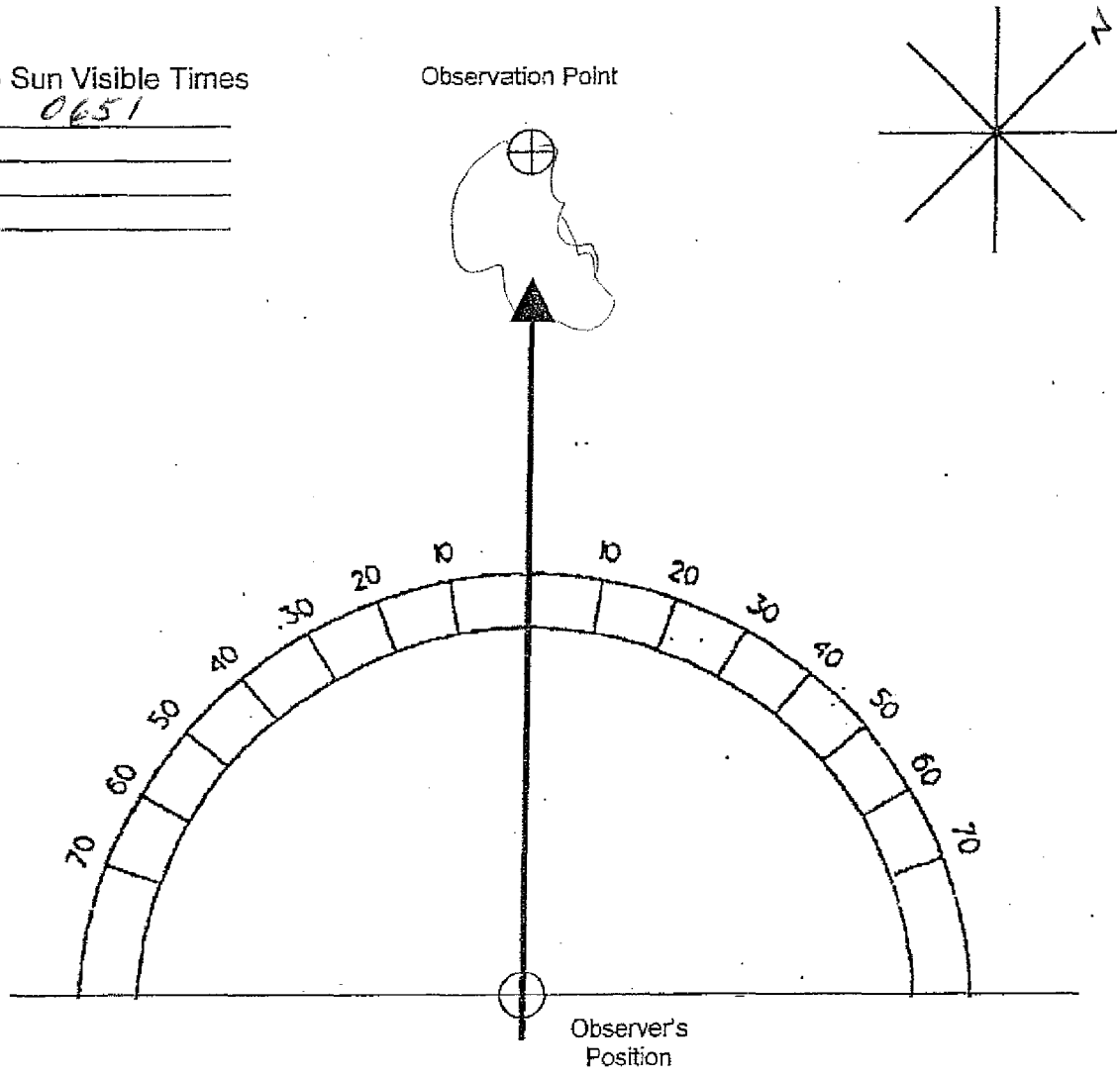

Signature: Alex Richardson

20071107 Method 9 Source Layout Sketch.doc

Iron and Steel Subsidiary Source Audit
USS Gary Works

Date: 2-11-10
Inspector: Scott Apathy

Start Time: 0650
End Time: 1716

	Monitor Point	Emissions?		Time
1	No. 4 Blast Furnace Top	No ☑	Yes ☐	0705
2	No. 4 Blast Furnace Relief Valve	No ☑	Yes ☐	0710
3	No. 6 Blast Furnace Top	No ☑	Yes ☐	0715
4	No. 6 Blast Furnace Relief Valve	No ☑	Yes ☐	0720
5	No. 8 Blast Furnace Top	No ☑	Yes ☐	0725/SD
6	No. 8 Blast Furnace Relief Valve	No ☑	Yes ☐	0730/SD
7	No. 14 Blast Furnace Top	No ☑	Yes ☐	0735/SD
8	No. 14 Blast Furnace Relief Valve	No ☑	Yes ☐	0740/SD
1	No. 4 Blast Furnace Top	No ☑	Yes ☐	1105
2	No. 4 Blast Furnace Relief Valve	No ☑	Yes ☐	1110
3	No. 6 Blast Furnace Top	No ☑	Yes ☐	1115
4	No. 6 Blast Furnace Relief Valve	No ☑	Yes ☐	1120
5	No. 8 Blast Furnace Top	No ☑	Yes ☐	1125/SD
6	No. 8 Blast Furnace Relief Valve	No ☑	Yes ☐	1130/SD
7	No. 14 Blast Furnace Top	No ☑	Yes ☐	1135/SD
8	No. 14 Blast Furnace Relief Valve	No ☑	Yes ☐	1140/SD
1	No. 4 Blast Furnace Top	No ☑	Yes ☐	1505
2	No. 4 Blast Furnace Relief Valve	No ☑	Yes ☐	1510
3	No. 6 Blast Furnace Top	No ☑	Yes ☐	1515
4	No. 6 Blast Furnace Relief Valve	No ☑	Yes ☐	1520
5	No. 8 Blast Furnace Top	No ☑	Yes ☐	1525/SD
6	No. 8 Blast Furnace Relief Valve	No ☑	Yes ☐	1530/SD
7	No. 14 Blast Furnace Top	No ☑	Yes ☐	1535/SD
8	No. 14 Blast Furnace Relief Valve	No ☑	Yes ☐	1540/SD

Planned Bleeder Event

1	Blast Furnace No. 8	No ☑	Yes ☐	1050
2	Blast Furnace No. 8	No ☑	Yes ☐	1450
3	Blast Furnace No.	No ☐	Yes ☐	

BLAST FURNACE #8 still DOWN AT 1716

OCS Environmental, Inc.
Method 9 VE Inspection Form

Page 1 of 2

			Start	End
Date:	2-11-10			
Source:	#8 BF BLEEDER	Emissions color:	AS NOTED	SAME
Observation Start Time:	0650 00	Background:	SKY	
Observation End Time:	0659 45	Sky Conditions:	CL	
Observer's Position:	8BF1	Wind Speed:	5	
Distance to source:	320 YDS	Wind Direction:	W	
Direction to source:	NW	Ambient Temp:	12°	
		Relative Humidity%:	81%	
Height of source:	100'	Wet Bulb Temp:	~	
Vertical angle to source:	10°			

Plume Type: Attached Detached None

Comments	0	15	30	45			0	15	30	45	Comments
					0	30					
					1	31					
					2	32					
					3	33					
					4	34					
					5	35					
					6	36					
					7	37					
					8	38					
					9	39					
					10	40					
					11	41					
					12	42					
					13	43					
					14	44					
					15	45					
					16	46					
					17	47					
					18	48					
					19	49	X	X	X	X	
					20	50	0	0	0	0	PLANNED BLEEDER
					21	51	0	0	0	0	EVENT
					22	52	0	0	0	0	
					23	53	0	0	0	0	
					24	54	0	0	0	0	
					25	55	0	0	0	0	
					26	56	0	0	0	0	
					27	57	0	0	0	0	
					28	58	0	0	0	0	
					29	59	0	0	0	0	

Additional info (include steam dissipation point)

Observer's Signature: Scott Apathy

20071107 Method 9 Inspection Form.doc

OCS Environmental, Inc.
Method 9 VE Inspection Form

			Start	End
Date:	2-11-10			
Source:	#8 BF BLEEDERS	Emissions color:	AS NOTED	SAME
Observation Start Time:	0700 AM	Background:	SKY	
Observation End Time:	0704 AM	Sky Conditions:	CL	
Observer's Position:	13BF1	Wind Speed:	5	
Distance to source:	320 YDS	Wind Direction:	W	
Direction to source:	NW	Ambient Temp:	12°	
		Relative Humidity%:	81%	
Height of source:	100'	Wet Bulb Temp:	~	
Vertical angle to source:	10°			

Plume Type: Attached Detached None

Comments	0	15	30	45			0	15	30	45	Comments
PLANNED BLEEDER	0	0	0	0	0	30					
EVENT (CONT)	0	0	0	0	1	31					
	0	0	0	0	2	32					
	0	0	0	0	3	33					
	0	0	0	0	4	34					
	X	X	X	X	5	35					
					6	36					
					7	37					
					8	38					
					9	39					
					10	40					
					11	41					
					12	42					
					13	43					
					14	44					
					15	45					
					16	46					
					17	47					
					18	48					
					19	49					
					20	50					
					21	51					
					22	52					
					23	53					
					24	54					
					25	55					
					26	56					
					27	57					
					28	58					
					29	59					

Additional info (include steam dissipation point)

Observer's Signature: Scott Spatling

OCS Environmental, Inc.
Method 9 Source Layout Sketch

Date: 2/11/10

Observer Name: SCOTT APATHY

Begin Time: 0650 AM Time End: 0705 AM

No Sun Visible Times
0650

Observation Point
#8 BF BLEEDER

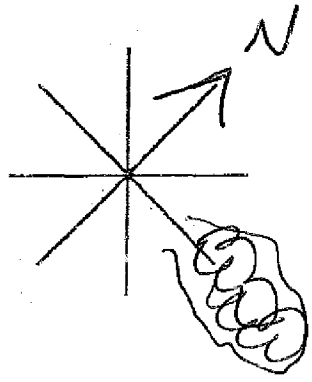

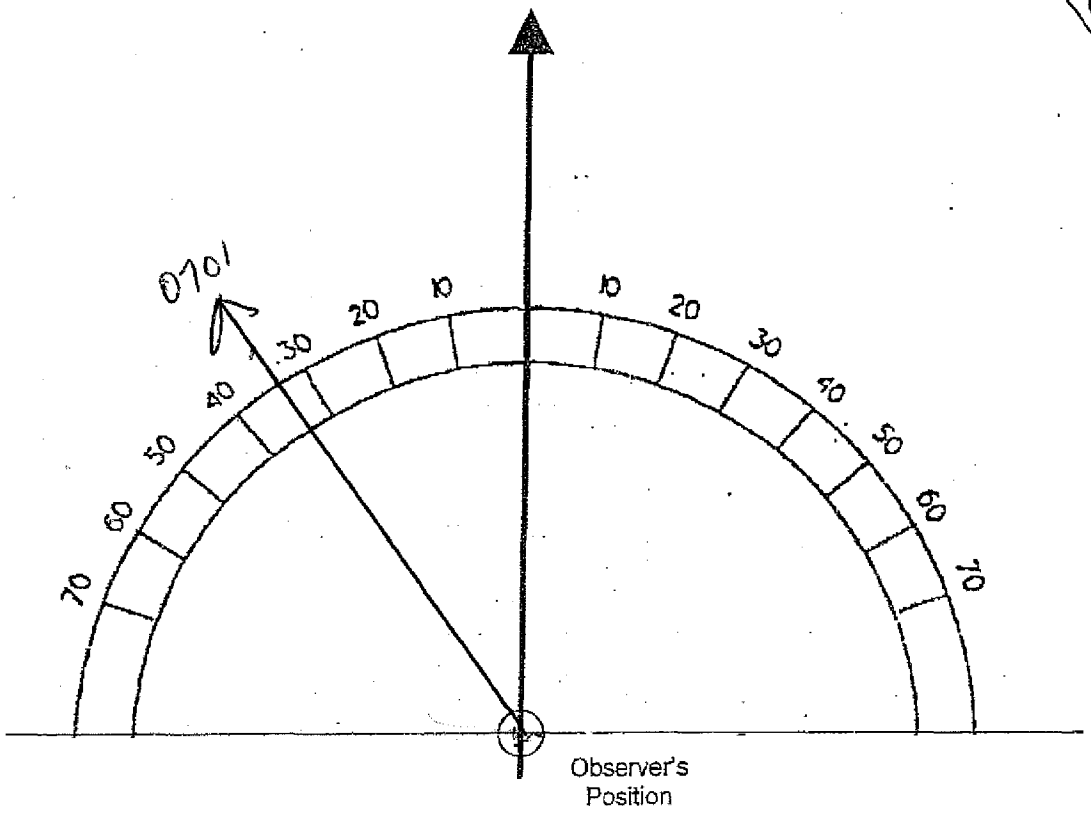

Signature: Scott Apathy

20071107 Method 9 Source Layout Sketch.doc

Iron and Steel Subsidiary Source Audit
USS Gary Works

Date: 2-12-10
Inspector: SCOTT APATHY

Start Time: 0649
End Time: 1719

	Monitor Point	Emissions?		Time
1	No. 4 Blast Furnace Top	No ☑	Yes ☐	0649
2	No. 4 Blast Furnace Relief Valve	No ☑	Yes ☐	0654
3	No. 6 Blast Furnace Top	No ☑	Yes ☐	0659
4	No. 6 Blast Furnace Relief Valve	No ☑	Yes ☐	0704
5	No. 8 Blast Furnace Top	No ☑	Yes ☐	0709
6	No. 8 Blast Furnace Relief Valve	No ☑	Yes ☐	0714
7	No. 14 Blast Furnace Top	No ☑	Yes ☐	0719 |SD
8	No. 14 Blast Furnace Relief Valve	No ☑	Yes ☐	0724 |SD
1	No. 4 Blast Furnace Top	No ☑	Yes ☐	1049
2	No. 4 Blast Furnace Relief Valve	No ☑	Yes ☐	1054
3	No. 6 Blast Furnace Top	No ☑	Yes ☐	1059
4	No. 6 Blast Furnace Relief Valve	No ☑	Yes ☐	1104
5	No. 8 Blast Furnace Top	No ☑	Yes ☐	1109
6	No. 8 Blast Furnace Relief Valve	No ☑	Yes ☐	1114
7	No. 14 Blast Furnace Top	No ☑	Yes ☐	1119 |SD
8	No. 14 Blast Furnace Relief Valve	No ☑	Yes ☐	1124 |SD
1	No. 4 Blast Furnace Top	No ☑	Yes ☐	1449
2	No. 4 Blast Furnace Relief Valve	No ☑	Yes ☐	1454
3	No. 6 Blast Furnace Top	No ☑	Yes ☐	1459
4	No. 6 Blast Furnace Relief Valve	No ☑	Yes ☐	1504
5	No. 8 Blast Furnace Top	No ☑	Yes ☐	1509
6	No. 8 Blast Furnace Relief Valve	No ☑	Yes ☐	1514
7	No. 14 Blast Furnace Top	No ☑	Yes ☐	1519 |SD
8	No. 14 Blast Furnace Relief Valve	No ☑	Yes ☐	1524 |SD

Planned Bleeder Event

1	Blast Furnace No._____	No ☐	Yes ☐	
2	Blast Furnace No._____	No ☐	Yes ☐	
3	Blast Furnace No._____	No ☐	Yes ☐	

~9750458.doc

Iron and Steel Subsidiary Source Audit
USS Gary Works

Date: 2-13-18 Start Time: 0647
Inspector: End Time: 1719

	Monitor Point	Emissions?		Time	
1	No. 4 Blast Furnace Top	No ☒	Yes ☐	0647	
2	No. 4 Blast Furnace Relief Valve	No ☒	Yes ☐	0652	
3	No. 6 Blast Furnace Top	No ☒	Yes ☐	0657	
4	No. 6 Blast Furnace Relief Valve	No ☒	Yes ☐	0702	
5	No. 8 Blast Furnace Top	No ☒	Yes ☐	0707	
6	No. 8 Blast Furnace Relief Valve	No ☒	Yes ☐	0712	
7	No. 14 Blast Furnace Top	No ☒	Yes ☐	0717	SD
8	No. 14 Blast Furnace Relief Valve	No ☒	Yes ☐	0722	SD
1	No. 4 Blast Furnace Top	No ☒	Yes ☐	1046	
2	No. 4 Blast Furnace Relief Valve	No ☒	Yes ☐	1051	
3	No. 6 Blast Furnace Top	No ☒	Yes ☐	1056	
4	No. 6 Blast Furnace Relief Valve	No ☒	Yes ☐	1101	
5	No. 8 Blast Furnace Top	No ☒	Yes ☐	1106	
6	No. 8 Blast Furnace Relief Valve	No ☒	Yes ☐	1111	
7	No. 14 Blast Furnace Top	No ☒	Yes ☐	1116	SD
8	No. 14 Blast Furnace Relief Valve	No ☒	Yes ☐	1121	SD
1	No. 4 Blast Furnace Top	No ☒	Yes ☐	1445	
2	No. 4 Blast Furnace Relief Valve	No ☒	Yes ☐	1450	
3	No. 6 Blast Furnace Top	No ☒	Yes ☐	1455	
4	No. 6 Blast Furnace Relief Valve	No ☒	Yes ☐	1500	
5	No. 8 Blast Furnace Top	No ☒	Yes ☐	1505	
6	No. 8 Blast Furnace Relief Valve	No ☒	Yes ☐	1510	
7	No. 14 Blast Furnace Top	No ☒	Yes ☐	1515	SD
8	No. 14 Blast Furnace Relief Valve	No ☒	Yes ☐	1520	SD

Planned Bleeder Event

1	Blast Furnace No._____	No ☐	Yes ☐	
2	Blast Furnace No._____	No ☐	Yes ☐	
3	Blast Furnace No._____	No ☐	Yes ☐	

~9750458.doc

OCS Environmental, Inc.
Method 9 VE Inspection Form

Page 1 of 1

			Start	End
Date:	2-13-10			
Source:	# 4 Bf - Noxill Bleacher	Emissions color:	As Noted	Same
Observation Start Time:	0920 A	Background:	Blue Sky	
Observation End Time:	0935 A	Sky Conditions:	Pt Cloudy	
Observer's Position:	4 Bf 1	Wind Speed:	6	
Distance to source:	320 yds	Wind Direction:	SW	
Direction to source:	NW 320 °	Ambient Temp:	22° F	
		Relative Humidity%:	80 %	
Height of source:	235' 6" ft	Wet Bulb Temp:	—	
Vertical angle to source:	14 °			

4 Bf - Noxill Bleacher

Plume Type: Attached Detached None

Comments	0	15	30	45			0	15	30	45	Comments
					0	30	0	0	0	0	
					1	31	0	0	0	0	
0920 A					2	32	0	0	0	0	
					3	33	0	0	0	0	
# 4 Bf - Noxill Bleacher					4	34	0	0	0	0	
					5	35					End Obs
Visible emissions					6	36					
					7	37					0935 A
Noxill					8	38					
Bleacher					9	39					2/13/10
					10	40					
Leaking					11	41					
					12	42					
					13	43					
					14	44					
					15	45					
					16	46					
					17	47					
0920 A					18	48					
					19	49					
# 1 Bf N. Bleacher	0	0	0	0	20	50					
	0	0	0	0	21	51					
	0	0	0	0	22	52					
	0	0	0	0	23	53					
	0	0	0	0	24	54					
	0	0	0	0	25	55					
	0	0	0	0	26	56					
	0	0	0	0	27	57					
	0	0	0	0	28	58					
	0	0	0	0	29	59					

Additional Info (include steam dissipation point)

Observer's Signature

20071107 Method 9 Inspection Form.doc

OCS Environmental, Inc.
Method 9 Source Layout Sketch

Date: 2 / 13 / 10

Observer Name: T. SMITH

Begin Time: 0920A Time End: 0935A

4Bf → N. Bleeden

No Sun Visible Times

*
*
*
*

* No Sun Visible N/A

Observation Point

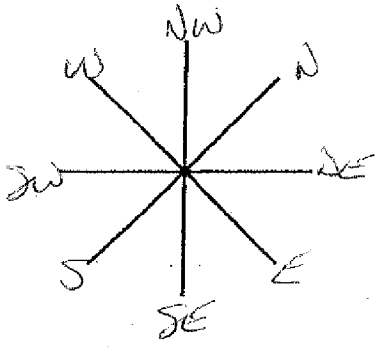

N. Bleeden Contractor
VA Phoenix EVEOT

4Bf

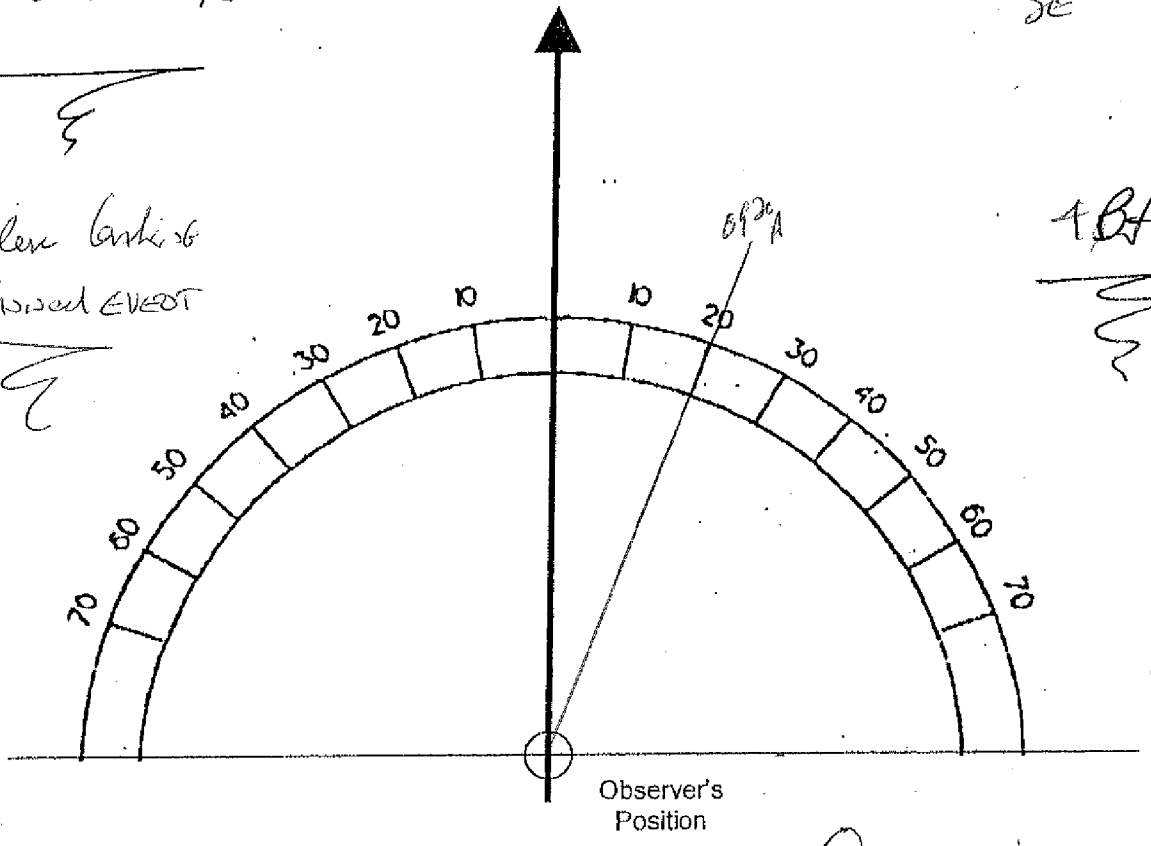

Signature:

20071107 Method 9 Source Layout Sketch.doc