Iron and Steel Subsidiary Source Audit
USS Gary Works

Date: 01-17-10
Inspector: Dan Wolff

Start Time: 07:12
End Time: 16:45

	Monitor Point	Emissions?		Time
1	No. 4 Blast Furnace Top	No ☑	Yes ☐	07:12
2	No. 4 Blast Furnace Relief Valve	No ☑	Yes ☐	07:17
3	No. 6 Blast Furnace Top	No ☑	Yes ☐	07:22
4	No. 6 Blast Furnace Relief Valve	No ☑	Yes ☐	07:27
5	No. 8 Blast Furnace Top	No ☑	Yes ☐	07:32
6	No. 8 Blast Furnace Relief Valve	No ☑	Yes ☐	07:37
7	No. 14 Blast Furnace Top	No ☑	Yes ☐	07:42 SD
8	No. 14 Blast Furnace Relief Valve	No ☑	Yes ☐	07:47 SD
1	No. 4 Blast Furnace Top	No ☑	Yes ☐	11:12
2	No. 4 Blast Furnace Relief Valve	No ☑	Yes ☐	11:17
3	No. 6 Blast Furnace Top	No ☑	Yes ☐	11:22
4	No. 6 Blast Furnace Relief Valve	No ☑	Yes ☐	11:27
5	No. 8 Blast Furnace Top	No ☑	Yes ☐	11:32
6	No. 8 Blast Furnace Relief Valve	No ☑	Yes ☐	11:37
7	No. 14 Blast Furnace Top	No ☑	Yes ☐	11:42 SD
8	No. 14 Blast Furnace Relief Valve	No ☑	Yes ☐	11:47 SD
1	No. 4 Blast Furnace Top	No ☑	Yes ☐	15:12
2	No. 4 Blast Furnace Relief Valve	No ☑	Yes ☐	15:17
3	No. 6 Blast Furnace Top	No ☑	Yes ☐	15:22
4	No. 6 Blast Furnace Relief Valve	No ☑	Yes ☐	15:27
5	No. 8 Blast Furnace Top	No ☑	Yes ☐	15:32
6	No. 8 Blast Furnace Relief Valve	No ☑	Yes ☐	15:37
7	No. 14 Blast Furnace Top	No ☑	Yes ☐	15:42 SD
8	No. 14 Blast Furnace Relief Valve	No ☑	Yes ☐	15:47

Planned Bleeder Event

1	Blast Furnace No._____	No ☐	Yes ☐	
2	Blast Furnace No._____	No ☐	Yes ☐	
3	Blast Furnace No._____	No ☐	Yes ☐	

~9750458.doc

Iron and Steel Subsidiary Source Audit
USS Gary Works

Date: 1-18-10
Inspector: J. Johnson

Start Time: 0712 00
End Time: 1645 43

	Monitor Point	Emissions?		Time	
1	No. 4 Blast Furnace Top	No ☑	Yes ☐	0712	
2	No. 4 Blast Furnace Relief Valve	No ☑	Yes ☐	0717	
3	No. 6 Blast Furnace Top	No ☑	Yes ☐	0722	
4	No. 6 Blast Furnace Relief Valve	No ☑	Yes ☐	0727	
5	No. 8 Blast Furnace Top	No ☑	Yes ☐	0732	
6	No. 8 Blast Furnace Relief Valve	No ☑	Yes ☐	0737	
7	No. 14 Blast Furnace Top	No ☑	Yes ☐	0742	SD
8	No. 14 Blast Furnace Relief Valve	No ☑	Yes ☐	0747	SD
1	No. 4 Blast Furnace Top	No ☑	Yes ☐	1112	
2	No. 4 Blast Furnace Relief Valve	No ☑	Yes ☐	1117	
3	No. 6 Blast Furnace Top	No ☑	Yes ☐	1122	
4	No. 6 Blast Furnace Relief Valve	No ☑	Yes ☐	1127	
5	No. 8 Blast Furnace Top	No ☑	Yes ☐	1132	
6	No. 8 Blast Furnace Relief Valve	No ☑	Yes ☐	1137	
7	No. 14 Blast Furnace Top	No ☑	Yes ☐	1142	SD
8	No. 14 Blast Furnace Relief Valve	No ☑	Yes ☐	1147	SD
1	No. 4 Blast Furnace Top	No ☑	Yes ☐	1512	
2	No. 4 Blast Furnace Relief Valve	No ☑	Yes ☐	1517	
3	No. 6 Blast Furnace Top	No ☑	Yes ☐	1522	
4	No. 6 Blast Furnace Relief Valve	No ☑	Yes ☐	1527	
5	No. 8 Blast Furnace Top	No ☑	Yes ☐	1532	
6	No. 8 Blast Furnace Relief Valve	No ☑	Yes ☐	1537	
7	No. 14 Blast Furnace Top	No ☑	Yes ☐	1542	SD
8	No. 14 Blast Furnace Relief Valve	No ☑	Yes ☐	1547	SD

Planned Bleeder Event

1	Blast Furnace No._____	No ☐	Yes ☐	
2	Blast Furnace No._____	No ☐	Yes ☐	
3	Blast Furnace No._____	No ☐	Yes ☐	

J. Johnson

* SD- SYSTEM DOWN

~9750458.doc

Iron and Steel Subsidiary Source Audit
USS Gary Works

Date: 1/19/10
Inspector: A. RICHARDSON

Start Time: 0711
End Time: 1647

	Monitor Point	Emissions?		Time	
1	No. 4 Blast Furnace Top	No ☑	Yes ☐	0711	
2	No. 4 Blast Furnace Relief Valve	No ☑	Yes ☐	0716	
3	No. 6 Blast Furnace Top	No ☑	Yes ☐	0721	
4	No. 6 Blast Furnace Relief Valve	No ☑	Yes ☐	0726	
5	No. 8 Blast Furnace Top	No ☑	Yes ☐	0731	
6	No. 8 Blast Furnace Relief Valve	No ☑	Yes ☐	0736	
7	No. 14 Blast Furnace Top	No ☑	Yes ☐	0741	SD
8	No. 14 Blast Furnace Relief Valve	No ☑	Yes ☐	0746	SD
1	No. 4 Blast Furnace Top	No ☑	Yes ☐	1111	
2	No. 4 Blast Furnace Relief Valve	No ☑	Yes ☐	1116	
3	No. 6 Blast Furnace Top	No ☑	Yes ☐	1121	
4	No. 6 Blast Furnace Relief Valve	No ☑	Yes ☐	1126	
5	No. 8 Blast Furnace Top	No ☑	Yes ☐	1131	SD
6	No. 8 Blast Furnace Relief Valve	No ☑	Yes ☐	1136	SD
7	No. 14 Blast Furnace Top	No ☑	Yes ☐	1141	SD
8	No. 14 Blast Furnace Relief Valve	No ☑	Yes ☐	1146	SD
1	No. 4 Blast Furnace Top	No ☑	Yes ☐	1511	
2	No. 4 Blast Furnace Relief Valve	No ☑	Yes ☐	1516	
3	No. 6 Blast Furnace Top	No ☑	Yes ☐	1521	
4	No. 6 Blast Furnace Relief Valve	No ☑	Yes ☐	1526	
5	No. 8 Blast Furnace Top	No ☑	Yes ☐	1531	
6	No. 8 Blast Furnace Relief Valve	No ☑	Yes ☐	1536	
7	No. 14 Blast Furnace Top	No ☑	Yes ☐	1541	SD
8	No. 14 Blast Furnace Relief Valve	No ☑	Yes ☐	1546	SD

Planned Bleeder Event

1	Blast Furnace No. 8	No ☑	Yes ☐	1421	SD
2	Blast Furnace No.	No ☐	Yes ☐		
3	Blast Furnace No.	No ☐	Yes ☐		

~9750458.doc

OCS Environmental, Inc.
Method 9 VE Inspection Form

Page 1 of 1

			Start	End
Date:	1/19/10			
Source:	8 BLAST FURNACE	Emissions color:	AS NOTED	SAME
Observation Start Time:	10:21	Background:	SKY	
Observation End Time:	10:35:45	Sky Conditions:	0 C	
Observer's Position:	8 BFI	Wind Speed:	2	
Distance to source:	320 YDS	Wind Direction:	SW	
Direction to source:	NW 318° FROM MAGNETIC NORTH	Ambient Temp:	27°	
		Relative Humidity%:	84%	
Height of source:	234'6"	Wet Bulb Temp:	–	
Vertical angle to source:	14°			

Plume Type: (Attached) Detached None

Comments	0	15	30	45			0	15	30	45	Comments
					0	30	0	0	0	0	
					1	31	0	0	0	0	
					2	32	0	0	0	0	
					3	33	0	0	0	0	
					4	34	0	0	0	0	
					5	35	0	0	0	0	
					6	36					
					7	37					
					8	38					
					9	39					
					10	40					
					11	41					
					12	42					
					13	43					
					14	44					
					15	45					
					16	46					
PLANED BLEEDER OPENING					17	47					
					18	48					
					19	49					
					20	50					
BLACK	40	25	20	0	21	51					
	0	0	0	0	22	52					
	0	0	0	0	23	53					
	0	0	0	0	24	54					
	0	0	0	0	25	55					
	0	0	0	0	26	56					
	0	0	0	0	27	57					
	0	0	0	0	28	58					
	0	0	0	0	29	59					

Additional info (include steam dissipation point)

Observer's Signature: Alex Richardson

20071107 Method 9 Inspection Form.doc

OCS Environmental, Inc.
Method 9 Source Layout Sketch

Date: 01/19/10

Observer Name: A. RICHARDSON

Begin Time: 10:21 Time End: 10:35:45

No Sun Visible Times
10:21

Observation Point

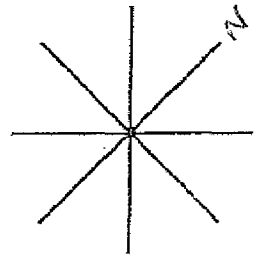

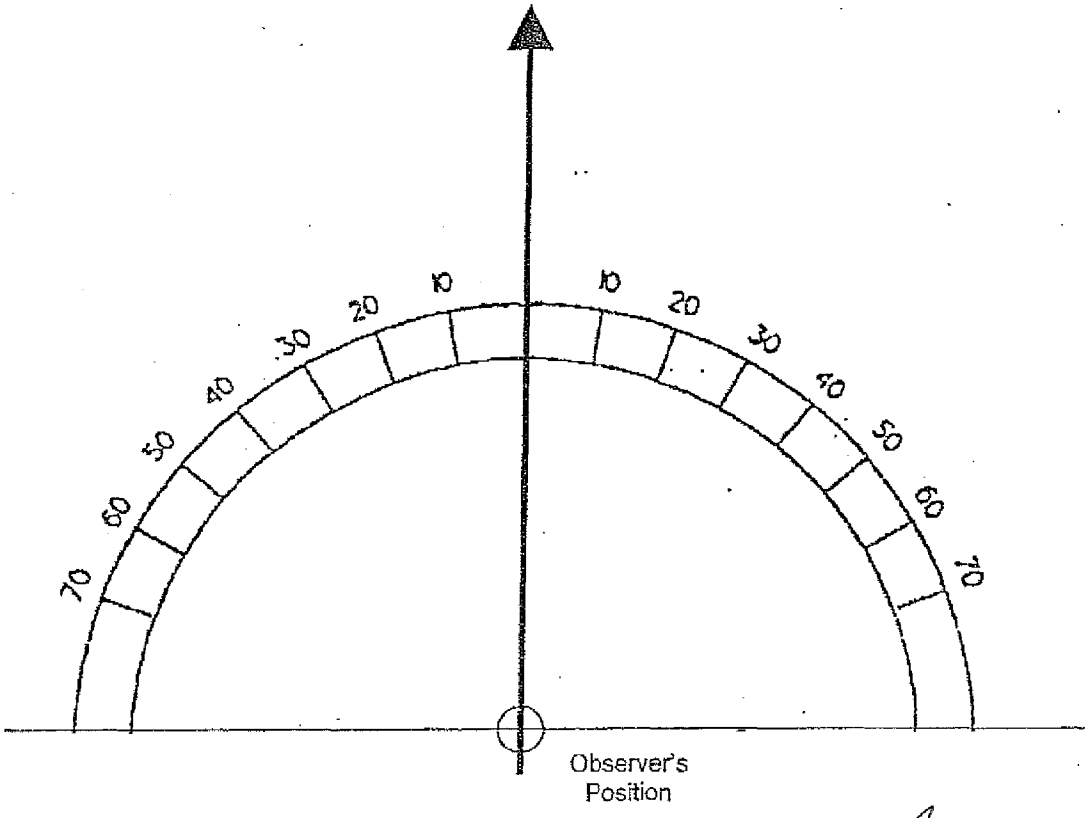

Signature: Alex Richardson

20071107 Method 9 Source Layout Sketch.doc

Iron and Steel Subsidiary Source Audit
USS Gary Works

Date: 1-20-10
Inspector: J Johnson

Start Time: 0711 00
End Time: 1648 00

	Monitor Point	Emissions?		Time	
1	No. 4 Blast Furnace Top	No ☑	Yes ☐	0711	
2	No. 4 Blast Furnace Relief Valve	No ☑	Yes ☐	0716	
3	No. 6 Blast Furnace Top	No ☑	Yes ☐	0721	
4	No. 6 Blast Furnace Relief Valve	No ☑	Yes ☐	0726	
5	No. 8 Blast Furnace Top	No ☑	Yes ☐	0731	
6	No. 8 Blast Furnace Relief Valve	No ☑	Yes ☐	0736	
7	No. 14 Blast Furnace Top	No ☑	Yes ☐	0741	SD
8	No. 14 Blast Furnace Relief Valve	No ☑	Yes ☐	0746	SD
1	No. 4 Blast Furnace Top	No ☑	Yes ☐	1111	
2	No. 4 Blast Furnace Relief Valve	No ☑	Yes ☐	1116	
3	No. 6 Blast Furnace Top	No ☑	Yes ☐	1121	
4	No. 6 Blast Furnace Relief Valve	No ☑	Yes ☐	1126	
5	No. 8 Blast Furnace Top	No ☑	Yes ☐	1131	
6	No. 8 Blast Furnace Relief Valve	No ☑	Yes ☐	1136	
7	No. 14 Blast Furnace Top	No ☑	Yes ☐	1141	SD
8	No. 14 Blast Furnace Relief Valve	No ☑	Yes ☐	1146	SD
1	No. 4 Blast Furnace Top	No ☑	Yes ☐	1511	
2	No. 4 Blast Furnace Relief Valve	No ☑	Yes ☐	1516	
3	No. 6 Blast Furnace Top	No ☑	Yes ☐	1521	
4	No. 6 Blast Furnace Relief Valve	No ☑	Yes ☐	1526	
5	No. 8 Blast Furnace Top	No ☑	Yes ☐	1531	
6	No. 8 Blast Furnace Relief Valve	No ☑	Yes ☐	1536	
7	No. 14 Blast Furnace Top	No ☑	Yes ☐	1541	SD
8	No. 14 Blast Furnace Relief Valve	No ☑	Yes ☐	1546	SD

Planned Bleeder Event

1	Blast Furnace No._____	No ☐	Yes ☐	
2	Blast Furnace No._____	No ☐	Yes ☐	
3	Blast Furnace No._____	No ☐	Yes ☐	

SD - SYSTEM DOWN

J. Johnson

~9750458.doc

OCS Environmental, Inc.
Method 9 VE Inspection Form

Date: 1-20-18
Source: # 8 BF
Observation Start Time: 1154:00
Observation End Time: 1159:45
Observer's Position: 8BF1
Distance to source: 315
Direction to source: NW

Height of source: 59'
Vertical angle to source: 30°

	Start	End
Emissions color:	AS NOTED	SAME
Background:	SKY	✓
Sky Conditions:	OC	✓
Wind Speed:	10-15	✓
Wind Direction:	SE	✓
Ambient Temp:	30°	✓
Relative Humidity%:	77%	✓
Wet Bulb Temp:		

Plume Type: (Attached) Detached None

Comments	0	15	30	45			0	15	30	45	Comments
					0	30					
					1	31					
					2	32					
					3	33					
					4	34					
					5	35					
					6	36					
					7	37					
					8	38					
					9	39					
					10	40					
					11	41					
					12	42					
					13	43					
					14	44					
					15	45					
					16	46					
					17	47					
					18	48					
					19	49					
					20	50					
					21	51					
					22	52					
					23	53					
					24	54	0	0	0	0	
					25	55	0	0	0	0	
					26	56	0	0	0	0	
					27	57	0	0	0	0	
					28	58	0	0	0	0	
					29	59	0	0	0	0	

Additional info (include steam dissipation point)

Observer's Signature: J Johnson

OCS Environmental, Inc.
Method 9 VE Inspection Form

Date: 1-20-10
Source: #8 BF
Observation Start Time: 1200 00
Observation End Time: 1208 43
Observer's Position: 8BF1
Distance to source: 315
Direction to source: NW

Height of source: 59°
Vertical angle to source: 3°

	Start	End
Emissions color:	AS NOTED	SAME
Background:	SKY	
Sky Conditions:	OC	
Wind Speed:	10-15	
Wind Direction:	SE	
Ambient Temp:	30°	
Relative Humidity%:	77%	
Wet Bulb Temp:		

Plume Type: (Attached) Detached None

Comments	0	15	30	45			0	15	30	45	Comments
	0	0	0	0	0	30					
	0	0	0	0	1	31					
	0	0	0	0	2	32					
	0	0	0	0	3	33					
	0	0	0	0	4	34					
	0	0	0	0	5	35					
	0	0	0	0	6	36					
	0	0	0	0	7	37					
	0	0	0	0	8	38					
					9	39					
					10	40					
					11	41					
					12	42					
					13	43					
					14	44					
					15	45					
					16	46					
					17	47					
					18	48					
					19	49					
					20	50					
					21	51					
					22	52					
					23	53					
					24	54					
					25	55					
					26	56					
					27	57					
					28	58					
					29	59					

Additional Info (include steam dissipation point)

Observer's Signature: J. Johnson

20071107 Method 9 Inspection Form.doc

OCS Environmental, Inc.
Method 9 Source Layout Sketch

Date: 1/1/2010

Observer Name: J. Johnson

Begin Time: 1154 00 Time End: 1208 45

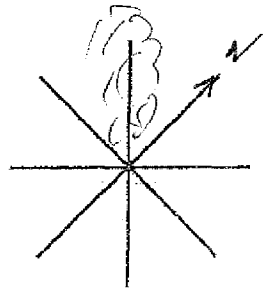

No Sun Visible Times

1154 00
1208 45

Observation Point

BLEEDERS

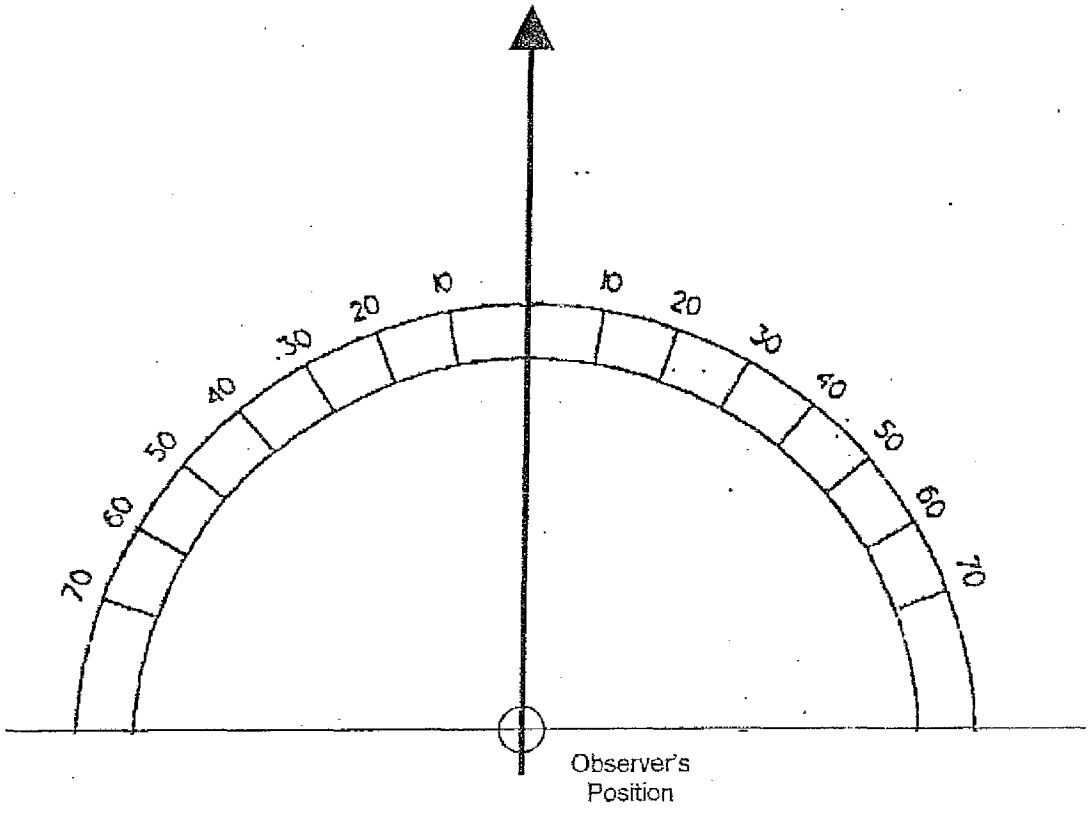

Signature: J Johnson

20071107 Method 9 Source Layout Sketch.doc

Iron and Steel Subsidiary Source Audit
USS Gary Works

Date: 01-21-10 Start Time: 07:10
Inspector: [illegible]/ALEX RICHARDSON End Time: 16:50

	Monitor Point	Emissions?		Time
1	No. 4 Blast Furnace Top	No ☑	Yes ☐	07:25 SD
2	No. 4 Blast Furnace Relief Valve	No ☑	Yes ☐	07:30 SD
3	No. 6 Blast Furnace Top	No ☑	Yes ☐	07:35
4	No. 6 Blast Furnace Relief Valve	No ☑	Yes ☐	07:40
5	No. 8 Blast Furnace Top	No ☑	Yes ☐	07:45
6	No. 8 Blast Furnace Relief Valve	No ☑	Yes ☐	07:50
7	No. 14 Blast Furnace Top	No ☑	Yes ☐	07:55 SD
8	No. 14 Blast Furnace Relief Valve	No ☑	Yes ☐	08:00 SD
1	No. 4 Blast Furnace Top	No ☑	Yes ☐	11:15 SD
2	No. 4 Blast Furnace Relief Valve	No ☑	Yes ☐	11:20 SD
3	No. 6 Blast Furnace Top	No ☑	Yes ☐	11:25
4	No. 6 Blast Furnace Relief Valve	No ☑	Yes ☐	11:30
5	No. 8 Blast Furnace Top	No ☑	Yes ☐	11:35
6	No. 8 Blast Furnace Relief Valve	No ☑	Yes ☐	11:40
7	No. 14 Blast Furnace Top	No ☑	Yes ☐	11:45 SD
8	No. 14 Blast Furnace Relief Valve	No ☑	Yes ☐	11:50 SD
1	No. 4 Blast Furnace Top	No ☑	Yes ☐	15:16 SD
2	No. 4 Blast Furnace Relief Valve	No ☑	Yes ☐	15:20 SD
3	No. 6 Blast Furnace Top	No ☑	Yes ☐	15:25
4	No. 6 Blast Furnace Relief Valve	No ☑	Yes ☐	15:30
5	No. 8 Blast Furnace Top	No ☑	Yes ☐	15:35
6	No. 8 Blast Furnace Relief Valve	No ☑	Yes ☐	15:40
7	No. 14 Blast Furnace Top	No ☑	Yes ☐	15:45 SD
8	No. 14 Blast Furnace Relief Valve	No ☑	Yes ☐	15:50 SD

Planned Bleeder Event

1	Blast Furnace No. 4	No ☑	Yes ☐	11:10 SD
2	Blast Furnace No. 4	No ☑	Yes ☐	15:10 SD
3	Blast Furnace No.	No ☐	Yes ☐	

~9750458.doc

PLANNED #4 BF BLEEDER EVENT IN PROGRESS

OCS

OCS Environmental, Inc.
Method 9 VE Inspection Form

Page 1 of 1

			Start	End
Date:	01-21-10	Emissions color:	AS NOTED	SAME
Source:	#4 BF	Background:	SKY	
Observation Start Time:	07:10	Sky Conditions:	OVERCAST	
Observation End Time:	07:24:45	Wind Speed:	14	
Observer's Position:	4BF 1	Wind Direction:	E	
Distance to source:	320 YRDS	Ambient Temp:	32°	
Direction to source:	NW	Relative Humidity%:	64%	
		Wet Bulb Temp:	—	—
Height of source:	235'			
Vertical angle to source:	14°			

Plume Type: Attached Detached None

Comments	0	15	30	45			0	15	30	45	Comments
					0	30					
					1	31					
					2	32					
					3	33					
					4	34					
					5	35					
					6	36					
					7	37					
					8	38					
					9	39					
	0	0	0	0	10	40					
	0	0	0	0	11	41					
	0	0	0	0	12	42					
	0	0	0	0	13	43					
	0	0	0	0	14	44					
	0	0	0	0	15	45					
	0	0	0	0	16	46					
	0	0	0	0	17	47					
	0	0	0	0	18	48					
	0	0	0	0	19	49					
	0	0	0	0	20	50					
	0	0	0	0	21	51					
	0	0	0	0	22	52					
	0	0	0	0	23	53					
	0	0	0	0	24	54					
					25	55					
					26	56					
					27	57					
					28	58					
					29	59					

Additional info (include steam dissipation point)

Observer's Signature: Doug Wade

20071107 Method 9 Inspection Form.doc

IRON BEACHING EVENT
#151
APP. 10 TONS

OCS Environmental, Inc.
Method 9 VE Inspection Form

Page 1 of 1

			Start	End
Date:	01-21-10	Emissions color:	AS NOTED	Same
Source: Iron Beaching Facility	LADLE #151	Background:	SKY	
Observation Start Time:	07:56	Sky Conditions:	OVERCAST	
Observation End Time:	07:59:45	Wind Speed:	14	
Observer's Position:	NORTH OF SOURCE	Wind Direction:	E	
Distance to source:	230 YARDS	Ambient Temp:	32°	
Direction to source:	S	Relative Humidity%:	64%	
Height of source:	100'	Wet Bulb Temp:		
Vertical angle to source:	8°			

Plume Type: Attached Detached None

Comments	0	15	30	45			0	15	30	45	Comments
					0	30					
					1	31					
					2	32					
					3	33					
					4	34					
					5	35					
					6	36					
					7	37					
					8	38					
					9	39					
					10	40					
					11	41					
					12	42					
					13	43					
					14	44					
					15	45					
					16	46					
					17	47					
					18	48					
					19	49					
					20	50					
					21	51					
					22	52					
					23	53					
					24	54					
					25	55					
					26	56	0	5	5	5	
					27	57	10	10	5	5	
					28	58	10	5	5	5	
					29	59	5	5	5	0	

Additional info (include steam dissipation point)

Observer's Signature

#4 BF
PLANNED BLEEDER EVENT
IS PROGRESS

OCS Environmental, Inc.
Method 9 Source Layout Sketch

Date: 01 / 21 / 10

Observer Name: WALSH

Begin Time: 07:10 Time End: 07:24

No Sun Visible Times
07:10

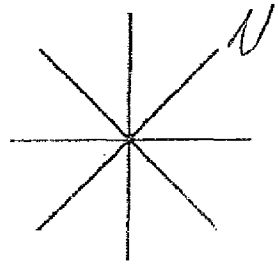

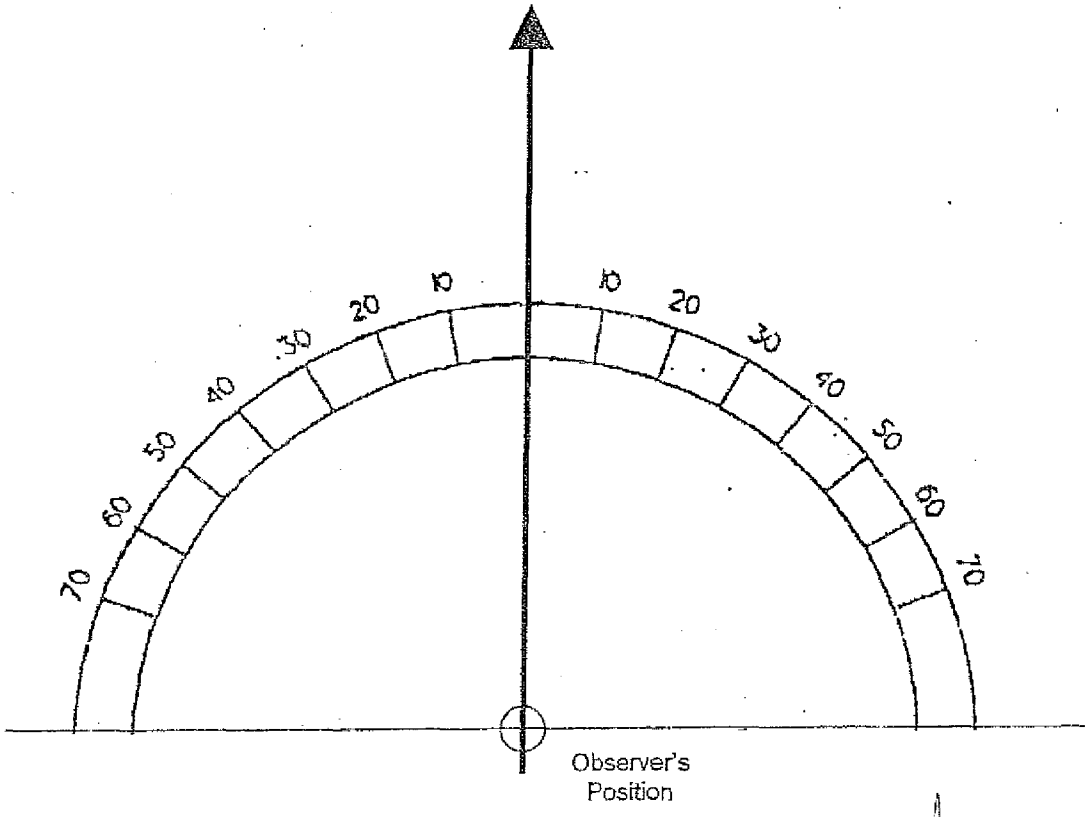

Signature: Doug Walsh

20071107 Method 9 Source Layout Sketch.doc

Iron and Steel Subsidiary Source Audit
USS Gary Works

Date: 01/22/10
Inspector: A. RICHARDSON

Start Time: 0710
End Time: 1651

	Monitor Point	Emissions?		Time	
1	No. 4 Blast Furnace Top	No ☑	Yes ☐	0710	
2	No. 4 Blast Furnace Relief Valve	No ☑	Yes ☐	0715	
3	No. 6 Blast Furnace Top	No ☑	Yes ☐	0720	
4	No. 6 Blast Furnace Relief Valve	No ☑	Yes ☐	0725	
5	No. 8 Blast Furnace Top	No ☑	Yes ☐	0730	
6	No. 8 Blast Furnace Relief Valve	No ☑	Yes ☐	0735	
7	No. 14 Blast Furnace Top	No ☑	Yes ☐	0740	SD
8	No. 14 Blast Furnace Relief Valve	No ☑	Yes ☐	0745	SD
1	No. 4 Blast Furnace Top	No ☑	Yes ☐	1110	
2	No. 4 Blast Furnace Relief Valve	No ☑	Yes ☐	1115	
3	No. 6 Blast Furnace Top	No ☑	Yes ☐	1120	
4	No. 6 Blast Furnace Relief Valve	No ☑	Yes ☐	1125	
5	No. 8 Blast Furnace Top	No ☑	Yes ☐	1130	
6	No. 8 Blast Furnace Relief Valve	No ☑	Yes ☐	1135	
7	No. 14 Blast Furnace Top	No ☑	Yes ☐	1140	SD
8	No. 14 Blast Furnace Relief Valve	No ☑	Yes ☐	1145	SD
1	No. 4 Blast Furnace Top	No ☑	Yes ☐	1510	
2	No. 4 Blast Furnace Relief Valve	No ☑	Yes ☐	1515	
3	No. 6 Blast Furnace Top	No ☑	Yes ☐	1520	
4	No. 6 Blast Furnace Relief Valve	No ☑	Yes ☐	1525	
5	No. 8 Blast Furnace Top	No ☑	Yes ☐	1530	
6	No. 8 Blast Furnace Relief Valve	No ☑	Yes ☐	1535	
7	No. 14 Blast Furnace Top	No ☑	Yes ☐	1540	SD
8	No. 14 Blast Furnace Relief Valve	No ☑	Yes ☐	1545	SD

Planned Bleeder Event

1	Blast Furnace No._____	No ☐	Yes ☐	
2	Blast Furnace No._____	No ☐	Yes ☐	
3	Blast Furnace No._____	No ☐	Yes ☐	

~9750458.doc

Iron and Steel Subsidiary Source Audit
USS Gary Works

Date: 1-23-10
Inspector:

Start Time: 0704
End Time: 1655

	Monitor Point	Emissions?		Time	
1	No. 4 Blast Furnace Top	No ☒	Yes ☐	0704	
2	No. 4 Blast Furnace Relief Valve	No ☒	Yes ☐	0714	
3	No. 6 Blast Furnace Top	No ☒	Yes ☐	0719	
4	No. 6 Blast Furnace Relief Valve	No ☒	Yes ☐	0724	
5	No. 8 Blast Furnace Top	No ☒	Yes ☐	0729	
6	No. 8 Blast Furnace Relief Valve	No ☒	Yes ☐	0734	
7	No. 14 Blast Furnace Top	No ☒	Yes ☐	0739	SD
8	No. 14 Blast Furnace Relief Valve	No ☒	Yes ☐	0744	SD
1	No. 4 Blast Furnace Top	No ☒	Yes ☐	1108	
2	No. 4 Blast Furnace Relief Valve	No ☒	Yes ☐	1113	
3	No. 6 Blast Furnace Top	No ☒	Yes ☐	1118	
4	No. 6 Blast Furnace Relief Valve	No ☒	Yes ☐	1123	
5	No. 8 Blast Furnace Top	No ☒	Yes ☐	1128	
6	No. 8 Blast Furnace Relief Valve	No ☒	Yes ☐	1133	
7	No. 14 Blast Furnace Top	No ☒	Yes ☐	1138	SD
8	No. 14 Blast Furnace Relief Valve	No ☒	Yes ☐	1143	SD
1	No. 4 Blast Furnace Top	No ☒	Yes ☐	1507	
2	No. 4 Blast Furnace Relief Valve	No ☒	Yes ☐	1512	
3	No. 6 Blast Furnace Top	No ☒	Yes ☐	1517	
4	No. 6 Blast Furnace Relief Valve	No ☒	Yes ☐	1522	
5	No. 8 Blast Furnace Top	No ☒	Yes ☐	1527	
6	No. 8 Blast Furnace Relief Valve	No ☒	Yes ☐	1532	
7	No. 14 Blast Furnace Top	No ☒	Yes ☐	1537	SD
8	No. 14 Blast Furnace Relief Valve	No ☒	Yes ☐	1542	SD

Planned Bleeder Event

1	Blast Furnace No._____	No ☐	Yes ☐	
2	Blast Furnace No._____	No ☐	Yes ☐	
3	Blast Furnace No._____	No ☐	Yes ☐	

~9750458.doc