13

16-1

U.S. Steel Gary Works
Summary of Section 114 Request, Item 13
Nos. 4 and 8 Blast Furnaces Partial Enclosures

Week	Date	Blast Furnace No.	Source	Observation No	Tap Hole Times	
					Open	Close
1	11/19/2007	8	Partial Enclosure	1	9:19 AM	10:41 AM
				2	11:38 AM	1:53 PM
	11/20/2007	4	Partial Enclosure	1	8:40 AM	10:36 AM
				2	11:12 AM	12:46 PM
	11/21/2007	4	Partial Enclosure	1	7:19 AM	9:05 AM
				2	9:40 AM	12:20 PM
		8	Partial Enclosure	1	9:15 AM	11:11 AM
				2	12:14 PM	1:50 PM
2	11/26/2007	4	Partial Enclosure	1	7:09 AM	8:45 AM
				2	9:32 AM	11:13 AM
	11/27/2007	8	Partial Enclosure	1	8.48 AM	11:00 AM
				2	11:33 AM	1:20 PM
	11/28/2007	8	Partial Enclosure	1	10:28 AM	11:39 AM
				2	12:18 PM	2:10 PM
	11/29/2007	4	Partial Enclosure	1	11:16 AM	12:59 PM
				2	1:35 PM	2:46 PM

Section 114 Request VEOs

	BOP		QBOP			4BF			8BF				
Date	Gas Cleaner Stacks	Roof Monitor	Gas Cleaner Stacks	Roof Monitor	Slag Skimming	Casthouse Roof Monitor	Tilt Spout	Tops	Casthouse Roof Monitor	Casthouse Openings	Tops	Baghouses	Visible Emissions Notations
11/09/2007			R	R							R	R	R
11/10/2007												R	R
11/11/2007								R				R	R
11/12/2007	R	R				R			R		R	R	R
11/13/2007			R	R				R	R			R	R
11/14/2007	R	R				R					R	R	R
11/15/2007			R	R				R				R	R
11/16/2007	R	R										R	R
11/17/2007											R	R	R
11/18/2007												R	R
11/19/2007	X	X	X	X					R	X	R	R	R
11/20/2007	X	X	X	X	X	R	X	R	R			R	R
11/21/2007	R	R				R	X			X		R	R
11/22/2007											R	R	R
11/23/2007												R	R
11/24/2007								R				R	R
11/25/2007											R	R	R
11/26/2007			X	X		R	X	R				R	R
11/27/2007	X	X							R	X	R	R	R
11/28/2007	X	X							R	X	R	R	R
11/29/2007			X	X	X	R	X	R				R	R
11/30/2007	R	R										R	R
12/01/2007												R	R
12/02/2007								R				R	R
12/03/2007	R	R										R	R
12/04/2007			R	R		R		R				R	R
12/05/2007	R	R				R						R	R
12/06/2007	R	R							R		R	R	R
12/07/2007			R	R				R	R			R	R
12/08/2007												R	R

R - Routine Observations
X - Section 114 Additional VEOs

16-2

U.S. Steel Gary Works
Summary of Section 114 Request, Item 13
BOP Gas Cleaner Stacks and Roof Monitor
QBOP Gas Cleaner Stacks and Roof Monitor

Week	Date	Source	Observation No	Scrap Charge Time	Tap Time
1	11/19/2007	BOP Gas Cleaner Stacks	1	9:59 AM	10:39 AM
			2	10:56 AM	11:37 AM
		BOP Roof Monitor	1	9:59 AM	10:39 AM
			2	10:56 AM	11:37 AM
		QBOP Gas Cleaner Stacks	1	7:06 AM	7:34 AM
			2	7:49 AM	8:30 AM
		QBOP Roof Monitor	1	7:06 AM	7:34 AM
			2	7:49 AM	8:30 AM
	11/20/2007	BOP Gas Cleaner Stacks	1	7:30 AM	8:22 AM
			2	8:15 AM	8:58 AM
		BOP Roof Monitor	1	7:30 AM	8:22 AM
			2	8:15 AM	8:58 AM
		QBOP Gas Cleaner Stacks	1	9:50 AM	10:19 AM
			2	11:09 AM	11:38 AM
		QBOP Roof Monitor	1	9:50 AM	10:19 AM
			2	11:09 AM	11:38 AM
			2	11:09 AM	11:38 AM
		QBOP Slag Skimming	1	11:50 AM	11:54 AM
			2	12:19 PM	12:22 PM
			3	1:23 PM	1:26 PM
			4	3:09 PM	3:12 PM
2	11/26/2007	QBOP Gas Cleaner Stacks	1	8:08 AM	8:36 AM
			2	8:53 AM	9:44 AM
		QBOP Roof Monitor	1	8:08 AM	8:36 AM
			2	8:53 AM	9:44 AM
	11/27/2007	BOP Gas Cleaner Stacks	1	6:50 AM	7:56 AM
			2	8:10 AM	9:09 AM
		BOP Roof Monitor	1	6:50 AM	7:56 AM
			2	8:10 AM	9:09 AM
	11/28/2007	BOP Gas Cleaner Stacks	1	7:21 AM	8:41 AM
			2	8:54 AM	9:25 AM
		BOP Roof Monitor	1	7:21 AM	8:41 AM
			2	8:54 AM	9:25 AM
	11/29/2007	QBOP Gas Cleaner Stacks	1	7:03 AM	7:36 AM
			2	7:52 AM	8:26 AM
		QBOP Roof Monitor	1	7:03 AM	7:36 AM
			2	7:52 AM	8:26 AM
		QBOP Slag Skimming	1	7:45 AM	7:52 AM
			2	8:33 AM	8:48 AM
			3	9:58 AM	10:09 AM
			4	10:56 AM	11:02 AM

5-1

Iron and Steel Subsidiary Source Audit
USS Gary Works

Date: 11/20/07
Inspector: A. RICHARDSON

Start Time: 0636
End Time: 1230

	Monitor Point	Condition		Time
1	**No. 14 Blast Furnace Casthouse Baghouse Stack**	Normal ☒	Abnormal ☐	0855
2	No. 14 Blast Furnace Stockhouse	Normal ☒	Abnormal ☐	0920
3	No. 14 Blast Furnace Stoves Stack	Normal ☒	Abnormal ☐	1205
4	No. 14 Blast Furnace Top	Normal ☒	Abnormal ☐	1210
5	No. 4 Blast Furnace Stoves Stack	Normal ☒	Abnormal ☐	1157
6	No. 4 Blast Furnace Top	Normal ☒	Abnormal ☐	1159
7	No. 6 Blast Furnace Stoves Stack	Normal ☒	Abnormal ☐	SD
8	No. 6 Blast Furnace Top	Normal ☒	Abnormal ☐	SD
9	No. 8 Blast Furnace Stoves Stack	Normal ☒	Abnormal ☐	1140
10	No. 8 Blast Furnace Top	Normal ☒	Abnormal ☐	1146
11	Process Vessel Maintenance Facility	Normal ☒	Abnormal ☐	1215
12	Sinter Plant Cooling Stack 1	Normal ☒	Abnormal ☐	1040
13	Sinter Plant Cooling Stack 3	Normal ☒	Abnormal ☐	1042
14	**Sinter Plant Discharge Area Baghouse Stack 1**	Normal ☒	Abnormal ☐	1050
15	**Sinter Plant Discharge Area Baghouse Stack 3**	Normal ☒	Abnormal ☐	1052
16	Sinter Plant S1-S2 Conveyor Baghouse Stack	Normal ☒	Abnormal ☐	1106
17	Sinter Plant Sinter Screening Station Baghouse Stack	Normal ☒	Abnormal ☐	1108
18	Sinter Plant Storage Bins Building Baghouse Stack	Normal ☒	Abnormal ☐	1110
19	**Sinter Plant Windbox Stack 1 (North)**	Normal ☒	Abnormal ☐	1130
20	**Sinter Plant Windbox Stack 2 (South)**	Normal ☒	Abnormal ☐	1132
21	TBBH No. 4A Boiler	Normal ☒	Abnormal ☐	0830
22	**No. 1 BOP CASBell/OB Lancing Station Baghouse Stacks**	Normal ☒	Abnormal ☐	0635
23	No. 1 BOP Iron Desulfurization Building Fugitive Emissions	Normal ☒	Abnormal ☐	0630
24	**No. 1 BOP Desulfurization Baghouse Stacks**	Normal ☒	Abnormal ☐	0640
25	No. 1 BOP Flux Handling System Baghouse No. 3 Vent	Normal ☒	Abnormal ☐	0645
26	No. 2 QBOP 116' Flux Handling System Baghouse Stack (North)	Normal ☒	Abnormal ☐	0718
27	No. 2 QBOP 116' Flux Handling System Baghouse Stack (South)	Normal ☒	Abnormal ☐	0715
28	No. 2 QBOP 166' Flux Handling System Baghouse (Center)	Normal ☒	Abnormal ☐	0722
29	No. 2 QBOP 166' Flux Handling System Baghouse (North)	Normal ☒	Abnormal ☐	0720
30	No. 2 QBOP 166' Flux Handling System Baghouse (South)	Normal ☒	Abnormal ☐	0724
31	No. 2 QBOP Day Tank Lime Silo Baghouse Stack	Normal ☒	Abnormal ☐	0700
32	**No. 2 QBOP Desulfurization Baghouse Stacks**	Normal ☒	Abnormal ☐	0930
33	**No. 2 QBOP LMF No. 1 Baghouse Stacks**	Normal ☒	Abnormal ☐	0800
34	**No. 2 QBOP LMF No. 2 Baghouse Stacks**	Normal ☒	Abnormal ☐	0750
35	**No. 2 QBOP LMF No. 3 Baghouse Stacks**	Normal ☒	Abnormal ☐	0755
36	No. 2 QBOP Lime Dumping Station Baghouse Stack	Normal ☒	Abnormal ☐	0655
37	**No. 2 Q-BOP RH Vacuum Degasser Baghouse Stacks**	Normal ☒	Abnormal ☐	0803
38	**No. 2 Q-BOP PM10 Baghouse Stack**	Normal ☒	Abnormal ☐	0935

If the facility is not operating, put the time and SD (for source down) in the Time column.

Circle only the monitoring points below in bold that **you did not check** for any abnormal and visual conditions **while in operation**.

1 14 15 19 20 22 24 32 33 34 35 37 38

1 = 2

Iron and Steel Subsidiary Source Audit
USS Gary Works

Date: 11-24-07
Inspector: C. KREBS

Start Time: 0635
End Time: 1150

	Monitor Point	Condition		Time
1	**No. 14 Blast Furnace Casthouse Baghouse Stack**	Normal ☑	Abnormal ☐	0820
2	No. 14 Blast Furnace Stockhouse	Normal ☑	Abnormal ☐	0844
3	No. 14 Blast Furnace Stoves Stack	Normal ☑	Abnormal ☐	1120
4	No. 14 Blast Furnace Top	Normal ☑	Abnormal ☐	
5	No. 4 Blast Furnace Stoves Stack	Normal ☑	Abnormal ☐	
6	No. 4 Blast Furnace Top	Normal ☑	Abnormal ☐	
7	No. 6 Blast Furnace Stoves Stack	Normal ☑	Abnormal ☐	SD 160
8	No. 6 Blast Furnace Top	Normal ☑	Abnormal ☐	SD
9	No. 8 Blast Furnace Stoves Stack	Normal ☑	Abnormal ☐	
10	No. 8 Blast Furnace Top	Normal ☑	Abnormal ☐	
11	Process Vessel Maintenance Facility	Normal ☑	Abnormal ☐	0924
12	Sinter Plant Cooling Stack 1	Normal ☑	Abnormal ☐	1017
13	Sinter Plant Cooling Stack 3	Normal ☑	Abnormal ☐	1022
14	**Sinter Plant Discharge Area Baghouse Stack 1**	Normal ☑	Abnormal ☐	1028
15	**Sinter Plant Discharge Area Baghouse Stack 3**	Normal ☑	Abnormal ☐	1033
16	Sinter Plant S1-S2 Conveyor Baghouse Stack	Normal ☑	Abnormal ☐	1039
17	Sinter Plant Sinter Screening Station Baghouse Stack	Normal ☑	Abnormal ☐	1043
18	Sinter Plant Storage Bins Building Baghouse Stack	Normal ☑	Abnormal ☐	1047
19	**Sinter Plant Windbox Stack 1 (North)**	Normal ☑	Abnormal ☐	1115
20	**Sinter Plant Windbox Stack 2 (South)**	Normal ☑	Abnormal ☐	1117
21	TBBH No. 4A Boiler	Normal ☑	Abnormal ☐	0927
22	**No. 1 BOP CASBell/OB Lancing Station Baghouse Stacks**	Normal ☑	Abnormal ☐	0950
23	No. 1 BOP Iron Desulfurization Building Fugitive Emissions	Normal ☑	Abnormal ☐	0944
24	**No. 1 BOP Desulfurization Baghouse Stacks**	Normal ☑	Abnormal ☐	0940
25	No. 1 BOP Flux Handling System Baghouse No. 3 Vent	Normal ☑	Abnormal ☐	0957
26	No. 2 QBOP 116' Flux Handling System Baghouse Stack (North)	Normal ☑	Abnormal ☐	0711
27	No. 2 QBOP 116' Flux Handling System Baghouse Stack (South)	Normal ☑	Abnormal ☐	0715
28	No. 2 QBOP 166' Flux Handling System Baghouse (Center)	Normal ☑	Abnormal ☐	0724
29	No. 2 QBOP 166' Flux Handling System Baghouse (North)	Normal ☑	Abnormal ☐	0730
30	No. 2 QBOP 166' Flux Handling System Baghouse (South)	Normal ☑	Abnormal ☐	0720
31	No. 2 QBOP Day Tank Lime Silo Baghouse Stack	Normal ☑	Abnormal ☐	0640
32	**No. 2 QBOP Desulfurization Baghouse Stacks**	Normal ☑	Abnormal ☐	0829
33	**No. 2 QBOP LMF No. 1 Baghouse Stacks**	Normal ☑	Abnormal ☐	0747
34	**No. 2 QBOP LMF No. 2 Baghouse Stacks**	Normal ☑	Abnormal ☐	0752
35	**No. 2 QBOP LMF No. 3 Baghouse Stacks**	Normal ☑	Abnormal ☐	0757
36	No. 2 QBOP Lime Dumping Station Baghouse Stack	Normal ☑	Abnormal ☐	0635
37	**No. 2 Q-BOP RH Vacuum Degasser Baghouse Stacks**	Normal ☑	Abnormal ☐	0808
38	**No. 2 Q-BOP PM10 Baghouse Stack**	Normal ☑	Abnormal ☐	0812

If the facility is not operating, put the time and SD (for source down) in the Time column.

Circle only the monitoring points below in bold that **you did not check** for any abnormal and visual conditions **while in operation**.

1 14 15 19 20 22 24 32 33 34 35 37 38

6-3

Iron and Steel Subsidiary Source Audit
USS Gary Works

Date: 12-8-07
Inspector: Chet Dunlin

Start Time: 07:00
End Time: 13:20

	Monitor Point	Condition		Time
1	**No. 14 Blast Furnace Casthouse Baghouse Stack**	Normal ☑	Abnormal ☐	08:47
2	No. 14 Blast Furnace Stockhouse	Normal ☑	Abnormal ☐	08:57
3	No. 14 Blast Furnace Stoves Stack	Normal ☑	Abnormal ☐	12:00
4	No. 14 Blast Furnace Top	Normal ☑	Abnormal ☐	12:04
5	No. 4 Blast Furnace Stoves Stack	Normal ☑	Abnormal ☐	12:16
6	No. 4 Blast Furnace Top	Normal ☑	Abnormal ☐	12:20
7	No. 6 Blast Furnace Stoves Stack	Normal ☑	Abnormal ☐	SD
8	No. 6 Blast Furnace Top	Normal ☑	Abnormal ☐	SD
9	No. 8 Blast Furnace Stoves Stack	Normal ☑	Abnormal ☐	12:08
10	No. 8 Blast Furnace Top	Normal ☑	Abnormal ☐	12:12
11	Process Vessel Maintenance Facility	Normal ☑	Abnormal ☐	12:24
12	Sinter Plant Cooling Stack 1	Normal ☑	Abnormal ☐	12:45
13	Sinter Plant Cooling Stack 3	Normal ☑	Abnormal ☐	12:32
14	**Sinter Plant Discharge Area Baghouse Stack 1**	Normal ☑	Abnormal ☐	12:36
15	**Sinter Plant Discharge Area Baghouse Stack 3**	Normal ☑	Abnormal ☐	12:40
16	Sinter Plant S1-S2 Conveyor Baghouse Stack	Normal ☑	Abnormal ☐	12:50
17	Sinter Plant Sinter Screening Station Baghouse Stack	Normal ☑	Abnormal ☐	12:54
18	Sinter Plant Storage Bins Building Baghouse Stack	Normal ☑	Abnormal ☐	12:58
19	**Sinter Plant Windbox Stack 1 (North)**	Normal ☑	Abnormal ☐	13:10
20	**Sinter Plant Windbox Stack 2 (South)**	Normal ☑	Abnormal ☐	13:15
21	TBBH No. 4A Boiler	Normal ☑	Abnormal ☐	08:30
22	**No. 1 BOP CASBell/OB Lancing Station Baghouse Stacks**	Normal ☑	Abnormal ☐	09:17
23	No. 1 BOP Iron Desulfurization Building Fugitive Emissions	Normal ☑	Abnormal ☐	09:29
24	**No. 1 BOP Desulfurization Baghouse Stacks**	Normal ☑	Abnormal ☐	09:25
25	No. 1 BOP Flux Handling System Baghouse No. 3 Vent	Normal ☑	Abnormal ☐	09:21
26	No. 2 QBOP 116' Flux Handling System Baghouse Stack (North)	Normal ☑	Abnormal ☐	07:05
27	No. 2 QBOP 116' Flux Handling System Baghouse Stack (South)	Normal ☑	Abnormal ☐	07:00
28	No. 2 QBOP 166' Flux Handling System Baghouse (Center)	Normal ☑	Abnormal ☐	07:20
29	No. 2 QBOP 166' Flux Handling System Baghouse (North)	Normal ☑	Abnormal ☐	07:25
30	No. 2 QBOP 166' Flux Handling System Baghouse (South)	Normal ☑	Abnormal ☐	07:15
31	No. 2 QBOP Day Tank Lime Silo Baghouse Stack	Normal ☑	Abnormal ☐	07:40
32	**No. 2 QBOP Desulfurization Baghouse Stacks**	Normal ☑	Abnormal ☐	09:01
33	**No. 2 QBOP LMF No. 1 Baghouse Stacks**	Normal ☑	Abnormal ☐	08:15
34	**No. 2 QBOP LMF No. 2 Baghouse Stacks**	Normal ☑	Abnormal ☐	07:45
35	**No. 2 QBOP LMF No. 3 Baghouse Stacks**	Normal ☑	Abnormal ☐	07:50
36	No. 2 QBOP Lime Dumping Station Baghouse Stack	Normal ☑	Abnormal ☐	07:55
37	**No. 2 Q-BOP RH Vacuum Degasser Baghouse Stacks**	Normal ☑	Abnormal ☐	08:19
38	**No. 2 Q-BOP PM10 Baghouse Stack**	Normal ☑	Abnormal ☐	09:05

If the facility is not operating, put the time and SD (for source down) in the Time column.

Circle only the monitoring points below in bold that **you did not check** for any abnormal and visual conditions **while in operation**.

1 14 15 19 20 22 24 32 33 34 35 37 38

5-4

Iron and Steel Subsidiary Source Audit
USS Gary Works

Date: 12/05/07 Start Time: 06 30
Inspector: A. Richardson End Time: 12 30

	Monitor Point	Condition		Time
1	**No. 14 Blast Furnace Casthouse Baghouse Stack**	Normal ☒	Abnormal ☐	0910
2	No. 14 Blast Furnace Stockhouse	Normal ☒	Abnormal ☐	0930
3	No. 14 Blast Furnace Stoves Stack	Normal ☒	Abnormal ☐	1210
4	No. 14 Blast Furnace Top	Normal ☒	Abnormal ☐	1215
5	No. 4 Blast Furnace Stoves Stack	Normal ☒	Abnormal ☐	1145
6	No. 4 Blast Furnace Top	Normal ☒	Abnormal ☐	1150
7	No. 6 Blast Furnace Stoves Stack	Normal ☒	Abnormal ☐	1155 SD
8	No. 6 Blast Furnace Top	Normal ☒	Abnormal ☐	1200 SD
9	No. 8 Blast Furnace Stoves Stack	Normal ☒	Abnormal ☐	1205 SD
10	No. 8 Blast Furnace Top	Normal ☒	Abnormal ☐	1207 SD
11	Process Vessel Maintenance Facility	Normal ☒	Abnormal ☐	1220
12	Sinter Plant Cooling Stack 1	Normal ☒	Abnormal ☐	1040
13	Sinter Plant Cooling Stack 3	Normal ☒	Abnormal ☐	1043
14	**Sinter Plant Discharge Area Baghouse Stack 1**	Normal ☒	Abnormal ☐	1048
15	**Sinter Plant Discharge Area Baghouse Stack 3**	Normal ☒	Abnormal ☐	1050
16	Sinter Plant S1-S2 Conveyor Baghouse Stack	Normal ☒	Abnormal ☐	1105
17	Sinter Plant Sinter Screening Station Baghouse Stack	Normal ☒	Abnormal ☐	1115
18	Sinter Plant Storage Bins Building Baghouse Stack	Normal ☒	Abnormal ☐	1120
19	**Sinter Plant Windbox Stack 1 (North)**	Normal ☒	Abnormal ☐	1135
20	**Sinter Plant Windbox Stack 2 (South)**	Normal ☒	Abnormal ☐	1140
21	TBBH No. 4A Boiler	Normal ☒	Abnormal ☐	0852
22	**No. 1 BOP CASBell/OB Lancing Station Baghouse Stacks**	Normal ☒	Abnormal ☐	0645
23	No. 1 BOP Iron Desulfurization Building Fugitive Emissions	Normal ☒	Abnormal ☐	0650
24	**No. 1 BOP Desulfurization Baghouse Stacks**	Normal ☒	Abnormal ☐	0655
25	No. 1 BOP Flux Handling System Baghouse No. 3 Vent	Normal ☒	Abnormal ☐	0700
26	No. 2 QBOP 116' Flux Handling System Baghouse Stack (North)	Normal ☒	Abnormal ☐	0730
27	No. 2 QBOP 116' Flux Handling System Baghouse Stack (South)	Normal ☒	Abnormal ☐	0733
28	No. 2 QBOP 166' Flux Handling System Baghouse (Center)	Normal ☒	Abnormal ☐	0723
29	No. 2 QBOP 166' Flux Handling System Baghouse (North)	Normal ☒	Abnormal ☐	0721
30	No. 2 QBOP 166' Flux Handling System Baghouse (South)	Normal ☒	Abnormal ☐	0725
31	No. 2 QBOP Day Tank Lime Silo Baghouse Stack	Normal ☒	Abnormal ☐	0715
32	**No. 2 QBOP Desulfurization Baghouse Stacks**	Normal ☒	Abnormal ☐	0935
33	**No. 2 QBOP LMF No. 1 Baghouse Stacks**	Normal ☒	Abnormal ☐	0820
34	**No. 2 QBOP LMF No. 2 Baghouse Stacks**	Normal ☒	Abnormal ☐	0755
35	**No. 2 QBOP LMF No. 3 Baghouse Stacks**	Normal ☒	Abnormal ☐	0800
36	No. 2 QBOP Lime Dumping Station Baghouse Stack	Normal ☒	Abnormal ☐	0710
37	**No. 2 Q-BOP RH Vacuum Degasser Baghouse Stacks**	Normal ☒	Abnormal ☐	0825
38	**No. 2 Q-BOP PM10 Baghouse Stack**	Normal ☒	Abnormal ☐	0940

If the facility is not operating, put the time and SD (for source down) in the Time column.

Circle only the monitoring points below in bold that **you did not check** for any abnormal and visual conditions **while in operation**.

1 14 15 19 20 22 24 32 33 34 35 37 38

5-5

Iron and Steel Subsidiary Source Audit
USS Gary Works

Date: 11/17/07
Inspector:

Start Time: 0520 A.
End Time: 1115 A.

	Monitor Point	Condition		Time	
1	No. 14 Blast Furnace Casthouse Baghouse Stack	Normal ☒	Abnormal ☐	0833	8
2	No. 14 Blast Furnace Stockhouse	Normal ☒	Abnormal ☐	0841	6
3	No. 14 Blast Furnace Stoves Stack	Normal ☒	Abnormal ☐	0958	
4	No. 14 Blast Furnace Top	Normal ☒	Abnormal ☐	0953	
5	No. 4 Blast Furnace Stoves Stack	Normal ☒	Abnormal ☐	0934	
6	No. 4 Blast Furnace Top	Normal ☒	Abnormal ☐	0939	
7	No. 6 Blast Furnace Stoves Stack	Normal ☒	Abnormal ☐	SD 0929	
8	No. 6 Blast Furnace Top	Normal ☒	Abnormal ☐	SD 0933	
9	No. 8 Blast Furnace Stoves Stack	Normal ☒	Abnormal ☐	0944	
10	No. 8 Blast Furnace Top	Normal ☒	Abnormal ☐	0948	
11	Process Vessel Maintenance Facility	Normal ☒	Abnormal ☐	1104	9
12	Sinter Plant Cooling Stack 1	Normal ☒	Abnormal ☐	1036	
13	Sinter Plant Cooling Stack 3	Normal ☒	Abnormal ☐	1033	
14	Sinter Plant Discharge Area Baghouse Stack 1	Normal ☒	Abnormal ☐	1044	
15	Sinter Plant Discharge Area Baghouse Stack 3	Normal ☒	Abnormal ☐	1039	2
16	Sinter Plant S1-S2 Conveyor Baghouse Stack	Normal ☒	Abnormal ☐	1047	0
17	Sinter Plant Sinter Screening Station Baghouse Stack	Normal ☒	Abnormal ☐	1052	
18	Sinter Plant Storage Bins Building Baghouse Stack	Normal ☒	Abnormal ☐	1057	1
19	Sinter Plant Windbox Stack 1 (North)	Normal ☒	Abnormal ☐	1026	
20	Sinter Plant Windbox Stack 2 (South)	Normal ☒	Abnormal ☐	1029	2
21	TBBH No. 4A Boiler	Normal ☒	Abnormal ☐	0822	7
22	No. 1 BOP CASBell/OB Lancing Station Baghouse Stacks	Normal ☒	Abnormal ☐	0908	
23	No. 1 BOP Iron Desulfurization Building Fugitive Emissions	Normal ☒	Abnormal ☐	0913	
24	No. 1 BOP Desulfurization Baghouse Stacks	Normal ☒	Abnormal ☐	0918	
25	No. 1 BOP Flux Handling System Baghouse No. 3 Vent	Normal ☒	Abnormal ☐	0923	8
26	No. 2 QBOP 116' Flux Handling System Baghouse Stack (North)	Normal ☒	Abnormal ☐	0725	
27	No. 2 QBOP 116' Flux Handling System Baghouse Stack (South)	Normal ☒	Abnormal ☐	0727	
28	No. 2 QBOP 166' Flux Handling System Baghouse (Center)	Normal ☒	Abnormal ☐	0729	
29	No. 2 QBOP 166' Flux Handling System Baghouse (North)	Normal ☒	Abnormal ☐	0731	
30	No. 2 QBOP 166' Flux Handling System Baghouse (South)	Normal ☒	Abnormal ☐	0733	5
31	No. 2 QBOP Day Tank Lime Silo Baghouse Stack	Normal ☒	Abnormal ☐	0640	
32	No. 2 QBOP Desulfurization Baghouse Stacks	Normal ☒	Abnormal ☐	0848	4
33	No. 2 QBOP LMF No. 1 Baghouse Stacks	Normal ☒	Abnormal ☐	0806	
34	No. 2 QBOP LMF No. 2 Baghouse Stacks	Normal ☒	Abnormal ☐	0752	
35	No. 2 QBOP LMF No. 3 Baghouse Stacks	Normal ☒	Abnormal ☐	0757	2
36	No. 2 QBOP Lime Dumping Station Baghouse Stack	Normal ☒	Abnormal ☐	0645	
37	No. 2 Q-BOP RH Vacuum Degasser Baghouse Stacks	Normal ☒	Abnormal ☐	0811	6
38	No. 2 Q-BOP PM10 Baghouse Stack	Normal ☒	Abnormal ☐	0855	1

If the facility is not operating, put the time and SD (for source down) in the Time column.

SPS (28) A 10 03 A/26

Circle only the monitoring points below in bold that you did not check for any abnormal and visual conditions while in operation.

1 14 15 19 20 22 24 32 33 34 35 37 38

EIRS Home

Create New Incident Report

List Reports

Search

Report Statistics

Administration

Jeopardy Report

Login

Help

5-6

Iron and Steel Subsidiary Source Audit
USS Gary Works

Date: 11/10/07
Inspector:

Start Time: 0545 A
End Time: 1100 A

	Monitor Point	Condition		Time	
1	**No. 14 Blast Furnace Casthouse Baghouse Stack**	Normal ☒	Abnormal ☐	0746	1
2	No. 14 Blast Furnace Stockhouse	Normal ☒	Abnormal ☐	0805	0
3	No. 14 Blast Furnace Stoves Stack	Normal ☒	Abnormal ☐	0752	
4	No. 14 Blast Furnace Top	Normal ☒	Abnormal ☐	0757	2
5	No. 4 Blast Furnace Stoves Stack	Normal ☒	Abnormal ☐	0835	
6	No. 4 Blast Furnace Top	Normal ☒	Abnormal ☐	0840	5
7	No. 6 Blast Furnace Stoves Stack	Normal ☒	Abnormal ☐	SD 0921	
8	No. 6 Blast Furnace Top	Normal ☒	Abnormal ☐	SD 0926	1
9	No. 8 Blast Furnace Stoves Stack	Normal ☒	Abnormal ☐	0731	
10	No. 8 Blast Furnace Top	Normal ☒	Abnormal ☐	0736	1
11	Process Vessel Maintenance Facility *Stopped.	Normal ☒	Abnormal ☐	1045	0
12	Sinter Plant Cooling Stack 1	Normal ☒	Abnormal ☐	1011	
13	Sinter Plant Cooling Stack 3	Normal ☒	Abnormal ☐	1008	
14	**Sinter Plant Discharge Area Baghouse Stack 1**	Normal ☒	Abnormal ☐	1023	
15	**Sinter Plant Discharge Area Baghouse Stack 3**	Normal ☒	Abnormal ☐	1014	7
16	Sinter Plant S1-S2 Conveyor Baghouse Stack	Normal ☒	Abnormal ☐	1018	
17	Sinter Plant Sinter Screening Station Baghouse Stack	Normal ☒	Abnormal ☐	1028	
18	Sinter Plant Storage Bins Building Baghouse Stack	Normal ☒	Abnormal ☐	1034	8
19	**Sinter Plant Windbox Stack 1 (North)**	Normal ☒	Abnormal ☐	1001	
20	**Sinter Plant Windbox Stack 2 (South)**	Normal ☒	Abnormal ☐	1004	7
21	TBBH No. 4A Boiler	Normal ☒	Abnormal ☐	0725	0
22	**No. 1 BOP CASBell/OB Lancing Station Baghouse Stacks**	Normal ☒	Abnormal ☐	0850	
23	No. 1 BOP Iron Desulfurization Building Fugitive Emissions	Normal ☒	Abnormal ☐	0855	
24	**No. 1 BOP Desulfurization Baghouse Stacks**	Normal ☒	Abnormal ☐	0900	
25	No. 1 BOP Flux Handling System Baghouse No. 3 Vent	Normal ☒	Abnormal ☐	0905	0
26	No. 2 QBOP 116' Flux Handling System Baghouse Stack (North)	Normal ☒	Abnormal ☐	0711	
27	No. 2 QBOP 116' Flux Handling System Baghouse Stack (South)	Normal ☒	Abnormal ☐	0713	
28	No. 2 QBOP 166' Flux Handling System Baghouse (Center)	Normal ☒	Abnormal ☐	0715	
29	No. 2 QBOP 166' Flux Handling System Baghouse (North)	Normal ☒	Abnormal ☐	0717	
30	No. 2 QBOP 166' Flux Handling System Baghouse (South)	Normal ☒	Abnormal ☐	0719	1
31	No. 2 QBOP Day Tank Lime Silo Baghouse Stack N/A	Normal ☒	Abnormal ☐	0631	6
32	**No. 2 QBOP Desulfurization Baghouse Stacks**	Normal ☒	Abnormal ☐	0812	
33	**No. 2 QBOP LMF No. 1 Baghouse Stacks**	Normal ☒	Abnormal ☐	0654	
34	**No. 2 QBOP LMF No. 2 Baghouse Stacks**	Normal ☒	Abnormal ☐	0640	
35	**No. 2 QBOP LMF No. 3 Baghouse Stacks**	Normal ☒	Abnormal ☐	0645	0
36	No. 2 QBOP Lime Dumping Station Baghouse Stack N/A	Normal ☒	Abnormal ☐	0626	
37	**No. 2 Q-BOP RH Vacuum Degasser Baghouse Stacks**	Normal ☒	Abnormal ☐	0649	4
38	**No. 2 Q-BOP PM10 Baghouse Stack**	Normal ☒	Abnormal ☐	0818	2

If the facility is not operating, put the time and SD (for source down) in the Time column.

(#6 Bf ↓ "Storm" Item #7) 11/3/05 (B) A. 10" A – No Dem Trust-Not #38.

Circle only the monitoring points below in bold that **you did not check** for any abnormal and visual conditions **while in operation**.

1 14 15 19 20 22 24 32 33 34 35 37 38

5-7

Iron and Steel Subsidiary Source Audit
USS Gary Works

Date: 12-02-07 Start Time: 0722
Inspector: T. SKALK End Time: 1356

	Monitor Point	Condition		Time
1	**No. 14 Blast Furnace Casthouse Baghouse Stack**	Normal ☑	Abnormal ☐	1151
2	No. 14 Blast Furnace Stockhouse	Normal ☑	Abnormal ☐	1142
3	No. 14 Blast Furnace Stoves Stack	Normal ☑	Abnormal ☐	1156
4	No. 14 Blast Furnace Top	Normal ☑	Abnormal ☐	1201
5	No. 4 Blast Furnace Stoves Stack	Normal ☑	Abnormal ☐	1327
6	No. 4 Blast Furnace Top	Normal ☑	Abnormal ☐	1332
7	No. 6 Blast Furnace Stoves Stack	Normal ☑	Abnormal ☐	1337 SD
8	No. 6 Blast Furnace Top	Normal ☑	Abnormal ☐	1342 SD
9	No. 8 Blast Furnace Stoves Stack	Normal ☑	Abnormal ☐	1347 SD
10	No. 8 Blast Furnace Top	Normal ☑	Abnormal ☐	1352 SD
11	Process Vessel Maintenance Facility	Normal ☑	Abnormal ☐	0722
12	Sinter Plant Cooling Stack 1	Normal ☑	Abnormal ☐	1246
13	Sinter Plant Cooling Stack 3	Normal ☑	Abnormal ☐	1251
14	**Sinter Plant Discharge Area Baghouse Stack 1**	Normal ☑	Abnormal ☐	1302
15	**Sinter Plant Discharge Area Baghouse Stack 3**	Normal ☑	Abnormal ☐	1256
16	Sinter Plant S1-S2 Conveyor Baghouse Stack	Normal ☑	Abnormal ☐	1307
17	Sinter Plant Sinter Screening Station Baghouse Stack	Normal ☑	Abnormal ☐	1312
18	Sinter Plant Storage Bins Building Baghouse Stack	Normal ☑	Abnormal ☐	1318
19	**Sinter Plant Windbox Stack 1 (North)**	Normal ☑	Abnormal ☐	1238
20	**Sinter Plant Windbox Stack 2 (South)**	Normal ☑	Abnormal ☐	1233
21	TBBH No. 4A Boiler	Normal ☑	Abnormal ☐	1217
22	**No. 1 BOP CASBell/OB Lancing Station Baghouse Stacks**	Normal ☑	Abnormal ☐	0848
23	No. 1 BOP Iron Desulfurization Building Fugitive Emissions	Normal ☑	Abnormal ☐	0853
24	**No. 1 BOP Desulfurization Baghouse Stacks**	Normal ☑	Abnormal ☐	0858
25	No. 1 BOP Flux Handling System Baghouse No. 3 Vent	Normal ☑	Abnormal ☐	0843
26	No. 2 QBOP 116' Flux Handling System Baghouse Stack (North)	Normal ☑	Abnormal ☐	1014
27	No. 2 QBOP 116' Flux Handling System Baghouse Stack (South)	Normal ☑	Abnormal ☐	1020
28	No. 2 QBOP 166' Flux Handling System Baghouse (Center)	Normal ☑	Abnormal ☐	1009
29	No. 2 QBOP 166' Flux Handling System Baghouse (North)	Normal ☑	Abnormal ☐	1006
30	No. 2 QBOP 166' Flux Handling System Baghouse (South)	Normal ☑	Abnormal ☐	0956
31	No. 2 QBOP Day Tank Lime Silo Baghouse Stack	Normal ☑	Abnormal ☐	1124
32	**No. 2 QBOP Desulfurization Baghouse Stacks**	Normal ☑	Abnormal ☐	1134
33	**No. 2 QBOP LMF No. 1 Baghouse Stacks**	Normal ☑	Abnormal ☐	1057
34	**No. 2 QBOP LMF No. 2 Baghouse Stacks**	Normal ☑	Abnormal ☐	1043
35	**No. 2 QBOP LMF No. 3 Baghouse Stacks**	Normal ☑	Abnormal ☐	1048
36	No. 2 QBOP Lime Dumping Station Baghouse Stack	Normal ☑	Abnormal ☐	0925
37	**No. 2 Q-BOP RH Vacuum Degasser Baghouse Stacks**	Normal ☑	Abnormal ☐	1102
38	**No. 2 Q-BOP PM10 Baghouse Stack**	Normal ☑	Abnormal ☐	1129

If the facility is not operating, put the time and SD (for source down) in the Time column.

Circle only the monitoring points below in bold that <u>you did not check</u> for any abnormal and visual conditions <u>while in operation</u>.

1 14 15 19 20 22 24 32 33 34 35 37 38

5-8

Iron and Steel Subsidiary Source Audit
USS Gary Works

Date: 12/06/07
Inspector: A. RICHARDSON

Start Time: 0645
End Time: 1235

	Monitor Point	Condition		Time
1	No. 14 Blast Furnace Casthouse Baghouse Stack	Normal ☒	Abnormal ☐	1120
2	No. 14 Blast Furnace Stockhouse	Normal ☒	Abnormal ☐	1130
3	No. 14 Blast Furnace Stoves Stack	Normal ☒	Abnormal ☐	1034
4	No. 14 Blast Furnace Top	Normal ☒	Abnormal ☐	1028
5	No. 4 Blast Furnace Stoves Stack	Normal ☒	Abnormal ☐	1006
6	No. 4 Blast Furnace Top	Normal ☒	Abnormal ☐	1005
7	No. 6 Blast Furnace Stoves Stack	Normal ☒	Abnormal ☐	SD
8	No. 6 Blast Furnace Top	Normal ☒	Abnormal ☐	SD
9	No. 8 Blast Furnace Stoves Stack	Normal ☒	Abnormal ☐	1018
10	No. 8 Blast Furnace Top	Normal ☒	Abnormal ☐	1023
11	Process Vessel Maintenance Facility	Normal ☒	Abnormal ☐	1040
12	Sinter Plant Cooling Stack 1	Normal ☒	Abnormal ☐	0915
13	Sinter Plant Cooling Stack 3	Normal ☒	Abnormal ☐	0918
14	**Sinter Plant Discharge Area Baghouse Stack 1**	Normal ☒	Abnormal ☐	0921
15	**Sinter Plant Discharge Area Baghouse Stack 3**	Normal ☒	Abnormal ☐	0923
16	Sinter Plant S1-S2 Conveyor Baghouse Stack	Normal ☒	Abnormal ☐	0929
17	Sinter Plant Sinter Screening Station Baghouse Stack	Normal ☒	Abnormal ☐	0934
18	Sinter Plant Storage Bins Building Baghouse Stack	Normal ☒	Abnormal ☐	0939
19	**Sinter Plant Windbox Stack 1 (North)**	Normal ☒	Abnormal ☐	0950
20	**Sinter Plant Windbox Stack 2 (South)**	Normal ☒	Abnormal ☐	0953
21	TBBH No. 4A Boiler	Normal ☒	Abnormal ☐	1108
22	**No. 1 BOP CASBell/OB Lancing Station Baghouse Stacks**	Normal ☒	Abnormal ☐	0645
23	No. 1 BOP Iron Desulfurization Building Fugitive Emissions	Normal ☒	Abnormal ☐	0650
24	**No. 1 BOP Desulfurization Baghouse Stacks**	Normal ☒	Abnormal ☐	0655
25	No. 1 BOP Flux Handling System Baghouse No. 3 Vent	Normal ☒	Abnormal ☐	0700
26	No. 2 QBOP 116' Flux Handling System Baghouse Stack (North)	Normal ☒	Abnormal ☐	0728
27	No. 2 QBOP 116' Flux Handling System Baghouse Stack (South)	Normal ☒	Abnormal ☐	0725
28	No. 2 QBOP 166' Flux Handling System Baghouse (Center)	Normal ☒	Abnormal ☐	0723
29	No. 2 QBOP 166' Flux Handling System Baghouse (North)	Normal ☒	Abnormal ☐	0731
30	No. 2 QBOP 166' Flux Handling System Baghouse (South)	Normal ☒	Abnormal ☐	0735
31	No. 2 QBOP Day Tank Lime Silo Baghouse Stack	Normal ☒	Abnormal ☐	0715
32	**No. 2 QBOP Desulfurization Baghouse Stacks**	Normal ☒	Abnormal ☐	1140
33	**No. 2 QBOP LMF No. 1 Baghouse Stacks**	Normal ☒	Abnormal ☐	0805
34	**No. 2 QBOP LMF No. 2 Baghouse Stacks**	Normal ☒	Abnormal ☐	0740
35	**No. 2 QBOP LMF No. 3 Baghouse Stacks**	Normal ☒	Abnormal ☐	0745
36	No. 2 QBOP Lime Dumping Station Baghouse Stack	Normal ☒	Abnormal ☐	0710
37	**No. 2 Q-BOP RH Vacuum Degasser Baghouse Stacks**	Normal ☒	Abnormal ☐	0810
38	**No. 2 Q-BOP PM10 Baghouse Stack**	Normal ☒	Abnormal ☐	1145

If the facility is not operating, put the time and SD (for source down) in the Time column.

Circle only the monitoring points below in bold that <u>you did not check</u> for any abnormal and visual conditions <u>while in operation</u>.

1 14 15 19 20 22 24 32 33 34 35 37 38

5-9

Iron and Steel Subsidiary Source Audit
USS Gary Works

Date: 11/27/07
Inspector: [signature]

Start Time: 0716
End Time: 1207

	Monitor Point	Condition		Time
1	No. 14 Blast Furnace Casthouse Baghouse Stack	Normal ☑	Abnormal ☐	0817 SD
2	No. 14 Blast Furnace Stockhouse	Normal ☑	Abnormal ☐	0939 SD
3	No. 14 Blast Furnace Stoves Stack	Normal ☑	Abnormal ☐	1137 SD
4	No. 14 Blast Furnace Top	Normal ☑	Abnormal ☐	SD
5	No. 4 Blast Furnace Stoves Stack	Normal ☑	Abnormal ☐	
6	No. 4 Blast Furnace Top	Normal ☑	Abnormal ☐	
7	No. 6 Blast Furnace Stoves Stack	Normal ☑	Abnormal ☐	SD
8	No. 6 Blast Furnace Top	Normal ☑	Abnormal ☐	SD
9	No. 8 Blast Furnace Stoves Stack	Normal ☑	Abnormal ☐	
10	No. 8 Blast Furnace Top	Normal ☑	Abnormal ☐	1207
11	Process Vessel Maintenance Facility	Normal ☑	Abnormal ☐	0911
12	Sinter Plant Cooling Stack 1	Normal ☑	Abnormal ☐	1038
13	Sinter Plant Cooling Stack 3	Normal ☑	Abnormal ☐	1042
14	**Sinter Plant Discharge Area Baghouse Stack 1**	Normal ☑	Abnormal ☐	1029
15	**Sinter Plant Discharge Area Baghouse Stack 3**	Normal ☑	Abnormal ☐	1033
16	Sinter Plant S1-S2 Conveyor Baghouse Stack	Normal ☑	Abnormal ☐	1047
17	Sinter Plant Sinter Screening Station Baghouse Stack	Normal ☑	Abnormal ☐	1051
18	Sinter Plant Storage Bins Building Baghouse Stack	Normal ☑	Abnormal ☐	1056
19	**Sinter Plant Windbox Stack 1 (North)**	Normal ☑	Abnormal ☐	1020
20	**Sinter Plant Windbox Stack 2 (South)**	Normal ☑	Abnormal ☐	1024
21	TBBH No. 4A Boiler	Normal ☑	Abnormal ☐	0905
22	**No. 1 BOP CASBell/OB Lancing Station Baghouse Stacks**	Normal ☑	Abnormal ☐	0929
23	No. 1 BOP Iron Desulfurization Building Fugitive Emissions	Normal ☑	Abnormal ☐	0924
24	**No. 1 BOP Desulfurization Baghouse Stacks**	Normal ☑	Abnormal ☐	0918
25	No. 1 BOP Flux Handling System Baghouse No. 3 Vent	Normal ☑	Abnormal ☐	0943
26	No. 2 QBOP 116' Flux Handling System Baghouse Stack (North)	Normal ☑	Abnormal ☐	0726
27	No. 2 QBOP 116' Flux Handling System Baghouse Stack (South)	Normal ☑	Abnormal ☐	0730
28	No. 2 QBOP 166' Flux Handling System Baghouse (Center)	Normal ☑	Abnormal ☐	0738
29	No. 2 QBOP 166' Flux Handling System Baghouse (North)	Normal ☑	Abnormal ☐	0742
30	No. 2 QBOP 166' Flux Handling System Baghouse (South)	Normal ☑	Abnormal ☐	0734
31	No. 2 QBOP Day Tank Lime Silo Baghouse Stack	Normal ☑	Abnormal ☐	0720
32	**No. 2 QBOP Desulfurization Baghouse Stacks**	Normal ☑	Abnormal ☐	0824
33	**No. 2 QBOP LMF No. 1 Baghouse Stacks**	Normal ☑	Abnormal ☐	0749
34	**No. 2 QBOP LMF No. 2 Baghouse Stacks**	Normal ☑	Abnormal ☐	0753
35	**No. 2 QBOP LMF No. 3 Baghouse Stacks**	Normal ☑	Abnormal ☐	0756
36	No. 2 QBOP Lime Dumping Station Baghouse Stack	Normal ☑	Abnormal ☐	0716
37	**No. 2 Q-BOP RH Vacuum Degasser Baghouse Stacks**	Normal ☑	Abnormal ☐	0807
38	**No. 2 Q-BOP PM10 Baghouse Stack**	Normal ☑	Abnormal ☐	0812

If the facility is not operating, put the time and SD (for source down) in the Time column.

Circle only the monitoring points below in bold that <u>you did not check</u> for any abnormal and visual conditions <u>while in operation</u>.

1 14 15 19 20 22 24 32 33 34 35 37 38

Source Audit 11106.doc

5-10

Iron and Steel Subsidiary Source Audit
USS Gary Works

Date: 11/28/07
Inspector: [signature]

Start Time: 0712
End Time: 1115

	Monitor Point	Condition		Time
1	**No. 14 Blast Furnace Casthouse Baghouse Stack**	Normal ☑	Abnormal ☐	0812 SD
2	No. 14 Blast Furnace Stockhouse	Normal ☑	Abnormal ☐	0818 SD
3	No. 14 Blast Furnace Stoves Stack	Normal ☑	Abnormal ☐	1045 SD
4	No. 14 Blast Furnace Top	Normal ☑	Abnormal ☐	SD 30min
5	No. 4 Blast Furnace Stoves Stack	Normal ☑	Abnormal ☐	
6	No. 4 Blast Furnace Top	Normal ☑	Abnormal ☐	
7	No. 6 Blast Furnace Stoves Stack	Normal ☑	Abnormal ☐	SD
8	No. 6 Blast Furnace Top	Normal ☑	Abnormal ☐	SD
9	No. 8 Blast Furnace Stoves Stack	Normal ☑	Abnormal ☐	
10	No. 8 Blast Furnace Top	Normal ☑	Abnormal ☐	1115
11	Process Vessel Maintenance Facility	Normal ☑	Abnormal ☐	0905
12	Sinter Plant Cooling Stack 1	Normal ☑	Abnormal ☐	1005
13	Sinter Plant Cooling Stack 3	Normal ☑	Abnormal ☐	1014
14	**Sinter Plant Discharge Area Baghouse Stack 1**	Normal ☑	Abnormal ☐	1000
15	**Sinter Plant Discharge Area Baghouse Stack 3**	Normal ☑	Abnormal ☐	1009
16	Sinter Plant S1-S2 Conveyor Baghouse Stack	Normal ☑	Abnormal ☐	1018
17	Sinter Plant Sinter Screening Station Baghouse Stack	Normal ☑	Abnormal ☐	1022
18	Sinter Plant Storage Bins Building Baghouse Stack	Normal ☑	Abnormal ☐	1027
19	**Sinter Plant Windbox Stack 1 (North)**	Normal ☑	Abnormal ☐	0952
20	**Sinter Plant Windbox Stack 2 (South)**	Normal ☑	Abnormal ☐	0956
21	TBBH No. 4A Boiler	Normal ☑	Abnormal ☐	0900
22	**No. 1 BOP CASBell/OB Lancing Station Baghouse Stacks**	Normal ☑	Abnormal ☐	0919
23	No. 1 BOP Iron Desulfurization Building Fugitive Emissions	Normal ☑	Abnormal ☐	0914
24	**No. 1 BOP Desulfurization Baghouse Stacks**	Normal ☑	Abnormal ☐	0910
25	No. 1 BOP Flux Handling System Baghouse No. 3 Vent	Normal ☑	Abnormal ☐	0927
26	No. 2 QBOP 116' Flux Handling System Baghouse Stack (North)	Normal ☑	Abnormal ☐	0728
27	No. 2 QBOP 116' Flux Handling System Baghouse Stack (South)	Normal ☑	Abnormal ☐	0724
28	No. 2 QBOP 166' Flux Handling System Baghouse (Center)	Normal ☑	Abnormal ☐	0737
29	No. 2 QBOP 166' Flux Handling System Baghouse (North)	Normal ☑	Abnormal ☐	0733
30	No. 2 QBOP 166' Flux Handling System Baghouse (South)	Normal ☑	Abnormal ☐	0742
31	No. 2 QBOP Day Tank Lime Silo Baghouse Stack	Normal ☑	Abnormal ☐	0716
32	**No. 2 QBOP Desulfurization Baghouse Stacks**	Normal ☑	Abnormal ☐	0851
33	**No. 2 QBOP LMF No. 1 Baghouse Stacks**	Normal ☑	Abnormal ☐	0747
34	**No. 2 QBOP LMF No. 2 Baghouse Stacks**	Normal ☑	Abnormal ☐	0750
35	**No. 2 QBOP LMF No. 3 Baghouse Stacks**	Normal ☑	Abnormal ☐	0753
36	No. 2 QBOP Lime Dumping Station Baghouse Stack	Normal ☑	Abnormal ☐	0712
37	**No. 2 Q-BOP RH Vacuum Degasser Baghouse Stacks**	Normal ☑	Abnormal ☐	0801
38	**No. 2 Q-BOP PM10 Baghouse Stack**	Normal ☑	Abnormal ☐	0805

If the facility is not operating, put the time and SD (for source down) in the Time column.

Circle only the monitoring points below in bold that **you did not check** for any abnormal and visual conditions **while in operation**.

1 14 15 19 20 22 24 32 33 34 35 37 38

Source Audit 11106.doc

5-11

Iron and Steel Subsidiary Source Audit
USS Gary Works

Date: 11-23-07 Start Time: 07:11
Inspector: Chet Dudin End Time: 14:07

	Monitor Point	Condition		Time
1	**No. 14 Blast Furnace Casthouse Baghouse Stack**	Normal ☑	Abnormal ☐	09:03
2	No. 14 Blast Furnace Stockhouse	Normal ☑	Abnormal ☐	09:20
3	No. 14 Blast Furnace Stoves Stack	Normal ☑	Abnormal ☐	13:54
4	No. 14 Blast Furnace Top	Normal ☑	Abnormal ☐	13:58
5	No. 4 Blast Furnace Stoves Stack	Normal ☑	Abnormal ☐	13:38
6	No. 4 Blast Furnace Top	Normal ☑	Abnormal ☐	13:42
7	No. 6 Blast Furnace Stoves Stack	Normal ☑	Abnormal ☐	SD
8	No. 6 Blast Furnace Top	Normal ☑	Abnormal ☐	SD
9	No. 8 Blast Furnace Stoves Stack	Normal ☑	Abnormal ☐	13:46
10	No. 8 Blast Furnace Top	Normal ☑	Abnormal ☐	13:50
11	Process Vessel Maintenance Facility	Normal ☑	Abnormal ☐	14:03
12	Sinter Plant Cooling Stack 1	Normal ☑	Abnormal ☐	07:36
13	Sinter Plant Cooling Stack 3	Normal ☑	Abnormal ☐	07:30
14	**Sinter Plant Discharge Area Baghouse Stack 1**	Normal ☑	Abnormal ☐	07:22
15	**Sinter Plant Discharge Area Baghouse Stack 3**	Normal ☑	Abnormal ☐	07:26
16	Sinter Plant S1-S2 Conveyor Baghouse Stack	Normal ☑	Abnormal ☐	07:40
17	Sinter Plant Sinter Screening Station Baghouse Stack	Normal ☑	Abnormal ☐	07:45
18	Sinter Plant Storage Bins Building Baghouse Stack	Normal ☑	Abnormal ☐	07:50
19	**Sinter Plant Windbox Stack 1 (North)**	Normal ☑	Abnormal ☐	07:11
20	**Sinter Plant Windbox Stack 2 (South)**	Normal ☑	Abnormal ☐	07:15
21	TBBH No. 4A Boiler	Normal ☑	Abnormal ☐	10:01
22	**No. 1 BOP CASBell/OB Lancing Station Baghouse Stacks**	Normal ☑	Abnormal ☐	08:23
23	No. 1 BOP Iron Desulfurization Building Fugitive Emissions	Normal ☑	Abnormal ☐	08:27
24	**No. 1 BOP Desulfurization Baghouse Stacks**	Normal ☑	Abnormal ☐	08:31
25	No. 1 BOP Flux Handling System Baghouse No. 3 Vent	Normal ☑	Abnormal ☐	08:35
26	No. 2 QBOP 116' Flux Handling System Baghouse Stack (North)	Normal ☑	Abnormal ☐	10:34
27	No. 2 QBOP 116' Flux Handling System Baghouse Stack (South)	Normal ☑	Abnormal ☐	10:30
28	No. 2 QBOP 166' Flux Handling System Baghouse (Center)	Normal ☑	Abnormal ☐	10:40
29	No. 2 QBOP 166' Flux Handling System Baghouse (North)	Normal ☑	Abnormal ☐	10:44
30	No. 2 QBOP 166' Flux Handling System Baghouse (South)	Normal ☑	Abnormal ☐	10:48
31	No. 2 QBOP Day Tank Lime Silo Baghouse Stack	Normal ☑	Abnormal ☐	11:00
32	**No. 2 QBOP Desulfurization Baghouse Stacks**	Normal ☑	Abnormal ☐	09:25
33	**No. 2 QBOP LMF No. 1 Baghouse Stacks**	Normal ☑	Abnormal ☐	11:27
34	**No. 2 QBOP LMF No. 2 Baghouse Stacks**	Normal ☑	Abnormal ☐	11:05
35	**No. 2 QBOP LMF No. 3 Baghouse Stacks**	Normal ☑	Abnormal ☐	11:10
36	No. 2 QBOP Lime Dumping Station Baghouse Stack	Normal ☑	Abnormal ☐	11:15
37	**No. 2 Q-BOP RH Vacuum Degasser Baghouse Stacks**	Normal ☑	Abnormal ☐	11:22
38	**No. 2 Q-BOP PM10 Baghouse Stack**	Normal ☑	Abnormal ☐	09:30

If the facility is not operating, put the time and SD (for source down) in the Time column.

Circle only the monitoring points below in bold that **you did not check** for any abnormal and visual conditions **while in operation**.

1 14 15 19 20 22 24 32 33 34 35 37 38

Source Audit 11106.doc

5-12

Iron and Steel Subsidiary Source Audit
USS Gary Works

Date: 11-11-07 Start Time: 07:34
Inspector: Chet Dulin End Time: 14:12

	Monitor Point	Condition		Time
1	**No. 14 Blast Furnace Casthouse Baghouse Stack**	Normal ☑	Abnormal ☐	08:17
2	No. 14 Blast Furnace Stockhouse	Normal ☑	Abnormal ☐	08:29
3	No. 14 Blast Furnace Stoves Stack	Normal ☑	Abnormal ☐	13:43
4	No. 14 Blast Furnace Top	Normal ☑	Abnormal ☐	13:48
5	No. 4 Blast Furnace Stoves Stack	Normal ☑	Abnormal ☐	13:23
6	No. 4 Blast Furnace Top	Normal ☑	Abnormal ☐	13:28
7	No. 6 Blast Furnace Stoves Stack	Normal ☑	Abnormal ☐	13:53 SD
8	No. 6 Blast Furnace Top	Normal ☑	Abnormal ☐	13:53 SD
9	No. 8 Blast Furnace Stoves Stack	Normal ☑	Abnormal ☐	13:33
10	No. 8 Blast Furnace Top	Normal ☑	Abnormal ☐	13:38
11	Process Vessel Maintenance Facility	Normal ☑	Abnormal ☐	13:54
12	Sinter Plant Cooling Stack 1	Normal ☑	Abnormal ☐	12:30
13	Sinter Plant Cooling Stack 3	Normal ☑	Abnormal ☐	12:35
14	**Sinter Plant Discharge Area Baghouse Stack 1**	Normal ☑	Abnormal ☐	12:41
15	**Sinter Plant Discharge Area Baghouse Stack 3**	Normal ☑	Abnormal ☐	12:46
16	Sinter Plant S1-S2 Conveyor Baghouse Stack	Normal ☑	Abnormal ☐	12:52
17	Sinter Plant Sinter Screening Station Baghouse Stack	Normal ☑	Abnormal ☐	12:58
18	Sinter Plant Storage Bins Building Baghouse Stack	Normal ☑	Abnormal ☐	13:05
19	**Sinter Plant Windbox Stack 1 (North)**	Normal ☑	Abnormal ☐	14:02
20	**Sinter Plant Windbox Stack 2 (South)**	Normal ☑	Abnormal ☐	14:07
21	TBBH No. 4A Boiler	Normal ☑	Abnormal ☐	08:12
22	**No. 1 BOP CASBell/OB Lancing Station Baghouse Stacks**	Normal ☑	Abnormal ☐	07:40
23	No. 1 BOP Iron Desulfurization Building Fugitive Emissions	Normal ☑	Abnormal ☐	07:45
24	**No. 1 BOP Desulfurization Baghouse Stacks**	Normal ☑	Abnormal ☐	07:50
25	No. 1 BOP Flux Handling System Baghouse No. 3 Vent	Normal ☑	Abnormal ☐	07:54
26	No. 2 QBOP 116' Flux Handling System Baghouse Stack (North)	Normal ☑	Abnormal ☐	09:15
27	No. 2 QBOP 116' Flux Handling System Baghouse Stack (South)	Normal ☑	Abnormal ☐	09:11
28	No. 2 QBOP 166' Flux Handling System Baghouse (Center)	Normal ☑	Abnormal ☐	09:25
29	No. 2 QBOP 166' Flux Handling System Baghouse (North)	Normal ☑	Abnormal ☐	09:20
30	No. 2 QBOP 166' Flux Handling System Baghouse (South)	Normal ☑	Abnormal ☐	09:30
31	No. 2 QBOP Day Tank Lime Silo Baghouse Stack	Normal ☑	Abnormal ☐	08:42
32	**No. 2 QBOP Desulfurization Baghouse Stacks**	Normal ☑	Abnormal ☐	08:33
33	**No. 2 QBOP LMF No. 1 Baghouse Stacks**	Normal ☑	Abnormal ☐	10:00
34	**No. 2 QBOP LMF No. 2 Baghouse Stacks**	Normal ☑	Abnormal ☐	09:46
35	**No. 2 QBOP LMF No. 3 Baghouse Stacks**	Normal ☑	Abnormal ☐	09:51
36	No. 2 QBOP Lime Dumping Station Baghouse Stack	Normal ☑	Abnormal ☐	08:52
37	**No. 2 Q-BOP RH Vacuum Degasser Baghouse Stacks**	Normal ☑	Abnormal ☐	10:05
38	**No. 2 Q-BOP PM10 Baghouse Stack**	Normal ☑	Abnormal ☐	08:38

If the facility is not operating, put the time and SD (for source down) in the Time column.

Circle only the monitoring points below in bold that **you did not check** for any abnormal and visual conditions **while in operation**.

1 14 15 19 20 22 24 32 33 34 35 37 38

5-13

Iron and Steel Subsidiary Source Audit
USS Gary Works

Date: 12-1-07
Inspector: Chet Dunn

Start Time: 07:25
End Time: 12:59

	Monitor Point	Condition		Time
1	No. 14 Blast Furnace Casthouse Baghouse Stack	Normal ☑	Abnormal ☐	09:38
2	No. 14 Blast Furnace Stockhouse	Normal ☑	Abnormal ☐	10:00
3	No. 14 Blast Furnace Stoves Stack	Normal ☑	Abnormal ☐	12:51
4	No. 14 Blast Furnace Top	Normal ☑	Abnormal ☐	12:55
5	No. 4 Blast Furnace Stoves Stack	Normal ☑	Abnormal ☐	12:35
6	No. 4 Blast Furnace Top	Normal ☑	Abnormal ☐	12:39
7	No. 6 Blast Furnace Stoves Stack	Normal ☑	Abnormal ☐	SD
8	No. 6 Blast Furnace Top	Normal ☑	Abnormal ☐	SD
9	No. 8 Blast Furnace Stoves Stack	Normal ☑	Abnormal ☐	12:43
10	No. 8 Blast Furnace Top	Normal ☑	Abnormal ☐	12:47
11	Process Vessel Maintenance Facility	Normal ☑	Abnormal ☐	11:10
12	Sinter Plant Cooling Stack 1	Normal ☑	Abnormal ☐	07:56
13	Sinter Plant Cooling Stack 3	Normal ☑	Abnormal ☐	07:50
14	**Sinter Plant Discharge Area Baghouse Stack 1**	Normal ☑	Abnormal ☐	07:40
15	**Sinter Plant Discharge Area Baghouse Stack 3**	Normal ☑	Abnormal ☐	07:45
16	Sinter Plant S1-S2 Conveyor Baghouse Stack	Normal ☑	Abnormal ☐	08:01
17	Sinter Plant Sinter Screening Station Baghouse Stack	Normal ☑	Abnormal ☐	08:07
18	Sinter Plant Storage Bins Building Baghouse Stack	Normal ☑	Abnormal ☐	08:13
19	**Sinter Plant Windbox Stack 1 (North)**	Normal ☑	Abnormal ☐	07:25
20	**Sinter Plant Windbox Stack 2 (South)**	Normal ☑	Abnormal ☐	07:30
21	TBBH No. 4A Boiler	Normal ☑	Abnormal ☐	09:19
22	**No. 1 BOP CASBell/OB Lancing Station Baghouse Stacks**	Normal ☑	Abnormal ☐	08:45
23	No. 1 BOP Iron Desulfurization Building Fugitive Emissions	Normal ☑	Abnormal ☐	08:55
24	**No. 1 BOP Desulfurization Baghouse Stacks**	Normal ☑	Abnormal ☐	09:00
25	No. 1 BOP Flux Handling System Baghouse No. 3 Vent	Normal ☑	Abnormal ☐	08:50
26	No. 2 QBOP 116' Flux Handling System Baghouse Stack (North)	Normal ☑	Abnormal ☐	12:04
27	No. 2 QBOP 116' Flux Handling System Baghouse Stack (South)	Normal ☑	Abnormal ☐	12:08
28	No. 2 QBOP 166' Flux Handling System Baghouse (Center)	Normal ☑	Abnormal ☐	12:14
29	No. 2 QBOP 166' Flux Handling System Baghouse (North)	Normal ☑	Abnormal ☐	12:18
30	No. 2 QBOP 166' Flux Handling System Baghouse (South)	Normal ☑	Abnormal ☐	12:22
31	No. 2 QBOP Day Tank Lime Silo Baghouse Stack	Normal ☑	Abnormal ☐	10:05
32	**No. 2 QBOP Desulfurization Baghouse Stacks**	Normal ☑	Abnormal ☐	10:10
33	**No. 2 QBOP LMF No. 1 Baghouse Stacks**	Normal ☑	Abnormal ☐	11:44
34	**No. 2 QBOP LMF No. 2 Baghouse Stacks**	Normal ☑	Abnormal ☐	11:30
35	**No. 2 QBOP LMF No. 3 Baghouse Stacks**	Normal ☑	Abnormal ☐	11:35
36	No. 2 QBOP Lime Dumping Station Baghouse Stack	Normal ☑	Abnormal ☐	10:26
37	**No. 2 Q-BOP RH Vacuum Degasser Baghouse Stacks**	Normal ☑	Abnormal ☐	11:49
38	**No. 2 Q-BOP PM10 Baghouse Stack**	Normal ☑	Abnormal ☐	10:15

If the facility is not operating, put the time and SD (for source down) in the Time column.

Circle only the monitoring points below in bold that <u>you did not check</u> for any abnormal and visual conditions <u>while in operation</u>.

1 14 15 19 20 22 24 32 33 34 35 37 38

Source Audit 11106.doc

5-14

Iron and Steel Subsidiary Source Audit
USS Gary Works

Date: 11-30-07
Inspector: J. Johnson

Start Time: 0715
End Time: 1315

	Monitor Point	Condition		Time
1	No. 14 Blast Furnace Casthouse Baghouse Stack	Normal ☑	Abnormal ☐	0930
2	No. 14 Blast Furnace Stockhouse	Normal ☑	Abnormal ☐	0935
3	No. 14 Blast Furnace Stoves Stack	Normal ☑	Abnormal ☐	0715
4	No. 14 Blast Furnace Top	Normal ☑	Abnormal ☐	0720
5	No. 4 Blast Furnace Stoves Stack	Normal ☑	Abnormal ☐	DOWN *
6	No. 4 Blast Furnace Top	Normal ☑	Abnormal ☐	DOWN *
7	No. 6 Blast Furnace Stoves Stack	Normal ☑	Abnormal ☐	SD
8	No. 6 Blast Furnace Top	Normal ☑	Abnormal ☐	SD
9	No. 8 Blast Furnace Stoves Stack	Normal ☑	Abnormal ☐	
10	No. 8 Blast Furnace Top	Normal ☑	Abnormal ☐	
11	Process Vessel Maintenance Facility	Normal ☑	Abnormal ☐	0902
12	Sinter Plant Cooling Stack 1	Normal ☑	Abnormal ☐	0805
13	Sinter Plant Cooling Stack 3	Normal ☑	Abnormal ☐	0810
14	**Sinter Plant Discharge Area Baghouse Stack 1**	Normal ☑	Abnormal ☐	0815
15	**Sinter Plant Discharge Area Baghouse Stack 3**	Normal ☑	Abnormal ☐	0820
16	Sinter Plant S1-S2 Conveyor Baghouse Stack	Normal ☑	Abnormal ☐	0825
17	Sinter Plant Sinter Screening Station Baghouse Stack	Normal ☑	Abnormal ☐	0830
18	Sinter Plant Storage Bins Building Baghouse Stack	Normal ☑	Abnormal ☐	0835
19	**Sinter Plant Windbox Stack 1 (North)**	Normal ☑	Abnormal ☐	0800
20	**Sinter Plant Windbox Stack 2 (South)**	Normal ☑	Abnormal ☐	0755
21	TBBH No. 4A Boiler	Normal ☑	Abnormal ☐	0908
22	**No. 1 BOP CASBell/OB Lancing Station Baghouse Stacks**	Normal ☑	Abnormal ☐	1209
23	No. 1 BOP Iron Desulfurization Building Fugitive Emissions	Normal ☑	Abnormal ☐	1215
24	**No. 1 BOP Desulfurization Baghouse Stacks**	Normal ☑	Abnormal ☐	1230
25	No. 1 BOP Flux Handling System Baghouse No. 3 Vent	Normal ☑	Abnormal ☐	1222
26	No. 2 QBOP 116' Flux Handling System Baghouse Stack (North)	Normal ☑	Abnormal ☐	1608
27	No. 2 QBOP 116' Flux Handling System Baghouse Stack (South)	Normal ☑	Abnormal ☐	1614
28	No. 2 QBOP 166' Flux Handling System Baghouse (Center)	Normal ☑	Abnormal ☐	1619
29	No. 2 QBOP 166' Flux Handling System Baghouse (North)	Normal ☑	Abnormal ☐	1624
30	No. 2 QBOP 166' Flux Handling System Baghouse (South)	Normal ☑	Abnormal ☐	1629
31	No. 2 QBOP Day Tank Lime Silo Baghouse Stack	Normal ☑	Abnormal ☐	1105
32	**No. 2 QBOP Desulfurization Baghouse Stacks**	Normal ☑	Abnormal ☐	1640
33	**No. 2 QBOP LMF No. 1 Baghouse Stacks**	Normal ☑	Abnormal ☐	1645
34	**No. 2 QBOP LMF No. 2 Baghouse Stacks**	Normal ☑	Abnormal ☐	1650
35	**No. 2 QBOP LMF No. 3 Baghouse Stacks**	Normal ☑	Abnormal ☐	1658
36	No. 2 QBOP Lime Dumping Station Baghouse Stack	Normal ☑	Abnormal ☐	0947
37	**No. 2 Q-BOP RH Vacuum Degasser Baghouse Stacks**	Normal ☑	Abnormal ☐	0950
38	**No. 2 Q-BOP PM10 Baghouse Stack**	Normal ☑	Abnormal ☐	0955

If the facility is not operating, put the time and SD (for source down) in the Time column.

Circle only the monitoring points below in bold that **you did not check** for any abnormal and visual conditions **while in operation**.

1 14 15 19 20 22 24 32 33 34 35 37 38

Source Audit 11106.doc

5-15

Iron and Steel Subsidiary Source Audit
USS Gary Works

Date: 11/12/07
Inspector: FRANK W GRUBACH

Start Time: [redacted] 0706
End Time: 1318

	Monitor Point	Condition		Time
1	**No. 14 Blast Furnace Casthouse Baghouse Stack**	Normal ☑	Abnormal ☐	0826
2	No. 14 Blast Furnace Stockhouse	Normal ☑	Abnormal ☐	0847
3	No. 14 Blast Furnace Stoves Stack	Normal ☑	Abnormal ☐	1248
4	No. 14 Blast Furnace Top	Normal ☑	Abnormal ☐	
5	No. 4 Blast Furnace Stoves Stack	Normal ☑	Abnormal ☐	
6	No. 4 Blast Furnace Top	Normal ☑	Abnormal ☐	
7	No. 6 Blast Furnace Stoves Stack	Normal ☑	Abnormal ☐	SD
8	No. 6 Blast Furnace Top	Normal ☑	Abnormal ☐	SD
9	No. 8 Blast Furnace Stoves Stack	Normal ☑	Abnormal ☐	
10	No. 8 Blast Furnace Top	Normal ☑	Abnormal ☐	
11	Process Vessel Maintenance Facility	Normal ☑	Abnormal ☐	0935
12	Sinter Plant Cooling Stack 1	Normal ☑	Abnormal ☐	1029
13	Sinter Plant Cooling Stack 3	Normal ☑	Abnormal ☐	1038
14	**Sinter Plant Discharge Area Baghouse Stack 1**	Normal ☑	Abnormal ☐	1024
15	**Sinter Plant Discharge Area Baghouse Stack 3**	Normal ☑	Abnormal ☐	1033
16	Sinter Plant S1-S2 Conveyor Baghouse Stack	Normal ☑	Abnormal ☐	1043
17	Sinter Plant Sinter Screening Station Baghouse Stack	Normal ☑	Abnormal ☐	1048
18	Sinter Plant Storage Bins Building Baghouse Stack	Normal ☑	Abnormal ☐	1053
19	**Sinter Plant Windbox Stack 1 (North)**	Normal ☑	Abnormal ☐	1122
20	**Sinter Plant Windbox Stack 2 (South)**	Normal ☑	Abnormal ☐	1127
21	TBBH No. 4A Boiler	Normal ☑	Abnormal ☐	0929
22	**No. 1 BOP CASBell/OB Lancing Station Baghouse Stacks**	Normal ☑	Abnormal ☐	0950
23	No. 1 BOP Iron Desulfurization Building Fugitive Emissions	Normal ☑	Abnormal ☐	0945
24	**No. 1 BOP Desulfurization Baghouse Stacks**	Normal ☑	Abnormal ☐	0942
25	No. 1 BOP Flux Handling System Baghouse No. 3 Vent	Normal ☑	Abnormal ☐	0954
26	No. 2 QBOP 116' Flux Handling System Baghouse Stack (North)	Normal ☑	Abnormal ☐	0720
27	No. 2 QBOP 116' Flux Handling System Baghouse Stack (South)	Normal ☑	Abnormal ☐	0727
28	No. 2 QBOP 166' Flux Handling System Baghouse (Center)	Normal ☑	Abnormal ☐	0737
29	No. 2 QBOP 166' Flux Handling System Baghouse (North)	Normal ☑	Abnormal ☐	0741
30	No. 2 QBOP 166' Flux Handling System Baghouse (South)	Normal ☑	Abnormal ☐	0746
31	No. 2 QBOP Day Tank Lime Silo Baghouse Stack	Normal ☑	Abnormal ☐	0709
32	**No. 2 QBOP Desulfurization Baghouse Stacks**	Normal ☑	Abnormal ☐	0850
33	**No. 2 QBOP LMF No. 1 Baghouse Stacks**	Normal ☑	Abnormal ☐	0756
34	**No. 2 QBOP LMF No. 2 Baghouse Stacks**	Normal ☑	Abnormal ☐	0759
35	**No. 2 QBOP LMF No. 3 Baghouse Stacks**	Normal ☑	Abnormal ☐	0803
36	No. 2 QBOP Lime Dumping Station Baghouse Stack	Normal ☑	Abnormal ☐	0706
37	**No. 2 Q-BOP RH Vacuum Degasser Baghouse Stacks**	Normal ☑	Abnormal ☐	0811
38	**No. 2 Q-BOP PM10 Baghouse Stack**	Normal ☑	Abnormal ☐	0814

If the facility is not operating, put the time and SD (for source down) in the Time column.

Circle only the monitoring points below in bold that **you did not check** for any abnormal and visual conditions **while in operation**.

1 14 15 19 20 22 24 32 33 34 35 37 38

C-16

Iron and Steel Subsidiary Source Audit
USS Gary Works

Date: 11/19/07
Inspector: A. Richardson

Start Time: 0630
End Time: 1230

	Monitor Point	Condition		Time
1	**No. 14 Blast Furnace Casthouse Baghouse Stack**	Normal ☒	Abnormal ☐	0855
2	No. 14 Blast Furnace Stockhouse	Normal ☒	Abnormal ☐	0910
3	No. 14 Blast Furnace Stoves Stack	Normal ☒	Abnormal ☐	1206
4	No. 14 Blast Furnace Top	Normal ☒	Abnormal ☐	1212
5	No. 4 Blast Furnace Stoves Stack	Normal ☒	Abnormal ☐	1135
6	No. 4 Blast Furnace Top	Normal ☒	Abnormal ☐	1140
7	No. 6 Blast Furnace Stoves Stack	Normal ☒	Abnormal ☐	1146 SD
8	No. 6 Blast Furnace Top	Normal ☒	Abnormal ☐	1149 SD
9	No. 8 Blast Furnace Stoves Stack	Normal ☒	Abnormal ☐	1155
10	No. 8 Blast Furnace Top	Normal ☒	Abnormal ☐	1200
11	Process Vessel Maintenance Facility	Normal ☒	Abnormal ☐	1246
12	Sinter Plant Cooling Stack 1	Normal ☒	Abnormal ☐	1035
13	Sinter Plant Cooling Stack 3	Normal ☒	Abnormal ☐	1037
14	**Sinter Plant Discharge Area Baghouse Stack 1**	Normal ☒	Abnormal ☐	1040
15	**Sinter Plant Discharge Area Baghouse Stack 3**	Normal ☒	Abnormal ☐	1042
16	Sinter Plant S1-S2 Conveyor Baghouse Stack	Normal ☒	Abnormal ☐	1047
17	Sinter Plant Sinter Screening Station Baghouse Stack	Normal ☒	Abnormal ☐	1053
18	Sinter Plant Storage Bins Building Baghouse Stack	Normal ☒	Abnormal ☐	1100
19	**Sinter Plant Windbox Stack 1 (North)**	Normal ☒	Abnormal ☐	1130
20	**Sinter Plant Windbox Stack 2 (South)**	Normal ☒	Abnormal ☐	1132
21	TBBH No. 4A Boiler	Normal ☒	Abnormal ☐	0833
22	**No. 1 BOP CASBell/OB Lancing Station Baghouse Stacks**	Normal ☒	Abnormal ☐	0630
23	No. 1 BOP Iron Desulfurization Building Fugitive Emissions	Normal ☒	Abnormal ☐	0635
24	**No. 1 BOP Desulfurization Baghouse Stacks**	Normal ☒	Abnormal ☐	0640
25	No. 1 BOP Flux Handling System Baghouse No. 3 Vent	Normal ☒	Abnormal ☐	0647
26	No. 2 QBOP 116' Flux Handling System Baghouse Stack (North)	Normal ☒	Abnormal ☐	0720
27	No. 2 QBOP 116' Flux Handling System Baghouse Stack (South)	Normal ☒	Abnormal ☐	0723
28	No. 2 QBOP 166' Flux Handling System Baghouse (Center)	Normal ☒	Abnormal ☐	0730
29	No. 2 QBOP 166' Flux Handling System Baghouse (North)	Normal ☒	Abnormal ☐	0727
30	No. 2 QBOP 166' Flux Handling System Baghouse (South)	Normal ☒	Abnormal ☐	0733
31	No. 2 QBOP Day Tank Lime Silo Baghouse Stack	Normal ☒	Abnormal ☐	0710
32	**No. 2 QBOP Desulfurization Baghouse Stacks**	Normal ☒	Abnormal ☐	0920
33	**No. 2 QBOP LMF No. 1 Baghouse Stacks**	Normal ☒	Abnormal ☐	0800
34	**No. 2 QBOP LMF No. 2 Baghouse Stacks**	Normal ☒	Abnormal ☐	0743
35	**No. 2 QBOP LMF No. 3 Baghouse Stacks**	Normal ☒	Abnormal ☐	0745
36	No. 2 QBOP Lime Dumping Station Baghouse Stack	Normal ☒	Abnormal ☐	0705
37	**No. 2 Q-BOP RH Vacuum Degasser Baghouse Stacks**	Normal ☒	Abnormal ☐	0805
38	**No. 2 Q-BOP PM10 Baghouse Stack**	Normal ☒	Abnormal ☐	0925

If the facility is not operating, put the time and SD (for source down) in the Time column.

Circle only the monitoring points below in bold that you did not check for any abnormal and visual conditions while in operation.

1 14 15 19 20 22 24 32 33 34 35 37 38

Source Audit 11106.doc

5-17

Iron and Steel Subsidiary Source Audit
USS Gary Works

Date: 11-22-07 Start Time: 0752
Inspector: J. Skalik End Time: 1349

	Monitor Point	Condition		Time
1	**No. 14 Blast Furnace Casthouse Baghouse Stack**	Normal ☑	Abnormal ☐	1133
2	No. 14 Blast Furnace Stockhouse	Normal ☑	Abnormal ☐	1124
3	No. 14 Blast Furnace Stoves Stack	Normal ☑	Abnormal ☐	1138
4	No. 14 Blast Furnace Top	Normal ☑	Abnormal ☐	1143
5	No. 4 Blast Furnace Stoves Stack	Normal ☑	Abnormal ☐	1315
6	No. 4 Blast Furnace Top	Normal ☑	Abnormal ☐	1320
7	No. 6 Blast Furnace Stoves Stack	Normal ☑	Abnormal ☐	SD ~ 1330
8	No. 6 Blast Furnace Top	Normal ☑	Abnormal ☐	SD 1334
9	No. 8 Blast Furnace Stoves Stack	Normal ☑	Abnormal ☐	1340
10	No. 8 Blast Furnace Top	Normal ☑	Abnormal ☐	1345
11	Process Vessel Maintenance Facility	Normal ☑	Abnormal ☐	1325
12	Sinter Plant Cooling Stack 1	Normal ☑	Abnormal ☐	1220
13	Sinter Plant Cooling Stack 3	Normal ☑	Abnormal ☐	1225
14	**Sinter Plant Discharge Area Baghouse Stack 1**	Normal ☑	Abnormal ☐	1236
15	**Sinter Plant Discharge Area Baghouse Stack 3**	Normal ☑	Abnormal ☐	1230
16	Sinter Plant S1-S2 Conveyor Baghouse Stack	Normal ☑	Abnormal ☐	1242
17	Sinter Plant Sinter Screening Station Baghouse Stack	Normal ☑	Abnormal ☐	1247
18	Sinter Plant Storage Bins Building Baghouse Stack	Normal ☑	Abnormal ☐	1253
19	**Sinter Plant Windbox Stack 1 (North)**	Normal ☑	Abnormal ☐	1207
20	**Sinter Plant Windbox Stack 2 (South)**	Normal ☑	Abnormal ☐	1212
21	TBBH No. 4A Boiler	Normal ☑	Abnormal ☐	1104
22	**No. 1 BOP CASBell/OB Lancing Station Baghouse Stacks**	Normal ☑	Abnormal ☐	0757
23	No. 1 BOP Iron Desulfurization Building Fugitive Emissions	Normal ☑	Abnormal ☐	0802
24	**No. 1 BOP Desulfurization Baghouse Stacks**	Normal ☑	Abnormal ☐	0807
25	No. 1 BOP Flux Handling System Baghouse No. 3 Vent	Normal ☑	Abnormal ☐	0752
26	No. 2 QBOP 116' Flux Handling System Baghouse Stack (North)	Normal ☑	Abnormal ☐	1016
27	No. 2 QBOP 116' Flux Handling System Baghouse Stack (South)	Normal ☑	Abnormal ☐	1021
28	No. 2 QBOP 166' Flux Handling System Baghouse (Center)	Normal ☑	Abnormal ☐	1007
29	No. 2 QBOP 166' Flux Handling System Baghouse (North)	Normal ☑	Abnormal ☐	1012
30	No. 2 QBOP 166' Flux Handling System Baghouse (South)	Normal ☑	Abnormal ☐	1002
31	No. 2 QBOP Day Tank Lime Silo Baghouse Stack	Normal ☑	Abnormal ☐	0845
32	**No. 2 QBOP Desulfurization Baghouse Stacks**	Normal ☑	Abnormal ☐	1117
33	**No. 2 QBOP LMF No. 1 Baghouse Stacks**	Normal ☑	Abnormal ☐	1047
34	**No. 2 QBOP LMF No. 2 Baghouse Stacks**	Normal ☑	Abnormal ☐	0855
35	**No. 2 QBOP LMF No. 3 Baghouse Stacks**	Normal ☑	Abnormal ☐	0900
36	No. 2 QBOP Lime Dumping Station Baghouse Stack	Normal ☑	Abnormal ☐	0839
37	**No. 2 Q-BOP RH Vacuum Degasser Baghouse Stacks**	Normal ☑	Abnormal ☐	1046
38	**No. 2 Q-BOP PM10 Baghouse Stack**	Normal ☑	Abnormal ☐	1112

If the facility is not operating, put the time and SD (for source down) in the Time column.

Circle only the monitoring points below in bold that **you did not check** for any abnormal and visual conditions **while in operation**.

1 14 15 19 20 22 24 32 33 34 35 37 38

Source Audit 11106.doc

5—18

Iron and Steel Subsidiary Source Audit
USS Gary Works

Date: 12/03/07
Inspector: [illegible]

Start Time: 0658
End Time: 1344

	Monitor Point	Condition		Time
1	**No. 14 Blast Furnace Casthouse Baghouse Stack**	Normal ☑	Abnormal ☐	0829
2	No. 14 Blast Furnace Stockhouse	Normal ☑	Abnormal ☐	0537
3	No. 14 Blast Furnace Stoves Stack	Normal ☑	Abnormal ☐	1314
4	No. 14 Blast Furnace Top	Normal ☑	Abnormal ☐	
5	No. 4 Blast Furnace Stoves Stack	Normal ☑	Abnormal ☐	
6	No. 4 Blast Furnace Top	Normal ☑	Abnormal ☐	
7	No. 6 Blast Furnace Stoves Stack	Normal ☑	Abnormal ☐	SD
8	No. 6 Blast Furnace Top	Normal ☑	Abnormal ☐	SD
9	No. 8 Blast Furnace Stoves Stack	Normal ☑	Abnormal ☐	SD
10	No. 8 Blast Furnace Top	Normal ☑	Abnormal ☐	1344 SD
11	Process Vessel Maintenance Facility	Normal ☑	Abnormal ☐	0925
12	Sinter Plant Cooling Stack 1	Normal ☑	Abnormal ☐	1243
13	Sinter Plant Cooling Stack 3	Normal ☑	Abnormal ☐	1248
14	**Sinter Plant Discharge Area Baghouse Stack 1**	Normal ☑	Abnormal ☐	1251
15	**Sinter Plant Discharge Area Baghouse Stack 3**	Normal ☑	Abnormal ☐	1255
16	Sinter Plant S1-S2 Conveyor Baghouse Stack	Normal ☑	Abnormal ☐	1259
17	Sinter Plant Sinter Screening Station Baghouse Stack	Normal ☑	Abnormal ☐	1303
18	Sinter Plant Storage Bins Building Baghouse Stack	Normal ☑	Abnormal ☐	1307
19	**Sinter Plant Windbox Stack 1 (North)**	Normal ☑	Abnormal ☐	1235
20	**Sinter Plant Windbox Stack 2 (South)**	Normal ☑	Abnormal ☐	1239
21	TBBH No. 4A Boiler	Normal ☑	Abnormal ☐	0921
22	**No. 1 BOP CASBell/OB Lancing Station Baghouse Stacks**	Normal ☑	Abnormal ☐	0943
23	No. 1 BOP Iron Desulfurization Building Fugitive Emissions	Normal ☑	Abnormal ☐	0935
24	**No. 1 BOP Desulfurization Baghouse Stacks**	Normal ☑	Abnormal ☐	0929
25	No. 1 BOP Flux Handling System Baghouse No. 3 Vent	Normal ☑	Abnormal ☐	0939
26	No. 2 QBOP 116' Flux Handling System Baghouse Stack (North)	Normal ☑	Abnormal ☐	0723
27	No. 2 QBOP 116' Flux Handling System Baghouse Stack (South)	Normal ☑	Abnormal ☐	0713
28	No. 2 QBOP 166' Flux Handling System Baghouse (Center)	Normal ☑	Abnormal ☐	0738
29	No. 2 QBOP 166' Flux Handling System Baghouse (North)	Normal ☑	Abnormal ☐	0731
30	No. 2 QBOP 166' Flux Handling System Baghouse (South)	Normal ☑	Abnormal ☐	0735
31	No. 2 QBOP Day Tank Lime Silo Baghouse Stack	Normal ☑	Abnormal ☐	0702
32	**No. 2 QBOP Desulfurization Baghouse Stacks**	Normal ☑	Abnormal ☐	0912
33	**No. 2 QBOP LMF No. 1 Baghouse Stacks**	Normal ☑	Abnormal ☐	0815
34	**No. 2 QBOP LMF No. 2 Baghouse Stacks**	Normal ☑	Abnormal ☐	0818
35	**No. 2 QBOP LMF No. 3 Baghouse Stacks**	Normal ☑	Abnormal ☐	0822
36	No. 2 QBOP Lime Dumping Station Baghouse Stack	Normal ☑	Abnormal ☐	0658
37	**No. 2 Q-BOP RH Vacuum Degasser Baghouse Stacks**	Normal ☑	Abnormal ☐	0758
38	**No. 2 Q-BOP PM10 Baghouse Stack**	Normal ☑	Abnormal ☐	0802

If the facility is not operating, put the time and SD (for source down) in the Time column.

Circle only the monitoring points below in bold that **you did not check** for any abnormal and visual conditions **while in operation**.

1 14 15 19 20 22 24 32 33 34 35 37 38

5-19

Iron and Steel Subsidiary Source Audit
USS Gary Works

Date: 11/16/07
Inspector: A. RICHARDSON

Start Time: 0630
End Time: 1215

	Monitor Point	Condition		Time
1	**No. 14 Blast Furnace Casthouse Baghouse Stack**	Normal ☒	Abnormal ☐	0900
2	No. 14 Blast Furnace Stockhouse	Normal ☒	Abnormal ☐	1120
3	No. 14 Blast Furnace Stoves Stack	Normal ☒	Abnormal ☐	1051
4	No. 14 Blast Furnace Top	Normal ☒	Abnormal ☐	1057
5	No. 4 Blast Furnace Stoves Stack	Normal ☒	Abnormal ☐	1039
6	No. 4 Blast Furnace Top	Normal ☒	Abnormal ☐	1045
7	No. 6 Blast Furnace Stoves Stack	Normal ☒	Abnormal ☐	1027 SD
8	No. 6 Blast Furnace Top	Normal ☒	Abnormal ☐	1033 SD
9	No. 8 Blast Furnace Stoves Stack	Normal ☒	Abnormal ☐	1015
10	No. 8 Blast Furnace Top	Normal ☒	Abnormal ☐	1021
11	Process Vessel Maintenance Facility	Normal ☒	Abnormal ☐	1103
12	Sinter Plant Cooling Stack 1	Normal ☒	Abnormal ☐	0930
13	Sinter Plant Cooling Stack 3	Normal ☒	Abnormal ☐	0933
14	**Sinter Plant Discharge Area Baghouse Stack 1**	Normal ☒	Abnormal ☐	0936
15	**Sinter Plant Discharge Area Baghouse Stack 3**	Normal ☒	Abnormal ☐	0939
16	Sinter Plant S1-S2 Conveyor Baghouse Stack	Normal ☒	Abnormal ☐	0944
17	Sinter Plant Sinter Screening Station Baghouse Stack	Normal ☒	Abnormal ☐	0950
18	Sinter Plant Storage Bins Building Baghouse Stack	Normal ☒	Abnormal ☐	0955
19	**Sinter Plant Windbox Stack 1 (North)**	Normal ☒	Abnormal ☐	1000
20	**Sinter Plant Windbox Stack 2 (South)**	Normal ☒	Abnormal ☐	1005
21	TBBH No. 4A Boiler	Normal ☒	Abnormal ☐	0840
22	**No. 1 BOP CASBell/OB Lancing Station Baghouse Stacks**	Normal ☒	Abnormal ☐	0630
23	No. 1 BOP Iron Desulfurization Building Fugitive Emissions	Normal ☒	Abnormal ☐	0635
24	**No. 1 BOP Desulfurization Baghouse Stacks**	Normal ☒	Abnormal ☐	0640
25	No. 1 BOP Flux Handling System Baghouse No. 3 Vent	Normal ☒	Abnormal ☐	0645
26	No. 2 QBOP 116' Flux Handling System Baghouse Stack (North)	Normal ☒	Abnormal ☐	0718
27	No. 2 QBOP 116' Flux Handling System Baghouse Stack (South)	Normal ☒	Abnormal ☐	0715
28	No. 2 QBOP 166' Flux Handling System Baghouse (Center)	Normal ☒	Abnormal ☐	0727
29	No. 2 QBOP 166' Flux Handling System Baghouse (North)	Normal ☒	Abnormal ☐	0724
30	No. 2 QBOP 166' Flux Handling System Baghouse (South)	Normal ☒	Abnormal ☐	0729
31	No. 2 QBOP Day Tank Lime Silo Baghouse Stack	Normal ☒	Abnormal ☐	0655
32	**No. 2 QBOP Desulfurization Baghouse Stacks**	Normal ☒	Abnormal ☐	1203
33	**No. 2 QBOP LMF No. 1 Baghouse Stacks**	Normal ☒	Abnormal ☐	0810
34	**No. 2 QBOP LMF No. 2 Baghouse Stacks**	Normal ☒	Abnormal ☐	0740
35	**No. 2 QBOP LMF No. 3 Baghouse Stacks**	Normal ☒	Abnormal ☐	0745
36	No. 2 QBOP Lime Dumping Station Baghouse Stack	Normal ☒	Abnormal ☐	0700
37	**No. 2 Q-BOP RH Vacuum Degasser Baghouse Stacks**	Normal ☒	Abnormal ☐	0815
38	**No. 2 Q-BOP PM10 Baghouse Stack**	Normal ☒	Abnormal ☐	1205

If the facility is not operating, put the time and SD (for source down) in the Time column.

Circle only the monitoring points below in bold that **you did not check** for any abnormal and visual conditions **while in operation**.

1 14 15 19 20 22 24 32 33 34 35 37 38

Source Audit 11106.doc

5-28

Iron and Steel Subsidiary Source Audit
USS Gary Works

Date: 12/04/07 Start Time: 0716
Inspector: [signature] End Time: 1342

	Monitor Point	Condition		Time
1	**No. 14 Blast Furnace Casthouse Baghouse Stack**	Normal ☑	Abnormal ☐	0831
2	No. 14 Blast Furnace Stockhouse	Normal ☑	Abnormal ☐	0836
3	No. 14 Blast Furnace Stoves Stack	Normal ☑	Abnormal ☐	1312
4	No. 14 Blast Furnace Top	Normal ☑	Abnormal ☐	
5	No. 4 Blast Furnace Stoves Stack	Normal ☑	Abnormal ☐	
6	No. 4 Blast Furnace Top	Normal ☑	Abnormal ☐	
7	No. 6 Blast Furnace Stoves Stack	Normal ☑	Abnormal ☐	SD
8	No. 6 Blast Furnace Top	Normal ☑	Abnormal ☐	SD
9	No. 8 Blast Furnace Stoves Stack	Normal ☑	Abnormal ☐	SD
10	No. 8 Blast Furnace Top	Normal ☑	Abnormal ☐	1342 SD
11	Process Vessel Maintenance Facility	Normal ☑	Abnormal ☐	0914
12	Sinter Plant Cooling Stack 1	Normal ☑	Abnormal ☐	1248
13	Sinter Plant Cooling Stack 3	Normal ☑	Abnormal ☐	1252
14	**Sinter Plant Discharge Area Baghouse Stack 1**	Normal ☑	Abnormal ☐	1239
15	**Sinter Plant Discharge Area Baghouse Stack 3**	Normal ☑	Abnormal ☐	1243
16	Sinter Plant S1-S2 Conveyor Baghouse Stack	Normal ☑	Abnormal ☐	1257
17	Sinter Plant Sinter Screening Station Baghouse Stack	Normal ☑	Abnormal ☐	1302
18	Sinter Plant Storage Bins Building Baghouse Stack	Normal ☑	Abnormal ☐	1306
19	**Sinter Plant Windbox Stack 1 (North)**	Normal ☑	Abnormal ☐	1230
20	**Sinter Plant Windbox Stack 2 (South)**	Normal ☑	Abnormal ☐	1234
21	TBBH No. 4A Boiler	Normal ☑	Abnormal ☐	0909
22	**No. 1 BOP CASBell/OB Lancing Station Baghouse Stacks**	Normal ☑	Abnormal ☐	0929
23	No. 1 BOP Iron Desulfurization Building Fugitive Emissions	Normal ☑	Abnormal ☐	0924
24	**No. 1 BOP Desulfurization Baghouse Stacks**	Normal ☑	Abnormal ☐	0919
25	No. 1 BOP Flux Handling System Baghouse No. 3 Vent	Normal ☑	Abnormal ☐	0932
26	No. 2 QBOP 116' Flux Handling System Baghouse Stack (North)	Normal ☑	Abnormal ☐	0720
27	No. 2 QBOP 116' Flux Handling System Baghouse Stack (South)	Normal ☑	Abnormal ☐	0716
28	No. 2 QBOP 166' Flux Handling System Baghouse (Center)	Normal ☑	Abnormal ☐	0730
29	No. 2 QBOP 166' Flux Handling System Baghouse (North)	Normal ☑	Abnormal ☐	0726
30	No. 2 QBOP 166' Flux Handling System Baghouse (South)	Normal ☑	Abnormal ☐	0734
31	No. 2 QBOP Day Tank Lime Silo Baghouse Stack	Normal ☑	Abnormal ☐	0738
32	**No. 2 QBOP Desulfurization Baghouse Stacks**	Normal ☑	Abnormal ☐	0937
33	**No. 2 QBOP LMF No. 1 Baghouse Stacks**	Normal ☑	Abnormal ☐	0753
34	**No. 2 QBOP LMF No. 2 Baghouse Stacks**	Normal ☑	Abnormal ☐	0757
35	**No. 2 QBOP LMF No. 3 Baghouse Stacks**	Normal ☑	Abnormal ☐	0801
36	No. 2 QBOP Lime Dumping Station Baghouse Stack	Normal ☑	Abnormal ☐	0741
37	**No. 2 Q-BOP RH Vacuum Degasser Baghouse Stacks**	Normal ☑	Abnormal ☐	0811
38	**No. 2 Q-BOP PM10 Baghouse Stack**	Normal ☑	Abnormal ☐	0815

If the facility is not operating, put the time and SD (for source down) in the Time column.

Circle only the monitoring points below in bold that **you did not check** for any abnormal and visual conditions **while in operation**.

1 14 15 19 20 22 24 32 33 34 35 37 38

5-2

Iron and Steel Subsidiary Source Audit
USS Gary Works

Date: 11/13/07
Inspector: [illegible]

Start Time: 0704
End Time: 1308

	Monitor Point	Condition		Time
1	**No. 14 Blast Furnace Casthouse Baghouse Stack**	Normal ☑	Abnormal ☐	0835
2	No. 14 Blast Furnace Stockhouse	Normal ☑	Abnormal ☐	0845
3	No. 14 Blast Furnace Stoves Stack	Normal ☑	Abnormal ☐	1238
4	No. 14 Blast Furnace Top	Normal ☑	Abnormal ☐	1308
5	No. 4 Blast Furnace Stoves Stack	Normal ☑	Abnormal ☐	
6	No. 4 Blast Furnace Top	Normal ☑	Abnormal ☐	
7	No. 6 Blast Furnace Stoves Stack	Normal ☑	Abnormal ☐	SD
8	No. 6 Blast Furnace Top	Normal ☑	Abnormal ☐	SD
9	No. 8 Blast Furnace Stoves Stack	Normal ☑	Abnormal ☐	
10	No. 8 Blast Furnace Top	Normal ☑	Abnormal ☐	
11	Process Vessel Maintenance Facility	Normal ☑	Abnormal ☐	0955
12	Sinter Plant Cooling Stack 1	Normal ☑	Abnormal ☐	1108
13	Sinter Plant Cooling Stack 3	Normal ☑	Abnormal ☐	1117
14	**Sinter Plant Discharge Area Baghouse Stack 1**	Normal ☑	Abnormal ☐	1112
15	**Sinter Plant Discharge Area Baghouse Stack 3**	Normal ☑	Abnormal ☐	1121
16	Sinter Plant S1-S2 Conveyor Baghouse Stack	Normal ☑	Abnormal ☐	1124
17	Sinter Plant Sinter Screening Station Baghouse Stack	Normal ☑	Abnormal ☐	1127
18	Sinter Plant Storage Bins Building Baghouse Stack	Normal ☑	Abnormal ☐	1131
19	**Sinter Plant Windbox Stack 1 (North)**	Normal ☑	Abnormal ☐	1134
20	**Sinter Plant Windbox Stack 2 (South)**	Normal ☑	Abnormal ☐	1139
21	TBBH No. 4A Boiler	Normal ☑	Abnormal ☐	0930
22	**No. 1 BOP CASBell/OB Lancing Station Baghouse Stacks**	Normal ☑	Abnormal ☐	1014
23	No. 1 BOP Iron Desulfurization Building Fugitive Emissions	Normal ☑	Abnormal ☐	1008
24	**No. 1 BOP Desulfurization Baghouse Stacks**	Normal ☑	Abnormal ☐	1002
25	No. 1 BOP Flux Handling System Baghouse No. 3 Vent	Normal ☑	Abnormal ☐	1017
26	No. 2 QBOP 116' Flux Handling System Baghouse Stack (North)	Normal ☑	Abnormal ☐	0719
27	No. 2 QBOP 116' Flux Handling System Baghouse Stack (South)	Normal ☑	Abnormal ☐	0715
28	No. 2 QBOP 166' Flux Handling System Baghouse (Center)	Normal ☑	Abnormal ☐	0728
29	No. 2 QBOP 166' Flux Handling System Baghouse (North)	Normal ☑	Abnormal ☐	0724
30	No. 2 QBOP 166' Flux Handling System Baghouse (South)	Normal ☑	Abnormal ☐	0733
31	No. 2 QBOP Day Tank Lime Silo Baghouse Stack	Normal ☑	Abnormal ☐	0709
32	**No. 2 QBOP Desulfurization Baghouse Stacks**	Normal ☑	Abnormal ☐	0938
33	**No. 2 QBOP LMF No. 1 Baghouse Stacks**	Normal ☑	Abnormal ☐	0759
34	**No. 2 QBOP LMF No. 2 Baghouse Stacks**	Normal ☑	Abnormal ☐	0803
35	**No. 2 QBOP LMF No. 3 Baghouse Stacks**	Normal ☑	Abnormal ☐	0808
36	No. 2 QBOP Lime Dumping Station Baghouse Stack	Normal ☑	Abnormal ☐	0704
37	**No. 2 Q-BOP RH Vacuum Degasser Baghouse Stacks**	Normal ☑	Abnormal ☐	0822
38	**No. 2 Q-BOP PM10 Baghouse Stack**	Normal ☑	Abnormal ☐	0826

If the facility is not operating, put the time and SD (for source down) in the Time column.

Circle only the monitoring points below in bold that **you did not check** for any abnormal and visual conditions **while in operation**.

1 14 15 19 20 22 24 32 33 34 35 37 38

5-22

Iron and Steel Subsidiary Source Audit
USS Gary Works

Date: 11/18/07
Inspector: Lorenzo Patterson

Start Time: 0727
End Time: 1350

	Monitor Point	Condition		Time
1	**No. 14 Blast Furnace Casthouse Baghouse Stack**	Normal ☑	Abnormal ☐	1038
2	No. 14 Blast Furnace Stockhouse	Normal ☑	Abnormal ☐	1058
3	No. 14 Blast Furnace Stoves Stack	Normal ☑	Abnormal ☐	1330
4	No. 14 Blast Furnace Top	Normal ☑	Abnormal ☐	1334
5	No. 4 Blast Furnace Stoves Stack	Normal ☑	Abnormal ☐	1350
6	No. 4 Blast Furnace Top	Normal ☑	Abnormal ☐	1344
7	No. 6 Blast Furnace Stoves Stack	Normal ☑	Abnormal ☐	SD
8	No. 6 Blast Furnace Top	Normal ☑	Abnormal ☐	SD
9	No. 8 Blast Furnace Stoves Stack	Normal ☑	Abnormal ☐	1340
10	No. 8 Blast Furnace Top	Normal ☑	Abnormal ☐	1337
11	Process Vessel Maintenance Facility	Normal ☑	Abnormal ☐	1158
12	Sinter Plant Cooling Stack 1	Normal ☑	Abnormal ☐	1224
13	Sinter Plant Cooling Stack 3	Normal ☑	Abnormal ☐	1226
14	**Sinter Plant Discharge Area Baghouse Stack 1**	Normal ☑	Abnormal ☐	1231
15	**Sinter Plant Discharge Area Baghouse Stack 3**	Normal ☑	Abnormal ☐	1235
16	Sinter Plant S1-S2 Conveyor Baghouse Stack	Normal ☑	Abnormal ☐	1240
17	Sinter Plant Sinter Screening Station Baghouse Stack	Normal ☑	Abnormal ☐	1246
18	Sinter Plant Storage Bins Building Baghouse Stack	Normal ☑	Abnormal ☐	1250
19	**Sinter Plant Windbox Stack 1 (North)**	Normal ☑	Abnormal ☐	1322
20	**Sinter Plant Windbox Stack 2 (South)**	Normal ☑	Abnormal ☐	1325
21	TBBH No. 4A Boiler	Normal ☑	Abnormal ☐	1152
22	**No. 1 BOP CASBell/OB Lancing Station Baghouse Stacks**	Normal ☑	Abnormal ☐	1211
23	No. 1 BOP Iron Desulfurization Building Fugitive Emissions	Normal ☑	Abnormal ☐	1205
24	**No. 1 BOP Desulfurization Baghouse Stacks**	Normal ☑	Abnormal ☐	1200
25	No. 1 BOP Flux Handling System Baghouse No. 3 Vent	Normal ☑	Abnormal ☐	1217
26	No. 2 QBOP 116' Flux Handling System Baghouse Stack (North)	Normal ☑	Abnormal ☐	0736
27	No. 2 QBOP 116' Flux Handling System Baghouse Stack (South)	Normal ☑	Abnormal ☐	0740
28	No. 2 QBOP 166' Flux Handling System Baghouse (Center)	Normal ☑	Abnormal ☐	0747
29	No. 2 QBOP 166' Flux Handling System Baghouse (North)	Normal ☑	Abnormal ☐	0751
30	No. 2 QBOP 166' Flux Handling System Baghouse (South)	Normal ☑	Abnormal ☐	0743
31	No. 2 QBOP Day Tank Lime Silo Baghouse Stack	Normal ☑	Abnormal ☐	0730
32	**No. 2 QBOP Desulfurization Baghouse Stacks**	Normal ☑	Abnormal ☐	1044
33	**No. 2 QBOP LMF No. 1 Baghouse Stacks**	Normal ☑	Abnormal ☐	1003
34	**No. 2 QBOP LMF No. 2 Baghouse Stacks**	Normal ☑	Abnormal ☐	1011
35	**No. 2 QBOP LMF No. 3 Baghouse Stacks**	Normal ☑	Abnormal ☐	1015
36	No. 2 QBOP Lime Dumping Station Baghouse Stack	Normal ☑	Abnormal ☐	0727
37	**No. 2 Q-BOP RH Vacuum Degasser Baghouse Stacks**	Normal ☑	Abnormal ☐	1022
38	**No. 2 Q-BOP PM10 Baghouse Stack**	Normal ☑	Abnormal ☐	1027

If the facility is not operating, put the time and SD (for source down) in the Time column.

Circle only the monitoring points below in bold that **you did not check** for any abnormal and visual conditions **while in operation**.

1 14 15 19 20 22 24 32 33 34 35 37 38

Source Audit 11106.doc

5-23

Iron and Steel Subsidiary Source Audit
USS Gary Works

Date: 11/14/07 Start Time: 0630
Inspector: A. RICHARDSON End Time: 13 30

	Monitor Point	Condition		Time
1	**No. 14 Blast Furnace Casthouse Baghouse Stack**	Normal ☒	Abnormal ☐	0850
2	No. 14 Blast Furnace Stockhouse	Normal ☒	Abnormal ☐	0930
3	No. 14 Blast Furnace Stoves Stack	Normal ☒	Abnormal ☐	1210
4	No. 14 Blast Furnace Top	Normal ☒	Abnormal ☐	1225
5	No. 4 Blast Furnace Stoves Stack	Normal ☒	Abnormal ☐	1148
6	No. 4 Blast Furnace Top	Normal ☒	Abnormal ☐	1153
7	No. 6 Blast Furnace Stoves Stack	Normal ☒	Abnormal ☐	1159. SD
8	No. 6 Blast Furnace Top	Normal ☒	Abnormal ☐	1205 SD
9	No. 8 Blast Furnace Stoves Stack	Normal ☒	Abnormal ☐	1210
10	No. 8 Blast Furnace Top	Normal ☒	Abnormal ☐	1214
11	Process Vessel Maintenance Facility	Normal ☒	Abnormal ☐	1230
12	Sinter Plant Cooling Stack 1	Normal ☒	Abnormal ☐	1050
13	Sinter Plant Cooling Stack 3	Normal ☒	Abnormal ☐	1055
14	**Sinter Plant Discharge Area Baghouse Stack 1**	Normal ☒	Abnormal ☐	1100
15	**Sinter Plant Discharge Area Baghouse Stack 3**	Normal ☒	Abnormal ☐	1103
16	Sinter Plant S1-S2 Conveyor Baghouse Stack	Normal ☒	Abnormal ☐	1110
17	Sinter Plant Sinter Screening Station Baghouse Stack	Normal ☒	Abnormal ☐	1115
18	Sinter Plant Storage Bins Building Baghouse Stack	Normal ☒	Abnormal ☐	1120
19	**Sinter Plant Windbox Stack 1 (North)**	Normal ☒	Abnormal ☐	1142
20	**Sinter Plant Windbox Stack 2 (South)**	Normal ☒	Abnormal ☐	1144
21	TBBH No. 4A Boiler	Normal ☒	Abnormal ☐	0840
22	**No. 1 BOP CASBell/OB Lancing Station Baghouse Stacks**	Normal ☒	Abnormal ☐	0630
23	No. 1 BOP Iron Desulfurization Building Fugitive Emissions	Normal ☒	Abnormal ☐	0635
24	**No. 1 BOP Desulfurization Baghouse Stacks**	Normal ☒	Abnormal ☐	0640
25	No. 1 BOP Flux Handling System Baghouse No. 3 Vent	Normal ☒	Abnormal ☐	0645
26	No. 2 QBOP 116' Flux Handling System Baghouse Stack (North)	Normal ☒	Abnormal ☐	0718
27	No. 2 QBOP 116' Flux Handling System Baghouse Stack (South)	Normal ☒	Abnormal ☐	0715
28	No. 2 QBOP 166' Flux Handling System Baghouse (Center)	Normal ☒	Abnormal ☐	0727
29	No. 2 QBOP 166' Flux Handling System Baghouse (North)	Normal ☒	Abnormal ☐	0725
30	No. 2 QBOP 166' Flux Handling System Baghouse (South)	Normal ☒	Abnormal ☐	0729
31	No. 2 QBOP Day Tank Lime Silo Baghouse Stack	Normal ☒	Abnormal ☐	0705
32	**No. 2 QBOP Desulfurization Baghouse Stacks**	Normal ☒	Abnormal ☐	0940
33	**No. 2 QBOP LMF No. 1 Baghouse Stacks**	Normal ☒	Abnormal ☐	0748
34	**No. 2 QBOP LMF No. 2 Baghouse Stacks**	Normal ☒	Abnormal ☐	0738
35	**No. 2 QBOP LMF No. 3 Baghouse Stacks**	Normal ☒	Abnormal ☐	0740
36	No. 2 QBOP Lime Dumping Station Baghouse Stack	Normal ☒	Abnormal ☐	0700
37	**No. 2 Q-BOP RH Vacuum Degasser Baghouse Stacks**	Normal ☒	Abnormal ☐	0750
38	**No. 2 Q-BOP PM10 Baghouse Stack**	Normal ☒	Abnormal ☐	0945

If the facility is not operating, put the time and SD (for source down) in the Time column.

Circle only the monitoring points below in bold that **you did not check** for any abnormal and visual conditions **while in operation**.

1 14 15 19 20 22 24 32 33 34 35 37 38

5-24

Iron and Steel Subsidiary Source Audit
USS Gary Works

Date: 11/21/07 Start Time: 0630
Inspector: A. RICHARDSON End Time: 1330

	Monitor Point	Condition		Time
1	**No. 14 Blast Furnace Casthouse Baghouse Stack**	Normal ☒	Abnormal ☐	0900
2	No. 14 Blast Furnace Stockhouse	Normal ☒	Abnormal ☐	0937
3	No. 14 Blast Furnace Stoves Stack	Normal ☒	Abnormal ☐	1304
4	No. 14 Blast Furnace Top	Normal ☒	Abnormal ☐	1310
5	No. 4 Blast Furnace Stoves Stack	Normal ☒	Abnormal ☐	1252
6	No. 4 Blast Furnace Top	Normal ☒	Abnormal ☐	1258
7	No. 6 Blast Furnace Stoves Stack	Normal ☒	Abnormal ☐	SD 1320
8	No. 6 Blast Furnace Top	Normal ☒	Abnormal ☐	SD 1328
9	No. 8 Blast Furnace Stoves Stack	Normal ☒	Abnormal ☐	1240
10	No. 8 Blast Furnace Top	Normal ☒	Abnormal ☐	1246
11	Process Vessel Maintenance Facility	Normal ☒	Abnormal ☐	1315
12	Sinter Plant Cooling Stack 1	Normal ☒	Abnormal ☐	1150
13	Sinter Plant Cooling Stack 3	Normal ☒	Abnormal ☐	1152
14	**Sinter Plant Discharge Area Baghouse Stack 1**	Normal ☒	Abnormal ☐	1200
15	**Sinter Plant Discharge Area Baghouse Stack 3**	Normal ☒	Abnormal ☐	1202
16	Sinter Plant S1-S2 Conveyor Baghouse Stack	Normal ☒	Abnormal ☐	1210
17	Sinter Plant Sinter Screening Station Baghouse Stack	Normal ☒	Abnormal ☐	1218
18	Sinter Plant Storage Bins Building Baghouse Stack	Normal ☒	Abnormal ☐	1224
19	**Sinter Plant Windbox Stack 1 (North)**	Normal ☒	Abnormal ☐	1232
20	**Sinter Plant Windbox Stack 2 (South)**	Normal ☒	Abnormal ☐	1234
21	TBBH No. 4A Boiler	Normal ☒	Abnormal ☐	0845
22	**No. 1 BOP CASBell/OB Lancing Station Baghouse Stacks**	Normal ☒	Abnormal ☐	1043
23	No. 1 BOP Iron Desulfurization Building Fugitive Emissions	Normal ☒	Abnormal ☐	1048
24	**No. 1 BOP Desulfurization Baghouse Stacks**	Normal ☒	Abnormal ☐	1054
25	No. 1 BOP Flux Handling System Baghouse No. 3 Vent	Normal ☒	Abnormal ☐	1100
26	No. 2 QBOP 116' Flux Handling System Baghouse Stack (North)	Normal ☒	Abnormal ☐	0720
27	No. 2 QBOP 116' Flux Handling System Baghouse Stack (South)	Normal ☒	Abnormal ☐	0718
28	No. 2 QBOP 166' Flux Handling System Baghouse (Center)	Normal ☒	Abnormal ☐	0730
29	No. 2 QBOP 166' Flux Handling System Baghouse (North)	Normal ☒	Abnormal ☐	0725
30	No. 2 QBOP 166' Flux Handling System Baghouse (South)	Normal ☒	Abnormal ☐	0735
31	No. 2 QBOP Day Tank Lime Silo Baghouse Stack	Normal ☒	Abnormal ☐	0630
32	**No. 2 QBOP Desulfurization Baghouse Stacks**	Normal ☒	Abnormal ☐	0957
33	**No. 2 QBOP LMF No. 1 Baghouse Stacks**	Normal ☒	Abnormal ☐	0830
34	**No. 2 QBOP LMF No. 2 Baghouse Stacks**	Normal ☒	Abnormal ☐	0805
35	**No. 2 QBOP LMF No. 3 Baghouse Stacks**	Normal ☒	Abnormal ☐	0810
36	No. 2 QBOP Lime Dumping Station Baghouse Stack	Normal ☒	Abnormal ☐	0633
37	**No. 2 Q-BOP RH Vacuum Degasser Baghouse Stacks**	Normal ☒	Abnormal ☐	0835
38	**No. 2 Q-BOP PM10 Baghouse Stack**	Normal ☒	Abnormal ☐	1000

If the facility is not operating, put the time and SD (for source down) in the Time column.

Circle only the monitoring points below in bold that <u>you did not check</u> for any abnormal and visual conditions <u>while in operation</u>.

1 14 15 19 20 22 24 32 33 34 35 37 38

5-25

Iron and Steel Subsidiary Source Audit
USS Gary Works

Date: 12/07/07
Inspector: A. RICHARDSON

Start Time: 0645
End Time: 1230

	Monitor Point	Condition		Time
1	**No. 14 Blast Furnace Casthouse Baghouse Stack**	Normal ☒	Abnormal ☐	0920
2	No. 14 Blast Furnace Stockhouse	Normal ☒	Abnormal ☐	0930
3	No. 14 Blast Furnace Stoves Stack	Normal ☒	Abnormal ☐	1144
4	No. 14 Blast Furnace Top	Normal ☒	Abnormal ☐	1158
5	No. 4 Blast Furnace Stoves Stack	Normal ☒	Abnormal ☐	1120
6	No. 4 Blast Furnace Top	Normal ☒	Abnormal ☐	1126
7	No. 6 Blast Furnace Stoves Stack	Normal ☒	Abnormal ☐	SD. 1155
8	No. 6 Blast Furnace Top	Normal ☒	Abnormal ☐	SD 1200
9	No. 8 Blast Furnace Stoves Stack	Normal ☒	Abnormal ☐	1132
10	No. 8 Blast Furnace Top	Normal ☒	Abnormal ☐	1138
11	Process Vessel Maintenance Facility	Normal ☒	Abnormal ☐	1205
12	Sinter Plant Cooling Stack 1	Normal ☒	Abnormal ☐	1040
13	Sinter Plant Cooling Stack 3	Normal ☒	Abnormal ☐	1042
14	**Sinter Plant Discharge Area Baghouse Stack 1**	Normal ☒	Abnormal ☐	1047
15	**Sinter Plant Discharge Area Baghouse Stack 3**	Normal ☒	Abnormal ☐	1049
16	Sinter Plant S1-S2 Conveyor Baghouse Stack	Normal ☒	Abnormal ☐	1055
17	Sinter Plant Sinter Screening Station Baghouse Stack	Normal ☒	Abnormal ☐	1058
18	Sinter Plant Storage Bins Building Baghouse Stack	Normal ☒	Abnormal ☐	1105
19	**Sinter Plant Windbox Stack 1 (North)**	Normal ☒	Abnormal ☐	1110
20	**Sinter Plant Windbox Stack 2 (South)**	Normal ☒	Abnormal ☐	1112
21	TBBH No. 4A Boiler	Normal ☒	Abnormal ☐	0910
22	**No. 1 BOP CASBell/OB Lancing Station Baghouse Stacks**	Normal ☒	Abnormal ☐	0645
23	No. 1 BOP Iron Desulfurization Building Fugitive Emissions	Normal ☒	Abnormal ☐	0650
24	**No. 1 BOP Desulfurization Baghouse Stacks**	Normal ☒	Abnormal ☐	0655
25	No. 1 BOP Flux Handling System Baghouse No. 3 Vent	Normal ☒	Abnormal ☐	0700
26	No. 2 QBOP 116' Flux Handling System Baghouse Stack (North)	Normal ☒	Abnormal ☐	0736
27	No. 2 QBOP 116' Flux Handling System Baghouse Stack (South)	Normal ☒	Abnormal ☐	0730
28	No. 2 QBOP 166' Flux Handling System Baghouse (Center)	Normal ☒	Abnormal ☐	0733
29	No. 2 QBOP 166' Flux Handling System Baghouse (North)	Normal ☒	Abnormal ☐	0735
30	No. 2 QBOP 166' Flux Handling System Baghouse (South)	Normal ☒	Abnormal ☐	0738
31	No. 2 QBOP Day Tank Lime Silo Baghouse Stack	Normal ☒	Abnormal ☐	0715
32	**No. 2 QBOP Desulfurization Baghouse Stacks**	Normal ☒	Abnormal ☐	0940
33	**No. 2 QBOP LMF No. 1 Baghouse Stacks**	Normal ☒	Abnormal ☐	0845
34	**No. 2 QBOP LMF No. 2 Baghouse Stacks**	Normal ☒	Abnormal ☐	0800
35	**No. 2 QBOP LMF No. 3 Baghouse Stacks**	Normal ☒	Abnormal ☐	0805
36	No. 2 QBOP Lime Dumping Station Baghouse Stack	Normal ☒	Abnormal ☐	0710
37	**No. 2 Q-BOP RH Vacuum Degasser Baghouse Stacks**	Normal ☒	Abnormal ☐	0850
38	**No. 2 Q-BOP PM10 Baghouse Stack**	Normal ☒	Abnormal ☐	0945

If the facility is not operating, put the time and SD (for source down) in the Time column.

Circle only the monitoring points below in bold that **you did not check** for any abnormal and visual conditions **while in operation**.

1 14 15 19 20 22 24 32 33 34 35 37 38

S-26

Iron and Steel Subsidiary Source Audit
USS Gary Works

Date: 11/26/07 Start Time: 0630
Inspector: ALEX RICHARDSON End Time: 1230

	Monitor Point	Condition		Time
1	**No. 14 Blast Furnace Casthouse Baghouse Stack**	Normal ☒	Abnormal ☐	1120
2	No. 14 Blast Furnace Stockhouse	Normal ☒	Abnormal ☐	1140
3	No. 14 Blast Furnace Stoves Stack	Normal ☒	Abnormal ☐	0840
4	No. 14 Blast Furnace Top	Normal ☒	Abnormal ☐	0846
5	No. 4 Blast Furnace Stoves Stack	Normal ☒	Abnormal ☐	0810
6	No. 4 Blast Furnace Top	Normal ☒	Abnormal ☐	0816
7	No. 6 Blast Furnace Stoves Stack	Normal ☒	Abnormal ☐	SD 0820
8	No. 6 Blast Furnace Top	Normal ☒	Abnormal ☐	SD 0827
9	No. 8 Blast Furnace Stoves Stack	Normal ☒	Abnormal ☐	0828
10	No. 8 Blast Furnace Top	Normal ☒	Abnormal ☐	0834
11	Process Vessel Maintenance Facility	Normal ☒	Abnormal ☐	0850
12	Sinter Plant Cooling Stack 1	Normal ☒	Abnormal ☐	0645
13	Sinter Plant Cooling Stack 3	Normal ☒	Abnormal ☐	0647
14	**Sinter Plant Discharge Area Baghouse Stack 1**	Normal ☒	Abnormal ☐	0653
15	**Sinter Plant Discharge Area Baghouse Stack 3**	Normal ☒	Abnormal ☐	0655
16	Sinter Plant S1-S2 Conveyor Baghouse Stack	Normal ☒	Abnormal ☐	0705
17	Sinter Plant Sinter Screening Station Baghouse Stack	Normal ☒	Abnormal ☐	0715
18	Sinter Plant Storage Bins Building Baghouse Stack	Normal ☒	Abnormal ☐	0721
19	**Sinter Plant Windbox Stack 1 (North)**	Normal ☒	Abnormal ☐	0748
20	**Sinter Plant Windbox Stack 2 (South)**	Normal ☒	Abnormal ☐	0747
21	TBBH No. 4A Boiler	Normal ☒	Abnormal ☐	1106
22	**No. 1 BOP CASBell/OB Lancing Station Baghouse Stacks**	Normal ☒	Abnormal ☐	0924
23	No. 1 BOP Iron Desulfurization Building Fugitive Emissions	Normal ☒	Abnormal ☐	0929
24	**No. 1 BOP Desulfurization Baghouse Stacks**	Normal ☒	Abnormal ☐	0937
25	No. 1 BOP Flux Handling System Baghouse No. 3 Vent	Normal ☒	Abnormal ☐	0938
26	No. 2 QBOP 116' Flux Handling System Baghouse Stack (North)	Normal ☒	Abnormal ☐	1011
27	No. 2 QBOP 116' Flux Handling System Baghouse Stack (South)	Normal ☒	Abnormal ☐	1008
28	No. 2 QBOP 166' Flux Handling System Baghouse (Center)	Normal ☒	Abnormal ☐	1019
29	No. 2 QBOP 166' Flux Handling System Baghouse (North)	Normal ☒	Abnormal ☐	1016
30	No. 2 QBOP 166' Flux Handling System Baghouse (South)	Normal ☒	Abnormal ☐	1018
31	No. 2 QBOP Day Tank Lime Silo Baghouse Stack	Normal ☒	Abnormal ☐	0953
32	**No. 2 QBOP Desulfurization Baghouse Stacks**	Normal ☒	Abnormal ☐	1145
33	**No. 2 QBOP LMF No. 1 Baghouse Stacks**	Normal ☒	Abnormal ☐	1048
34	**No. 2 QBOP LMF No. 2 Baghouse Stacks**	Normal ☒	Abnormal ☐	1035
35	**No. 2 QBOP LMF No. 3 Baghouse Stacks**	Normal ☒	Abnormal ☐	1030
36	No. 2 QBOP Lime Dumping Station Baghouse Stack	Normal ☒	Abnormal ☐	0948
37	**No. 2 Q-BOP RH Vacuum Degasser Baghouse Stacks**	Normal ☒	Abnormal ☐	1045
38	**No. 2 Q-BOP PM10 Baghouse Stack**	Normal ☒	Abnormal ☐	1130

If the facility is not operating, put the time and SD (for source down) in the Time column.

Circle only the monitoring points below in bold that **you did not check** for any abnormal and visual conditions **while in operation**.

1 14 15 19 20 22 24 32 33 34 35 37 38

5-27

Iron and Steel Subsidiary Source Audit
USS Gary Works

Date: ~~11-11-08~~ 11-25-07 Start Time: 0733
Inspector: J. SPALK End Time: 1424

	Monitor Point	Condition		Time
1	**No. 14 Blast Furnace Casthouse Baghouse Stack**	Normal ☑	Abnormal ☐	1223
2	No. 14 Blast Furnace Stockhouse	Normal ☑	Abnormal ☐	1214
3	No. 14 Blast Furnace Stoves Stack	Normal ☑	Abnormal ☐	1228
4	No. 14 Blast Furnace Top	Normal ☑	Abnormal ☐	1233-SD
5	No. 4 Blast Furnace Stoves Stack	Normal ☑	Abnormal ☐	1251
6	No. 4 Blast Furnace Top	Normal ☑	Abnormal ☐	1256
7	No. 6 Blast Furnace Stoves Stack	Normal ☑	Abnormal ☐	SD-1301
8	No. 6 Blast Furnace Top	Normal ☑	Abnormal ☐	SD 1304
9	No. 8 Blast Furnace Stoves Stack	Normal ☑	Abnormal ☐	1309
10	No. 8 Blast Furnace Top	Normal ☑	Abnormal ☐	1314
11	Process Vessel Maintenance Facility	Normal ☑	Abnormal ☐	0903
12	Sinter Plant Cooling Stack 1	Normal ☑	Abnormal ☐	1346
13	Sinter Plant Cooling Stack 3	Normal ☑	Abnormal ☐	1351
14	**Sinter Plant Discharge Area Baghouse Stack 1**	Normal ☑	Abnormal ☐	1402
15	**Sinter Plant Discharge Area Baghouse Stack 3**	Normal ☑	Abnormal ☐	1356
16	Sinter Plant S1-S2 Conveyor Baghouse Stack	Normal ☑	Abnormal ☐	1407
17	Sinter Plant Sinter Screening Station Baghouse Stack	Normal ☑	Abnormal ☐	1413
18	Sinter Plant Storage Bins Building Baghouse Stack	Normal ☑	Abnormal ☐	1419
19	**Sinter Plant Windbox Stack 1 (North)**	Normal ☑	Abnormal ☐	0738
20	**Sinter Plant Windbox Stack 2 (South)**	Normal ☑	Abnormal ☐	0733
21	TBBH No. 4A Boiler	Normal ☑	Abnormal ☐	1147
22	**No. 1 BOP CASBell/OB Lancing Station Baghouse Stacks**	Normal ☑	Abnormal ☐	0919
23	No. 1 BOP Iron Desulfurization Building Fugitive Emissions	Normal ☑	Abnormal ☐	0924
24	**No. 1 BOP Desulfurization Baghouse Stacks**	Normal ☑	Abnormal ☐	0930
25	No. 1 BOP Flux Handling System Baghouse No. 3 Vent	Normal ☑	Abnormal ☐	0914
26	No. 2 QBOP 116' Flux Handling System Baghouse Stack (North)	Normal ☑	Abnormal ☐	1034
27	No. 2 QBOP 116' Flux Handling System Baghouse Stack (South)	Normal ☑	Abnormal ☐	1039
28	No. 2 QBOP 166' Flux Handling System Baghouse (Center)	Normal ☑	Abnormal ☐	1022
29	No. 2 QBOP 166' Flux Handling System Baghouse (North)	Normal ☑	Abnormal ☐	1029
30	No. 2 QBOP 166' Flux Handling System Baghouse (South)	Normal ☑	Abnormal ☐	1018
31	No. 2 QBOP Day Tank Lime Silo Baghouse Stack	Normal ☑	Abnormal ☐	1156
32	**No. 2 QBOP Desulfurization Baghouse Stacks**	Normal ☑	Abnormal ☐	1206
33	**No. 2 QBOP LMF No. 1 Baghouse Stacks**	Normal ☑	Abnormal ☐	1117
34	**No. 2 QBOP LMF No. 2 Baghouse Stacks**	Normal ☑	Abnormal ☐	1103
35	**No. 2 QBOP LMF No. 3 Baghouse Stacks**	Normal ☑	Abnormal ☐	1108
36	No. 2 QBOP Lime Dumping Station Baghouse Stack	Normal ☑	Abnormal ☐	0956
37	**No. 2 Q-BOP RH Vacuum Degasser Baghouse Stacks**	Normal ☑	Abnormal ☐	1122
38	**No. 2 Q-BOP PM10 Baghouse Stack**	Normal ☑	Abnormal ☐	1201

If the facility is not operating, put the time and SD (for source down) in the Time column.

Circle only the monitoring points below in bold that **you did not check** for any abnormal and visual conditions **while in operation**.

1 14 15 19 20 22 24 32 33 34 35 37 38

5-28

Iron and Steel Subsidiary Source Audit
USS Gary Works

Date: 11/29/07 Start Time: 0630
Inspector: A. RICHARDSON End Time: 1448

	Monitor Point	Condition		Time
1	**No. 14 Blast Furnace Casthouse Baghouse Stack**	Normal ☒	Abnormal ☐	1230
2	No. 14 Blast Furnace Stockhouse	Normal ☒	Abnormal ☐	1255
3	No. 14 Blast Furnace Stoves Stack	Normal ☒	Abnormal ☐	1432
4	No. 14 Blast Furnace Top	Normal ☒	Abnormal ☐	1436
5	No. 4 Blast Furnace Stoves Stack	Normal ☒	Abnormal ☐	1420
6	No. 4 Blast Furnace Top	Normal ☒	Abnormal ☐	1426
7	No. 6 Blast Furnace Stoves Stack	Normal ☒	Abnormal ☐	1438 SD
8	No. 6 Blast Furnace Top	Normal ☒	Abnormal ☐	1439 SD
9	No. 8 Blast Furnace Stoves Stack	Normal ☒	Abnormal ☐	1408
10	No. 8 Blast Furnace Top	Normal ☒	Abnormal ☐	1413
11	Process Vessel Maintenance Facility	Normal ☒	Abnormal ☐	1442
12	Sinter Plant Cooling Stack 1	Normal ☒	Abnormal ☐	1310
13	Sinter Plant Cooling Stack 3	Normal ☒	Abnormal ☐	1313
14	**Sinter Plant Discharge Area Baghouse Stack 1**	Normal ☒	Abnormal ☐	1318
15	**Sinter Plant Discharge Area Baghouse Stack 3**	Normal ☒	Abnormal ☐	1321
16	Sinter Plant S1-S2 Conveyor Baghouse Stack	Normal ☒	Abnormal ☐	1335
17	Sinter Plant Sinter Screening Station Baghouse Stack	Normal ☒	Abnormal ☐	1340
18	Sinter Plant Storage Bins Building Baghouse Stack	Normal ☒	Abnormal ☐	1345
19	**Sinter Plant Windbox Stack 1 (North)**	Normal ☒	Abnormal ☐	1355
20	**Sinter Plant Windbox Stack 2 (South)**	Normal ☒	Abnormal ☐	1358
21	TBBH No. 4A Boiler	Normal ☒	Abnormal ☐	0855
22	**No. 1 BOP CASBell/OB Lancing Station Baghouse Stacks**	Normal ☒	Abnormal ☐	0645
23	No. 1 BOP Iron Desulfurization Building Fugitive Emissions	Normal ☒	Abnormal ☐	0650
24	**No. 1 BOP Desulfurization Baghouse Stacks**	Normal ☒	Abnormal ☐	0655
25	No. 1 BOP Flux Handling System Baghouse No. 3 Vent	Normal ☒	Abnormal ☐	0700
26	No. 2 QBOP 116' Flux Handling System Baghouse Stack (North)	Normal ☒	Abnormal ☐	0733
27	No. 2 QBOP 116' Flux Handling System Baghouse Stack (South)	Normal ☒	Abnormal ☐	0730
28	No. 2 QBOP 166' Flux Handling System Baghouse (Center)	Normal ☒	Abnormal ☐	0741
29	No. 2 QBOP 166' Flux Handling System Baghouse (North)	Normal ☒	Abnormal ☐	0739
30	No. 2 QBOP 166' Flux Handling System Baghouse (South)	Normal ☒	Abnormal ☐	0744
31	No. 2 QBOP Day Tank Lime Silo Baghouse Stack	Normal ☒	Abnormal ☐	0715
32	**No. 2 QBOP Desulfurization Baghouse Stacks**	Normal ☒	Abnormal ☐	1300
33	**No. 2 QBOP LMF No. 1 Baghouse Stacks**	Normal ☒	Abnormal ☐	0835
34	**No. 2 QBOP LMF No. 2 Baghouse Stacks**	Normal ☒	Abnormal ☐	0815
35	**No. 2 QBOP LMF No. 3 Baghouse Stacks**	Normal ☒	Abnormal ☐	0820
36	No. 2 QBOP Lime Dumping Station Baghouse Stack	Normal ☒	Abnormal ☐	0710
37	**No. 2 Q-BOP RH Vacuum Degasser Baghouse Stacks**	Normal ☒	Abnormal ☐	0840
38	**No. 2 Q-BOP PM10 Baghouse Stack**	Normal ☒	Abnormal ☐	1305

If the facility is not operating, put the time and SD (for source down) in the Time column.

Circle only the monitoring points below in bold that **you did not check** for any abnormal and visual conditions **while in operation**.

1 14 15 19 20 22 24 32 33 34 35 37 38

5-29

Iron and Steel Subsidiary Source Audit
USS Gary Works

Date: 11/15/07 Start Time: 0630
Inspector: A. RICHARDSON End Time: 1230

	Monitor Point	Condition		Time
1	**No. 14 Blast Furnace Casthouse Baghouse Stack**	Normal ☒	Abnormal ☐	0910
2	No. 14 Blast Furnace Stockhouse	Normal ☒	Abnormal ☐	0925
3	No. 14 Blast Furnace Stoves Stack	Normal ☒	Abnormal ☐	SD 1130
4	No. 14 Blast Furnace Top	Normal ☒	Abnormal ☐	SD 1135
5	No. 4 Blast Furnace Stoves Stack	Normal ☒	Abnormal ☐	1040
6	No. 4 Blast Furnace Top	Normal ☒	Abnormal ☐	1046
7	No. 6 Blast Furnace Stoves Stack	Normal ☒	Abnormal ☐	1052 SD
8	No. 6 Blast Furnace Top	Normal ☒	Abnormal ☐	1100 SD
9	No. 8 Blast Furnace Stoves Stack	Normal ☒	Abnormal ☐	SD 1110
10	No. 8 Blast Furnace Top	Normal ☒	Abnormal ☐	SD 1120
11	Process Vessel Maintenance Facility	Normal ☒	Abnormal ☐	1224
12	Sinter Plant Cooling Stack 1	Normal ☒	Abnormal ☐	1145
13	Sinter Plant Cooling Stack 3	Normal ☒	Abnormal ☐	1147
14	**Sinter Plant Discharge Area Baghouse Stack 1**	Normal ☒	Abnormal ☐	1149
15	**Sinter Plant Discharge Area Baghouse Stack 3**	Normal ☒	Abnormal ☐	1201
16	Sinter Plant S1-S2 Conveyor Baghouse Stack	Normal ☒	Abnormal ☐	1204
17	Sinter Plant Sinter Screening Station Baghouse Stack	Normal ☒	Abnormal ☐	1210
18	Sinter Plant Storage Bins Building Baghouse Stack	Normal ☒	Abnormal ☐	1215
19	**Sinter Plant Windbox Stack 1 (North)**	Normal ☒	Abnormal ☐	1220
20	**Sinter Plant Windbox Stack 2 (South)**	Normal ☒	Abnormal ☐	1222
21	TBBH No. 4A Boiler	Normal ☒	Abnormal ☐	0848
22	**No. 1 BOP CASBell/OB Lancing Station Baghouse Stacks**	Normal ☒	Abnormal ☐	0630
23	No. 1 BOP Iron Desulfurization Building Fugitive Emissions	Normal ☒	Abnormal ☐	0635
24	**No. 1 BOP Desulfurization Baghouse Stacks**	Normal ☒	Abnormal ☐	0640
25	No. 1 BOP Flux Handling System Baghouse No. 3 Vent	Normal ☒	Abnormal ☐	0645
26	No. 2 QBOP 116' Flux Handling System Baghouse Stack (North)	Normal ☒	Abnormal ☐	0718
27	No. 2 QBOP 116' Flux Handling System Baghouse Stack (South)	Normal ☒	Abnormal ☐	0715
28	No. 2 QBOP 166' Flux Handling System Baghouse (Center)	Normal ☒	Abnormal ☐	0724
29	No. 2 QBOP 166' Flux Handling System Baghouse (North)	Normal ☒	Abnormal ☐	0721
30	No. 2 QBOP 166' Flux Handling System Baghouse (South)	Normal ☒	Abnormal ☐	0726
31	No. 2 QBOP Day Tank Lime Silo Baghouse Stack	Normal ☒	Abnormal ☐	0700
32	**No. 2 QBOP Desulfurization Baghouse Stacks**	Normal ☒	Abnormal ☐	0940
33	**No. 2 QBOP LMF No. 1 Baghouse Stacks**	Normal ☒	Abnormal ☐	0845
34	**No. 2 QBOP LMF No. 2 Baghouse Stacks**	Normal ☒	Abnormal ☐	0750
35	**No. 2 QBOP LMF No. 3 Baghouse Stacks**	Normal ☒	Abnormal ☐	0755
36	No. 2 QBOP Lime Dumping Station Baghouse Stack	Normal ☒	Abnormal ☐	0655
37	**No. 2 Q-BOP RH Vacuum Degasser Baghouse Stacks**	Normal ☒	Abnormal ☐	0820
38	**No. 2 Q-BOP PM10 Baghouse Stack**	Normal ☒	Abnormal ☐	0945

If the facility is not operating, put the time and SD (for source down) in the Time column.

Circle only the monitoring points below in bold that **you did not check** for any abnormal and visual conditions **while in operation**.

1 14 15 19 20 22 24 32 33 34 35 37 38

Source Audit 11106.doc

5-30

Iron and Steel Subsidiary Source Audit
USS Gary Works

Date: 11/09/07
Inspector: A. RICHARDSON

Start Time: 0630
End Time: 1230

	Monitor Point	Condition		Time
1	**No. 14 Blast Furnace Casthouse Baghouse Stack**	Normal ☒	Abnormal ☐	0900
2	No. 14 Blast Furnace Stockhouse	Normal ☒	Abnormal ☐	0920
3	No. 14 Blast Furnace Stoves Stack	Normal ☒	Abnormal ☐	SD 1212
4	No. 14 Blast Furnace Top	Normal ☒	Abnormal ☐	SD 1215
5	No. 4 Blast Furnace Stoves Stack	Normal ☒	Abnormal ☐	SD 1204
6	No. 4 Blast Furnace Top	Normal ☒	Abnormal ☐	SD 1210
7	No. 6 Blast Furnace Stoves Stack	Normal ☒	Abnormal ☐	1140 SD
8	No. 6 Blast Furnace Top	Normal ☒	Abnormal ☐	1146 SD
9	No. 8 Blast Furnace Stoves Stack	Normal ☒	Abnormal ☐	1152
10	No. 8 Blast Furnace Top	Normal ☒	Abnormal ☐	1158
11	Process Vessel Maintenance Facility	Normal ☒	Abnormal ☐	1220
12	Sinter Plant Cooling Stack 1	Normal ☒	Abnormal ☐	1050
13	Sinter Plant Cooling Stack 3	Normal ☒	Abnormal ☐	1053
14	**Sinter Plant Discharge Area Baghouse Stack 1**	Normal ☒	Abnormal ☐	1056
15	**Sinter Plant Discharge Area Baghouse Stack 3**	Normal ☒	Abnormal ☐	1059
16	Sinter Plant S1-S2 Conveyor Baghouse Stack	Normal ☒	Abnormal ☐	1105
17	Sinter Plant Sinter Screening Station Baghouse Stack	Normal ☒	Abnormal ☐	1100
18	Sinter Plant Storage Bins Building Baghouse Stack	Normal ☒	Abnormal ☐	1115
19	**Sinter Plant Windbox Stack 1 (North)**	Normal ☒	Abnormal ☐	1130
20	**Sinter Plant Windbox Stack 2 (South)**	Normal ☒	Abnormal ☐	1132
21	TBBH No. 4A Boiler	Normal ☒	Abnormal ☐	0830
22	**No. 1 BOP CASBell/OB Lancing Station Baghouse Stacks**	Normal ☒	Abnormal ☐	0630
23	No. 1 BOP Iron Desulfurization Building Fugitive Emissions	Normal ☒	Abnormal ☐	0635
24	**No. 1 BOP Desulfurization Baghouse Stacks**	Normal ☒	Abnormal ☐	0640
25	No. 1 BOP Flux Handling System Baghouse No. 3 Vent	Normal ☒	Abnormal ☐	0645
26	No. 2 QBOP 116' Flux Handling System Baghouse Stack (North)	Normal ☒	Abnormal ☐	0720
27	No. 2 QBOP 116' Flux Handling System Baghouse Stack (South)	Normal ☒	Abnormal ☐	0715
28	No. 2 QBOP 166' Flux Handling System Baghouse (Center)	Normal ☒	Abnormal ☐	0728
29	No. 2 QBOP 166' Flux Handling System Baghouse (North)	Normal ☒	Abnormal ☐	0725
30	No. 2 QBOP 166' Flux Handling System Baghouse (South)	Normal ☒	Abnormal ☐	0730
31	No. 2 QBOP Day Tank Lime Silo Baghouse Stack	Normal ☒	Abnormal ☐	0705
32	**No. 2 QBOP Desulfurization Baghouse Stacks**	Normal ☒	Abnormal ☐	0930
33	**No. 2 QBOP LMF No. 1 Baghouse Stacks**	Normal ☒	Abnormal ☐	0800
34	**No. 2 QBOP LMF No. 2 Baghouse Stacks**	Normal ☒	Abnormal ☐	0745
35	**No. 2 QBOP LMF No. 3 Baghouse Stacks**	Normal ☒	Abnormal ☐	0756
36	No. 2 QBOP Lime Dumping Station Baghouse Stack	Normal ☒	Abnormal ☐	0700
37	**No. 2 Q-BOP RH Vacuum Degasser Baghouse Stacks**	Normal ☒	Abnormal ☐	0805
38	**No. 2 Q-BOP PM10 Baghouse Stack**	Normal ☒	Abnormal ☐	0935

If the facility is not operating, put the time and SD (for source down) in the Time column.

Circle only the monitoring points below in bold that **you did not check** for any abnormal and visual conditions **while in operation**.

1 14 15 19 20 22 24 32 33 34 35 37 38

7-1

Title V Visible Emissions Notations
USS Gary Works

Date: 11/17/07
Inspector:

Start Time: 0530 A
End Time: 1115A

Monitor Point		Condition		Time
D.2.19	No. 2 Battery Scrubber Cars	Normal ☒	Abnormal ☐	0755
D.2.19	Nos. 5 and 7 Battery Pushing Emissions Baghouse Stack	Normal ☒	Abnormal ☐	0720
D.6.9	Sinter Plant Windbox Stack 1 (North)	Normal ☒	Abnormal ☐	1024
D.6.9	Sinter Plant Windbox Stack 2 (South)	Normal ☒	Abnormal ☐	1028
D.6.9	Sinter Plant Sinter Screening Station Baghouse Stack	Normal ☒	Abnormal ☐	1052
D.6.9	Sinter Plant Discharge Area Baghouse Stack 1	Normal ☒	Abnormal ☐	1044
D.6.9	Sinter Plant Discharge Area Baghouse Stack 3	Normal ☒	Abnormal ☐	1039
D.6.9	Sinter Plant Cooling Stack 1	Normal ☒	Abnormal ☐	1036
D.6.9	Sinter Plant Cooling Stack 3	Normal ☒	Abnormal ☐	1033
D.7.10	No. 14 Blast Furnace Casthouse Baghouse Stack	Normal ☒	Abnormal ☐	0833
D.7.10	Iron Beaching Facility	Normal ☒	Abnormal ☐	0803
D.8.11(a)	No. 1 BOP Gas Cleaning System Stack (North)	Normal ☒	Abnormal ☐	0749
D.8.11(a)	No. 1 BOP Gas Cleaning System Stack (South)	Normal ☒	Abnormal ☐	0750
D.8.11(a)	No. 1 BOP CASBell/OB Lancing Baghouse Stack	Normal ☒	Abnormal ☐	0908
D.9.13(a)	No. 2 QBOP Gas Cleaning System Stack (East)	Normal ☒	Abnormal ☐	0742
D.9.13(a)	No. 2 QBOP Gas Cleaning System Stack (West)	Normal ☒	Abnormal ☐	0743
D.9.13(a)	No. 2 QBOP Hot Metal Desulfurization Baghouse Stack	Normal ☒	Abnormal ☐	0848
D.9.13(a)	No. 2 QBOP Secondary Emissions Baghouse Stack	Normal ☒	Abnormal ☐	0855
D.14.8	No. 4 Boiler House No. 1 Boiler Stack	Normal ☒	Abnormal ☐	0835
D.14.8	No. 4 Boiler House No. 2 Boiler Stack	Normal ☒	Abnormal ☐	0836
D.15.13	Turbo Blower Boiler House Boiler No. 1 Stack	Normal ☒	Abnormal ☐	0823
D.15.13	Turbo Blower Boiler House Boiler No. 2 Stack	Normal ☒	Abnormal ☐	0824
D.15.13	Turbo Blower Boiler House Boiler No. 3 Stack	Normal ☒	Abnormal ☐	0825
D.15.13	Turbo Blower Boiler House Boiler No. 5 Stack	Normal ☒	Abnormal ☐	0826

If the facility is not operating, put the time and SD (for source down) in the Time column.

7-2

Title V Visible Emissions Notations
USS Gary Works

Date: 11-23-07
Inspector: Chet Dulin

Start Time: 07:11
End Time: 11:36

Monitor Point		Condition		Time
D.2.19	No. 2 Battery Scrubber Cars	Normal ☑	Abnormal ☐	07:07
D.2.19	Nos. 5 and 7 Battery Pushing Emissions Baghouse Stack	Normal ☑	Abnormal ☐	07:09
D.6.9	Sinter Plant Windbox Stack 1 (North)	Normal ☑	Abnormal ☐	07:11
D.6.9	Sinter Plant Windbox Stack 2 (South)	Normal ☑	Abnormal ☐	07:15
D.6.9	Sinter Plant Sinter Screening Station Baghouse Stack	Normal ☑	Abnormal ☐	07:15
D.6.9	Sinter Plant Discharge Area Baghouse Stack 1	Normal ☑	Abnormal ☐	07:22
D.6.9	Sinter Plant Discharge Area Baghouse Stack 3	Normal ☑	Abnormal ☐	07:26
D.6.9	Sinter Plant Cooling Stack 1	Normal ☑	Abnormal ☐	07:36
D.6.9	Sinter Plant Cooling Stack 3	Normal ☑	Abnormal ☐	07:30
D.7.10	No. 14 Blast Furnace Casthouse Baghouse Stack	Normal ☑	Abnormal ☐	09:03
D.7.10	Iron Beaching Facility	Normal ☑	Abnormal ☐	11:34
D.8.11(a)	No. 1 BOP Gas Cleaning System Stack (North)	Normal ☑	Abnormal ☐	08:45
D.8.11(a)	No. 1 BOP Gas Cleaning System Stack (South)	Normal ☑	Abnormal ☐	08:48
D.8.11(a)	No. 1 BOP CASBell/OB Lancing Baghouse Stack	Normal ☑	Abnormal ☐	08:23
D.9.13(a)	No. 2 QBOP Gas Cleaning System Stack (East)	Normal ☑	Abnormal ☐	10:21
D.9.13(a)	No. 2 QBOP Gas Cleaning System Stack (West)	Normal ☑	Abnormal ☐	10:19
D.9.13(a)	No. 2 QBOP Hot Metal Desulfurization Baghouse Stack	Normal ☑	Abnormal ☐	09:25
D.9.13(a)	No. 2 QBOP Secondary Emissions Baghouse Stack	Normal ☑	Abnormal ☐	09:30
D.14.8	No. 4 Boiler House No. 1 Boiler Stack	Normal ☑	Abnormal ☐	09:08
D.14.8	No. 4 Boiler House No. 2 Boiler Stack	Normal ☑	Abnormal ☐	09:11
D.15.13	Turbo Blower Boiler House Boiler No. 1 Stack	Normal ☑	Abnormal ☐	10:06
D.15.13	Turbo Blower Boiler House Boiler No. 2 Stack	Normal ☑	Abnormal ☐	10:08
D.15.13	Turbo Blower Boiler House Boiler No. 3 Stack	Normal ☑	Abnormal ☐	10:10
D.15.13	Turbo Blower Boiler House Boiler No. 5 Stack	Normal ☑	Abnormal ☐	10:12

If the facility is not operating, put the time and SD (for source down) in the Time column.

7-3

Title V Visible Emissions Notations
USS Gary Works

Date: 11/27/07
Inspector: [signature]

Start Time: 0705
End Time: 1051

Monitor Point		Condition		Time
D.2.19	No. 2 Battery Scrubber Cars	Normal ☑	Abnormal ☐	1005
D.2.19	Nos. 5 and 7 Battery Pushing Emissions Baghouse Stack	Normal ☑	Abnormal ☐	1011
D.6.9	Sinter Plant Windbox Stack 1 (North)	Normal ☑	Abnormal ☐	1020
D.6.9	Sinter Plant Windbox Stack 2 (South)	Normal ☑	Abnormal ☐	1024
D.6.9	Sinter Plant Sinter Screening Station Baghouse Stack	Normal ☑	Abnormal ☐	1051
D.6.9	Sinter Plant Discharge Area Baghouse Stack 1	Normal ☑	Abnormal ☐	1029
D.6.9	Sinter Plant Discharge Area Baghouse Stack 3	Normal ☑	Abnormal ☐	1033
D.6.9	Sinter Plant Cooling Stack 1	Normal ☑	Abnormal ☐	1038
D.6.9	Sinter Plant Cooling Stack 3	Normal ☑	Abnormal ☐	1042
D.7.10	No. 14 Blast Furnace Casthouse Baghouse Stack	Normal ☑	Abnormal ☐	0817 SD
D.7.10	Iron Beaching Facility	Normal ☑	Abnormal ☐	0804
D.8.11(a)	No. 1 BOP Gas Cleaning System Stack (North)	Normal ☑	Abnormal ☐	0950
D.8.11(a)	No. 1 BOP Gas Cleaning System Stack (South)	Normal ☑	Abnormal ☐	0956
D.8.11(a)	No. 1 BOP CASBell/OB Lancing Baghouse Stack	Normal ☑	Abnormal ☐	0929
D.9.13(a)	No. 2 QBOP Gas Cleaning System Stack (East)	Normal ☑	Abnormal ☐	0705
D.9.13(a)	No. 2 QBOP Gas Cleaning System Stack (West)	Normal ☑	Abnormal ☐	0710
D.9.13(a)	No. 2 QBOP Hot Metal Desulfurization Baghouse Stack	Normal ☑	Abnormal ☐	0824
D.9.13(a)	No. 2 QBOP Secondary Emissions Baghouse Stack	Normal ☑	Abnormal ☐	0828
D.14.8	No. 4 Boiler House No. 1 Boiler Stack	Normal ☑	Abnormal ☐	0835
D.14.8	No. 4 Boiler House No. 2 Boiler Stack	Normal ☑	Abnormal ☐	0839
D.15.13	Turbo Blower Boiler House Boiler No. 1 Stack	Normal ☑	Abnormal ☐	0844
D.15.13	Turbo Blower Boiler House Boiler No. 2 Stack	Normal ☑	Abnormal ☐	0849
D.15.13	Turbo Blower Boiler House Boiler No. 3 Stack	Normal ☑	Abnormal ☐	0853
D.15.13	Turbo Blower Boiler House Boiler No. 5 Stack	Normal ☑	Abnormal ☐	0858

If the facility is not operating, put the time and SD (for source down) in the Time column.

7-4

Title V Visible Emissions Notations
USS Gary Works

Date: 12-02-07
Inspector: J. SKALK

Start Time: 0727
End Time: 1409

Monitor Point		Condition		Time
D.2.19	No. 2 Battery Scrubber Cars	Normal ☑	Abnormal ☐	0727
D.2.19	Nos. 5 and 7 Battery Pushing Emissions Baghouse Stack	Normal ☑	Abnormal ☐	0800
D.6.9	Sinter Plant Windbox Stack 1 (North)	Normal ☑	Abnormal ☐	1238
D.6.9	Sinter Plant Windbox Stack 2 (South)	Normal ☑	Abnormal ☐	1233
D.6.9	Sinter Plant Sinter Screening Station Baghouse Stack	Normal ☑	Abnormal ☐	1312
D.6.9	Sinter Plant Discharge Area Baghouse Stack 1	Normal ☑	Abnormal ☐	1302
D.6.9	Sinter Plant Discharge Area Baghouse Stack 3	Normal ☑	Abnormal ☐	1256
D.6.9	Sinter Plant Cooling Stack 1	Normal ☑	Abnormal ☐	1246
D.6.9	Sinter Plant Cooling Stack 3	Normal ☑	Abnormal ☐	1251
D.7.10	No. 14 Blast Furnace Casthouse Baghouse Stack	Normal ☑	Abnormal ☐	1151
D.7.10	Iron Beaching Facility	Normal ☑	Abnormal ☐	1111 - SD
D.8.11(a)	No. 1 BOP Gas Cleaning System Stack (North)	Normal ☑	Abnormal ☐	0909
D.8.11(a)	No. 1 BOP Gas Cleaning System Stack (South)	Normal ☑	Abnormal ☐	0912
D.8.11(a)	No. 1 BOP CASBell/OB Lancing Baghouse Stack	Normal ☑	Abnormal ☐	0848
D.9.13(a)	No. 2 QBOP Gas Cleaning System Stack (East)	Normal ☑	Abnormal ☐	0921
D.9.13(a)	No. 2 QBOP Gas Cleaning System Stack (West)	Normal ☑	Abnormal ☐	0918
D.9.13(a)	No. 2 QBOP Hot Metal Desulfurization Baghouse Stack	Normal ☑	Abnormal ☐	1134
D.9.13(a)	No. 2 QBOP Secondary Emissions Baghouse Stack	Normal ☑	Abnormal ☐	1129
D.14.8	No. 4 Boiler House No. 1 Boiler Stack	Normal ☑	Abnormal ☐	1208
D.14.8	No. 4 Boiler House No. 2 Boiler Stack	Normal ☑	Abnormal ☐	1211
D.15.13	Turbo Blower Boiler House Boiler No. 1 Stack	Normal ☑	Abnormal ☐	1358
D.15.13	Turbo Blower Boiler House Boiler No. 2 Stack	Normal ☑	Abnormal ☐	1401
D.15.13	Turbo Blower Boiler House Boiler No. 3 Stack	Normal ☑	Abnormal ☐	1404
D.15.13	Turbo Blower Boiler House Boiler No. 5 Stack	Normal ☑	Abnormal ☐	1407

If the facility is not operating, put the time and SD (for source down) in the Time column.

7-5

Title V Visible Emissions Notations
USS Gary Works

Date: 12-1-07
Inspector: Chet Dulin

Start Time: 07:25
End Time: 11:57

Monitor Point		Condition		Time
D.2.19	No. 2 Battery Scrubber Cars	Normal ☑	Abnormal ☐	11:15
D.2.19	Nos. 5 and 7 Battery Pushing Emissions Baghouse Stack	Normal ☑	Abnormal ☐	11:20
D.6.9	Sinter Plant Windbox Stack 1 (North)	Normal ☑	Abnormal ☐	07:25
D.6.9	Sinter Plant Windbox Stack 2 (South)	Normal ☑	Abnormal ☐	07:30
D.6.9	Sinter Plant Sinter Screening Station Baghouse Stack	Normal ☑	Abnormal ☐	08:07
D.6.9	Sinter Plant Discharge Area Baghouse Stack 1	Normal ☑	Abnormal ☐	07:40
D.6.9	Sinter Plant Discharge Area Baghouse Stack 3	Normal ☑	Abnormal ☐	07:45
D.6.9	Sinter Plant Cooling Stack 1	Normal ☑	Abnormal ☐	07:56
D.6.9	Sinter Plant Cooling Stack 3	Normal ☑	Abnormal ☐	07:50
D.7.10	No. 14 Blast Furnace Casthouse Baghouse Stack	Normal ☑	Abnormal ☐	09:38
D.7.10	Iron Beaching Facility	Normal ☑	Abnormal ☐	11:55
D.8.11(a)	No. 1 BOP Gas Cleaning System Stack (North)	Normal ☑	Abnormal ☐	09:07
D.8.11(a)	No. 1 BOP Gas Cleaning System Stack (South)	Normal ☑	Abnormal ☐	09:11
D.8.11(a)	No. 1 BOP CASBell/OB Lancing Baghouse Stack	Normal ☑	Abnormal ☐	08:45
D.9.13(a)	No. 2 QBOP Gas Cleaning System Stack (East)	Normal ☑	Abnormal ☐	10:33
D.9.13(a)	No. 2 QBOP Gas Cleaning System Stack (West)	Normal ☑	Abnormal ☐	10:31
D.9.13(a)	No. 2 QBOP Hot Metal Desulfurization Baghouse Stack	Normal ☑	Abnormal ☐	10:10
D.9.13(a)	No. 2 QBOP Secondary Emissions Baghouse Stack	Normal ☑	Abnormal ☐	10:15
D.14.8	No. 4 Boiler House No. 1 Boiler Stack	Normal ☑	Abnormal ☐	09:53
D.14.8	No. 4 Boiler House No. 2 Boiler Stack	Normal ☑	Abnormal ☐	09:55
D.15.13	Turbo Blower Boiler House Boiler No. 1 Stack	Normal ☑	Abnormal ☐	09:24
D.15.13	Turbo Blower Boiler House Boiler No. 2 Stack	Normal ☑	Abnormal ☐	09:26
D.15.13	Turbo Blower Boiler House Boiler No. 3 Stack	Normal ☑	Abnormal ☐	09:28
D.15.13	Turbo Blower Boiler House Boiler No. 5 Stack	Normal ☑	Abnormal ☐	09:30

If the facility is not operating, put the time and SD (for source down) in the Time column.

7-6

Title V Visible Emissions Notations
USS Gary Works

Date: 11-11-07 Start Time: 07:34
Inspector: [illegible] End Time: 14:12

Monitor Point		Condition		Time
D.2.19	No. 2 Battery Scrubber Cars	Normal ☑	Abnormal ☐	12:20
D.2.19	Nos. 5 and 7 Battery Pushing Emissions Baghouse Stack	Normal ☑	Abnormal ☐	12:25
D.6.9	Sinter Plant Windbox Stack 1 (North)	Normal ☑	Abnormal ☐	14:02
D.6.9	Sinter Plant Windbox Stack 2 (South)	Normal ☑	Abnormal ☐	14:07
D.6.9	Sinter Plant Sinter Screening Station Baghouse Stack	Normal ☑	Abnormal ☐	12:58
D.6.9	Sinter Plant Discharge Area Baghouse Stack 1	Normal ☑	Abnormal ☐	12:41
D.6.9	Sinter Plant Discharge Area Baghouse Stack 3	Normal ☑	Abnormal ☐	12:46
D.6.9	Sinter Plant Cooling Stack 1	Normal ☑	Abnormal ☐	12:30
D.6.9	Sinter Plant Cooling Stack 3	Normal ☑	Abnormal ☐	12:35
D.7.10	No. 14 Blast Furnace Casthouse Baghouse Stack	Normal ☑	Abnormal ☐	08:17
D.7.10	Iron Beaching Facility	Normal ☑	Abnormal ☐	09:57
D.8.11(a)	No. 1 BOP Gas Cleaning System Stack (North)	Normal ☑	Abnormal ☐	07:34
D.8.11(a)	No. 1 BOP Gas Cleaning System Stack (South)	Normal ☑	Abnormal ☐	07:36
D.8.11(a)	No. 1 BOP CASBell/OB Lancing Baghouse Stack	Normal ☑	Abnormal ☐	07:40
D.9.13(a)	No. 2 QBOP Gas Cleaning System Stack (East)	Normal ☑	Abnormal ☐	08:56
D.9.13(a)	No. 2 QBOP Gas Cleaning System Stack (West)	Normal ☑	Abnormal ☐	08:58
D.9.13(a)	No. 2 QBOP Hot Metal Desulfurization Baghouse Stack	Normal ☑	Abnormal ☐	08:33
D.9.13(a)	No. 2 QBOP Secondary Emissions Baghouse Stack	Normal ☑	Abnormal ☐	08:38
D.14.8	No. 4 Boiler House No. 1 Boiler Stack	Normal ☑	Abnormal ☐	08:22
D.14.8	No. 4 Boiler House No. 2 Boiler Stack	Normal ☑	Abnormal ☐	08:24
D.15.13	Turbo Blower Boiler House Boiler No. 1 Stack	Normal ☑	Abnormal ☐	0804
D.15.13	Turbo Blower Boiler House Boiler No. 2 Stack	Normal ☑	Abnormal ☐	0806
D.15.13	Turbo Blower Boiler House Boiler No. 3 Stack	Normal ☑	Abnormal ☐	0808
D.15.13	Turbo Blower Boiler House Boiler No. 5 Stack	Normal ☑	Abnormal ☐	0810

If the facility is not operating, put the time and SD (for source down) in the Time column.

7-7

Title V Visible Emissions Notations
USS Gary Works

Date: 11-30-07
Inspector: J. Johnson

Start Time: 0715
End Time: 1315

Monitor Point		Condition		Time
D.2.19	No. 2 Battery Scrubber Cars	Normal ☑	Abnormal ☐	0740
D.2.19	Nos. 5 and 7 Battery Pushing Emissions Baghouse Stack	Normal ☑	Abnormal ☐	0748
D.6.9	Sinter Plant Windbox Stack 1 (North)	Normal ☑	Abnormal ☐	0800
D.6.9	Sinter Plant Windbox Stack 2 (South)	Normal ☑	Abnormal ☐	0755
D.6.9	Sinter Plant Sinter Screening Station Baghouse Stack	Normal ☑	Abnormal ☐	0830
D.6.9	Sinter Plant Discharge Area Baghouse Stack 1	Normal ☑	Abnormal ☐	0815
D.6.9	Sinter Plant Discharge Area Baghouse Stack 3	Normal ☑	Abnormal ☐	0820
D.6.9	Sinter Plant Cooling Stack 1	Normal ☑	Abnormal ☐	0805
D.6.9	Sinter Plant Cooling Stack 3	Normal ☑	Abnormal ☐	0820
D.7.10	No. 14 Blast Furnace Casthouse Baghouse Stack	Normal ☑	Abnormal ☐	0930
D.7.10	Iron Beaching Facility	Normal ☑	Abnormal ☐	1315
D.8.11(a)	No. 1 BOP Gas Cleaning System Stack (North)	Normal ☑	Abnormal ☐	1245
D.8.11(a)	No. 1 BOP Gas Cleaning System Stack (South)	Normal ☑	Abnormal ☐	1250
D.8.11(a)	No. 1 BOP CASBell/OB Lancing Baghouse Stack	Normal ☑	Abnormal ☐	1209
D.9.13(a)	No. 2 QBOP Gas Cleaning System Stack (East)	Normal ☑	Abnormal ☐	1252
D.9.13(a)	No. 2 QBOP Gas Cleaning System Stack (West)	Normal ☑	Abnormal ☐	1300
D.9.13(a)	No. 2 QBOP Hot Metal Desulfurization Baghouse Stack	Normal ☑	Abnormal ☐	1640
D.9.13(a)	No. 2 QBOP Secondary Emissions Baghouse Stack	Normal ☑	Abnormal ☐	0955
D.14.8	No. 4 Boiler House No. 1 Boiler Stack	Normal ☑	Abnormal ☐	0920
D.14.8	No. 4 Boiler House No. 2 Boiler Stack	Normal ☑	Abnormal ☐	0925
D.15.13	Turbo Blower Boiler House Boiler No. 1 Stack	Normal ☑	Abnormal ☐	0910
D.15.13	Turbo Blower Boiler House Boiler No. 2 Stack	Normal ☑	Abnormal ☐	0915
D.15.13	Turbo Blower Boiler House Boiler No. 3 Stack	Normal ☑	Abnormal ☐	0920
D.15.13	Turbo Blower Boiler House Boiler No. 5 Stack	Normal ☑	Abnormal ☐	0925

If the facility is not operating, put the time and SD (for source down) in the Time column.

7-8

Title V Visible Emissions Notations
USS Gary Works

Date: 11/28/07
Inspector: [illegible]

Start Time: 0703
End Time: 1022

Monitor Point		Condition		Time
D.2.19	No. 2 Battery Scrubber Cars	Normal ☑	Abnormal ☐	0946
D.2.19	Nos. 5 and 7 Battery Pushing Emissions Baghouse Stack	Normal ☑	Abnormal ☐	0941
D.6.9	Sinter Plant Windbox Stack 1 (North)	Normal ☑	Abnormal ☐	0952
D.6.9	Sinter Plant Windbox Stack 2 (South)	Normal ☑	Abnormal ☐	0956
D.6.9	Sinter Plant Sinter Screening Station Baghouse Stack	Normal ☑	Abnormal ☐	1022
D.6.9	Sinter Plant Discharge Area Baghouse Stack 1	Normal ☑	Abnormal ☐	1000
D.6.9	Sinter Plant Discharge Area Baghouse Stack 3	Normal ☑	Abnormal ☐	1009
D.6.9	Sinter Plant Cooling Stack 1	Normal ☑	Abnormal ☐	1005
D.6.9	Sinter Plant Cooling Stack 3	Normal ☑	Abnormal ☐	1014
D.7.10	No. 14 Blast Furnace Casthouse Baghouse Stack	Normal ☑	Abnormal ☐	0812 SD
D.7.10	Iron Beaching Facility	Normal ☑	Abnormal ☐	0758
D.8.11(a)	No. 1 BOP Gas Cleaning System Stack (North)	Normal ☑	Abnormal ☐	0932
D.8.11(a)	No. 1 BOP Gas Cleaning System Stack (South)	Normal ☑	Abnormal ☐	0933
D.8.11(a)	No. 1 BOP CASBell/OB Lancing Baghouse Stack	Normal ☑	Abnormal ☐	0919
D.9.13(a)	No. 2 QBOP Gas Cleaning System Stack (East)	Normal ☑	Abnormal ☐	0703
D.9.13(a)	No. 2 QBOP Gas Cleaning System Stack (West)	Normal ☑	Abnormal ☐	0707
D.9.13(a)	No. 2 QBOP Hot Metal Desulfurization Baghouse Stack	Normal ☑	Abnormal ☐	0851
D.9.13(a)	No. 2 QBOP Secondary Emissions Baghouse Stack	Normal ☑	Abnormal ☐	0855
D.14.8	No. 4 Boiler House No. 1 Boiler Stack	Normal ☑	Abnormal ☐	0825
D.14.8	No. 4 Boiler House No. 2 Boiler Stack	Normal ☑	Abnormal ☐	0828
D.15.13	Turbo Blower Boiler House Boiler No. 1 Stack	Normal ☑	Abnormal ☐	0833
D.15.13	Turbo Blower Boiler House Boiler No. 2 Stack	Normal ☑	Abnormal ☐	0837
D.15.13	Turbo Blower Boiler House Boiler No. 3 Stack	Normal ☑	Abnormal ☐	0841
D.15.13	Turbo Blower Boiler House Boiler No. 5 Stack	Normal ☑	Abnormal ☐	0845

If the facility is not operating, put the time and SD (for source down) in the Time column.

7 - 2

Title V Visible Emissions Notations
USS Gary Works

Date: 11/19/07
Inspector: A. RICHARDSON

Start Time: 0630
End Time: 1230

Monitor Point		Condition		Time
D.2.19	No. 2 Battery Scrubber Cars	Normal ☒	Abnormal ☐	1217
D.2.19	Nos. 5 and 7 Battery Pushing Emissions Baghouse Stack	Normal ☒	Abnormal ☐	1218
D.6.9	Sinter Plant Windbox Stack 1 (North)	Normal ☒	Abnormal ☐	1130
D.6.9	Sinter Plant Windbox Stack 2 (South)	Normal ☒	Abnormal ☐	1132
D.6.9	Sinter Plant Sinter Screening Station Baghouse Stack	Normal ☒	Abnormal ☐	1053
D.6.9	Sinter Plant Discharge Area Baghouse Stack 1	Normal ☒	Abnormal ☐	1040
D.6.9	Sinter Plant Discharge Area Baghouse Stack 3	Normal ☒	Abnormal ☐	1042
D.6.9	Sinter Plant Cooling Stack 1	Normal ☒	Abnormal ☐	1035
D.6.9	Sinter Plant Cooling Stack 3	Normal ☒	Abnormal ☐	1037
D.7.10	No. 14 Blast Furnace Casthouse Baghouse Stack	Normal ☒	Abnormal ☐	0855
D.7.10	Iron Beaching Facility	Normal ☒	Abnormal ☐	0750
D.8.11(a)	No. 1 BOP Gas Cleaning System Stack (North)	Normal ☒	Abnormal ☐	0655
D.8.11(a)	No. 1 BOP Gas Cleaning System Stack (South)	Normal ☒	Abnormal ☐	0657
D.8.11(a)	No. 1 BOP CASBell/OB Lancing Baghouse Stack	Normal ☒	Abnormal ☐	0630
D.9.13(a)	No. 2 QBOP Gas Cleaning System Stack (East)	Normal ☒	Abnormal ☐	0638
D.9.13(a)	No. 2 QBOP Gas Cleaning System Stack (West)	Normal ☒	Abnormal ☐	0735
D.9.13(a)	No. 2 QBOP Hot Metal Desulfurization Baghouse Stack	Normal ☒	Abnormal ☐	0920
D.9.13(a)	No. 2 QBOP Secondary Emissions Baghouse Stack	Normal ☒	Abnormal ☐	0925
D.14.8	No. 4 Boiler House No. 1 Boiler Stack	Normal ☒	Abnormal ☐	0900
D.14.8	No. 4 Boiler House No. 2 Boiler Stack	Normal ☒	Abnormal ☐	0907
D.15.13	Turbo Blower Boiler House Boiler No. 1 Stack	Normal ☒	Abnormal ☐	0825
D.15.13	Turbo Blower Boiler House Boiler No. 2 Stack	Normal ☒	Abnormal ☐	0827
D.15.13	Turbo Blower Boiler House Boiler No. 3 Stack	Normal ☒	Abnormal ☐	0829
D.15.13	Turbo Blower Boiler House Boiler No. 5 Stack	Normal ☒	Abnormal ☐	0831

If the facility is not operating, put the time and SD (for source down) in the Time column.

7-

Title V Visible Emissions Notations
USS Gary Works

Date: 11/10/07
Inspector:

Start Time: 06^00 A
End Time: 11^00 A

Monitor Point		Condition		Time
D.2.19	No. 2 Battery Scrubber Cars	Normal ☒	Abnormal ☐	0733
D.2.19	Nos. 5 and 7 Battery Pushing Emissions Baghouse Stacks	Normal ☒	Abnormal ☐	0734
D.6.9	Sinter Plant Windbox Stack 1 (North)	Normal ☒	Abnormal ☐	1001
D.6.9	Sinter Plant Windbox Stack 2 (South)	Normal ☒	Abnormal ☐	1004
D.6.9	Sinter Plant Sinter Screening Station Baghouse Stack	Normal ☒	Abnormal ☐	1028
D.6.9	Sinter Plant Discharge Area Baghouse Stack 1	Normal ☒	Abnormal ☐	1023
D.6.9	Sinter Plant Discharge Area Baghouse Stack 3	Normal ☒	Abnormal ☐	1014
D.6.9	Sinter Plant Cooling Stack 1	Normal ☒	Abnormal ☐	1011
D.6.9	Sinter Plant Cooling Stack 3	Normal ☒	Abnormal ☐	1008
D.7.10	No. 14 Blast Furnace Casthouse Baghouse Stack	Normal ☒	Abnormal ☐	0746
D.7.10	Iron Beaching Facility	Normal ☒	Abnormal ☐	0651
D.8.11(a)	No. 1 BOP Gas Cleaning System Stack (North)	Normal ☒	Abnormal ☐	0708
D.8.11(a)	No. 1 BOP Gas Cleaning System Stack (South)	Normal ☒	Abnormal ☐	0705
D.8.11(a)	No. 1 BOP CASBell/OB Lancing Baghouse Stack	Normal ☒	Abnormal ☐	0810
D.9.13(a)	No. 2 QBOP Gas Cleaning System Stack (East)	Normal ☒	Abnormal ☐	0637
D.9.13(a)	No. 2 QBOP Gas Cleaning System Stack (West)	Normal ☒	Abnormal ☐	0638
D.9.13(a)	No. 2 QBOP Hot Metal Desulfurization Baghouse Stack	Normal ☒	Abnormal ☐	0812
D.9.13(a)	No. 2 QBOP Secondary Emissions Baghouse Stack	Normal ☒	Abnormal ☐	0818
D.14.8	No. 4 Boiler House No. 1 Boiler Stack	Normal ☒	Abnormal ☐	0748
D.14.8	No. 4 Boiler House No. 2 Boiler Stack	Normal ☒	Abnormal ☐	0749
D.15.13	Turbo Blower Boiler House Boiler No. 1 Stack	Normal ☒	Abnormal ☐	0726
D.15.13	Turbo Blower Boiler House Boiler No. 2 Stack	Normal ☒	Abnormal ☐	0727
D.15.13	Turbo Blower Boiler House Boiler No. 3 Stack	Normal ☒	Abnormal ☐	0728
D.15.13	Turbo Blower Boiler House Boiler No. 5 Stack	Normal ☒	Abnormal ☐	0729

If the facility is not operating, put the time and SD (for source down) in the Time column.

7-4

Title V Visible Emissions Notations
USS Gary Works

Date: 11/21/07
Inspector: A. Richardson

Start Time: 0630
End Time: 1330

Monitor Point		Condition		Time
D.2.19	No. 2 Battery Scrubber Cars	Normal ☒	Abnormal ☐	1110
D.2.19	Nos. 5 and 7 Battery Pushing Emissions Baghouse Stack	Normal ☒	Abnormal ☐	1115
D.6.9	Sinter Plant Windbox Stack 1 (North)	Normal ☒	Abnormal ☐	1232
D.6.9	Sinter Plant Windbox Stack 2 (South)	Normal ☒	Abnormal ☐	1234
D.6.9	Sinter Plant Sinter Screening Station Baghouse Stack	Normal ☒	Abnormal ☐	1218
D.6.9	Sinter Plant Discharge Area Baghouse Stack 1	Normal ☒	Abnormal ☐	1200
D.6.9	Sinter Plant Discharge Area Baghouse Stack 3	Normal ☒	Abnormal ☐	1202
D.6.9	Sinter Plant Cooling Stack 1	Normal ☒	Abnormal ☐	1150
D.6.9	Sinter Plant Cooling Stack 3	Normal ☒	Abnormal ☐	1152
D.7.10	No. 14 Blast Furnace Casthouse Baghouse Stack	Normal ☒	Abnormal ☐	0900
D.7.10	Iron Beaching Facility	Normal ☒	Abnormal ☐	0820
D.8.11(a)	No. 1 BOP Gas Cleaning System Stack (North)	Normal ☒	Abnormal ☐	0755
D.8.11(a)	No. 1 BOP Gas Cleaning System Stack (South)	Normal ☒	Abnormal ☐	0757
D.8.11(a)	No. 1 BOP CASBell/OB Lancing Baghouse Stack	Normal ☒	Abnormal ☐	1043
D.9.13(a)	No. 2 QBOP Gas Cleaning System Stack (East)	Normal ☒	Abnormal ☐	0746
D.9.13(a)	No. 2 QBOP Gas Cleaning System Stack (West)	Normal ☒	Abnormal ☐	0747
D.9.13(a)	No. 2 QBOP Hot Metal Desulfurization Baghouse Stack	Normal ☒	Abnormal ☐	0957
D.9.13(a)	No. 2 QBOP Secondary Emissions Baghouse Stack	Normal ☒	Abnormal ☐	1000
D.14.8	No. 4 Boiler House No. 1 Boiler Stack	Normal ☒	Abnormal ☐	0905
D.14.8	No. 4 Boiler House No. 2 Boiler Stack	Normal ☒	Abnormal ☐	0907
D.15.13	Turbo Blower Boiler House Boiler No. 1 Stack	Normal ☒	Abnormal ☐	0850
D.15.13	Turbo Blower Boiler House Boiler No. 2 Stack	Normal ☒	Abnormal ☐	0852
D.15.13	Turbo Blower Boiler House Boiler No. 3 Stack	Normal ☒	Abnormal ☐	0854
D.15.13	Turbo Blower Boiler House Boiler No. 5 Stack	Normal ☒	Abnormal ☐	0856

If the facility is not operating, put the time and SD (for source down) in the Time column.

Title V Visible Emissions Notations
USS Gary Works

Date: 12-8-07
Inspector: Chet Dulin

Start Time: 08:03
End Time: 13:25

Monitor Point		Condition		Time
D.2.19	No. 2 Battery Scrubber Cars #9121	Normal ☑	Abnormal ☐	13:20
D.2.19	Nos. 5 and 7 Battery Pushing Emissions Baghouse Stack	Normal ☑	Abnormal ☐	13:25
D.6.9	Sinter Plant Windbox Stack 1 (North)	Normal ☑	Abnormal ☐	13:10
D.6.9	Sinter Plant Windbox Stack 2 (South)	Normal ☑	Abnormal ☐	13:15
D.6.9	Sinter Plant Sinter Screening Station Baghouse Stack	Normal ☑	Abnormal ☐	12:54
D.6.9	Sinter Plant Discharge Area Baghouse Stack 1	Normal ☑	Abnormal ☐	12:36
D.6.9	Sinter Plant Discharge Area Baghouse Stack 3	Normal ☑	Abnormal ☐	12:40
D.6.9	Sinter Plant Cooling Stack 1	Normal ☑	Abnormal ☐	12:45
D.6.9	Sinter Plant Cooling Stack 3	Normal ☑	Abnormal ☐	12:32
D.7.10	No. 14 Blast Furnace Casthouse Baghouse Stack	Normal ☑	Abnormal ☐	08:47
D.7.10	Iron Beaching Facility	Normal ☑	Abnormal ☐	08:08
D.8.11(a)	No. 1 BOP Gas Cleaning System Stack (North)	Normal ☑	Abnormal ☐	09:11
D.8.11(a)	No. 1 BOP Gas Cleaning System Stack (South)	Normal ☑	Abnormal ☐	09:13
D.8.11(a)	No. 1 BOP CASBell/OB Lancing Baghouse Stack	Normal ☑	Abnormal ☐	09:17
D.9.13(a)	No. 2 QBOP Gas Cleaning System Stack (East)	Normal ☑	Abnormal ☐	08:05
D.9.13(a)	No. 2 QBOP Gas Cleaning System Stack (West)	Normal ☑	Abnormal ☐	08:03
D.9.13(a)	No. 2 QBOP Hot Metal Desulfurization Baghouse Stack	Normal ☑	Abnormal ☐	09:01
D.9.13(a)	No. 2 QBOP Secondary Emissions Baghouse Stack	Normal ☑	Abnormal ☐	09:05
D.14.8	No. 4 Boiler House No. 1 Boiler Stack	Normal ☑	Abnormal ☐	08:51
D.14.8	No. 4 Boiler House No. 2 Boiler Stack	Normal ☑	Abnormal ☐	08:53
D.15.13	Turbo Blower Boiler House Boiler No. 1 Stack	Normal ☑	Abnormal ☐	08:34
D.15.13	Turbo Blower Boiler House Boiler No. 2 Stack	Normal ☑	Abnormal ☐	08:36
D.15.13	Turbo Blower Boiler House Boiler No. 3 Stack	Normal ☑	Abnormal ☐	08:38
D.15.13	Turbo Blower Boiler House Boiler No. 5 Stack	Normal ☑	Abnormal ☐	08:40

If the facility is not operating, put the time and SD (for source down) in the Time column.

Title V Visible Emissions Notations
USS Gary Works

Date: 11-24-07
Inspector: C. KRABBS

Start Time: 0742
End Time: 1317

Monitor Point		Condition		Time
D.2.19	No. 2 Battery Scrubber Cars	Normal ☑	Abnormal ☐	1310
D.2.19	Nos. 5 and 7 Battery Pushing Emissions Baghouse Stack	Normal ☑	Abnormal ☐	1317
D.6.9	Sinter Plant Windbox Stack 1 (North)	Normal ☑	Abnormal ☐	1115
D.6.9	Sinter Plant Windbox Stack 2 (South)	Normal ☑	Abnormal ☐	1117
D.6.9	Sinter Plant Sinter Screening Station Baghouse Stack	Normal ☑	Abnormal ☐	1043
D.6.9	Sinter Plant Discharge Area Baghouse Stack 1	Normal ☑	Abnormal ☐	1028
D.6.9	Sinter Plant Discharge Area Baghouse Stack 3	Normal ☑	Abnormal ☐	1033
D.6.9	Sinter Plant Cooling Stack 1	Normal ☑	Abnormal ☐	1018
D.6.9	Sinter Plant Cooling Stack 3	Normal ☑	Abnormal ☐	1021
D.7.10	No. 14 Blast Furnace Casthouse Baghouse Stack	Normal ☑	Abnormal ☐	0820
D.7.10	Iron Beaching Facility	Normal ☑	Abnormal ☐	0801
D.8.11(a)	No. 1 BOP Gas Cleaning System Stack (North)	Normal ☑	Abnormal ☐	1005
D.8.11(a)	No. 1 BOP Gas Cleaning System Stack (South)	Normal ☑	Abnormal ☐	1002
D.8.11(a)	No. 1 BOP CASBell/OB Lancing Baghouse Stack	Normal ☑	Abnormal ☐	0950
D.9.13(a)	No. 2 QBOP Gas Cleaning System Stack (East)	Normal ☑	Abnormal ☐	0742
D.9.13(a)	No. 2 QBOP Gas Cleaning System Stack (West)	Normal ☑	Abnormal ☐	0744
D.9.13(a)	No. 2 QBOP Hot Metal Desulfurization Baghouse Stack	Normal ☑	Abnormal ☐	0828
D.9.13(a)	No. 2 QBOP Secondary Emissions Baghouse Stack	Normal ☑	Abnormal ☐	0833
D.14.8	No. 4 Boiler House No. 1 Boiler Stack	Normal ☑	Abnormal ☐	0855
D.14.8	No. 4 Boiler House No. 2 Boiler Stack	Normal ☑	Abnormal ☐	0858
D.15.13	Turbo Blower Boiler House Boiler No. 1 Stack	Normal ☑	Abnormal ☐	0904
D.15.13	Turbo Blower Boiler House Boiler No. 2 Stack	Normal ☑	Abnormal ☐	0909
D.15.13	Turbo Blower Boiler House Boiler No. 3 Stack	Normal ☑	Abnormal ☐	0912
D.15.13	Turbo Blower Boiler House Boiler No. 5 Stack	Normal ☑	Abnormal ☐	0917

If the facility is not operating, put the time and SD (for source down) in the Time column.

Title V Visible Emissions Notations
USS Gary Works

Date: 12/04/07
Inspector: [illegible]

Start Time: 0745
End Time: 1302

Monitor Point		Condition		Time
D.2.19	No. 2 Battery Scrubber Cars	Normal ☑	Abnormal ☐	0958
D.2.19	Nos. 5 and 7 Battery Pushing Emissions Baghouse Stack	Normal ☑	Abnormal ☐	0953
D.6.9	Sinter Plant Windbox Stack 1 (North)	Normal ☑	Abnormal ☐	1230
D.6.9	Sinter Plant Windbox Stack 2 (South)	Normal ☑	Abnormal ☐	1234
D.6.9	Sinter Plant Sinter Screening Station Baghouse Stack	Normal ☑	Abnormal ☐	1302
D.6.9	Sinter Plant Discharge Area Baghouse Stack 1	Normal ☑	Abnormal ☐	1239
D.6.9	Sinter Plant Discharge Area Baghouse Stack 3	Normal ☑	Abnormal ☐	1243
D.6.9	Sinter Plant Cooling Stack 1	Normal ☑	Abnormal ☐	1248
D.6.9	Sinter Plant Cooling Stack 3	Normal ☑	Abnormal ☐	1252
D.7.10	No. 14 Blast Furnace Casthouse Baghouse Stack	Normal ☑	Abnormal ☐	0831
D.7.10	Iron Beaching Facility	Normal ☑	Abnormal ☐	0805
D.8.11(a)	No. 1 BOP Gas Cleaning System Stack (North)	Normal ☑	Abnormal ☐	0822
D.8.11(a)	No. 1 BOP Gas Cleaning System Stack (South)	Normal ☑	Abnormal ☐	0826
D.8.11(a)	No. 1 BOP CASBell/OB Lancing Baghouse Stack	Normal ☑	Abnormal ☐	0929
D.9.13(a)	No. 2 QBOP Gas Cleaning System Stack (East)	Normal ☑	Abnormal ☐	0745
D.9.13(a)	No. 2 QBOP Gas Cleaning System Stack (West)	Normal ☑	Abnormal ☐	0749
D.9.13(a)	No. 2 QBOP Hot Metal Desulfurization Baghouse Stack	Normal ☑	Abnormal ☐	0937
D.9.13(a)	No. 2 QBOP Secondary Emissions Baghouse Stack	Normal ☑	Abnormal ☐	0941
D.14.8	No. 4 Boiler House No. 1 Boiler Stack	Normal ☑	Abnormal ☐	0842
D.14.8	No. 4 Boiler House No. 2 Boiler Stack	Normal ☑	Abnormal ☐	0846
D.15.13	Turbo Blower Boiler House Boiler No. 1 Stack	Normal ☑	Abnormal ☐	0851
D.15.13	Turbo Blower Boiler House Boiler No. 2 Stack	Normal ☑	Abnormal ☐	0854
D.15.13	Turbo Blower Boiler House Boiler No. 3 Stack	Normal ☑	Abnormal ☐	0858
D.15.13	Turbo Blower Boiler House Boiler No. 5 Stack	Normal ☑	Abnormal ☐	0902

If the facility is not operating, put the time and SD (for source down) in the Time column.

Title V Visible Emissions Notations
USS Gary Works

Date: 11/12/07
Inspector: [signature]

Start Time: 0657
End Time: 1329

Monitor Point		Condition		Time
D.2.19	No. 2 Battery Scrubber Cars	Normal ☑	Abnormal ☐	1325
D.2.19	Nos. 5 and 7 Battery Pushing Emissions Baghouse Stack	Normal ☑	Abnormal ☐	1329
D.6.9	Sinter Plant Windbox Stack 1 (North)	Normal ☑	Abnormal ☐	1122
D.6.9	Sinter Plant Windbox Stack 2 (South)	Normal ☑	Abnormal ☐	1127
D.6.9	Sinter Plant Sinter Screening Station Baghouse Stack	Normal ☑	Abnormal ☐	1048
D.6.9	Sinter Plant Discharge Area Baghouse Stack 1	Normal ☑	Abnormal ☐	1024
D.6.9	Sinter Plant Discharge Area Baghouse Stack 3	Normal ☑	Abnormal ☐	1033
D.6.9	Sinter Plant Cooling Stack 1	Normal ☑	Abnormal ☐	1029
D.6.9	Sinter Plant Cooling Stack 3	Normal ☑	Abnormal ☐	1038
D.7.10	No. 14 Blast Furnace Casthouse Baghouse Stack	Normal ☑	Abnormal ☐	0826
D.7.10	Iron Beaching Facility	Normal ☑	Abnormal ☐	1012
D.8.11(a)	No. 1 BOP Gas Cleaning System Stack (North)	Normal ☑	Abnormal ☐	0959
D.8.11(a)	No. 1 BOP Gas Cleaning System Stack (South)	Normal ☑	Abnormal ☐	1004
D.8.11(a)	No. 1 BOP CASBell/OB Lancing Baghouse Stack	Normal ☑	Abnormal ☐	0950
D.9.13(a)	No. 2 QBOP Gas Cleaning System Stack (East)	Normal ☑	Abnormal ☐	0657
D.9.13(a)	No. 2 QBOP Gas Cleaning System Stack (West)	Normal ☑	Abnormal ☐	0702
D.9.13(a)	No. 2 QBOP Hot Metal Desulfurization Baghouse Stack	Normal ☑	Abnormal ☐	0830
D.9.13(a)	No. 2 QBOP Secondary Emissions Baghouse Stack	Normal ☑	Abnormal ☐	0837
D.14.8	No. 4 Boiler House No. 1 Boiler Stack	Normal ☑	Abnormal ☐	0857
D.14.8	No. 4 Boiler House No. 2 Boiler Stack	Normal ☑	Abnormal ☐	0902
D.15.13	Turbo Blower Boiler House Boiler No. 1 Stack	Normal ☑	Abnormal ☐	0908
D.15.13	Turbo Blower Boiler House Boiler No. 2 Stack	Normal ☑	Abnormal ☐	0912
D.15.13	Turbo Blower Boiler House Boiler No. 3 Stack	Normal ☑	Abnormal ☐	0917
D.15.13	Turbo Blower Boiler House Boiler No. 5 Stack	Normal ☑	Abnormal ☐	0922

If the facility is not operating, put the time and SD (for source down) in the Time column.

Title V Visible Emissions Notations
USS Gary Works

Date: 11/16/07
Inspector: A. RICHARDSON

Start Time: 0630
End Time: 1215

Monitor Point		Condition		Time
D.2.19	No. 2 Battery Scrubber Cars	Normal ☒	Abnormal ☐	1215
D.2.19	Nos. 5 and 7 Battery Pushing Emissions Baghouse Stack	Normal ☒	Abnormal ☐	1210
D.6.9	Sinter Plant Windbox Stack 1 (North)	Normal ☒	Abnormal ☐	1000
D.6.9	Sinter Plant Windbox Stack 2 (South)	Normal ☒	Abnormal ☐	1005
D.6.9	Sinter Plant Sinter Screening Station Baghouse Stack	Normal ☒	Abnormal ☐	0950
D.6.9	Sinter Plant Discharge Area Baghouse Stack 1	Normal ☒	Abnormal ☐	0936
D.6.9	Sinter Plant Discharge Area Baghouse Stack 3	Normal ☒	Abnormal ☐	0939
D.6.9	Sinter Plant Cooling Stack 1	Normal ☒	Abnormal ☐	0930
D.6.9	Sinter Plant Cooling Stack 3	Normal ☒	Abnormal ☐	0933
D.7.10	No. 14 Blast Furnace Casthouse Baghouse Stack	Normal ☒	Abnormal ☐	0900
D.7.10	Iron Beaching Facility	Normal ☒	Abnormal ☐	0800
D.8.11(a)	No. 1 BOP Gas Cleaning System Stack (North)	Normal ☒	Abnormal ☐	0833
D.8.11(a)	No. 1 BOP Gas Cleaning System Stack (South)	Normal ☒	Abnormal ☐	0835
D.8.11(a)	No. 1 BOP CASBell/OB Lancing Baghouse Stack	Normal ☒	Abnormal ☐	0630
D.9.13(a)	No. 2 QBOP Gas Cleaning System Stack (East)	Normal ☒	Abnormal ☐	0825
D.9.13(a)	No. 2 QBOP Gas Cleaning System Stack (West)	Normal ☒	Abnormal ☐	0827
D.9.13(a)	No. 2 QBOP Hot Metal Desulfurization Baghouse Stack	Normal ☒	Abnormal ☐	1200
D.9.13(a)	No. 2 QBOP Secondary Emissions Baghouse Stack	Normal ☒	Abnormal ☐	1205
D.14.8	No. 4 Boiler House No. 1 Boiler Stack	Normal ☒	Abnormal ☐	0905
D.14.8	No. 4 Boiler House No. 2 Boiler Stack	Normal ☒	Abnormal ☐	0907
D.15.13	Turbo Blower Boiler House Boiler No. 1 Stack	Normal ☒	Abnormal ☐	0833
D.15.13	Turbo Blower Boiler House Boiler No. 2 Stack	Normal ☒	Abnormal ☐	0835
D.15.13	Turbo Blower Boiler House Boiler No. 3 Stack	Normal ☒	Abnormal ☐	0837
D.15.13	Turbo Blower Boiler House Boiler No. 5 Stack	Normal ☒	Abnormal ☐	0839

If the facility is not operating, put the time and SD (for source down) in the Time column.

Title V Visible Emissions Notations
USS Gary Works

Date: 11/18/07
Inspector: Lorene Patterson

Start Time: 0722
End Time: 1325

Monitor Point		Condition		Time
D.2.19	No. 2 Battery Scrubber Cars	Normal ☑	Abnormal ☐	1255
D.2.19	Nos. 5 and 7 Battery Pushing Emissions Baghouse Stack	Normal ☑	Abnormal ☐	1300
D.6.9	Sinter Plant Windbox Stack 1 (North)	Normal ☑	Abnormal ☐	1322
D.6.9	Sinter Plant Windbox Stack 2 (South)	Normal ☑	Abnormal ☐	1325
D.6.9	Sinter Plant Sinter Screening Station Baghouse Stack	Normal ☑	Abnormal ☐	1247
D.6.9	Sinter Plant Discharge Area Baghouse Stack 1	Normal ☑	Abnormal ☐	1230
D.6.9	Sinter Plant Discharge Area Baghouse Stack 3	Normal ☑	Abnormal ☐	1234
D.6.9	Sinter Plant Cooling Stack 1	Normal ☑	Abnormal ☐	1224
D.6.9	Sinter Plant Cooling Stack 3	Normal ☑	Abnormal ☐	1226
D.7.10	No. 14 Blast Furnace Casthouse Baghouse Stack	Normal ☑	Abnormal ☐	1038
D.7.10	Iron Beaching Facility	Normal ☑	Abnormal ☐	1019
D.8.11(a)	No. 1 BOP Gas Cleaning System Stack (North)	Normal ☑	Abnormal ☐	1220
D.8.11(a)	No. 1 BOP Gas Cleaning System Stack (South)	Normal ☑	Abnormal ☐	1225
D.8.11(a)	No. 1 BOP CASBell/OB Lancing Baghouse Stack	Normal ☑	Abnormal ☐	1212
D.9.13(a)	No. 2 QBOP Gas Cleaning System Stack (East)	Normal ☑	Abnormal ☐	0722
D.9.13(a)	No. 2 QBOP Gas Cleaning System Stack (West)	Normal ☑	Abnormal ☐	0725
D.9.13(a)	No. 2 QBOP Hot Metal Desulfurization Baghouse Stack	Normal ☑	Abnormal ☐	1044
D.9.13(a)	No. 2 QBOP Secondary Emissions Baghouse Stack	Normal ☑	Abnormal ☐	1050
D.14.8	No. 4 Boiler House No. 1 Boiler Stack	Normal ☑	Abnormal ☐	1115
D.14.8	No. 4 Boiler House No. 2 Boiler Stack	Normal ☑	Abnormal ☐	1120
D.15.13	Turbo Blower Boiler House Boiler No. 1 Stack	Normal ☑	Abnormal ☐	1124
D.15.13	Turbo Blower Boiler House Boiler No. 2 Stack	Normal ☑	Abnormal ☐	1128
D.15.13	Turbo Blower Boiler House Boiler No. 3 Stack	Normal ☑	Abnormal ☐	1133
D.15.13	Turbo Blower Boiler House Boiler No. 5 Stack	Normal ☑	Abnormal ☐	1137

If the facility is not operating, put the time and SD (for source down) in the Time column.

Title V Visible Emissions Notations
USS Gary Works

Date: 12/07/07
Inspector: A. RICHARDSON

Start Time: 0645
End Time: 1230

Monitor Point		Condition		Time
D.2.19	No. 2 Battery Scrubber Cars 9122	Normal ☒	Abnormal ☐	0807
D.2.19	Nos. 5 and 7 Battery Pushing Emissions Baghouse Stack	Normal ☒	Abnormal ☐	1005
D.6.9	Sinter Plant Windbox Stack 1 (North)	Normal ☒	Abnormal ☐	1110
D.6.9	Sinter Plant Windbox Stack 2 (South)	Normal ☒	Abnormal ☐	1112
D.6.9	Sinter Plant Sinter Screening Station Baghouse Stack	Normal ☒	Abnormal ☐	1058
D.6.9	Sinter Plant Discharge Area Baghouse Stack 1	Normal ☒	Abnormal ☐	1047
D.6.9	Sinter Plant Discharge Area Baghouse Stack 3	Normal ☒	Abnormal ☐	1049
D.6.9	Sinter Plant Cooling Stack 1	Normal ☒	Abnormal ☐	1040
D.6.9	Sinter Plant Cooling Stack 3	Normal ☒	Abnormal ☐	1042
D.7.10	No. 14 Blast Furnace Casthouse Baghouse Stack	Normal ☒	Abnormal ☐	0920
D.7.10	Iron Beaching Facility	Normal ☒	Abnormal ☐	0830
D.8.11(a)	No. 1 BOP Gas Cleaning System Stack (North)	Normal ☒	Abnormal ☐	0826
D.8.11(a)	No. 1 BOP Gas Cleaning System Stack (South)	Normal ☒	Abnormal ☐	0828
D.8.11(a)	No. 1 BOP CASBell/OB Lancing Baghouse Stack	Normal ☒	Abnormal ☐	0645
D.9.13(a)	No. 2 QBOP Gas Cleaning System Stack (East)	Normal ☒	Abnormal ☐	0815
D.9.13(a)	No. 2 QBOP Gas Cleaning System Stack (West)	Normal ☒	Abnormal ☐	0818
D.9.13(a)	No. 2 QBOP Hot Metal Desulfurization Baghouse Stack	Normal ☒	Abnormal ☐	0940
D.9.13(a)	No. 2 QBOP Secondary Emissions Baghouse Stack	Normal ☒	Abnormal ☐	0945
D.14.8	No. 4 Boiler House No. 1 Boiler Stack	Normal ☒	Abnormal ☐	0923
D.14.8	No. 4 Boiler House No. 2 Boiler Stack	Normal ☒	Abnormal ☐	0925
D.15.13	Turbo Blower Boiler House Boiler No. 1 Stack	Normal ☒	Abnormal ☐	0900
D.15.13	Turbo Blower Boiler House Boiler No. 2 Stack	Normal ☒	Abnormal ☐	0903
D.15.13	Turbo Blower Boiler House Boiler No. 3 Stack	Normal ☒	Abnormal ☐	0906
D.15.13	Turbo Blower Boiler House Boiler No. 5 Stack	Normal ☒	Abnormal ☐	0909

If the facility is not operating, put the time and SD (for source down) in the Time column.

Title V Visible Emissions Notations
USS Gary Works

Date: 11/14/07
Inspector: A RICHARDSON

Start Time: 0630
End Time: 1230

Monitor Point		Condition		Time
D.2.19	No. 2 Battery Scrubber Cars	Normal ☒	Abnormal ☐	1152
D.2.19	Nos. 5 and 7 Battery Pushing Emissions Baghouse Stack	Normal ☒	Abnormal ☐	1150
D.6.9	Sinter Plant Windbox Stack 1 (North)	Normal ☒	Abnormal ☐	1142
D.6.9	Sinter Plant Windbox Stack 2 (South)	Normal ☒	Abnormal ☐	1144
D.6.9	Sinter Plant Sinter Screening Station Baghouse Stack	Normal ☒	Abnormal ☐	1115
D.6.9	Sinter Plant Discharge Area Baghouse Stack 1	Normal ☒	Abnormal ☐	1100
D.6.9	Sinter Plant Discharge Area Baghouse Stack 3	Normal ☒	Abnormal ☐	1103
D.6.9	Sinter Plant Cooling Stack 1	Normal ☒	Abnormal ☐	1050
D.6.9	Sinter Plant Cooling Stack 3	Normal ☒	Abnormal ☐	1055
D.7.10	No. 14 Blast Furnace Casthouse Baghouse Stack	Normal ☒	Abnormal ☐	0850
D.7.10	Iron Beaching Facility	Normal ☒	Abnormal ☐	0804
D.8.11(a)	No. 1 BOP Gas Cleaning System Stack (North)	Normal ☒	Abnormal ☐	0815
D.8.11(a)	No. 1 BOP Gas Cleaning System Stack (South)	Normal ☒	Abnormal ☐	0817
D.8.11(a)	No. 1 BOP CASBell/OB Lancing Baghouse Stack	Normal ☒	Abnormal ☐	0630
D.9.13(a)	No. 2 QBOP Gas Cleaning System Stack (East)	Normal ☒	Abnormal ☐	0735
D.9.13(a)	No. 2 QBOP Gas Cleaning System Stack (West)	Normal ☒	Abnormal ☐	0737
D.9.13(a)	No. 2 QBOP Hot Metal Desulfurization Baghouse Stack	Normal ☒	Abnormal ☐	0940
D.9.13(a)	No. 2 QBOP Secondary Emissions Baghouse Stack	Normal ☒	Abnormal ☐	0945
D.14.8	No. 4 Boiler House No. 1 Boiler Stack	Normal ☒	Abnormal ☐	0855
D.14.8	No. 4 Boiler House No. 2 Boiler Stack	Normal ☒	Abnormal ☐	0900
D.15.13	Turbo Blower Boiler House Boiler No. 1 Stack	Normal ☒	Abnormal ☐	0825
D.15.13	Turbo Blower Boiler House Boiler No. 2 Stack	Normal ☒	Abnormal ☐	0828
D.15.13	Turbo Blower Boiler House Boiler No. 3 Stack	Normal ☒	Abnormal ☐	0832
D.15.13	Turbo Blower Boiler House Boiler No. 5 Stack	Normal ☒	Abnormal ☐	0835

If the facility is not operating, put the time and SD (for source down) in the Time column.

Title V Visible Emissions Notations
USS Gary Works

Date: 11/13/07
Inspector: [illegible]

Start Time: 0749
End Time: 1139

Monitor Point		Condition		Time
D.2.19	No. 2 Battery Scrubber Cars	Normal ☑	Abnormal ☐	1101
D.2.19	Nos. 5 and 7 Battery Pushing Emissions Baghouse Stack	Normal ☑	Abnormal ☐	1053
D.6.9	Sinter Plant Windbox Stack 1 (North)	Normal ☑	Abnormal ☐	1134
D.6.9	Sinter Plant Windbox Stack 2 (South)	Normal ☑	Abnormal ☐	1139
D.6.9	Sinter Plant Sinter Screening Station Baghouse Stack	Normal ☑	Abnormal ☐	1127
D.6.9	Sinter Plant Discharge Area Baghouse Stack 1	Normal ☑	Abnormal ☐	1112
D.6.9	Sinter Plant Discharge Area Baghouse Stack 3	Normal ☑	Abnormal ☐	1121
D.6.9	Sinter Plant Cooling Stack 1	Normal ☑	Abnormal ☐	1108
D.6.9	Sinter Plant Cooling Stack 3	Normal ☑	Abnormal ☐	1117
D.7.10	No. 14 Blast Furnace Casthouse Baghouse Stack	Normal ☑	Abnormal ☐	0835
D.7.10	Iron Beaching Facility	Normal ☑	Abnormal ☐	0814
D.8.11(a)	No. 1 BOP Gas Cleaning System Stack (North)	Normal ☑	Abnormal ☐	1024
D.8.11(a)	No. 1 BOP Gas Cleaning System Stack (South)	Normal ☑	Abnormal ☐	1030
D.8.11(a)	No. 1 BOP CASBell/OB Lancing Baghouse Stack	Normal ☑	Abnormal ☐	1014
D.9.13(a)	No. 2 QBOP Gas Cleaning System Stack (East)	Normal ☑	Abnormal ☐	0749
D.9.13(a)	No. 2 QBOP Gas Cleaning System Stack (West)	Normal ☑	Abnormal ☐	0753
D.9.13(a)	No. 2 QBOP Hot Metal Desulfurization Baghouse Stack	Normal ☑	Abnormal ☐	0938
D.9.13(a)	No. 2 QBOP Secondary Emissions Baghouse Stack	Normal ☑	Abnormal ☐	0944
D.14.8	No. 4 Boiler House No. 1 Boiler Stack	Normal ☑	Abnormal ☐	0854
D.14.8	No. 4 Boiler House No. 2 Boiler Stack	Normal ☑	Abnormal ☐	0859
D.15.13	Turbo Blower Boiler House Boiler No. 1 Stack	Normal ☑	Abnormal ☐	0905
D.15.13	Turbo Blower Boiler House Boiler No. 2 Stack	Normal ☑	Abnormal ☐	0910
D.15.13	Turbo Blower Boiler House Boiler No. 3 Stack	Normal ☑	Abnormal ☐	0916
D.15.13	Turbo Blower Boiler House Boiler No. 5 Stack	Normal ☑	Abnormal ☐	0923

If the facility is not operating, put the time and SD (for source down) in the Time column.

Title V Visible Emissions Notations
USS Gary Works

Date: 11/20/07
Inspector: A. RICHARDSON

Start Time: 0630
End Time: 1230

Monitor Point		Condition		Time
D.2.19	No. 2 Battery Scrubber Cars	Normal ☒	Abnormal ☐	1216
D.2.19	Nos. 5 and 7 Battery Pushing Emissions Baghouse Stack	Normal ☒	Abnormal ☐	1218
D.6.9	Sinter Plant Windbox Stack 1 (North)	Normal ☒	Abnormal ☐	1130
D.6.9	Sinter Plant Windbox Stack 2 (South)	Normal ☒	Abnormal ☐	1132
D.6.9	Sinter Plant Sinter Screening Station Baghouse Stack	Normal ☒	Abnormal ☐	1105
D.6.9	Sinter Plant Discharge Area Baghouse Stack 1	Normal ☒	Abnormal ☐	1050
D.6.9	Sinter Plant Discharge Area Baghouse Stack 3	Normal ☒	Abnormal ☐	1052
D.6.9	Sinter Plant Cooling Stack 1	Normal ☒	Abnormal ☐	1040
D.6.9	Sinter Plant Cooling Stack 3	Normal ☒	Abnormal ☐	1042
D.7.10	No. 14 Blast Furnace Casthouse Baghouse Stack	Normal ☒	Abnormal ☐	0855
D.7.10	Iron Beaching Facility	Normal ☒	Abnormal ☐	0815
D.8.11(a)	No. 1 BOP Gas Cleaning System Stack (North)	Normal ☒	Abnormal ☐	0740
D.8.11(a)	No. 1 BOP Gas Cleaning System Stack (South)	Normal ☒	Abnormal ☐	0743
D.8.11(a)	No. 1 BOP CASBell/OB Lancing Baghouse Stack	Normal ☒	Abnormal ☐	0635
D.9.13(a)	No. 2 QBOP Gas Cleaning System Stack (East)	Normal ☒	Abnormal ☐	0730
D.9.13(a)	No. 2 QBOP Gas Cleaning System Stack (West)	Normal ☒	Abnormal ☐	0733
D.9.13(a)	No. 2 QBOP Hot Metal Desulfurization Baghouse Stack	Normal ☒	Abnormal ☐	0930
D.9.13(a)	No. 2 QBOP Secondary Emissions Baghouse Stack	Normal ☒	Abnormal ☐	0935
D.14.8	No. 4 Boiler House No. 1 Boiler Stack	Normal ☒	Abnormal ☐	0905
D.14.8	No. 4 Boiler House No. 2 Boiler Stack	Normal ☒	Abnormal ☐	0907
D.15.13	Turbo Blower Boiler House Boiler No. 1 Stack	Normal ☒	Abnormal ☐	0832
D.15.13	Turbo Blower Boiler House Boiler No. 2 Stack	Normal ☒	Abnormal ☐	0835
D.15.13	Turbo Blower Boiler House Boiler No. 3 Stack	Normal ☒	Abnormal ☐	0837
D.15.13	Turbo Blower Boiler House Boiler No. 5 Stack	Normal ☒	Abnormal ☐	0839

If the facility is not operating, put the time and SD (for source down) in the Time column.

Title V Visible Emissions Notations
USS Gary Works

Date: 11/15/07
Inspector: N. RICHARDSON

Start Time: 0630
End Time: 1230

Monitor Point		Condition		Time
D.2.19	No. 2 Battery Scrubber Cars	Normal ☒	Abnormal ☐	1142
D.2.19	Nos. 5 and 7 Battery Pushing Emissions Baghouse Stack	Normal ☒	Abnormal ☐	1143
D.6.9	Sinter Plant Windbox Stack 1 (North)	Normal ☒	Abnormal ☐	1220
D.6.9	Sinter Plant Windbox Stack 2 (South)	Normal ☒	Abnormal ☐	1222
D.6.9	Sinter Plant Sinter Screening Station Baghouse Stack	Normal ☒	Abnormal ☐	1210
D.6.9	Sinter Plant Discharge Area Baghouse Stack 1	Normal ☒	Abnormal ☐	1149
D.6.9	Sinter Plant Discharge Area Baghouse Stack 3	Normal ☒	Abnormal ☐	1201
D.6.9	Sinter Plant Cooling Stack 1	Normal ☒	Abnormal ☐	1145
D.6.9	Sinter Plant Cooling Stack 3	Normal ☒	Abnormal ☐	1147
D.7.10	No. 14 Blast Furnace Casthouse Baghouse Stack	Normal ☒	Abnormal ☐	0910
D.7.10	Iron Beaching Facility	Normal ☒	Abnormal ☐	0805
D.8.11(a)	No. 1 BOP Gas Cleaning System Stack (North)	Normal ☒	Abnormal ☐	0835
D.8.11(a)	No. 1 BOP Gas Cleaning System Stack (South)	Normal ☒	Abnormal ☐	0838
D.8.11(a)	No. 1 BOP CASBell/OB Lancing Baghouse Stack	Normal ☒	Abnormal ☐	0630
D.9.13(a)	No. 2 QBOP Gas Cleaning System Stack (East)	Normal ☒	Abnormal ☐	0730
D.9.13(a)	No. 2 QBOP Gas Cleaning System Stack (West)	Normal ☒	Abnormal ☐	0732
D.9.13(a)	No. 2 QBOP Hot Metal Desulfurization Baghouse Stack	Normal ☒	Abnormal ☐	0940
D.9.13(a)	No. 2 QBOP Secondary Emissions Baghouse Stack	Normal ☒	Abnormal ☐	0945
D.14.8	No. 4 Boiler House No. 1 Boiler Stack	Normal ☒	Abnormal ☐	0912
D.14.8	No. 4 Boiler House No. 2 Boiler Stack	Normal ☒	Abnormal ☐	0914
D.15.13	Turbo Blower Boiler House Boiler No. 1 Stack	Normal ☒	Abnormal ☐	0840
D.15.13	Turbo Blower Boiler House Boiler No. 2 Stack	Normal ☒	Abnormal ☐	0842
D.15.13	Turbo Blower Boiler House Boiler No. 3 Stack	Normal ☒	Abnormal ☐	0844
D.15.13	Turbo Blower Boiler House Boiler No. 5 Stack	Normal ☒	Abnormal ☐	0846

If the facility is not operating, put the time and SD (for source down) in the Time column.

Title V Visible Emissions Notations
USS Gary Works

Date: 11-22-07
Inspector: J. SKALK

Start Time: 0722
End Time: 1403

Monitor Point		Condition		Time
D.2.19	No. 2 Battery Scrubber Cars	Normal ☑	Abnormal ☐	0722
D.2.19	Nos. 5 and 7 Battery Pushing Emissions Baghouse Stack	Normal ☑	Abnormal ☐	0735
D.6.9	Sinter Plant Windbox Stack 1 (North)	Normal ☑	Abnormal ☐	1207
D.6.9	Sinter Plant Windbox Stack 2 (South)	Normal ☑	Abnormal ☐	1212
D.6.9	Sinter Plant Sinter Screening Station Baghouse Stack	Normal ☑	Abnormal ☐	1247
D.6.9	Sinter Plant Discharge Area Baghouse Stack 1	Normal ☑	Abnormal ☐	1236
D.6.9	Sinter Plant Discharge Area Baghouse Stack 3	Normal ☑	Abnormal ☐	1230
D.6.9	Sinter Plant Cooling Stack 1	Normal ☑	Abnormal ☐	1220
D.6.9	Sinter Plant Cooling Stack 3	Normal ☑	Abnormal ☐	1225
D.7.10	No. 14 Blast Furnace Casthouse Baghouse Stack	Normal ☑	Abnormal ☐	1133
D.7.10	Iron Beaching Facility	Normal ☑	Abnormal ☐	1055-SD
D.8.11(a)	No. 1 BOP Gas Cleaning System Stack (North)	Normal ☑	Abnormal ☐	0818
D.8.11(a)	No. 1 BOP Gas Cleaning System Stack (South)	Normal ☑	Abnormal ☐	0821
D.8.11(a)	No. 1 BOP CASBell/OB Lancing Baghouse Stack	Normal ☑	Abnormal ☐	0757
D.9.13(a)	No. 2 QBOP Gas Cleaning System Stack (East)	Normal ☑	Abnormal ☐	0830
D.9.13(a)	No. 2 QBOP Gas Cleaning System Stack (West)	Normal ☑	Abnormal ☐	0833
D.9.13(a)	No. 2 QBOP Hot Metal Desulfurization Baghouse Stack	Normal ☑	Abnormal ☐	1117
D.9.13(a)	No. 2 QBOP Secondary Emissions Baghouse Stack	Normal ☑	Abnormal ☐	1112
D.14.8	No. 4 Boiler House No. 1 Boiler Stack	Normal ☑	Abnormal ☐	1149
D.14.8	No. 4 Boiler House No. 2 Boiler Stack	Normal ☑	Abnormal ☐	1152
D.15.13	Turbo Blower Boiler House Boiler No. 1 Stack	Normal ☑	Abnormal ☐	1351
D.15.13	Turbo Blower Boiler House Boiler No. 2 Stack	Normal ☑	Abnormal ☐	1354
D.15.13	Turbo Blower Boiler House Boiler No. 3 Stack	Normal ☑	Abnormal ☐	1357
D.15.13	Turbo Blower Boiler House Boiler No. 5 Stack	Normal ☑	Abnormal ☐	1400

If the facility is not operating, put the time and SD (for source down) in the Time column.

Title V Visible Emissions Notations
USS Gary Works

Date: 11/09/07
Inspector: A. RICHARDSON

Start Time: 0630
End Time: 1230

Monitor Point		Condition		Time
D.2.19	No. 2 Battery Scrubber Cars	Normal ☒	Abnormal ☐	1225
D.2.19	Nos. 5 and 7 Battery Pushing Emissions Baghouse Stack	Normal ☒	Abnormal ☐	1229
D.6.9	Sinter Plant Windbox Stack 1 (North)	Normal ☒	Abnormal ☐	1130
D.6.9	Sinter Plant Windbox Stack 2 (South)	Normal ☒	Abnormal ☐	1132
D.6.9	Sinter Plant Sinter Screening Station Baghouse Stack	Normal ☒	Abnormal ☐	1110
D.6.9	Sinter Plant Discharge Area Baghouse Stack 1	Normal ☒	Abnormal ☐	1056
D.6.9	Sinter Plant Discharge Area Baghouse Stack 3	Normal ☒	Abnormal ☐	1059
D.6.9	Sinter Plant Cooling Stack 1	Normal ☒	Abnormal ☐	1050
D.6.9	Sinter Plant Cooling Stack 3	Normal ☒	Abnormal ☐	1053
D.7.10	No. 14 Blast Furnace Casthouse Baghouse Stack	Normal ☒	Abnormal ☐	0900
D.7.10	Iron Beaching Facility	Normal ☒	Abnormal ☐	0743
D.8.11(a)	No. 1 BOP Gas Cleaning System Stack (North)	Normal ☒	Abnormal ☐	820
D.8.11(a)	No. 1 BOP Gas Cleaning System Stack (South)	Normal ☒	Abnormal ☐	825
D.8.11(a)	No. 1 BOP CASBell/OB Lancing Baghouse Stack	Normal ☒	Abnormal ☐	0630
D.9.13(a)	No. 2 QBOP Gas Cleaning System Stack (East)	Normal ☒	Abnormal ☐	0735
D.9.13(a)	No. 2 QBOP Gas Cleaning System Stack (West)	Normal ☒	Abnormal ☐	0738
D.9.13(a)	No. 2 QBOP Hot Metal Desulfurization Baghouse Stack	Normal ☒	Abnormal ☐	0930
D.9.13(a)	No. 2 QBOP Secondary Emissions Baghouse Stack	Normal ☒	Abnormal ☐	0935
D.14.8	No. 4 Boiler House No. 1 Boiler Stack	Normal ☒	Abnormal ☐	0905
D.14.8	No. 4 Boiler House No. 2 Boiler Stack	Normal ☒	Abnormal ☐	0908
D.15.13	Turbo Blower Boiler House Boiler No. 1 Stack	Normal ☒	Abnormal ☐	0835
D.15.13	Turbo Blower Boiler House Boiler No. 2 Stack	Normal ☒	Abnormal ☐	0837
D.15.13	Turbo Blower Boiler House Boiler No. 3 Stack	Normal ☒	Abnormal ☐	0839
D.15.13	Turbo Blower Boiler House Boiler No. 5 Stack	Normal ☒	Abnormal ☐	0841

If the facility is not operating, put the time and SD (for source down) in the Time column.

Title V Visible Emissions Notations
USS Gary Works

Date: 12/06/07
Inspector: A. RICHARDSON

Start Time: 0645
End Time: 1230

Monitor Point		Condition		Time
D.2.19	No. 2 Battery Scrubber Cars	Normal ☒	Abnormal ☐	1205
D.2.19	Nos. 5 and 7 Battery Pushing Emissions Baghouse Stack	Normal ☒	Abnormal ☐	1150
D.6.9	Sinter Plant Windbox Stack 1 (North)	Normal ☒	Abnormal ☐	0950
D.6.9	Sinter Plant Windbox Stack 2 (South)	Normal ☒	Abnormal ☐	0953
D.6.9	Sinter Plant Sinter Screening Station Baghouse Stack	Normal ☒	Abnormal ☐	0934
D.6.9	Sinter Plant Discharge Area Baghouse Stack 1	Normal ☒	Abnormal ☐	0921
D.6.9	Sinter Plant Discharge Area Baghouse Stack 3	Normal ☒	Abnormal ☐	0923
D.6.9	Sinter Plant Cooling Stack 1	Normal ☒	Abnormal ☐	0915
D.6.9	Sinter Plant Cooling Stack 3	Normal ☒	Abnormal ☐	0918
D.7.10	No. 14 Blast Furnace Casthouse Baghouse Stack	Normal ☒	Abnormal ☐	1120
D.7.10	Iron Beaching Facility	Normal ☒	Abnormal ☐	0755
D.8.11(a)	No. 1 BOP Gas Cleaning System Stack (North)	Normal ☒	Abnormal ☐	0820
D.8.11(a)	No. 1 BOP Gas Cleaning System Stack (South)	Normal ☒	Abnormal ☐	0822
D.8.11(a)	No. 1 BOP CASBell/OB Lancing Baghouse Stack	Normal ☒	Abnormal ☐	0645
D.9.13(a)	No. 2 QBOP Gas Cleaning System Stack (East)	Normal ☒	Abnormal ☐	0747
D.9.13(a)	No. 2 QBOP Gas Cleaning System Stack (West)	Normal ☒	Abnormal ☐	0749
D.9.13(a)	No. 2 QBOP Hot Metal Desulfurization Baghouse Stack	Normal ☒	Abnormal ☐	1140
D.9.13(a)	No. 2 QBOP Secondary Emissions Baghouse Stack	Normal ☒	Abnormal ☐	1145
D.14.8	No. 4 Boiler House No. 1 Boiler Stack	Normal ☒	Abnormal ☐	1125
D.14.8	No. 4 Boiler House No. 2 Boiler Stack	Normal ☒	Abnormal ☐	1127
D.15.13	Turbo Blower Boiler House Boiler No. 1 Stack	Normal ☒	Abnormal ☐	1100
D.15.13	Turbo Blower Boiler House Boiler No. 2 Stack	Normal ☒	Abnormal ☐	1102
D.15.13	Turbo Blower Boiler House Boiler No. 3 Stack	Normal ☒	Abnormal ☐	1104
D.15.13	Turbo Blower Boiler House Boiler No. 5 Stack	Normal ☒	Abnormal ☐	1106

If the facility is not operating, put the time and SD (for source down) in the Time column.

Title V Visible Emissions Notations
USS Gary Works

Date: 11/29/07
Inspector: A. RICHARDSON

Start Time: 0630
End Time: 1442

Monitor Point		Condition		Time
D.2.19	No. 2 Battery Scrubber Cars	Normal ☒	Abnormal ☐	1320
D.2.19	Nos. 5 and 7 Battery Pushing Emissions Baghouse Stack	Normal ☒	Abnormal ☐	1325
D.6.9	Sinter Plant Windbox Stack 1 (North)	Normal ☒	Abnormal ☐	1355
D.6.9	Sinter Plant Windbox Stack 2 (South)	Normal ☒	Abnormal ☐	1358
D.6.9	Sinter Plant Sinter Screening Station Baghouse Stack	Normal ☒	Abnormal ☐	1348
D.6.9	Sinter Plant Discharge Area Baghouse Stack 1	Normal ☒	Abnormal ☐	1318
D.6.9	Sinter Plant Discharge Area Baghouse Stack 3	Normal ☒	Abnormal ☐	1321
D.6.9	Sinter Plant Cooling Stack 1	Normal ☒	Abnormal ☐	1310
D.6.9	Sinter Plant Cooling Stack 3	Normal ☒	Abnormal ☐	1313
D.7.10	No. 14 Blast Furnace Casthouse Baghouse Stack	Normal ☒	Abnormal ☐	1230
D.7.10	Iron Beaching Facility	Normal ☒	Abnormal ☐	0825
D.8.11(a)	No. 1 BOP Gas Cleaning System Stack (North)	Normal ☒	Abnormal ☐	0757
D.8.11(a)	No. 1 BOP Gas Cleaning System Stack (South)	Normal ☒	Abnormal ☐	0759
D.8.11(a)	No. 1 BOP CASBell/OB Lancing Baghouse Stack	Normal ☒	Abnormal ☐	0645
D.9.13(a)	No. 2 QBOP Gas Cleaning System Stack (East)	Normal ☒	Abnormal ☐	0750
D.9.13(a)	No. 2 QBOP Gas Cleaning System Stack (West)	Normal ☒	Abnormal ☐	0753
D.9.13(a)	No. 2 QBOP Hot Metal Desulfurization Baghouse Stack	Normal ☒	Abnormal ☐	1300
D.9.13(a)	No. 2 QBOP Secondary Emissions Baghouse Stack	Normal ☒	Abnormal ☐	1305
D.14.8	No. 4 Boiler House No. 1 Boiler Stack	Normal ☒	Abnormal ☐	1240
D.14.8	No. 4 Boiler House No. 2 Boiler Stack	Normal ☒	Abnormal ☐	1243
D.15.13	Turbo Blower Boiler House Boiler No. 1 Stack	Normal ☒	Abnormal ☐	0845
D.15.13	Turbo Blower Boiler House Boiler No. 2 Stack	Normal ☒	Abnormal ☐	0848
D.15.13	Turbo Blower Boiler House Boiler No. 3 Stack	Normal ☒	Abnormal ☐	0850
D.15.13	Turbo Blower Boiler House Boiler No. 5 Stack	Normal ☒	Abnormal ☐	0852

If the facility is not operating, put the time and SD (for source down) in the Time column.

Title V Visible Emissions Notations
USS Gary Works

Date: 12/05/07
Inspector: A. RICHARDSON

Start Time: 06 30
End Time: 12 30

Monitor Point		Condition		Time
D.2.19	No. 2 Battery Scrubber Cars 9127	Normal ☒	Abnormal ☐	1229
D.2.19	Nos. 5 and 7 Battery Pushing Emissions Baghouse Stack	Normal ☒	Abnormal ☐	1225
D.6.9	Sinter Plant Windbox Stack 1 (North)	Normal ☒	Abnormal ☐	1135
D.6.9	Sinter Plant Windbox Stack 2 (South)	Normal ☒	Abnormal ☐	1140
D.6.9	Sinter Plant Sinter Screening Station Baghouse Stack	Normal ☒	Abnormal ☐	1115
D.6.9	Sinter Plant Discharge Area Baghouse Stack 1	Normal ☒	Abnormal ☐	1048
D.6.9	Sinter Plant Discharge Area Baghouse Stack 3	Normal ☒	Abnormal ☐	1050
D.6.9	Sinter Plant Cooling Stack 1	Normal ☒	Abnormal ☐	1040
D.6.9	Sinter Plant Cooling Stack 3	Normal ☒	Abnormal ☐	1043
D.7.10	No. 14 Blast Furnace Casthouse Baghouse Stack	Normal ☒	Abnormal ☐	0910
D.7.10	Iron Beaching Facility	Normal ☒	Abnormal ☐	0810
D.8.11(a)	No. 1 BOP Gas Cleaning System Stack (North)	Normal ☒	Abnormal ☐	0835
D.8.11(a)	No. 1 BOP Gas Cleaning System Stack (South)	Normal ☒	Abnormal ☐	0837
D.8.11(a)	No. 1 BOP CASBell/OB Lancing Baghouse Stack	Normal ☒	Abnormal ☐	0645
D.9.13(a)	No. 2 QBOP Gas Cleaning System Stack (East)	Normal ☒	Abnormal ☐	0735
D.9.13(a)	No. 2 QBOP Gas Cleaning System Stack (West)	Normal ☒	Abnormal ☐	0740
D.9.13(a)	No. 2 QBOP Hot Metal Desulfurization Baghouse Stack	Normal ☒	Abnormal ☐	0935
D.9.13(a)	No. 2 QBOP Secondary Emissions Baghouse Stack	Normal ☒	Abnormal ☐	0940
D.14.8	No. 4 Boiler House No. 1 Boiler Stack	Normal ☒	Abnormal ☐	0915
D.14.8	No. 4 Boiler House No. 2 Boiler Stack	Normal ☒	Abnormal ☐	0917
D.15.13	Turbo Blower Boiler House Boiler No. 1 Stack	Normal ☒	Abnormal ☐	0845
D.15.13	Turbo Blower Boiler House Boiler No. 2 Stack	Normal ☒	Abnormal ☐	0847
D.15.13	Turbo Blower Boiler House Boiler No. 3 Stack	Normal ☒	Abnormal ☐	0848
D.15.13	Turbo Blower Boiler House Boiler No. 5 Stack	Normal ☒	Abnormal ☐	0850

If the facility is not operating, put the time and SD (for source down) in the Time column.

Title V Visible Emissions Notations
USS Gary Works

Date: 11-25-07
Inspector: J. SKALUK

Start Time: 0657
End Time: 1418

Monitor Point		Condition		Time
D.2.19	No. 2 Battery Scrubber Cars	Normal ☑	Abnormal ☐	0657
D.2.19	Nos. 5 and 7 Battery Pushing Emissions Baghouse Stack	Normal ☑	Abnormal ☐	0750
D.6.9	Sinter Plant Windbox Stack 1 (North)	Normal ☑	Abnormal ☐	0738
D.6.9	Sinter Plant Windbox Stack 2 (South)	Normal ☑	Abnormal ☐	0733
D.6.9	Sinter Plant Sinter Screening Station Baghouse Stack	Normal ☑	Abnormal ☐	1413
D.6.9	Sinter Plant Discharge Area Baghouse Stack 1	Normal ☑	Abnormal ☐	1402
D.6.9	Sinter Plant Discharge Area Baghouse Stack 3	Normal ☑	Abnormal ☐	1356
D.6.9	Sinter Plant Cooling Stack 1	Normal ☑	Abnormal ☐	1346
D.6.9	Sinter Plant Cooling Stack 3	Normal ☑	Abnormal ☐	1351
D.7.10	No. 14 Blast Furnace Casthouse Baghouse Stack	Normal ☑	Abnormal ☐	1223
D.7.10	Iron Beaching Facility	Normal ☑	Abnormal ☐	1136- S.D
D.8.11(a)	No. 1 BOP Gas Cleaning System Stack (North)	Normal ☑	Abnormal ☐	0944
D.8.11(a)	No. 1 BOP Gas Cleaning System Stack (South)	Normal ☑	Abnormal ☐	0941
D.8.11(a)	No. 1 BOP CASBell/OB Lancing Baghouse Stack	Normal ☑	Abnormal ☐	0924
D.9.13(a)	No. 2 QBOP Gas Cleaning System Stack (East)	Normal ☑	Abnormal ☐	0950
D.9.13(a)	No. 2 QBOP Gas Cleaning System Stack (West)	Normal ☑	Abnormal ☐	0953
D.9.13(a)	No. 2 QBOP Hot Metal Desulfurization Baghouse Stack	Normal ☑	Abnormal ☐	1206
D.9.13(a)	No. 2 QBOP Secondary Emissions Baghouse Stack	Normal ☑	Abnormal ☐	1201
D.14.8	No. 4 Boiler House No. 1 Boiler Stack	Normal ☑	Abnormal ☐	1238
D.14.8	No. 4 Boiler House No. 2 Boiler Stack	Normal ☑	Abnormal ☐	1241
D.15.13	Turbo Blower Boiler House Boiler No. 1 Stack	Normal ☑	Abnormal ☐	1322
D.15.13	Turbo Blower Boiler House Boiler No. 2 Stack	Normal ☑	Abnormal ☐	1325
D.15.13	Turbo Blower Boiler House Boiler No. 3 Stack	Normal ☑	Abnormal ☐	1328
D.15.13	Turbo Blower Boiler House Boiler No. 5 Stack	Normal ☑	Abnormal ☐	1331

If the facility is not operating, put the time and SD (for source down) in the Time column.

Title V Visible Emissions Notations
USS Gary Works

Date: 11/26/07
Inspector: A. Richardson

Start Time: 0630
End Time: 1230

Monitor Point		Condition		Time
D.2.19	No. 2 Battery Scrubber Cars	Normal ☒	Abnormal ☐	1205
D.2.19	Nos. 5 and 7 Battery Pushing Emissions Baghouse Stack	Normal ☒	Abnormal ☐	1210
D.6.9	Sinter Plant Windbox Stack 1 (North)	Normal ☒	Abnormal ☐	0740
D.6.9	Sinter Plant Windbox Stack 2 (South)	Normal ☒	Abnormal ☐	0742
D.6.9	Sinter Plant Sinter Screening Station Baghouse Stack	Normal ☒	Abnormal ☐	0715
D.6.9	Sinter Plant Discharge Area Baghouse Stack 1	Normal ☒	Abnormal ☐	0653
D.6.9	Sinter Plant Discharge Area Baghouse Stack 3	Normal ☒	Abnormal ☐	0655
D.6.9	Sinter Plant Cooling Stack 1	Normal ☒	Abnormal ☐	0645
D.6.9	Sinter Plant Cooling Stack 3	Normal ☒	Abnormal ☐	0647
D.7.10	No. 14 Blast Furnace Casthouse Baghouse Stack	Normal ☒	Abnormal ☐	1128
D.7.10	Iron Beaching Facility	Normal ☒	Abnormal ☐	1038
D.8.11(a)	No. 1 BOP Gas Cleaning System Stack (North)	Normal ☒	Abnormal ☐	1026
D.8.11(a)	No. 1 BOP Gas Cleaning System Stack (South)	Normal ☒	Abnormal ☐	1028
D.8.11(a)	No. 1 BOP CASBell/OB Lancing Baghouse Stack	Normal ☒	Abnormal ☐	0924
D.9.13(a)	No. 2 QBOP Gas Cleaning System Stack (East)	Normal ☒	Abnormal ☐	1020
D.9.13(a)	No. 2 QBOP Gas Cleaning System Stack (West)	Normal ☒	Abnormal ☐	1022
D.9.13(a)	No. 2 QBOP Hot Metal Desulfurization Baghouse Stack	Normal ☒	Abnormal ☐	1145
D.9.13(a)	No. 2 QBOP Secondary Emissions Baghouse Stack	Normal ☒	Abnormal ☐	1150
D.14.8	No. 4 Boiler House No. 1 Boiler Stack	Normal ☒	Abnormal ☐	1125
D.14.8	No. 4 Boiler House No. 2 Boiler Stack	Normal ☒	Abnormal ☐	1127
D.15.13	Turbo Blower Boiler House Boiler No. 1 Stack	Normal ☒	Abnormal ☐	1058
D.15.13	Turbo Blower Boiler House Boiler No. 2 Stack	Normal ☒	Abnormal ☐	1100
D.15.13	Turbo Blower Boiler House Boiler No. 3 Stack	Normal ☒	Abnormal ☐	1102
D.15.13	Turbo Blower Boiler House Boiler No. 5 Stack	Normal ☒	Abnormal ☐	1104

If the facility is not operating, put the time and SD (for source down) in the Time column.

OCS Environmental, Inc.

Cast 202

U.S. Steel Gary Works
Emissions Inspection Summary

Date: 11/21/07

Start Time: 07:19 AM / PM

End Time: 09:04 AM / PM

No. 2 Precarbon ESP

BOP	Roof Monitor		Gas Cleaners	
QBOP	Roof Monitor		Gas Cleaners	
Blast Furnace	4	6	8	14
Blast Furnace Top	4	6	8	14

The following events or operations contributed to significant emissions:

Time	Heat/Cast Number	Operation	Comments

20071107 Inspection Summary.doc

OCS Environmental, Inc.
Method 9 VE Inspection Form

Date: 11-21-07
Source: #4 BFC.
Observation Start Time: 07:19
Observation End Time: 07:59
Observer's Position: SW OF STOP SIGN
Distance to source: 200 Feet
Direction to source: NE

Height of source: 63'
Vertical angle to source:

	Start	End
Emissions color:	ASNOTED	SAME
Background:	SKY	
Sky Conditions:	OVERCAST	
Wind Speed:	12 MPH	
Wind Direction:	NE	
Ambient Temp:	44°	
Relative Humidity%:	99 %	
Wet Bulb Temp:	N/A	

Plume Type: Attached Detached None

Comments	0	15	30	45			0	15	30	45	Comments
					0	30	0	0	0	0	
					1	31	0	0	0	0	
					2	32	0	0	0	0	
					3	33	0	0	0	0	
					4	34	0	0	0	0	
					5	35	0	0	0	0	
					6	36	0	0	0	0	
					7	37	0	0	0	0	
					8	38	0	0	0	0	
					9	39	0	0	0	0	
					10	40	0	0	0	0	
					11	41	0	0	0	0	
					12	42	0	0	0	0	
					13	43	0	0	0	0	
					14	44	0	0	0	0	
					15	45	0	0	0	0	
					16	46	0	0	0	0	
					17	47	0	0	0	0	
					18	48	0	0	0	0	
PRILUP #202	0	0	0	0	19	49	0	0	0	0	
	0	0	0	0	20	50	0	0	0	0	
	0	0	0	0	21	51	0	0	0	0	
	0	0	0	0	22	52	0	0	0	0	
	0	0	0	0	23	53	0	0	0	0	
	0	0	0	0	24	54	5	5	5	0	LT GRAY
	0	0	0	0	25	55	0	0	0	0	
	0	0	0	0	26	56	0	0	0	0	
	0	0	0	0	27	57	0	0	0	0	
	0	0	0	0	28	58	0	5	0	0	
	0	0	0	0	29	59	0	0	0	0	

Additional info (include steam dissipation point)

Observer's Signature

OCS Environmental, Inc.
Method 9 VE Inspection Form

Date: 11-21-07
Source: H4 BFC
Observation Start Time: 0800
Observation End Time: 0859
Observer's Position: SW of STOPSKY
Distance to source: 200'
Direction to source: NE

Height of source: 63'
Vertical angle to source:

	Start	End
Emissions color:	AS NOTED	SAME
Background:	SKY	↓
Sky Conditions:	OVERCAST	↓
Wind Speed:	12 MPH	↓
Wind Direction:	NE	↓
Ambient Temp:	44°	↓
Relative Humidity%:	99%	↓
Wet Bulb Temp:		

Plume Type: Attached Detached None

Comments	0	15	30	45			0	15	30	45	Comments
BROWN	15	15	15	10	0	30	0	0	5	0	
"	10	15	15	5	1	31	0	0	10	10	LT BRN
"	5	0	5	10	2	32	10	0	0	0	
"	10	5	0	0	3	33	0	0	0	0	
"	0	0	0	0	4	34	0	0	0	0	
	0	0	0	0	5	35	0	5	0	0	
	0	0	0	0	6	36	0	0	10	10	LT BRN
	0	0	0	0	7	37	5	0	0	0	"
	0	0	10	10	8	38	10	10	0	5	"
	10	10	10	15	9	39	0	0	0	0	
BROWN	10	5	10	10	10	40	0	0	10	10	
	10	5	5	5	11	41	5	0	0	20	BROWN
	5	0	0	0	12	42	20	20	25	25	"
	0	0	0	0	13	43	25	15	15	15	"
	0	0	0	0	14	44	15	15	15	15	"
	0	0	0	0	15	45	15	15	10	10	"
	0	0	0	0	16	46	10	10	15	15	"
	0	0	0	0	17	47	5	15	15	15	"
	0	0	0	0	18	48	25	25	25	25	"
	0	0	0	0	19	49	15	15	15	10	"
	0	0	10	5	20	50	15	15	15	5	"
	0	0	0	5	21	51	0	0	0	10	"
LT BRN	5	5	0	0	22	52	15	15	0	10	"
	0	0	0	0	23	53	5	0	0	0	
	0	0	0	0	24	54	0	0	0	0	
	0	0	0	10	25	55	0	0	0	0	
	0	0	0	0	26	56	0	0	0	0	
	0	0	0	0	27	57	10	10	10	0	
	0	0	0	0	28	58	0	0	0	0	
	0	0	0	0	29	59	0	0	0	0	

Additional info (include steam dissipation point)

Observer's Signature

OCS Environmental, Inc.
Method 9 VE Inspection Form

Date: 11-21-07
Source: #4 BFC
Observation Start Time: 09:00
Observation End Time: 09:04
Observer's Position: SWOFSTOPSIGN
Distance to source: 200 FT
Direction to source: NE

Height of source: 63'
Vertical angle to source:

	Start	End
Emissions color:	AS NOTED	SAME
Background:	SKY	SKY
Sky Conditions:	OVERCAST	OVERCAST
Wind Speed:	14	14
Wind Direction:	NE	NE
Ambient Temp:	48°	48°
Relative Humidity%:	87%	87%
Wet Bulb Temp:		

Plume Type: Attached Detached None

Comments	0	15	30	45			0	15	30	45	Comments
	0	0	0	10	0	30					
	0	0	0	0	1	31					
	0	0	0	0	2	32					
	0	0	0	0	3	33					
END CAST	0	0	0	0	4	34					
					5	35					
					6	36					
					7	37					
					8	38					
					9	39					
					10	40					
					11	41					
					12	42					
					13	43					
					14	44					
					15	45					
					16	46					
					17	47					
					18	48					
					19	49					
					20	50					
					21	51					
					22	52					
					23	53					
					24	54					
					25	55					
					26	56					
					27	57					
					28	58					
					29	59					

Additional info (include steam dissipation point)

Observer's Signature

[signature]

20071107 Method 9 Inspection Form.doc

OCS Environmental, Inc.
Method 9 Source Layout Sketch

Cast A 202

Date: 11/21/07

Observer Name: Chet Dulin

Begin Time: 07:19

Time End: 09:04

No Sun Visible Times
07:30
08:00
08:30
09:00

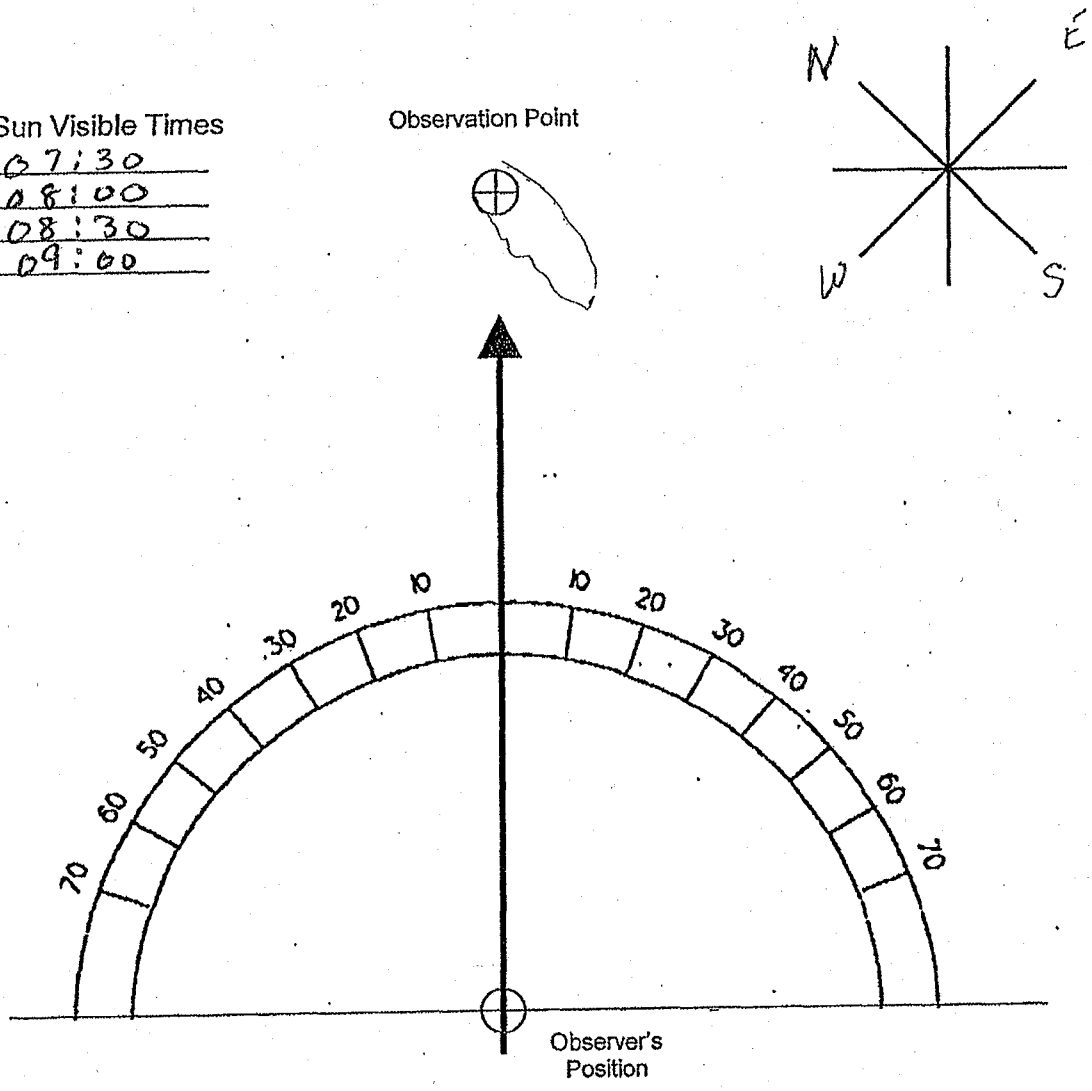

Signature: Chet Dulin

20071107 Method 9 Source Layout Sketch.doc

Cost 203

OCS Environmental, Inc.

U.S. Steel Gary Works
Emissions Inspection Summary

Date: 11/21/07

Start Time: 09:40 AM / PM

End Time: 12:19 AM / PM

No. 2 Precarbon ESP

BOP	Roof Monitor		Gas Cleaners	
QBOP	Roof Monitor		Gas Cleaners	
Blast Furnace	4	6	8	14
Blast Furnace Top	4	6	8	14

The following events or operations contributed to significant emissions:

Time	Heat/Cast Number	Operation	Comments

20071107 Inspection Summary.doc

OCS Environmental, Inc.
Method 9 Source Layout Sketch

Coal #203

Date: 11/21/07

Observer Name: Chet Dulin

Begin Time: 09:40

Time End: 12:19

No Sun Visible Times
09:40
10:00
10:30
11:00
11:30
12:00

Observation Point

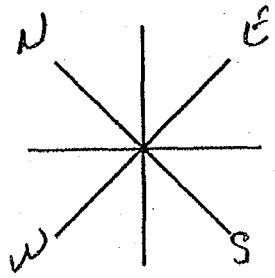

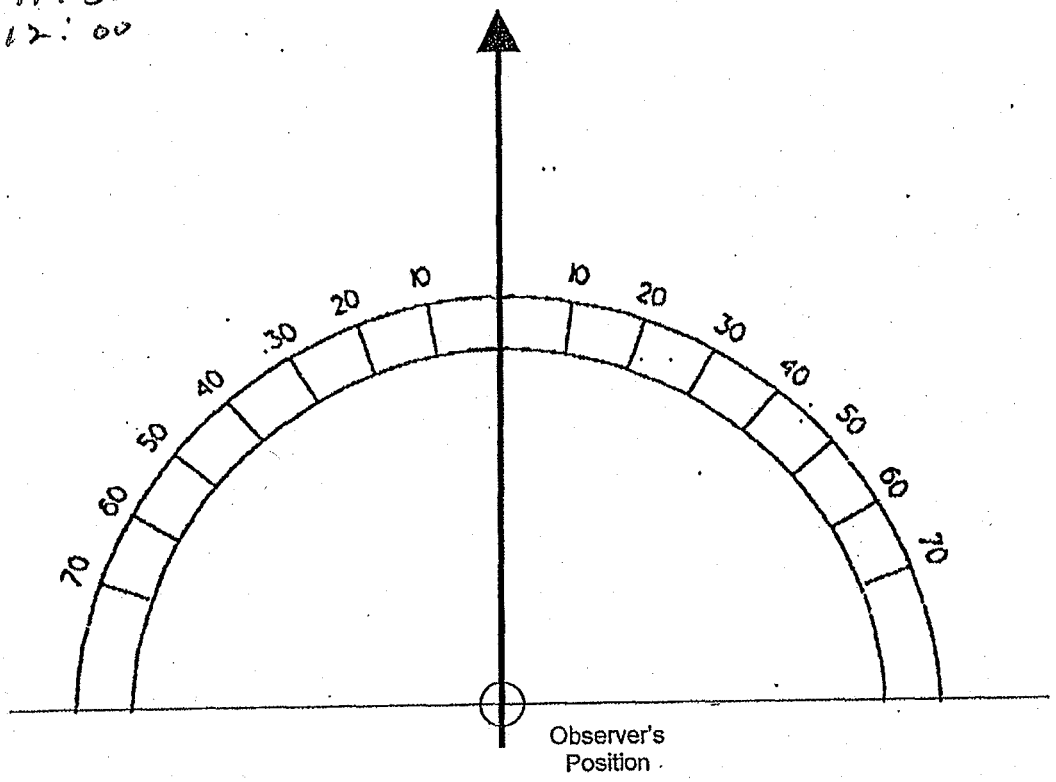

Signature: Chet Dulin

20071107 Method 9 Source Layout Sketch.doc

OCS Environmental, Inc.
Method 9 VE Inspection Form

Page 1 of ____

			Start	End
Date:	11-21-07	Emissions color:	AS NOTED	SAME
Source:	#4 BOE	Background:	SKY	
Observation Start Time:	09:40	Sky Conditions:	OVERCAST	
Observation End Time:	09:59	Wind Speed:	14	
Observer's Position:	SW OF STOP SIGN	Wind Direction:	NE	
Distance to source:	200'	Ambient Temp:	48°	
Direction to source:	NE	Relative Humidity%:	87%	
		Wet Bulb Temp:		
Height of source:	63'			
Vertical angle to source:				

Plume Type: Attached Detached None

Comments	0	15	30	45			0	15	30	45	Comments
					0	30					
					1	31					
					2	32					
					3	33					
					4	34					
					5	35					
					6	36					
					7	37					
					8	38					
					9	39					
					10	40	0	0	0	0	
					11	41	0	0	0	0	
					12	42	0	0	0	0	
					13	43	0	0	0	0	
					14	44	0	0	0	0	
					15	45	0	0	0	0	
					16	46	0	0	0	0	
					17	47	0	0	0	0	
					18	48	0	0	0	0	
					19	49	0	0	0	0	
					20	50	0	0	0	0	
					21	51	0	0	0	0	
					22	52	0	0	0	0	
					23	53	0	0	0	0	
					24	54	0	0	0	0	
					25	55	0	0	0	0	
					26	56	0	0	0	0	
					27	57	0	0	0	0	
					28	58	0	0	0	0	
					29	59	0	0	0	0	

Additional info (include steam dissipation point)

Observer's Signature

Chit Dubi

20071107 Method 9 Inspection Form.doc

888-2166

OCS Environmental, Inc.
Method 9 VE Inspection Form

Page 2 of ____

Date: 11-21-07
Source: #4 BFC
Observation Start Time: 10:00
Observation End Time: 10:59
Observer's Position: SW OF STOPSIGO
Distance to source: 200'
Direction to source: NE

Height of source: 63'
Vertical angle to source: —

	Start	End
Emissions color:	AS NOTED	SAME
Background:	SKY	↓
Sky Conditions:	OVERCAST	↓
Wind Speed:	14	↓
Wind Direction:	NE	↓
Ambient Temp:	48°	↓
Relative Humidity%:	87%	↓
Wet Bulb Temp:		

Plume Type: (Attached) Detached None

Comments	0	15	30	45			0	15	30	45	Comments
	0	0	0	0	0	30	0	0	10	5	
	0	0	0	0	1	31	0	0	0	0	
	0	0	0	0	2	32	0	10	10	10	
	0	0	0	0	3	33	5	5	20	10	
	0	0	0	0	4	34	20	20	20	10	BRN
	0	0	0	0	5	35	10	10	10	5	
	0	0	0	0	6	36	0	0	0	10	
	0	0	0	0	7	37	10	10	10	10	
	0	0	0	0	8	38	15	5	0	0	
	0	0	0	0	9	39	0	0	0	0	
	0	0	0	0	10	40	0	0	15	15	BRN
	0	0	0	0	11	41	0	0	0	0	
	0	0	0	15	12	42	0	0	15	25	BRN
BRN	20	20	20	20	13	43	25	15	10	20	"
	10	5	0	0	14	44	15	15	10	5	"
	0	0	0	0	15	45	15	15	15	15	"
BRN	15	15	15	15	16	46	5	10	15	15	"
	10	0	0	0	17	47	5	5	5	10	"
	0	0	0	0	18	48	5	5	5	10	"
	0	0	0	0	19	49	15	10	10	10	"
	0	0	0	0	20	50	10	10	10	5	"
	0	0	0	0	21	51	5	10	15	10	"
	5	0	0	0	22	52	5	0	0	0	
	0	0	5	0	23	53	0	0	0	0	
	0	0	0	0	24	54	0	0	0	0	
	0	0	0	0	25	55	10	10	5	5	BRN
	0	0	0	0	26	56	5	5	5	0	
	10	0	10	5	27	57	0	0	0	0	
	0	0	0	0	28	58	0	0	0	0	
	0	0	0	0	29	59	0	0	0	0	

Additional Info (include steam dissipation point)

Observer's Signature: Chet Dube

20071107 Method 9 Inspection Form.doc

OCS Environmental, Inc.
Method 9 VE Inspection Form

Date: 11/21/07
Source: 4 BCE
Observation Start Time: 11:00
Observation End Time:
Observer's Position: SW of STOP SIGN
Distance to source: 200'
Direction to source: NE

Height of source: 63'
Vertical angle to source: —

	Start	End
Emissions color:	AS NOTED	SAME
Background:	SKY	
Sky Conditions:	OVERCAST	
Wind Speed:	14	
Wind Direction:	NE	
Ambient Temp:	48°	
Relative Humidity%:	87%	
Wet Bulb Temp:	—	

Plume Type: Attached Detached None

Comments	0	15	30	45			0	15	30	45	Comments
	0	0	0	0	0	30	0	0	0	0	
	0	0	0	0	1	31	0	0	0	0	
	0	0	0	0	2	32	5	5	5	5	BRN
	0	0	0	0	3	33	5	5	5	5	"
	0	0	0	0	4	34	0	5	20	10	"
BRN	0	0	10	0	5	35	10	5	0	0	"
	0	0	0	0	6	36	0	0	0	0	
	0	0	0	0	7	37	0	0	0	0	
BRN.	0	5	5	0	8	38	0	0	0	0	
	0	0	10	5	9	39	0	5	5	5	BRN
	5	5	5	5	10	40	0	0	0	0	
	0	0	0	0	11	41	0	0	0	0	
	0	10	10	0	12	42	0	5	0	0	
	0	0	0	0	13	43	0	0	0	0	
	0	0	0	0	14	44	10	10	5	5	BRN
BRN	0	0	5	5	15	45	5	5	5	5	"
	0	5	5	0	16	46	5	5	5	5	"
	0	0	0	0	17	47	5	5	0	0	
BRN	5	5	0	0	18	48	0	0	0	10	BRN
"	5	5	5	5	19	49	10	10	20	20	"
	0	0	0	0	20	50	20	20	20	20	"
	0	0	0	0	21	51	20	20	5	5	"
	0	0	0	0	22	52	5	5	5	5	"
	0	0	0	0	23	53	5	5	5	10	"
	0	0	0	10	24	54	10	10	5	5	"
BRN	10	10	0	0	25	55	5	5	0	0	
"	5	5	0	5	26	56	0	0	0	0	
"	0	10	10	0	27	57	0	0	0	0	
	0	0	0	0	28	58	0	0	0	0	
BRN	10	5	5	5	29	59	0	0	0	0	

Additional info (include steam dissipation point)

Observer's Signature

OCS Environmental, Inc.
Method 9 VE Inspection Form

Date: 11-21-07
Source: #4 BFC
Observation Start Time: 12:00
Observation End Time: 12:19
Observer's Position: SW OF STOP SIGN
Distance to source: 200'
Direction to source: NE

Height of source: 63'
Vertical angle to source:

	Start	End
Emissions color:	AS NOTED	SAME
Background:	SKY	↓
Sky Conditions:	OVERCAST	↓
Wind Speed:	1-4 MPH	↓
Wind Direction:	NE	↓
Ambient Temp:	48°	↓
Relative Humidity%:	87%	
Wet Bulb Temp:	N/A.	

Plume Type: Attached Detached None

Comments	0	15	30	45			0	15	30	45	Comments
	0	0	0	0	0	30					
	0	0	0	0	1	31					
	0	0	0	0	2	32					
	0	0	0	0	3	33					
	0	0	0	0	4	34					
	0	0	0	0	5	35					
	0	0	0	0	6	36					
	0	0	0	0	7	37					
	0	0	0	0	8	38					
	0	0	0	0	9	39					
	0	0	0	0	10	40					
	0	0	0	0	11	41					
	0	0	0	0	12	42					
	0	0	0	0	13	43					
	0	0	0	0	14	44					
	0	0	0	0	15	45					
	0	0	0	0	16	46					
	0	0	0	0	17	47					
	0	0	0	0	18	48					
END CAST	0	0	0	0	19	49					
					20	50					
					21	51					
					22	52					
					23	53					
					24	54					
					25	55					
					26	56					
					27	57					
					28	58					
					29	59					

Additional info (include steam dissipation point)

Observer's Signature

20071107 Method 9 Inspection Form.doc

2-4

OCS Environmental, Inc.

U.S. Steel Gary Works
Emissions Inspection Summary

Date: 11/29/07

Start Time: 0930 (AM) / PM

End Time: 1130 (AM) / PM

No. 2 Precarbon ESP

BOP	Roof Monitor		Gas Cleaners	
QBOP	Roof Monitor		Gas Cleaners	
Blast Furnace	(4)	6	8	14
Blast Furnace Top	4	6	8	14

The following events or operations contributed to significant emissions:

Time	Heat/Cast Number	Operation	Comments
	NO EXCESSIVE EMISSION		

20071107 Inspection Summary.doc

OCS Environmental, Inc.
Method 9 VE Inspection Form

			Start	End
Date:	11/29/07			
Source:	#4 Blast Furnace	Emissions color:	Brown	
Observation Start Time:	0930	Background:	Sky	Same
Observation End Time:	1130	Sky Conditions:	Clear	↓
Observer's Position:	4BF1	Wind Speed:	15 MPH	↓
Distance to source:	320 yrds.	Wind Direction:	NW	↓
Direction to source:	NW 320°	Ambient Temp:	19°	↓
		Relative Humidity%:	65°	↓
Height of source:	63'	Wet Bulb Temp:		↓
Vertical angle to source:	5°			

Plume Type: (Attached) Detached None

Comments	0	15	30	45			0	15	30	45	Comments
					0	30	0	0	0	0	Cast in Progress
					1	31	0	0	0	0	# 283
					2	32	0	0	0	0	
					3	33	0	0	0	0	
					4	34	0	0	0	0	
					5	35	0	5	5	0	
					6	36	5	10	5	0	
					7	37	0	5	0	0	
					8	38	0	10	5	5	
					9	39	0	0	5	5	
					10	40	0	0	5	0	
					11	41	0	0	0	5	
					12	42	5	5	0	5	
					13	43	0	5	5	5	
					14	44	5	0	0	0	
					15	45	0	0	0	0	
					16	46	0	0	0	0	
					17	47	0	0	0	0	
					18	48	0	0	0	0	
					19	49	0	0	0	5	
					20	50	5	0	0	0	
					21	51	0	0	0	0	
					22	52	0	0	0	0	
					23	53	0	0	0	0	
					24	54	0	0	0	0	
					25	55	0	0	0	0	
					26	56	0	0	0	0	
					27	57	0	0	0	0	
					28	58	0	0	0	0	
					29	59	0	5	5	0	

Additional info (include steam dissipation point)

Observer's Signature: A. Richardson

20071107 Method 9 Inspection Form.doc

OCS Environmental, Inc.
Method 9 VE Inspection Form

			Start	End
Date:	11/29/07			
Source:	# 4 Blast Furn	Emissions color:	BROWN	
Observation Start Time:	0930	Background:	SKY	SAME
Observation End Time:	1130	Sky Conditions:	CLEAR	
Observer's Position:	4BFI	Wind Speed:	15 MPH	
Distance to source:	320 YARDS	Wind Direction:	NW	
Direction to source:	NW 320°	Ambient Temp:	19°	
		Relative Humidity%:	65%	
Height of source:	63 Ft.	Wet Bulb Temp:		
Vertical angle to source:	5°			

Plume Type: (Attached) Detached None

Comments	0	15	30	45			0	15	30	45	Comments
	0	0	0	0	0	30	0	0	0	0	
	0	0	0	0	1	31	0	0	0	0	
	0	0	0	0	2	32	0	0	0	0	
	0	0	0	0	3	33	0	0	0	0	
	0	0	0	0	4	34	0	0	0	0	
	0	0	0	0	5	35	0	0	0	0	
	0	0	0	0	6	36	0	0	0	0	
	0	0	0	0	7	37	0	0	0	0	*
	0	0	0	0	8	38	0	0	0	0	
	0	5	5	0	9	39	0	0	0	0	PLUGGED HOLE
	0	0	0	5	10	40	0	0	0	0	
	5	0	0	0	11	41	0	0	0	0	
	0	0	0	0	12	42	0	0	0	0	
	0	0	0	0	13	43	0	0	0	10	
	0	0	0	0	14	44	10	10	10	20	
	0	0	0	0	15	45	10	10	15	15	
	0	0	0	0	16	46	5	5	5	5	
	0	0	0	0	17	47	5	5	5	5	
	0	0	0	0	18	48	0	0	0	0	
	0	0	0	0	19	49	0	0	0	0	
	0	0	0	0	20	50	0	0	0	0	
	0	0	0	0	21	51	0	0	0	0	
	0	0	0	0	22	52	0	0	0	0	
	0	0	0	0	23	53	0	0	0	0	
	0	0	0	0	24	54	0	0	0	0	
	0	0	0	0	25	55	0	0	0	0	
	0	0	0	0	26	56	0	0	0	0	
	0	0	0	0	27	57	0	0	0	0	
	0	0	0	0	28	58	0	0	0	0	
	0	0	0	0	29	59	0	0	0	0	

Additional info (include steam dissipation point)

Observer's Signature: Alex Richardson

20071107 Method 9 Inspection Form.doc

OCS Environmental, Inc.
Method 9 VE Inspection Form

			Start	End
Date:	11/29/07	Emissions color:		
Source:	#4 Blast Furnace	Background:	SKY	SAME
Observation Start Time:	0930	Sky Conditions:	CLEAR	
Observation End Time:	1130	Wind Speed:	15 MPH	
Observer's Position:	4BF1	Wind Direction:	NW	
Distance to source:	320 YRD.	Ambient Temp:	19°	
Direction to source:	NW 320°	Relative Humidity%:	65%	
Height of source:	63 FT.	Wet Bulb Temp:		
Vertical angle to source:	5°			

Plume Type: Attached Detached None

Comments	0	15	30	45			0	15	30	45	Comments
	0	0	0	0	0	30					
	0	0	0	0	1	31					
	0	0	0	0	2	32					
	0	0	0	0	3	33					
	0	0	0	0	4	34					
	0	0	0	0	5	35					
	0	0	0	0	6	36					
	0	0	0	0	7	37					
	0	0	0	0	8	38					
	0	0	0	0	9	39					
	0	0	0	0	10	40					
	0	0	0	0	11	41					
	0	0	0	0	12	42					
	0	0	0	0	13	43					
	0	0	0	0	14	44					
	0	0	0	0	15	45					
# 284 CAST IN:16	5	10	10	10	16	46					
	5	0	0	0	17	47					
	0	0	0	0	18	48					
	0	0	0	0	19	49					
	0	0	0	0	20	50					
	0	0	0	0	21	51					
	0	0	0	0	22	52					
	0	0	0	0	23	53					
	0	0	0	5	24	54					
	5	0	0	0	25	55					
	0	5	5	0	26	56					
	0	0	0	0	27	57					
	0	0	0	0	28	58					
	0	0	0	0	29	59					

Additional info (include steam dissipation point)

Observer's Signature: Alex Richardson

OCS Environmental, Inc.
Method 9 Source Layout Sketch

Date: 11/29/07

Observer Name: ALEX RICHARDSON

Begin Time: 0930 Time End: _____

No Sun Visible Times

_____
_____
_____
_____

Observation Point

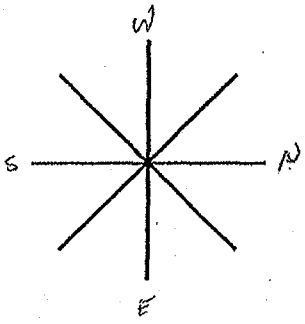

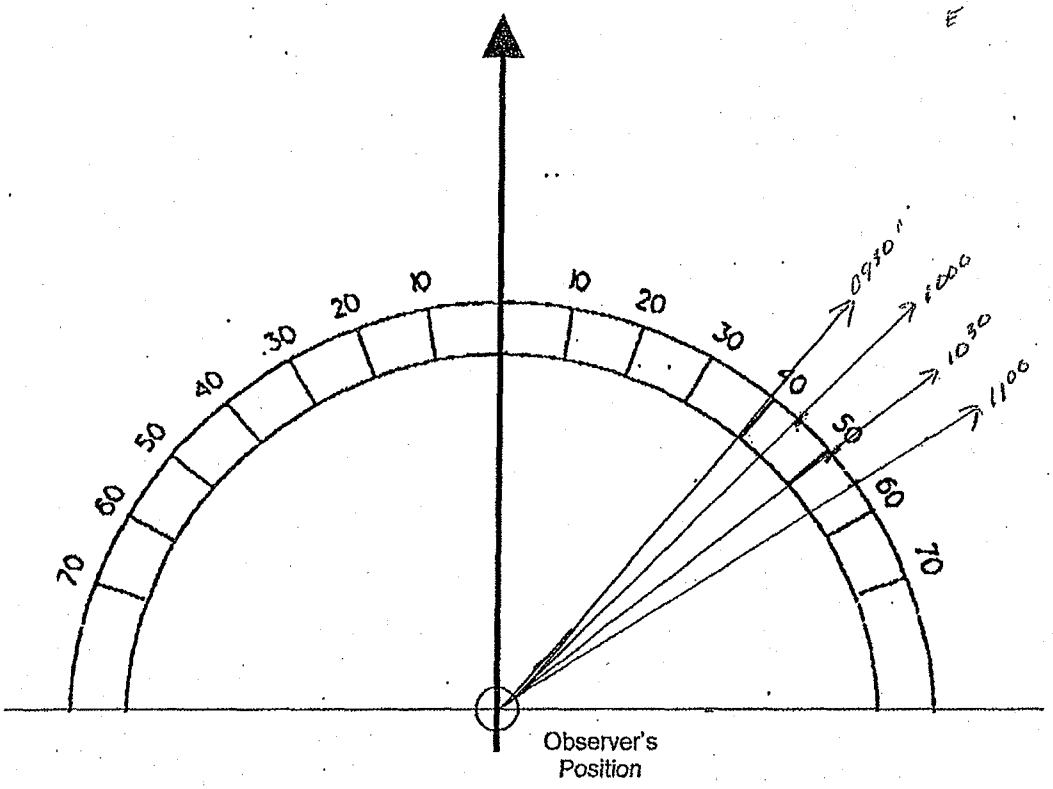

Signature: Alex Richardson

20071107 Method 9 Source Layout Sketch.doc

2-5

OCS Environmental, Inc.

U.S. Steel Gary Works
Emissions Inspection Summary

Date: 12/05/2007

Start Time: 0900 AM / PM

End Time: 1100 AM / PM

No. 2 Precarbon ESP

BOP	Roof Monitor		Gas Cleaners	
QBOP	Roof Monitor		Gas Cleaners	
Blast Furnace	4	6	8	14
Blast Furnace Top	4	6	8	14

The following events or operations contributed to significant emissions:

Time	Heat/Cast Number	Operation	Comments

Jon Simpson

20071107 Inspection Summary.doc

OCS Environmental, Inc.
Method 9 VE Inspection Form

Page 1 of 2

			Start	End
Date:	12/05/07	Emissions color:	As Noted	SAME
Source:	4 Blast Furnace	Background:	Sky	
Observation Start Time:	0900	Sky Conditions:	Overcast	
Observation End Time:	0959	Wind Speed:	10	
Observer's Position:	4 BF 5	Wind Direction:	NE	
Distance to source:	92 yards	Ambient Temp:	30°	
Direction to source:	NW	Relative Humidity%:	90%	
Height of source:	53'	Wet Bulb Temp:	—	—
Vertical angle to source:	9°			

Plume Type: Attached Detached None

Comments	0	15	30	45			0	15	30	45	Comments
	0	0	0	0	0	30	0	0	0	0	
	0	0	0	0	1	31	0	0	0	0	
	0	0	0	0	2	32	0	0	0	0	
	0	0	0	0	3	33	0	0	0	0	
	0	0	0	0	4	34	0	0	0	0	
	0	0	0	0	5	35	0	0	0	0	
	0	0	0	0	6	36	0	0	0	0	
	0	0	0	0	7	37	0	0	0	0	
	0	0	0	0	8	38	0	0	0	0	
	0	0	0	0	9	39	0	0	0	0	
	0	0	0	0	10	40	0	0	0	0	
	0	0	0	0	11	41	0	0	0	0	
	0	0	0	0	12	42	0	0	0	0	
	0	0	0	0	13	43	0	0	0	0	
	0	0	0	0	14	44	0	0	0	0	
	0	0	0	0	15	45	0	0	0	0	
	0	0	0	0	16	46	0	0	0	0	
	0	0	0	0	17	47	0	0	0	0	
	0	0	0	0	18	48	0	0	0	0	
	0	0	0	0	19	49	0	0	0	0	
	0	0	0	0	20	50	0	0	0	0	
	0	0	0	0	21	51	0	0	0	0	
	0	0	0	0	22	52	0	0	0	0	
	0	0	0	0	23	53	0	0	0	0	
	0	0	0	0	24	54	0	0	0	0	
	0	0	0	0	25	55	0	0	0	0	
	0	0	0	0	26	56	0	0	0	0	
	0	0	0	0	27	57	0	0	0	0	
	0	0	0	0	28	58	0	0	0	0	
	0	0	0	0	29	59	0	0	0	0	

Additional info (include steam dissipation point)

Observer's Signature: Jon Simpson

20071107 Method 9 Inspection Form.doc

OCS Environmental, Inc.
Method 9 VE Inspection Form

Page 2 of 2

			Start	End
Date:	12/05/07			
Source:	4 Black Furnace	Emissions color:	As Noted	SAME
Observation Start Time:	1000	Background:	Sky	
Observation End Time:	1059 45	Sky Conditions:	Over Cast	
Observer's Position:	4 BF 5	Wind Speed:	10	
Distance to source:	92 yds	Wind Direction:	NE	
Direction to source:	NW	Ambient Temp:	30°	
		Relative Humidity%:	90%	
Height of source:	63'	Wet Bulb Temp:	—	—
Vertical angle to source:	9°			

Plume Type: Attached Detached None

Comments	0	15	30	45			0	15	30	45	Comments
	0	0	0	0	0	30	0	0	0	0	
	0	0	0	0	1	31	0	0	0	0	
	0	0	0	0	2	32	0	0	0		
	0	0	0	0	3	33	0	0	0	0	
	0	0	0	0	4	34	0	0	0	0	
	0		0	0	5	35	0	0	0	0	
	0	0	0	0	6	36	0	0	0	0	
	0	0	0	0	7	37	0	0	0	0	
	0	0	0	0	8	38	0	0	0	0	
	0	0	0	0	9	39	0	0	0	0	
	0	0	0	0	10	40	0	0	0	0	
	0	0	0	0	11	41	0	0	0	0	
	0	0	0	0	12	42	0	0	0	0	
	0	0	0	0	13	43	0	0	0	0	
	0	0	0	0	14	44	0	0	0	0	
	0	0	0	0	15	45	0	0	0	0	
	0	0	0	0	16	46	0	0	0	0	
	0	0	0	0	17	47	0	0	0	0	
	0	0	0	0	18	48	0	0	0	0	
	0	0	0	0	19	49	0	0	0	0	
	0	0	0	0	20	50	0	0	0	0	
	0	0	0	0	21	51	0	0	0	0	
	0	0	0	0	22	52	0	0	0	0	
	0	0	0	0	23	53	0	0	0	0	
	0	0	0	0	24	54	0	0	0	0	
	0	0	0	0	25	55	0	0	0	0	
	0	0	0	0	26	56	0	0	0	0	
	0	0	0	0	27	57	0	0	0	0	
	0	0	0	0	28	58	0	0	0	0	
	0	0	0	0	29	59	0	0	0	0	

Additional info (include steam dissipation point)

Observer's Signature: Jon Simpson

20071107 Method 9 Inspection Form.doc

OCS Environmental, Inc.
Method 9 Source Layout Sketch

Date: 12/05/2007
Observer Name: Jon Simpson
Begin Time: 0900 Time End: 1100

No Sun Visible Times
0900, 0930, 1000
1030, 1100

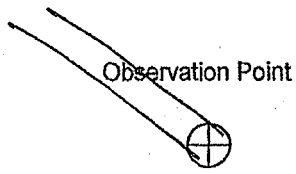

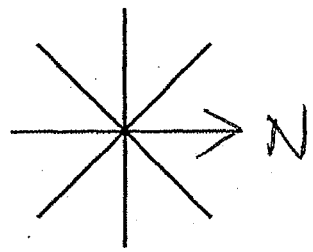

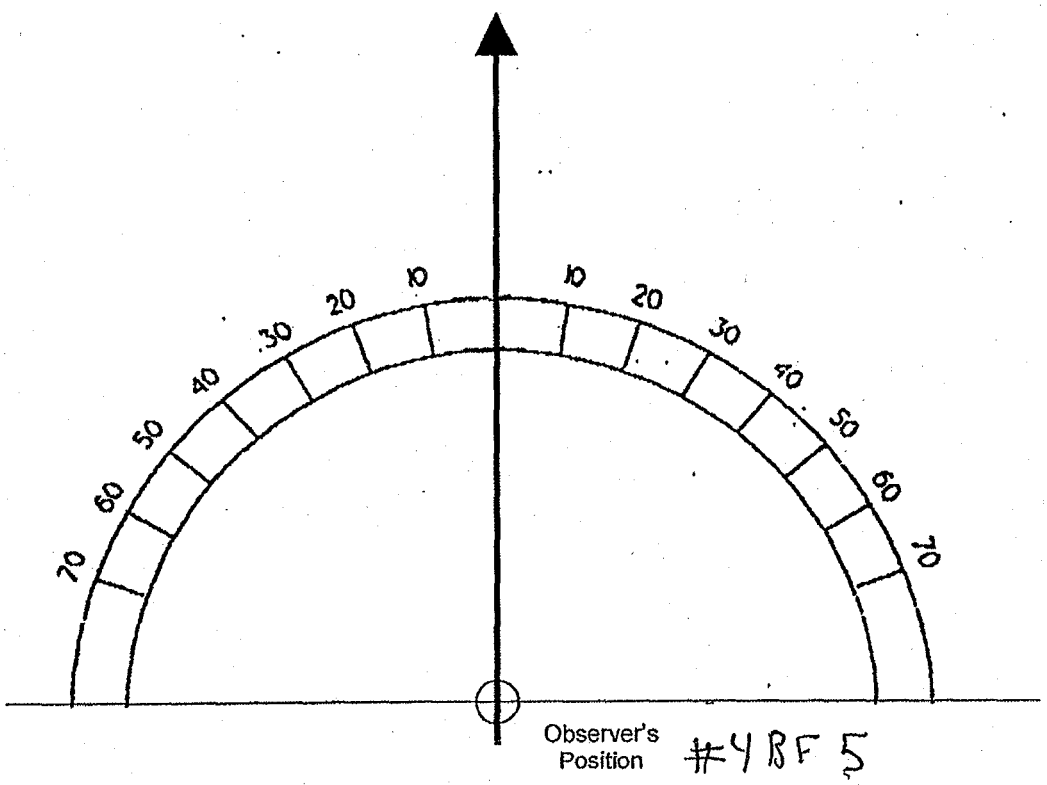

Signature: Jon Simpson

20071107 Method 9 Source Layout Sketch.doc

2-6

OCS Environmental, Inc.

U.S. Steel Gary Works
Emissions Inspection Summary

Date: 11/20/07

Start Time: 0700 (AM) / PM

End Time: 0900 (AM) / PM

No. 2 Precarbon ESP

BOP	Roof Monitor		Gas Cleaners	
QBOP	Roof Monitor		Gas Cleaners	
Blast Furnace	(4)	6	8	14
Blast Furnace Top	4	6	8	14

The following events or operations contributed to significant emissions:

Time	Heat/Cast Number	Operation	Comments
Lite	Emissions Observed: No Exceedences		

20071107 Inspection Summary.doc

OCS Environmental, Inc.
Method 9 VE Inspection Form

Page 1 of 2

			Start	End
Date:	11-20-07			
Source:	#4 BF Rose/Shell	Emissions color:	As Noted	Same
Observation Start Time:	0700	Background:	Sky	
Observation End Time:	0759	Sky Conditions:	Overcast	
Observer's Position:	4 of 1	Wind Speed:	3	
Distance to source:	320 yds	Wind Direction:	NE	
Direction to source:	NW 320° Mag North	Ambient Temp:	46°	
		Relative Humidity%:	100	
Height of source:	63'	Wet Bulb Temp:	—	
Vertical angle to source:	5°			

Plume Type: (Attached) Detached None

Comments	0	15	30	45			0	15	30	45	Comments
	0	0	0	0	0	30	0	0	0	0	
	0	0	0	0	1	31	0	0	0	0	
	0	0	0	0	2	32	0	0	0	0	
	0	0	0	0	3	33	0	0	0	0	
	0	0	0	0	4	34	0	0	0	0	
	0	0	0	0	5	35	0	0	0	0	
	0	0	0	0	6	36	0	0	0	0	
	0	0	0	0	7	37	0	0	0	0	
	0	0	0	0	8	38	0	0	0	0	
	0	0	0	0	9	39	0	0	0	0	
	0	0	0	0	10	40	0	0	0	0	
	0	0	0	0	11	41	0	0	0	0	
	0	0	0	0	12	42	0	0	0	0	
	0	0	0	0	13	43	0	0	0	0	
	0	0	0	0	14	44	0	0	0	0	
	0	0	0	0	15	45	0	0	0	0	
	0	0	0	0	16	46	0	0	0	0	
	0	0	0	0	17	47	0	0	0	0	
	0	0	0	0	18	48	0	0	0	0	
	0	0	0	0	19	49	0	0	0	0	
	0	0	0	0	20	50	0	0	0	0	
	0	0	0	0	21	51	0	0	0	0	
	0	0	0	0	22	52	0	0	0	0	
	0	0	0	0	23	53	0	0	0	0	
	0	0	0	0	24	54	0	0	0	0	
	0	0	0	0	25	55	0	0	0	0	
	0	0	0	0	26	56	0	0	0	0	
	0	0	0	0	27	57	0	0	0	0	
	0	0	0	0	28	58	0	0	0	0	
	0	0	0	0	29	59	0	0	0	0	

Additional info (include steam dissipation point)

Observer's Signature: Kevin Davis

20071107 Method 9 Inspection Form.doc

OCS Environmental, Inc.
Method 9 VE Inspection Form

			Start	End
Date:	11-20-07			
Source:	#4 BP Roof/Shell	Emissions color:	As Noted	Same
Observation Start Time:	0800	Background:	Sky	↓
Observation End Time:	0859	Sky Conditions:	Overcast	↓
Observer's Position:	4681	Wind Speed:	3	↓
Distance to source:	320 yds	Wind Direction:	NE	↓
Direction to source:	NW 320° Mag North	Ambient Temp:	46°	↓
		Relative Humidity%:	100	↓
Height of source:	63'	Wet Bulb Temp:	--	✓
Vertical angle to source:	5°			

Plume Type: (Attached) Detached None

Comments	0	15	30	45			0	15	30	45	Comments
	0	0	0	0	0	30	0	0	0	0	
	0	0	0	0	1	31	0	0	0	0	
	0	0	0	0	2	32	0	0	0	0	
	0	0	0	0	3	33	0	0	0	0	
	0	0	0	0	4	34	0	0	0	0	
	0	0	0	0	5	35	0	0	0	0	
	0	0	0	0	6	36	0	0	0	0	
	0	0	0	0	7	37	0	0	30	25	Brown (Shell)
	0	0	0	0	8	38	10	15	10	20	
	0	0	0	0	9	39	25	10	10	15	
	0	0	0	0	10	40	0	0	0	0	Start Cast #195
	0	0	0	0	11	41	0	0	0	0	
	0	0	0	0	12	42	0	0	0	0	
	0	0	0	0	13	43	0	0	0	0	
	0	0	0	0	14	44	0	0	0	0	
	0	0	0	0	15	45	0	0	0	0	
	0	0	0	0	16	46	0	0	0	0	
	0	0	0	0	17	47	0	0	0	0	
	0	0	0	0	18	48	0	0	0	0	
	0	0	0	0	19	49	0	0	0	0	
	0	0	0	0	20	50	0	0	0	0	
	0	0	0	0	21	51	0	0	0	0	
	0	0	0	0	22	52	0	0	0	0	
	0	0	0	0	23	53	0	0	0	0	
	0	0	0	0	24	54	0	0	0	0	
	0	0	0	0	25	55	0	0	0	0	
	0	0	0	0	26	56	0	0	0	0	
	0	0	0	0	27	57	0	0	0	0	
	0	0	0	0	28	58	0	0	0	0	
	0	0	0	0	29	59	0	0	0	0	

Additional info (include steam dissipation point)

Observer's Signature: Kevin Davis

OCS Environmental, Inc.
Method 9 Source Layout Sketch

Date: 11 / 20 / 07

Observer Name: K. Davis

Begin Time: 0700 Time End: 0900

No Sun Visible Times
0700
0730
0800
0830

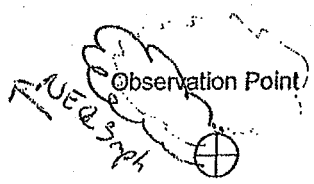

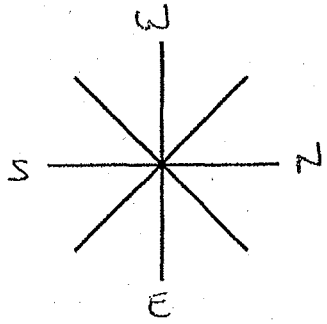

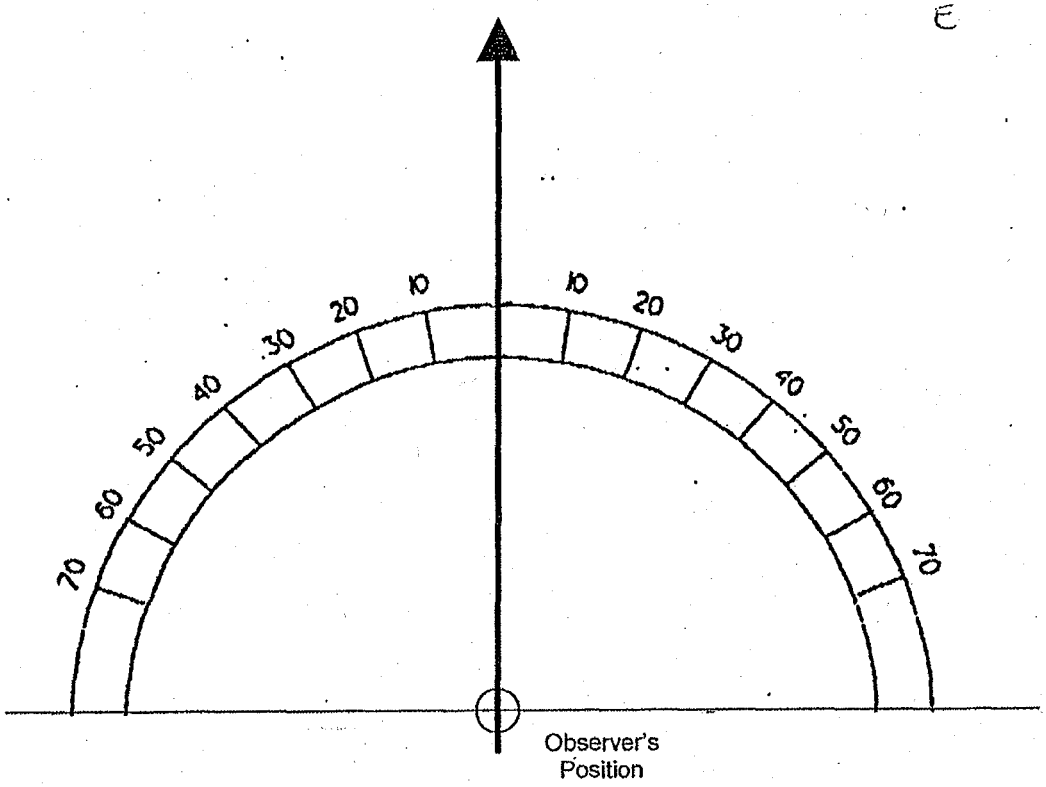

Signature: Kevin Davis

20071107 Method 9 Source Layout Sketch.doc

2-7

OCS Environmental, Inc.

U.S. Steel Gary Works
Emissions Inspection Summary

Date: 11 / 21 / 07

Start Time: 0700 (AM) / PM

End Time: 0900 (AM) / PM

No. 2 Precarbon ESP

BOP	Roof Monitor		Gas Cleaners	
QBOP	Roof Monitor		Gas Cleaners	
Blast Furnace	(4)	6	8	14
Blast Furnace Top	4	6	8	14

The following events or operations contributed to significant emissions:

Time	Heat/Cast Number	Operation	Comments
No	Emissions Observed		

20071107 Inspection Summary.doc

OCS Environmental, Inc.
Method 9 VE Inspection Form

Page 1 of 2

			Start	End
Date:	11-21-07			
Source:	#4BF Roof/shell	Emissions color:	As Noted	Same
Observation Start Time:	0700	Background:	Sky	
Observation End Time:	0759	Sky Conditions:	Overcast	
Observer's Position:	4BF1	Wind Speed:	12	
Distance to source:	320yds	Wind Direction:	NE	
Direction to source:	NW 320°	Ambient Temp:	44°	
	Mag North	Relative Humidity%:	99	
Height of source:	103'	Wet Bulb Temp:	—	
Vertical angle to source:	5°			

Plume Type: Attached Detached None

Comments	0	15	30	45			0	15	30	45	Comments
	0	0	0	0	0	30	0	0	0	0	
	0	0	0	0	1	31	0	0	0	0	
	0	0	0	0	2	32	0	0	0	0	
	0	0	0	0	3	33	0	0	0	0	
	0	0	0	0	4	34	0	0	0	0	
	0	0	0	0	5	35	0	0	0	0	
	0	0	0	0	6	36	0	0	0	0	
	0	0	0	0	7	37	0	0	0	0	
	0	0	0	0	8	38	0	0	0	0	
	0	0	0	0	9	39	0	0	0	0	
	0	0	0	0	10	40	0	0	0	0	
	0	0	0	0	11	41	0	0	0	0	
	0	0	0	0	12	42	0	0	0	0	
	0	0	0	0	13	43	0	0	0	0	
	0	0	0	0	14	44	0	0	0	0	
	0	0	0	0	15	45	0	0	0	0	
	0	0	0	0	16	46	0	0	0	0	
	0	0	0	0	17	47	0	0	0	0	
	0	0	0	0	18	48	0	0	0	0	
START CAST #202	0	0	0	0	19	49	0	0	0	0	
	0	0	0	0	20	50	0	0	0	0	
	0	0	0	0	21	51	0	0	0	0	
	0	0	0	0	22	52	0	0	0	0	
	0	0	0	0	23	53	0	0	0	0	
	0	0	0	0	24	54	0	0	0	0	
	0	0	0	0	25	55	0	0	0	0	
	0	0	0	0	26	56	0	0	0	0	
	0	0	0	0	27	57	0	0	0	0	
	0	0	0	0	28	58	0	0	0	0	
	0	0	0	0	29	59	0	0	0	0	

Additional info (include steam dissipation point)

Observer's Signature: Kevin Davis

20071107 Method 9 Inspection Form.doc

OCS Environmental, Inc.
Method 9 VE Inspection Form

			Start	End
Date:	11-21-07			
Source:	#4BF. Ruff/Shell	Emissions color:	As Noted	Same
Observation Start Time:	0800	Background:	Sky	
Observation End Time:	0859	Sky Conditions:	Overcast	
Observer's Position:	4BF1	Wind Speed:	12	
Distance to source:	320yds	Wind Direction:	NE	
Direction to source:	NW 320° Mag North	Ambient Temp:	44°	
		Relative Humidity%:	99	
Height of source:	63'	Wet Bulb Temp:	–	
Vertical angle to source:	5°			

Plume Type: (Attached) Detached None

Comments	0	15	30	45			0	15	30	45	Comments
	0	0	0	0	0	30	0	0	0	0	
	0	0	0	0	1	31	0	0	0	0	
	0	0	0	0	2	32	0	0	0	0	
	0	0	0	0	3	33	0	0	0	0	
	0	0	0	0	4	34	0	0	0	0	
	0	0	0	0	5	35	0	0	0	0	
	0	0	0	0	6	36	0	0	0	0	
	0	0	0	0	7	37	0	0	0	0	
	0	0	0	0	8	38	0	0	0	0	
	0	0	0	0	9	39	0	0	0	0	
	0	0	0	0	10	40	0	0	0	0	
	0	0	0	0	11	41	0	0	0	0	
	0	0	0	0	12	42	0	0	0	0	
	0	0	0	0	13	43	0	0	0	0	
	0	0	0	0	14	44	0	0	0	0	
	0	0	0	0	15	45	0	0	0	0	
	0	0	0	0	16	46	0	0	0	0	
	0	0	0	0	17	47	0	0	0	0	
	0	0	0	0	18	48	0	0	0	0	
	0	0	0	0	19	49	0	0	0	0	
	0	0	0	0	20	50	0	0	0	0	
	0	0	0	0	21	51	0	0	0	0	
	0	0	0	0	22	52	0	0	0	0	
	0	0	0	0	23	53	0	0	0	0	
	0	0	0	0	24	54	0	0	0	0	
	0	0	0	0	25	55	0	0	0	0	
	0	0	0	0	26	56	0	0	0	0	
	0	0	0	0	27	57	0	0	0	0	
	0	0	0	0	28	58	0	0	0	0	
	0	0	0	0	29	59	0	0	0	0	

Additional info (include steam dissipation point)

Observer's Signature: Kevin Davis

20071107 Method 9 Inspection Form.doc

OCS Environmental, Inc.
Method 9 Source Layout Sketch

Date: 11 / 21 / 07

Observer Name: K. Davis

Begin Time: 0700 Time End: 0900

No Sun Visible Times
0700
0730
0800
0830

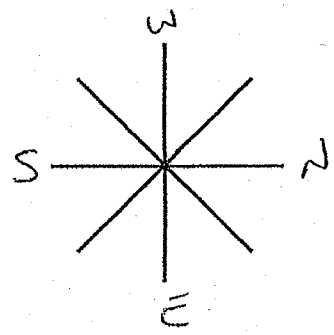

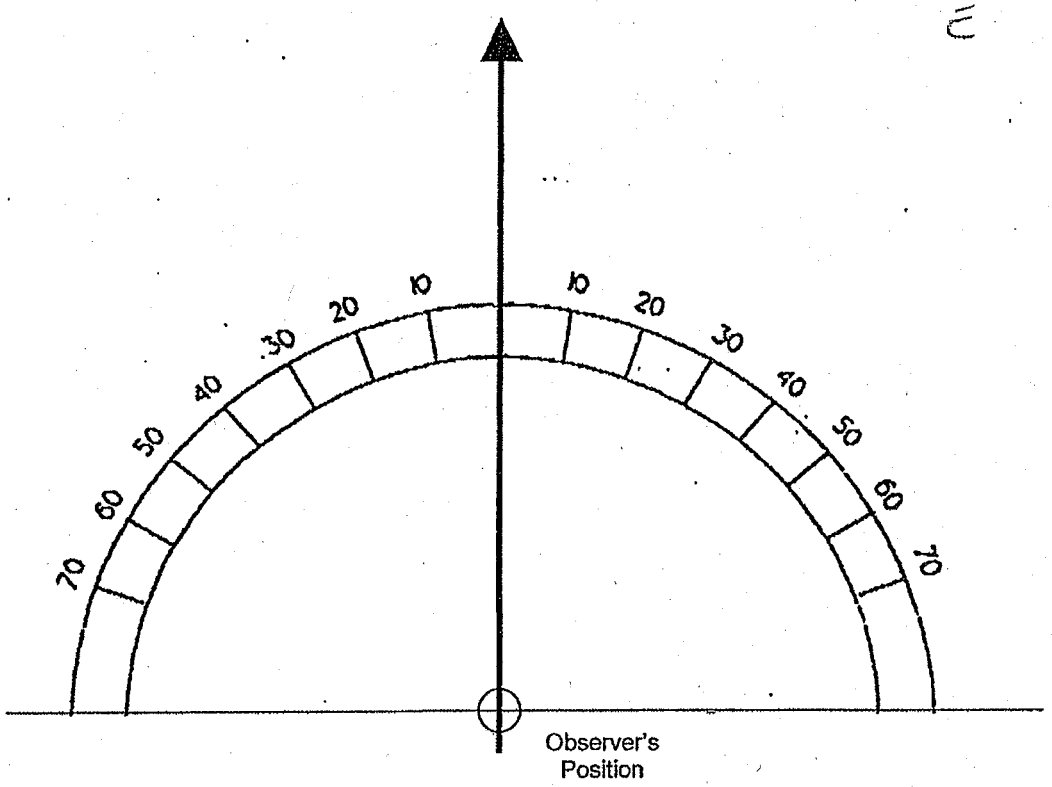

Signature: Kevin Davis

20071107 Method 9 Source Layout Sketch.doc

2-8

OCS Environmental, Inc.

U.S. Steel Gary Works
Emissions Inspection Summary

Date: 11/26/07

Start Time: 0700 (AM) / PM

End Time: 0900 AM / PM

No. 2 Precarbon ESP

BOP	Roof Monitor		Gas Cleaners	
QBOP	Roof Monitor		Gas Cleaners	
Blast Furnace	(4)	6	8	14
Blast Furnace Top	4	6	8	14

The following events or operations contributed to significant emissions:

Time	Heat/Cast Number	Operation	Comments
Emissions Observed:		No Exceedence	

20071107 Inspection Summary.doc

OCS Environmental, Inc.
Method 9 VE Inspection Form

Page 1 of 2

			Start	End
Date:	11-26-07			
Source:	4BF Roof Monitor	Emissions color:	As Noted	Same
Observation Start Time:	0700	Background:	Sky	
Observation End Time:	0759	Sky Conditions:	Cloudy	
Observer's Position:	4BF-1	Wind Speed:	5 mph	
Distance to source:	320 yds	Wind Direction:	SE	
Direction to source:	NW	Ambient Temp:	31°	
		Relative Humidity%:	90%	
Height of source:	63'	Wet Bulb Temp:	—	
Vertical angle to source:	5°			

Plume Type: (Attached) Detached None

Comments	0	15	30	45			0	15	30	45	Comments
	0	0	0	0	0	30	0	0	0	0	
	0	0	0	0	1	31	0	0	0	0	
	0	0	0	0	2	32	0	0	0	0	
	0	0	0	0	3	33	0	0	0	0	
	0	0	0	0	4	34	0	0	0	0	
	0	0	0	0	5	35	0	0	0	0	
	0	0	0	0	6	36	0	0	0	0	
	0	0	0	0	7	37	0	0	0	0	
	0	0	0	0	8	38	0	0	0	0	
1st Cast 250	0	0	0	0	9	39	0	0	0	0	
	0	0	0	0	10	40	0	0	0	0	
	0	0	0	0	11	41	0	0	0	0	
	0	0	0	0	12	42	0	0	0	0	
	0	0	0	0	13	43	0	0	0	0	
	0	0	0	0	14	44	0	0	0	0	
	0	0	0	0	15	45	0	0	0	0	
	0	0	0	0	16	46	0	0	0	0	
	0	0	0	0	17	47	0	0	0	0	
	0	0	0	0	18	48	0	0	0	0	
	0	0	0	0	19	49	0	0	0	0	
	0	0	0	0	20	50	0	0	0	0	
	0	0	0	0	21	51	0	0	0	0	
	0	0	0	0	22	52	0	0	0	0	
	0	0	0	0	23	53	0	0	0	0	
	0	0	0	0	24	54	0	0	0	0	
	0	0	0	0	25	55	0	0	0	0	
	0	0	0	0	26	56	0	0	0	0	
	0	0	0	0	27	57	0	0	0	0	
	0	0	0	0	28	58	0	0	0	0	
	0	0	0	0	29	59	0	0	0	0	

0709

Additional info (include steam dissipation point)

Observer's Signature: R. Milsap

20071107 Method 9 Inspection Form.doc

OCS Environmental, Inc.
Method 9 VE Inspection Form

			Start	End
Date:	11-26-07			
Source:	4BF Roof Monitor	Emissions color:	As Noted	Same
Observation Start Time:	0860	Background:	SKY	
Observation End Time:	0859	Sky Conditions:	Cloudy	
Observer's Position:	4BF.1	Wind Speed:	5mph	
Distance to source:	320yds.	Wind Direction:	SE	
Direction to source:	N W	Ambient Temp:	31°	
		Relative Humidity%:	90%	
Height of source:	63'	Wet Bulb Temp:	–	
Vertical angle to source:	5°			

Plume Type: (Attached) Detached None

Comments	0	15	30	45			0	15	30	45	Comments
	0	0	0	0	0	30	0	0	0	0	
	0	0	0	0	1	31	0	0	0	0	
	0	0	0	0	2	32	0	0	0	0	
	0	0	0	0	3	33	0	0	0	0	
	0	0	0	0	4	34	0	0	0	0	
	0	0	0	0	5	35	0	0	0	0	
	0	0	0	0	6	36	0	0	0	0	
	0	0	0	0	7	37	0	0	0	0	
	0	0	0	0	8	38	0	0	0	0	
	0	0	0	0	9	39	0	0	0	0	
	0	0	0	0	10	40	50	50	30	30	Black
	0	0	0	0	11	41	10	5	0	0	
	0	0	0	0	12	42	0	0	0	0	
	0	0	0	0	13	43	0	0	0	0	
	0	0	0	0	14	44	0	0	0	0	
	0	0	0	0	15	45	0	0	0	0	
	0	0	0	0	16	46	0	0	0	0	
	0	0	0	0	17	47	0	0	0	0	
	0	0	0	0	18	48	0	0	0	0	
	0	0	0	0	19	49	0	0	0	0	
	0	0	0	0	20	50	0	0	0	0	
	0	0	0	0	21	51	0	0	0	0	
	0	0	0	0	22	52	0	0	0	0	
	0	0	0	0	23	53	0	0	0	0	
	0	0	0	0	24	54	0	0	0	0	
	0	0	0	0	25	55	0	0	0	0	
	0	0	0	0	26	56	0	0	0	0	
	0	0	0	0	27	57	0	0	0	0	
	0	0	0	0	28	58	0	0	0	0	
	0	0	0	0	29	59	0	0	0	0	

Additional info (include steam dissipation point)

Observer's Signature: R. Milsap

20071107 Method 9 Inspection Form.doc

OCS Environmental, Inc.
Method 9 Source Layout Sketch

Date: 11 12/6/07

Observer Name: R. Milsap

Begin Time: 0700 Time End: 0900

No Sun Visible Times
0700
0730
0800
0830

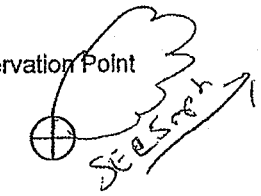

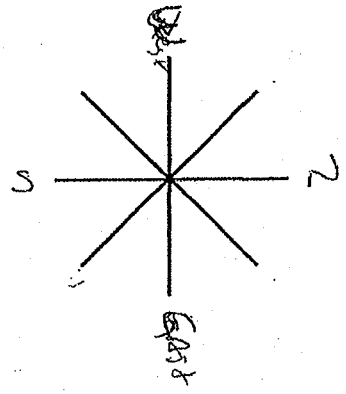

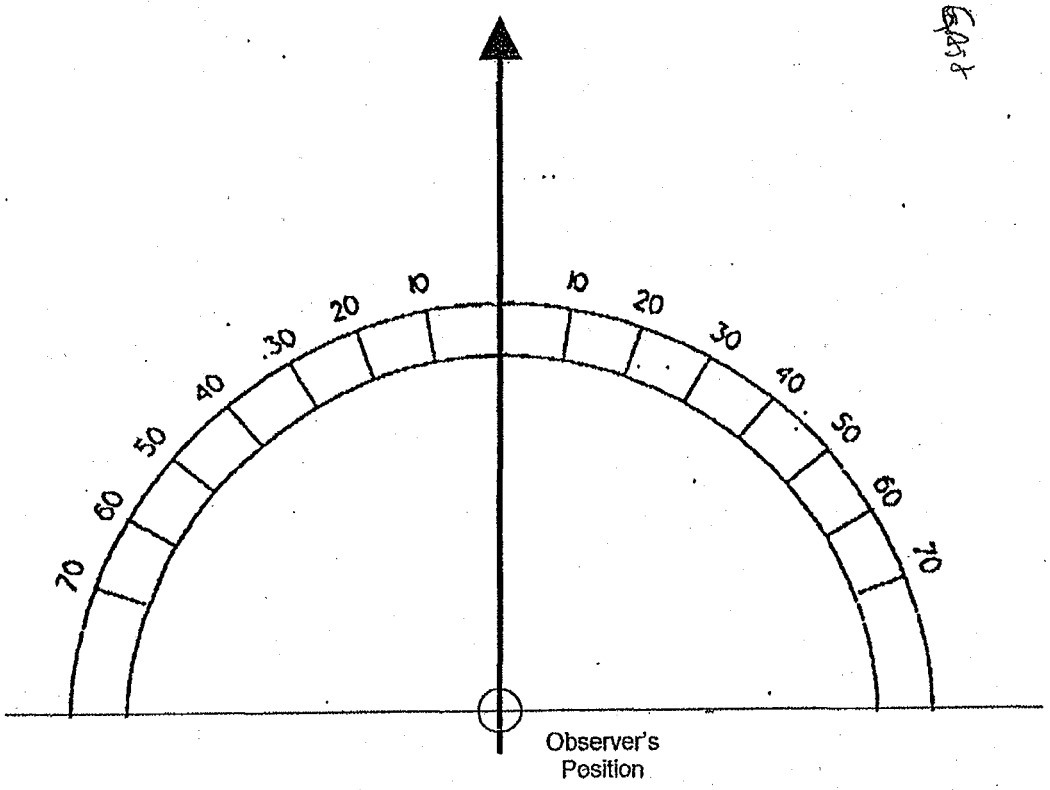

Signature: Robert Milsap

20071107 Method 9 Source Layout Sketch.doc

3-1
8313

OCS Environmental, Inc.
Method 9 VE Inspection Form

Page 1 of 3

			Start	End
Date:	11/27/07			
Source:	#8 Blast Furnace	Emissions color:	As Noted	SAME
Observation Start Time:	0849	Background:	sky	↓
Observation End Time:	0859 45	Sky Conditions:	pt. cloudy	↓
Observer's Position:	SW by boiler house	Wind Speed:	7	↓
Distance to source:	300' FT.	Wind Direction:	SW	↓
Direction to source:	NE	Ambient Temp:	29°	↓
		Relative Humidity%:	90%	↓
Height of source:	59'	Wet Bulb Temp:	—	—
Vertical angle to source:	—			

Plume Type: Attached Detached None

Comments	0	15	30	45			0	15	30	45	Comments
					0	30					
					1	31					
					2	32					
					3	33					
					4	34					
					5	35					
					6	36					
					7	37					
					8	38					
					9	39					
					10	40					
					11	41					
					12	42					
					13	43					
					14	44					
					15	45					
					16	46					
					17	47					CAST# 8813
					18	48	0	0	0	0	Drill up
					19	49	0	0	0	0	
					20	50	0	0	0	0	
					21	51	0	0	0	0	
					22	52	0	0	0	0	
					23	53	0	0	0	0	
					24	54	0	0	0	0	
					25	55	0	0	0	0	
					26	56	0	0	0	0	
					27	57	0	0	0	0	
					28	58	0	0	0	0	
					29	59	0	0	0	0	

Additional info (include steam dissipation point)

Observer's Signature: Jon Simpson

20071107 Method 9 Inspection Form.doc

OCS Environmental, Inc.
Method 9 VE Inspection Form

Date: 11/27/07
Source: 8 Blast Furnace
Observation Start Time: 0900
Observation End Time: 0 9 8 9 45
Observer's Position: SW by Boiler house
Distance to source: 300 FT
Direction to source: NE

Height of source: 59'
Vertical angle to source: —

	Start	End
Emissions color:	As Noted	SAME
Background:	Sky	
Sky Conditions:	Pt. cloudy	clear
Wind Speed:	7	
Wind Direction:	SW	
Ambient Temp:	39°	
Relative Humidity%:	90%	
Wet Bulb Temp:	—	—

Plume Type: Attached Detached None

CAST #3313

Comments	0	15	30	45			0	15	30	45	Comments
	0	0	0	0	0	30	0	0	0	0	
	0	0	0	0	1	31	0	0	0	0	
	0	0	0	0	2	32	0	0	0	0	
	0	0	0	0	3	33	0	0	0	0	
	0	0	0	0	4	34	0	0	0	0	
	0	0	0	0	5	35	0	0	0	0	
	0	0	0	0	6	36	0	0	0	0	
	0	0	0	0	7	37	0	0	0	0	
	0	0	0	0	8	38	0	0	0	0	
	0	0	0	0	9	39	0	0	0	0	
	0	0	0	0	10	40	0	0	0	0	
	0	0	0	0	11	41	0	0	0	0	
	0	0	0	0	12	42	0	0	0	0	
	0	0	0	0	13	43	0	0	0	0	
	0	0	0	0	14	44	0	0	0	0	
	0	0	0	0	15	45	0	0	0	0	
	0	0	0	0	16	46	0	0	0	0	
	0	0	0	0	17	47	0	0	0	0	
	0	0	0	0	18	48	0	0	0	0	
	0	0	0	0	19	49	0	0	0	0	
	0	0	0	0	20	50	0	0	0	0	
	0	0	0	0	21	51	0	0	0	0	
	0	0	0	0	22	52	0	0	0	0	
	0	0	0	0	23	53	0	0	0	0	
	0	0	0	0	24	54	0	0	0	0	
	0	0	0	0	25	55	0	0	0	0	
	0	0	0	0	26	56	0	0	0	0	
	0	0	0	0	27	57	0	0	0	0	
	0	0	0	0	28	58	0	0	0	0	
	0	0	0	0	29	59	0	0	0	0	

Additional info (include steam dissipation point)

Observer's Signature: Jon Simpson

20071107 Method 9 Inspection Form.doc

OCS Environmental, Inc.
Method 9 VE Inspection Form

			Start	End
Date:	11/27/07			
Source:	SB/MT Furnace	Emissions color:	As Noted	SAME
Observation Start Time:	1000	Background:	sky	↓
Observation End Time:	1059 45	Sky Conditions:	clear	↓
Observer's Position:	SW by boiler house	Wind Speed:	7	↓
Distance to source:	300 FT	Wind Direction:	SW	↓
Direction to source:	NE	Ambient Temp:	31°	↓
		Relative Humidity%:	90%	↓
Height of source:	59'	Wet Bulb Temp:	—	—
Vertical angle to source:	—			

Plume Type: Attached Detached (None)

CAST # 3313

Comments	0	15	30	45			0	15	30	45	Comments
	0	0	0	0	0	30	0	0	0	0	
	0	0	0	0	1	31	0	0	0	0	
	0	0	0	0	2	32	0	0	0	0	
	0	0	0	0	3	33	0	0	0	0	
	0	0	0	0	4	34	0	0	0	0	
	0	0	0	0	5	35	0	0	0	0	
	0	0	0	0	6	36	0	0	0	0	
	0	0	0	0	7	37	0	0	0	0	
	0	0	0	0	8	38	0	0	0	0	
	0	0	0	0	9	39	0	0	0	0	
	0	0	0	0	10	40	0	0	0	0	
	0	0	0	0	11	41	0	0	0	0	
	0	0	0	0	12	42	0	0	0	0	
	0	0	0	0	13	43	0	0	0	0	
	0	0	0	0	14	44	0	0	0	0	
	0	0	0	0	15	45	0	0	0	0	
	0	0	0	0	16	46	0	0	0	0	
	0	0	0	0	17	47	0	0	0	0	
	0	0	0	0	18	48	0	0	0	0	
	0	0	0	0	19	49	0	0	0	0	
	0	0	0	0	20	50	0	0	0	0	
	0	0	0	0	21	51	0	0	0	0	
	0	0	0	0	22	52	0	0	0	0	
	0	0	0	0	23	53	0	0	0	0	
	0	0	0	0	24	54	0	0	0	0	
	0	0	0	0	25	55	0	0	0	0	
	0	0	0	0	26	56	0	0	0	0	
	0	0	0	0	27	57	0	0	0	0	
	0	0	0	0	28	58	0	0	0	0	
	0	0	0	0	29	59	0	0	0	0	End CAST

Additional info (include steam dissipation point)

Observer's Signature: Jon Simpson

20071107 Method 9 Inspection Form.doc

OCS Environmental, Inc.
Method 9 Source Layout Sketch

CAST # 3313

Date: 11/27/2007

Observer Name: Jon Simpson

Begin Time: 0948 Time End: 1059

CAST # 3313

No Sun Visible Times

Observation Point

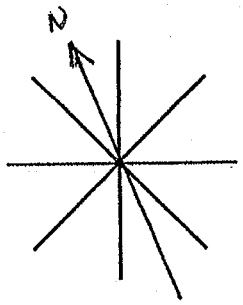

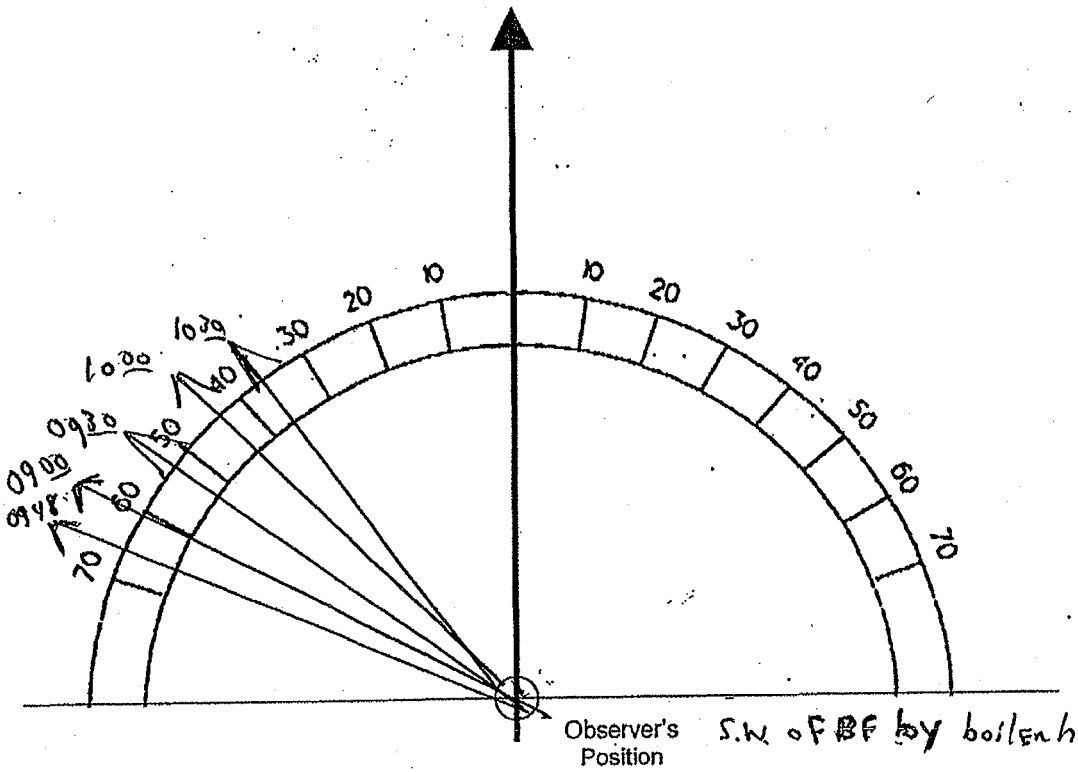

S.W. of BF by boilerhouse wall.

Signature: Jon Simpson

20071107 Method 9 Source Layout Sketch.doc

OCS Environmental, Inc.
Method 9 VE Inspection Form

Page 1 of 3

			Start	End
Date:	11/27/07	Emissions color:	AS NOTED	SAME
Source:	8 BLAST FURNACE	Background:	SKY	↓
Observation Start Time:	1133	Sky Conditions:	CLEAR	↓
Observation End Time:	1159 45	Wind Speed:	7	↓
Observer's Position:	SW by boilerhouse	Wind Direction:	SW	↓
Distance to source:	300' FT	Ambient Temp:	39	↓
Direction to source:	NE	Relative Humidity%:	90%	↓
		Wet Bulb Temp:	—	—
Height of source:	59'			
Vertical angle to source:	—			

Plume Type: Attached Detached (None)

Comments	0	15	30	45			0	15	30	45	Comments
					0	30					
					1	31					
					2	32					CAST P3/4
					3	33	0	0	0	0	DRILL up
					4	34	0	0	0	0	
					5	35	0	0	0	0	
					6	36	0	0	0	0	
					7	37	0	0	0	0	
					8	38	0	0	0	0	
					9	39	0	0	0	0	
					10	40	0	0	0	0	
					11	41	0	0	0	0	
					12	42	0	0	0	0	
					13	43	0	0	0	0	
					14	44	0	0	0	0	
					15	45	0	0	0	0	
					16	46	0	0	0	0	
					17	47	0	0	0	0	
					18	48	0	0	0	0	
					19	49	0	0	0	0	
					20	50	0	0	0	0	
					21	51	0	0	0	0	
					22	52	0	0	0	0	
					23	53	0	0	0	0	
					24	54	0	0	0	0	
					25	55	0	0	0	0	
					26	56	0	0	0	0	
					27	57	0	0	0	0	
					28	58	0	0	0	0	
					29	59	0	0	0	0	

Additional info (include steam dissipation point)

Observer's Signature: Jon Simpson

20071107 Method 9 Inspection Form.doc

OCS Environmental, Inc.
Method 9 VE Inspection Form

Date: 11/27/07
Source: 4 Blast Furnace
Observation Start Time: 1200
Observation End Time: 1259 45
Observer's Position: SW by boiler house
Distance to source: 360'
Direction to source: NE
Height of source: 59'
Vertical angle to source: —

	Start	End
Emissions color:	As Noted	Same
Background:	sky	↓
Sky Conditions:	clear	↓
Wind Speed:	7	↓
Wind Direction:	SW	N
Ambient Temp:	38	↓
Relative Humidity%:	90%	↓
Wet Bulb Temp:	—	—

Plume Type: Attached Detached None

CAST # 8314

Comments	0	15	30	45			0	15	30	45	Comments
	0	0	0	0	0	30	0	0	0	0	
	0	0	0	0	1	31	0	0	0	0	
	0	0	0	0	2	32	0	0	0	0	
	0	0	0	0	3	33	0	0	0	0	
	0	0	0	0	4	34	0	0	0	0	
	0	0	0	0	5	35	0	0	0	0	
	0	0	0	0	6	36	0	0	0	0	
	0	0	0	0	7	37	0	0	0	0	
	0	0	0	0	8	38	0	0	0	0	
	0	0	0	0	9	39	0	0	0	0	
	0	0	0	0	10	40	0	0	0	0	
	0	0	0	0	11	41	0	0	0	0	
	0	0	0	0	12	42	0	0	0	0	
	0	0	0	0	13	43	0	0	0	0	
	0	0	0	0	14	44	0	0	0	0	
	0	0	0	0	15	45	0	0	0	0	
	0	0	0	0	16	46	0	0	0	0	
	0	0	0	0	17	47	0	0	0	0	
	0	0	0	0	18	48	0	0	0	0	
	0	0	0	0	19	49	0	0	0	0	
	0	0	0	0	20	50	0	0	0	0	
	0	0	0	0	21	51	0	0	0	0	
	0	0	0	0	22	52	0	0	0	0	
	0	0	0	0	23	53	0	0	0	0	
	0	0	0	0	24	54	0	0	0	0	
	0	0	0	0	25	55	0	0	0	0	
	0	0	0	0	26	56	0	0	0	0	
	0	0	0	0	27	57	0	0	0	0	
	0	0	0	0	28	58	0	0	0	0	
	0	0	0	0	29	59	0	0	0	0	

Additional Info (include steam dissipation point)

Observer's Signature: Jon Simpson

20071107 Method 9 Inspection Form.doc

OCS Environmental, Inc.
Method 9 VE Inspection Form

Page 3 of 3

Date: 11/27/07
Source: 8 BLAST FURNACE
Observation Start Time: 1300
Observation End Time: 1319 45
Observer's Position: S'W by boiler house
Distance to source: 300'
Direction to source: NE

Height of source: 59'
Vertical angle to source: —

	Start	End
Emissions color:	AS NOTED	SAME
Background:	sky	
Sky Conditions:	clear	
Wind Speed:	7	
Wind Direction:	N	
Ambient Temp:	36°	
Relative Humidity%:	90%	
Wet Bulb Temp:	—	—

Plume Type: Attached Detached None

CAST # 3314

Comments	0	15	30	45			0	15	30	45	Comments
	0	0	0	0	0	30					
	0	0	0	0	1	31					
	0	0	0	0	2	32					
	0	0	0	0	3	33					
	0	0	0	0	4	34					
	0	0	0	0	5	35					
	0	0	0	0	6	36					
	0	0	0	0	7	37					
	0	0	0	0	8	38					
	0	0	0	0	9	39					
	0	0	0	0	10	40					
	0	0	0	0	11	41					
	0	0	0	0	12	42					
	0	0	0	0	13	43					
	0	0	0	0	14	44					
plugging	0	0	0	0	15	45					
	0	0	0	0	16	46					
	0	0	0	0	17	47					
	0	0	0	0	18	48					
End cast	0	0	0	0	19	49					
					20	50					
					21	51					
					22	52					
					23	53					
					24	54					
					25	55					
					26	56					
					27	57					
					28	58					
					29	59					

Additional info (include steam dissipation point)

Observer's Signature: Jon Simpson

20071107 Method 9 Inspection Form.doc

OCS Environmental, Inc.
Method 9 Source Layout Sketch

Date: 11/27/07 CAST #3314

Observer Name: Jon Simpson

Begin Time: 1133 Time End: 1320

No Sun Visible Times

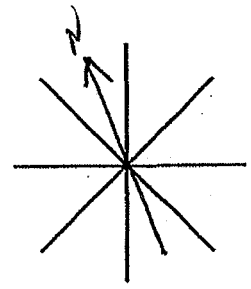

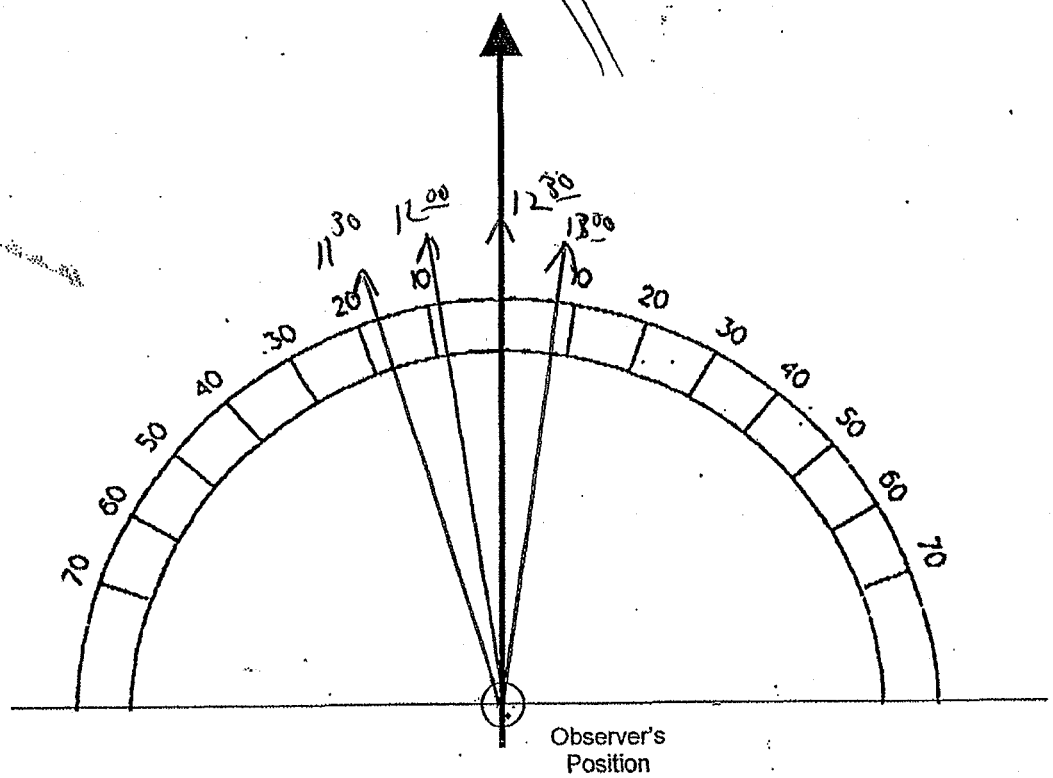

Signature: Jon Simpson

20071107 Method 9 Source Layout Sketch.doc

OCS Environmental, Inc.
Method 9 VE Inspection Form

Page 1 of 3

			Start	End
Date:	11/20/07	Emissions color:	As Noted	SAME
Source:	#4 Blast Furnace	Background:	Sky	
Observation Start Time:	0940	Sky Conditions:	OVERCAST	
Observation End Time:	0845	Wind Speed:	3	
Observer's Position:	SW by stop sign	Wind Direction:	NE	
Distance to source:	200' FT.	Ambient Temp:	46°	
Direction to source:	NE	Relative Humidity%:	100%	
Height of source:	63'	Wet Bulb Temp:	—	—
Vertical angle to source:	—			

Plume Type: (Attached) Detached None

Comments	0	15	30	45			0	15	30	45	Comments
					0	30					
					1	31					
					2	32					
					3	33					
					4	34					
					5	35					
					6	36					
					7	37					
					8	38					
					9	39					CAST #195
					10	40	0	0	0	0	Drill up
					11	41	0	0	0	0	
					12	42	0	0	0	0	
					13	43	0	0	0	0	
					14	44	0	0	0	0	
					15	45	0	0	0	0	
					16	46	0	5	5	5	Brown-Tilt Spout
					17	47	5	10	10	10	Roof
					18	48	10	10	10	5	
					19	49	5	5	10	10	
					20	50	5	5	5	5	
					21	51	0	0	0	0	
					22	52	0	0	0	0	
					23	53	0	0	0	0	
					24	54	0	0	0	0	
					25	55	0	0	0	0	
					26	56	0	0	0	0	
					27	57	0	0	0	0	
					28	58	0	0	0	0	
					29	59	0	0	0	0	

Additional info (include steam dissipation point)

Observer's Signature: Jon Simpson

20071107 Method 9 Inspection Form.doc

OCS Environmental, Inc.
Method 9 VE Inspection Form

Page 2 of 3

			Start	End
Date:	11/20/07	Emissions color:	As Noted	SAME
Source:	#4 Blast Furnace	Background:	Sky	
Observation Start Time:	0900	Sky Conditions:	Overcast	
Observation End Time:	0959 45	Wind Speed:	3	
Observer's Position:	SW by Stop sign	Wind Direction:	NE	
Distance to source:	200 FT.	Ambient Temp:	46°	
Direction to source:	NE	Relative Humidity%:	100%	
		Wet Bulb Temp:	—	—
Height of source:	63			
Vertical angle to source:	—			

Plume Type: Attached Detached None

CAST # 195

Comments	0	15	30	45			0	15	30	45	Comments
	0	0	0	0	0	30	0	0	0	0	
Brown-Tiltspout	0	5	5	5	1	31	0	0	0	0	
Roof	5	5	5	5	2	32	0	0	0	0	
	5	5	5	5	3	33	0	0	0	0	
	5	5	5	5	4	34	0	0	0	0	
	5	5	5	0	5	35	0	0	0	0	
	5	5	5	5	6	36	0	0	0	0	
	5	0	0	0	7	37	0	0	0	0	
	5	5	0	0	8	38	0	0	0	0	
	0	0	0	0	9	39	0	0	0	0	
	0	0	0	0	10	40	0	0	0	0	
	0	0	0	0	11	41	0	0	0	0	
	0	0	0	0	12	42	0	0	0	0	
	0	0	0	0	13	43	0	0	0	0	
	0	0	0	0	14	44	0	0	0	0	
	0	0	0	5	15	45	0	0	0	0	
	5	0	5	5	16	46	0	0	0	0	
	5	5	0	0	17	47	0	0	0	0	
	0	0	0	0	18	48	0	0	0	0	
	0	0	0	0	19	49	0	0	0	0	Brown/
	0	0	0	0	20	50	0	0	0	10	Orange-Tiltspout
	0	0	0	0	21	51	10	10	10	5	Roof switching cars
	0	0	0	0	22	52	5	5	5	5	
	0	0	0	0	23	53	5	5	5	10	
	0	0	0	0	24	54	10	15	10	10	
	0	0	0	0	25	55	10	15	15	15	
	0	5	5	5	26	56	15	15	15	15	
	0	5	0	0	27	57	15	20	20	20	
	0	0	0	0	28	58	25	15	15	10	
	0	0	0	0	29	59	10	5	5	5	

Additional info (include steam dissipation point)

Observer's Signature: Jon Simpson

20071107 Method 9 Inspection Form.doc

OCS Environmental, Inc.
Method 9 VE Inspection Form

			Start	End
Date:	11/20/07			
Source:	4 BLAST FURNACE	Emissions color:	AS NOTED	SAME
Observation Start Time:	10 00	Background:	SKY	↓
Observation End Time:	10 35 45	Sky Conditions:	OVERCAST	↓
Observer's Position:	S.W. by stop sign	Wind Speed:	3	↓
Distance to source:	200 FT.	Wind Direction:	NE	↓
Direction to source:	NE	Ambient Temp:	46	↓
		Relative Humidity%:	100%	↓
Height of source:	63'	Wet Bulb Temp:	—	—
Vertical angle to source:	—			

Plume Type: (Attached) Detached None

CAST #195

Comments	0	15	30	45			0	15	30	45	Comments
BROWN - TILTSPOUT	5	5	5	5	0	30	0	5	5	5	BROWN - TILTSPOUT
ROOF	5	5	5	5	1	31	5	5	5	5	ROOF - plugging
	5	5	5	5	2	32	5	5	0	0	
	5	0	5	0	3	33	0	0	0	0	
	0	0	0	0	4	34	0	0	0	0	
	0	0	0	0	5	35	0	0	0	0	
	0	0	0	0	6	36					
	0	0	0	0	7	37					
	0	0	0	0	8	38					
	0	0	0	0	9	39					
	0	0	0	0	10	40					
	0	0	0	0	11	41					
	0	0	0	0	12	42					
	0	0	0	0	13	43					
	0	0	0	0	14	44					
	0	0	0	0	15	45					
	0	0	0	0	16	46					
	0	0	0	0	17	47					
	0	0	0	0	18	48					
	0	0	0	0	19	49					
	0	0	0	0	20	50					
	0	0	0	0	21	51					
	0	0	0	0	22	52					
	0	0	0	0	23	53					
	0	0	0	0	24	54					
	0	0	0	0	25	55					
	0	0	0	0	26	56					
	0	0	0	0	27	57					
	0	0	0	0	28	58					
	0	0	0	0	29	59					

Additional info (include steam dissipation point)

Observer's Signature: Jon Simpson

OCS Environmental, Inc.
Method 9 Source Layout Sketch

CAST # 195

Date: 11/20/07

Observer Name: Jon Simpson

Begin Time: 0840 Time End: 1036

No Sun Visible Times
0840, 0900, 0930, 1000, 1030,

Observation Point

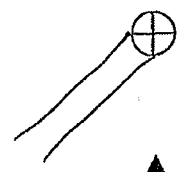

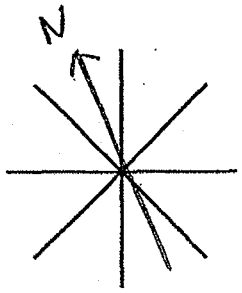

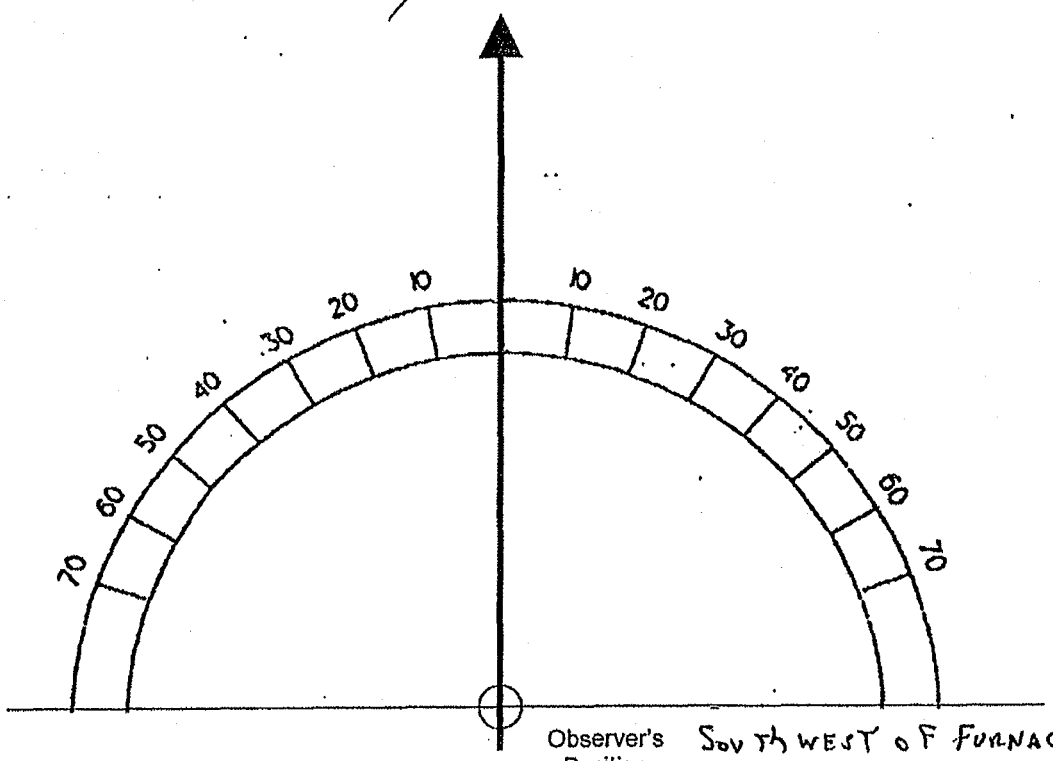

Observer's Position SOUTHWEST OF FURNACE, ACROSS FROM STOPSIGN.

Signature: Jon Simpson

20071107 Method 9 Source Layout Sketch.doc

196

OCS Environmental, Inc.
Method 9 VE Inspection Form

Page 1 of 2

			Start	End
Date:	11/20/07	Emissions color:	As Noted	SAME
Source:	4 Blast Furnace	Background:	Sky	
Observation Start Time:	1113	Sky Conditions:	Overcast	
Observation End Time:	1159 45	Wind Speed:	3	
Observer's Position:	SW. by stop sign	Wind Direction:	NE	
Distance to source:	200 FT	Ambient Temp:	47°	
Direction to source:	NE	Relative Humidity%:	100%	
Height of source:	63'	Wet Bulb Temp:	—	—
Vertical angle to source:	—			

Plume Type: (Attached) Detached None

Comments	0	15	30	45			0	15	30	45	Comments
					0	30	0	0	5	5	Brown - Tilt spout Roof
					1	31	5	5	5	5	
					2	32	5	0	0	0	
					3	33	0	0	5	5	
					4	34	0	0	0	0	
					5	35	5	5	0	0	
					6	36	5	5	5	5	
					7	37	5	5	5	5	
					8	38	5	5	5	5	
					9	39	5	5	5	10	
					10	40	10	5	5	0	
					11	41	0	0	0	0	
CAST #196					12	42	0	0	0	0	
Drill up	0	0	0	0	13	43	0	0	0	0	
	0	0	0	0	14	44	0	0	0	0	
	0	0	0	0	15	45	0	0	0	0	
	0	0	0	0	16	46	0	0	0	0	
	0	0	0	0	17	47	0	0	0	0	
	0	0	0	0	18	48	0	0	0	0	
	0	0	0	0	19	49	0	0	0	0	
	0	0	0	0	20	50	0	0	0	0	
	0	0	0	0	21	51	0	0	0	5	Brown - Tilt spout
	0	0	0	0	22	52	5	5	5	5	Roof.
	0	0	0	0	23	53	5	0	0	0	
	0	0	0	0	24	54	0	0	0	0	
	0	0	0	0	25	55	0	0	0	5	
	0	0	0	0	26	56	5	5	0	0	
	0	0	0	0	27	57	0	0	0	0	
	0	0	0	0	28	58	0	5	5	5	
	0	0	0	0	29	59	0	0	0	0	

Additional info (include steam dissipation point)

Observer's Signature: Jon Simpson

20071107 Method 9 Inspection Form.doc

OCS Environmental, Inc.
Method 9 VE Inspection Form

Page 2 of 2

			Start	End
Date:	11/20/07	Emissions color:	AS NOTED	SAME
Source:	4 BLAST FURNACE	Background:	SKY	↓
Observation Start Time:	1200	Sky Conditions:	OVERCAST	↓
Observation End Time:	1245 45	Wind Speed:	3	↓
Observer's Position:	SW by STOP SIGN	Wind Direction:	NE	↓
Distance to source:	200 FT	Ambient Temp:	47°	↓
Direction to source:	NE	Relative Humidity%:	100%	↓
Height of source:	63'	Wet Bulb Temp:	—	—
Vertical angle to source:	—			

Plume Type: (Attached) Detached None

Comments	0	15	30	45			0	15	30	45	Comments
CAST # 196	0	0	0	0	0	30	0	0	0	0	
	0	0	0	0	1	31	0	0	0	0	
	0	0	0	0	2	32	0	0	0	0	
	0	0	0	0	3	33	0	0	0	0	
	0	0	0	0	4	34	0	0	0	0	
	0	0	0	0	5	35	0	0	0	0	
	0	0	0	0	6	36	0	0	0	0	
	0	0	0	0	7	37	0	0	0	0	
	0	0	0	0	8	38	0	0	0	0	
	0	0	0	0	9	39	0	0	0	0	
BROWN - change	5	5	10	10	10	40	0	0	5	5	BROWN - TILT SPOUT
SUB OARS, TILT	10	5	5	0	11	41	5	5	5	5	ROOF
SPOUT ROOF	0	0	0	0	12	42	5	5	5	5	
	0	0	0	0	13	43	5	5	5	5	plug
	0	0	0	0	14	44	5	5	5	5	
	0	0	0	0	15	45	0	5	0	0	
	0	0	0	0	16	46					
	0	0	0	0	17	47					
	0	0	0	0	18	48					
	0	0	0	0	19	49					
	0	0	0	0	20	50					
	0	0	0	0	21	51					
	0	0	0	0	22	52					
	0	0	0	0	23	53					
	0	0	0	0	24	54					
	0	0	0	0	25	55					
	0	0	0	0	26	56					
	0	0	0	0	27	57					
	0	0	0	0	28	58					
	0	0	0	0	29	59					

Additional info (include steam dissipation point)

Observer's Signature: Jon Simpson

20071107 Method 9 Inspection Form.doc

OCS Environmental, Inc.
Method 9 Source Layout Sketch

CAST #196

Date: 11/20/07

Observer Name: Jon Simpson

Begin Time: 1113 Time End: 1246

No Sun Visible Times
1113, 1130, 1200
1230, 1246

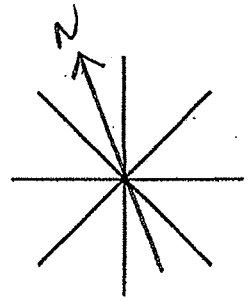

Observation Point

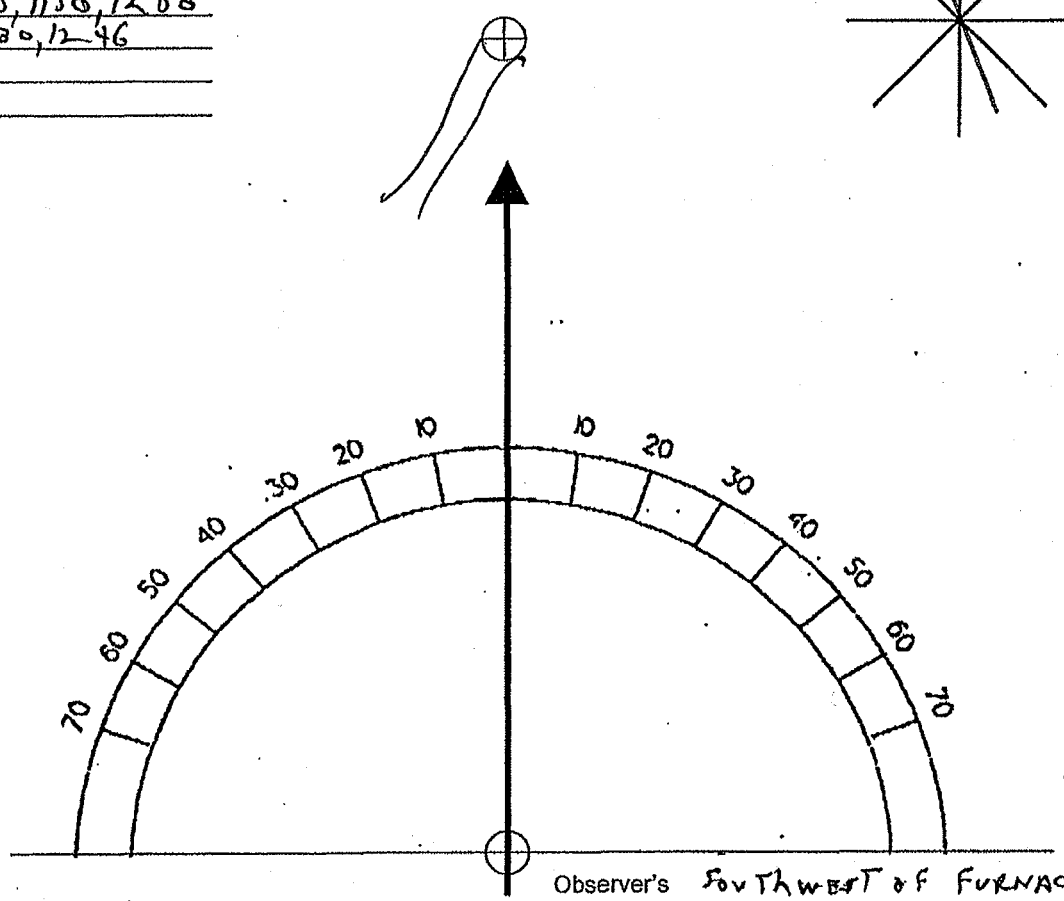

Observer's Position Southwest of Furnace, across from stop sign.

Signature: Jon Simpson

20071107 Method 9 Source Layout Sketch.doc

OCS Environmental, Inc.
Method 9 VE Inspection Form

Page 1 of 2

Date: 11/26/07
Source: #4 BLAST FURNACE
Observation Start Time: 0709
Observation End Time: 0759 45
Observer's Position: S.W. of B.F. by STOP SIGN
Distance to source: 300 FT
Direction to source: NE

Height of source: 63'
Vertical angle to source: —

	Start	End
Emissions color:	AS NOTED	SAME
Background:	SKY	
Sky Conditions:	OVERCAST	
Wind Speed:	5	
Wind Direction:	SE	
Ambient Temp:	31°	
Relative Humidity%:	90%	
Wet Bulb Temp:	—	

Plume Type: Attached Detached None

Comments	0	15	30	45			0	15	30	45	Comments
					0	30	0	0	0	0	
					1	31	5	10	5	5	BROWN-TITSPOUT
					2	32	5	5	0	5	ROOF.
					3	33	5	5	5	0	
					4	34	0	5	5	0	
					5	35	0	0	0	0	
					6	36	0	0	0	0	
					7	37	0	0	0	0	
CAST # 250					8	38	0	0	0	0	
DRILL up	0	0	0	0	9	39	0	0	0	0	
	0	0	0	0	10	40	0	0	0	0	
	0	0	0	0	11	41	0	0	0	0	
	0	0	0	0	12	42	0	0	0	0	
	0	0	0	0	13	43	0	0	0	0	
	0	0	0	0	14	44	0	0	0	5	
	0	0	0	0	15	45	5	0	0	0	
	0	0	0	0	16	46	5	0	5	5	
	0	0	0	0	17	47	0	0	0	0	
	0	0	0	0	18	48	0	0	5	5	
	0	0	0	0	19	49	0	5	5	5	
	0	0	0	0	20	50	5	5	0	0	
	0	0	0	0	21	51	5	5	5	5	
	0	0	0	0	22	52	5	5	5	5	
	0	0	0	0	23	53	5	5	5	5	
	0	0	0	0	24	54	5	5	5	5	
	0	0	0	0	25	55	5	5	10	10	
	0	0	0	0	26	56	10	5	5	5	
	0	0	0	0	27	57	5	5	5	5	
	0	0	0	0	28	58	5	5	5	5	
	0	0	0	0	29	59	10	10	10	10	

Additional info (include steam dissipation point)

Observer's Signature: Jon Simpson

20071107 Method 9 Inspection Form.doc

OCS Environmental, Inc.
Method 9 VE Inspection Form

Page 2 of 2

			Start	End
Date:	11/26/07	Emissions color:	AS NOTED	SAME
Source:	#4 BLAST FURNACE	Background:	SKY	
Observation Start Time:	0900	Sky Conditions:	OVERCAST	
Observation End Time:	0544	Wind Speed:	5	
Observer's Position:	S.W. of 8.F. by STOPSIGN	Wind Direction:	S.E.	
Distance to source:	300' FT	Ambient Temp:	31°	
Direction to source:	N.E.	Relative Humidity%:	90%	
Height of source:	63'	Wet Bulb Temp:	—	
Vertical angle to source:	—			

Plume Type: Attached Detached None

CAST #250

Comments	0	15	30	45			0	15	30	45	Comments
BROWN-TIT	10	10	15	10	0	30	0	0	0	0	
SPOUT ROOF	10	5	5	5	1	31	0	0	0	0	
	5	5	5	10	2	32	0	0	0	0	
	5	5	5	5	3	33	0	0	0	0	
	5	5	5	5	4	34	0	0	0	0	
	5	5	5	5	5	35	0	0	0	0	
	0	0	0	0	6	36	0	0	0	0	
	0	0	0	0	7	37	0	0	0	0	
	0	0	0	0	8	38	0	0	0	0	
	0	0	0	0	9	39	0	0	0	0	
	0	0	0	0	10	40	0	0	0	0	plugging
	0	0	0	0	11	41	0	0	0	0	
	0	0	0	0	12	42	0	0	0	0	
	0	0	0	0	13	43	0	0	0	0	
	0	0	0	0	14	44	0	0	0	0	
	0	0	0	0	15	45					
	0	0	0	0	16	46					
	0	0	0	0	17	47					
	0	0	0	0	18	48					
	0	0	0	0	19	49					
	0	0	0	0	20	50					
	0	0	0	0	21	51					
	0	0	0	0	22	52					
	0	0	0	0	23	53					
	0	0	0	0	24	54					
	0	0	0	0	25	55					
	0	0	0	0	26	56					
	0	0	0	0	27	57					
	0	0	0	0	28	58					
	0	0	0	0	29	59					

Additional info (include steam dissipation point)

Observer's Signature: Jon Simpson

20071107 Method 9 Inspection Form.doc

OCS Environmental, Inc.
Method 9 Source Layout Sketch

CAST # 250

Date: 11/26/2007

Observer Name: Jon Simpson

Begin Time: 0709

Time End: 0845

No Sun Visible Times
0709, 0730, 0800,
0830,

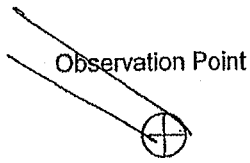

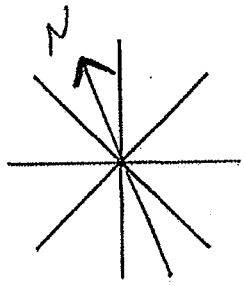

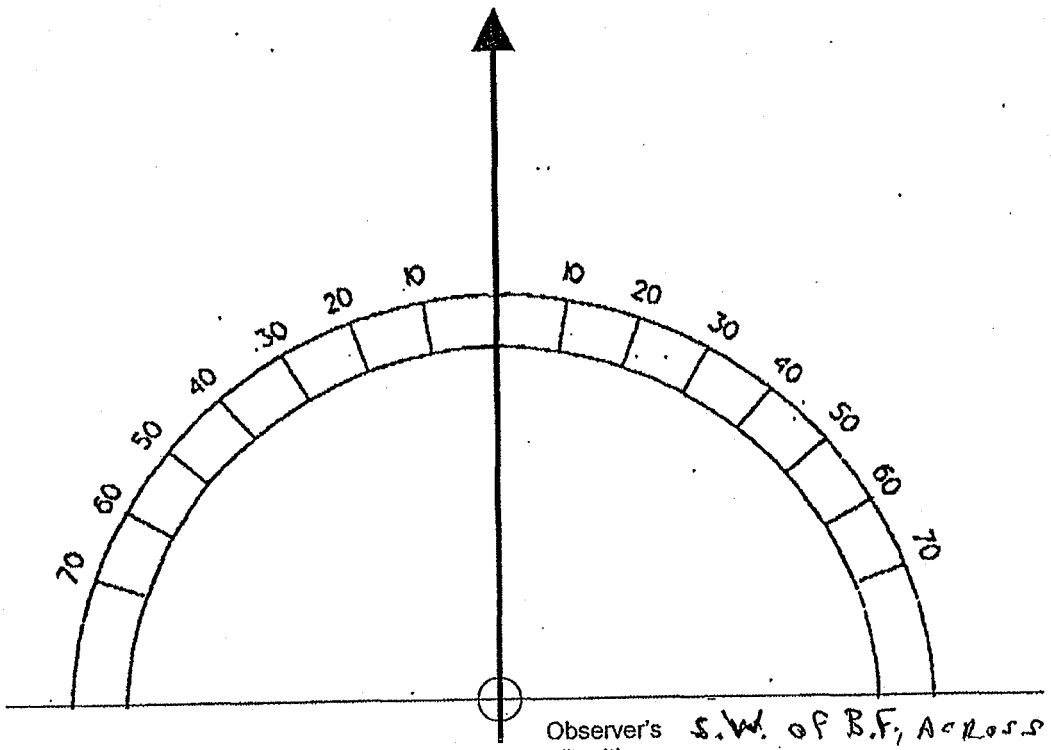

Observer's Position S.W. of B.F., Across Street From Stop Sign.

Signature: Jon Simpson

20071107 Method 9 Source Layout Sketch.doc

OCS Environmental, Inc.
Method 9 VE Inspection Form

Page 1 of 3

			Start	End
Date:	11/26/07			
Source:	# 4 BLAST FURNACE	Emissions color:	As Noted	SAME
Observation Start Time:	0932	Background:	SKY	
Observation End Time:	0959 45	Sky Conditions:	OVERCAST	
Observer's Position:	S.W. of B.F. by stop sign	Wind Speed:	5	
Distance to source:	300 ft.	Wind Direction:	S.E.	
Direction to source:	NE	Ambient Temp:	31°	
		Relative Humidity%:	90%	
Height of source:	63'	Wet Bulb Temp:	—	—
Vertical angle to source:	—			

Plume Type: (Attached) Detached None

Comments	0	15	30	45			0	15	30	45	Comments
					0	30					
					1	31					CAST #251
					2	32	0	0	0	0	Drill up
					3	33	0	0	0	0	
					4	34	0	0	0	0	
					5	35	0	0	0	0	
					6	36	0	0	0	5	Brown - T/T spout
					7	37	5	5	5	5	Roof
					8	38	10	10	15	10	
					9	39	5	5	5	5	
					10	40	10	10	5	5	
					11	41	10	10	10	15	
					12	42	10	10	10	10	
					13	43	10	5	10	10	
					14	44	5	10	5	10	
					15	45	10	5	5	5	
					16	46	5	5	5	5	
					17	47	5	10	10	10	
					18	48	10	10	10	10	
					19	49	10	5	5	5	
					20	50	5	10	15	10	
					21	51	10	10	5	5	
					22	52	10	10	10	10	
					23	53	10	5	5	5	
					24	54	10	5	10	10	
					25	55	10	10	15	15	
					26	56	10	5	5	5	
					27	57	5	5	5	5	
					28	58	5	10	10	10	
					29	59	10	10	10	10	

Additional info (include steam dissipation point)

Observer's Signature: Jon Simpson

20071107 Method 9 Inspection Form.doc

OCS Environmental, Inc.
Method 9 VE Inspection Form

Date: 11/26/07
Source: #4 BLAST FURNACE
Observation Start Time: 1000
Observation End Time: 105945
Observer's Position: S.W. of B.F. by stop sign
Distance to source: 300 FT
Direction to source: NE
Height of source: 63
Vertical angle to source: —

	Start	End
Emissions color:	As Noted	SAME
Background:	Sky	
Sky Conditions:	OVERCAST	
Wind Speed:	5	
Wind Direction:	S.E.	
Ambient Temp:	31°	
Relative Humidity%:	90%	
Wet Bulb Temp:	—	—

Plume Type: (Attached) Detached None

CAST #251

Comments	0	15	30	45			0	15	30	45	Comments
RED/BROWN-TILT	10	10	90	60	0	30	10	5	5	5	BROWN-TILT SPOUT
SPOUT ROOF	50	30	30	25	1	31	5	5	5	5	ROOF
	20	20	20	15	2	32	5	5	5	5	AND FROM UNDER
	10	10	10	10	3	33	5	5	5	5	SUB CAR AREA
	15	15	15	10	4	34	5	5	5	5	
	10	5	5	5	5	35	5	5	5	15	
	5	5	5	5	6	36	100	100	45	25	
	5	5	5	5	7	37	25	35	35	30	
	5	5	5	5	8	38	30	30	30	30	
	5	5	5	5	9	39	30	25	15	15	
	5	5	5	5	10	40	15	15	15	10	
	5	5	5	5	11	41	10	10	5	5	
	5	5	5	5	12	42	5	5	0	5	
	10	10	10	10	13	43	5	0	0	0	
	10	10	10	10	14	44	0	0	0	0	
	10	10	10	10	15	45	5	5	5	5	
	10	10	10	5	16	46	5	5	5	5	
	10	10	10	10	17	47	5	5	5	5	
	10	10	10	10	18	48	5	5	5	5	
	5	5	5	5	19	49	5	5	5	5	
	5	5	5	5	20	50	5	5	5	5	
	5	5	5	15	21	51	5	0	5	5	
	10	5	5	5	22	52	5	5	5	5	
	0	0	5	5	23	53	5	5	5	5	
	5	5	5	5	24	54	5	5	5	5	
	5	5	5	5	25	55	5	5	5	5	
	5	5	5	5	26	56	5	5	5	5	
	5	5	5	5	27	57	5	5	5	5	
	5	10	10	10	28	58	5	5	5	5	
	10	10	10	10	29	59	5	5	5	5	

Additional info (include steam dissipation point)

Observer's Signature: Jon Simpson

20071107 Method 9 Inspection Form.doc

OCS Environmental, Inc.
Method 9 VE Inspection Form

Page 3 of 3

Date: 11/26/07
Source: # 4 Blast Furnace
Observation Start Time: 1100
Observation End Time: 11 PM 45
Observer's Position: SW. of B & by Stop sign
Distance to source: 300 ft
Direction to source: NE

Height of source: 63
Vertical angle to source: —

	Start	End
Emissions color:	As noted	same
Background:	Sky	
Sky Conditions:	overcast	
Wind Speed:	5	
Wind Direction:	SE	
Ambient Temp:	30	
Relative Humidity%:	90%	
Wet Bulb Temp:	—	—

Plume Type: Attached Detached None

CAST #251

Comments	0	15	30	45			0	15	30	45	Comments
Brown Tilt Spout	5	5	5	5	0	30					
Roof	5	5	5	5	1	31					
	5	5	5	5	2	32					
	5	5	5	5	3	33					
	5	10	10	10	4	34					
	10	10	10	10	5	35					
	10	10	10	10	6	36					
	10	10	10	10	7	37					
	10	10	10	10	8	38					
	10	10	10	10	9	39					
Plugged	10	10	15	15	10	40					
	10	10	5	5	11	41					
	5	5	5	5	12	42					
					13	43					
					14	44					
					15	45					
					16	46					
					17	47					
					18	48					
					19	49					
					20	50					
					21	51					
					22	52					
					23	53					
					24	54					
					25	55					
					26	56					
					27	57					
					28	58					
					29	59					

Additional info (include steam dissipation point)

Observer's Signature: Jon Dempson

20071107 Method 9 Inspection Form.doc

OCS Environmental, Inc.
Method 9 Source Layout Sketch

CAST #251

Date: 11/26/2007

Observer Name: Jon Simpson

Begin Time: 0932 Time End: 1113

No Sun Visible Times
0932, 1000, 1030, 1100

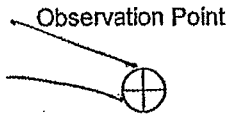

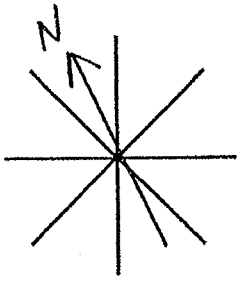

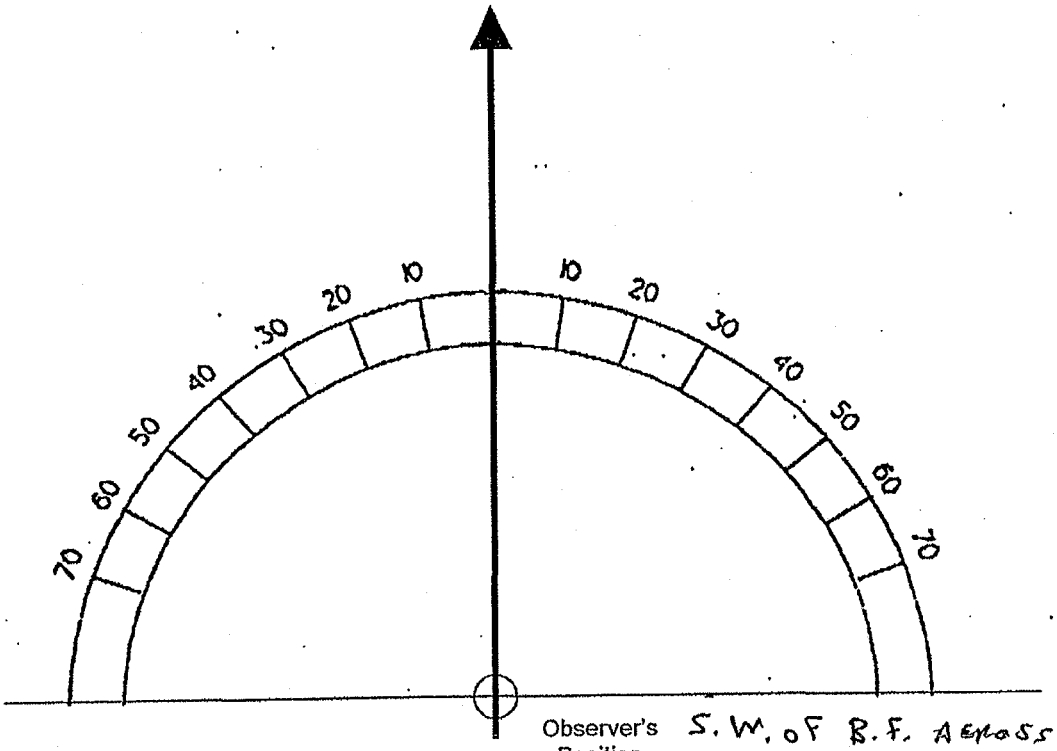

S.W. of B.F. Across street from stop sign.

Signature: Jon Simpson

20071107 Method 9 Source Layout Sketch.doc

OCS Environmental, Inc.
Method 9 VE Inspection Form

			Start	End
Date:	11-29-07			
Source:	#4BF Tilt Spout	Emissions color:	As Noted	Same
Observation Start Time:	1116	Background:	Sky	
Observation End Time:	1159	Sky Conditions:	Pt Sunny	
Observer's Position:	SW of BF By STOP sign	Wind Speed:	10-20	
Distance to source:	205 FT.	Wind Direction:	West	
Direction to source:	NE	Ambient Temp:	28°	
		Relative Humidity%:	35	
Height of source:	63'	Wet Bulb Temp:	—	
Vertical angle to source:	—			

Plume Type: (Attached) Detached None

Comments	0	15	30	45			0	15	30	45	Comments
					0	30	0	0	0	0	
					1	31	0	0	0	0	
					2	32	0	0	0	0	
					3	33	0	0	0	0	
					4	34	0	0	0	0	
					5	35	5	10	10	5	BROWN
					6	36	5	0	0	0	
					7	37	0	0	0	0	
					8	38	5	5	0	0	"
					9	39	0	0	0	0	
					10	40	0	0	0	0	
					11	41	5	0	5	0	"
					12	42	5	5	5	5	"
					13	43	0	0	0	0	
					14	44	0	0	0	0	
START					15	45	0	5	5	0	
"BAST" 284	0	0	0	0	16	46	0	0	0	0	
	0	0	0	0	17	47	0	0	0	0	
	0	0	0	0	18	48	0	0	0	0	
	0	0	0	0	19	49	0	0	0	0	
	0	0	0	0	20	50	0	0	0	0	
	0	0	0	0	21	51	0	0	5	5	"
	0	0	0	0	22	52	10	5	5	10	"
	0	0	0	0	23	53	5	10	10	5	"
BROWN	5	5	5	5	24	54	10	10	10	10	"
	5	5	5	5	25	55	5	10	0	0	
	5	5	10	5	26	56	0	5	0	0	"
	10	10	5	5	27	57	0	0	0	0	
	5	5	0	5	28	58	0	0	0	0	
	0	5	0	0	29	59	0	0	0	0	

Additional info (include steam dissipation point)

Observer's Signature: Kevin Davis

OCS Environmental, Inc.
Method 9 VE Inspection Form

			Start	End
Date:	11-29-07			
Source:	#4BF Tilt Spout	Emissions color:	As Noted	Same
Observation Start Time:	1200	Background:	Sky	
Observation End Time:	1259	Sky Conditions:	Sunny	
Observer's Position:	SW of BF, By stop sign	Wind Speed:	10-20	
Distance to source:	200ft	Wind Direction:	West	
Direction to source:	NE	Ambient Temp:	28°	
		Relative Humidity%:	35	
Height of source:	63'	Wet Bulb Temp:	–	
Vertical angle to source:	–			

Plume Type: Attached Detached None

Comments	0	15	30	45			0	15	30	45	Comments
	0	0	0	0	0	30	0	0	0	0	
	0	0	0	0	1	31	0	0	0	0	
	0	0	0	0	2	32	0	0	0	0	
	0	0	0	0	3	33	0	0	0	0	
	0	0	0	0	4	34	0	0	0	0	
	0	0	0	0	5	35	0	0	0	0	
	0	0	0	0	6	36	0	0	0	0	
	0	0	0	0	7	37	0	0	0	0	
	0	0	0	0	8	38	0	0	0	0	
Brown	0	0	5	5	9	39	0	0	0	0	
	0	0	0	0	10	40	5	10	10	5	Brown
	0	0	0	0	11	41	5	0	0	0	
	0	0	0	0	12	42	0	0	0	0	
	0	0	0	0	13	43	0	0	0	0	
	0	0	0	0	14	44	0	0	0	0	
	0	0	0	0	15	45	5	5	0	0	"
	0	0	0	0	16	46	0	5	5	5	"
	0	0	0	0	17	47	0	0	0	0	
	0	0	0	0	18	48	0	0	0	0	
	0	0	0	0	19	49	0	0	0	0	
	0	0	0	0	20	50	0	0	0	0	
	0	0	0	0	21	51	0	0	0	0	
	0	0	0	0	22	52	0	0	0	0	
	0	0	0	0	23	53	0	0	0	0	
	0	0	0	0	24	54	0	0	0	0	
	0	0	0	0	25	55	0	0	0	0	
	0	0	0	0	26	56	0	0	0	0	
	0	0	0	0	27	57	0	0	0	0	
	0	0	0	0	28	58	0	0	5	5	"
	0	0	0	0	29	59	0	0	0	0	End Cast

Additional info (include steam dissipation point)

Observer's Signature: Kevin Davis

OCS Environmental, Inc.
Method 9 Source Layout Sketch

Date: 11 / 29 / 07

Observer Name: K. Davis

Begin Time: 1116 Time End: 1259

No Sun Visible Times
1116

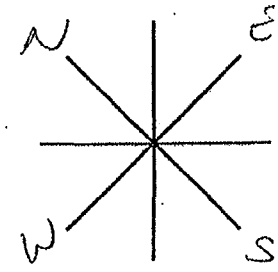

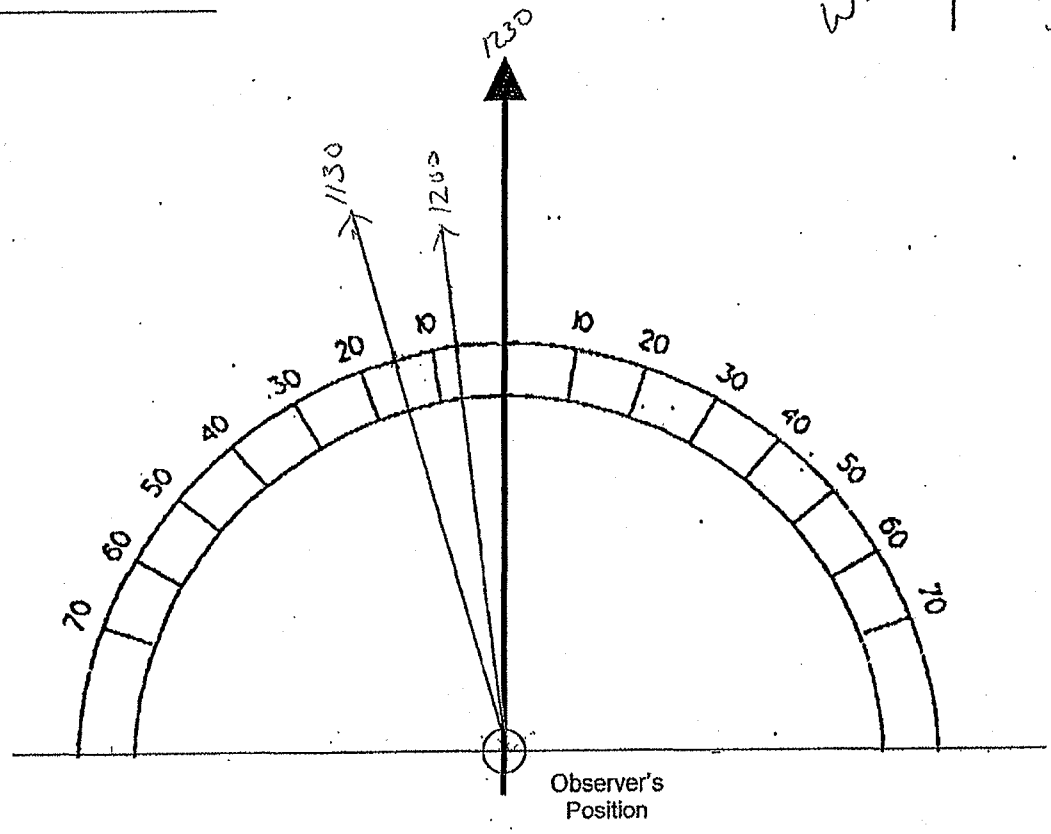

Signature: Kevin Davis

20071107 Method 9 Source Layout Sketch.doc

OCS Environmental, Inc.
Method 9 VE Inspection Form

Date: 11-29-07
Source: #4 BF Tilt Spout
Observation Start Time: 1335
Observation End Time: 1359
Observer's Position: SW of BF, Next to stop sign
Distance to source: 200 FT
Direction to source: NE

Height of source: 63'
Vertical angle to source: –

	Start	End
Emissions color:	As Noted	Same
Background:	Sky	
Sky Conditions:	Sunny	
Wind Speed:	10-20	
Wind Direction:	West	
Ambient Temp:	28°	
Relative Humidity%:	35	
Wet Bulb Temp:	–	

Plume Type: Attached Detached None

Comments	0	15	30	45			0	15	30	45	Comments
					0	30					
					1	31					
					2	32					
					3	33					
					4	34					
					5	35	0	0	0	0	START CAST #285
					6	36	0	0	0	0	
					7	37	0	0	0	0	
					8	38	0	0	0	0	
					9	39	0	0	0	0	
					10	40	0	0	0	0	
					11	41	0	0	0	0	
					12	42	0	0	0	0	
					13	43	0	0	0	0	
					14	44	0	5	5	5	Brown
					15	45	10	5	5	5	"
					16	46	5	0	0	0	"
					17	47	0	0	0	0	
					18	48	0	0	0	0	
					19	49	0	0	0	0	
					20	50	0	0	0	0	
					21	51	0	0	0	0	
					22	52	0	0	0	0	
					23	53	0	0	0	0	
					24	54	0	0	0	0	
					25	55	0	0	0	0	
					26	56	0	0	0	0	
					27	57	0	0	0	0	
					28	58	0	0	0	0	
					29	59	0	0	0	0	

Additional info (include steam dissipation point)

Observer's Signature: Kevin Davis

20071107 Method 9 Inspection Form.doc

OCS Environmental, Inc.
Method 9 VE Inspection Form

Page 2 of 2

			Start	End
Date:	11-29-07			
Source:	#4 BF Tilt Spout	Emissions color:	As Noted	Same
Observation Start Time:	1400	Background:	Sky	↓
Observation End Time:	1445	Sky Conditions:	Sunny	↓
Observer's Position:	SW of BF Next to Stop Sign	Wind Speed:	10-20	↓
Distance to source:	200 FT.	Wind Direction:	West	↓
Direction to source:	NE	Ambient Temp:	28°	↓
		Relative Humidity%:	35	↓
Height of source:	63'	Wet Bulb Temp:	-	↓
Vertical angle to source:	-			

Plume Type: Attached Detached None

Comments	0	15	30	45			0	15	30	45	Comments
	0	0	0	0	0	30	0	0	0	0	
	0	0	0	0	1	31	0	0	0	0	
Brown	0	5	10	10	2	32	0	0	0	0	
	5	10	0	0	3	33	0	0	0	0	
	0	0	0	0	4	34	0	0	0	0	
	0	0	0	0	5	35	0	0	0	0	
	0	0	0	0	6	36	0	0	0	0	
	0	0	0	0	7	37	0	0	0	0	
	0	0	0	0	8	38	0	0	0	0	
	0	0	0	0	9	39	0	0	0	0	
	0	0	0	0	10	40	0	0	0	0	
	0	0	0	0	11	41	0	0	0	0	
	0	0	0	0	12	42	0	0	0	0	
	0	0	0	0	13	43	0	0	0	0	
	0	0	0	0	14	44	0	0	0	0	
Brown	0	10	10	10	15	45	0	0	0	0	End Cast
	5	5	0	0	16	46					
	0	0	0	0	17	47					
	0	0	0	0	18	48					
	0	0	0	0	19	49					
	0	0	0	0	20	50					
	0	0	0	0	21	51					
	0	0	0	0	22	52					
	0	0	0	0	23	53					
	0	0	0	0	24	54					
	0	0	0	0	25	55					
	0	0	10	10	26	56					
	10	0	0	0	27	57					
	0	0	0	0	28	58					
	0	0	0	0	29	59					

Additional Info (include steam dissipation point)

Observer's Signature: Kevin Davis

20071107 Method 9 Inspection Form.doc

OCS Environmental, Inc.
Method 9 Source Layout Sketch

Date: 11 / 29 / 07

Observer Name: K. Davis

Begin Time: 1335 Time End: 1445

No Sun Visible Times
1430 *

* Sun Behind Bldgs. could not get sun reading.

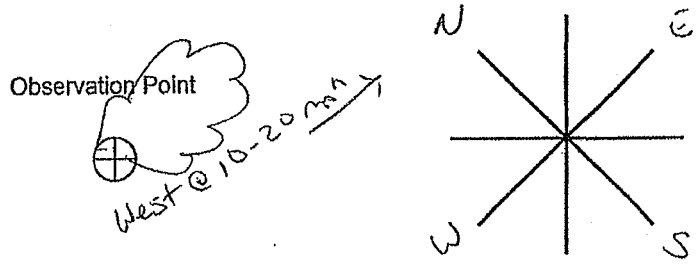

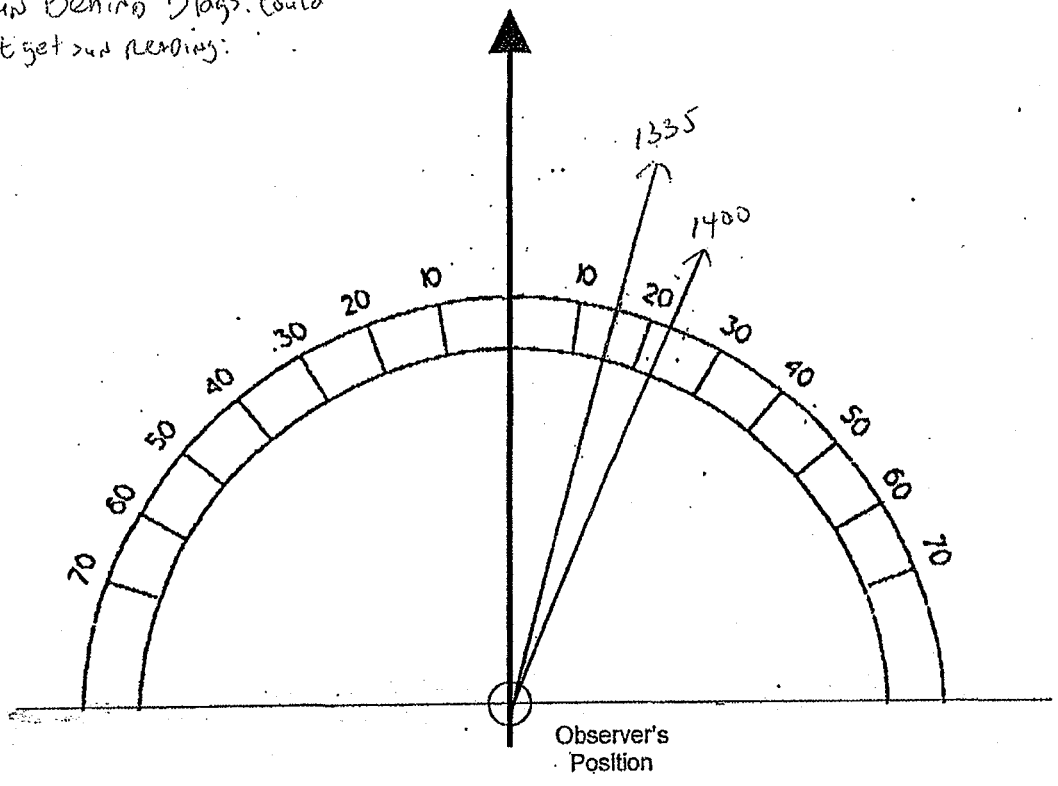

Signature: Kevin Davis

20071107 Method 9 Source Layout Sketch.doc

2 - 1

OCS Environmental, Inc.

U.S. Steel Gary Works
Emissions Inspection Summary

Date: 11, 14, 07

Start Time: 0920 (AM) / PM

End Time: 1120 (AM) / PM

No. 2 Precarbon ESP

BOP	Roof Monitor		Gas Cleaners	
QBOP	Roof Monitor		Gas Cleaners	
Blast Furnace	(4)	6	8	14
Blast Furnace Top	4	6	8	14

The following events or operations contributed to significant emissions:

Time	Heat/Cast Number	Operation	Comments
09:37:00 09:42:45	#146 Cast	Casting	21% Pm10 Total 500 Hi 60 Blk. Bad
09:43:00 09:48:45	#146 Cast	Casting	34% Pm Total 800 Hi 50 Blk. Bad
09:49:00 09:54:45	#146 Cast	Casting	15% Particulate Total 350 Hi 50 Blk. Bad

20071107 Inspection Summary.doc

OCS Environmental, Inc.
Method 9 VE Inspection Form

Page 1 of 3

			Start	End
Date:	11/14/07	Emissions color:	Black	Same
Source:	#4 Boiler CM Stack	Background:	Sky	
Observation Start Time:	0920 A	Sky Conditions:	Cloy	
Observation End Time:	1000 A	Wind Speed:	5	
Observer's Position:	Roof	Wind Direction:	W	
Distance to source:	320 yds	Ambient Temp:	60	
Direction to source:	NW 320°	Relative Humidity%:	90	
		Wet Bulb Temp:	–	
Height of source:	54 ft			
Vertical angle to source:	5°			

Plume Type: Attached Detached None

Comments	0	15	30	45			0	15	30	45	Comments	
					0	30	0	0	0	0		
					1	31	0	0	0	0		
					2	32	0	0	0	0		
					3	33	0	0	0	0		
					4	34	0	0	0	0		
					5	35	0	0	0	0		
					6	36	0	0	0	0		
					7	37	0	0	0	0		
					8	38	0	0	0	0		
					9	39	0	0	60	40	100	Blk Gas
					10	40	60	50	50	20	180	✓
					11	41	20	30	40	20	110	✓
					12	42	10	40	30	30	110	✓
					13	43	40	30	20	20	110	✓
					14	44	30	40	50	40	160	✓
					15	45	20	40	30	40	140	✓
					16	46	20	50	20	20	140	✓
					17	47	40	50	30	20	140	✓
					18	48	30	30	20	40	120	✓
					19	49	50	40	20	20	140	✓
Begin Observation	0	0	0	0	20	50	20	20	10	20	70	✓
CMS #1 Gas Burners	0	0	0	0	21	51	20	10	10	10	50	✓
	0	0	0	0	22	52	10	10	10	10	40	✓
	0	0	0	0	23	53	10	5	5	10	30	✓
	0	0	0	0	24	54	5	5	5	5	20	✓
	0	0	0	0	25	55	5	5	5	5	20	✓
	0	0	0	0	26	56	0	0	0	0		
	0	0	0	0	27	57	0	0	0	0		
	0	0	0	0	28	58	0	0	0	0		
	0	0	0	0	29	59	0	0	0	0		

Additional info (include steam dissipation point)

Observer's Signature

20071107 Method 9 Inspection Form.doc

OCS Environmental, Inc.
Method 9 VE Inspection Form

Page 2 of 3

			Start	End
Date:	11/14/07	Emissions color:	As Dark	Same
Source:	HEBF Cm+Shed	Background:	Sky	
Observation Start Time:	10WA	Sky Conditions:	Clear	
Observation End Time:	11WA	Wind Speed:	5	
Observer's Position:	ABF1	Wind Direction:	W	
Distance to source:	320 yds	Ambient Temp:	60°	
Direction to source:	NW 320°	Relative Humidity%:	20 %	
Height of source:	45 ft	Wet Bulb Temp:	—	
Vertical angle to source:	5°			

Plume Type: (Attached) Detached None

Comments	0	15	30	45			0	15	30	45	Comments
# Mk Gas Out	0	0	0	0	0	30	0	0	0	0	
	0	0	0	0	1	31	0	0	0	0	
	0	0	0	0	2	32	0	0	0	0	
	0	0	0	0	3	33	0	0	0	0	
	0	0	0	0	4	34	0	0	0	0	
	0	0	0	0	5	35	0	0	0	0	
	0	0	0	0	6	36	0	0	0	0	
Black-Bs 40	10	10	10	10	7	37	0	0	0	0	
0	0	0	0	0	8	38	0	0	0	0	
✓ 10	5	5	0	0	9	39	0	0	0	0	
✓ 5	5	0	0	0	10	40	0	0	0	0	
0	0	0	0	0	11	41	0	0	0	0	
Black Pluk 75	60	10	5	0	12	42	0	0	0	0	
End Gas	0	0	0	0	13	43	0	0	0	0	
	0	0	0	0	14	44	0	0	0	0	
	0	0	0	0	15	45	0	0	0	0	
	0	0	0	0	16	46	0	0	0	0	
	0	0	0	0	17	47	0	0	0	0	
	0	0	0	0	18	48	0	0	0	0	
	0	0	0	0	19	49	0	0	0	0	
	0	0	0	0	20	50	0	0	0	0	
	0	0	0	0	21	51	0	0	0	0	
	0	0	0	0	22	52	0	0	0	0	
	0	0	0	0	23	53	0	0	0	0	
	0	0	0	0	24	54	0	0	0	0	
	0	0	0	0	25	55	0	0	0	0	
	0	0	0	0	26	56	0	0	0	0	
	0	0	0	0	27	57	0	0	0	0	
	0	0	0	0	28	58	0	0	0	0	Drill up
	0	0	0	0	29	59	0	0	0	0	

Additional info (include steam dissipation point)

Observer's Signature

20071107 Method 9 Inspection Form.doc

OCS Environmental, Inc.
Method 9 VE Inspection Form

Page 3 of 3

			Start	End
Date:	11/14/07	Emissions color:	AS Solid	Same
Source:	#4 BF Rm + Shell	Background:	Sky	
Observation Start Time:	1100 A	Sky Conditions:	Clay	
Observation End Time:	1119 59 A	Wind Speed:	5	
Observer's Position:	4 BFI	Wind Direction:	W	
Distance to source:	320 YDS	Ambient Temp:	60°	
Direction to source:	NW 320°	Relative Humidity%:	80 %	
Height of source:	59 ft	Wet Bulb Temp:	–	
Vertical angle to source:	5°			

Plume Type: Attached Detached None

Comments	0	15	30	45			0	15	30	45	Comments
	0	0	0	0	0	30					
	0	0	0	0	1	31					
Cust # 147	0	0	0	0	2	32					
	0	0	0	0	3	33					
	0	0	0	0	4	34					
	0	0	0	0	5	35					
	0	0	0	0	6	36					
	0	0	0	0	7	37					
	0	0	0	0	8	38					
	0	0	0	0	9	39					
	0	0	0	0	10	40					
	0	0	0	0	11	41					
	0	0	0	0	12	42					
	0	0	0	0	13	43					
	0	0	0	0	14	44					
	0	0	0	0	15	45					
	0	0	0	0	16	46					
	0	0	0	0	17	47					
	0	0	0	0	18	48					
	0	0	0	0	19	49					
End Observation 11 19 59 A	X	X	X	✓	20	50					
					21	51					
					22	52					
					23	53					
					24	54					
					25	55					
					26	56					
					27	57					
					28	58					
					29	59					

Additional info (include steam dissipation point)

Observer's Signature

20071107 Method 9 Inspection Form.doc

OCS Environmental, Inc.
Method 9 Source Layout Sketch

Date: 11 / 14 / 07

Observer Name: T. SMITH

Begin Time: 0920A

Time End: 11 15 59 Am

No Sun Visible Times

Observation Point

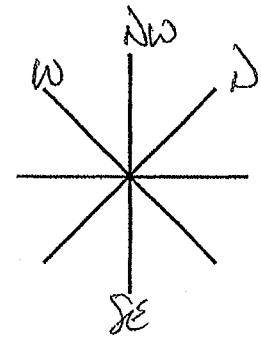

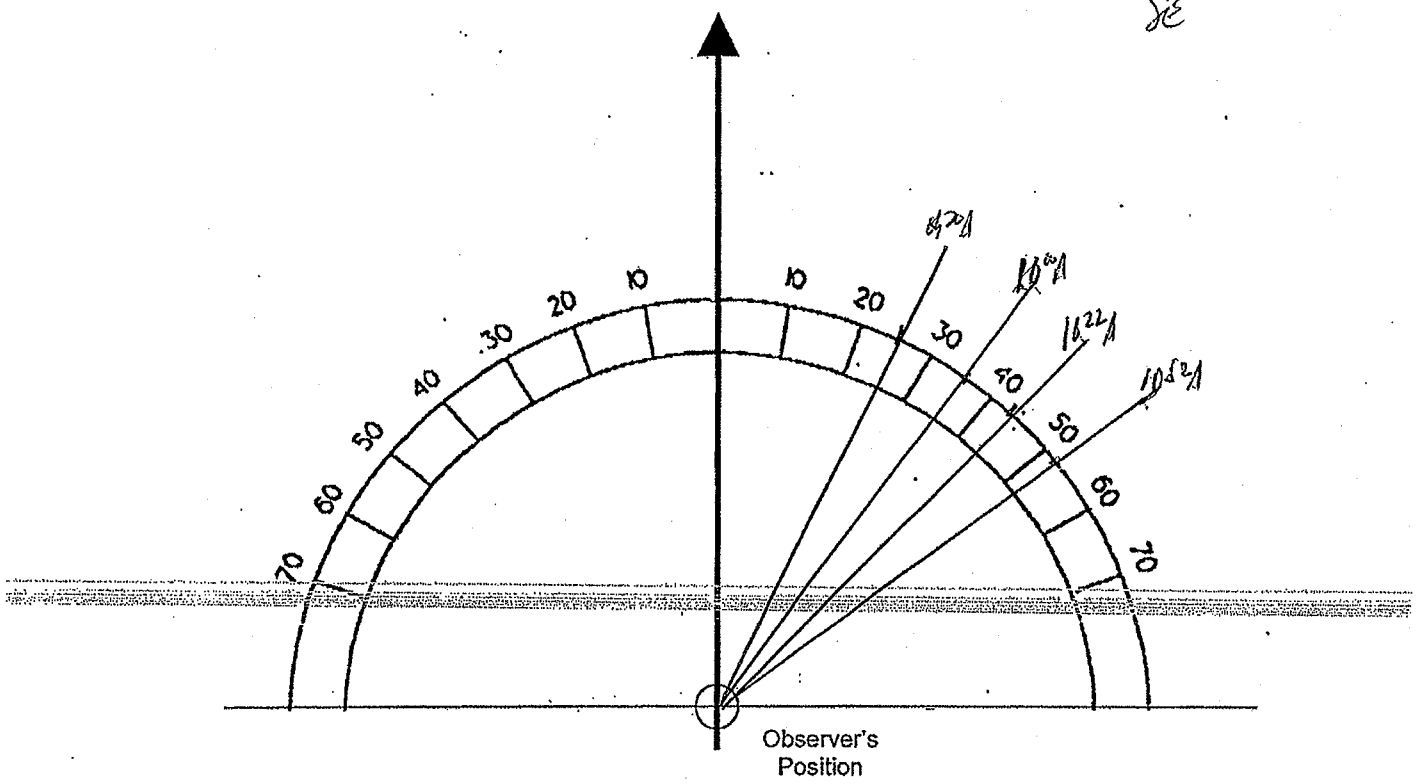

Signature:

20071107 Method 9 Source Layout Sketch.doc

EPA-USS-0330063

U.S. Steel Gary Works
No. 4 Blast Furnace
Emissions Observations Checklist

Observer	R. MACKEY	Clay Type	RUR	Date	11-14-07
Start time	IN PROGRESS			Cast Number	146
End Time	1012	Begin		Cast Tonage	565
Furnace Mgr		End		Iron Temp	2644
		Pushed	1.5	Gas Pressure	55

Mud Gun	Yes	No
Problems Plugging Hole?	☐	☑
Clay Leaking into trough?	☐	☑

Tap Drill		
Problems Opening Hole?	☐ N/A	☐
Oxygen Lance Used?	☐	☐

Sub Car Number

Ladle Condition

	Bright Red	Faintly Glowing	Black	Build Up	Smokey
#1	☐	☐	☐	☐	☐
#2	☐	☐	☐	☐	☐
#3	☐	☐	☐	☐	☐
#4	☐	☐	☐	☐	☐
#5	☐	☐	☐	☐	☐
#6	☐	☐	☐	☐	☐
#7	☐	☐	☐	☐	☐

Comments

2 PM 10's EMISSIONS FROM TILT SPOUT. COLD LADLE

Date Corrected

Area Blast Furnace Manager

Environmental Manager

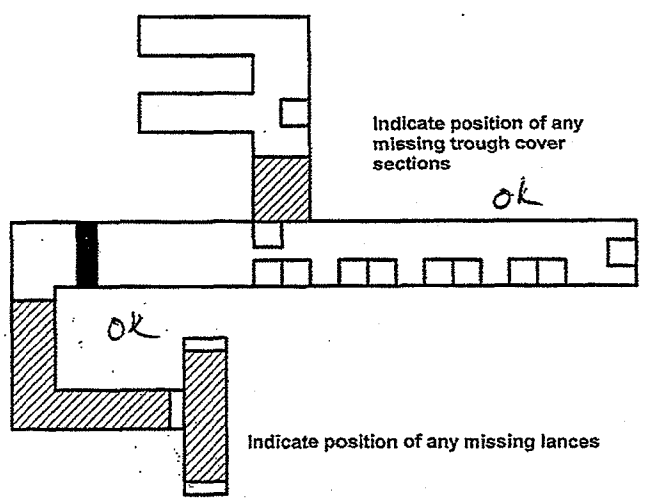

20071107 4BF Inspection Checklist.doc

EPA-R5-2012-0005960000326

EPA-USS-0330064

U.S. Steel Gary Works
No. 4 Blast Furnace
Emissions Observations Checklist

Observer	Rick Mackey
Start time	1102
End Time	IN PROGRESS
Furnace Mgr	

Clay Type	RVR
Begin	
End	
Pushed	N/A

Date	11-14-07
Cast Number	147
Cast Tonage	N/A
Iron Temp	2636
Gas Pressure	65

Mud Gun	Yes	No
Problems Plugging Hole?	☐ N/A	☐
Clay Leaking into trough?	☐	☐

Tap Drill		
Problems Opening Hole?	☐	☑
Oxygen Lance Used?	☐	☑

Sub Car Number

Ladle Condition

	Bright Red	Faintly Glowing	Black	Build Up	Smokey
#1	☐	☐	☐	☐	☐
#2	☐	☐	☐	☐	☐
#3	☐	☐	☐	☐	☐
#4	☐	☐	☐	☐	☐
#5	☐	☐	☐	☐	☐
#6	☐	☐	☐	☐	☐
#7	☐	☐	☐	☐	☐

Comments
Date Corrected
Area Blast Furnace Manager
Environmental Manager

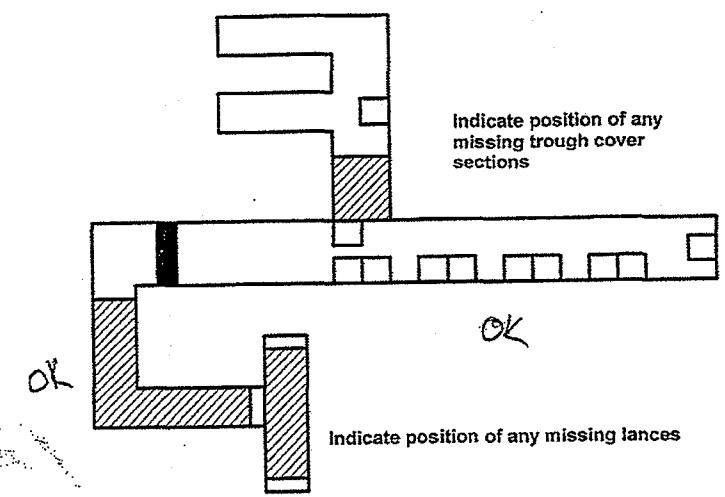

20071107 4BF Inspection Checklist.doc

EPA-R5-2012-0005960000326

2-2

OCS Environmental, Inc.

U.S. Steel Gary Works
Emissions Inspection Summary

Date: 11 / 12 / 07

Start Time: 11:17 AM / PM

End Time: 13:17 AM / PM

No. 2 Precarbon ESP

BOP	Roof Monitor		Gas Cleaners	
QBOP	Roof Monitor		Gas Cleaners	
Blast Furnace	4	6	8	14
Blast Furnace Top	4	6	8	14

The following events or operations contributed to significant emissions:

Time	Heat/Cast Number	Operation	Comments
No Incidents To Report			

20071107 Inspection Summary.doc

OCS Environmental, Inc.
Method 9 VE Inspection Form

Page 1 of 3

Date: 11/12/07
Source: #4 BF Rm+Slice
Observation Start Time: 1117 A
Observation End Time: 11-59-45 A
Observer's Position: 4 BF 1
Distance to source: 320 YDS
Direction to source: NW 320 °

Height of source: 59 ft
Vertical angle to source: 5°

	Start	End
Emissions color:	As Total	Same
Background:	Sky	
Sky Conditions:	Cloudy	
Wind Speed:	8	
Wind Direction:	SW	
Ambient Temp:	60°	
Relative Humidity%:	90%	
Wet Bulb Temp:		

Plume Type: Attached Detached None

Comments	0	15	30	45			0	15	30	45	Comments
					0	30	0	0	0	0	
					1	31	0	0	10	10	20 Black Drillup
					2	32	10	5	5	40	60 ✓
					3	33	10	5	20	30	65 ✓ Bro
					4	34	40	25	10	20	95 240 ✓
					5	35	20	20	10	0	50 290 ✓ Gas #127
					6	36	0	0	0	0	
					7	37	0	0	0	0	
					8	38	0	0	0	0	
					9	39	0	0	0	0	
					10	40	0	0	0	0	
					11	41	0	0	0	0	
					12	42	0	0	0	0	
					13	43	0	0	0	0	
					14	44	0	0	0	0	
					15	45	0	0	0	0	
11:17 A					16	46	0	0	0	0	
Begin Observation	0	0	0	0	17	47	0	0	0	0	
	0	0	0	0	18	48	0	0	0	0	
	0	0	0	0	19	49	0	0	0	0	
	0	0	0	0	20	50	0	0	0	0	
	0	0	0	0	21	51	0	0	0	0	
	0	0	0	0	22	52	0	0	0	0	
	0	0	0	0	23	53	0	0	0	0	
	0	0	0	0	24	54	0	0	0	0	
	0	0	0	0	25	55	0	0	0	0	
	0	0	0	0	26	56	0	0	0	0	
	0	0	0	0	27	57	0	0	0	0	
	0	0	0	0	28	58	0	0	0	0	
	0	0	0	0	29	59	0	0	0	0	

290 / Total 12.1%

Additional info (include steam dissipation point)

Observer's Signature

20071107 Method 9 Inspection Form.doc

OCS Environmental, Inc.
Method 9 VE Inspection Form

Date: 11/12/07
Source: #4 BF GM+Shell
Observation Start Time: 12:00 P
Observation End Time: 12:59:45 P
Observer's Position: 4 BF 1
Distance to source: 320 YDS
Direction to source: NW320 °

Height of source: 59 ft
Vertical angle to source: 5 °

	Start	End
Emissions color:	As Noted	Same
Background:	Sky	
Sky Conditions:	CCPY	
Wind Speed:	8	
Wind Direction:	SW	
Ambient Temp:	60°	
Relative Humidity%:	90	
Wet Bulb Temp:		

Plume Type: Attached Detached None

Comments	0	15	30	45			0	15	30	45	Comments
	0	0	0	0	0	30	0	0	0	0	
	0	0	0	0	1	31	0	0	0	0	
	0	0	0	0	2	32	0	0	0	0	
	0	0	0	0	3	33	0	0	0	0	
	0	0	0	0	4	34	0	0	0	0	
	0	0	0	0	5	35	0	0	0	0	
	0	0	0	0	6	36	0	0	0	0	
	0	0	0	0	7	37	0	0	0	0	
	0	0	0	0	8	38	0	0	0	0	
	0	0	0	0	9	39	0	0	0	0	
	0	0	0	0	10	40	0	0	0	0	
	0	0	0	0	11	41	0	0	0	5	5 Lite Bn SHELL
	0	0	0	0	12	42	5	0	5	0	10 15 ✓
	0	0	0	0	13	43	0	0	0	0	0 15
	0	0	0	0	14	44	0	5	5	0	10 25 ✓
	0	0	0	0	15	45	5	5	0	0	10 35 ✓
	0	0	0	0	16	46	0	0	5	5	10 45 ✓
	0	0	0	0	17	47	0	0	0	0	0 45
	0	0	0	0	18	48	0	0	5	0	5 50 ✓
	0	0	0	0	19	49	0	0	5	0	5 55 ✓
	0	0	0	0	20	50	0	5	0	5	10 65 ✓
	0	0	0	0	21	51	0	0	0	0	0 65
	0	0	0	0	22	52	0	0	5	0	5 70 ✓
	0	0	0	0	23	53	0	0	0	0	
	0	0	0	0	24	54	0	0	0	0	
	0	0	0	0	25	55	5	0	0	0	5 ✓
	0	0	0	0	26	56	0	0	0	5	10 ✓
	0	0	0	0	27	57	0	0	0	0	
	0	0	0	0	28	58	0	0	0	0	
	0	0	0	0	29	59	0	0	0	0	

Additional info (include steam dissipation point)

Observer's Signature

20071107 Method 9 Inspection Form.doc

OCS Environmental, Inc.
Method 9 VE Inspection Form

Date: 11/12/07
Source: HYBF Rail Shell
Observation Start Time: 13:00 P
Observation End Time: 13-16-45 P
Observer's Position: 4BF1
Distance to source: 320 YDS
Direction to source: NW 320°

Height of source: 59 ft
Vertical angle to source: 5°

	Start	End
Emissions color:	As Void	Same
Background:	Sky	
Sky Conditions:	Clay	
Wind Speed:	8	
Wind Direction:	SW	
Ambient Temp:	60°	
Relative Humidity%:	90%	
Wet Bulb Temp:	-	

Plume Type: Attached Detached None

Comments	0	15	30	45			0	15	30	45	Comments
	0	0	0	0	0	30					
	0	0	0	0	1	31					
	0	0	0	0	2	32					
Lite Pin 5	0	0	5	0	3	33					
✓ 15	0	0	10	0	4	34					
	0	0	0	0	5	35					
✓ 20	0	5	0	0	6	36					
✓ 30	5	5	0	0	7	37					
	0	0	0	0	8	38					
✓ 40	5	0	0	5	9	39					
	0	0	0	0	10	40					
✓ 50	0	0	10	0	11	41					
✓ 55	0	0	0	5	12	42					
	0	0	0	0	13	43					
	0	0	0	0	14	44					
	0	0	0	0	15	45					
	0	0	0	0	16	46					
End Observation	X	X	X	X	17	47					
13-16-45 P					18	48					
11-12-07					19	49					
					20	50					
					21	51					
					22	52					
					23	53					
					24	54					
					25	55					
					26	56					
					27	57					
					28	58					
					29	59					

Additional info (include steam dissipation point)

Observer's Signature

20071107 Method 9 Inspection Form.doc

OCS Environmental, Inc.
Method 9 Source Layout Sketch

Date: 11 1 07

Observer Name: T. SMITH

Begin Time: 11:17A

Time End: 13-16-45 Pm

No Sun Visible Times
11:17A
11:47A
12:17P
12:47P

Observation Point

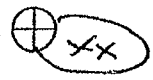

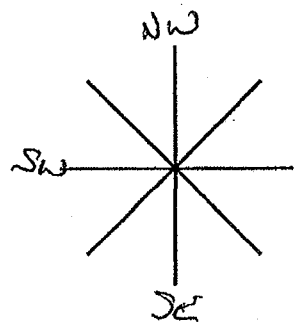

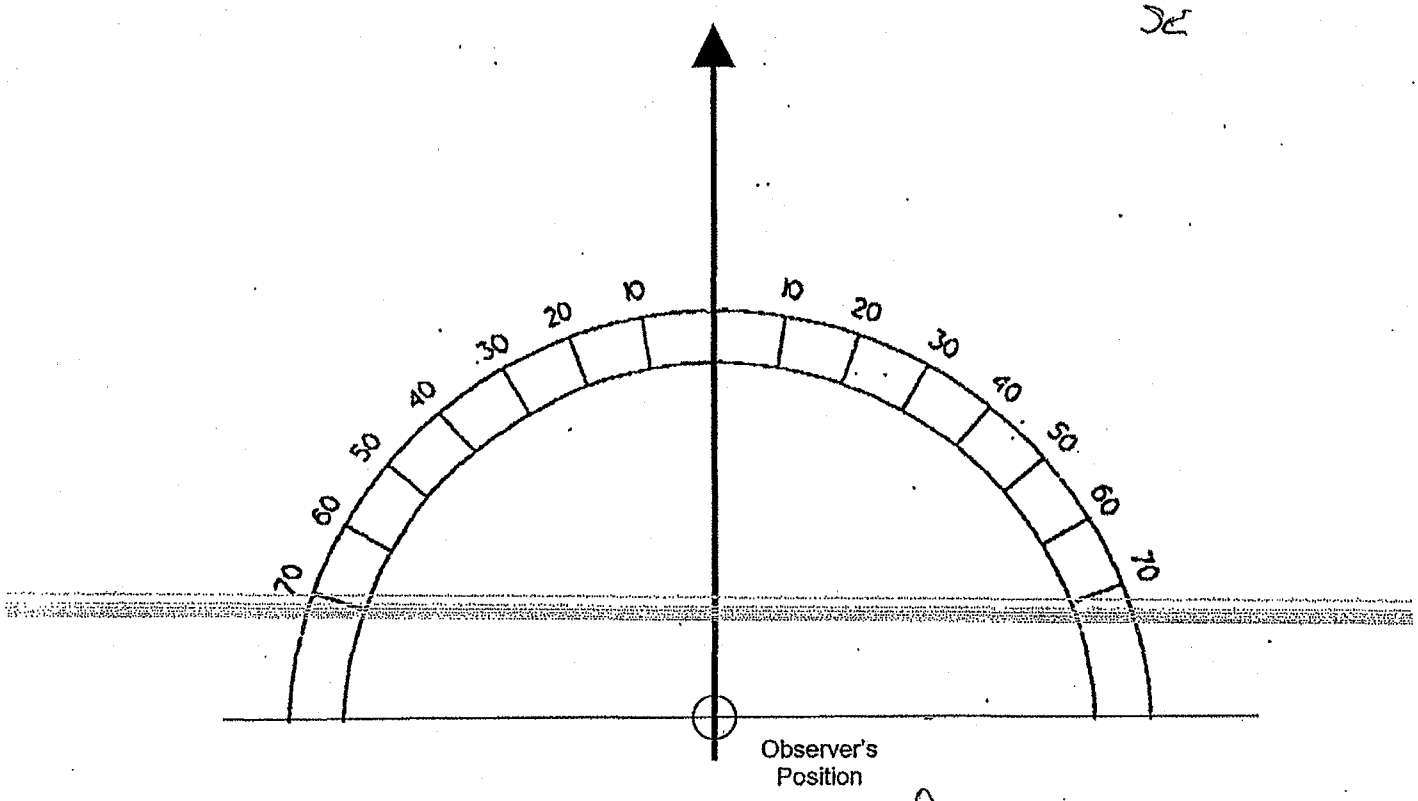

Signature:

20071107 Method 9 Source Layout Sketch.doc

EPA-USS-0330070

U.S. Steel Gary Works
No. 4 Blast Furnace
Emissions Observations Checklist

Observer	RICK MACKEY
Start time	1132
End Time	1317
Furnace Mgr	

Clay Type	RVR
Begin	
End	
Pushed	N/A

Date	11-12-07
Cast Number	127
Cast Tonage	N/A
Iron Temp	2642
Gas Pressure	10

Mud Gun	Yes	No
Problems Plugging Hole?	☐ N/A	☐
Clay Leaking into trough?	☐	☐
Tap Drill		
Problems Opening Hole?	☐	☑
Oxygen Lance Used?	☐	☑

Sub Car Number

	Bright Red	Faintly Glowing	Black	Build Up	Smokey
#1	☐	☐	☐	☐	☐
#2	☐	☐	☐	☐	☐
#3	☐	☐	☐	☐	☐
#4	☐	☐	☐	☐	☐
#5	☐	☐	☐	☐	☐
#6	☐	☐	☐	☐	☐
#7	☐	☐	☐	☐	☐

Ladle Condition

Comments

Date Corrected

Area Blast Furnace Manager

Environmental Manager

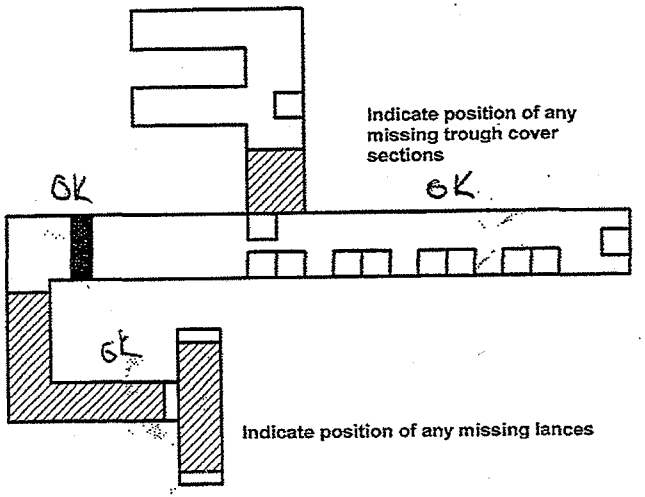

20071107 4BF Inspection Checklist.doc

EPA-R5-2012-0005960000326

2 — 3

OCS Environmental, Inc.

U.S. Steel Gary Works
Emissions Inspection Summary

Date: 12/04/2007

Start Time: 1130 AM / PM

End Time: 1330 AM / PM

No. 2 Precarbon ESP

BOP	Roof Monitor		Gas Cleaners	
QBOP	Roof Monitor		Gas Cleaners	
Blast Furnace	4	6	8	14
Blast Furnace Top	4	6	8	14

The following events or operations contributed to significant emissions:

Time	Heat/Cast Number	Operation	Comments

Jon Simpson

20071107 Inspection Summary.doc

OCS Environmental, Inc.
Method 9 VE Inspection Form

Page 1 of 3

			Start	End
Date:	12/04/07	Emissions color:	As Noted	Same
Source:	4 Blast Furnace	Background:	Sky	
Observation Start Time:	11:30	Sky Conditions:	Overcast	
Observation End Time:	11:59:45	Wind Speed:	5-10	
Observer's Position:	4BF5	Wind Direction:	North	
Distance to source:	92 yards	Ambient Temp:	35°	
Direction to source:	NE 220°	Relative Humidity%:	70%	
		Wet Bulb Temp:	—	—
Height of source:	63'			
Vertical angle to source:	9°			

Plume Type: Attached Detached None

Comments	0	15	30	45			0	15	30	45	Comments
					0	30	0	0	0	0	CAST = 334
					1	31	0	0	0	0	in progress
					2	32	0	0	0	0	
					3	33	0	0	0	0	
					4	34	0	0	0	0	
					5	35	0	0	0	0	
					6	36	0	0	0	0	
					7	37	0	0	0	0	
					8	38	0	0	0	0	
					9	39	0	0	0	0	
					10	40	0	0	0	0	
					11	41	0	0	0	0	
					12	42	0	0	0	0	
					13	43	0	0	0	0	
					14	44	0	0	0	0	
					15	45	10	10	45	30	Black - shell
					16	46	75	50	30	30	
					17	47	30	15	10	10	
					18	48	5	5	5	0	
					19	49	0	0	0	0	
					20	50	0	0	0	0	
					21	51	0	0	0	0	
					22	52	0	0	0	0	
					23	53	0	0	0	0	
					24	54	0	0	0	0	
					25	55	0	0	0	0	
					26	56	0	0	0	0	
					27	57	0	0	0	0	
					28	58	0	0	0	0	
					29	59	0	0	0	0	

Additional info (include steam dissipation point)

Observer's Signature: Jon Simpson

20071107 Method 9 Inspection Form.doc

OCS Environmental, Inc.
Method 9 VE Inspection Form

Date: 12/04/07
Source: 4 BLAST FURNACE
Observation Start Time: 1200
Observation End Time: 1259 pm
Observer's Position: 485 5
Distance to source: 92 yds
Direction to source: NE 22°

Height of source: 63'
Vertical angle to source: 9°

	Start	End
Emissions color:	AS NOTED	SAME
Background:	SKY	
Sky Conditions:	OVERCAST	
Wind Speed:	5-10	
Wind Direction:	NORTH	
Ambient Temp:	35°	
Relative Humidity%:	70%	
Wet Bulb Temp:	—	—

Plume Type: Attached Detached None

Comments	0	15	30	45			0	15	30	45	Comments
	0	0	0	0	0	30	0	0	0	0	
	0	0	0	0	1	31	0	0	0	0	
	0	0	0	0	2	32	0	0	0	0	
	0	0	0	0	3	33	0	0	0	0	
	0	0	0	0	4	34	0	0	0	0	
	0	0	0	0	5	35	0	0	0	0	
	0	0	0	0	6	36	0	0	0	0	
	0	0	0	0	7	37	0	0	0	0	
	0	0	0	0	8	38	0	0	0	0	
	0	0	0	0	9	39	0	0	0	0	
	0	0	0	0	10	40	0	0	0	0	
	0	0	0	0	11	41	0	0	0	0	
	0	0	0	0	12	42	0	0	0	0	
	0	0	0	0	13	43	0	0	0	0	
	0	0	0	0	14	44	0	0	0	0	
	0	0	0	0	15	45	0	0	0	0	
	0	0	0	0	16	46	0	0	0	0	
	0	0	0	0	17	47	0	0	0	0	
	0	0	0	0	18	48	0	0	0	0	
	0	0	0	0	19	49	0	0	0	0	
	0	0	0	0	20	50	0	0	0	0	
	0	0	0	0	21	51	0	0	0	0	
	0	0	0	0	22	52	0	0	0	0	
CART# 335	0	0	0	0	23	53	0	0	0	0	
Drill up	0	0	0	0	24	54	0	0	0	0	
H.M.F.	0	0	0	0	25	55	0	0	0	0	
	0	0	0	0	26	56	0	0	0	0	
	0	0	0	0	27	57	0	0	0	0	
	0	0	0	0	28	58	0	0	0	0	
	0	0	0	0	29	59	0	0	0	0	

Additional info (include steam dissipation point)

Observer's Signature: Jon Simpson

20071107 Method 9 Inspection Form.doc

OCS Environmental, Inc.
Method 9 VE Inspection Form

Page 3 of 3

Date:	12/04/07
Source:	4 BLAST FURNACE
Observation Start Time:	1300
Observation End Time:	132945
Observer's Position:	4BF5
Distance to source:	92 yards
Direction to source:	NE 22°
Height of source:	63'
Vertical angle to source:	9°

	Start	End
Emissions color:	As Noted	Same
Background:	Sky	
Sky Conditions:	Overcast	
Wind Speed:	5-10	
Wind Direction:	North	
Ambient Temp:	35°	
Relative Humidity%:	70%	
Wet Bulb Temp:	—	—

Plume Type: Attached Detached None

Comments	0	15	30	45			0	15	30	45	Comments
	0	0	0	0	0	30					
	0	0	0	0	1	31					
	0	0	0	0	2	32					
	0	0	0	0	3	33					
	0	0	0	0	4	34					
	0	0	0	0	5	35					
	0	0	0	0	6	36					
	0	0	0	0	7	37					
	0	0	0	0	8	38					
	0	0	0	0	9	39					
	0	0	0	0	10	40					
	0	0	0	0	11	41					
	0	0	0	0	12	42					
	0	0	0	0	13	43					
	0	0	0	0	14	44					
	0	0	0	0	15	45					
	0	0	0	0	16	46					
	0	0	0	0	17	47					
	0	0	0	0	18	48					
	0	0	0	0	19	49					
	0	0	0	0	20	50					
	0	0	0	0	21	51					
	0	0	0	0	22	52					
	0	0	0	0	23	53					
	0	0	0	0	24	54					
	0	0	0	0	25	55					
	0	0	0	0	26	56					
	0	0	0	0	27	57					
	0	0	0	0	28	58					
	0	0	0	0	29	59					

Additional info (include steam dissipation point)

Observer's Signature: Jon Simpson

20071107 Method 9 Inspection Form.doc

OCS Environmental, Inc.
Method 9 Source Layout Sketch

Date: 12/04/2007
Observer Name: Jon Simpson
Begin Time: 1130 Time End: 1330

No Sun Visible Times
1130, 1200, 1230, 1300,

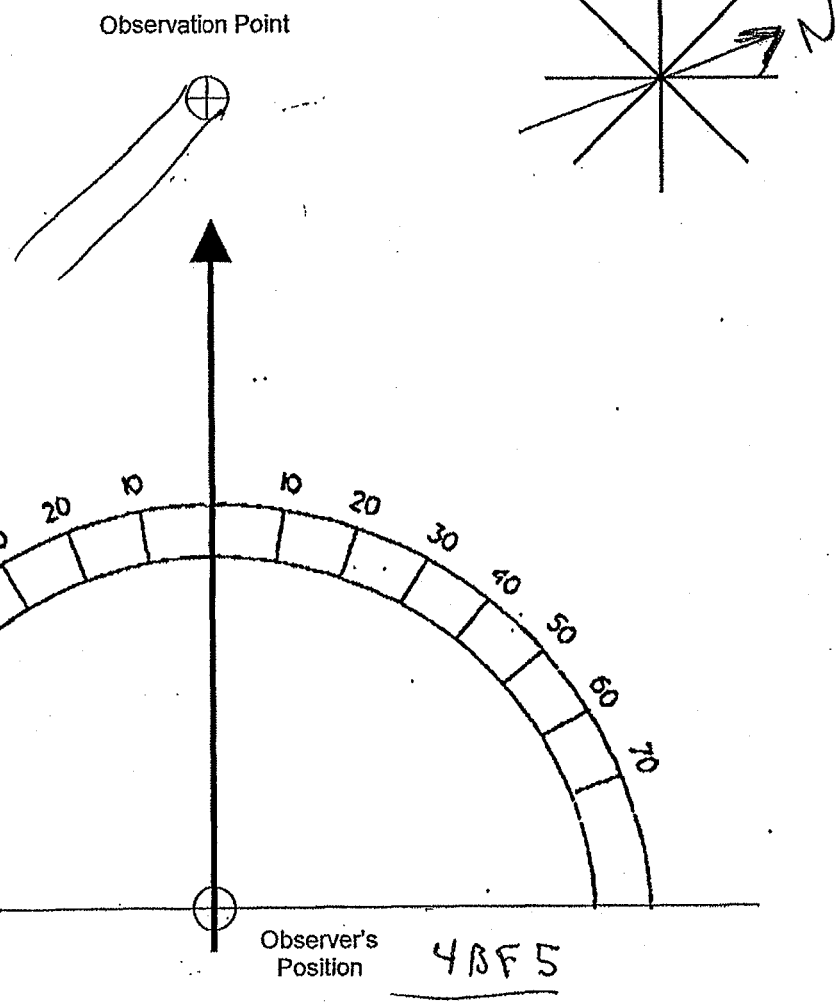

Signature: Jon Simpson

20071107 Method 9 Source Layout Sketch.doc

3-2

OCS Environmental, Inc.

U.S. Steel Gary Works
Emissions Inspection Summary

Date: 11/21/07

Start Time: 09/5 00 AM / PM

End Time: 11/0 45 AM / PM

No. 2 Precarbon ESP

BOP	Roof Monitor		Gas Cleaners	
QBOP	Roof Monitor		Gas Cleaners	
Blast Furnace	4	6	8	14
Blast Furnace Top	4	6	8	14

The following events or operations contributed to significant emissions:

Time	Heat/Cast Number	Operation	Comments

20071107 Inspection Summary.doc

OCS Environmental, Inc.
Method 9 VE Inspection Form

Page 1 of 3

			Start	End
Date:	11-21-07	Emissions color:	AS NOTED	
Source:	#9 BF	Background:	SKY	SAME
Observation Start Time:	0915 00	Sky Conditions:	OC RAINY	
Observation End Time:	0959 45	Wind Speed:	10-15	
Observer's Position:	NW OF SOURCE	Wind Direction:	NE	
Distance to source:	60 YDS	Ambient Temp:	46°	
Direction to source:	SE	Relative Humidity%:	100%	
		Wet Bulb Temp:		
Height of source:	59'			
Vertical angle to source:				

Plume Type: Attached Detached None

Comments	0	15	30	45			0	15	30	45	Comments
					0	30	0	0	0	0	
					1	31	0	0	0	0	
					2	32	0	0	0	0	
					3	33	0	0	0	0	
					4	34	0	0	0	0	
					5	35	0	0	0	0	
					6	36	0	0	0	0	
					7	37	0	0	0	0	
					8	38	0	0	0	0	
					9	39	0	0	0	0	
					10	40	0	0	0	0	
					11	41	0	0	0	0	
					12	42	0	0	0	0	
					13	43	0	0	0	0	
CAST					14	44	0	0	0	0	
# 3248	0	0	0	0	15	45	0	0	0	0	
	0	0	0	0	16	46	0	0	0	0	
	0	0	0	0	17	47	0	0	0	0	
	0	0	0	0	18	48	0	0	0	0	
	0	0	0	0	19	49	0	0	0	0	
	0	0	0	0	20	50	0	0	0	0	
	0	0	0	0	21	51	0	0	0	0	
	0	0	0	0	22	52	0	0	0	0	
	0	0	0	0	23	53	0	0	0	0	
	0	0	0	0	24	54	0	0	0	0	
	0	0	0	0	25	55	0	0	0	0	
	0	0	0	0	26	56	0	0	0	0	
	0	0	0	0	27	57	0	0	0	0	
	0	0	0	0	28	58	0	0	0	0	
	0	0	0	0	29	59	0	0	0	0	

Additional info (include steam dissipation point)

Observer's Signature

J. Johnson

20071107 Method 9 Inspection Form.doc

OCS Environmental, Inc.
Method 9 VE Inspection Form

Date: 11-21-07
Source: #8 BF
Observation Start Time: 1000 00
Observation End Time: 1059 00
Observer's Position: NW OF SOURCE
Distance to source: 60 YDS
Direction to source: SE

Height of source: 59'
Vertical angle to source:

	Start	End
Emissions color:	AS NOTED	SAME
Background:	-	
Sky Conditions:	OC RA	
Wind Speed:	10-15	
Wind Direction:	NE	
Ambient Temp:	46°	
Relative Humidity%:	100%	
Wet Bulb Temp:		

Plume Type: Attached Detached None

Comments	0	15	30	45			0	15	30	45	Comments
	0	0	0	0	0	30	0	0	0	0	
	0	0	0	0	1	31	0	0	0	0	
	0	0	0	0	2	32	0	0	0	0	
	0	0	0	0	3	33	0	0	0	0	
	0	0	0	0	4	34	0	0	0	0	
	0	0	0	0	5	35	0	0	0	0	
	0	0	0	0	6	36	0	0	0	0	
	0	0	0	0	7	37	0	0	0	0	
	0	0	0	0	8	38	0	0	0	0	
	0	0	0	0	9	39	0	0	0	0	
	0	0	0	0	10	40	0	0	0	0	
	0	0	0	0	11	41	0	0	0	0	
	0	0	0	0	12	42	0	0	0	0	
	0	0	0	0	13	43	0	0	0	0	
	0	0	0	0	14	44	0	0	0	0	
	0	0	0	0	15	45	0	0	0	0	
	0	0	0	0	16	46	0	0	0	0	
	0	0	0	0	17	47	0	0	0	0	
	0	0	0	0	18	48	0	0	0	0	
	0	0	0	0	19	49	0	0	0	0	
	0	0	0	0	20	50	0	0	0	0	
	0	0	0	0	21	51	0	0	0	0	
	0	0	0	0	22	52	0	0	0	0	
	0	0	0	0	23	53	0	0	0	0	
	0	0	0	0	24	54	0	0	0	0	
	0	0	0	0	25	55	0	0	0	0	
	0	0	0	0	26	56	0	0	0	0	
	0	0	0	0	27	57	0	0	0	0	
	0	0	0	0	28	58	0	0	0	0	
	0	0	0	0	29	59	0	0	0	0	

Additional info (include steam dissipation point)

Observer's Signature: J. Johnson

20071107 Method 9 Inspection Form.doc

OCS Environmental, Inc.
Method 9 VE Inspection Form

Date: 11-21-07
Source: #8 BF
Observation Start Time: 1100 00
Observation End Time: 1110 45
Observer's Position: NW OF SOURCE
Distance to source: 60 yds
Direction to source: SE

Height of source: 59
Vertical angle to source:

	Start	End
Emissions color:	AS NOTED	SAME
Background:	SKY	✓
Sky Conditions:	OC-RAIN	✓
Wind Speed:	10-15	✓
Wind Direction:	NE	✓
Ambient Temp:	46°	✓
Relative Humidity%:	100%	✓
Wet Bulb Temp:		

Plume Type: Attached Detached None

Comments	0	15	30	45			0	15	30	45	Comments
	0	0	0	0	0	30					
	0	0	0	0	1	31					
	0	0	0	0	2	32					
	0	0	0	0	3	33					
	0	0	0	0	4	34					
	0	0	0	0	5	35					
	0	0	0	0	6	36					
	0	0	0	0	7	37					
	0	0	0	0	8	38					
	0	0	0	0	9	39					
	0	0	0	0	10	40					
					11	41					
					12	42					
					13	43					
					14	44					
					15	45					
					16	46					
					17	47					
					18	48					
					19	49					
					20	50					
					21	51					
					22	52					
					23	53					
					24	54					
					25	55					
					26	56					
					27	57					
					28	58					
					29	59					

Additional info (include steam dissipation point)

Observer's Signature: J. Johnson

20071107 Method 9 Inspection Form.doc

OCS Environmental, Inc.
Method 9 Source Layout Sketch

Date: 11 / 21 / 07

Observer Name: J. Johnson

Begin Time: 0915 00 Time End: 1110 45

No Sun Visible Times
0915
0945
1015
1045

Observation Point

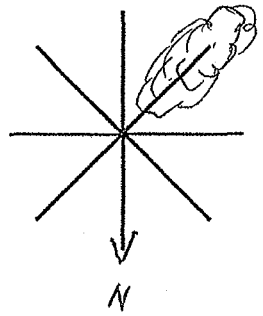

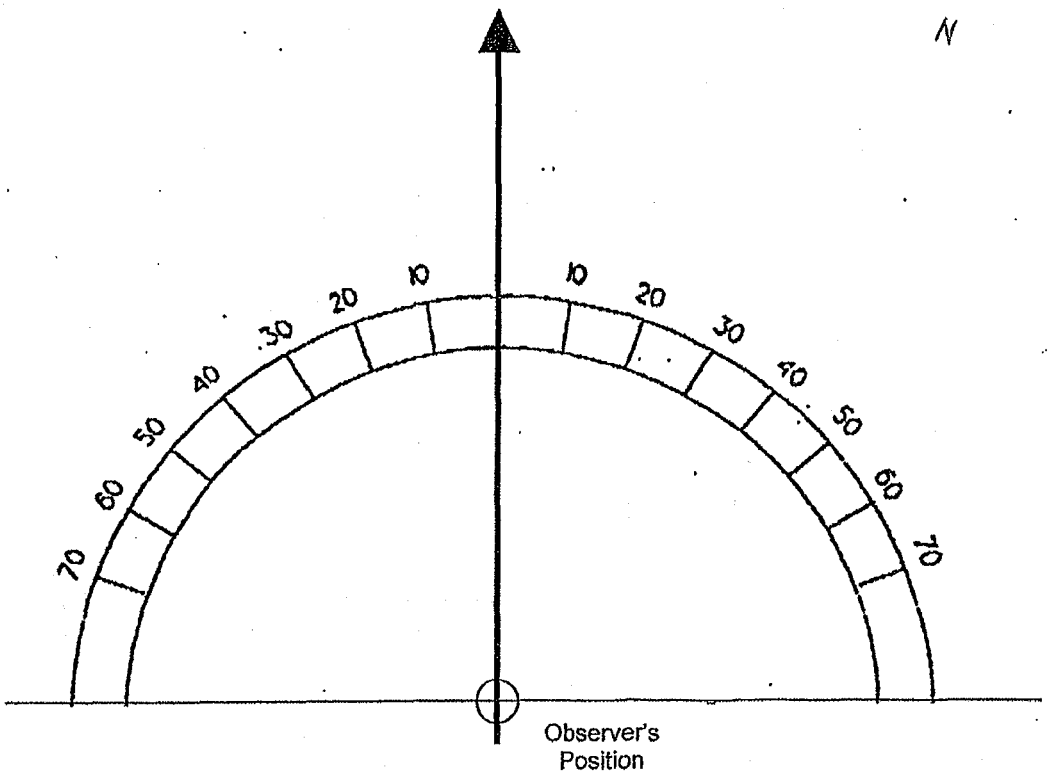

Signature: J. Johnson

20071107 Method 9 Source Layout Sketch.doc

OCS Environmental, Inc.

U.S. Steel Gary Works
Emissions Inspection Summary

Date: 11/21/07

Start Time: 12 14 00 AM / PM

End Time: 13 50 45 AM / PM

No. 2 Precarbon ESP

BOP	Roof Monitor		Gas Cleaners	
QBOP	Roof Monitor		Gas Cleaners	
Blast Furnace	4	6	8	14
Blast Furnace Top	4	6	8	14

The following events or operations contributed to significant emissions:

Time	Heat/Cast Number	Operation	Comments

20071107 Inspection Summary.doc

OCS Environmental, Inc.
Method 9 VE Inspection Form

			Start	End
Date:	11-21-07			
Source:	# 8 BF	Emissions color:	AS NOTED	SAME
Observation Start Time:	1214 00	Background:	c	
Observation End Time:	1259 45	Sky Conditions:	O.C-RAIN/	
Observer's Position:	NW OF SOURCE	Wind Speed:	10-15	
Distance to source:	60 YDS	Wind Direction:	NE	
Direction to source:	SE	Ambient Temp:	46	
		Relative Humidity%:	100%	
Height of source:	59	Wet Bulb Temp:		
Vertical angle to source:				

Plume Type: Attached Detached None

Comments	0	15	30	45			0	15	30	45	Comments
					0	30	0	0	0	0	
					1	31	0	0	0	0	
					2	32	0	0	0	0	
					3	33	0	0	0	0	
					4	34	0	0	0	0	
					5	35	0	0	0	0	
					6	36	0	0	0	0	
					7	37	0	0	0	0	
					8	38	0	0	0	0	
					9	39	0	0	0	0	
					10	40	0	0	0	0	
					11	41	0	0	0	0	
					12	42	0	0	0	0	
					13	43	0	0	0	0	
	0	0	0	0	14	44	0	0	0	0	
	0	0	0	0	15	45	0	0	0	0	
	0	0	0	0	16	46	0	0	0	0	
	0	0	0	0	17	47	0	0	0	0	
	0	0	0	0	18	48	0	0	0	0	
	0	0	0	0	19	49	0	0	0	0	
	0	0	0	0	20	50	0	0	0	0	
	0	0	0	0	21	51	0	0	0	0	
	0	0	0	0	22	52	0	0	0	0	
	0	0	0	0	23	53	0	0	0	0	
	0	0	0	0	24	54	0	0	0	0	
	0	0	0	0	25	55	0	0	0	0	
	0	0	0	0	26	56	0	0	0	0	
	0	0	0	0	27	57	0	0	0	0	
	0	0	0	0	28	58	0	0	0	0	
	0	0	0	0	29	59	0	0	0	0	

Additional info (include steam dissipation point)

Observer's Signature: J. Johnson

20071107 Method 9 Inspection Form.doc

OCS Environmental, Inc.
Method 9 VE Inspection Form

Date: 11-21-07
Source: # 8 BF
Observation Start Time: 1300
Observation End Time: 1350
Observer's Position: NW OF SOURCE
Distance to source: 60 YDS
Direction to source: SE

Height of source: 59'
Vertical angle to source:

	Start	End
Emissions color:	AS NOTED	SAME
Background:	-	
Sky Conditions:	OC-RAINY	
Wind Speed:	10-15	
Wind Direction:	NE	
Ambient Temp:	46°	
Relative Humidity%:	100%	
Wet Bulb Temp:		

Plume Type: Attached Detached None

Comments	0	15	30	45			0	15	30	45	Comments
	0	0	0	0	0	30	0	0	0	0	
	0	0	0	0	1	31	0	0	0	0	
	0	0	0	0	2	32	0	0	0	0	
	0	0	0	0	3	33	0	0	0	0	
	0	0	0	0	4	34	0	0	0	0	
	0	0	0	0	5	35	0	0	0	0	
	0	0	0	0	6	36	0	0	0	0	
	0	0	0	0	7	37	0	0	0	0	
	0	0	0	0	8	38	0	0	0	0	
	0	0	0	0	9	39	0	0	0	0	
	0	0	0	0	10	40	0	0	0	0	
	0	0	0	0	11	41	0	0	0	0	
	0	0	0	0	12	42	0	0	0	0	
	0	0	0	0	13	43	0	0	0	0	
	0	0	0	0	14	44	0	0	0	0	
	0	0	0	0	15	45	0	0	0	0	
	0	0	0	0	16	46	0	0	0	0	
	0	0	0	0	17	47	0	0	0	0	
	0	0	0	0	18	48	0	0	0	0	
	0	0	0	0	19	49	0	0	0	0	
	0	0	0	0	20	50	0	0	0	0	
	0	0	0	0	21	51					
	0	0	0	0	22	52					
	0	0	0	0	23	53					
	0	0	0	0	24	54					
	0	0	0	0	25	55					
	0	0	0	0	26	56					
	0	0	0	0	27	57					
	0	0	0	0	28	58					
	0	0	0	0	29	59					

Additional info (include steam dissipation point)

Observer's Signature: J Johnson

20071107 Method 9 Inspection Form.doc

OCS Environmental, Inc.
Method 9 Source Layout Sketch

Date: 11/21/07
Observer Name: J. Johnson
Begin Time: 1214 00 Time End: 1350 43

No Sun Visible Times
1214
1244
1314
1344

Observation Point

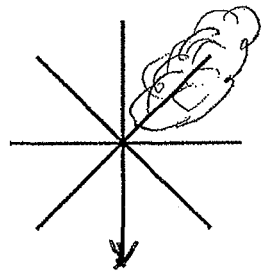

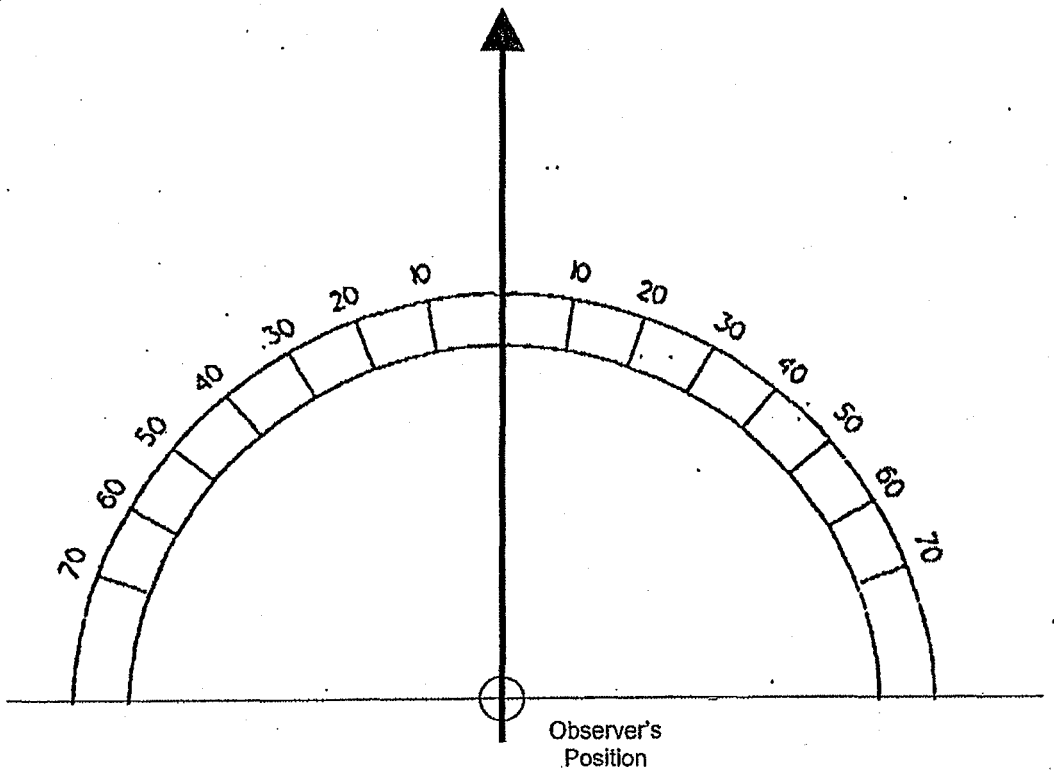

Signature: J. Johnson

20071107 Method 9 Source Layout Sketch.doc

3-3

OCS Environmental, Inc.
Method 9 VE Inspection Form

Page 1 of 1

			Start	End
Date:	11/19/07			
Source:	#8 BLAST FURNACE	Emissions color:	AS NOTED	
Observation Start Time:	0919	Background:	SKY	SAME
Observation End Time:	0945	Sky Conditions:	OVERCAST	|
Observer's Position:	SOUTHWEST OF FUR.	Wind Speed:	10	|
Distance to source:	300' FT	Wind Direction:	SOUTH	|
Direction to source:	NE	Ambient Temp:	43	44
		Relative Humidity%:	93%	↓
Height of source:	59'	Wet Bulb Temp:	—	—
Vertical angle to source:	—			

Plume Type: Attached Detached (None)

Comments	0	15	30	45			0	15	30	45	Comments
					0	30	0	0	0	0	
					1	31	0	0	0	0	
					2	32	0	0	0	0	
					3	33	0	0	0	0	
					4	34	0	0	0	0	
					5	35	0	0	0	0	
					6	36	0	0	0	0	
					7	37	0	0	0	0	
					8	38	0	0	0	0	
					9	39	0	0	0	0	
					10	40	0	0	0	0	
					11	41	0	0	0	0	
					12	42	0	0	0	0	
					13	43	0	0	0	0	
					14	44	0	0	0	0	
					15	45	0	0	0	0	
					16	46	0	0	0	0	
					17	47	0	0	0	0	
CAST #32227					18	48	0	0	0	0	
Drill up	0	0	0	0	19	49	0	0	0	0	
	0	0	0	0	20	50	0	0	0	0	
	0	0	0	0	21	51	0	0	0	0	
	0	0	0	0	22	52	0	0	0	0	
	0	0	0	0	23	53	0	0	0	0	
	0	0	0	0	24	54	0	0	0	0	
	0	0	0	0	25	55	0	0	0	0	
	0	0	0	0	26	56	0	0	0	0	
	0	0	0	0	27	57	0	0	0	0	
	0	0	0	0	28	58	0	0	0	0	
	0	0	0	0	29	59	0	0	0	0	

Additional info (include steam dissipation point)

Observer's Signature: Jon Simpson

20071107 Method 9 Inspection Form.doc

OCS Environmental, Inc.
Method 9 VE Inspection Form

Date: 11/19/07
Source: #9 BLAST FURNACE
Observation Start Time: 1000
Observation End Time: 1047
Observer's Position: SOUTHWEST OF FUR.
Distance to source: 300 FT.
Direction to source: NE

Height of source: 59'
Vertical angle to source: —

	Start	End
Emissions color:	AS NOTED	SAME
Background:	SKY	
Sky Conditions:	OVERCAST	
Wind Speed:	10	
Wind Direction:	SOUTH	
Ambient Temp:	44°	
Relative Humidity%:	98%	
Wet Bulb Temp:	—	—

Plume Type: Attached Detached None

Comments	0	15	30	45			0	15	30	45	Comments
	0	0	0	0	0	30	0	0	0	0	
	0	0	0	0	1	31	0	0	0	0	
	0	0	0	0	2	32	0	0	0	0	
	0	0	0	0	3	33	0	0	0	0	
	0	0	0	0	4	34	0	0	0	0	
	0	0	0	0	5	35	0	0	0	0	
	0	0	0	0	6	36	0	0	0	0	
	0	0	0	0	7	37	0	0	0	0	
	0	0	0	0	8	38	0	0	0	0	CAST #3227
	0	0	0	0	9	39	0	0	0	0	plugging
	0	0	0	0	10	40	0	0	0	0	
	0	0	0	0	11	41					
	0	0	0	0	12	42					
	0	0	0	0	13	43					
	0	0	0	0	14	44					
	0	0	0	0	15	45					
	0	0	0	0	16	46					
	0	0	0	0	17	47					
	0	0	0	0	18	48					
	0	0	0	0	19	49					
	0	0	0	0	20	50					
	0	0	0	0	21	51					
	0	0	0	0	22	52					
	0	0	0	0	23	53					
	0	0	0	0	24	54					
	0	0	0	0	25	55					
	0	0	0	0	26	56					
	0	0	0	0	27	57					
	0	0	0	0	28	58					
	0	0	0	0	29	59					

Additional info (include steam dissipation point)

Observer's Signature: Jon Simpson

20071107 Method 9 Inspection Form.doc

OCS Environmental, Inc.
Method 9 Source Layout Sketch

CAST # 3227

Date: 11 / 19 / 07

Observer Name: Jon Simpson

Begin Time: 0919 Time End: 1041

No Sun Visible Times
0919, 0930, 1000,
1030,

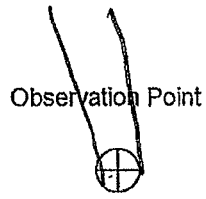

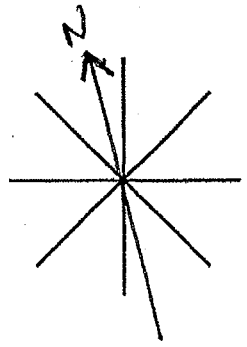

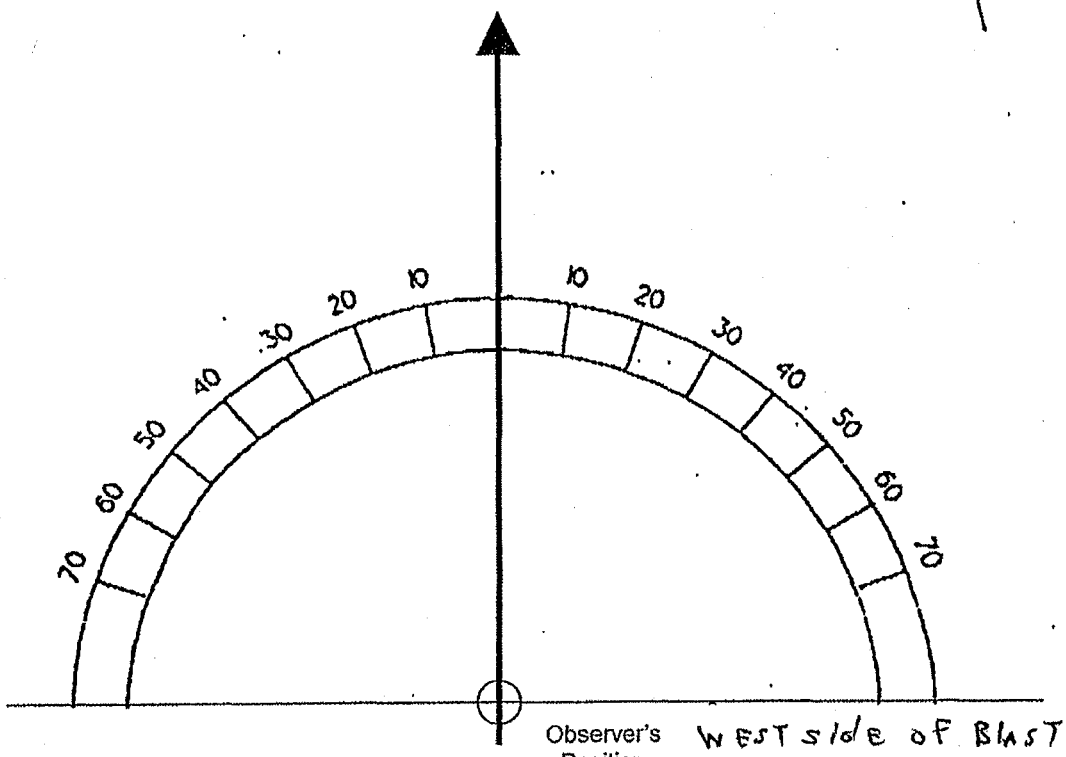

WEST side of BLAST FURNACE Road, South of #8 FURNACE.

Signature: Jon Simpson

20071107 Method 9 Source Layout Sketch.doc

OCS Environmental, Inc.
Method 9 VE Inspection Form

Page 1 of 2

Date: 11/19/07
Source: #8 Blast Furnace
Observation Start Time: 1138
Observation End Time: 1200
Observer's Position: Southwest of Fur.
Distance to source: 300'
Direction to source: NE

Height of source: 59'
Vertical angle to source: —

	Start	End
Emissions color:	As Noted	Same
Background:	Sky	↓
Sky Conditions:	Overcast	↓
Wind Speed:	10	↓
Wind Direction:	South	↓
Ambient Temp:	46°	↓
Relative Humidity%:	93 %	↓
Wet Bulb Temp:	—	↓

Plume Type: Attached Detached (None)

Comments	0	15	30	45			0	15	30	45	Comments
					0	30					
					1	31					
					2	32					
					3	33					
					4	34					
					5	35					
					6	36					
					7	37					CART #3228
					8	38	0	0	0	0	Drill up
					9	39	0	0	0	0	
					10	40	0	0	0	0	
					11	41	0	0	0	0	
					12	42	0	0	0	0	
					13	43	0	0	0	0	
					14	44	0	0	0	0	
					15	45	0	0	0	0	
					16	46	0	0	0	0	
					17	47	0	0	0	0	
					18	48	0	0	0	0	
					19	49	0	0	0	0	
					20	50	0	0	0	0	
					21	51	0	0	0	0	
					22	52	0	0	0	0	
					23	53	0	0	0	0	
					24	54	0	0	0	0	
					25	55	0	0	0	0	
					26	56	0	0	0	0	
					27	57	0	0	0	0	
					28	58	0	0	0	0	
					29	59	0	0	0	0	

Additional info (include steam dissipation point)

Observer's Signature: Jon Simpson

20071107 Method 9 Inspection Form.doc

OCS Environmental, Inc.
Method 9 VE Inspection Form

			Start	End
Date:	11/19/07			
Source:	#8 BLAST FURNACE	Emissions color:	AS NOTED	SAME
Observation Start Time:	1200	Background:	SKY	
Observation End Time:	125945	Sky Conditions:	OVERCAST	
Observer's Position:	SOUTHWEST OF FUR.	Wind Speed:	10	
Distance to source:	300'	Wind Direction:	SOUTH	
Direction to source:	NE	Ambient Temp:	46°	
		Relative Humidity%:	98%	
Height of source:	59'	Wet Bulb Temp:	—	—
Vertical angle to source:	—			

Plume Type: Attached Detached None

Comments	0	15	30	45			0	15	30	45	Comments
	0	0	0	0	0	30	0	0	0	0	
Plugging	0	0	0	0	1	31	0	0	0	0	
	0	0	0	0	2	32	0	0	0	0	
					3	33	0	0	0	0	
					4	34	0	0	0	0	
					5	35	0	0	0	0	
					6	36	0	0	0	0	
					7	37	0	0	0	0	
					8	38	0	0	0	0	
					9	39	0	0	0	0	
					10	40	0	0	0	0	
					11	41	0	0	0	0	
					12	42	0	0	0	0	
					13	43	0	0	0	0	
CAST # 3229					14	44	0	0	0	0	
Drill up	0	0	0	0	15	45	0	0	0	0	
	0	0	0	0	16	46	0	0	0	0	
	0	0	0	0	17	47	0	0	0	0	
	0	0	0	0	18	48	0	0	0	0	
	0	0	0	0	19	49	0	0	0	0	
	0	0	0	0	20	50	0	0	0	0	
	0	0	0	0	21	51	0	0	0	0	
	0	0	0	0	22	52	0	0	0	0	
	0	0	0	0	23	53	0	0	0	0	
	0	0	0	0	24	54	0	0	0	0	
	0	0	0	0	25	55	0	0	0	0	
	0	0	0	0	26	56	0	0	0	0	
	0	0	0	0	27	57	0	0	0	0	
	0	0	0	0	28	58	0	0	0	0	
	0	0	0	0	29	59	0	0	0	0	

Additional info (include steam dissipation point)

Observer's Signature: Jon Simpson

OCS Environmental, Inc.
Method 9 VE Inspection Form

Date: 11/19/07
Source: 8 BLAST FURNACE
Observation Start Time: 1300
Observation End Time: 1352,45
Observer's Position: SOUTHWEST OF FUR.
Distance to source: 300'
Direction to source: NE

Height of source: 59
Vertical angle to source: —

	Start	End
Emissions color:	AS NOTED	SAME
Background:	SKY	
Sky Conditions:	OVERCAST	
Wind Speed:	10	
Wind Direction:	SOUTH	
Ambient Temp:	46°	
Relative Humidity%:	93%	
Wet Bulb Temp:	—	—

Plume Type: Attached Detached None

Comments	0	15	30	45			0	15	30	45	Comments
	0	0	0	0	0	30	0	0	0	0	
	0	0	0	0	1	31	0	0	0	0	
	0	0	0	0	2	32	0	0	0	0	
	0	0	0	0	3	33	0	0	0	0	
	0	0	0	0	4	34	0	0	0	0	
	0	0	0	0	5	35	0	0	0	0	
	0	0	0	0	6	36	0	0	0	0	
	0	0	0	0	7	37	0	0	0	0	
	0	0	0	0	8	38	0	0	0	0	
	0	0	0	0	9	39	0	0	0	0	
	0	0	0	0	10	40	0	0	0	0	
	0	0	0	0	11	41	0	0	0	0	
	0	0	0	0	12	42	0	0	0	0	
	0	0	0	0	13	43	0	0	0	0	
	0	0	0	0	14	44	0	0	0	0	
	0	0	0	0	15	45	0	0	0	0	
	0	0	0	0	16	46	0	0	0	0	
	0	0	0	0	17	47	0	0	0	0	
	0	0	0	0	18	48	0	0	0	0	
	0	0	0	0	19	49	0	0	0	0	
	0	0	0	0	20	50	0	0	0	0	CAST #3228
	0	0	0	0	21	51	0	0	0	0	plugging
	0	0	0	0	22	52	0	0	0	0	
	0	0	0	0	23	53					
	0	0	0	0	24	54					
	0	0	0	0	25	55					
	0	0	0	0	26	56					
	0	0	0	0	27	57					
	0	0	0	0	28	58					
	0	0	0	0	29	59					

Additional info (include steam dissipation point)

Observer's Signature: Jon Simpson

20071107 Method 9 Inspection Form.doc

OCS Environmental, Inc.
Method 9 Source Layout Sketch

CAST # 3228

Date: 11/19/07

Observer Name: Jon Simpson

Begin Time: 1138

Time End: ~~1202~~ 1352

No Sun Visible Times
1138, 1200, 1215
1230, 1300, 1330

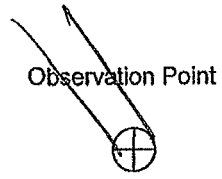

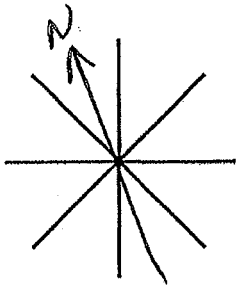

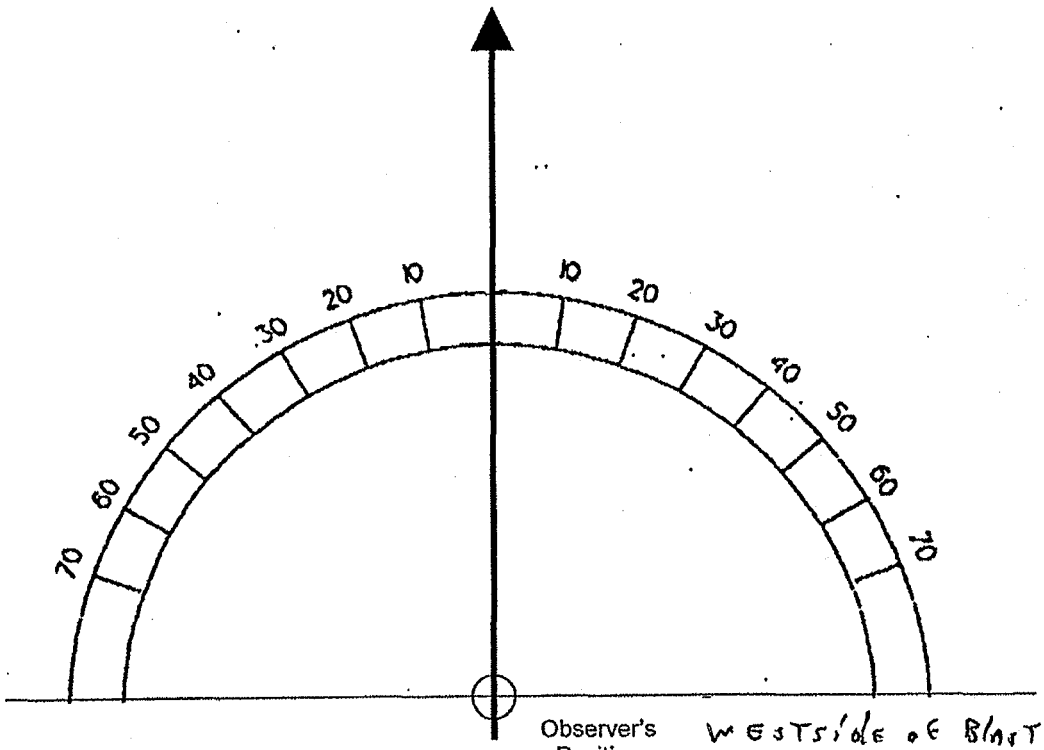

WEST SIDE OF BLAST FURNACE ROAD, SOUTH OF #8 FURNACE

Signature: Jon Simpson

20071107 Method 9 Source Layout Sketch.doc

3-4

OCS Environmental, Inc.
Method 9 VE Inspection Form

Page 1 of 3

Date: 11/28/07
Source: 8 BLAST FURNACE
Observation Start Time: 1028
Observation End Time: 105945
Observer's Position: SW by boilerhouse
Distance to source: 300'
Direction to source: NE

Height of source: 59'
Vertical angle to source: —

	Start	End
Emissions color:	AS NOTED	SAME
Background:	SKY	↓
Sky Conditions:	mostly cloudy	OVERCAST
Wind Speed:	7-10	↓
Wind Direction:	SOUTH	↓
Ambient Temp:	36°	↓
Relative Humidity%:	78%	↓
Wet Bulb Temp:	—	—

Plume Type: Attached Detached None

Comments	0	15	30	45			0	15	30	45	Comments
					0	30	0	0	0	0	
					1	31	0	0	0	0	
					2	32	0	0	0	0	
					3	33	0	0	0	0	
					4	34	0	0	0	0	
					5	35	0	0	0	0	
					6	36	0	0	0	0	
					7	37	0	0	0	0	
					8	38	0	0	0	0	
					9	39	0	0	0	0	
					10	40	0	0	0	0	
					11	41	0	0	0	0	
					12	42	0	0	0	0	
					13	43	0	0	0	0	
					14	44	0	0	0	0	
					15	45	0	0	0	0	
					16	46	0	0	0	0	
					17	47	0	0	0	0	
					18	48	0	0	0	0	
					19	49	0	0	0	0	
					20	50	0	0	0	0	
					21	51	0	0	0	0	
					22	52	0	0	0	0	
					23	53	0	0	0	0	
					24	54	0	0	0	0	
					25	55	0	0	0	0	
					26	56	0	0	0	0	
					27	57	0	0	0	0	
CAST #3325					28	58	0	0	0	0	
Drill up	0	0	0	0	29	59	0	0	0	0	
	0	0	0	0							

Additional Info (include steam dissipation point)

Observer's Signature: Jon Simpson

20071107 Method 9 Inspection Form.doc

OCS Environmental, Inc.
Method 9 VE Inspection Form

Date: 11/28/07
Source: 8 Blast Furnace
Observation Start Time: 1100
Observation End Time: 11 39 45
Observer's Position: SW by boiler house
Distance to source: 300'
Direction to source: NE

Height of source: 59'
Vertical angle to source: –

	Start	End
Emissions color:	As Noted	SAME
Background:	Sky	
Sky Conditions:	overcast	
Wind Speed:	7-10	
Wind Direction:	South	
Ambient Temp:	36°	
Relative Humidity%:	78%	
Wet Bulb Temp:	—	—

Plume Type: Attached Detached None

CAST #3325

Comments	0	15	30	45			0	15	30	45	Comments
	0	0	0	0	0	30	0	0	0	0	
	0	0	0	0	1	31	0	0	0	0	
	0	0	0	0	2	32	0	0	0	0	
	0	0	0	0	3	33	0	0	0	0	
	0	0	0	0	4	34	0	0	0	0	
	0	0	0	0	5	35	0	0	0	0	pluging
	0	0	0	0	6	36	0	0	0	0	
	0	0	0	0	7	37	0	0	0	0	
	0	0	0	0	8	38	0	0	0	0	
	0	0	0	0	9	39	0	0	0	0	End CAST
	0	0	0	0	10	40					
	0	0	0	0	11	41					
	0	0	0	0	12	42					
	0	0	0	0	13	43					
	0	0	0	0	14	44					
	0	0	0	0	15	45					
	0	0	0	0	16	46					
	0	0	0	0	17	47					
	0	0	0	0	18	48					
	0	0	0	0	19	49					
	0	0	0	0	20	50					
	0	0	0	0	21	51					
	0	0	0	0	22	52					
	0	0	0	0	23	53					
	0	0	0	0	24	54					
	0	0	0	0	25	55					
	0	0	0	0	26	56					
	0	0	0	0	27	57					
	0	0	0	0	28	58					
	0	0	0	0	29	59					

Additional info (include steam dissipation point)

Observer's Signature: Jon Simpson

OCS Environmental, Inc.
Method 9 Source Layout Sketch

CASS-7325

Date: 11/28/07

Observer Name: Jon Simpson

Begin Time: 10:28

Time End: 1140

No Sun Visible Times
1100, 1130

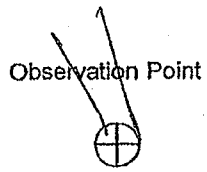

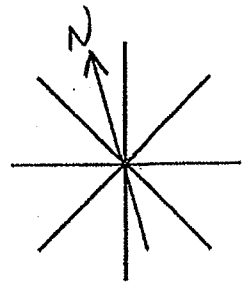

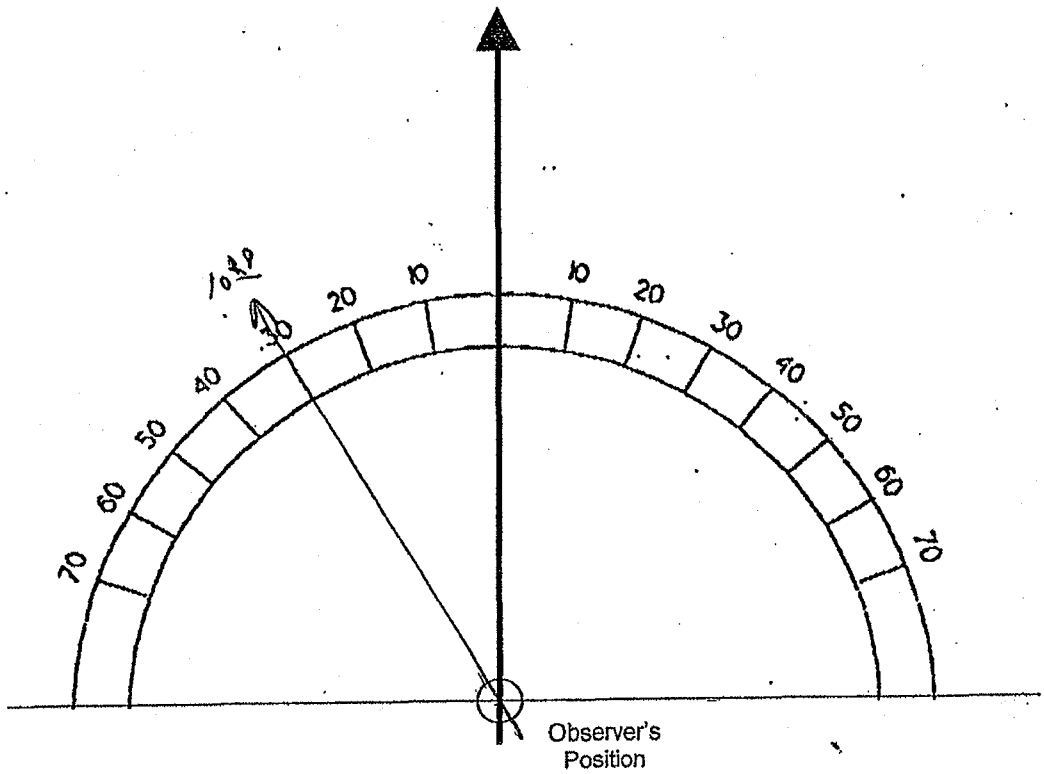

Signature: Jon Simpson

20071107 Method 9 Source Layout Sketch.doc

OCS Environmental, Inc.
Method 9 VE Inspection Form

Page 1 of 3

			Start	End
Date:	11/28/07	Emissions color:	As Noted	SAME
Source:	SB/ASTFURNACE	Background:	SKY	
Observation Start Time:	1219	Sky Conditions:	mostly cloudy	
Observation End Time:	125945	Wind Speed:	7-10	
Observer's Position:	SW by boiler House	Wind Direction:	South	
Distance to source:	300'	Ambient Temp:	45°	
Direction to source:	NE	Relative Humidity%:	76%	
Height of source:	59'	Wet Bulb Temp:	—	—
Vertical angle to source:	—			

Plume Type: Attached Detached None

Comments	0	15	30	45			0	15	30	45	Comments
					0	30	0	0	0	0	
					1	31	0	0	0	0	
					2	32	0	0	0	0	
					3	33	0	0	0	0	
					4	34	0	0	0	0	
					5	35	0	0	0	0	
					6	36	0	0	0	0	
					7	37	0	0	0	0	
					8	38	0	0	0	0	
					9	39	0	0	0	0	
					10	40	0	0	0	0	
					11	41	0	0	0	0	
					12	42	0	0	0	0	
					13	43	0	0	0	0	
					14	44	0	0	0	0	
					15	45	0	0	0	0	
					16	46	0	0	0	0	
CAST # 3326					17	47	0	0	0	0	
Drill up	0	0	0	0	18	48	0	0	0	0	
	0	0	0	0	19	49	0	0	0	0	
	0	0	0	0	20	50	0	0	0	0	
	0	0	0	0	21	51	0	0	0	0	
	0	0	0	0	22	52	0	0	0	0	
	0	0	0	0	23	53	0	0	0	0	
	0	0	0	0	24	54	0	0	0	0	
	0	0	0	0	25	55	0	0	0	0	
	0	0	0	0	26	56	0	0	0	0	
	0	0	0	0	27	57	0	0	0	0	
	0	0	0	0	28	58	0	0	0	0	
	0	0	0	0	29	59	0	0	0	0	

Additional info (include steam dissipation point)

Observer's Signature: Jon Simpson

20071107 Method 9 Inspection Form.doc

OCS Environmental, Inc.
Method 9 VE Inspection Form

Page 2 of 3

			Start	End
Date:	11/28/07			
Source:	8 BLAST FURNACE	Emissions color:	As Noted	SAME
Observation Start Time:	1300	Background:	Sky	
Observation End Time:	1359 45	Sky Conditions:	mostly cloudy	
Observer's Position:	S w by boiler House	Wind Speed:	7-10	
Distance to source:	300'	Wind Direction:	South	
Direction to source:	NE	Ambient Temp:	45°	
		Relative Humidity%:	76%	
Height of source:	59'	Wet Bulb Temp:	—	—
Vertical angle to source:	—			

Plume Type: Attached Detached None

CAST-3326

Comments	0	15	30	45			0	15	30	45	Comments
	0	0	0	0	0	30	0	0	0	0	
	0	0	0	0	1	31	0	0	0	0	
	0	0	0	0	2	32	0	0	0	0	
	0	0	0	0	3	33	0	0	0	0	
	0	0	0	0	4	34	0	0	0	0	
	0	0	0	0	5	35	0	0	0	0	
	0	0	0	0	6	36	0	0	0	0	
	0	0	0	0	7	37	0	0	0	0	
	0	0	0	0	8	38	0	0	0	0	
	0	0	0	0	9	39	0	0	0	0	
	0	0	0	0	10	40	0	0	0	0	
	0	0	0	0	11	41	0	0	0	0	
	0	0	0	0	12	42	0	0	0	0	
	0	0	0	0	13	43	0	0	0	0	
	0	0	0	0	14	44	0	0	0	0	
	0	0	0	0	15	45	0	0	0	0	
	0	0	0	0	16	46	0	0	0	0	
	0	0	0	0	17	47	0	0	0	0	
	0	0	0	0	18	48	0	0	0	0	
	0	0	0	0	19	49	0	0	0	0	
	0	0	0	0	20	50	0	0	0	0	
	0	0	0	0	21	51	0	0	0	0	
	0	0	0	0	22	52	0	0	0	0	
	0	0	0	0	23	53	0	0	0	0	
	0	0	0	0	24	54	0	0	0	0	
	0	0	0	0	25	55	0	0	0	0	
	0	0	0	0	26	56	0	0	0	0	
	0	0	0	0	27	57	0	0	0	0	
	0	0	0	0	28	58	0	0	0	0	
	0	0	0	0	29	59	0	0	0	0	

Additional info (include steam dissipation point)

Observer's Signature: Jon Simpson

20071107 Method 9 Inspection Form.doc

OCS Environmental, Inc.
Method 9 VE Inspection Form

Date: 11/28/07
Source: 8 BLAST FURNACE
Observation Start Time: 1400
Observation End Time: 1409 59
Observer's Position: SW by BOILERHOUSE
Distance to source: 300'
Direction to source: NE
Height of source: 59'
Vertical angle to source: —

	Start	End
Emissions color:	AS NOTED	SAME
Background:	SKY	↓
Sky Conditions:	mostly cloudy	↓
Wind Speed:	7-10	↓
Wind Direction:	SOUTH	↓
Ambient Temp:	45°	↓
Relative Humidity%:	76%	↓
Wet Bulb Temp:	—	↓

Plume Type: Attached Detached None

CAST #3326

Comments	0	15	30	45			0	15	30	45	Comments
	0	0	0	0	0	30					
	0	0	0	0	1	31					
	0	0	0	0	2	32					
	0	0	0	0	3	33					
	0	0	0	0	4	34					
	0	0	0	0	5	35					
	0	0	0	0	6	36					
	0	0	0	0	7	37					
	0	0	0	0	8	38					
End CAST	0	0	0	0	9	39					
					10	40					
					11	41					
					12	42					
					13	43					
					14	44					
					15	45					
					16	46					
					17	47					
					18	48					
					19	49					
					20	50					
					21	51					
					22	52					
					23	53					
					24	54					
					25	55					
					26	56					
					27	57					
					28	58					
					29	59					

Additional info (include steam dissipation point)

Observer's Signature: Jon Simpson

20071107 Method 9 Inspection Form.doc

OCS Environmental, Inc.
Method 9 Source Layout Sketch

Date: 11/28/07 CASTA 3326

Observer Name: Jon Simpson

Begin Time: 1218 Time End: 1409

No Sun Visible Times
1228, 1330,
1400,

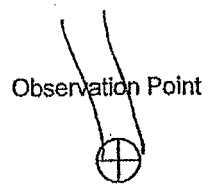

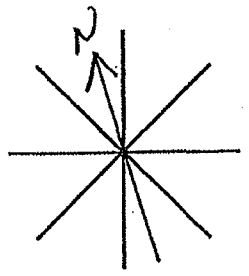

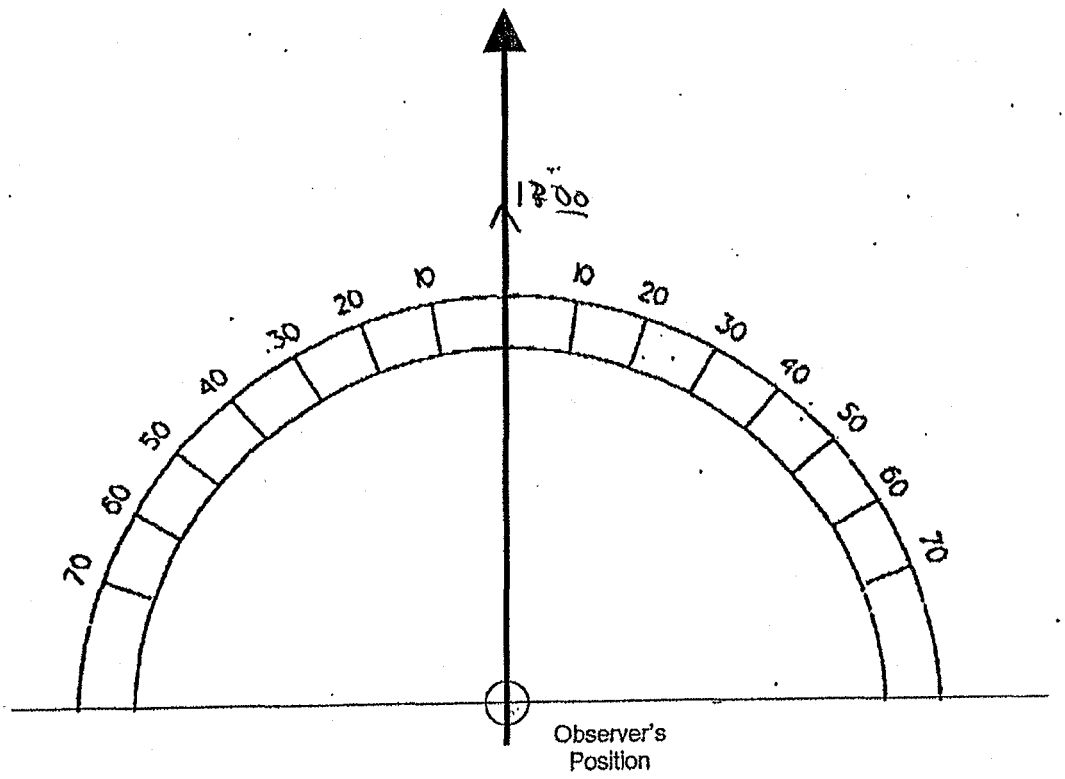

Signature: Jon Simpson

20071107 Method 9 Source Layout Sketch.doc

4

David W Hacker/Headquarters/USS
01/03/2008 10:12 AM

To Karen E Davis/Headquarters/USS@USS
cc
bcc
Subject CAA Section 114, No. 13 - USS Emissions, Iron Producing 8 BF VE

Please print. Thanks. CAA Section 114, No. 13 - USS Emissions, Iron Producing 8 BF VE

1 071112 8BF Casthouse.pdf
2 071113 8BF Casthouse.pdf
3 071128 8BF Casthouse.pdf
4 071207 8BF Casthouse.pdf
5 071119 8BF Casthouse.pdf
6 071127 8BF Casthouse.pdf
7 071120 8BF Casthouse.pdf
8 071206 8BF Casthouse.pdf

David W. Hacker
Attorney
United States Steel Corporation
Law Department
600 Grant Street - Room 1500
Pittsburgh, PA 15219
Phone: 412.433.2919
Fax: 412.433.2964

CONFIDENTIALITY NOTICE: Unless otherwise indicated, the information contained in or attached to this e-mail is attorney-client privileged and/or confidential. If the reader of this message is not the intended recipient, or the agent responsible to deliver to the intended recipient, you are hereby notified that any dissemination, distribution or copying of this communication is strictly prohibited. If you have received this in error, or are not sure whether it is privileged, notify the sender by return e-mail and destroy all copies of the communication. Thank you.

4-1

OCS Environmental, Inc.

U.S. Steel Gary Works
Emissions Inspection Summary

Date: 11 / 12 / 07

Start Time: 09M (AM) / PM

End Time: 11 12 (AM) / PM

No. 2 Precarbon ESP

BOP	Roof Monitor		Gas Cleaners	
QBOP	Roof Monitor		Gas Cleaners	
Blast Furnace	4	6	8	14
Blast Furnace Top	4	6	8	14

The following events or operations contributed to significant emissions:

Time	Heat/Cast Number	Operation	Comments
NO INCIDENTS TO REPORT.			

20071107 Inspection Summary.doc

OCS Environmental, Inc.
Method 9 VE Inspection Form

Page 1 of 3

			Start	End
Date:	11/12/07	Emissions color:	As Noted	Same
Source:	#8BF RM + SILO	Background:	Sky	
Observation Start Time:	0923A	Sky Conditions:	Cloudy	
Observation End Time:	09-59-45 A.	Wind Speed:	8	
Observer's Position:	8BF2	Wind Direction:	SW	
Distance to source:	350 YDS	Ambient Temp:	60°	
Direction to source:	W 310°	Relative Humidity%:	90%	
Height of source:	59 ft	Wet Bulb Temp:	—	
Vertical angle to source:	6°			

Plume Type: Attached Detached None

Comments	0	15	30	45			0	15	30	45	Comments
					0	30	0	0	0	0	
					1	31	0	0	0	0	
					2	32	0	0	0	0	
					3	33	0	0	0	0	
					4	34	0	0	0	0	
					5	35	0	0	0	0	
					6	36	0	0	0	0	
					7	37	0	0	0	0	
					8	38	0	0	0	0	
					9	39	0	0	0	0	
					10	40	0	0	0	0	
					11	41	0	0	0	0	
					12	42	0	0	0	0	
					13	43	0	0	0	0	
					14	44	0	0	0	0	
0923A.					15	45	0	0	0	0	
					16	46	0	0	0	0	
Begin Observation	0	0	0	0	17	47	0	0	0	0	
Cast # 3156	0	0	0	0	18	48	0	0	0	0	
in Progress	0	0	0	0	19	49	0	0	0	0	
	0	0	0	0	20	50	0	0	0	0	
	0	0	0	0	21	51	0	20	10	10	40 Brown
	0	0	0	0	22	52	30	20	10	10	20 110 Brown
	0	0	0	0	23	53	10	10	10	10	40 150 ✓
	0	0	0	0	24	54	10	10	10	10	40 190 ✓
	0	0	0	0	25	55	10	10	10	10	40 230 ✓
	0	0	0	0	26	56	10	30	0	0	40 270 - Plug Break
	0	0	0	0	27	57	0	0	0	0	
	0	0	0	0	28	58	0	0	0	0	
	0	0	0	0	29	59	0	0	0	0	

Total 270 11.2%

Additional info (include steam dissipation point)

Observer's Signature

20071107 Method 9 Inspection Form.doc

OCS Environmental, Inc.
Method 9 VE Inspection Form

Page 2 of 3

			Start	End
Date:	11/12/07	Emissions color:	As Dark	Same
Source:	HB Bf Cam + Sulfur	Background:	Sky	
Observation Start Time:	10:00 A	Sky Conditions:	cloudy	
Observation End Time:	10:59:45 A	Wind Speed:	8	
Observer's Position:	SBF2	Wind Direction:	SW	
Distance to source:	350 yds	Ambient Temp:	60°	
Direction to source:	W 310°	Relative Humidity%:	90%	
		Wet Bulb Temp:	–	
Height of source:	55 ft			
Vertical angle to source:	6°			

Plume Type: (Attached) Detached None

Comments	0	15	30	45			0	15	30	45	Comments
	0	0	0	0	0	30	0	0	0	0	
	0	0	0	0	1	31	0	0	0	0	
	0	0	0	0	2	32	0	0	0	0	
	0	0	0	0	3	33	0	0	0	0	
	0	0	0	0	4	34	0	0	0	0	
	0	0	0	0	5	35	0	0	0	0	
	0	0	0	0	6	36	0	0	0	0	
	0	0	0	0	7	37	0	0	0	0	
	0	0	0	0	8	38	0	0	0	0	
	0	0	0	0	9	39	0	0	0	0	
	0	0	0	0	10	40	0	0	0	0	
	0	0	0	0	11	41	0	0	0	0	
	0	0	0	0	12	42	0	0	0	0	
	0	0	0	0	13	43	0	0	20	20	50 Black Drill of
	0	0	0	0	14	44	20	10	10	20	60 Black Bag
	0	0	0	0	15	45	10	0	0	0	10 – 120 Gust Fast
	0	0	0	0	16	46	0	0	0	0	
	0	0	0	0	17	47	0	0	0	0	
	0	0	0	0	18	48	0	0	0	0	
	0	0	0	0	19	49	0	0	0	0	
	0	0	0	0	20	50	0	0	0	0	
	0	0	0	0	21	51	0	0	0	0	
	0	0	0	0	22	52	0	0	0	0	
	0	0	0	0	23	53	0	0	0	0	
	0	0	0	0	24	54	0	0	0	0	
	0	0	0	0	25	55	0	0	0	0	
	0	0	0	0	26	56	0	0	0	0	
	0	0	0	0	27	57	0	0	0	0	
	0	0	0	0	28	58	0	0	0	0	
	0	0	0	0	29	59	0	0	0	0	

120 TOTAL 51.

Additional info (include steam dissipation point)

Observer's Signature

20071107 Method 9 Inspection Form.doc

OCS Environmental, Inc.
Method 9 VE Inspection Form

Page 3 of 3

			Start	End
Date:	11/12/07	Emissions color:	Black	Same
Source:	#8 BF Emissions	Background:	Sky	
Observation Start Time:	11:00 A	Sky Conditions:	Cloudy	
Observation End Time:	11:16:45 A	Wind Speed:	8	
Observer's Position:	Behind	Wind Direction:	SW	
Distance to source:	350 YDS	Ambient Temp:	60°	
Direction to source:	W310°	Relative Humidity%:	90%	
Height of source:	54 ft	Wet Bulb Temp:	–	
Vertical angle to source:	6°			

Plume Type: Attached Detached None

Comments	0	15	30	45			0	15	30	45	Comments
	0	0	0	0	0	30					
	0	0	0	0	1	31					
	0	0	0	0	2	32					
	0	0	0	0	3	33					
	0	0	0	0	4	34					
	0	0	0	0	5	35					
	0	0	0	0	6	36					
	0	0	0	0	7	37					
	0	0	0	0	8	38					
	0	0	0	0	9	39					
	0	0	0	0	10	40					
	0	0	0	0	11	41					
	0	0	0	0	12	42					
	0	0	0	0	13	43					
	0	0	0	0	14	44					
	0	0	0	0	15	45					
	0	0	0	0	16	46					
End Observation	X	X	X	X	17	47					
11:16:45 = 11:17 A					18	48					
11-12-07					19	49					
					20	50					
					21	51					
					22	52					
					23	53					
					24	54					
					25	55					
					26	56					
					27	57					
					28	58					
					29	59					

Additional info (include steam dissipation point)

Observer's Signature

20071107 Method 9 Inspection Form.doc

OCS Environmental, Inc.
Method 9 Source Layout Sketch

Date: 11, 12, 07

Observer Name: T. Smith

Begin Time: 0617A

Time End: 11-12-45 Am

No Sun Visible Times
0617A
0647A
1017A
1047A

Observation Point

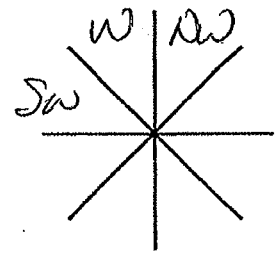

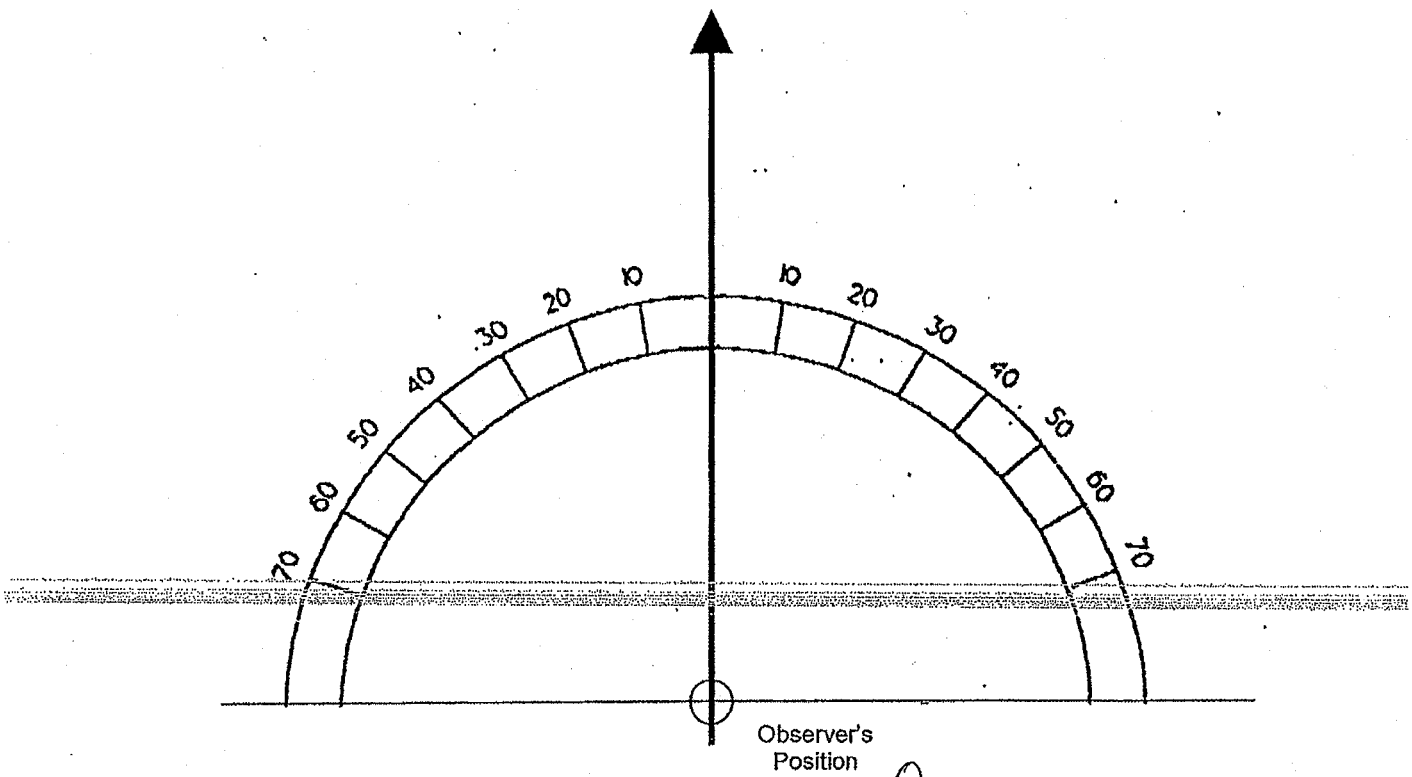

Signature:

20071107 Method 9 Source Layout Sketch.doc

EPA-USS-0330105

U.S. Steel Gary Works
No. 8 Blast Furnace
Emissions Observations Checklist

Observer	R. MAcKey
Start time	IN PROGRESS
End Time	0957
Furnace Mgr	

Clay Type	RVR
Begin	
End	
Pushed	1.50

Date	11-12-07
Cast Number	3156
Cast Tonage	336
Iron Temp	2650
Gas Pressure	65

Mud Gun	Yes	No
Problems Plugging Hole?	☐	☑
Clay Leaking into trough?	☐	☑

Tap Drill		
Problems Opening Hole?	☐ N/A	☐
Oxygen Lance Used?	☐	☐

Sub Car Number

Ladle Condition

	Bright Red	Faintly Glowing	Black	Build Up	Smoky
#1	☐	☐	☐	☐	☐
#2	☐	☐	☐	☐	☐
#3	☐	☐	☐	☐	☐
#4	☐	☐	☐	☐	☐
#5	☐	☐	☐	☐	☐
#6	☐	☐	☐	☐	☐
#7	☐	☐	☐	☐	☐

Comments
Date Corrected
Area Blast Furnace Manager
Environmental Manager

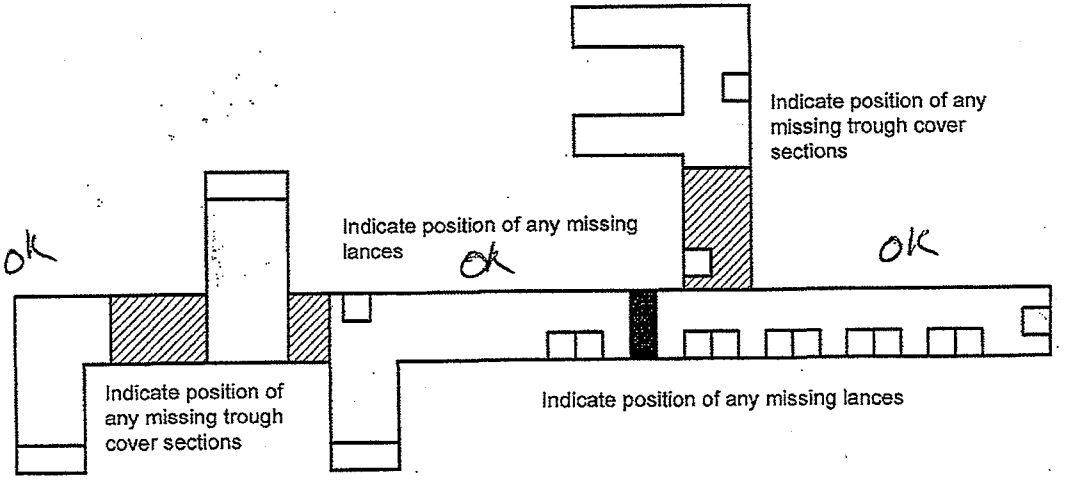

20071107 8BF Inspection Checklist.doc.

EPA-R5-2012-0005960000326

EPA-USS-0330106

U.S. Steel Gary Works
No. 8 Blast Furnace
Emissions Observations Checklist

Observer	RICK MACKEY
Start time	1045
End Time	IN PROGRESS
Furnace Mgr	

Clay Type	RVR
Begin	
End	
Pushed	N/A

Date	11-12-07
Cast Number	3157
Cast Tonage	N/A
Iron Temp	2634
Gas Pressure	65

	Yes	No
Mud Gun		
Problems Plugging Hole?	N/A	
Clay Leaking into trough?	N/A	
Tap Drill		
Problems Opening Hole?		✓
Oxygen Lance Used?		✓

Sub Car Number

Ladle Condition

	Bright Red	Faintly Glowing	Black	Build Up	Smoky
#1					
#2					
#3					
#4					
#5					
#6					
#7					

Comments
Date Corrected
Area Blast Furnace Manager
Environmental Manager

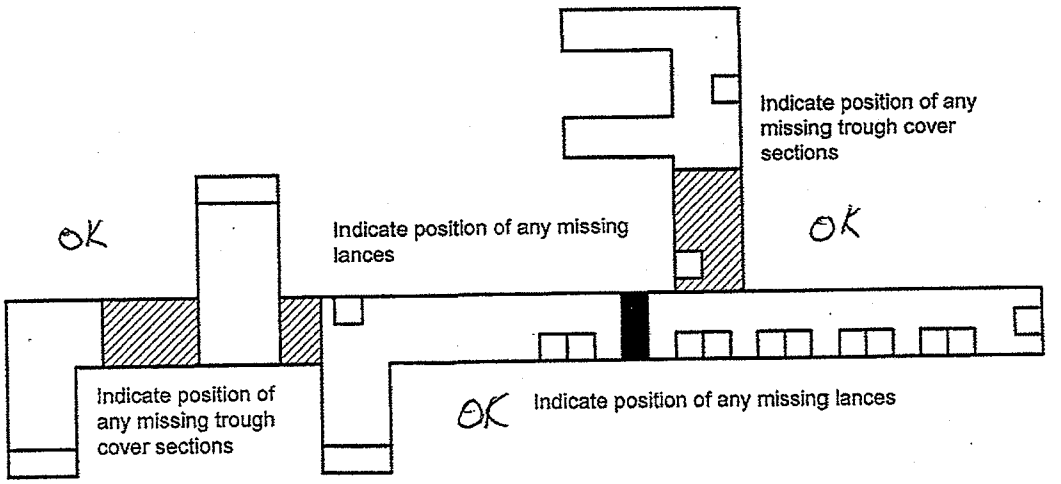

20071107 8BF Inspection Checklist.doc

EPA-R5-2012-0005960000326

4-2

OCS Environmental, Inc.

U.S. Steel Gary Works
Emissions Inspection Summary

Date: 11 / 13 / 07

Start Time: 1125 AM / PM

End Time: 1325 AM / PM

No. 2 Precarbon ESP

BOP	Roof Monitor		Gas Cleaners	
QBOP	Roof Monitor		Gas Cleaners	
Blast Furnace	4	6	8	14
Blast Furnace Top	4	6	8	14

The following events or operations contributed to significant emissions:

Time	Heat/Cast Number	Operation	Comments
No Incidents To Report			

20071107 Inspection Summary.doc

OCS Environmental, Inc.
Method 9 VE Inspection Form

			Start	End
Date:	11/13/07			
Source:	# 8 BF Cm+Stack	Emissions color:	Dark Red	None
Observation Start Time:	1125 A	Background:	Sky	
Observation End Time:	1159 45 A	Sky Conditions:	Cloudy	
Observer's Position:	8 BF	Wind Speed:	5	
Distance to source:	350 YDS	Wind Direction:	S	
Direction to source:	W 310	Ambient Temp:	60°	
		Relative Humidity%:	90%	
Height of source:	55 ft	Wet Bulb Temp:	–	
Vertical angle to source:	6°			

Plume Type: (Attached) Detached None

Comments	0	15	30	45			0	15	30	45	Comments
					0	30	0	0	0	0	
					1	31	0	0	0	0	
					2	32	0	0	0	0	
					3	33	0	0	0	0	
					4	34	0	0	0	0	
					5	35	0	0	0	0	
					6	36	0	0	0	0	
					7	37	0	0	0	0	
					8	38	0	0	0	0	
					9	39	0	0	0	0	
					10	40	0	0	0	0	
					11	41	0	0	0	0	
					12	42	0	0	0	0	
					13	43	0	0	0	0	
					14	44	0	0	0	0	
					15	45	0	0	0	0	
					16	46	0	0	0	0	
					17	47	0	0	0	5	5 Paint BLK
					18	48	5	5	5	0	15 #3167 ✓
					19	49	0	0	0	0	CAST 1 → Probness
					20	50	0	0	0	0	
					21	51	0	0	0	0	
					22	52	0	0	0	0	
1125 A					23	53	0	0	0	0	
					24	54	0	0	0	0	
Begin Observation	0	0	0	0	25	55	0	0	0	0	
	0	0	0	0	26	56	0	0	0	0	
	0	0	0	0	27	57	0	0	0	0	
	0	0	0	0	28	58	0	0	0	0	
	0	0	0	0	29	59	0	0	0	0	

Additional Info (include steam dissipation point)

Observer's Signature

20071107 Method 9 Inspection Form.doc

OCS Environmental, Inc.
Method 9 VE Inspection Form

Date: 11/13/07
Source: # 8 BF Am+Still
Observation Start Time: 1200
Observation End Time: 1254 45 P
Observer's Position: 8 BF 2
Distance to source: 350 YDS
Direction to source: W 310 °

Height of source: 55 ft
Vertical angle to source: 6°

	Start	End
Emissions color:	As Sand	Same
Background:	Sky	
Sky Conditions:	Cloudy	
Wind Speed:	4	
Wind Direction:	S	
Ambient Temp:	60°	
Relative Humidity%:	50%	
Wet Bulb Temp:	-	

Plume Type: Attached Detached None

Comments	0	15	30	45			0	15	30	45	Comments
	0	0	0	0	0	30	0	0	0	0	
	0	0	0	0	1	31	0	0	0	0	
	0	0	0	0	2	32	0	0	0	0	
	0	0	0	0	3	33	0	0	0	0	
	0	0	0	0	4	34	0	0	0	0	
	0	0	0	0	5	35	0	0	0	0	
	0	0	0	0	6	36	0	0	0	0	
	0	0	0	0	7	37	0	0	0	0	
	0	0	0	0	8	38	0	0	0	0	
	0	0	0	0	9	39	0	0	0	0	
	0	0	0	0	10	40	0	0	0	0	
	0	0	0	0	11	41	0	0	0	0	
	0	0	0	0	12	42	0	0	0	0	
	0	0	0	0	13	43	0	0	0	0	
	0	0	0	0	14	44	0	0	0	0	
	0	0	0	0	15	45	0	0	0	0	
	0	0	0	0	16	46	0	0	0	0	
	0	0	0	0	17	47	0	0	0	0	
	0	0	0	0	18	48	0	0	0	0	
	0	0	0	0	19	49	0	0	0	0	
	0	0	0	0	20	50	0	0	0	0	
	0	0	0	0	21	51	0	0	0	0	
	0	0	0	0	22	52	0	0	0	0	
	0	0	0	0	23	53	0	0	0	0	
	0	0	0	0	24	54	0	0	0	0	
	0	0	0	0	25	55	0	0	0	0	
	0	0	0	0	26	56	0	0	0	0	
	0	0	0	0	27	57	0	0	0	0	
	0	0	0	0	28	58	0	0	0	0	
	0	0	0	0	29	59	0	0	0	0	

Additional info (include steam dissipation point)

Observer's Signature

20071107 Method 9 Inspection Form.doc

OCS Environmental, Inc.
Method 9 VE Inspection Form

Page 2 of 3

			Start	End
Date:	11/13/07	Emissions color:	As Solid	Same
Source:	# 8 BF-Cm+Shell	Background:	Sky	
Observation Start Time:	1360	Sky Conditions:	Cloy	
Observation End Time:	1324 59	Wind Speed:	1	
Observer's Position:	8 BF2	Wind Direction:	S	
Distance to source:	250 yds	Ambient Temp:	60	
Direction to source:	W 210 °	Relative Humidity%:	90%	
Height of source:	59 ft	Wet Bulb Temp:	-	
Vertical angle to source:	6 °			

Plume Type: Attached Detached None

Comments	0	15	30	45			0	15	30	45	Comments
	0	0	0	0	0	30					
	0	0	0	0	1	31					
	0	0	0	0	2	32					
	0	0	0	0	3	33					
	0	0	0	0	4	34					
	0	0	0	0	5	35					
	0	0	0	0	6	36					
BLACK PLUG 100	0	60	20	20	7	37					
✓ 105 5	5	0	0	0	8	38					
END CAST	0	0	0	0	9	39					
	0	0	0	0	10	40					
	0	0	0	0	11	41					
	0	0	0	0	12	42					
	0	0	0	0	13	43					
	0	0	0	0	14	44					
	0	0	0	0	15	45					
	0	0	0	0	16	46					
	0	0	0	0	17	47					
	0	0	0	0	18	48					
	0	0	0	0	19	49					
	0	0	0	0	20	50					
	0	0	0	0	21	51					
	0	0	0	0	22	52					
	0	0	0	0	23	53					
	0	0	0	0	24	54					
END OBSERVATION	X	X	X	X	25	55					
					26	56					
					27	57					
					28	58					
					29	59					

105 TOTAL 4.4%

Additional info (include steam dissipation point)

Observer's Signature

20071107 Method 9 Inspection Form.doc

OCS Environmental, Inc.
Method 9 Source Layout Sketch

Date: 11 / 13 / 07

Observer Name: T. Smith

Begin Time: 11:25 A

Time End: 13:24 59 pm

No Sun Visible Times

Observation Point

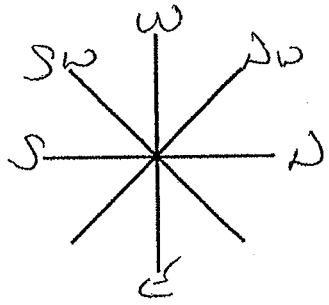

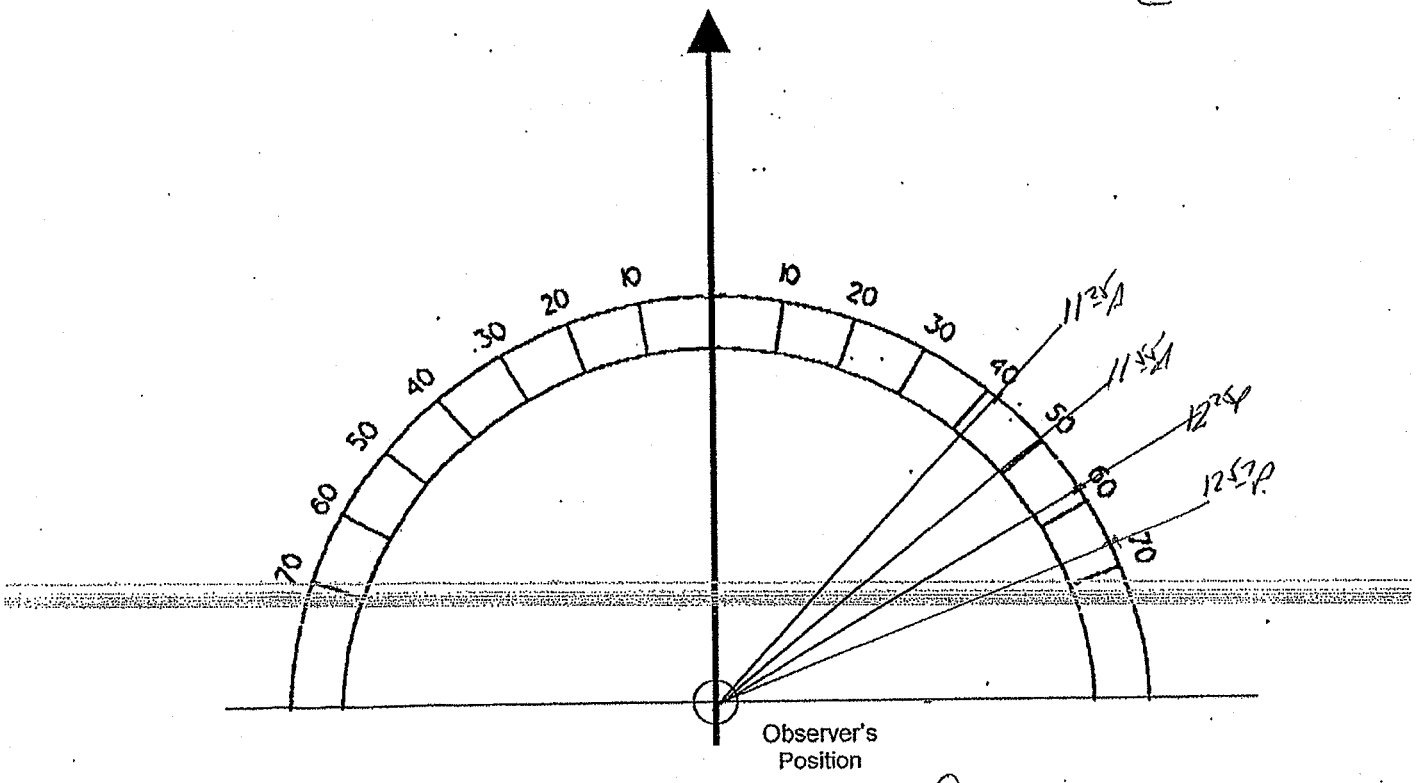

Signature:

20071107 Method 9 Source Layout Sketch.doc

EPA-R5-2012-0005960000326

U.S. Steel Gary Works
No. 8 Blast Furnace
Emissions Observations Checklist

Observer	R. Mackey
Start time	11:48
End Time	1307
Furnace Mgr	

Clay Type	RVR
Begin	
End	
Pushed	90

Date	11-13-07
Cast Number	3167
Cast Tonage	332
Iron Temp	2705
Gas Pressure	65

Mud Gun

	Yes	No
Problems Plugging Hole?	☐	☑
Clay Leaking into trough?	☐	☑

Tap Drill

Problems Opening Hole?	☐	☑
Oxygen Lance Used?	☐	☑

Sub Car Number

Ladle Condition

	Bright Red	Faintly Glowing	Black	Build Up	Smoky
#1	☐	☐	☐	☐	☐
#2	☐	☐	☐	☐	☐
#3	☐	☐	☐	☐	☐
#4	☐	☐	☐	☐	☐
#5	☐	☐	☐	☐	☐
#6	☐	☐	☐	☐	☐
#7	☐	☐	☐	☐	☐

Comments

Date Corrected

Area Blast Furnace Manager

Environmental Manager

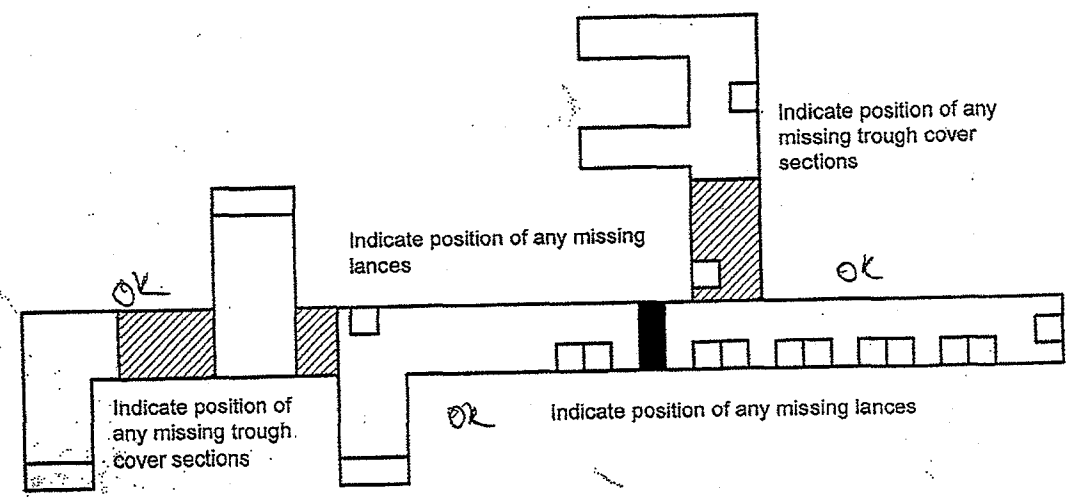

20071107 8BF Inspection Checklist.doc

EPA-USS-0330112

4-3

OCS Environmental, Inc.

U.S. Steel Gary Works
Emissions Inspection Summary

Date: 11/28/07

Start Time: 10:27 AM / PM

End Time: 12:26 AM / PM

No. 2 Precarbon ESP

BOP	Roof Monitor		Gas Cleaners	
QBOP	Roof Monitor		Gas Cleaners	
Blast Furnace	4	6	8	14
Blast Furnace Top	4	6	8	14

The following events or operations contributed to significant emissions:

Time	Heat/Cast Number	Operation	Comments

20071107 Inspection Summary.doc

OCS Environmental, Inc.
Method 9 VE Inspection Form

Page 1 of 3

Date:	11-28-07
Source:	#8BFE
Observation Start Time:	10:27
Observation End Time:	10:59
Observer's Position:	8BF2
Distance to source:	350 yds
Direction to source:	W 310°
Height of source:	59'
Vertical angle to source:	6°

	Start	End
Emissions color:	As-noted	Same
Background:	Sky	↓
Sky Conditions:	Cloudy	↓
Wind Speed:	15-20	↓
Wind Direction:	So.	↓
Ambient Temp:	39	↓
Relative Humidity%:	85%	↓
Wet Bulb Temp:		

Plume Type: Attached Detached None

Comments	0	15	30	45			0	15	30	45	Comments
					0	30	0	0	0	0	
					1	31	0	0	0	0	
					2	32	0	0	0	0	
					3	33	0	0	0	0	
					4	34	0	0	0	0	
					5	35	0	0	0	0	
					6	36	0	0	0	0	
					7	37	0	0	0	0	
					8	38	0	0	0	0	
					9	39	0	0	0	0	
					10	40	0	0	0	0	
					11	41	0	0	0	0	
					12	42	0	0	0	0	
					13	43	0	0	0	0	
					14	44	0	0	0	0	
					15	45	0	0	0	0	
					16	46	0	0	0	0	
					17	47	0	0	0	0	
					18	48	0	0	0	0	
					19	49	0	0	0	0	
					20	50	0	0	0	0	
					21	51	0	0	0	0	
					22	52	0	0	0	0	
					23	53	0	0	0	0	
					24	54	0	0	0	0	
					25	55	0	0	0	0	
					26	56	0	0	0	0	
CAST 3325	0	0	0	0	27	57	0	0	0	0	
	0	0	0	0	28	58	0	0	0	0	
	0	0	0	0	29	59	0	0	0	0	

Additional Info (include steam dissipation point)

CASTB 3325

Observer's Signature

20071107 Method 9 Inspection Form.doc

OCS Environmental, Inc.
Method 9 VE Inspection Form

Date: 11-28-07
Source: #8 BFE
Observation Start Time: 11:00
Observation End Time: 11:59
Observer's Position: 8BF2
Distance to source: 350 YDS
Direction to source: W
310°
Height of source: 59'
Vertical angle to source: 6°

	Start	End
Emissions color:	AS NOTED	
Background:	SKY	
Sky Conditions:	CLOUDY	
Wind Speed:	15-20	
Wind Direction:	SW	
Ambient Temp:	42°	
Relative Humidity%:	85%	
Wet Bulb Temp:		

Plume Type: Attached Detached None

Comments	0	15	30	45			0	15	30	45	Comments
	0	0	0	0	0	30	0	0	0	0	
	0	0	0	0	1	31	0	0	0	0	
	0	0	0	0	2	32	0	0	0	0	
	0	0	0	0	3	33	0	0	0	0	
	0	0	0	0	4	34	0	0	0	0	
	0	0	0	0	5	35	0	0	0	0	
	0	0	0	0	6	36	0	0	0	0	
	0	0	0	0	7	37	0	0	0	0	
	0	0	0	0	8	38	0	0	0	0	END CAST
	0	0	0	0	9	39	0	0	0	0	
	0	0	0	0	10	40	0	0	0	0	
	0	0	0	0	11	41	0	0	0	0	
	0	0	0	0	12	42	0	0	0	0	
	0	0	0	0	13	43	0	0	0	0	
	0	0	0	0	14	44	0	0	0	0	
	0	0	0	0	15	45	0	0	0	0	
	0	0	0	0	16	46	0	0	0	0	
	0	0	0	0	17	47	0	0	0	0	
	0	0	0	0	18	48	0	0	0	0	
	0	0	0	0	19	49	0	0	0	0	
	0	0	0	0	20	50	0	0	0	0	
	0	0	0	0	21	51	0	0	0	0	
	0	0	0	0	22	52	0	0	0	0	
	0	0	0	0	23	53	0	0	0	0	
	0	0	0	0	24	54	0	0	0	0	
	0	0	0	0	25	55	0	0	0	0	
	0	0	0	0	26	56	0	0	0	0	
	0	0	0	0	27	57	0	0	0	0	
	0	0	0	0	28	58	0	0	0	0	
	0	0	0	0	29	59	0	0	0	0	

Additional info (include steam dissipation point)

Observer's Signature

OCS Environmental, Inc.
Method 9 VE Inspection Form

			Start	End
Date:	11-28-07			
Source:	#8 BFC	Emissions color:	As noted	Same
Observation Start Time:	12:00	Background:	Sky	
Observation End Time:	12:26	Sky Conditions:	Cloudy	
Observer's Position:	8BF2	Wind Speed:	15-26	
Distance to source:	350 yds	Wind Direction:	So.	
Direction to source:	W	Ambient Temp:	42°	
	310°	Relative Humidity%:	85%	
Height of source:	59'	Wet Bulb Temp:		
Vertical angle to source:	6°			

Plume Type: Attached Detached None

Comments	0	15	30	45			0	15	30	45	Comments
	0	0	0	0	0	30					
	0	0	0	0	1	31					
	0	0	0	0	2	32					
	0	0	0	0	3	33					
	0	0	0	0	4	34					
	0	0	0	0	5	35					
	0	0	0	0	6	36					
	0	0	0	0	7	37					
	0	0	0	0	8	38					
	0	0	0	0	9	39					
	0	0	0	0	10	40					
	0	0	0	0	11	41					
	0	0	0	0	12	42					
	0	0	0	0	13	43					
	0	0	0	0	14	44					
	0	0	0	0	15	45					
	0	0	0	0	16	46					
	0	0	0	0	17	47					
	0	0	0	0	18	48					
	0	0	0	0	19	49					
	0	0	0	0	20	50					
	0	0	0	0	21	51					
	0	0	0	0	22	52					
	0	0	0	0	23	53					
	0	0	0	0	24	54					
	0	0	0	0	25	55					
END OBSERVATION	0	0	0	0	26	56					
					27	57					
					28	58					
					29	59					

Additional info (include steam dissipation point)

Observer's Signature

OCS Environmental, Inc.
Method 9 Source Layout Sketch

Date: 11/28/07
Observer Name: Chet Ducin
Begin Time: 10:27 Time End: 12:26

No Sun Visible Times
11:00
11:30
12:00

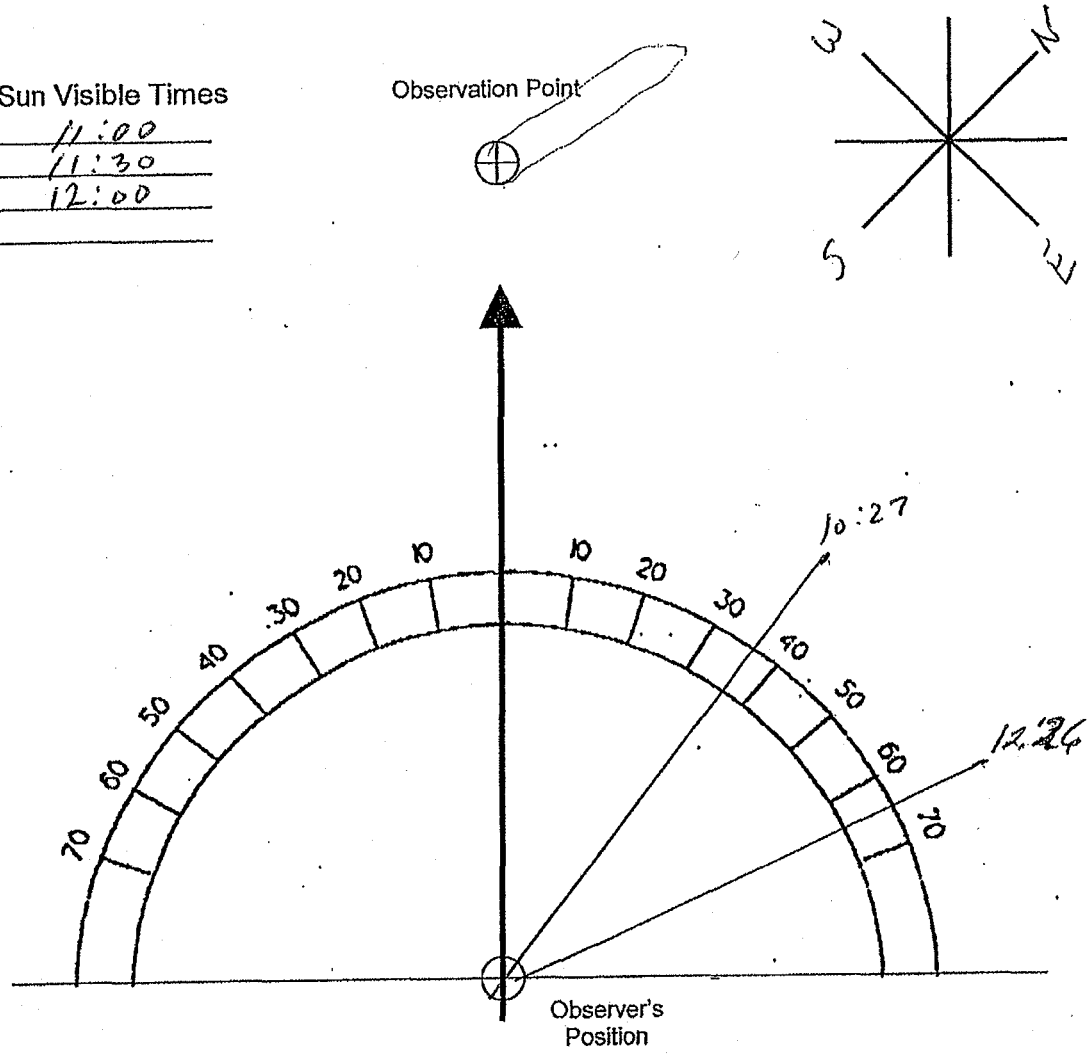

Signature: Chet Ducin

20071107 Method 9 Source Layout Sketch.doc

U.S. Steel Gary Works
No. 8 Blast Furnace
Emissions Observations Checklist

Observer	J. SKALIK	Clay Type	RVR	Date	4-28-07
Start time	1027			Cast Number	9323
End Time	1139	Begin		Cast Tonage	309
Furnace Mgr	✓	End	1.70	Iron Temp	2699
		Pushed		Gas Pressure	5

Mud Gun	Yes	No
Problems Plugging Hole?	☐	☒
Clay Leaking into trough?	☐	☒

Tap Drill		
Problems Opening Hole?	☐	☒
Oxygen Lance Used?	☐	☒

Sub Car Number

Ladle Condition

	Bright Red	Faintly Glowing	Black	Build Up	Smoky
#1	✓				
#2	✓				
#3		✓			
#4					
#5					
#6					
#7					

Comments
ALL DSCs in place in service
Date Corrected
Area Blast Furnace Manager
Environmental Manager

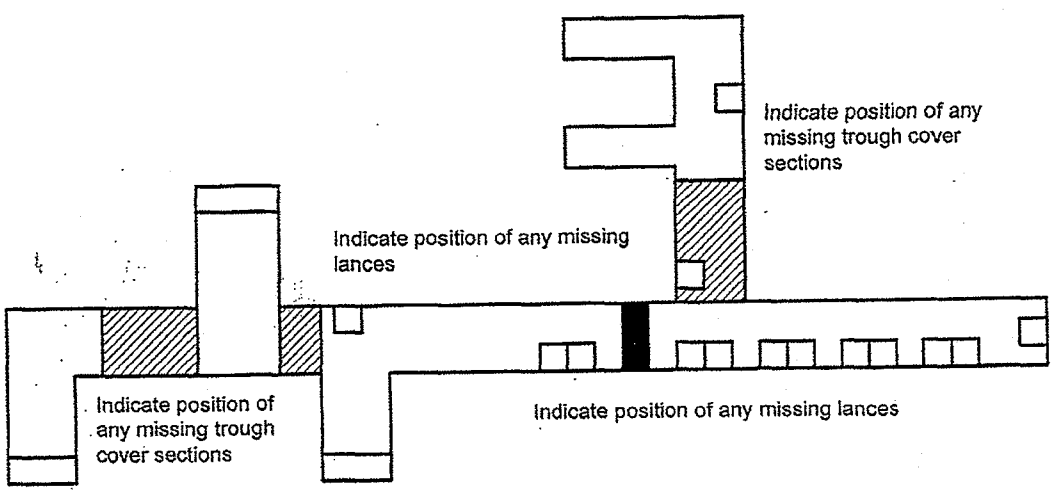

20071107 8BF Inspection Checklist.doc

4-4

OCS Environmental, Inc.

U.S. Steel Gary Works
Emissions Inspection Summary

Date: 12 / 07 / 07

Start Time: 0715 AM / PM

End Time: 0914 AM / PM

No. 2 Precarbon ESP

BOP	Roof Monitor		Gas Cleaners	
QBOP	Roof Monitor		Gas Cleaners	
Blast Furnace	4	6	8	14
Blast Furnace Top	4	6	8	14

The following events or operations contributed to significant emissions:

Time	Heat/Cast Number	Operation	Comments

20071107 Inspection Summary.doc

OCS Environmental, Inc.
Method 9 VE Inspection Form

Page 1 of 3

			Start	End
Date:	12-07-07	Emissions color:	As Noted	
Source:	#8 BAGG	Background:	Sky	Same
Observation Start Time:	0715	Sky Conditions:	CCUY	
Observation End Time:	0759	Wind Speed:	3-9	
Observer's Position:	8B92	Wind Direction:		
Distance to source:	350 yds	Ambient Temp:	25-30	
Direction to source:	West	Relative Humidity%:	90%	
Height of source:	59'	Wet Bulb Temp:	—	
Vertical angle to source:	6°			

Plume Type: Attached Detached None

Comments	0	15	30	45			0	15	30	45	Comments
					0	30	0	0	0	0	
					1	31	0	0	0	0	
					2	32	0	0	0	0	
					3	33	0	0	0	0	
					4	34	0	0	0	0	
					5	35	0	0	0	0	
					6	36	0	0	0	0	
					7	37	0	0	0	0	
					8	38	0	0	0	0	
					9	39	0	0	0	0	
					10	40	0	0	0	0	
					11	41	0	0	0	0	
					12	42	0	0	0	0	
					13	43	0	0	0	0	
					14	44	0	0	0	0	
	0	0	0	0	15	45	0	0	0	0	
	0	0	0	0	16	46	0	0	0	0	
	0	0	0	0	17	47	0	0	0	0	
	0	0	0	0	18	48	0	0	0	0	
BLK-Shell	0	0	25	35	19	49	0	0	0	0	
	25	15	10	0	20	50	0	0	0	0	
	0	0	0	0	21	51	0	0	0	0	
	0	0	0	0	22	52	0	0	0	0	
	0	0	0	0	23	53	0	0	0	0	
	0	0	0	0	24	54	0	0	0	0	
	0	0	0	0	25	55	0	0	0	0	
	0	0	0	0	26	56	0	0	0	0	
	0	0	0	0	27	57	0	0	0	0	
	0	0	0	0	28	58	0	0	0	0	
	0	0	0	0	29	59	0	0	0	0	

Additional info (include steam dissipation point)

Observer's Signature [signature]

20071107 Method 9 Inspection Form.doc

OCS Environmental, Inc.
Method 9 VE Inspection Form

			Start	End
Date:	12-07-07	Emissions color:	ASHY	
Source:	#8 RACE	Background:	SKY	SAME
Observation Start Time:	0800	Sky Conditions:	CLR	
Observation End Time:	0859	Wind Speed:	3-9	
Observer's Position:	BRR2	Wind Direction:	SW	
Distance to source:	350 yds	Ambient Temp:	26-31	
Direction to source:	WEST	Relative Humidity%:	90 %	
		Wet Bulb Temp:		
Height of source:	59'			
Vertical angle to source:	6°			

Plume Type: (Attached) Detached None

Comments	0	15	30	45			0	15	30	45	Comments
	0	0	0	0	0	30	0	0	0	0	
	0	0	0	0	1	31	0	0	0	0	
	0	0	0	0	2	32	0	0	0	0	
	0	0	0	0	3	33	0	0	0	0	
	0	0	0	0	4	34	0	0	0	0	
	0	0	0	0	5	35	0	0	0	0	
	0	0	0	0	6	36	0	0	0	0	
	0	0	0	0	7	37	0	0	0	0	
	0	0	0	0	8	38	0	0	0	0	
	0	0	0	0	9	39	0	0	0	0	
	0	0	0	0	10	40	0	0	0	0	
	0	0	0	0	11	41	0	0	0	0	
	0	0	0	0	12	42	0	0	0	0	
	0	0	0	0	13	43	0	0	0	0	
	0	0	0	0	14	44	0	0	0	0	
	0	0	0	0	15	45	0	0	0	0	
	0	0	0	0	16	46	0	0	0	0	
	0	0	0	0	17	47	0	0	0	0	
	0	0	0	0	18	48	0	0	0	0	
	0	0	0	0	19	49	0	0	0	0	
	0	0	0	0	20	50	0	0	0	0	
	0	0	0	0	21	51	0	0	0	0	
	0	0	0	0	22	52	0	0	0	0	
	0	0	0	0	23	53	0	0	0	0	
	0	0	0	0	24	54	0	0	0	0	
	0	0	0	0	25	55	0	0	0	0	
	0	0	0	0	26	56	0	0	0	0	
	0	0	0	0	27	57	0	0	0	0	
	0	0	0	0	28	58	0	0	0	0	
	0	0	0	0	29	59	0	0	0	0	

Additional info (include steam dissipation point)

Observer's Signature

20071107 Method 9 Inspection Form.doc

OCS Environmental, Inc.
Method 9 VE Inspection Form

Date: 12-07-07
Source: #8 BACE
Observation Start Time: 0900
Observation End Time: 0914
Observer's Position: 8B72
Distance to source: 350 yds
Direction to source: West

Height of source: 59'
Vertical angle to source: 6°

	Start	End
Emissions color:	As Noted	
Background:	Sky	Same
Sky Conditions:	Clear	
Wind Speed:	3-9	
Wind Direction:	SW	
Ambient Temp:	32-35	
Relative Humidity%:	90%	
Wet Bulb Temp:		

Plume Type: Attached Detached None

Comments	0	15	30	45			0	15	30	45	Comments
	0	0	0	0	0	30					
	0	0	0	0	1	31					
	0	0	0	0	2	32					
	0	0	0	0	3	33					
	0	0	0	0	4	34					
	0	0	0	0	5	35					
	0	0	0	0	6	36					
	0	0	0	0	7	37					
	0	0	0	0	8	38					
	0	0	0	0	9	39					
	0	0	0	0	10	40					
	0	0	0	0	11	41					
	0	0	0	0	12	42					
	0	0	0	0	13	43					
	0	0	0	0	14	44					
					15	45					
					16	46					
					17	47					
					18	48					
					19	49					
					20	50					
					21	51					
					22	52					
					23	53					
					24	54					
					25	55					
					26	56					
					27	57					
					28	58					
					29	59					

Additional info (include steam dissipation point)

Observer's Signature

20071107 Method 9 Inspection Form.doc

OCS Environmental, Inc.
Method 9 Source Layout Sketch

Date: 12 10/1 07

Observer Name: J. SKALK

Begin Time: 0715

Time End: 0914

No Sun Visible Times
0715
0815

Observation Point

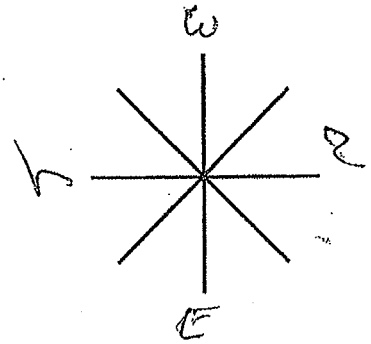

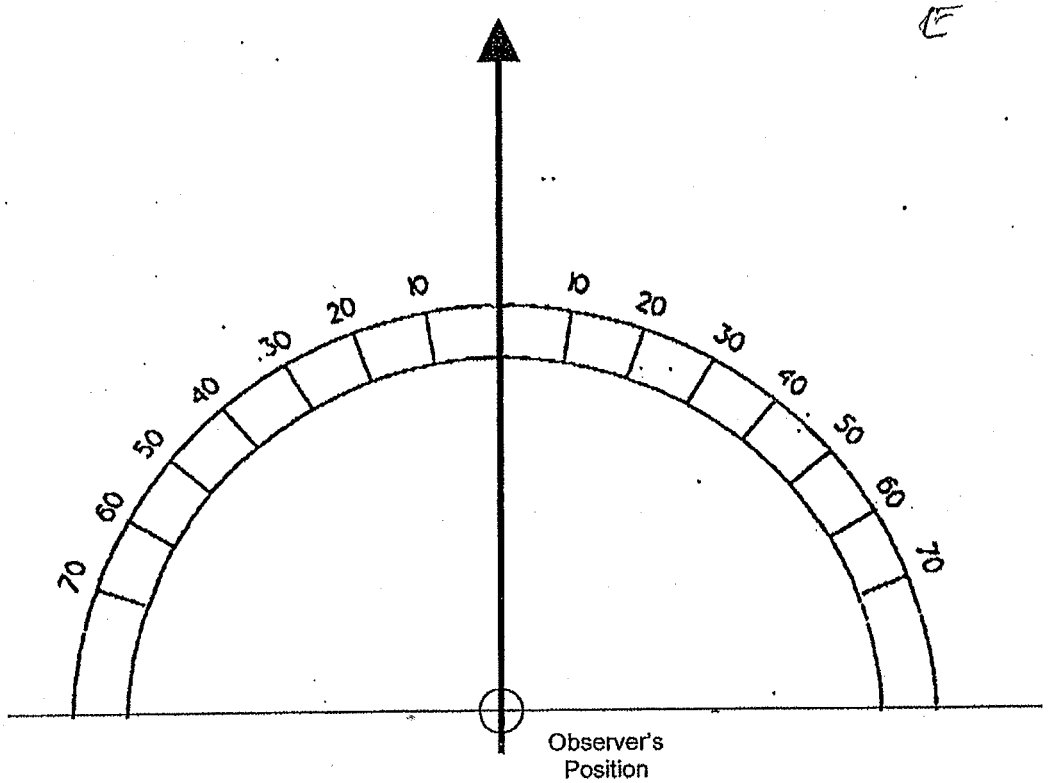

Signature:

20071107 Method 9 Source Layout Sketch.doc

4-5

OCS Environmental, Inc.

U.S. Steel Gary Works
Emissions Inspection Summary

Date: 11 / 19 / 07

Start Time: 0700 (AM) / PM

End Time: 0900 (AM) / PM

No. 2 Precarbon ESP

BOP	Roof Monitor		Gas Cleaners	
QBOP	Roof Monitor		Gas Cleaners	
Blast Furnace	4	6	(8)	14
Blast Furnace Top	4	6	8	14

The following events or operations contributed to significant emissions:

Time	Heat/Cast Number	Operation	Comments
No Exceedences:	Lite Emissions	Observed	

20071107 Inspection Summary.doc

OCS Environmental, Inc.
Method 9 VE Inspection Form

Page 1 of 2

			Start	End
Date:	11-19-07			
Source:	#8BF Roof/Shell	Emissions color:	As Noted	Same
Observation Start Time:	0700	Background:	Sky	
Observation End Time:	0759	Sky Conditions:	Overcast	
Observer's Position:	8BF1	Wind Speed:	7	
Distance to source:	320 yds	Wind Direction:	South	
Direction to source:	NW 318°	Ambient Temp:	40°	
	Mag North	Relative Humidity%:	100	
Height of source:	59'	Wet Bulb Temp:	—	
Vertical angle to source:	3°			

Plume Type: Attached Detached None

Comments	0	15	30	45			0	15	30	45	Comments
Cast #3226	0	0	0	0	0	30	0	0	0	0	
In Progress	0	0	0	0	1	31	0	0	0	0	
	0	0	0	0	2	32	0	0	0	0	
	0	0	0	0	3	33	0	0	0	0	
	0	0	0	0	4	34	0	0	0	0	
	0	0	0	0	5	35	0	0	0	0	
	0	0	0	0	6	36	0	0	0	0	
	0	0	0	0	7	37	0	0	0	0	
	0	0	0	0	8	38	0	0	0	0	
	0	0	0	0	9	39	0	0	0	0	
	0	0	0	0	10	40	0	0	0	0	
	0	0	0	0	11	41	0	0	0	0	
	0	0	0	0	12	42	0	0	0	0	
	0	0	0	0	13	43	0	0	0	0	
	0	0	0	0	14	44	0	0	0	0	
	0	0	0	0	15	45	0	0	0	0	
	0	0	0	0	16	46	0	0	0	0	
	0	0	0	0	17	47	0	0	0	0	
	0	0	0	0	18	48	0	0	0	0	
	0	0	0	0	19	49	0	0	0	0	
	0	0	0	0	20	50	0	0	0	0	
	0	0	0	0	21	51	0	0	0	0	
	0	0	0	0	22	52	0	0	0	0	
	0	0	0	0	23	53	0	0	0	0	
	0	0	0	0	24	54	0	0	0	0	
	0	0	0	0	25	55	0	0	0	0	
	0	0	0	0	26	56	0	0	0	0	
	0	0	0	0	27	57	0	0	0	0	
	0	0	0	0	28	58	0	0	0	0	
	0	0	0	0	29	59	0	0	0	0	

Additional info (include steam dissipation point)

Observer's Signature: Kevin Davis

20071107 Method 9 Inspection Form.doc

OCS Environmental, Inc.
Method 9 VE Inspection Form

			Start	End
Date:	11-19-07			
Source:	#8BF ROOF/SHELL	Emissions color:	As Noted	SAME
Observation Start Time:	0800	Background:	Sky	↓
Observation End Time:	0859	Sky Conditions:	Overcast	↓
Observer's Position:	88F1	Wind Speed:	7	↓
Distance to source:	320yds	Wind Direction:	South	↓
Direction to source:	NW 318°	Ambient Temp:	40°	↓
	Mag North	Relative Humidity%:	100	↓
Height of source:	59'	Wet Bulb Temp:	–	↓
Vertical angle to source:	3°			

Plume Type: (Attached) Detached None

Comments	0	15	30	45			0	15	30	45	Comments
	0	0	0	0	0	30	0	0	0	0	
	0	0	0	0	1	31	0	0	0	0	
Brown	0	0	15	15	2	32	0	0	0	0	
to Black	15	20	25	10	3	33	0	0	0	0	
"	5	0	0	0	4	34	0	0	0	0	
[illegible]	0	0	0	0	5	35	0	0	0	0	
	0	0	0	0	6	36	0	0	0	0	
	0	0	0	0	7	37	0	0	0	0	
End Cost #3226	0	0	0	0	8	38	0	0	0	0	
	0	0	0	0	9	39	0	0	0	0	
	0	0	0	0	10	40	0	0	0	0	
	0	0	0	0	11	41	0	0	0	0	
	0	0	0	0	12	42	0	0	0	0	
	0	0	0	0	13	43	0	0	0	0	
	0	0	0	0	14	44	0	0	0	0	
	0	0	0	0	15	45	0	0	0	0	
	0	0	0	0	16	46	0	0	0	0	
	0	0	0	0	17	47	0	0	0	0	
	0	0	0	0	18	48	0	0	0	0	
	0	0	0	0	19	49	0	0	0	0	
	0	0	0	0	20	50	0	0	0	0	
	0	0	0	0	21	51	0	0	0	0	
	0	0	0	0	22	52	0	0	0	0	
	0	0	0	0	23	53	0	0	0	0	
	0	0	0	0	24	54	0	0	0	0	
	0	0	0	0	25	55	0	0	0	0	
	0	0	0	0	26	56	0	0	0	0	
	0	0	0	0	27	57	0	0	0	0	
	0	0	0	0	28	58	0	0	0	0	
	0	0	0	0	29	59	0	0	0	0	

Additional info (include steam dissipation point)

Observer's Signature: Kevin Davis

20071107 Method 9 Inspection Form.doc

OCS Environmental, Inc.
Method 9 Source Layout Sketch

Date: 11 / 19 / 07

Observer Name: K. Davis

Begin Time: 0700 Time End: 0900

No Sun Visible Times
0700
0730
0800
0830

Observation Point

South @ 7mph

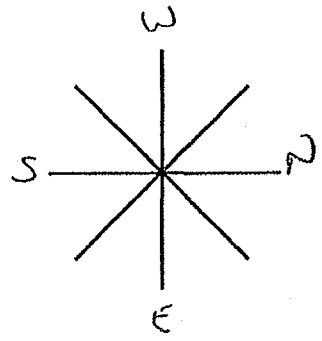

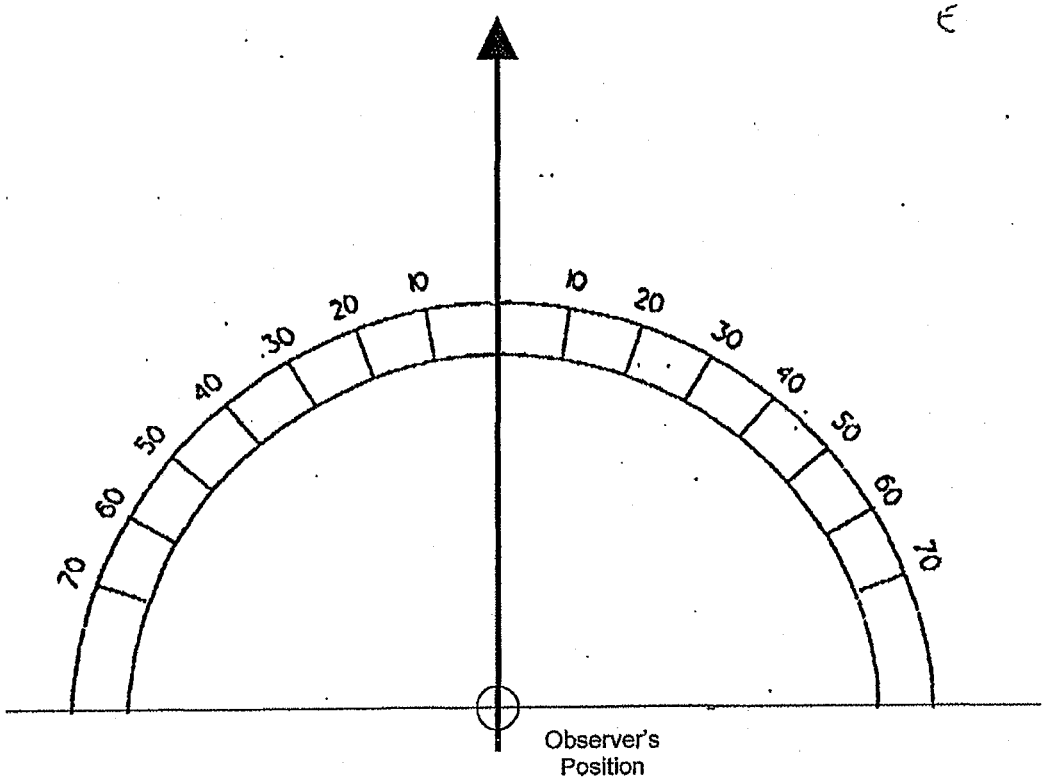

Signature: Kevin Davis

20071107 Method 9 Source Layout Sketch.doc

U.S. Steel Gary Works
No. 8 Blast Furnace
Emissions Observations Checklist

Observer	J. Scalia	Clay Type	RVR	Date	11-19-07
Start time	in progress			Cast Number	3226
End Time	0808	Begin		Cast Tonage	472
Furnace Mgr	/	End	/ /	Iron Temp	2698
		Pushed		Gas Pressure	65

Mud Gun	Yes	No
Problems Plugging Hole?	☐	☒
Clay Leaking into trough?	☐	☒

Tap Drill		
Problems Opening Hole?	☐ N	☐
Oxygen Lance Used?	☐ A	☐

Sub Car Number

Ladle Condition

	Bright Red	Faintly Glowing	Black	Build Up	Smoky
#1	✓				
#2	✓				
#3		✓			
#4					
#5					
#6					
#7					

Comments

ALL 25 CS in place & in service

Date Corrected

Area Blast Furnace Manager

Environmental Manager

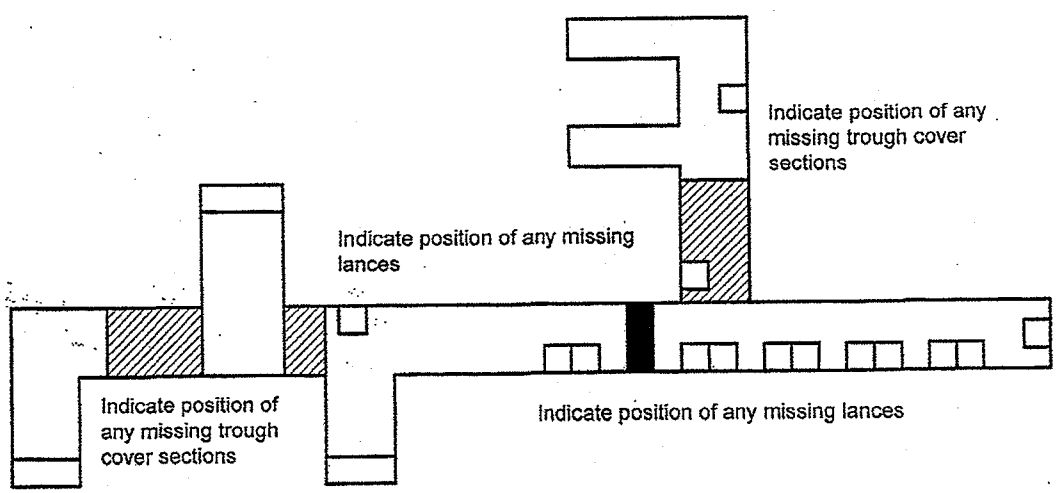

20071107 8BF Inspection Checklist.doc

4-6

OCS Environmental, Inc.

U.S. Steel Gary Works
Emissions Inspection Summary

Date: 11/27/07

Start Time: 0730 00 AM / PM

End Time: 0929 45 AM / PM

No. 2 Precarbon ESP

BOP	Roof Monitor		Gas Cleaners	
QBOP	Roof Monitor		Gas Cleaners	
Blast Furnace	4	6	8	14
Blast Furnace Top	4	6	8	14

The following events or operations contributed to significant emissions:

Time	Heat/Cast Number	Operation	Comments

20071107 Inspection Summary.doc

OCS Environmental, Inc.
Method 9 VE Inspection Form

Date:	11-27-07
Source:	#4 BF
Observation Start Time:	0730 00
Observation End Time:	0759 45
Observer's Position:	4 BF 1
Distance to source:	320'
Direction to source:	NW
Height of source:	59'
Vertical angle to source:	

	Start	End
Emissions color:	AS NOTED	SAME
Background:	SKY	
Sky Conditions:	CLEAR	
Wind Speed:	5-10	
Wind Direction:	SW	
Ambient Temp:	30°	
Relative Humidity%:	90%	
Wet Bulb Temp:		

Plume Type: Attached Detached None

Comments	0	15	30	45			0	15	30	45	Comments
CAST 3312					0	30	0	0	0	0	
IN PROGRESS					1	31	0	0	0	0	
					2	32	0	0	0	0	
					3	33	0	0	0	0	
					4	34	0	0	0	0	
					5	35	0	0	0	0	
					6	36	0	0	0	0	
					7	37	0	0	0	0	
					8	38	0	0	0	0	
					9	39	0	0	0	0	
					10	40	0	0	0	0	
					11	41	0	0	0	0	
					12	42	0	0	0	0	
					13	43	0	0	0	0	
					14	44	0	0	0	0	
					15	45	0	0	0	0	
					16	46	0	0	0	0	
					17	47	0	0	0	0	
					18	48	0	0	0	0	
					19	49	0	0	0	0	
					20	50	0	0	0	0	
					21	51	0	0	0	0	
					22	52	0	0	0	0	
					23	53	0	0	0	0	
					24	54	0	0	0	0	
					25	55	0	0	0	0	
					26	56	0	0	0	0	
					27	57	0	0	0	0	
					28	58	0	0	0	0	
					29	59	0	0	0	0	

Additional info (include steam dissipation point)

Observer's Signature: J. Johnson

20071107 Method 9 Inspection Form.doc

OCS Environmental, Inc.
Method 9 VE Inspection Form

Page 2 of 3

Date: 11-27-07
Source: #8 BF
Observation Start Time: 0800 00
Observation End Time: 0859 43
Observer's Position: BBF1
Distance to source: 320
Direction to source: NW

Height of source: 59'
Vertical angle to source: 3°

	Start	End
Emissions color:	AS NOTED	SAME
Background:	SKY	
Sky Conditions:	CLEAR	
Wind Speed:	5-10	
Wind Direction:	SW	
Ambient Temp:	30	
Relative Humidity%:	90%	
Wet Bulb Temp:		

Plume Type: Attached Detached None

Comments	0	15	30	45			0	15	30	45	Comments
	0	0	0	0	0	30	0	0	0	0	
	0	0	0	0	1	31	0	0	0	0	
	0	0	0	0	2	32	0	0	0	0	
	0	0	0	0	3	33	0	0	0	0	
	0	0	0	0	4	34	0	0	0	0	
	0	0	0	0	5	35	0	0	0	0	
PLUG HOLE	0	0	0	0	6	36	0	0	0	0	
	0	0	0	0	7	37	0	0	0	0	
	0	0	0	0	8	38	0	0	0	0	
	0	0	0	0	9	39	0	0	0	0	
	0	0	0	0	10	40	0	0	0	0	
	0	0	0	0	11	41	0	0	0	0	
	0	0	0	0	12	42	0	0	0	0	
	0	0	0	0	13	43	0	0	0	0	
	0	0	0	0	14	44	0	0	0	0	
	0	0	0	0	15	45	0	0	0	0	
	0	0	0	0	16	46	0	0	0	0	
	0	0	0	0	17	47	0	0	0	0	
	0	0	0	0	18	48	0	0	0	0	
	0	0	0	0	19	49	0	0	0	0	START CAST 3317
	0	0	0	0	20	50	0	0	0	0	
	0	0	0	0	21	51	0	0	0	0	
	0	0	0	0	22	52	0	0	0	0	
	0	0	0	0	23	53	0	0	0	0	
	0	0	0	0	24	54	0	0	0	0	
	0	0	0	0	25	55	0	0	0	0	
	0	0	0	0	26	56	0	0	0	0	
	0	0	0	0	27	57	0	0	0	0	
	0	0	0	0	28	58	0	0	0	0	
	0	0	0	0	29	59	0	0	0	0	

Additional info (include steam dissipation point)

Observer's Signature: J. Johnson

20071107 Method 9 Inspection Form.doc

OCS Environmental, Inc.
Method 9 VE Inspection Form

			Start	End
Date:	11-27-07			
Source:	# 8 BF	Emissions color:	AS NOTED	SAME
Observation Start Time:	0900 00	Background:	SKY	
Observation End Time:	0929 45	Sky Conditions:	CLEAR	
Observer's Position:	BBF1	Wind Speed:	5-10	
Distance to source:	320	Wind Direction:	SW	
Direction to source:	NW	Ambient Temp:	31°C	
		Relative Humidity%:	90%	
Height of source:	59	Wet Bulb Temp:		
Vertical angle to source:	3°			

Plume Type: (Attached) Detached None

Comments	0	15	30	45			0	15	30	45	Comments
	0	0	0	0	0	30					
	0	0	0	0	1	31					
	0	0	0	0	2	32					
	0	0	0	0	3	33					
	0	0	0	0	4	34					
	0	0	0	0	5	35					
	0	0	0	0	6	36					
	0	0	0	0	7	37					
	0	0	0	0	8	38					
	0	0	0	0	9	39					
	0	0	0	0	10	40					
	0	0	0	0	11	41					
	0	0	0	0	12	42					
	0	0	0	0	13	43					
	0	0	0	0	14	44					
	0	0	0	0	15	45					
	0	0	0	0	16	46					
	0	0	0	0	17	47					
	0	0	0	0	18	48					
	0	0	0	0	19	49					
	0	0	0	0	20	50					
	0	0	0	0	21	51					
	0	0	0	0	22	52					
	0	0	0	0	23	53					
	0	0	0	0	24	54					
	0	0	0	0	25	55					
	0	0	0	0	26	56					
	0	0	0	0	27	57					
	0	0	0	0	28	58					
	0	0	0	0	29	59					

Additional info (include steam dissipation point)

Observer's Signature

20071107 Method 9 Inspection Form.doc

OCS Environmental, Inc.
Method 9 Source Layout Sketch

Date: 11/27/07

Observer Name: J. Johnson

Begin Time: 0730 00

Time End: 0929 45

No Sun Visible Times

Observation Point BAND SHELL

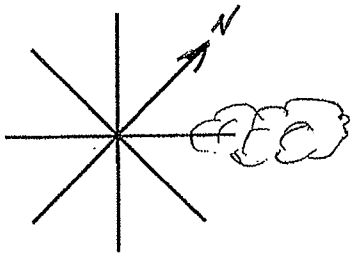

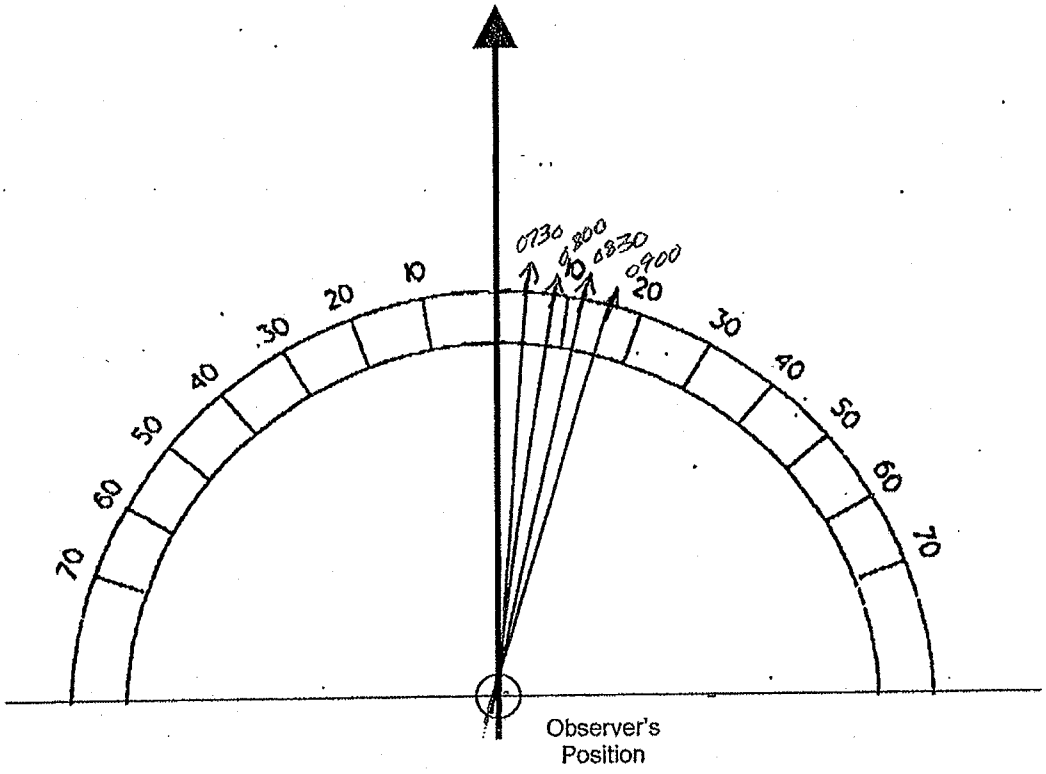

Signature: J. Johnson

20071107 Method 9 Source Layout Sketch.doc

4-7

OCS Environmental, Inc.

U.S. Steel Gary Works
Emissions Inspection Summary

Date: 11/20/2007

Start Time: 1300 AM / PM

End Time: 1500 AM / PM

BOP	Roof Monitor		Gas Cleaners	
QBOP	Roof Monitor		Gas Cleaners	
Blast Furnace	4	6	8	14
Blast Furnace Top	4	6	8	14

The following events or operations contributed to significant emissions:

Time	Heat/Cast Number	Operation	Comments

Jon Simpson

20071107 Inspection Summary.doc

OCS Environmental, Inc.
Method 9 VE Inspection Form

Page 1 of 2

Date:	11/20/07
Source:	8 BLAST FURNACE
Observation Start Time:	1300
Observation End Time:	1359 45
Observed Point:	8BF1
Distance to source:	520 yards
Direction to source:	NW
Height of source:	69'
Vertical angle to source:	3°

	Start	End
Emissions color:	AS NOTED	SAME
Background:	8 Ky	
Sky Conditions:	Fog, OVERCAST	
Wind Speed:	3	
Wind Direction:	NE	
Ambient Temp:	47°	48
Relative Humidity%:	100%	↓
Wet Bulb Temp:	—	—

Plume Type: Attached Detached None

Comments	0	15	30	45			0	15	30	45	Comments
CAST# 3239	0	0	0	0	0	30	0	0	0	0	
INPROGRESS	0	0	0	0	1	31	0	0	0	0	
	0	0	0	0	2	32	0	0	0	0	
	0	0	0	0	3	33	0	0	0	0	
	0	0	0	0	4	34	0	0	0	0	
	0	0	0	0	5	35	0	0	0	0	
	0	0	0	0	6	36	0	0	0	0	
	0	0	0	0	7	37	0	0	0	0	
	0	0	0	0	8	38	0	0	0	0	plugging
	0	0	0	0	9	39	0	0	0	0	
	0	0	0	0	10	40	0	0	0	0	
	0	0	0	0	11	41	0	0	0	0	
	0	0	0	0	12	42	0	0	0	0	
	0	0	0	0	13	43	0	0	0	0	
	0	0	0	0	14	44	0	0	0	0	
	0	0	0	0	15	45	0	0	0	0	
	0	0	0	0	16	46	0	0	0	0	
	0	0	0	0	17	47	0	0	0	0	
	0	0	0	0	18	48	0	0	0	0	
	0	0	0	0	19	49	0	0	0	0	
	0	0	0	0	20	50	0	0	0	0	
	0	0	0	0	21	51	0	0	0	0	
	0	0	0	0	22	52	0	0	0	0	
	0	0	0	0	23	53	0	0	0	0	
	0	0	0	0	24	54	0	0	0	0	
	0	0	0	0	25	55	0	0	0	0	
	0	0	0	0	26	56	0	0	0	0	
	0	0	0	0	27	57	0	0	0	0	
	0	0	0	0	28	58	0	0	0	0	
	0	0	0	0	29	59	0	0	0	0	

Additional info (include steam dissipation point)

Observer's Signature: Jon Simpson

20071107 Method 9 Inspection Form.doc

OCS Environmental, Inc.
Method 9 VE Inspection Form

Date: 11/20/07
Source: 8 BLAST FUR
Observation Start Time: 1400
Observation End Time: 1459 45
Observed Point: 98 F1
Distance to source: 320 yards
Direction to source: NW

Height of source: 69'
Vertical angle to source: 3°

	Start	End
Emissions color:	AS NOTED	SAME
Background:	sky	
Sky Conditions:	OVERCAST	
Wind Speed:	3	
Wind Direction:	NE	
Ambient Temp:	48°	
Relative Humidity%:	100%	
Wet Bulb Temp:	—	—

Plume Type: Attached Detached None

Comments	0	15	30	45			0	15	30	45	Comments
	0	0	0	0	0	30	0	0	0	0	
	0	0	0	0	1	31	0	0	0	0	
	0	0	0	0	2	32	0	0	0	0	
	0	0	0	0	3	33	0	0	0	0	
	0	0	0	0	4	34	0	0	0	0	
	0	0	0	0	5	35	0	0	0	0	
	0	0	0	0	6	36	0	0	0	0	
	0	0	0	0	7	37	0	0	0	0	
	0	0	0	0	8	38	0	0	0	0	
CAST # 32 40	0	0	0	0	9	39	0	0	0	0	
Drill up	0	0	0	0	10	40	0	0	0	0	
	0	0	0	0	11	41	0	0	0	0	
	0	0	0	0	12	42	0	0	0	0	
	0	0	0	0	13	43	0	0	0	0	
	0	0	0	0	14	44	0	0	0	0	
	0	0	0	0	15	45	0	0	0	0	
	0	0	0	0	16	46	0	0	0	0	
	0	0	0	0	17	47	0	0	0	0	
	0	0	0	0	18	48	0	0	0	0	
	0	0	0	0	19	49	0	0	0	0	
	0	0	0	0	20	50	0	0	0	0	
	0	0	0	0	21	51	0	0	0	0	
	0	0	0	0	22	52	0	0	0	0	
	0	0	0	0	23	53	0	0	0	0	
	0	0	0	0	24	54	0	0	0	0	
	0	0	0	0	25	55	0	0	0	0	
	0	0	0	0	26	56	0	0	0	0	
	0	0	0	0	27	57	0	0	0	0	
	0	0	0	0	28	58	0	0	0	0	
	0	0	0	0	29	59	0	0	0	0	

Additional info (include steam dissipation point)

Observer's Signature: Jon Simpson

20071107 Method 9 Inspection Form.doc

OCS Environmental, Inc.
Method 9 Source Layout Sketch

Date: 11/20/2007
Observer Name: Jon Simpson
Begin Time: 1300 Time End: 1500

No Sun Visible Times
1300, 1330, 1400, 1430, 1500

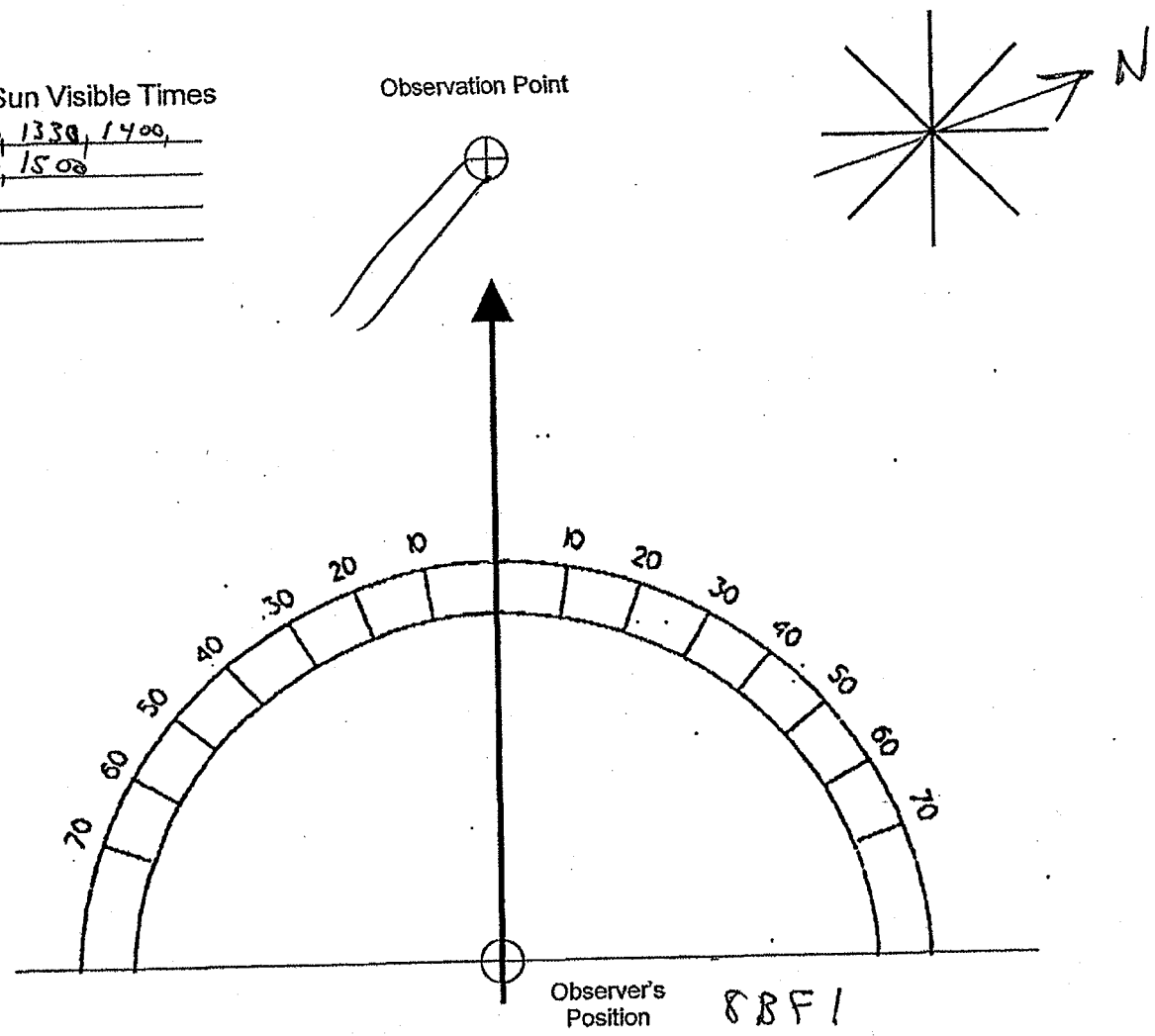

Signature: Jon Simpson

20071107 Method 9 Source Layout Sketch.doc

4-8

OCS Environmental, Inc.

U.S. Steel Gary Works
Emissions Inspection Summary

Date: 12 / 6 / 07

Start Time: 0730 AM / PM

End Time: 0930 AM / PM

No. 2 Precarbon ESP

BOP	Roof Monitor		Gas Cleaners	
QBOP	Roof Monitor		Gas Cleaners	
Blast Furnace	4	6	8	14
Blast Furnace Top	4	6	8	14

The following events or operations contributed to significant emissions:

Time	Heat/Cast Number	Operation	Comments

20071107 Inspection Summary.doc

OCS Environmental, Inc.
Method 9 VE Inspection Form

Page 1 of 2

Date: 12/6/07
Source: BF 8 cm
Observation Start Time: 0730
Observation End Time: 0830
Observer's Position: 8DF1
Distance to source: 320
Direction to source: NW

Height of source: 59
Vertical angle to source: 3

	Start	End
Emissions color:	Aerated	Same
Background:	vky	
Sky Conditions:	PC	
Wind Speed:	3	
Wind Direction:	vW	
Ambient Temp:	8	
Relative Humidity%:	100	
Wet Bulb Temp:		

Plume Type: (Attached) Detached None

Comments	0	15	30	45			0	15	30	45	Comments
	0	0	0	0	0	30	0	0	0	0	
	0	0	0	0	1	31	0	0	0	0	
	0	0	0	0	2	32	0	0	0	0	
	0	0	0	0	3	33	0	0	0	0	
	0	0	0	0	4	34	0	0	0	0	
	0	0	0	0	5	35	0	0	0	0	
	0	0	0	0	6	36	0	0	0	0	
	0	0	0	0	7	37	0	0	0	0	
	0	0	0	0	8	38	0	0	0	0	
	0	0	0	0	9	39	0	0	0	0	
	0	0	0	0	10	40	0	0	0	0	
	0	0	0	0	11	41	0	0	0	0	
	0	0	0	0	12	42	0	0	0	0	
	0	0	0	0	13	43	0	0	0	0	
	0	0	0	0	14	44	0	0	0	0	
	0	0	0	0	15	45	0	0	0	0	
	0	0	0	0	16	46	0	0	0	0	
	0	0	0	0	17	47	0	0	0	0	
	0	0	0	0	18	48	0	0	0	0	
	0	0	0	0	19	49	0	0	0	0	
	0	0	0	0	20	50	0	0	0	0	
	0	0	0	0	21	51	0	0	0	0	
	0	0	0	0	22	52	0	0	0	0	
	0	0	0	0	23	53	0	0	0	0	
	0	0	0	0	24	54	0	0	0	0	
	0	0	0	0	25	55	0	0	0	0	
	0	0	0	0	26	56	0	0	0	0	
	0	0	0	0	27	57	0	0	0	0	
	0	0	0	0	28	58	0	0	0	0	
	0	0	0	0	29	59	0	0	0	0	

Additional info (include steam dissipation point)

Observer's Signature: Clarence Patterson

20071107 Method 9 Inspection Form.doc

OCS Environmental, Inc.
Method 9 VE Inspection Form

Date: 12/6/07
Source: BF8 RM
Observation Start Time: 0830
Observation End Time: 0930
Observer's Position: 8 BF1
Distance to source: 320
Direction to source: NW

Height of source: 59
Vertical angle to source: 3

	Start	End
Emissions color:	As noted	Same
Background:	sky	
Sky Conditions:	PC	
Wind Speed:	3	
Wind Direction:	SW	
Ambient Temp:	8	
Relative Humidity%:	100	
Wet Bulb Temp:		

Plume Type: Attached Detached None

Comments	0	15	30	45			0	15	30	45	Comments
	0	0	0	0	0	30	0	0	0	0	
	0	0	0	0	1	31	0	0	0	0	
	0	0	0	0	2	32	0	0	0	0	
	0	0	0	0	3	33	0	0	0	0	
	0	0	0	0	4	34	0	0	0	0	
	0	0	0	0	5	35	0	0	0	0	
	0	0	0	0	6	36	0	0	0	0	
	0	0	0	0	7	37	0	0	0	0	
	0	0	0	0	8	38	0	0	0	0	
	0	0	0	0	9	39	0	0	0	0	
	0	0	0	0	10	40	0	0	0	0	
	0	0	0	0	11	41	0	0	0	0	
	0	0	0	0	12	42	0	0	0	0	
	0	0	0	0	13	43	0	0	5	5	
	0	0	0	0	14	44	0	0	0	0	
	0	0	0	0	15	45	0	0	0	0	
	0	0	0	0	16	46	0	0	0	0	
	0	0	0	0	17	47	0	0	0	0	
	0	0	0	0	18	48	0	0	0	0	
	0	0	0	0	19	49	0	0	0	0	
	0	0	0	0	20	50	0	0	0	0	
	0	0	0	0	21	51	0	0	0	0	
	0	0	0	0	22	52	0	0	0	0	
	0	0	0	0	23	53	0	0	0	0	
	0	0	0	0	24	54	0	0	0	0	
	0	0	0	0	25	55	0	0	0	0	
	0	0	0	0	26	56	0	0	0	0	
	0	0	0	0	27	57	0	0	0	0	
	0	0	0	0	28	58	0	0	0	0	
	0	0	0	0	29	59	0	0	0	0	

Additional info (include steam dissipation point)

Observer's Signature: Laverne Patterson

20071107 Method 9 Inspection Form.doc

OCS Environmental, Inc.
Method 9 Source Layout Sketch

Date: 12 / 6 / 07

Observer Name: Clarence Patterson

Begin Time: 0730 Time End: 0930

No Sun Visible Times
0730

Observation Point

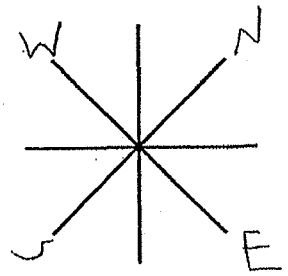

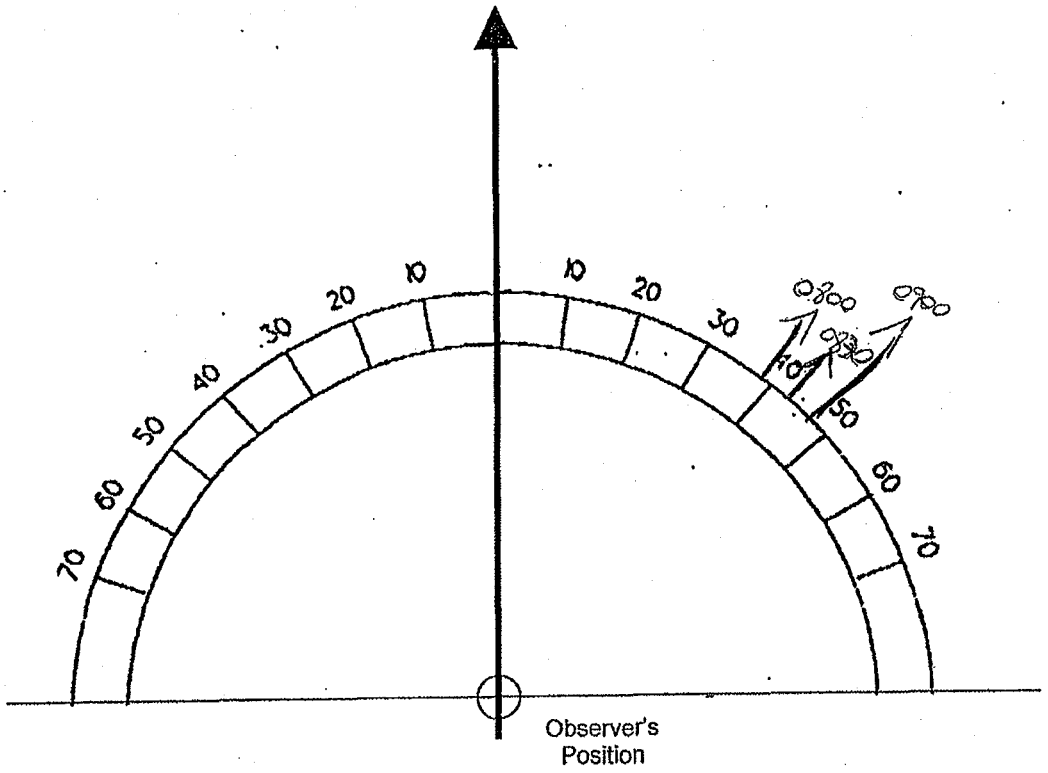

Signature: Clarence Patterson

20071107 Method 9 Source Layout Sketch.doc

6 - 1

OCS Environmental, Inc.

U.S. Steel Gary Works
Emissions Inspection Summary

Date: 11/17/07

Start Time: 1130 AM / PM

End Time: 1230 AM / PM

No. 2 Precarbon ESP

BOP	Roof Monitor		Gas Cleaners	
QBOP	Roof Monitor		Gas Cleaners	
Blast Furnace	4	6	8	14
Blast Furnace Top	4	6	8	14

The following events or operations contributed to significant emissions:

Time	Heat/Cast Number	Operation	Comments
#8 Relief Valve -		Light Emissions	
#8 Furnace Top		Light Emissions	

Jon Simpson

20071107 Inspection Summary.doc

OCS Environmental, Inc.
Method 9 VE Inspection Form

Page 1 of 1

			Start	End
Date:	11/17/07	Emissions color:	As Noted	Same
Source:	BBF Top / Relief Valve	Background:	Sky	
Observation Start Time:	1130	Sky Conditions:	Overcast	
Observation End Time:	1230	Wind Speed:	8	
Observer's Position:	BBF	Wind Direction:	North	
Distance to source:	320 yds	Ambient Temp:	45°	
Direction to source:	NW	Relative Humidity%:	79%	
		Wet Bulb Temp:	—	—
Height of source:	59'			
Vertical angle to source:	30			

Plume Type: Attached Detached None

BBF Relief Valve — BBF Top

Comments	0	15	30	45			0	15	30	45	Comments
12:00	0	0	0	0	0	30	0	0	0	0	1130
Dk. gray	0	5	0	0	1	31	0	0	0	0	
	0	0	10	5	2	32	0	0	0	0	
	0	0	0	0	3	33	0	0	0	0	
	0	0	0	0	4	34	0	0	0	0	
	0	0	0	0	5	35	0	0	0	0	
	0	0	0	0	6	36	0	0	0	0	
	0	0	0	0	7	37	10	5	0	0	Dk. gray
	0	0	0	0	8	38	0	0	0	0	
	0	0	0	0	9	39	0	0	0	0	
	0	0	0	0	10	40	0	0	0	0	
	0	0	0	0	11	41	0	0	0	0	
	0	0	0	0	12	42	0	0	0	0	
	0	5	5	0	13	43	0	0	0	0	
	0	0	0	0	14	44	0	0	0	0	
	0	0	0	0	15	45	5	10	0	0	
	0	0	0	0	16	46	0	0	0	0	
	0	0	0	0	17	47	0	0	0	0	
	0	0	0	0	18	48	0	0	0	0	
	0	0	0	0	19	49	0	0	0	0	
	0	0	0	0	20	50	0	0	0	0	
	0	0	0	0	21	51	0	0	0	0	
	0	0	0	10	22	52	0	0	0	0	
	0	0	0	0	23	53	0	0	0	0	
	0	0	0	0	24	54	0	0	0	0	
	10	10	0	0	25	55	0	0	0	0	
	0	0	0	0	26	56	0	0	0	0	
	0	0	0	0	27	57	0	0	0	0	
	0	0	0	0	28	58	0	0	0	0	
	0	0	0	0	29	59	0	0	0	0	

Additional info (include steam dissipation point)
Readings took after steam has dissipated.

Observer's Signature
Jon Simpson

20071107 Method 9 Inspection Form.doc

OCS Environmental, Inc.
Method 9 VE Inspection Form

Page _____ of _____

Date: _____
Source: _____
Observation Start Time: _____
Observation End Time: _____
Observer's Position: _____
Distance to source: _____
Direction to source: _____
_____
Height of source: _____
Vertical angle to source: _____

	Start	End
Emissions color:		
Background:		
Sky Conditions:		
Wind Speed:		
Wind Direction:		
Ambient Temp:		
Relative Humidity%:		
Wet Bulb Temp:		

Plume Type: Attached Detached None

Comments	0	15	30	45			0	15	30	45	Comments
					0	30					
					1	31					
					2	32					
					3	33					
					4	34					
					5	35					
					6	36					
					7	37					
					8	38					
					9	39					
					10	40					
					11	41					
					12	42					
					13	43					
					14	44					
					15	45					
					16	46					
					17	47					
					18	48					
					19	49					
					20	50					
					21	51					
					22	52					
					23	53					
					24	54					
					25	55					
					26	56					
					27	57					
					28	58					
					29	59					

Additional info (include steam dissipation point)

Observer's Signature

20071107 Method 9 Inspection Form.doc

OCS Environmental, Inc.
Method 9 VE Inspection Form

Page _____ of _____

Date: _____
Source: _____
Observation Start Time: _____
Observation End Time: _____
Observer's Position: _____
Distance to source: _____
Direction to source: _____
_____
Height of source: _____
Vertical angle to source: _____

	Start	End
Emissions color:		
Background:		
Sky Conditions:		
Wind Speed:		
Wind Direction:		
Ambient Temp:		
Relative Humidity%:		
Wet Bulb Temp:		

Plume Type: Attached Detached None

Comments	0	15	30	45			0	15	30	45	Comments
					0	30					
					1	31					
					2	32					
					3	33					
					4	34					
					5	35					
					6	36					
					7	37					
					8	38					
					9	39					
					10	40					
					11	41					
					12	42					
					13	43					
					14	44					
					15	45					
					16	46					
					17	47					
					18	48					
					19	49					
					20	50					
					21	51					
					22	52					
					23	53					
					24	54					
					25	55					
					26	56					
					27	57					
					28	58					
					29	59					

Additional info (include steam dissipation point)

Observer's Signature

20071107 Method 9 Inspection Form.doc

OCS Environmental, Inc.
Method 9 Source Layout Sketch

Date: 11/17/07

Observer Name: Jon Simpson

Begin Time: 1130 Time End: 1230

No Sun Visible Times
1130 -

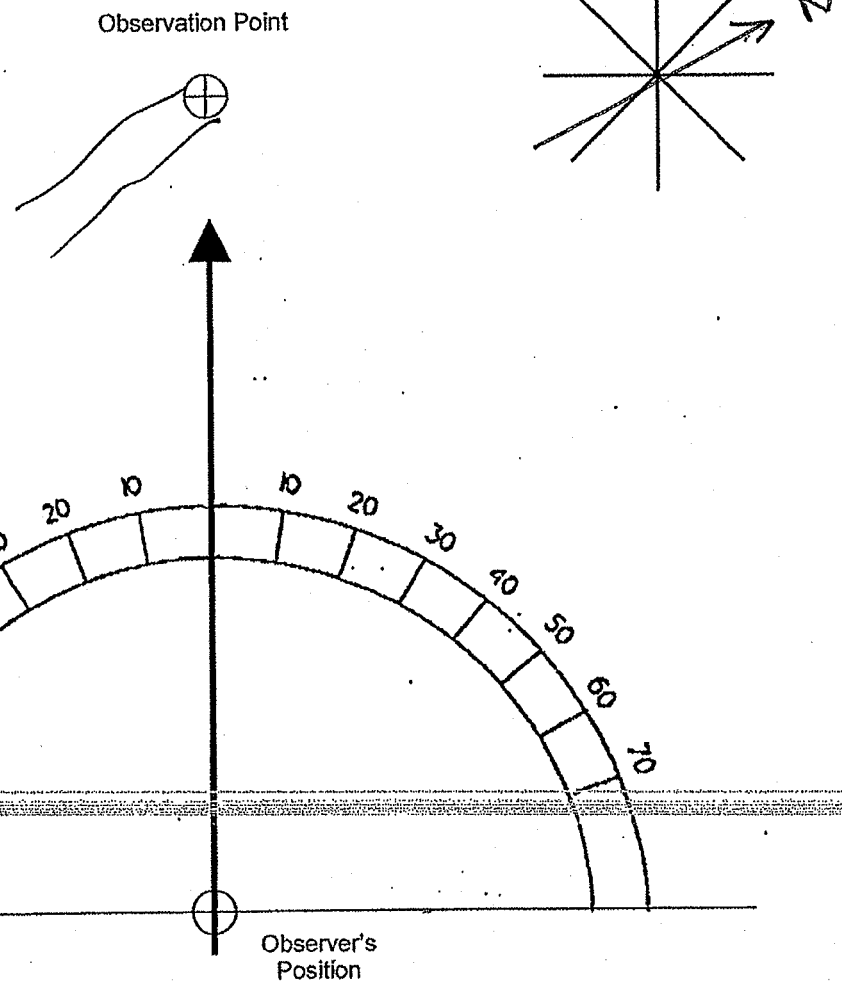

Signature: Jon Simpson

20071107 Method 9 Source Layout Sketch.doc

6-2

✓

OCS Environmental, Inc.

U.S. Steel Gary Works
Emissions Inspection Summary

Date: 11 / 15 / 07

Start Time: 11 35 AM / PM

End Time: 12 35 AM / PM

No. 2 Precarbon ESP

BOP	Roof Monitor		Gas Cleaners	
QBOP	Roof Monitor		Gas Cleaners	
Blast Furnace	4	6	8	14
Blast Furnace Top	4	6	8	14

The following events or operations contributed to significant emissions:

Time	Heat/Cast Number	Operation	Comments
#4 BF RV	NO INCIDENTS TO REPORT ✓		
#4 BF TOP	NO INCIDENTS TO REPORT		

20071107 Inspection Summary.doc

OCS Environmental, Inc.
Method 9 VE Inspection Form

Page 1 of 2

			Start	End
Date:	11/15/07	Emissions color:	As Dotted	SAME
Source:	#4BF RV+TOP	Background:	SKY	
Observation Start Time:	1135 A	Sky Conditions:	CCRY	
Observation End Time:	1200 P	Wind Speed:	10 MPH	
Observer's Position:	4BF1	Wind Direction:	NW-SW	
Distance to source:	320 YDS	Ambient Temp:	45°	
Direction to source:	NW 320 °	Relative Humidity%:	60%	
	–	Wet Bulb Temp:	–	
Height of source:	–			
Vertical angle to source:	–			

Plume Type: Attached Detached None

Comments	0	15	30	45			0	15	30	45	Comments
					0	30					
					1	31					
					2	32					
					3	33					
					4	34					BEGIN
					5	35	0	0	0	0	#4BF-RV.
					6	36	0	0	0	0	
					7	37	0	0	0	0	
					8	38	0	0	0	0	
					9	39	0	0	0	0	
					10	40	0	0	0	0	
					11	41	0	0	0	0	
					12	42	0	0	0	0	
					13	43	0	0	0	0	
					14	44	0	0	0	0	
					15	45	0	0	0	0	
					16	46	0	0	0	0	
					17	47	0	0	0	0	
					18	48	0	0	0	0	
					19	49	0	0	0	0	
					20	50	0	0	0	0	
					21	51	0	0	0	0	
					22	52	0	0	0	0	
					23	53	0	0	0	0	
					24	54	0	0	0	0	
					25	55	0	0	0	0	
					26	56	0	0	0	0	
					27	57	0	0	0	0	
					28	58	0	0	0	0	
					29	59	0	0	0	0	

Additional info (include steam dissipation point)

Observer's Signature

20071107 Method 9 Inspection Form.doc

OCS Environmental, Inc.
Method 9 VE Inspection Form

Page 2 of 2

			Start	End
Date:	11/15/07	Emissions color:	As Noted	Same
Source:	#4BF RV+TOP	Background:	Sky	
Observation Start Time:	12 cop	Sky Conditions:	Cdy	
Observation End Time:	12 34 59 P	Wind Speed:	10	
Observer's Position:	4BF1	Wind Direction:	WSW	
Distance to source:	320 YDS	Ambient Temp:	45	
Direction to source:	NW 320	Relative Humidity%:	60%	
	—	Wet Bulb Temp:		
Height of source:	—			
Vertical angle to source:	—			

Plume Type: Attached Detached None

Comments	0	15	30	45			0	15	30	45	Comments
	0	0	0	0	0	30	0	0	0	0	
	0	0	0	0	1	31	0	0	0	0	
	0	0	0	0	2	32	0	0	0	0	
	0	0	0	0	3	33	0	0	0	0	
END #4BF RV	0	0	0	0	4	34	0	0	0	0	END #4BF TOP
BEGIN #4BF TOP	0	0	0	0	5	35	/	/	/	/	
	0	0	0	0	6	36					
	0	0	0	0	7	37					
	0	0	0	0	8	38					
	0	0	0	0	9	39					
	0	0	0	0	10	40					
	0	0	0	0	11	41					
	0	0	0	0	12	42					
	0	0	0	0	13	43					
	0	0	0	0	14	44					
	0	0	0	0	15	45					
	0	0	0	0	16	46					
	0	0	0	0	17	47					
	0	0	0	0	18	48					
	0	0	0	0	19	49					
	0	0	0	0	20	50					
	0	0	0	0	21	51					
	0	0	0	0	22	52					
	0	0	0	0	23	53					
	0	0	0	0	24	54					
	0	0	0	0	25	55					
	0	0	0	0	26	56					
	0	0	0	0	27	57					
	0	0	0	0	28	58					
	0	0	0	0	29	59					

Additional info (include steam dissipation point)

Observer's Signature

20071107 Method 9 Inspection Form.doc

OCS Environmental, Inc.
Method 9 VE Inspection Form

Page 3 of 3

			Start	End
Date:	11/15/07	Emissions color:	As Noted	Same
Source:	# 4 BF RV Hop	Background:	Sky	
Observation Start Time:	X	Sky Conditions:	Cloy	
Observation End Time:		Wind Speed:	10	
Observer's Position:	4 BA	Wind Direction:	WNW	
Distance to source:	320 YDS	Ambient Temp:	45°	
Direction to source:	NW 320°	Relative Humidity%:	60%	
		Wet Bulb Temp:	–	
Height of source:	–			
Vertical angle to source:	–			

Plume Type: Attached Detached None

Comments	0	15	30	45			0	15	30	45	Comments
					0	30					
					1	31					
					2	32					
					3	33					
					4	34					
					5	35					
					6	36					
					7	37					
					8	38					
					9	39					
					10	40					
					11	41					
					12	42					
					13	43					
					14	44					
					15	45					
					16	46					
					17	47					
					18	48					
					19	49					
					20	50					
					21	51					
					22	52					
					23	53					
					24	54					
					25	55					
					26	56					
					27	57					
					28	58					
					29	59					

Additional info (include steam dissipation point)

Observer's Signature

20071107 Method 9 Inspection Form.doc

OCS Environmental, Inc.
Method 9 Source Layout Sketch

Date: 11, 15, 07

Observer Name: T. SMITH

Begin Time: 11:35 A

Time End: 12:34:59 P

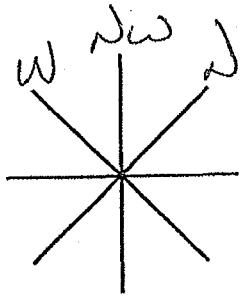

No Sun Visible Times
11:35 A
12:00 P

Observation Point

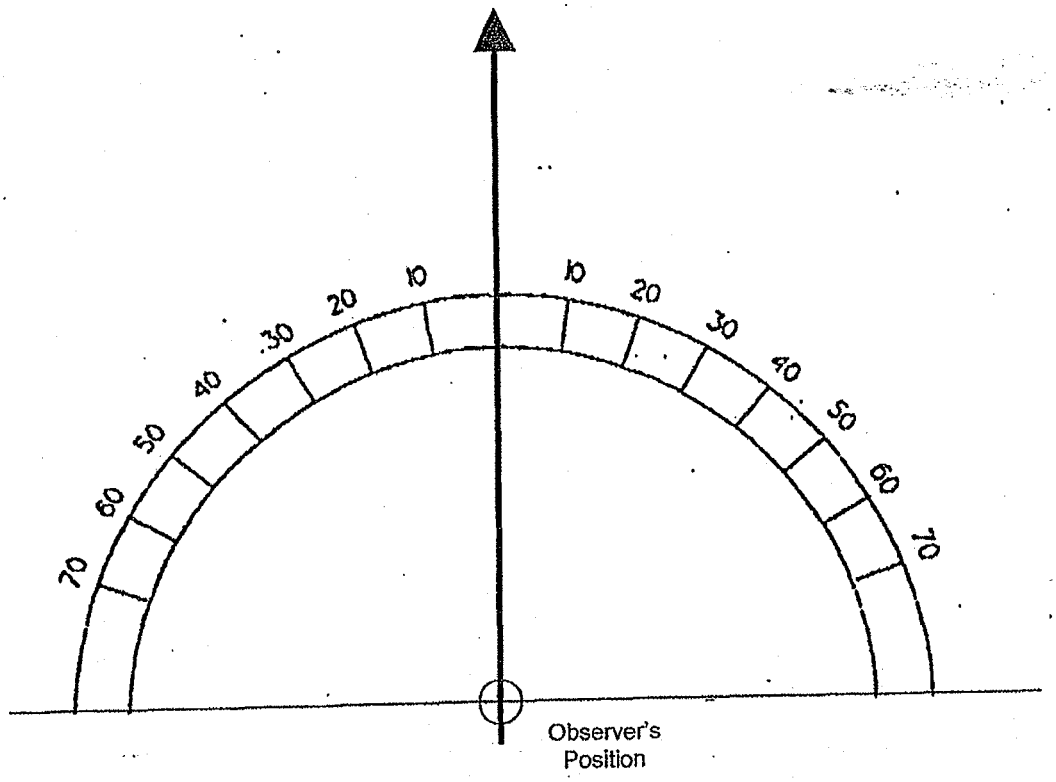

Signature:

20071107 Method 9 Source Layout Sketch.doc

63

OCS Environmental, Inc.

U.S. Steel Gary Works
Emissions Inspection Summary

Date: 11 / 24 / 07

Start Time: 0955 AM / PM

End Time: 1055 AM / PM

No. 2 Precarbon ESP

BOP	Roof Monitor		Gas Cleaners	
QBOP	Roof Monitor		Gas Cleaners	
Blast Furnace	4	6	8	14
Blast Furnace Top	4	6	8	14

The following events or operations contributed to significant emissions:

Time	Heat/Cast Number	Operation	Comments
#4 BF RJ	- No Incidents To Report		
#4 BF TOP	- No Incidents To Report		

20071107 Inspection Summary.doc

OCS Environmental, Inc.
Method 9 VE Inspection Form

Page 1 of 2

			Start	End
Date:	4/24/07	Emissions color:	As Seen	Same
Source:	# 4 BF CV+TOP	Background:	Sky	
Observation Start Time:	0955A	Sky Conditions:	Clear	
Observation End Time:	10^00 A	Wind Speed:	10	
Observer's Position:	4 BF 1	Wind Direction:	SSW	
Distance to source:	320 YARDS	Ambient Temp:	40°	
Direction to source:	NW 320 °	Relative Humidity%:	70%	
	/	Wet Bulb Temp:	/	
Height of source:	/			
Vertical angle to source:	/			

Plume Type: Attached Detached None

Comments	0	15	30	45			0	15	30	45	Comments
					0	30					
					1	31					
					2	32					
					3	33					
					4	34					
					5	35					
					6	36					
					7	37					
					8	38					
					9	39					
					10	40					
					11	41					
					12	42					
					13	43					
					14	44					
					15	45					
					16	46					
					17	47					
					18	48					
					19	49					
					20	50					
					21	51					
					22	52					
					23	53					#4 BF RV
					24	54					
					25	55	0	0	0	0	Back Observer
					26	56	0	0	0	0	
					27	57	0	0	0	0	
					28	58	0	0	0	0	
					29	59	0	0	0	0	

Additional info (include steam dissipation point)

Observer's Signature

20071107 Method 9 Inspection Form.doc

OCS Environmental, Inc.
Method 9 VE Inspection Form

Page 2 of 2

			Start	End
Date:	11/24/07	Emissions color:	As Soil	Same
Source:	#4 BF RV + Top	Background:	Sky	
Observation Start Time:	10:00 A	Sky Conditions:	Cloudy	
Observation End Time:	10:30 A	Wind Speed:	10	
Observer's Position:	#4 BF 1	Wind Direction:	SSW	
Distance to source:	320 YD	Ambient Temp:	46	
Direction to source:	NW 320°	Relative Humidity%:	70%	
	/	Wet Bulb Temp:	/	
Height of source:	/			
Vertical angle to source:	/			

Plume Type: Attached Detached None

Comments	0	15	30	45			0	15	30	45	Comments
#4 BF RV	0	0	0	0	0	30	0	0	0	0	
Cont	0	0	0	0	1	31	0	0	0	0	
	0	0	0	0	2	32	0	0	0	0	
	0	0	0	0	3	33	0	0	0	0	
	0	0	0	0	4	34	0	0	0	0	x
	0	0	0	0	5	35	0	0	0	0	
	0	0	0	0	6	36	0	0	0	0	
	0	0	0	0	7	37	0	0	0	0	
	0	0	0	0	8	38	0	0	0	0	
	0	0	0	0	9	39	0	0	0	0	
	0	0	0	0	10	40	0	0	0	0	
	0	0	0	0	11	41	0	0	0	0	
	0	0	0	0	12	42	0	0	0	0	
	0	0	0	0	13	43	0	0	0	0	
	0	0	0	0	14	44	0	0	0	0	
	0	0	0	0	15	45	0	0	0	0	
	0	0	0	0	16	46	0	0	0	0	
	0	0	0	0	17	47	0	0	0	0	
	0	0	0	0	18	48	0	0	0	0	
	0	0	0	0	19	49	0	0	0	0	
	0	0	0	0	20	50	0	0	0	0	
	0	0	0	0	21	51	0	0	0	0	
	0	0	0	0	22	52	0	0	0	0	
	0	0	0	0	23	53	0	0	0	0	
End #4 BF RV	0	0	0	0	24	54	0	0	0	0	
Begin #4 BF Top	0	0	0	0	25	55	X	X	X	X	End Observation #4 BF Top 09:55 A 11-24-07
	0	0	0	0	26	56					
	0	0	0	0	27	57					
	0	0	0	0	28	58					
	0	0	0	0	29	59					

Additional info (include steam dissipation point)

Observer's Signature

20071107 Method 9 Inspection Form.doc

OCS Environmental, Inc.
Method 9 VE Inspection Form

Page _____ of _____

Date: _____
Source: _____
Observation Start Time: _____
Observation End Time: _____
Observer's Position: _____
Distance to source: _____
Direction to source: _____
_____
Height of source: _____
Vertical angle to source: _____

	Start	End
Emissions color:		
Background:		
Sky Conditions:		
Wind Speed:		
Wind Direction:		
Ambient Temp:		
Relative Humidity%:		
Wet Bulb Temp:		

Plume Type: Attached Detached None

Comments	0	15	30	45			0	15	30	45	Comments
					0	30					
					1	31					
					2	32					
					3	33					
					4	34					
					5	35					
					6	36					
					7	37					
					8	38					
					9	39					
					10	40					
					11	41					
					12	42					
					13	43					
					14	44					
					15	45					
					16	46					
					17	47					
					18	48					
					19	49					
					20	50					
					21	51					
					22	52					
					23	53					
					24	54					
					25	55					
					26	56					
					27	57					
					28	58					
					29	59					

Additional info (include steam dissipation point)

Observer's Signature

20071107 Method 9 Inspection Form.doc

OCS Environmental, Inc.
Method 9 Source Layout Sketch

Date: 11/24/07

Observer Name: T. Smith

Begin Time: 0455A

Time End: 1055A

No Sun Visible Times
0455A
1025 A
Mc Clay

Observation Point

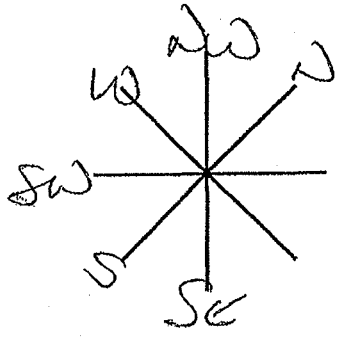

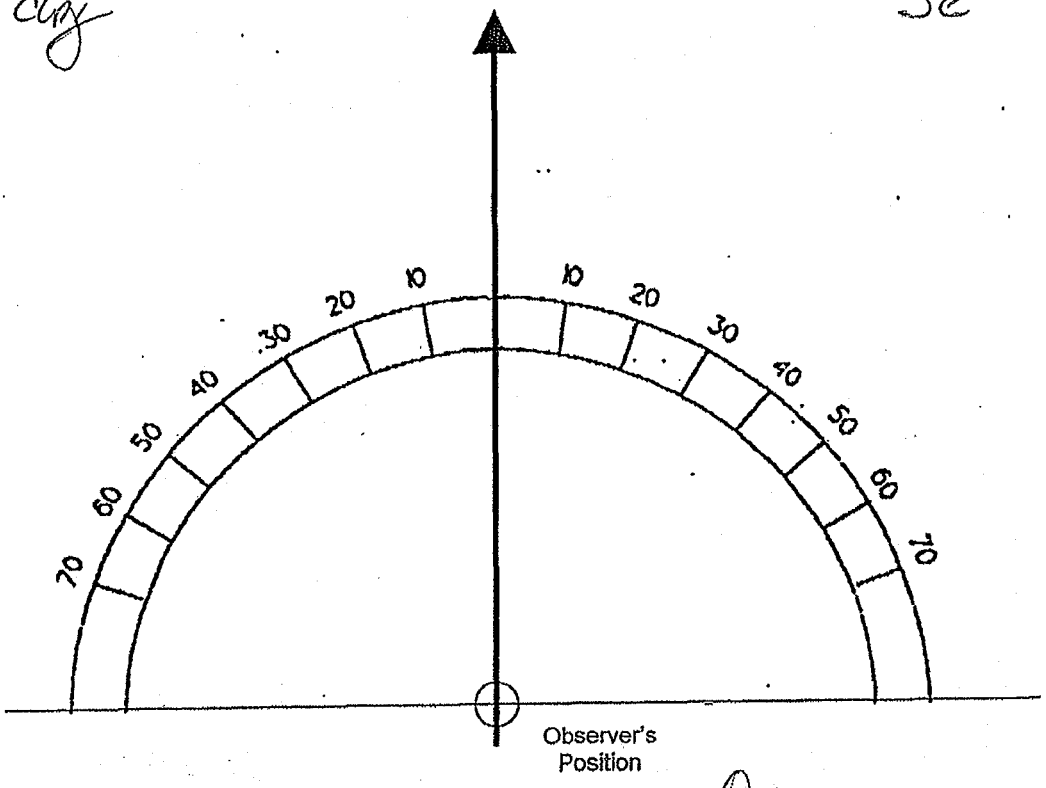

Signature:

20071107 Method 9 Source Layout Sketch.doc

OCS Environmental, Inc.

U.S. Steel Gary Works
Emissions Inspection Summary

Date: 11 / 29 / 07

Start Time: 1120 AM / PM

End Time: 1220 AM / PM

No. 2 Precarbon ESP

BOP	Roof Monitor		Gas Cleaners	
QBOP	Roof Monitor		Gas Cleaners	
Blast Furnace	4	6	8	14
Blast Furnace Top	4	6	8	14

The following events or operations contributed to significant emissions:

Time	Heat/Cast Number	Operation	Comments
#4Bf -	RV -	No	Incidents To Report
#4Bf -	Top -	No	Incidents To Report

20071107 Inspection Summary.doc

OCS Environmental, Inc.
Method 9 VE Inspection Form

Page 1 of 2

			Start	End
Date:	11/26/01	Emissions color:	As Used	Same
Source:	#4BF RV + TOP	Background:	Sky	
Observation Start Time:	11 20 A	Sky Conditions:	Cloudy	
Observation End Time:	12 00 P	Wind Speed:	15	
Observer's Position:	4BF1	Wind Direction:	NW	
Distance to source:	320 YARDS	Ambient Temp:	35	
Direction to source:	NW 320°	Relative Humidity%:	50%	
	/	Wet Bulb Temp:	/	
Height of source:	/			
Vertical angle to source:	/			

Plume Type: Attached Detached None

Comments	0	15	30	45			0	15	30	45	Comments
#4BF RV +					0	30	0	0	0	0	
TOP					1	31	0	0	0	0	
					2	32	0	0	0	0	
					3	33	0	0	0	0	
					4	34	0	0	0	0	
					5	35	0	0	0	0	
					6	36	0	0	0	0	
					7	37	0	0	0	0	
					8	38	0	0	0	0	
					9	39	0	0	0	0	
					10	40	0	0	0	0	
					11	41	0	0	0	0	
					12	42	0	0	0	0	
					13	43	0	0	0	0	
					14	44	0	0	0	0	
					15	45	0	0	0	0	
					16	46	0	0	0	0	
					17	47	0	0	0	0	
					18	48	0	0	0	0	
					19	49	0	0	0	0	END OBS #4BF RV
BEGIN OBS. #4BF RV	0	0	0	0	20	50	0	0	0	0	BEGIN OBS #4BF TOP
	0	0	0	0	21	51	0	0	0	0	
	0	0	0	0	22	52	0	0	0	0	
	0	0	0	0	23	53	0	0	0	0	
	0	0	0	0	24	54	0	0	0	0	
	0	0	0	0	25	55	0	0	0	0	
	0	0	0	0	26	56	0	0	0	0	
	0	0	0	0	27	57	0	0	0	0	
	0	0	0	0	28	58	0	0	0	0	
	0	0	0	0	29	59	0	0	0	0	

Additional info (include steam dissipation point)

Observer's Signature

20071107 Method 9 Inspection Form.doc

OCS Environmental, Inc.
Method 9 VE Inspection Form

Page 2 of 2

			Start	End
Date:	11/24/07	Emissions color:	As Noted	Same
Source:	#4 BF RV + TOP	Background:	Sky	
Observation Start Time:	1200 P	Sky Conditions:	CLDY	
Observation End Time:	1220 P	Wind Speed:	15	
Observer's Position:	4 BF 1	Wind Direction:	NW	
Distance to source:	320 YARDS	Ambient Temp:	35°	
Direction to source:	NW 320°	Relative Humidity%:	10%	
	/	Wet Bulb Temp:	/	
Height of source:	/			
Vertical angle to source:	/			

Plume Type: Attached Detached None

Comments	0	15	30	45			0	15	30	45	Comments
#4 BF TOP Cont.	0	0	0	0	0	30					
	0	0	0	0	1	31					
	0	0	0	0	2	32					
	0	0	0	0	3	33					
	0	0	0	0	4	34					
	0	0	0	0	5	35					
	0	0	0	0	6	36					
	0	0	0	0	7	37					
	0	0	0	0	8	38					
	0	0	0	0	9	39					
	0	0	0	0	10	40					
	0	0	0	0	11	41					
	0	0	0	0	12	42					
	0	0	0	0	13	43					
	0	0	0	0	14	44					
	0	0	0	0	15	45					
	0	0	0	0	16	46					
	0	0	0	0	17	47					
	0	0	0	0	18	48					
	0	0	0	0	19	49					
End OBS 1220 P	x	x	x	x	20	50					
11-24-07					21	51					
					22	52					
					23	53					
					24	54					
					25	55					
					26	56					
					27	57					
					28	58					
					29	59					

Additional info (include steam dissipation point)

Observer's Signature

20071107 Method 9 Inspection Form.doc

OCS Environmental, Inc.
Method 9 VE Inspection Form

Page _____ of _____

Date: _____
Source: _____
Observation Start Time: _____
Observation End Time: _____
Observer's Position: _____
Distance to source: _____
Direction to source: _____
_____
Height of source: _____
Vertical angle to source: _____

	Start	End
Emissions color:		
Background:		
Sky Conditions:		
Wind Speed:		
Wind Direction:		
Ambient Temp:		
Relative Humidity%:		
Wet Bulb Temp:		

Plume Type: Attached Detached None

Comments	0	15	30	45			0	15	30	45	Comments
					0	30					
					1	31					
					2	32					
					3	33					
					4	34					
					5	35					
					6	36					
					7	37					
					8	38					
					9	39					
					10	40					
					11	41					
					12	42					
					13	43					
					14	44					
					15	45					
					16	46					
					17	47					
					18	48					
					19	49					
					20	50					
					21	51					
					22	52					
					23	53					
					24	54					
					25	55					
					26	56					
					27	57					
					28	58					
					29	59					

Additional info (include steam dissipation point)

Observer's Signature

20071107 Method 9 Inspection Form.doc

OCS Environmental, Inc.
Method 9 Source Layout Sketch

Date: 11 / 24 / 07

Observer Name: T SMITH

Begin Time: 11:20 A

Time End: 12:20 P.

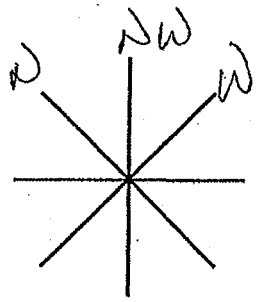

No Sun Visible Times

Observation Point

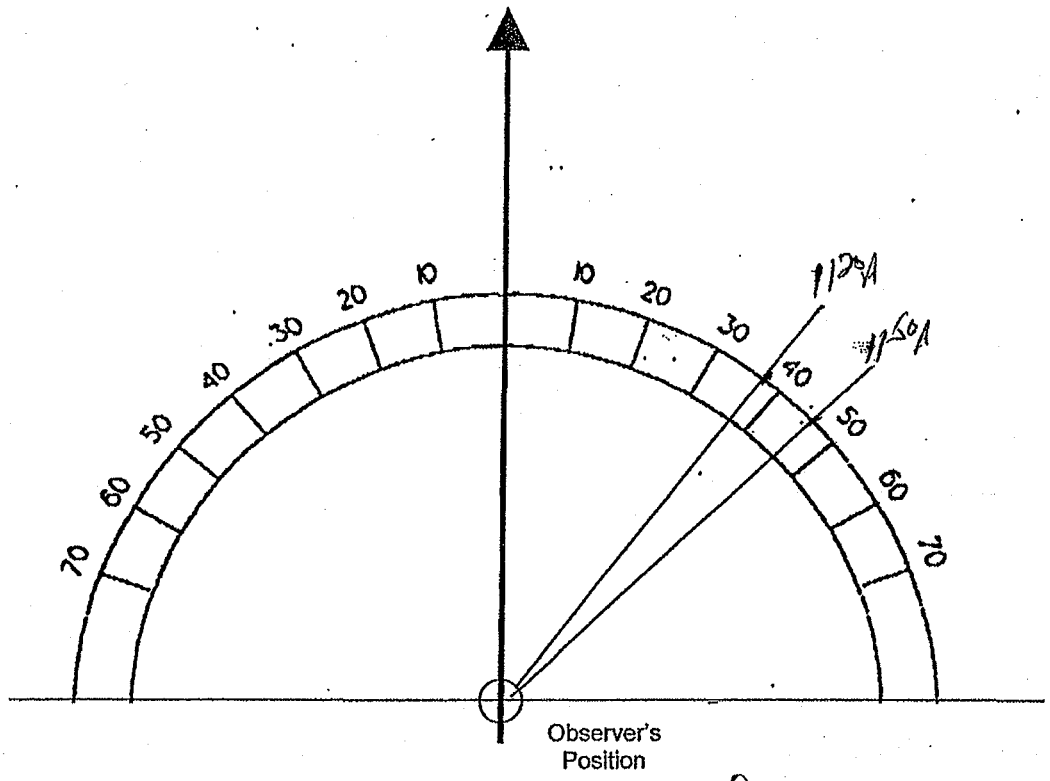

Signature:

20071107 Method 9 Source Layout Sketch.doc

6-5

OCS Environmental, Inc.

U.S. Steel Gary Works
Emissions Inspection Summary

Date: 12 / 7 / 07

Start Time: 0930 AM / PM

End Time: 1030 AM / PM

No. 2 Precarbon ESP

BOP	Roof Monitor		Gas Cleaners	
QBOP	Roof Monitor		Gas Cleaners	
Blast Furnace	4	6	8	14
Blast Furnace Top	4	6	8	14

The following events or operations contributed to significant emissions:

Time	Heat/Cast Number	Operation	Comments
#4 BF - RV - NO		Incidents to Report.	
#4 BF - TOP - NO		Incidents to Report.	

20071107 Inspection Summary.doc

OCS Environmental, Inc.
Method 9 VE Inspection Form

Page 1 of 2

			Start	End
Date:	12/7/07	Emissions color:	AS Noted	Same
Source:	#4 BF RV+TOP	Background:	Sky	
Observation Start Time:	0930 A	Sky Conditions:	OC+ CLDY	
Observation End Time:	1000	Wind Speed:	5	
Observer's Position:	4BF 1	Wind Direction:	SW	
Distance to source:	320 Yards	Ambient Temp:	26°	
Direction to source:	NW320°	Relative Humidity%:	88%	
	/	Wet Bulb Temp:	/	
Height of source:	/			
Vertical angle to source:	/			

Plume Type: Attached Detached None

	Comments	0	15	30	45			0	15	30	45	Comments
#4	BF RV+TOP					0	30	0	0	0	0	#4 BF RV
						1	31	0	0	0	0	
						2	32	0	0	0	0	
						3	33	0	0	0	0	
						4	34	0	0	0	0	
						5	35	0	0	0	0	
						6	36	0	0	0	0	
						7	37	0	0	0	0	
						8	38	0	0	0	0	
						9	39	0	0	0	0	
						10	40	0	0	0	0	
						11	41	0	0	0	0	
						12	42	0	0	0	0	
						13	43	0	0	0	0	
						14	44	0	0	0	0	
						15	45	0	0	0	0	
						16	46	0	0	0	0	
						17	47	0	0	0	0	
						18	48	0	0	0	0	
						19	49	0	0	0	0	
						20	50	0	0	0	0	
						21	51	0	0	0	0	
						22	52	0	0	0	0	
						23	53	0	0	0	0	
						24	54	0	0	0	0	
						25	55	0	0	0	0	
						26	56	0	0	0	0	
						27	57	0	0	0	0	
						28	58	0	0	0	0	
						29	59	0	0	0	0	

Additional info (include steam dissipation point)
Annulled Steam Plume - Remains After Steam Dissipates

Observer's Signature

20071107 Method 9 Inspection Form.doc

OCS Environmental, Inc.
Method 9 VE Inspection Form

			Start	End
Date:	12/2/07	Emissions color:	As Dorsal	Same
Source:	# 4 Bf RV + Top	Background:	Sky	
Observation Start Time:	1000 A	Sky Conditions:	OC + CLRY	
Observation End Time:	1030 A	Wind Speed:	5	
Observer's Position:	4 Bf 1	Wind Direction:	SW	
Distance to source:	320 Yards	Ambient Temp:	26°	
Direction to source:	NW 320°	Relative Humidity%:	88%	
	/	Wet Bulb Temp:	/	
Height of source:	/			
Vertical angle to source:	/			

Plume Type: Attached Detached None

Comments	0	15	30	45			0	15	30	45	Comments
# 4 Bf Top	0	0	0	0	0	30					
	0	0	0	0	1	31					
	0	0	0	0	2	32					
	0	0	0	0	3	33					
	0	0	0	0	4	34					
	0	0	0	0	5	35					
	0	0	0	0	6	36					
	0	0	0	0	7	37					
	0	0	0	0	8	38					
	0	0	0	0	9	39					
	0	0	0	0	10	40					
	0	0	0	0	11	41					
	0	0	0	0	12	42					
	0	0	0	0	13	43					
	0	0	0	0	14	44					
	0	0	0	0	15	45					
	0	0	0	0	16	46					
	0	0	0	0	17	47					
	0	0	0	0	18	48					
	0	0	0	0	19	49					
	0	0	0	0	20	50					
	0	0	0	0	21	51					
	0	0	0	0	22	52					
	0	0	0	0	23	53					
	0	0	0	0	24	54					
	0	0	0	0	25	55					
	0	0	0	0	26	56					
	0	0	0	0	27	57					
	0	0	0	0	28	58					
	0	0	0	0	29	59					

Additional info (include steam dissipation point)
See Data Page (1)

Observer's Signature

20071107 Method 9 Inspection Form.doc

OCS Environmental, Inc.
Method 9 Source Layout Sketch

Date: 12, 1, 07

Observer Name: T. Smith

Begin Time: 0930 A

Time End: 10:30 A

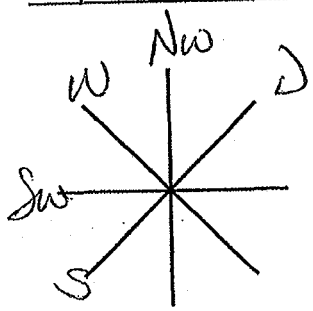

No Sun Visible Times

0930A N/C CLDY+OC

10:00 A ✓ ✓ ✓

Observation Point

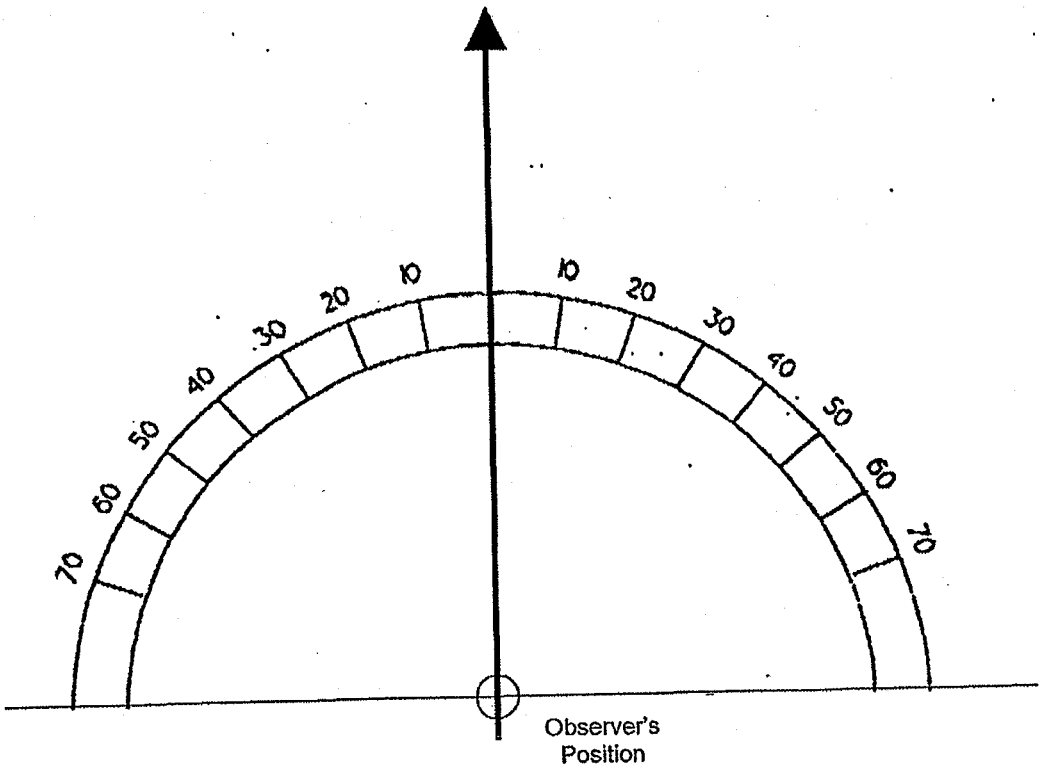

Signature:

20071107 Method 9 Source Layout Sketch.doc

6-6

OCS Environmental, Inc.

U.S. Steel Gary Works
Emissions Inspection Summary

Date: 11/12/07

Start Time: 0930 (AM) / PM

End Time: 1030 (AM) / PM

No. 2 Precarbon ESP

BOP	Roof Monitor		Gas Cleaners	
QBOP	Roof Monitor		Gas Cleaners	
Blast Furnace	4	6	8	14
Blast Furnace Top	4	6	8	14

The following events or operations contributed to significant emissions:

Time	Heat/Cast Number	Operation	Comments
FCE, Top:	Lite Emissions Observed		
Rel. Valve:	Lite Emissions Observed		

20071107 Inspection Summary.doc

OCS Environmental, Inc.
Method 9 VE Inspection Form

Page 1 of 2

			Start	End
Date:	11-12-07			
Source:	#8BF Fce. Top	Emissions color:	As Noted	Same
Observation Start Time:	0930	Background:	Sky	
Observation End Time:	0959	Sky Conditions:	Overcast	
Observer's Position:	East of Slip	Wind Speed:	3	
Distance to source:	300 yds	Wind Direction:	West	
Direction to source:	West	Ambient Temp:	60	
		Relative Humidity%:	91	
Height of source:	–	Wet Bulb Temp:	–	
Vertical angle to source:	–			

Plume Type: (Attached) Detached None

Comments	0	15	30	45			0	15	30	45	Comments
					0	30	0	0	0	0	Fce. Top
					1	31	0	0	0	0	
					2	32	0	0	0	0	
					3	33	0	10	10	0	Black
					4	34	0	0	0	0	
					5	35	0	0	0	0	
					6	36	0	0	0	0	
					7	37	0	10	20	10	Black
					8	38	0	0	0	0	
					9	39	0	0	0	0	
					10	40	0	0	0	0	
					11	41	10	10	0	0	Black
					12	42	0	0	0	0	
					13	43	0	0	0	0	
					14	44	0	0	10	10	Black
					15	45	0	0	0	0	
					16	46	0	0	0	0	
					17	47	0	0	0	0	
					18	48	0	0	0	0	
					19	49	0	0	0	0	
					20	50	0	15	10	10	Black
					21	51	0	0	0	0	
					22	52	0	0	0	0	
					23	53	0	0	0	0	
					24	54	0	0	10	10	Black
					25	55	0	0	0	0	
					26	56	0	0	0	0	
					27	57	0	0	0	0	
					28	58	15	10	15	10	Black
					29	59	0	0	0	0	

Additional info (include steam dissipation point)

Observer's Signature: Kevin Davis

20071107 Method 9 Inspection Form.doc

OCS Environmental, Inc.
Method 9 VE Inspection Form

Page 2 of 2

			Start	End
Date:	11-12-07			
Source:	#8BF Rel. Valve	Emissions color:	As Noted	Same
Observation Start Time:	1000	Background:	Sky	↓
Observation End Time:	1029	Sky Conditions:	Overcast	↓
Observer's Position:	East of Slip	Wind Speed:	3	↓
Distance to source:	300yds	Wind Direction:	West	↓
Direction to source:	West	Ambient Temp:	60	↓
		Relative Humidity%:	91	↓
Height of source:	–	Wet Bulb Temp:	–	↓
Vertical angle to source:	–			

Plume Type: Attached Detached None

Comments	0	15	30	45			0	15	30	45	Comments
Rel. Valve	0	0	0	0	0	30					
	0	0	0	0	1	31					
	0	0	0	0	2	32					
	0	0	0	0	3	33					
	0	0	0	0	4	34					
	0	0	0	0	5	35					
	0	0	0	0	6	36					
	0	0	0	0	7	37					
	0	0	0	0	8	38					
	0	0	0	0	9	39					
	0	0	0	0	10	40					
Black	0	0	15	10	11	41					
"	10	0	0	0	12	42					
	0	0	0	0	13	43					
	0	0	0	0	14	44					
"	0	0	0	15	15	45					
"	15	10	0	0	16	46					
	0	0	0	0	17	47					
	0	0	0	0	18	48					
	0	0	0	0	19	49					
	0	0	0	0	20	50					
	0	0	0	0	21	51					
	0	0	0	0	22	52					
	0	0	0	0	23	53					
	0	0	0	0	24	54					
	0	0	0	0	25	55					
	0	0	0	0	26	56					
	0	0	0	0	27	57					
	0	0	0	0	28	58					
	0	0	0	0	29	59					

Additional info (include steam dissipation point)

Observer's Signature: Kevin Davis

20071107 Method 9 Inspection Form.doc

OCS Environmental, Inc.
Method 9 Source Layout Sketch

Date: 11 / 12 / 07

Observer Name: K. Davis

Begin Time: 0930

Time End: 1030

No Sun Visible Times
0930
1000

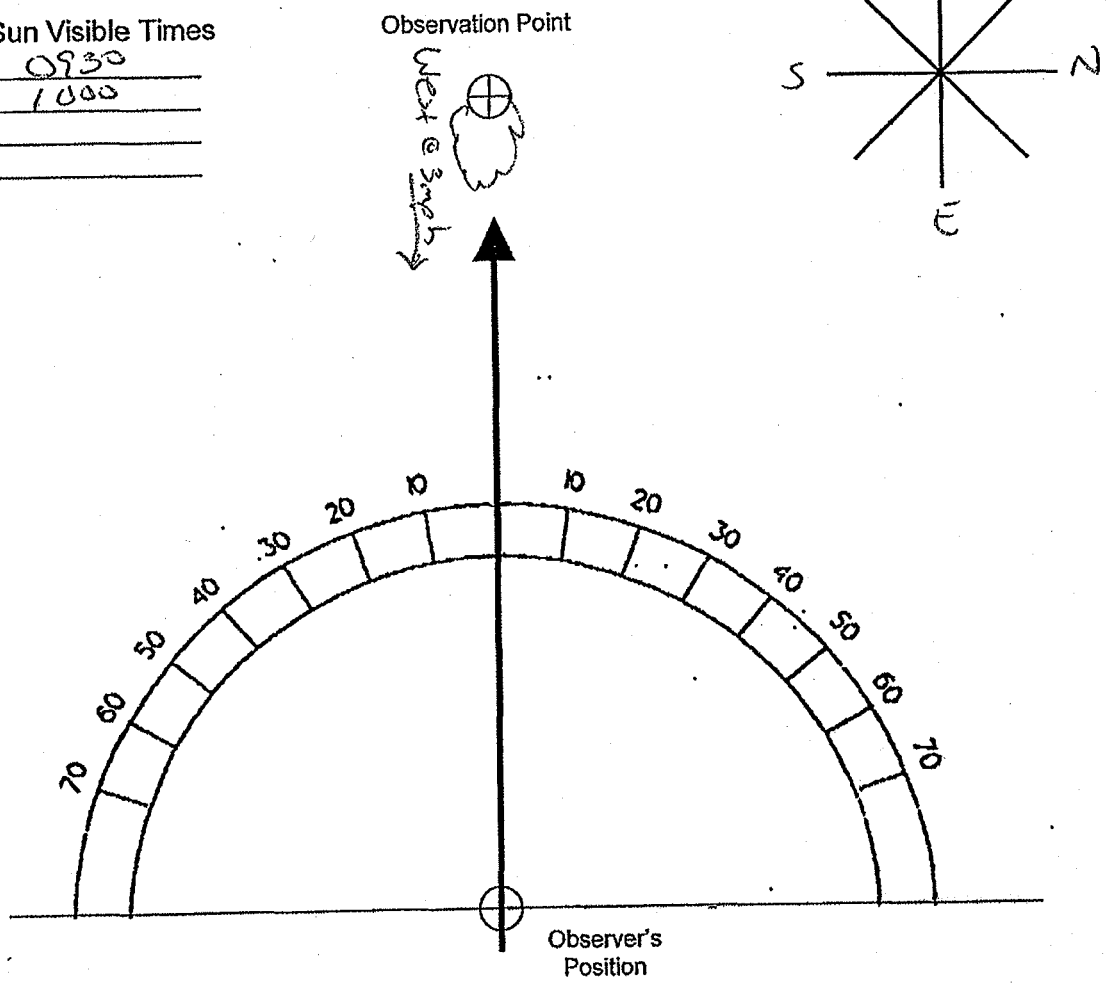

Signature: Kevin Davis

20071107 Method 9 Source Layout Sketch.doc

6 - 7

OCS Environmental, Inc.

U.S. Steel Gary Works
Emissions Inspection Summary

Date: 11/28/07

Start Time: 12:30 AM / PM

End Time: 13:29 AM / PM

No. 2 Precarbon ESP

BOP	Roof Monitor		Gas Cleaners	
QBOP	Roof Monitor		Gas Cleaners	
Blast Furnace	4	6	8	14
Blast Furnace Top	4	6	8	14

The following events or operations contributed to significant emissions:

Time	Heat/Cast Number	Operation	Comments

20071107 Inspection Summary.doc

OCS Environmental, Inc.
Method 9 VE Inspection Form

Date:	11-28-07
Source:	#8 BFL
Observation Start Time:	12:30
Observation End Time:	12:59
Observer's Position:	8 BF2
Distance to source:	350 YDS
Direction to source:	W 310°
Height of source:	59'
Vertical angle to source:	6°

	Start	End
Emissions color:	AS NOTED	SAME
Background:	SKY	✓
Sky Conditions:	CLOUDY	✓
Wind Speed:	15-20	✓
Wind Direction:	SO.	✓
Ambient Temp:	42°	✓
Relative Humidity%:	85%	✓
Wet Bulb Temp:	NA	✓

Plume Type: (Attached) Detached None

	0	15	30	45	Comments
0	0	0	0	0	
1	0	0	0	0	
2	0	0	0	0	
3	0	0	0	0	
4	0	0	0	0	
5	0	0	0	0	
6	0	0	0	0	
7	0	0	0	0	
8	0	0	0	0	
9	0	0	0	0	
10	0	0	0	0	
11	0	0	0	0	
12	0	0	0	0	
13	0	0	0	5	BROWN
14	0	0	0	15	
15	10	5	0	0	
16	0	0	0	0	
17	0	0	0	0	
18	0	0	0	0	
19	0	0	25	0	BLACK
20	0	0	0	15	
21	0	0	0	0	
22	0	0	0	0	
23	0	0	0	0	
24	0	0	0	20	BLACK
25	0	0	0	0	
26	0	0	0	0	
27	0	0	0	0	
28	0	0	0	0	
29	10	0	0	0	
30	0	0	0	0	
31	0	0	0	0	
32	0	0	0	0	
33	0	0	0	0	
34	0	0	0	0	
35	0	0	0	0	
36	0	0	0	0	
37	0	0	0	0	
38	0	0	0	0	
39	0	0	0	0	
40	0	0	0	0	
41	0	0	0	0	
42	0	0	0	0	
43	0	0	0	5	BROWN
44	0	0	0	15	
45	10	5	0	0	
46	0	0	0	0	
47	0	0	0	0	
48	0	0	0	0	
49	0	0	25	0	BLACK
50	0	0	0	15	
51	0	0	0	0	
52	0	0	0	0	
53	0	0	0	0	
54	0	0	0	20	BLACK
55	0	0	0	0	
56	0	0	0	0	
57	0	0	0	0	
58	0	0	0	0	
59	10	0	0	0	

Additional info (include steam dissipation point)

Observer's Signature: Chet Dudzin

20071107 Method 9 Inspection Form.doc

OCS Environmental, Inc.
Method 9 VE Inspection Form

			Start	End
Date:	11-28-07			
Source:	#8 BFC	Emissions color:	AS NOTED	
Observation Start Time:	13:00	Background:	SKY	
Observation End Time:	13:29	Sky Conditions:	CLOUDY	
Observer's Position:	8BF2	Wind Speed:	15-20	
Distance to source:	350 YDS	Wind Direction:	S0.	
Direction to source:	W 310°	Ambient Temp:	42°	
		Relative Humidity%:	85%	
Height of source:	59'	Wet Bulb Temp:	N/A	
Vertical angle to source:	6°			

Plume Type: (Attached) Detached None

Comments	0	15	30	45			0	15	30	45	Comments
	0	0	0	0	0	30					
	0	0	0	0	1	31					
	0	0	0	0	2	32					
	0	0	0	0	3	33					
	0	0	0	0	4	34					
	0	0	0	0	5	35					
	0	0	0	0	6	36					
	0	0	0	0	7	37					
BLACK	0	0	0	10	8	38					
	5	0	0	0	9	39					
	0	0	0	0	10	40					
	0	0	0	0	11	41					
	0	0	0	0	12	42					
BLACK	0	15	0	0	13	43					
	0	0	0	0	14	44					
	0	0	0	0	15	45					
BLACK	0	0	0	25	16	46					
	5	0	0	0	17	47					
	0	0	0	0	18	48					
	0	0	0	0	19	49					
	0	0	0	0	20	50					
	0	0	0	0	21	51					
	0	0	0	0	22	52					
	0	0	0	0	23	53					
	0	0	0	0	24	54					
	0	0	0	0	25	55					
BLACK	0	0	20	0	26	56					
	0	0	0	0	27	57					
	0	0	0	0	28	58					
	0	0	0	0	29	59					

Additional info (include steam dissipation point)

Observer's Signature

OCS Environmental, Inc.
Method 9 Source Layout Sketch

Date: 11/26/07

Observer Name: Chet Dulin

Begin Time: 12:30 Time End: 13:29

No Sun Visible Times
12:30
13:00
13:29

Observation Point

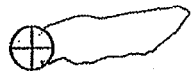

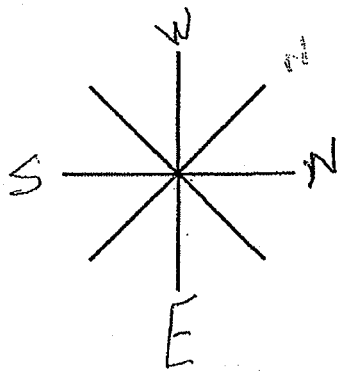

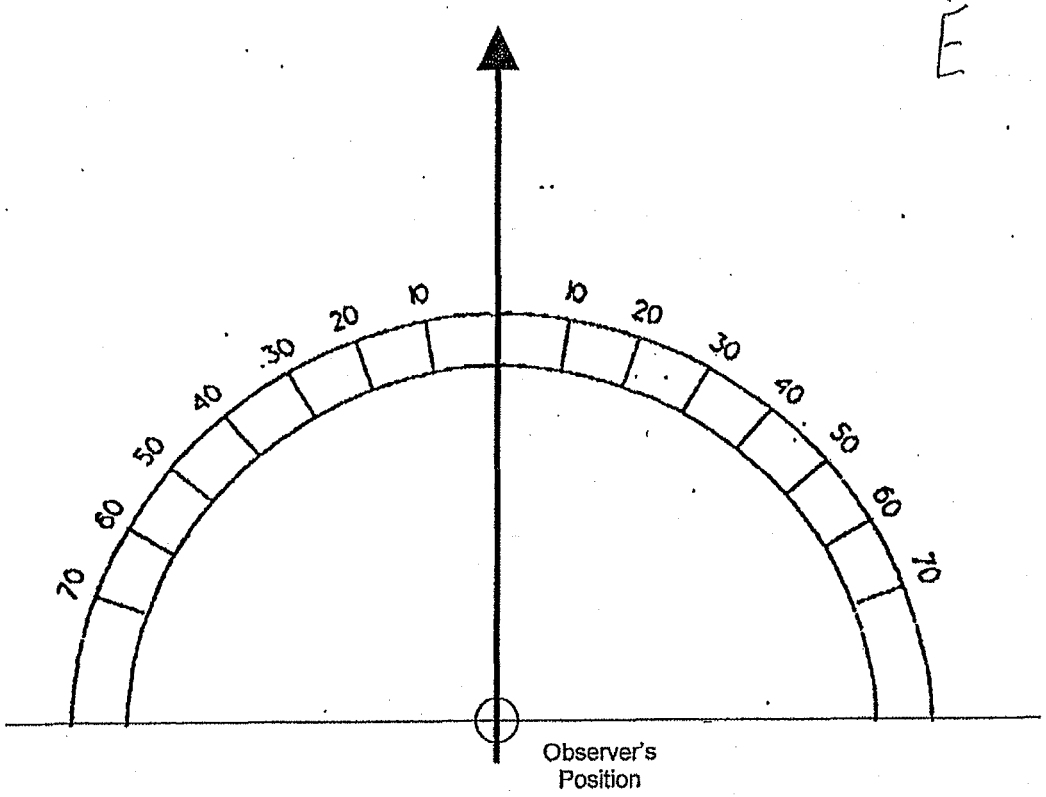

Signature: Chet Dulin

20071107 Method 9 Source Layout Sketch.doc

6-6

OCS Environmental, Inc.

U.S. Steel Gary Works
Emissions Inspection Summary

Date: 11 / 11 / 07

Start Time: 0635 (AM) / PM

End Time: 0735 (AM) / PM

No. 2 Precarbon ESP

BOP	Roof Monitor		Gas Cleaners	
QBOP	Roof Monitor		Gas Cleaners	
Blast Furnace	4	6	8	14
Blast Furnace Top	(4)	6	8	14

The following events or operations contributed to significant emissions:

Time	Heat/Cast Number	Operation	Comments
FCE. Top:	No Emissions	Observed	
Rel. Valve:	No Emissions	Observed	

20071107 Inspection Summary.doc

OCS Environmental, Inc.
Method 9 VE Inspection Form

Page 1 of 2

Date:	11-11-07
Source:	#4 BF
Observation Start Time:	0635
Observation End Time:	0659
Observer's Position:	East of Slip
Distance to source:	300yds
Direction to source:	West
Height of source:	—
Vertical angle to source:	—

	Start	End
Emissions color:	As Noted	Same
Background:	Sky	↓
Sky Conditions:	Overcast	↓
Wind Speed:	9	↓
Wind Direction:	South	↓
Ambient Temp:	41°	↓
Relative Humidity%:	96	↓
Wet Bulb Temp:	—	↓

Plume Type: (Attached) Detached None

Comments	0	15	30	45			0	15	30	45	Comments
					0	30					
					1	31					
					2	32					
					3	33					
					4	34					
					5	35	0	0	0	0	FCE. Top
					6	36	0	0	0	0	
					7	37	0	0	0	0	
					8	38	0	0	0	0	
					9	39	0	0	0	0	
					10	40	0	0	0	0	
					11	41	0	0	0	0	
					12	42	0	0	0	0	
					13	43	0	0	0	0	
					14	44	0	0	0	0	
					15	45	0	0	0	0	
					16	46	0	0	0	0	
					17	47	0	0	0	0	
					18	48	0	0	0	0	
					19	49	0	0	0	0	
					20	50	0	0	0	0	
					21	51	0	0	0	0	
					22	52	0	0	0	0	
					23	53	0	0	0	0	
					24	54	0	0	0	0	
					25	55	0	0	0	0	
					26	56	0	0	0	0	
					27	57	0	0	0	0	
					28	58	0	0	0	0	
					29	59	0	0	0	0	

Additional info (include steam dissipation point)

Observer's Signature: Kevin Davis

20071107 Method 9 Inspection Form.doc

OCS Environmental, Inc.
Method 9 VE Inspection Form

			Start	End
Date:	11-11-07			
Source:	#4BP	Emissions color:	As Noted	Same
Observation Start Time:	0700	Background:	Sky	↓
Observation End Time:	0734	Sky Conditions:	Overcast	↓
Observer's Position:	East of Slip	Wind Speed:	9	↓
Distance to source:	300 yds	Wind Direction:	South	↓
Direction to source:	west	Ambient Temp:	41°	↓
		Relative Humidity%:	96	↓
Height of source:	—	Wet Bulb Temp:	—	↓
Vertical angle to source:	—			

Plume Type: Attached Detached None

Comments	0	15	30	45			0	15	30	45	Comments
	0	0	0	0	0	30	0	0	0	0	
	0	0	0	0	1	31	0	0	0	0	
	0	0	0	0	2	32	0	0	0	0	
	0	0	0	0	3	33	0	0	0	0	
	0	0	0	0	4	34	0	0	0	0	
Rel. Valve:	0	0	0	0	5	35					
	0	0	0	0	6	36					
	0	0	0	0	7	37					
	0	0	0	0	8	38					
	0	0	0	0	9	39					
	0	0	0	0	10	40					
	0	0	0	0	11	41					
	0	0	0	0	12	42					
	0	0	0	0	13	43					
	0	0	0	0	14	44					
	0	0	0	0	15	45					
	0	0	0	0	16	46					
	0	0	0	0	17	47					
	0	0	0	0	18	48					
	0	0	0	0	19	49					
	0	0	0	0	20	50					
	0	0	0	0	21	51					
	0	0	0	0	22	52					
	0	0	0	0	23	53					
	0	0	0	0	24	54					
	0	0	0	0	25	55					
	0	0	0	0	26	56					
	0	0	0	0	27	57					
	0	0	0	0	28	58					
	0	0	0	0	29	59					

Additional info (include steam dissipation point)

Observer's Signature: Kevin Davis

20071107 Method 9 Inspection Form.doc

OCS Environmental, Inc.
Method 9 Source Layout Sketch

Date: 11 / 11 / 07

Observer Name: K. Davis

Begin Time: 0635

Time End: 0735

No Sun Visible Times
0635
0705

Observation Point

South @ 9mph

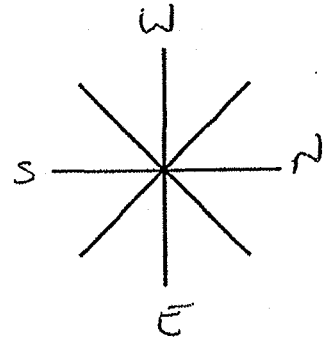

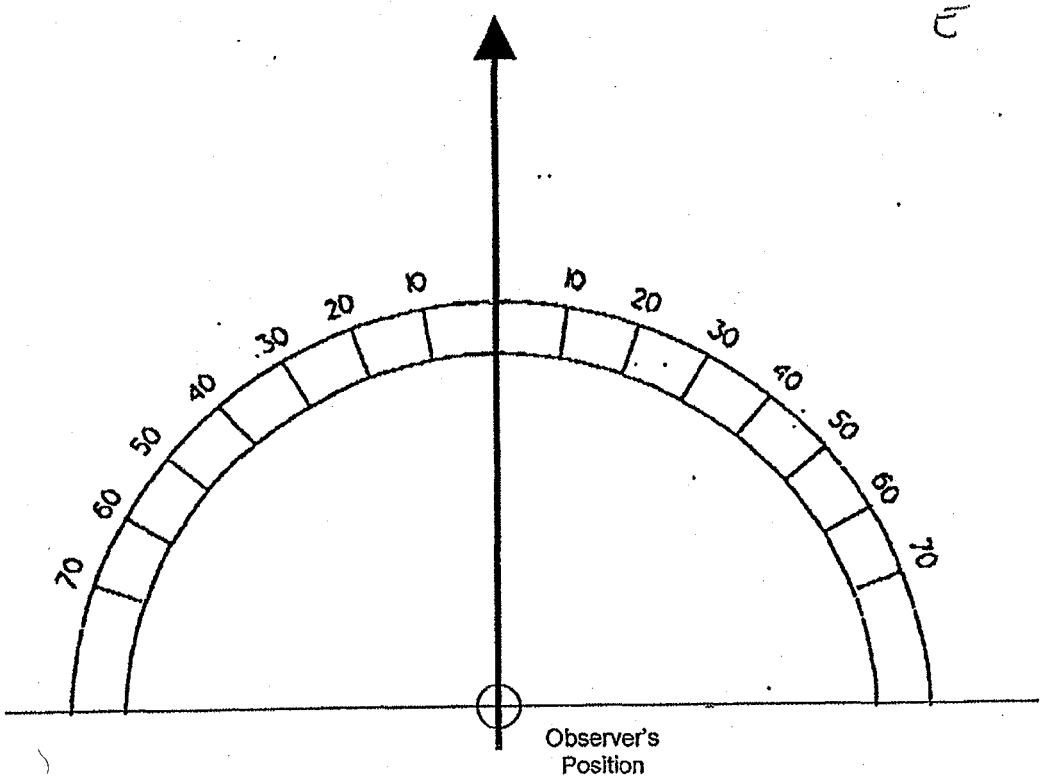

Signature: Kevin Davis

20071107 Method 9 Source Layout Sketch.doc

6-9

OCS Environmental, Inc.

U.S. Steel Gary Works
Emissions Inspection Summary

Date: 11/14/07

Start Time: 10:00 AM / PM

End Time: 10:59 AM / PM

BOP	Roof Monitor		Gas Cleaners	
QBOP	Roof Monitor		Gas Cleaners	
Blast Furnace	4	6	8	14
Blast Furnace Top	4	6	8	14

The following events or operations contributed to significant emissions:

Time	Heat/Cast Number	Operation	Comments

20071107 Inspection Summary.doc

OCS Environmental, Inc.
Method 9 VE Inspection Form

Page 1 of 1

Date:	11-14-07
Source:	#8 BFC.
Observation Start Time:	10:00
Observation End Time:	10:59
Observed Point:	8BF2
Distance to source:	350 YDS
Direction to source:	W 310°
Height of source:	59'
Vertical angle to source:	6°

	Start	End
Emissions color:	AS NOTED	SAME
Background:	SKY	SKY
Sky Conditions:	CLOUDY	CLOUDY
Wind Speed:	9 MPH	9 MPH
Wind Direction:	W	W
Ambient Temp:	53°	55°
Relative Humidity%:	79%	79%
Wet Bulb Temp:		

Plume Type: Attached Detached None

Comments	0	15	30	45			0	15	30	45	Comments
Relief Valve START	0	0	0	0	0	30	0	0	0	0	TOP START
	0	0	0	0	1	31	10	10	0	0	GRAY
	0	0	0	0	2	32	0	0	0	0	
	0	0	0	0	3	33	0	0	5	0	GRAY
	0	0	0	0	4	34	0	0	0	0	
	0	0	0	0	5	35	0	0	0	0	
	0	0	0	0	6	36	0	0	0	0	
GRAY	0	10	0	0	7	37	0	0	0	0	
"	0	5	0	0	8	38	0	0	0	0	
"	0	20	0	0	9	39	0	15	5	0	BLACK
	0	0	0	0	10	40	0	0	0	0	
	0	0	0	0	11	41	0	0	0	0	
	0	0	0	0	12	42	0	0	0	0	
	0	0	0	0	13	43	0	0	0	0	
	0	0	0	0	14	44	0	0	0	5	GRAY
	0	0	0	0	15	45	5	0	0	0	"
	0	0	0	0	16	46	0	0	0	0	
	0	0	0	0	17	47	0	0	0	0	
GRAY	0	10	0	0	18	48	0	0	0	0	
	0	0	0	0	19	49	0	0	0	0	
	0	0	0	20	20	50	0	0	0	0	
	0	0	0	0	21	51	0	0	0	0	
	0	0	0	0	22	52	0	0	0	0	
	0	0	0	0	23	53	0	0	0	0	
	0	0	0	0	24	54	0	0	0	0	
	0	0	0	0	25	55	0	0	0	0	
	0	0	0	0	26	56	0	0	0	0	
	0	0	0	0	27	57	0	0	5	0	GRAY
	0	0	0	0	28	58	0	0	0	0	
	0	0	0	0	29	59	0	0	0	0	

Additional Info (include steam dissipation point)

Observer's Signature: Chet Mulin

20071107 Method 9 Inspection Form.doc

#8 TOP.

OCS Environmental, Inc.
Method 9 Source Layout Sketch

Date: 10, 14, 07

Observer Name: Chet Dubin

Begin Time: 10:00

Time End: 10:59

No Sun Visible Times

Observation Point

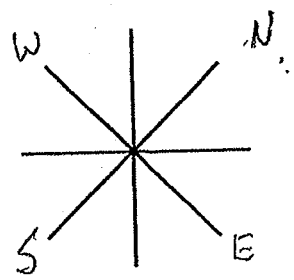

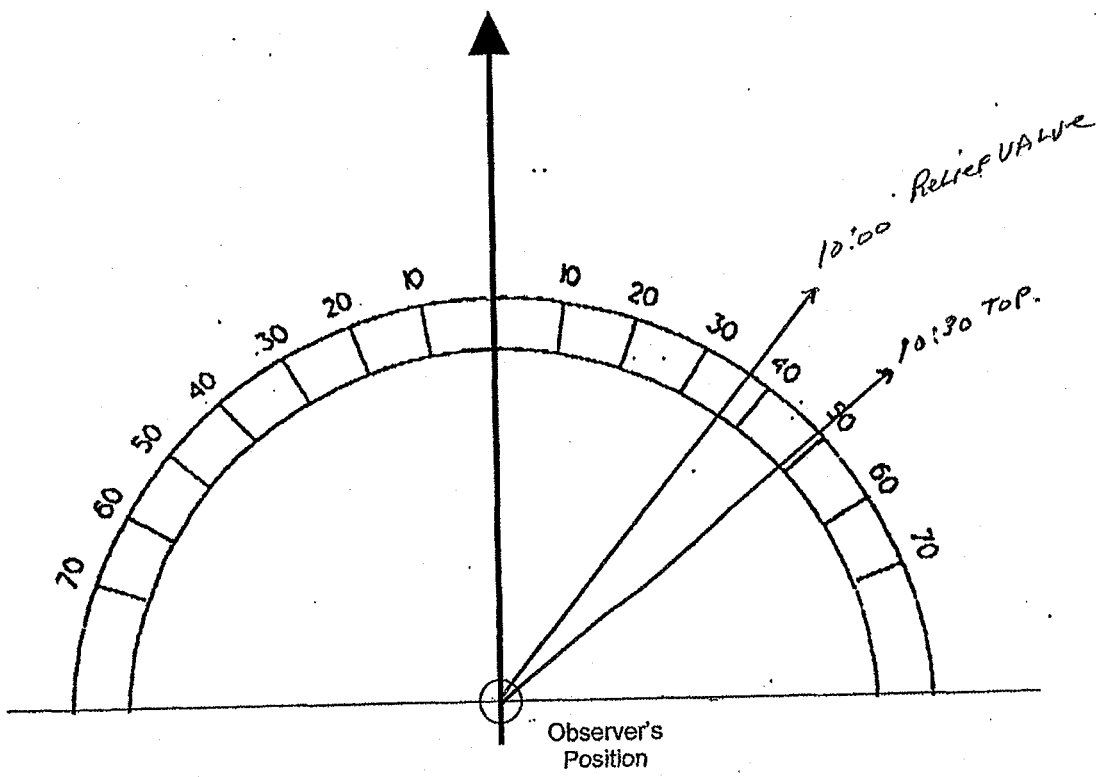

Signature: Chet Dubin

20071107 Method 9 Source Layout Sketch.doc

6-10

OCS Environmental, Inc.

U.S. Steel Gary Works
Emissions Inspection Summary

Date: 11/13/07

Start Time: 13:00 AM / PM

End Time: 13:59 AM / PM

No. 2 Precarbon ESP

BOP	Roof Monitor		Gas Cleaners	
QBOP	Roof Monitor		Gas Cleaners	
Blast Furnace	4	6	8	14
Blast Furnace Top	4	6	8	14

The following events or operations contributed to significant emissions:

Time	Heat/Cast Number	Operation	Comments

20071107 Inspection Summary.doc

OCS Environmental, Inc.
Method 9 VE Inspection Form

Page 1 of 1

			Start	End
Date:	11-13-07	Emissions color:	AS NOTED	SAME
Source:	#4 BFCC	Background:	SKY	
Observation Start Time:	13:00	Sky Conditions:	PTLY CLOUDY	
Observation End Time:	13:59	Wind Speed:	0-5	
Observer's Position:	BF1	Wind Direction:	S	
Distance to source:	320 YDS	Ambient Temp:	62°	
Direction to source:	NW 320°	Relative Humidity%:	85	
		Wet Bulb Temp:		
Height of source:	63'			
Vertical angle to source:	5°			

Plume Type: Attached Detached None

Comments	0	15	30	45			0	15	30	45	Comments
	0	0	0	0	0	30	0	0	0	0	
	0	0	0	0	1	31	0	0	0	0	
	0	0	0	0	2	32	0	0	0	0	
	0	0	0	0	3	33	0	0	0	0	
	0	0	0	0	4	34	0	0	0	0	
	0	0	0	0	5	35	0	0	0	0	
	0	0	0	0	6	36	0	0	0	0	
	0	0	0	0	7	37	0	0	0	0	
	0	0	0	0	8	38	0	0	0	0	
	0	0	0	0	9	39	0	0	0	0	
	0	0	0	0	10	40	0	0	0	0	
	0	0	0	0	11	41	0	0	0	0	
	0	0	0	0	12	42	0	0	0	0	
	0	0	0	0	13	43	0	0	0	0	
	0	0	0	0	14	44	0	0	0	0	
	0	0	0	0	15	45	0	0	0	0	
	0	0	0	0	16	46	0	0	0	0	
	0	0	0	0	17	47	0	0	0	0	
	0	0	0	0	18	48	0	0	0	0	
	0	0	0	0	19	49	0	0	0	0	
	0	0	0	0	20	50	0	0	0	0	
	0	0	0	0	21	51	0	0	0	0	
	0	0	0	0	22	52	0	0	0	0	
	0	0	0	0	23	53	0	0	0	0	
	0	0	0	0	24	54	0	0	0	0	
	0	0	0	0	25	55	0	0	0	0	
	0	0	0	0	26	56	0	0	0	0	
	0	0	0	0	27	57	0	0	0	0	
	0	0	0	0	28	58	0	0	0	0	
	0	0	0	0	29	59	0	0	0	0	

Additional info (include steam dissipation point)

Observer's Signature

20071107 Method 9 Inspection Form.doc

OCS Environmental, Inc.
Method 9 Source Layout Sketch

Date: 11/13/07

Observer Name: Chet Dulin

Begin Time: 13:00 Time End: 13:59

No Sun Visible Times

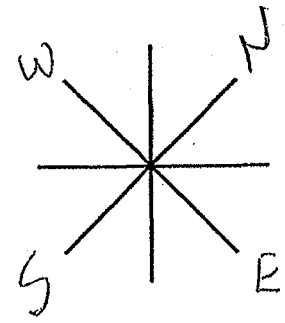

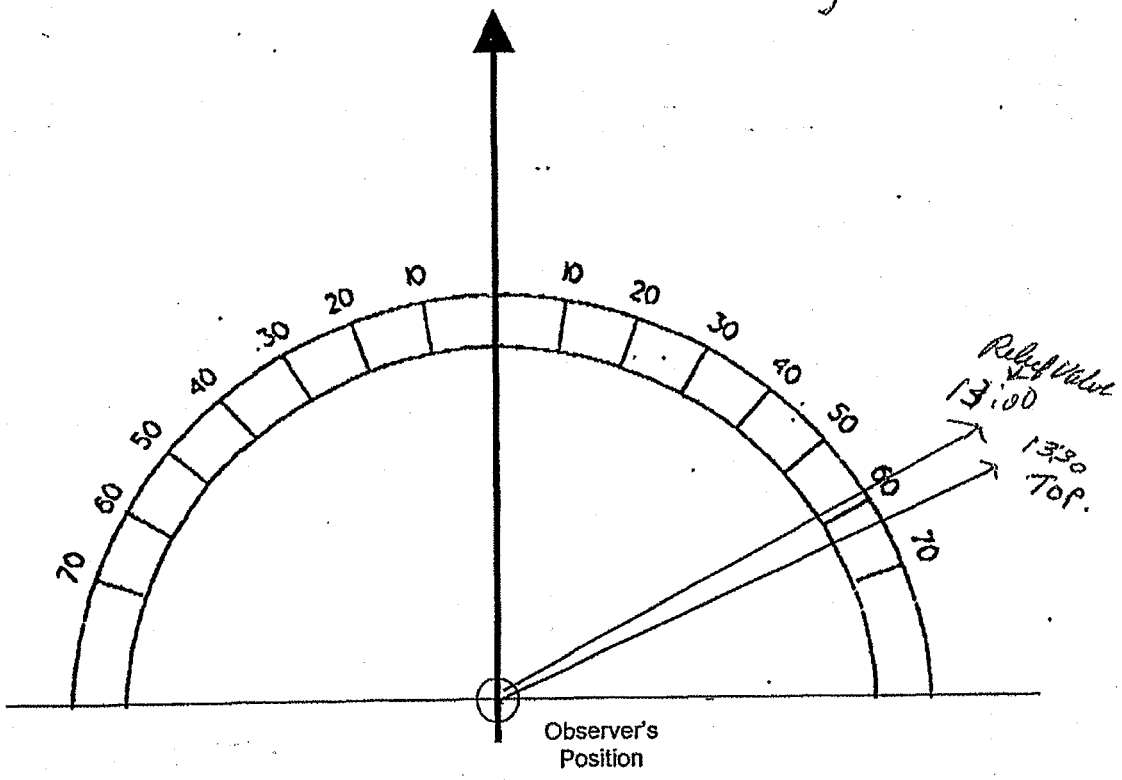

Signature: Chet Dulin

20071107 Method 9 Source Layout Sketch.doc

6-11

OCS Environmental, Inc.

U.S. Steel Gary Works
Emissions Inspection Summary

Date: 11 / 19 / 07

Start Time: 0900 (AM) / PM

End Time: 1000 (AM) / PM

No. 2 Precarbon ESP

BOP	Roof Monitor		Gas Cleaners	
QBOP	Roof Monitor		Gas Cleaners	
Blast Furnace	4	6	8	14
Blast Furnace Top	4	6	8	14

The following events or operations contributed to significant emissions:

Time	Heat/Cast Number	Operation	Comments
FCE. Top:	No Emissions		
Rel. Valve:	No Emissions		

20071107 Inspection Summary.doc

OCS Environmental, Inc.
Method 9 VE Inspection Form

Page 1 of 1

			Start	End
Date:	11-19-07			
Source:	# 8BF FceTop/Rel Valve	Emissions color:	As Noted	Same
Observation Start Time:	0900	Background:	Sky	
Observation End Time:	0959	Sky Conditions:	Overcast	
Observer's Position:	East of Slip	Wind Speed:	10	
Distance to source:	320yds	Wind Direction:	SW	
Direction to source:	West	Ambient Temp:	42	
		Relative Humidity%:	100	
Height of source:	—	Wet Bulb Temp:	—	
Vertical angle to source:	—			

Plume Type: Attached Detached None

Comments	0	15	30	45			0	15	30	45	Comments
FceTops	0	0	0	0	0	30	0	0	0	0	Rel. Valve
	0	0	0	0	1	31	0	0	0	0	
	0	0	0	0	2	32	0	0	0	0	
	0	0	0	0	3	33	0	0	0	0	
	0	0	0	0	4	34	0	0	0	0	
	0	0	0	0	5	35	0	0	0	0	
	0	0	0	0	6	36	0	0	0	0	
	0	0	0	0	7	37	0	0	0	0	
	0	0	0	0	8	38	0	0	0	0	
	0	0	0	0	9	39	0	0	0	0	
	0	0	0	0	10	40	0	0	0	0	
	0	0	0	0	11	41	0	0	0	0	
	0	0	0	0	12	42	0	0	0	0	
	0	0	0	0	13	43	0	0	0	0	
	0	0	0	0	14	44	0	0	0	0	
	0	0	0	0	15	45	0	0	0	0	
	0	0	0	0	16	46	0	0	0	0	
	0	0	0	0	17	47	0	0	0	0	
	0	0	0	0	18	48	0	0	0	0	
	0	0	0	0	19	49	0	0	0	0	
	0	0	0	0	20	50	0	0	0	0	
	0	0	0	0	21	51	0	0	0	0	
	0	0	0	0	22	52	0	0	0	0	
	0	0	0	0	23	53	0	0	0	0	
	0	0	0	0	24	54	0	0	0	0	
	0	0	0	0	25	55	0	0	0	0	
	0	0	0	0	26	56	0	0	0	0	
	0	0	0	0	27	57	0	0	0	0	
	0	0	0	0	28	58	0	0	0	0	
	0	0	0	0	29	59	0	0	0	0	

Additional info (include steam dissipation point)

Observer's Signature: Kevin Davis

20071107 Method 9 Inspection Form.doc

OCS Environmental, Inc.
Method 9 Source Layout Sketch

Date: 11 / 19 / 07

Observer Name: K. Davis

Begin Time: 0900 Time End: 1000

No Sun Visible Times
0900
0930

Observation Point

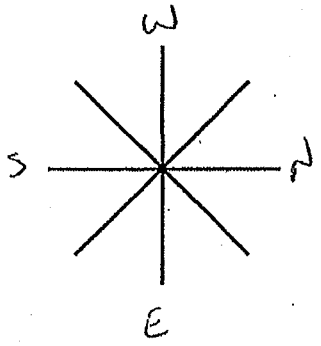

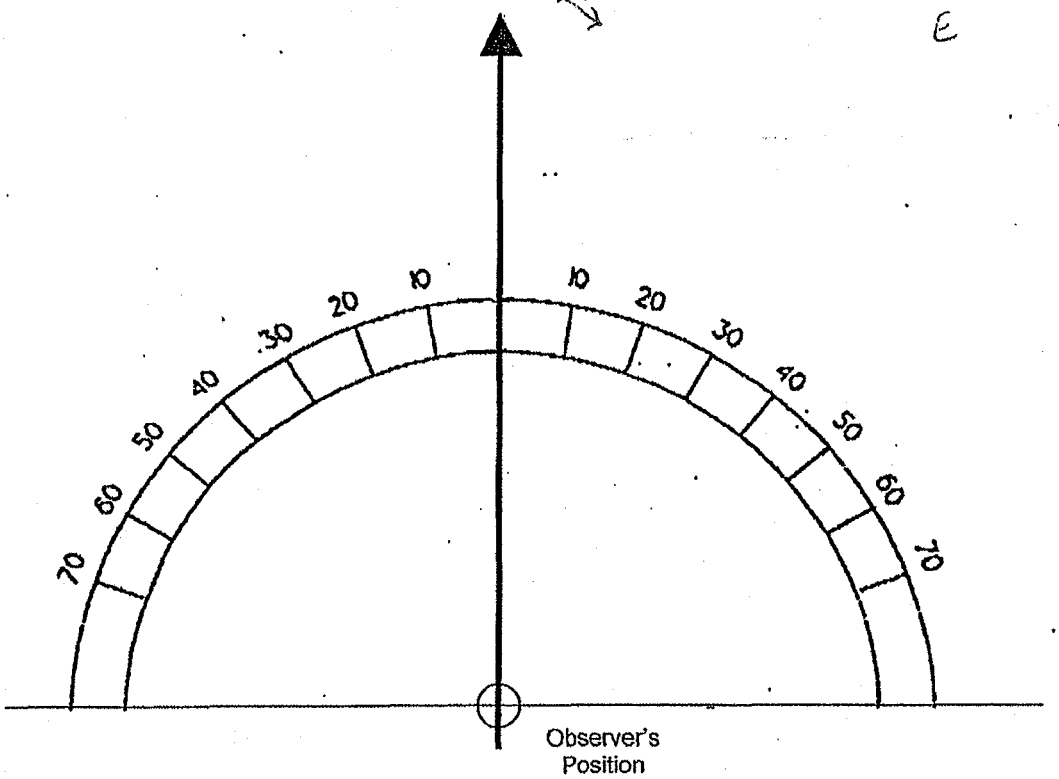

Signature: Kevin Davis

20071107 Method 9 Source Layout Sketch.doc

6-12

OCS Environmental, Inc.

U.S. Steel Gary Works
Emissions Inspection Summary

Date: 12/02/07

Start Time: 0730 AM / PM

End Time: 0829 AM / PM

No. 2 Precarbon ESP

BOP	Roof Monitor		Gas Cleaners	
QBOP	Roof Monitor		Gas Cleaners	
Blast Furnace	4	6	8	14
Blast Furnace Top	4	6	8	14

The following events or operations contributed to significant emissions:

Time	Heat/Cast Number	Operation	Comments

20071107 Inspection Summary.doc

OCS Environmental, Inc.
Method 9 VE Inspection Form

Page 1 of 1

			Start	End
Date:	12-02-07	Emissions color:	As Noted	
Source:	tk 4 BRCE Rel Vul. 07CE18	Background:	Sky	Same
Observation Start Time:	0730	Sky Conditions:	Overcast	
Observation End Time:	0824	Wind Speed:	3-18	
Observer's Position:	East of SCIP	Wind Direction:	SW	
Distance to source:	375 yds	Ambient Temp:	44-48	
Direction to source:	West	Relative Humidity%:	85%	
		Wet Bulb Temp:	—	
Height of source:	—			
Vertical angle to source:	—			

Plume Type: Attached Detached None

Comments	0	15	30	45			0	15	30	45	Comments
Rel Vulve 0730	0	0	0	0	0	30	0	0	0	0	0800 7CGTOP
	0	0	0	0	1	31	0	0	0	0	
	0	0	0	0	2	32	0	0	0	0	
	0	0	0	0	3	33	0	0	0	0	
	0	0	0	0	4	34	0	0	0	0	
35	0	0	0	0	5	35	0	0	0	0	05
	0	0	0	0	6	36	0	0	0	0	
	0	0	0	0	7	37	0	0	0	0	
	0	0	0	0	8	38	0	0	0	0	
	0	0	0	0	9	39	0	0	0	0	
40	0	0	0	0	10	40	0	0	0	0	10
40	0	0	0	0	11	41	0	0	0	0	
	0	0	0	0	12	42	0	0	0	0	
	0	0	0	0	13	43	0	0	0	0	
	0	0	0	0	14	44	0	0	0	0	
45	0	0	0	0	15	45	0	0	0	0	15
	0	0	0	0	16	46	0	0	0	0	
	0	0	0	0	17	47	0	0	0	0	
	0	0	0	0	18	48	0	0	0	0	
	0	0	0	0	19	49	0	0	0	0	
50	0	0	0	0	20	50	0	0	0	0	20
	0	0	0	0	21	51	0	0	0	0	
	0	0	0	0	22	52	0	0	0	0	
	0	0	0	0	23	53	0	0	0	0	
	0	0	0	0	24	54	0	0	0	0	
55	0	0	0	0	25	55	0	0	0	0	25
	0	0	0	0	26	56	0	0	0	0	
	0	0	0	0	27	57	0	0	0	0	
	0	0	0	0	28	58	0	0	0	0	
	0	0	0	0	29	59	0	0	0	0	

Additional info (include steam dissipation point)

Observer's Signature

20071107 Method 9 Inspection Form.doc

OCS Environmental, Inc.
Method 9 Source Layout Sketch

Date: 12 / 02 / 07

Observer Name: J. SKALK

Begin Time: 0730

Time End: 0829

No Sun Visible Times
0730
0829

Observation Point

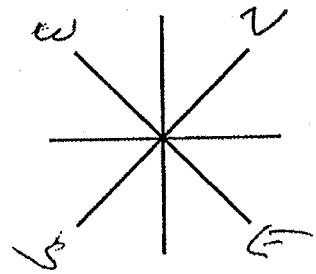

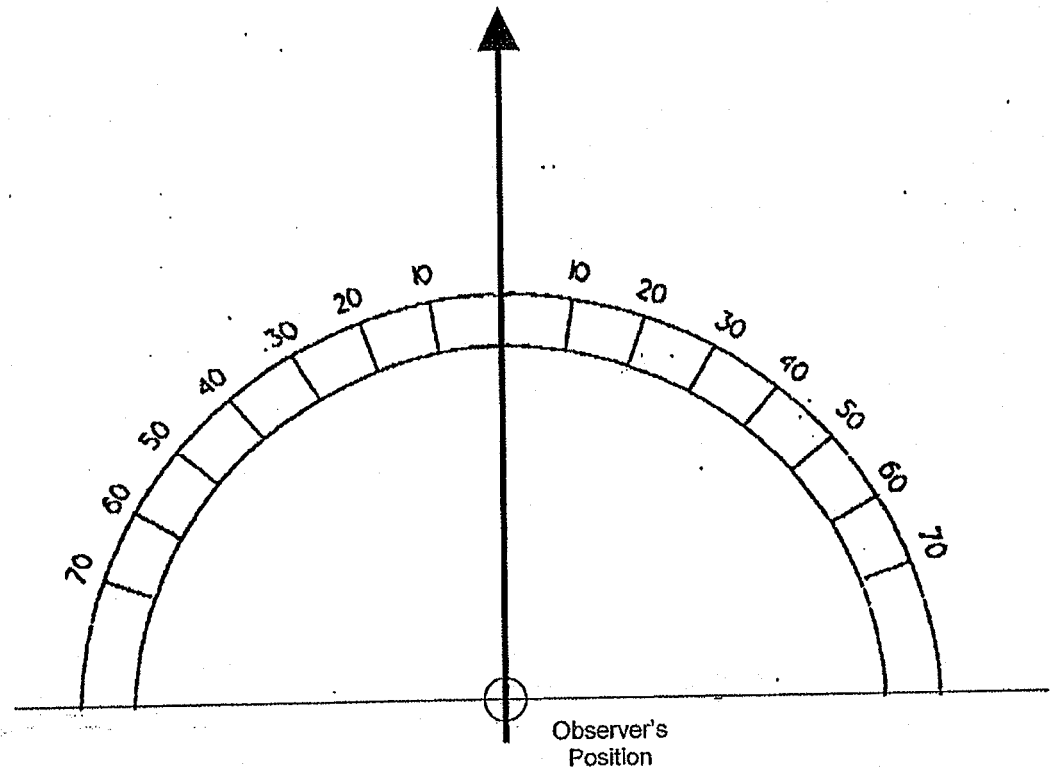

Signature:

20071107 Method 9 Source Layout Sketch.doc

6 - 13

OCS Environmental, Inc.

U.S. Steel Gary Works
Emissions Inspection Summary

Date: 11 / 25 / 07

Start Time: 0745 AM / PM

End Time: 0844 AM / PM

No. 2 Precarbon ESP

BOP	Roof Monitor		Gas Cleaners	
QBOP	Roof Monitor		Gas Cleaners	
Blast Furnace	4	6	8	14
Blast Furnace Top	4	6	8	14

The following events or operations contributed to significant emissions:

Time	Heat/Cast Number	Operation	Comments

20071107 Inspection Summary.doc

OCS Environmental, Inc.
Method 9 VE Inspection Form

Page 1 of 1

			Start	End
Date:	11-25-07			
Source:	BRCE Rel. V/K/C-FCF	Emissions color:		
Observation Start Time:	0745	Background:	As Noted	Same
Observation End Time:	0844	Sky Conditions:	Clear	
Observer's Position:	SE of Source	Wind Speed:	3-7	
Distance to source:	375 yds	Wind Direction:	SW	
Direction to source:	NW	Ambient Temp:	28-32	
		Relative Humidity%:	80%	
Height of source:	150'	Wet Bulb Temp:	NA	
Vertical angle to source:	—			

Plume Type: Attached Detached None

Comments	0	15	30	45			0	15	30	45	Comments
Rel. V/K/C 0745	0	0	0	0	0	30	0	0	0	0	0815 FCF Fan
	0	0	0	0	1	31	0	0	0	0	
	0	0	0	0	2	32	0	0	0	0	
	0	0	0	0	3	33	0	0	0	0	
	0	0	0	0	4	34	0	0	0	0	
50	0	0	0	0	5	35	0	0	0	0	20
	0	0	0	0	6	36	0	0	0	0	
	0	0	0	0	7	37	0	0	0	0	
	0	0	0	0	8	38	0	0	0	0	
	0	0	0	0	9	39	0	0	0	0	
55	0	0	0	0	10	40	0	0	0	0	25
	0	0	0	0	11	41	0	0	0	0	
	0	0	0	0	12	42	0	0	0	0	
	0	0	0	0	13	43	0	0	0	0	
	0	0	0	0	14	44	0	0	0	0	
0800	0	0	0	0	15	45	0	0	0	0	30
	0	0	0	0	16	46	0	0	0	0	
	0	0	0	0	17	47	0	0	0	0	
	0	0	0	0	18	48	0	0	0	0	
	0	0	0	0	19	49	0	0	0	0	
05	0	0	0	0	20	50	0	0	0	0	35
	0	0	0	0	21	51	0	0	0	0	
	0	0	0	0	22	52	0	0	0	0	
	0	0	0	0	23	53	0	0	0	0	
	0	0	0	0	24	54	0	0	0	0	
10	0	0	0	0	25	55	0	0	0	0	40
	0	0	0	0	26	56	0	0	0	0	
	0	0	0	0	27	57	0	0	0	0	
	0	0	0	0	28	58	0	0	0	0	
	0	0	0	0	29	59	0	0	0	0	

Additional info (include steam dissipation point)

Observer's Signature

20071107 Method 9 Inspection Form.doc

OCS Environmental, Inc.
Method 9 Source Layout Sketch

Date: 11 1251 07

Observer Name: J. SKALIK

Begin Time: 0745

Time End: 0844

No Sun Visible Times

Observation Point

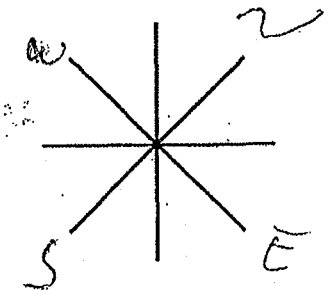

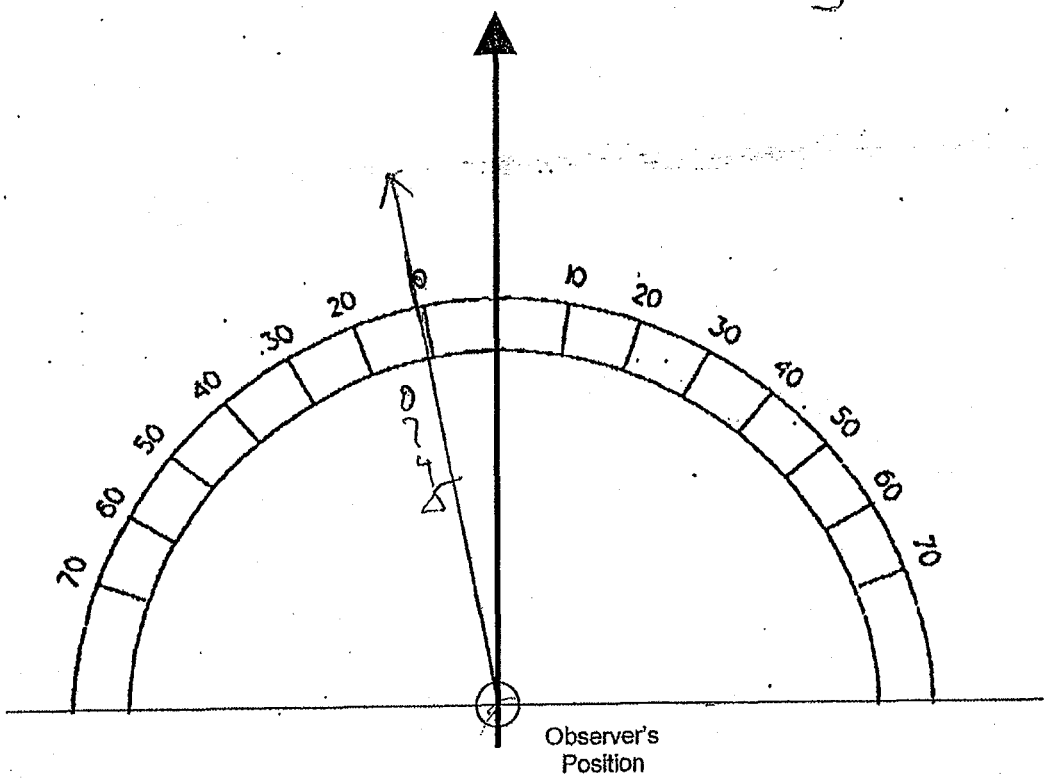

Signature: [signature]

20071107 Method 9 Source Layout Sketch.doc

6-14

OCS Environmental, Inc.

U.S. Steel Gary Works
Emissions Inspection Summary

Date: 11/27/07

Start Time: 1200 AM / PM

End Time: 1300 AM / PM

No. 2 Precarbon ESP

BOP	Roof Monitor		Gas Cleaners	
QBOP	Roof Monitor		Gas Cleaners	
Blast Furnace	4	6	8	14
Blast Furnace Top	4	6	8	14

The following events or operations contributed to significant emissions:

Time	Heat/Cast Number	Operation	Comments
Fce. Top:	No Emissions	Observed	
Rel. Valve:	No Emissions	Observed	

20071107 Inspection Summary.doc

OCS Environmental, Inc.
Method 9 VE Inspection Form

Page 1 of 1

			Start	End
Date:	11-27-07			
Source:	#8BF Fce Top Rel. Valve	Emissions color:	As Noted	Same
Observation Start Time:	1200	Background:	Sky	
Observation End Time:	1300	Sky Conditions:	Partly	
Observer's Position:	East of Slip	Wind Speed:	8	
Distance to source:	300yds	Wind Direction:	NW	
Direction to source:	West	Ambient Temp:	36	
		Relative Humidity%:	51	
Height of source:	—	Wet Bulb Temp:	—	
Vertical angle to source:	—			

Plume Type: (Attached) Detached None

Comments	0	15	30	45			0	15	30	45	Comments
Fce. Top	0	0	0	0	0	30	0	0	0	0	Rel. Valve
	0	0	0	0	1	31	0	0	0	0	
	0	0	0	0	2	32	0	0	0	0	
	0	0	0	0	3	33	0	0	0	0	
	0	0	0	0	4	34	0	0	0	0	
	0	0	0	0	5	35	0	0	0	0	
	0	0	0	0	6	36	0	0	0	0	
	0	0	0	0	7	37	0	0	0	0	
	0	0	0	0	8	38	0	0	0	0	
	0	0	0	0	9	39	0	0	0	0	
	0	0	0	0	10	40	0	0	0	0	
	0	0	0	0	11	41	0	0	0	0	
	0	0	0	0	12	42	0	0	0	0	
	0	0	0	0	13	43	0	0	0	0	
	0	0	0	0	14	44	0	0	0	0	
	0	0	0	0	15	45	0	0	0	0	
	0	0	0	0	16	46	0	0	0	0	
	0	0	0	0	17	47	0	0	0	0	
	0	0	0	0	18	48	0	0	0	0	
	0	0	0	0	19	49	0	0	0	0	
	0	0	0	0	20	50	0	0	0	0	
	0	0	0	0	21	51	0	0	0	0	
	0	0	0	0	22	52	0	0	0	0	
	0	0	0	0	23	53	0	0	0	0	
	0	0	0	0	24	54	0	0	0	0	
	0	0	0	0	25	55	0	0	0	0	
	0	0	0	0	26	56	0	0	0	0	
	0	0	0	0	27	57	0	0	0	0	
	0	0	0	0	28	58	0	0	0	0	
	0	0	0	0	29	59	0	0	0	0	

Additional info (include steam dissipation point)

Observer's Signature: Kevin Davis

20071107 Method 9 Inspection Form.doc

OCS Environmental, Inc.
Method 9 Source Layout Sketch

Date: 11/27/07

Observer Name: K. Davis

Begin Time: 1200 Time End: 1300

No Sun Visible Times

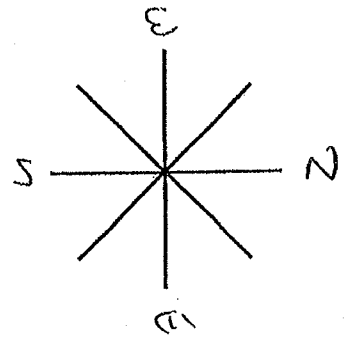

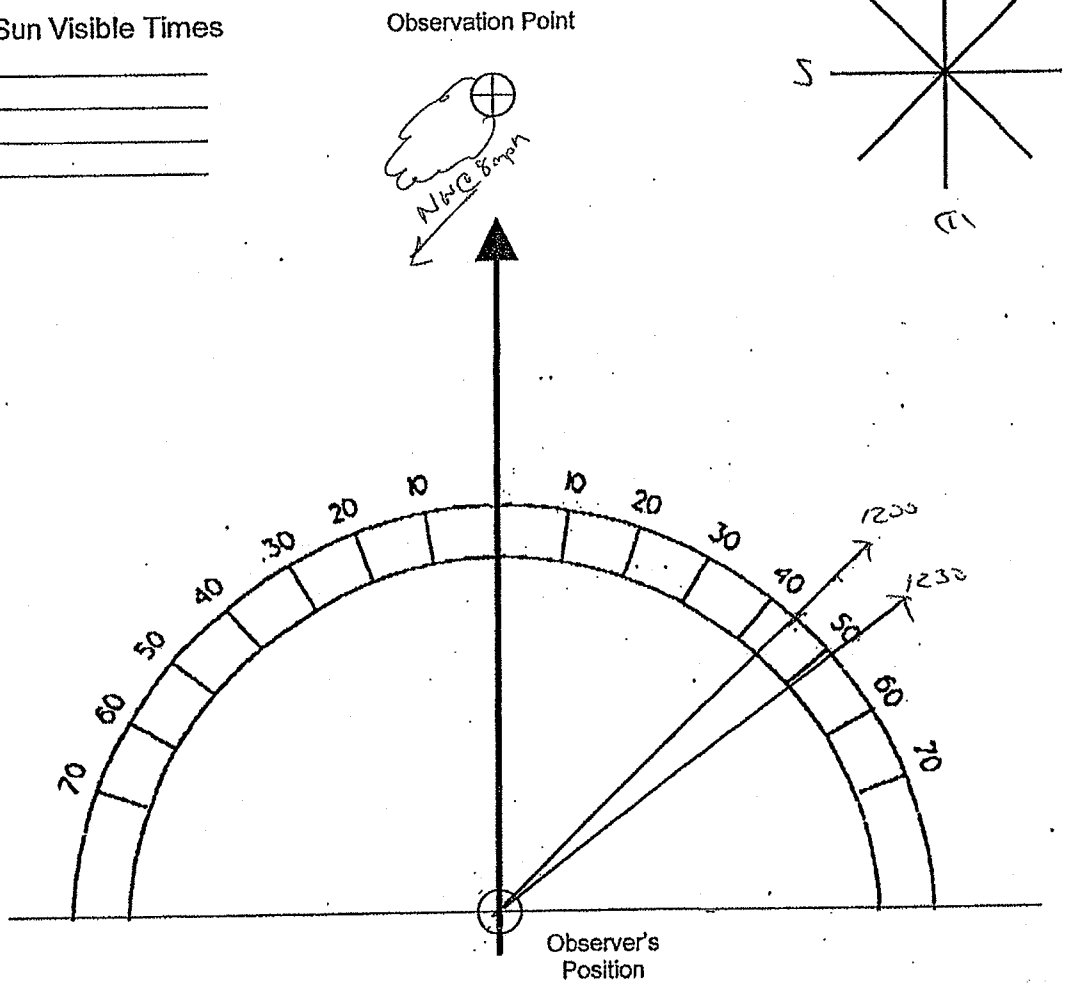

Signature: Kevin Davis

20071107 Method 9 Source Layout Sketch.doc

6-15

OCS Environmental, Inc.

U.S. Steel Gary Works
Emissions Inspection Summary

Date: 11/20/07

Start Time: 0900 (AM) / PM

End Time: 1000 (AM) / PM

No. 2 Precarbon ESP

BOP	Roof Monitor		Gas Cleaners	
QBOP	Roof Monitor		Gas Cleaners	
Blast Furnace	4	6	8	14
Blast Furnace Top	4	6	8	14

The following events or operations contributed to significant emissions:

Time	Heat/Cast Number	Operation	Comments
FCE. Top:	No Emissions	Observed	
Rel. Valve:	No Emissions	Observed	

20071107 Inspection Summary.doc

OCS Environmental, Inc.
Method 9 VE Inspection Form

Page 1 of 1

			Start	End
Date:	11-20-07			
Source:	#4BF Fce Top/Rel Valve	Emissions color:	As Noted	Same
Observation Start Time:	0900	Background:	Sky	↓
Observation End Time:	0959	Sky Conditions:	Overcast	↓
Observer's Position:	East of Slip	Wind Speed:	4	↓
Distance to source:	320yds	Wind Direction:	East	↓
Direction to source:	NW 320° Mag North	Ambient Temp:	47°	↓
		Relative Humidity%:		↓
Height of source:	—	Wet Bulb Temp:	—	↓
Vertical angle to source:	—			

Plume Type: (Attached) Detached None

Comments	0	15	30	45			0	15	30	45	Comments
Fce. Top	0	0	0	0	0	30	0	0	0	0	Rel. Valve
	0	0	0	0	1	31	0	0	0	0	
	0	0	0	0	2	32	0	0	0	0	
	0	0	0	0	3	33	0	0	0	0	
	0	0	0	0	4	34	0	0	0	0	
	0	0	0	0	5	35	0	0	0	0	
	0	0	0	0	6	36	0	0	0	0	
	0	0	0	0	7	37	0	0	0	0	
	0	0	0	0	8	38	0	0	0	0	
	0	0	0	0	9	39	0	0	0	0	
	0	0	0	0	10	40	0	0	0	0	
	0	0	0	0	11	41	0	0	0	0	
	0	0	0	0	12	42	0	0	0	0	
	0	0	0	0	13	43	0	0	0	0	
	0	0	0	0	14	44	0	0	0	0	
	0	0	0	0	15	45	0	0	0	0	
	0	0	0	0	16	46	0	0	0	0	
	0	0	0	0	17	47	0	0	0	0	
	0	0	0	0	18	48	0	0	0	0	
	0	0	0	0	19	49	0	0	0	0	
	0	0	0	0	20	50	0	0	0	0	
	0	0	0	0	21	51	0	0	0	0	
	0	0	0	0	22	52	0	0	0	0	
	0	0	0	0	23	53	0	0	0	0	
	0	0	0	0	24	54	0	0	0	0	
	0	0	0	0	25	55	0	0	0	0	
	0	0	0	0	26	56	0	0	0	0	
	0	0	0	0	27	57	0	0	0	0	
	0	0	0	0	28	58	0	0	0	0	
	0	0	0	0	29	59	0	0	0	0	

Additional info (include steam dissipation point)

Observer's Signature: Kevin Davis

20071107 Method 9 Inspection Form.doc

OCS Environmental, Inc.
Method 9 Source Layout Sketch

Date: 11 / 20 / 07

Observer Name: K. Davis

Begin Time: 0900

Time End: 1000

No Sun Visible Times
0900
0930

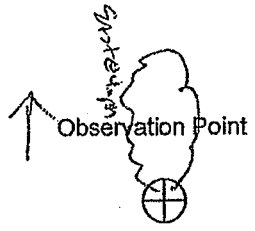

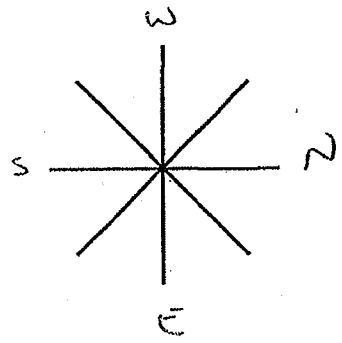

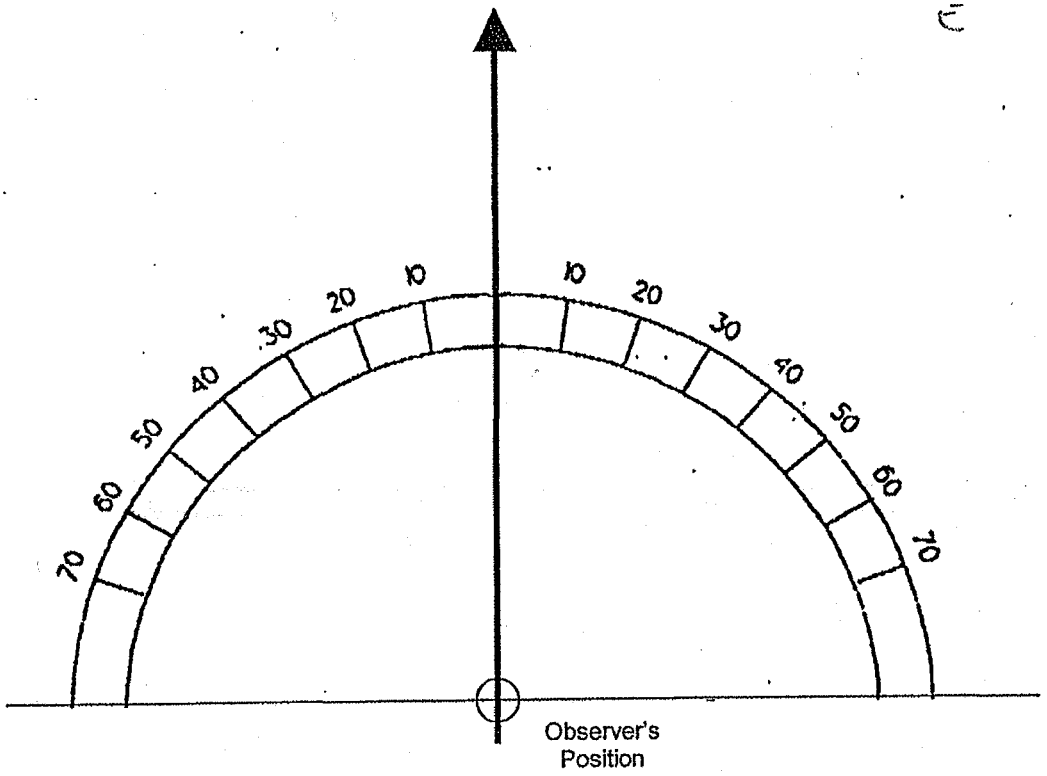

Signature: Kevin Davis

20071107 Method 9 Source Layout Sketch.doc

6-14

OCS Environmental, Inc.

U.S. Steel Gary Works
Emissions Inspection Summary

Date: 11/26/07

Start Time: 0930 AM / PM

End Time: 10 30 AM / PM

No. 2 Precarbon ESP

BOP	Roof Monitor		Gas Cleaners	
QBOP	Roof Monitor		Gas Cleaners	
Blast Furnace	4	6	8	14
Blast Furnace Top	4	6	8	14

The following events or operations contributed to significant emissions:

Time	Heat/Cast Number	Operation	Comments
Rel. Valve:	No Emissions		
Fce. Top	No Emissions		

20071107 Inspection Summary.doc

OCS Environmental, Inc.
Method 9 VE Inspection Form

Page 1 of 1

			Start	End
Date:	11-26-07	Emissions color:	As Noted	Same
Source:	4BF Top	Background:	Sky	
Observation Start Time:	0930	Sky Conditions:	Cloudy	
Observation End Time:	1030	Wind Speed:	5mph	
Observer's Position:	4BF-1	Wind Direction:	SE	
Distance to source:	320 Yd	Ambient Temp:	31°	
Direction to source:	NW	Relative Humidity%:	90%	
		Wet Bulb Temp:	–	
Height of source:	63'			
Vertical angle to source:	5°			

Plume Type: (Attached) Detached None

Comments	0	15	30	45			0	15	30	45	Comments
Rel. Valve	0	0	0	0	0	30	0	0	0	0	FCE Top
	0	0	0	0	1	31	0	0	0	0	
	0	0	0	0	2	32	0	0	0	0	
	0	0	0	0	3	33	0	0	0	0	
	0	0	0	0	4	34	0	0	0	0	
	0	0	0	0	5	35	0	0	0	0	
	0	0	0	0	6	36	0	0	0	0	
	0	0	0	0	7	37	0	0	0	0	
	0	0	0	0	8	38	0	0	0	0	
	0	0	0	0	9	39	0	0	0	0	
	0	0	0	0	10	40	0	0	0	0	
	0	0	0	0	11	41	0	0	0	0	
	0	0	0	0	12	42	0	0	0	0	
	0	0	0	0	13	43	0	0	0	0	
	0	0	0	0	14	44	0	0	0	0	
	0	0	0	0	15	45	0	0	0	0	
	0	0	0	0	16	46	0	0	0	0	
	0	0	0	0	17	47	0	0	0	0	
	0	0	0	0	18	48	0	0	0	0	
	0	0	0	0	19	49	0	0	0	0	
	0	0	0	0	20	50	0	0	0	0	
	0	0	0	0	21	51	0	0	0	0	
	0	0	0	0	22	52	0	0	0	0	
	0	0	0	0	23	53	0	0	0	0	
	0	0	0	0	24	54	0	0	0	0	
	0	0	0	0	25	55	0	0	0	0	
	0	0	0	0	26	56	0	0	0	0	
	0	0	0	0	27	57	0	0	0	0	
	0	0	0	0	28	58	0	0	0	0	
	0	0	0	0	29	59	0	0	0	0	

Additional Info (include steam dissipation point)

Observer's Signature: Robert Milsap

20071107 Method 9 Inspection Form.doc

OCS Environmental, Inc.
Method 9 Source Layout Sketch

Date: 11 12/6/07

Observer Name: R. MILSAP

Begin Time: 0930

Time End: 1030

No Sun Visible Times
09 30
1030

Observation Point

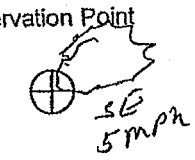

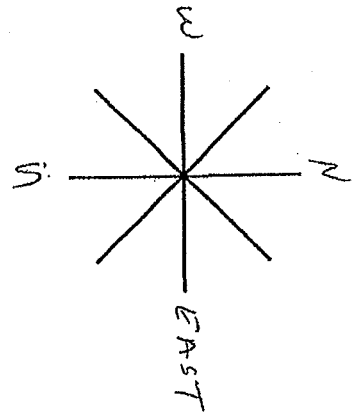

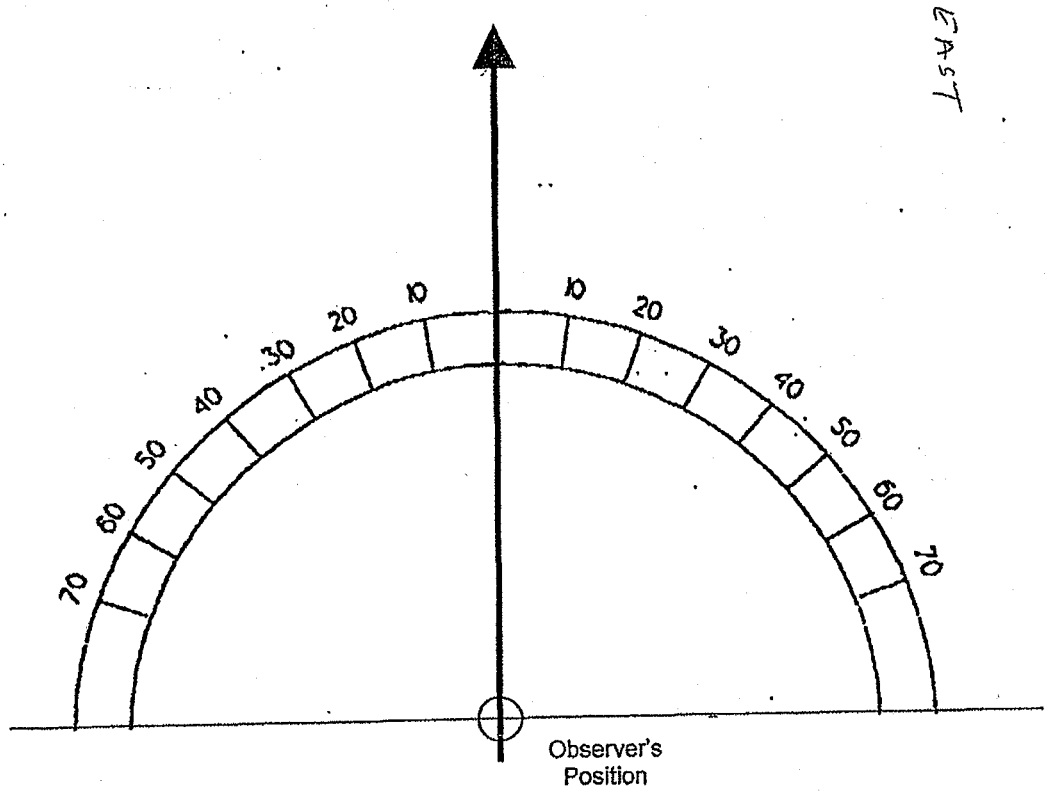

Signature: R. M Isop

20071107 Method 9 Source Layout Sketch.doc

6-17

OCS Environmental, Inc.

U.S. Steel Gary Works
Emissions Inspection Summary

Date: 11/9/07

Start Time: 1030 AM / PM

End Time: 1130 AM / PM

BOP	Roof Monitor		Gas Cleaners	
QBOP	Roof Monitor		Gas Cleaners	
Blast Furnace	4	6	8	14
Blast Furnace Top	4	6	8	14

The following events or operations contributed to significant emissions:

Time	Heat/Cast Number	Operation	Comments

20071107 Inspection Summary.doc

OCS Environmental, Inc.
Method 9 VE Inspection Form

Page 1 of 1

			Start	End
Date:	11/9/07	Emissions color:	As noted	Same
Source:	BF Top #8	Background:	sky	
Observation Start Time:	1030	Sky Conditions:	cloudy	
Observation End Time:	1130	Wind Speed:	4	
Observed Point:	8BF1	Wind Direction:	NW	
Distance to source:	320	Ambient Temp:	35	
Direction to source:	NW	Relative Humidity%:	89	
		Wet Bulb Temp:		
Height of source:	59			
Vertical angle to source:	3			

Plume Type: (Attached) Detached None

Comments	0	15	30	45			0	15	30	45	Comments
1030	0	0	0	0	0	30	0	0	0	0	1100
	0	0	0	0	1	31	0	0	0	0	
	0	0	0	0	2	32	0	0	0	0	
	0	0	0	0	3	33	0	0	0	0	
	0	0	0	0	4	34	0	0	0	0	
	0	0	0	0	5	35	0	0	0	0	
	0	0	0	0	6	36	0	0	0	0	
	0	0	0	0	7	37	0	0	0	0	
	0	0	0	0	8	38	0	0	0	0	
	0	0	0	0	9	39	0	0	0	0	
	0	0	0	0	10	40	0	0	0	0	
	0	0	0	0	11	41	0	0	0	0	
	0	0	0	0	12	42	0	0	0	0	
	0	0	0	0	13	43	0	0	0	0	
	0	0	0	0	14	44	0	0	0	0	
	0	0	0	0	15	45	0	0	0	0	
	0	0	0	0	16	46	0	0	0	0	
	0	0	0	0	17	47	0	0	0	0	
	0	0	0	0	18	48	0	0	0	0	
	0	0	0	0	19	49	0	0	0	0	
	0	0	0	0	20	50	0	0	0	0	
	0	0	0	0	21	51	0	0	0	0	
	0	0	0	0	22	52	0	0	0	0	
	0	0	0	0	23	53	0	0	0	0	
	0	0	0	0	24	54	0	0	0	0	
	0	0	0	0	25	55	0	0	0	0	
	0	0	0	0	26	56	0	0	0	0	
	0	0	0	0	27	57	0	0	0	0	
	0	0	0	0	28	58	0	0	0	0	
	0	0	0	0	29	59	0	0	0	0	

Additional info (include steam dissipation point)

Observer's Signature: Vonnie Patterson

20071107 Method 9 Inspection Form.doc

OCS Environmental, Inc.
Method 9 Source Layout Sketch

Date: 11 / 9 / 07

Observer Name: Varenne Patterson

Begin Time: 1030 Time End: 1130

No Sun Visible Times
1030
1100

Observation Point

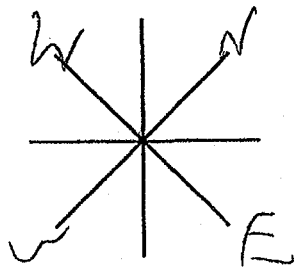

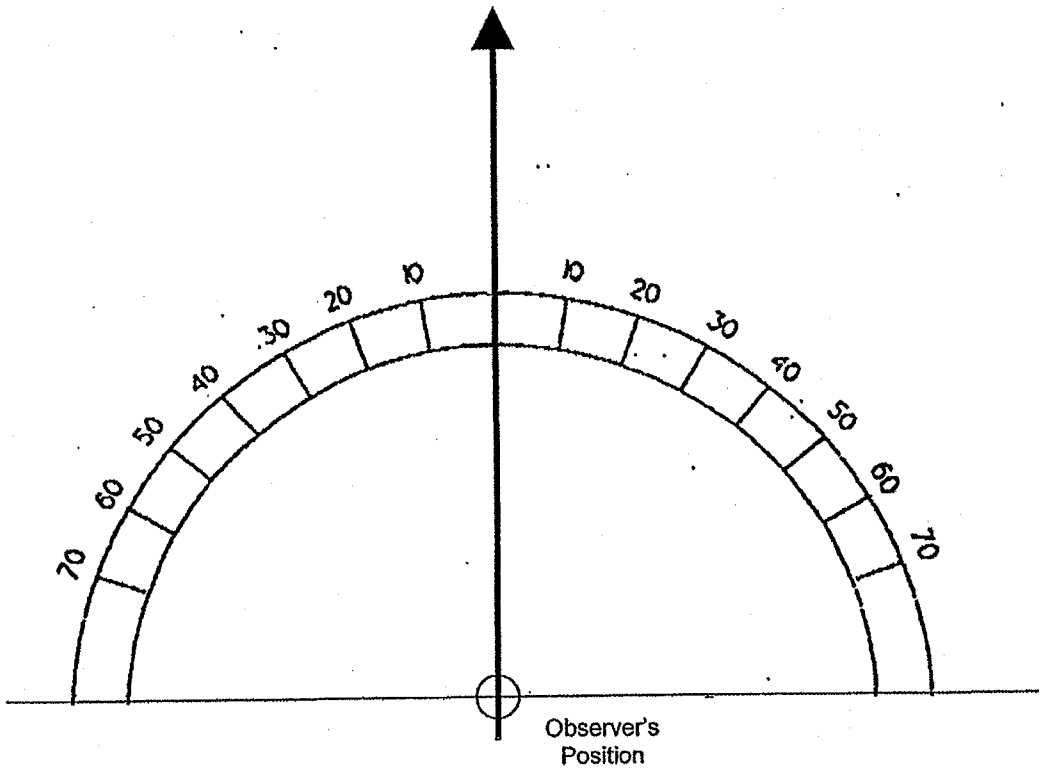

Signature: Varenne Patterson

20071107 Method 9 Source Layout Sketch.doc

C-18

OCS Environmental, Inc.

U.S. Steel Gary Works
Emissions Inspection Summary

Date: 12/4/07

Start Time: 1200 AM / PM

End Time: 1259 AM / PM

No. 2 Precarbon ESP

BOP	Roof Monitor		Gas Cleaners	
QBOP	Roof Monitor		Gas Cleaners	
Blast Furnace	4	6	8	14
Blast Furnace Top	4	6	8	14

The following events or operations contributed to significant emissions:

Time	Heat/Cast Number	Operation	Comments

20071107 Inspection Summary.doc

OCS Environmental, Inc.
Method 9 VE Inspection Form

Page 1 of 1

Date: 12-4-07
Source: 4BF Top
Observation Start Time: 1200
Observation End Time: 1259
Observer's Position: 4BF 1
Distance to source: 320 Yd
Direction to source: NW

Height of source: 63 Ft
Vertical angle to source: 5°

	Start	End
Emissions color:	As Noted	Same
Background:	Sky	↓
Sky Conditions:	Overcast	↓
Wind Speed:	5mph	↓
Wind Direction:	NE	↓
Ambient Temp:	30°	↓
Relative Humidity%:	70%	↓
Wet Bulb Temp:	N/A	

Plume Type: (Attached) Detached None

Comments	0	15	30	45			0	15	30	45	Comments
4BF Top	0	0	0	0	0	30	0	0	0	0	Rel value
	0	0	0	0	1	31	0	0	0	0	
	0	0	0	0	2	32	0	0	0	0	
	0	0	0	0	3	33	0	0	0	0	
	0	0	0	0	4	34	10	10	0	0	Black
	0	0	0	0	5	35	0	0	0	10	Black
	0	0	0	0	6	36	0	0	0	0	
	0	0	0	0	7	37	0	0	0	0	
	0	0	0	0	8	38	0	0	0	10	Black
	0	0	0	0	9	39	0	0	0	0	
	0	0	0	0	10	40	0	0	0	0	
	0	0	0	0	11	41	0	0	0	0	
	0	0	0	0	12	42	10	0	0	0	Black
	0	0	0	0	13	43	0	0	0	0	
	0	0	0	0	14	44	0	0	0	0	
	0	0	0	0	15	45	0	0	0	0	
	0	0	0	0	16	46	0	0	0	0	
	0	0	0	0	17	47	0	0	0	0	
	0	0	0	0	18	48	0	0	10	0	Black
	0	0	0	0	19	49	0	0	0	10	
	0	0	0	0	20	50	0	0	0	10	Black
	0	0	0	0	21	51	0	0	0	0	
	0	0	0	0	22	52	0	0	0	0	
	0	0	0	0	23	53	0	0	0	0	
	0	0	0	0	24	54	0	0	0	0	
	0	0	0	0	25	55	0	0	0	0	
	0	0	0	0	26	56	0	10	0	0	Black
	0	0	0	0	27	57	0	0	0	0	
	0	0	0	0	28	58	0	0	0	0	
	0	0	0	0	29	59	0	0	0	0	

Additional info (include steam dissipation point)

Observer's Signature: R. Milsap

20071107 Method 9 Inspection Form.doc

OCS Environmental, Inc.
Method 9 Source Layout Sketch

Date: 12 14 07

Observer Name: R. MILSAP

Begin Time: 1200 Time End: 1259

No Sun Visible Times
1200
1230

Observation Point

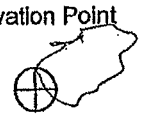

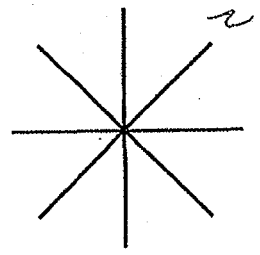

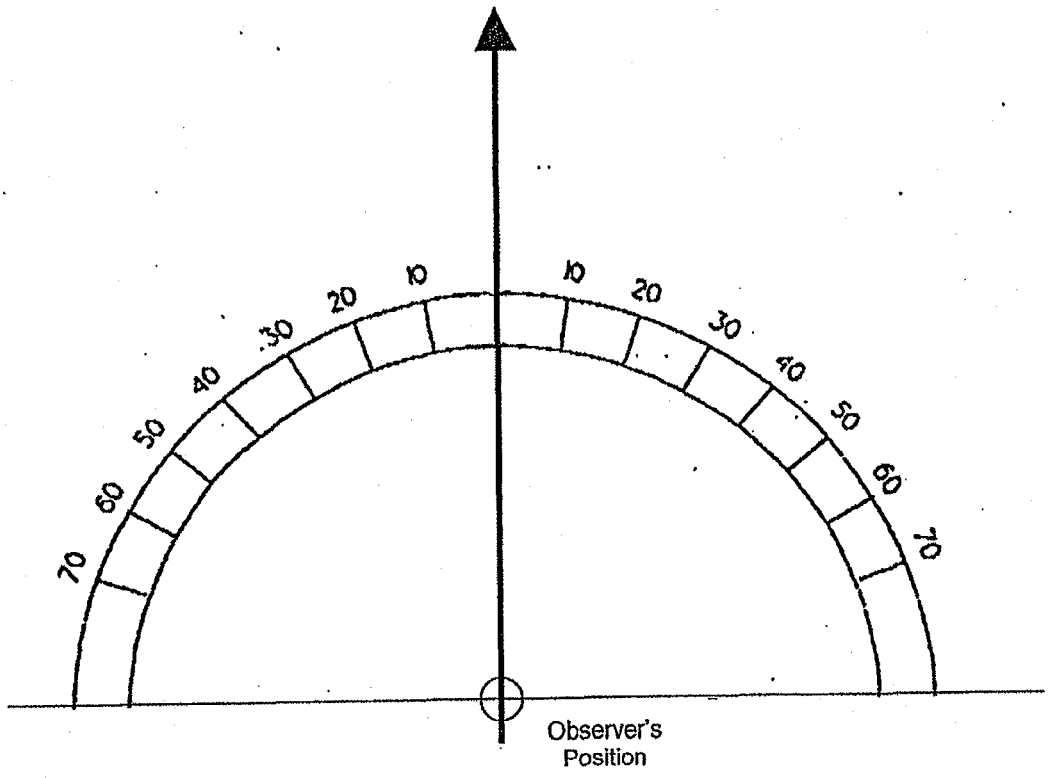

Signature: R. Milsap

20071107 Method 9 Source Layout Sketch.doc

6-45

OCS Environmental, Inc.

U.S. Steel Gary Works
Emissions Inspection Summary

Date: 11 1221 07

Start Time: 0700 00 (AM) / PM

End Time: 0759 45 AM / PM

No. 2 Precarbon ESP

BOP	Roof Monitor		Gas Cleaners	
QBOP	Roof Monitor		Gas Cleaners	
Blast Furnace	4	6	8	14
Blast Furnace Top	4	6	(8)	14

The following events or operations contributed to significant emissions:

Time	Heat/Cast Number	Operation	Comments

20071107 Inspection Summary.doc

OCS Environmental, Inc.
Method 9 VE Inspection Form

Page 1 of 1

			Start	End
Date:	11-22-07			
Source:	#9 BF	Emissions color:	AS NOTED	SAME
Observation Start Time:	0700 00	Background:	SKY	
Observation End Time:	0759 45	Sky Conditions:	OC	
Observer's Position:	8BF1	Wind Speed:	10-25	
Distance to source:	320	Wind Direction:	NW	
Direction to source:	NW	Ambient Temp:	34°	
		Relative Humidity%:	88%	
Height of source:	59	Wet Bulb Temp:		
Vertical angle to source:	3°			

Plume Type: Attached Detached None

Comments	0	15	30	45			0	15	30	45	Comments
	0	0	0	0	0	30	0	0	0	0	
	0	0	0	0	1	31	0	0	0	0	
	0	0	0	0	2	32	0	0	0	0	
	0	0	0	0	3	33	0	0	0	0	
	0	0	0	0	4	34	0	0	0	0	
	0	0	0	0	5	35	0	0	0	0	
	0	0	0	0	6	36	0	0	0	0	
	0	0	0	0	7	37	0	0	0	0	
	0	0	0	0	8	38	0	0	0	0	
	0	0	0	0	9	39	0	0	0	0	
	0	0	0	0	10	40	0	0	0	0	
	0	0	0	0	11	41	0	0	0	0	
	0	0	0	0	12	42	0	0	0	0	
	0	0	0	0	13	43	0	0	0	0	
	0	0	0	0	14	44	0	0	0	0	
	0	0	0	0	15	45	0	0	0	0	
	0	0	0	0	16	46	0	0	0	0	
	0	0	0	0	17	47	0	0	0	0	
	0	0	0	0	18	48	0	0	0	0	
	0	0	0	0	19	49	0	0	0	0	
	0	0	0	0	20	50	0	0	0	0	
	0	0	0	0	21	51	0	0	0	0	
	0	0	0	0	22	52	0	0	0	0	
	0	0	0	0	23	53	0	0	0	0	
	0	0	0	0	24	54	0	0	0	0	
	0	0	0	0	25	55	0	0	0	0	
	0	0	0	0	26	56	0	0	0	0	
	0	0	0	0	27	57	0	0	0	0	
	0	0	0	0	28	58	0	0	0	0	
	0	0	0	0	29	59	0	0	0	0	

Additional info (include steam dissipation point)

Observer's Signature: J. Johnson

20071107 Method 9 Inspection Form.doc

OCS Environmental, Inc.
Method 9 Source Layout Sketch

Date: 11/22/07

Observer Name: J. Johnson

Begin Time: 0700 00

Time End: 0759 45

No Sun Visible Times

0700 00

0730 06

Observation Point

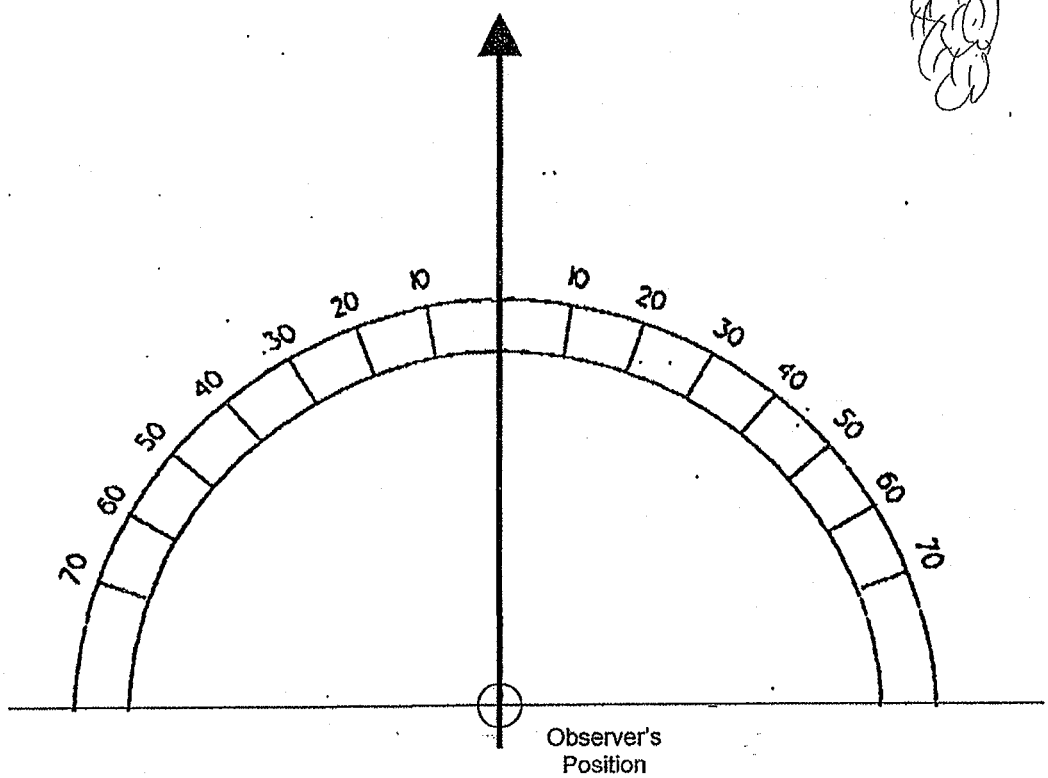

Signature: J. Johnson

20071107 Method 9 Source Layout Sketch.doc

6-20

OCS Environmental, Inc.

U.S. Steel Gary Works
Emissions Inspection Summary

Date: 12/6/07

Start Time: 11:00 AM / PM

End Time: 11:59 AM / PM

No. 2 Precarbon ESP

BOP	Roof Monitor		Gas Cleaners	
QBOP	Roof Monitor		Gas Cleaners	
Blast Furnace	4	6	8	14
Blast Furnace Top	4	6	8	14

The following events or operations contributed to significant emissions:

Time	Heat/Cast Number	Operation	Comments

20071107 Inspection Summary.doc

OCS Environmental, Inc.
Method 9 VE Inspection Form

Page 1 of 1

			Start	End
Date:	12-6-07	Emissions color:	AS NOTED	SAME
Source:	#8 BFG	Background:	SKY	
Observation Start Time:	11:00	Sky Conditions:	CLEAR	
Observation End Time:	11:59	Wind Speed:	2	
Observer's Position:	8BF2	Wind Direction:	SW	
Distance to source:	350 YDS	Ambient Temp:	8°	
Direction to source:	W 310°	Relative Humidity%:	100	
Height of source:	59'	Wet Bulb Temp:		
Vertical angle to source:	6°			

Plume Type: Attached Detached None

Comments	0	15	30	45			0	15	30	45	Comments
	0	0	0	0	0	30	0	0	0	0	
	0	0	0	0	1	31	0	10	10	5	GRAY
	0	0	0	0	2	32	0	0	0	0	
	0	0	0	0	3	33	0	0	0	0	
	0	0	0	0	4	34	0	0	0	0	
	0	0	0	0	5	35	0	0	0	0	
	0	0	0	0	6	36	0	0	0	0	
	0	0	0	0	7	37	0	0	0	0	
	0	0	0	0	8	38	0	0	0	0	
	0	0	0	0	9	39	0	0	0	0	
	0	0	0	0	10	40	0	0	0	0	
	0	0	0	0	11	41	0	0	0	0	
	0	0	0	0	12	42	0	0	0	0	
	0	0	0	0	13	43	0	0	0	0	
	0	0	0	0	14	44	0	0	0	0	
	0	0	0	0	15	45	0	0	0	0	
	0	0	0	0	16	46	0	0	0	0	
	0	0	0	0	17	47	0	0	0	0	
	0	0	0	0	18	48	0	0	0	0	
	0	0	0	0	19	49	0	0	0	0	
	0	0	0	0	20	50	0	0	0	0	
	0	0	0	0	21	51	0	0	0	0	
	0	0	0	0	22	52	0	0	0	0	
	0	0	0	0	23	53	0	0	0	0	
	0	0	0	0	24	54	0	0	0	0	
	0	0	0	0	25	55	0	0	0	0	
	0	0	0	0	26	56	0	0	0	0	
	0	0	0	0	27	57	0	0	0	0	
	0	0	0	0	28	58	0	0	0	0	
	0	0	0	0	29	59					

Additional info (include steam dissipation point)

Observer's Signature: Chet Dulin

20071107 Method 9 Inspection Form.doc

OCS Environmental, Inc.
Method 9 Source Layout Sketch

Date: 12/06/07

Observer Name: Chet Dulin

Begin Time: 11:00 Time End: 11:59

No Sun Visible Times

Observation Point

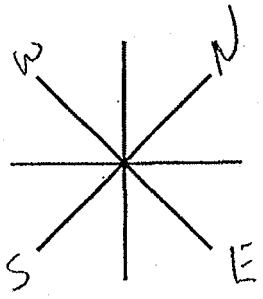

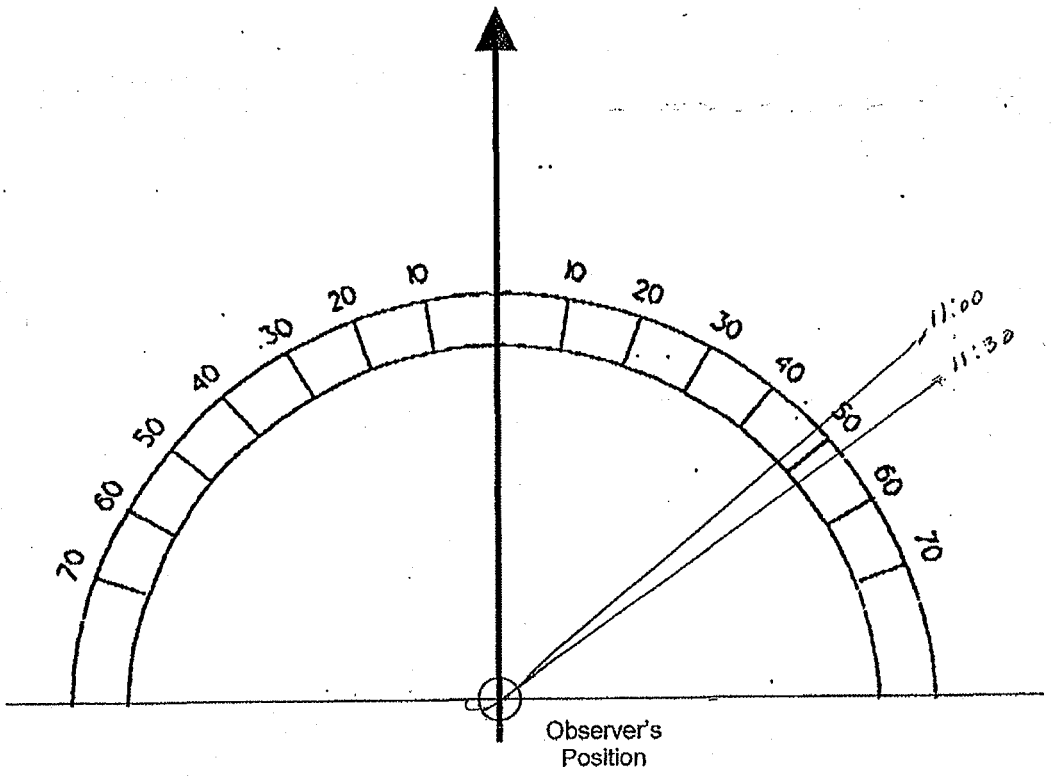

Signature: Chet Dulin

20071107 Method 9 Source Layout Sketch.doc

8-1

OCS Environmental, Inc.

U.S. Steel Gary Works
Emissions Inspection Summary

Date: 11/19/07

Start Time: 09:59 AM / PM

End Time: 14:45 AM / PM

No. 2 Precarbon ESP

BOP	Roof Monitor		Gas Cleaners (NORTH)	
QBOP	Roof Monitor		Gas Cleaners	
Blast Furnace	4	6	8	14
Blast Furnace Top	4	6	8	14

The following events or operations contributed to significant emissions:

Time	Heat/Cast Number	Operation	Comments

20071107 Inspection Summary.doc

OCS Environmental, Inc.
Method 9 VE Inspection Form

			Start	End
Date:	11-19-07			
Source:	1BOP GCS (North	Emissions color:	As Noted	Same
Observation Start Time:	09:59	Background:	Sky	
Observation End Time:	09:59	Sky Conditions:	Overcast	
Observer's Position:	SE4	Wind Speed:	10 mph	
Distance to source:	360 yds	Wind Direction:	So.	
Direction to source:	NE	Ambient Temp:	40°	
	40°	Relative Humidity%:	93%	
Height of source:	157'	Wet Bulb Temp:	N/A	
Vertical angle to source:	9°			

Plume Type: Attached Detached None

Comments	0	15	30	45			0	15	30	45	Comments
					0	30					
					1	31					
					2	32					
					3	33					
					4	34					
					5	35					
					6	36					
					7	37					
					8	38					
					9	39					
					10	40					
					11	41					
					12	42					
					13	43					
					14	44					
					15	45					
					16	46					
					17	47					
					18	48					
					19	49					
					20	50					
					21	51					
					22	52					
					23	53					
					24	54					
					25	55					
					26	56					
					27	57					
					28	58					
					29	59	0	0	0	0	SMC-M 48132

Additional info (include steam dissipation point)

Observer's Signature

20071107 Method 9 Inspection Form.doc

OCS Environmental, Inc.
Method 9 VE Inspection Form

			Start	End
Date:	11-19-07			
Source:	1 BOP GCS (NORTH)	Emissions color:	AS NOTED	SAME
Observation Start Time:	10:00	Background:	SKY	
Observation End Time:	10:59	Sky Conditions:	OVERCAST	
Observer's Position:	SPY	Wind Speed:	10 MPH	
Distance to source:	360 YDS	Wind Direction:	SO.	
Direction to source:	NE 40°	Ambient Temp:	40	
		Relative Humidity%:	93 %	
Height of source:	157'	Wet Bulb Temp:	N/A	
Vertical angle to source:	9°			

Plume Type: (Attached) Detached None

Comments	0	15	30	45			0	15	30	45	Comments
	0	0	0	0	0	30	0	0	0	0	
	0	0	0	0	1	31	0	0	0	0	
	0	0	0	0	2	32	0	0	0	0	
HMC – M Comp.	0	0	0	0	3	33	0	0	0	0	TD – M
	0	0	0	0	4	34	0	0	0	0	
	0	0	0	0	5	35	0	0	0	0	
	0	0	0	0	6	36	0	0	0	0	
	0	0	0	0	7	37	0	0	0	0	
	0	0	0	0	8	38	0	0	0	0	
	0	0	0	0	9	39	0	0	0	0	TAP – M
	0	0	0	0	10	40	0	0	0	0	
	0	0	0	0	11	41	0	0	0	0	
	0	0	0	0	12	42	0	0	0	0	
BLOW – M	0	0	0	0	13	43	0	0	0	0	
	0	0	0	0	14	44	0	0	0	0	
	0	0	0	0	15	45	0	0	0	0	
	0	0	0	0	16	46	0	0	0	0	TD – D
	0	0	0	0	17	47	0	0	0	0	
	0	0	0	0	18	48	0	0	0	0	
	0	0	0	0	19	49	0	0	0	0	
	0	0	0	0	20	50	0	0	0	0	
HMC D	0	0	0	0	21	51	0	0	0	0	
	0	0	0	0	22	52	0	0	0	0	
HMC COMPLETED	0	0	0	0	23	53	0	0	0	0	
	0	0	0	0	24	54	0	0	0	0	
	0	0	0	0	25	55	0	0	0	0	
BLOW DN D	0	0	0	0	26	56	0	0	0	0	SMC – M48133
	0	0	0	0	27	57	0	0	0	0	
	0	0	0	0	28	58	0	0	0	0	HMC – M
	0	0	0	0	29	59	0	0	0	0	TAP – D

Additional info (include steam dissipation point)

Observer's Signature

OCS Environmental, Inc.
Method 9 VE Inspection Form

Date:	11-19-07
Source:	LBOP ECB
Observation Start Time:	11:00
Observation End Time:	11:45
Observer's Position:	SPH
Distance to source:	360 YDS
Direction to source:	NE 40°
Height of source:	157'
Vertical angle to source:	9°

	Start	End
Emissions color:	AS NOTED	SAME
Background:	SKY	
Sky Conditions:	OVERCAST	
Wind Speed:	10 MPH	
Wind Direction:	SW	
Ambient Temp:	40°	
Relative Humidity%:	93%	
Wet Bulb Temp:	N/A	

Plume Type: Attached Detached None

Comments	0	15	30	45			0	15	30	45	Comments
	0	0	0	0	0	30	0	0	0	0	
HMC-M COMP.	0	0	0	0	1	31	0	0	0	0	
	0	0	0	0	2	32	0	0	0	0	
	0	0	0	0	3	33	0	0	0	0	
	0	0	0	0	4	34	0	0	0	0	
	0	0	0	0	5	35	0	0	0	0	
	0	0	0	0	6	36	0	0	0	0	
	0	0	0	0	7	37	0	0	0	0	TAP-M
	0	0	0	0	8	38	0	0	0	0	
	0	0	0	0	9	39	0	0	0	0	
	0	0	0	0	10	40	0	0	0	0	
	0	0	0	0	11	41	0	0	0	0	
	0	0	0	0	12	42	0	0	0	0	
	0	0	0	0	13	43	0	0	0	0	
	0	0	0	0	14	44	0	0	0	0	
	0	0	0	0	15	45	0	0	0	0	
	0	0	0	0	16	46					END OBSERVATION
	0	0	0	0	17	47					
	0	0	0	0	18	48					
	0	0	0	0	19	49					
	0	0	0	0	20	50					
	0	0	0	0	21	51					
	0	0	0	0	22	52					
	0	0	0	0	23	53					
	0	0	0	0	24	54					
	0	0	0	0	25	55					
TD-M	0	0	0	0	26	56					
	0	0	0	0	27	57					
	0	0	0	0	28	58					
	0	0	0	0	29	59					

Additional info (include steam dissipation point)

Observer's Signature

20071107 Method 9 Inspection Form.doc

OCS Environmental, Inc.
Method 9 Source Layout Sketch

Date: 11/19/07

Observer Name: Chet David

Begin Time: 09:59 Time End: 11:45

No Sun Visible Times
09:59
10:00
10:30
10:45

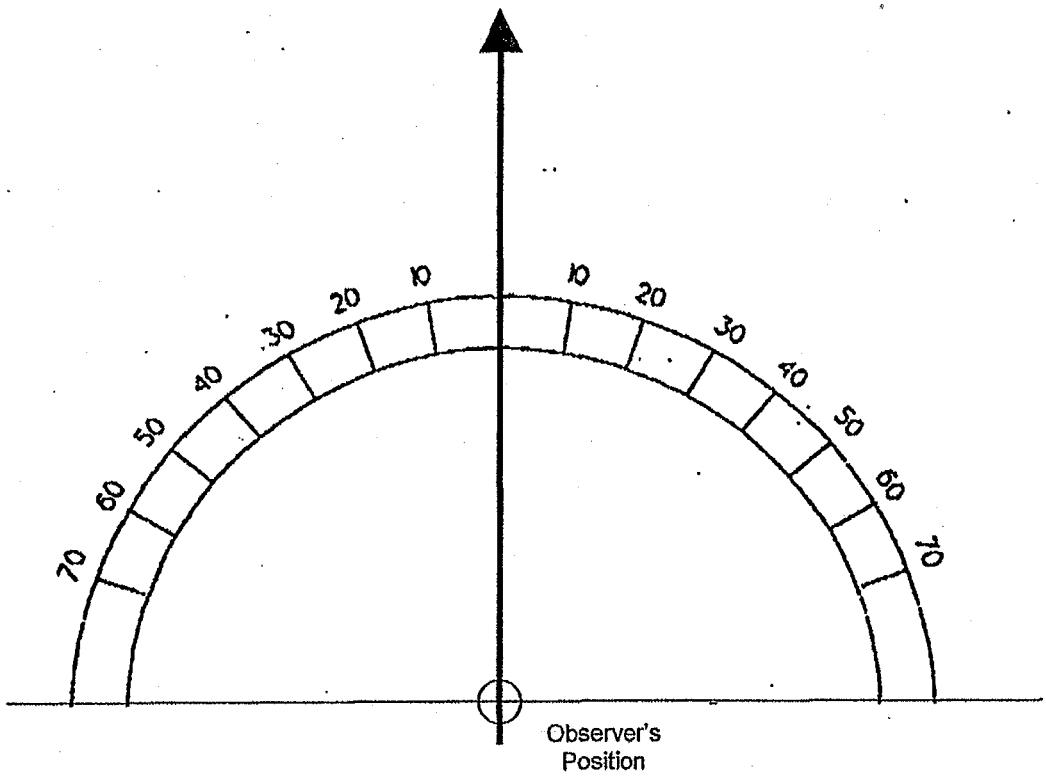

Signature: _____

20071107 Method 9 Source Layout Sketch.doc

OCS Environmental, Inc.

U.S. Steel Gary Works
Emissions Inspection Summary

Date: 11/19/07

Start Time: 09:45 AM / PM South Stack

End Time: 09:58 AM / PM

No. 2 Precarbon ESP

BOP	Roof Monitor		Gas Cleaners	
QBOP	Roof Monitor		Gas Cleaners	
Blast Furnace	4	6	8	14
Blast Furnace Top	4	6	8	14

The following events or operations contributed to significant emissions:

Time	Heat/Cast Number	Operation	Comments

20071107 Inspection Summary.doc

OCS Environmental, Inc.
Method 9 VE Inspection Form

Page 1 of 1

			Start	End
Date:	11-19-07			
Source:	1BOP GCS (SOUTH)	Emissions color:	AS NOTED	SAME
Observation Start Time:	09:45	Background:	SKY	
Observation End Time:	09:59	Sky Conditions:	OVERCAST	
Observer's Position:	SP4	Wind Speed:	10 MPH	
Distance to source:	360 YDS	Wind Direction:	SO.	
Direction to source:	NE	Ambient Temp:	40°	
	40°	Relative Humidity%:	93%	
Height of source:	157'	Wet Bulb Temp:	N/A	
Vertical angle to source:	9°			

Plume Type: Attached Detached None

Comments	0	15	30	45			0	15	30	45	Comments
					0	30					
					1	31					
					2	32					
					3	33					
					4	34					
					5	35					
					6	36					
					7	37					
					8	38					
					9	39					
					10	40					
					11	41					
					12	42					
					13	43					
					14	44					
					15	45	0	0	0	0	D44391 Blowin Plume
					16	46	0	0	0	0	
					17	47	0	0	0	0	
					18	48	0	0	0	0	
					19	49	0	0	0	0	TD-D
					20	50	0	0	0	0	
					21	51	0	0	0	0	
					22	52	0	0	0	0	
					23	53	0	0	0	0	
					24	54	0	0	0	0	
					25	55	0	0	0	0	
					26	56	0	0	0	0	
					27	57	0	0	0	0	
					28	58	0	0	0	0	END So. STACK
					29	59	—	—	—	—	

Additional info (include steam dissipation point)

M48132

Observer's Signature

20071107 Method 9 Inspection Form.doc

OCS Environmental, Inc.
Method 9 Source Layout Sketch

Date: 11/19/07 SOUTH STACK

Observer Name: Chet Dulin

Begin Time: 09:45 Time End: 0958

No Sun Visible Times
09:45

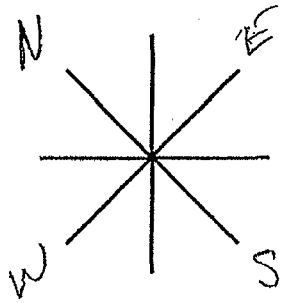

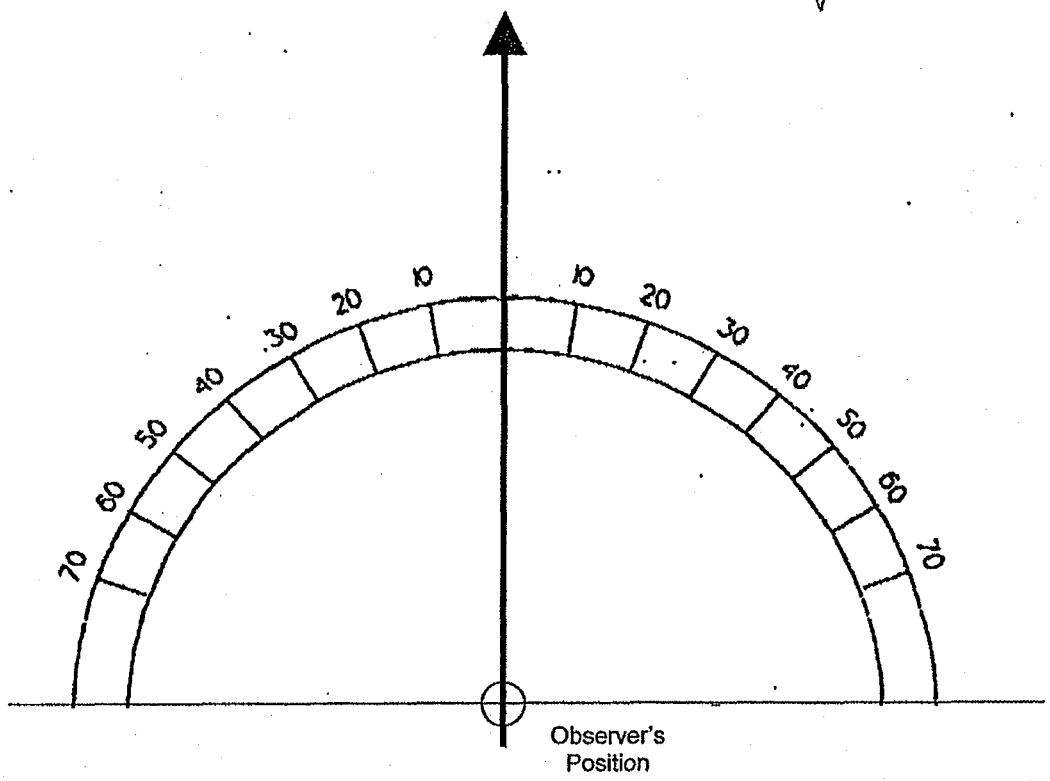

Signature: Chet Dulin

20071107 Method 9 Source Layout Sketch.doc

8-2

OCS Environmental, Inc.

U.S. Steel Gary Works
Emissions Inspection Summary

Date: 11/27/07

Start Time: 0645 (AM) / PM

End Time: 0911 (AM) / PM

No. 2 Precarbon ESP

(BOP)	Roof Monitor		(Gas Cleaners) South STACK	
QBOP	Roof Monitor		Gas Cleaners	
Blast Furnace	4	6	8	14
Blast Furnace Top	4	6	8	14

The following events or operations contributed to significant emissions:

Time	Heat/Cast Number	Operation	Comments
South STACK: Lite	Emissions	Observed	

20071107 Inspection Summary.doc

OCS Environmental, Inc.
Method 9 VE Inspection Form

			Start	End
Date:	11-27-07			
Source:	#1 Bkp South STACK	Emissions color:	As Noted	Same
Observation Start Time:	0645	Background:	Sky	↓
Observation End Time:	0659	Sky Conditions:	Pt Sunny	↓
Observer's Position:	SE4	Wind Speed:	8	↓
Distance to source:	360 yds	Wind Direction:	SW	↓
Direction to source:	NE 40°	Ambient Temp:	29°	↓
	Mag North	Relative Humidity%:	89	↓
Height of source:	157'	Wet Bulb Temp:	—	↓
Vertical angle to source:	9°			

Plume Type: Attached Detached None

Comments	0	15	30	45			0	15	30	45	Comments
					0	30					
					1	31					
					2	32					
					3	33					
					4	34					
					5	35					
					6	36					
					7	37					
					8	38					
					9	39					
					10	40					
					11	41					
					12	42					
					13	43					
					14	44					
					15	45	0	0	0	0	South STACK
					16	46	0	0	0	0	
					17	47	0	0	0	0	
					18	48	0	0	0	0	
					19	49	0	0	0	0	
					20	50	0	0	0	0	Scrap change
					21	51	0	0	0	0	D-44481
					22	52	0	0	0	0	
					23	53	0	0	0	0	
					24	54	0	0	0	0	
					25	55	0	0	0	0	
					26	56	0	0	0	0	
					27	57	0	0	0	0	
					28	58	0	0	0	0	
					29	59	0	0	0	0	

Additional info (include steam dissipation point)

Observer's Signature: Kevin Davis

OCS Environmental, Inc.
Method 9 VE Inspection Form

			Start	End
Date:	11-27-07			
Source:	#1 Bop South STACK	Emissions color:	As Noted	Same
Observation Start Time:	0700	Background:	Sky	
Observation End Time:	0759	Sky Conditions:	Pt. Sunny	
Observer's Position:	SE4	Wind Speed:	8	
Distance to source:	360yds	Wind Direction:	SW	
Direction to source:	NE 48°	Ambient Temp:	29°	
	MAG North	Relative Humidity%:	89	
Height of source:	151'	Wet Bulb Temp:	–	
Vertical angle to source:	9°			

Plume Type: (Attached) Detached None

Comments	0	15	30	45			0	15	30	45	Comments
South STACK	0	0	0	0	0	30	0	0	0	0	South STACK
	0	0	0	0	1	31	0	0	0	0	
	0	0	0	0	2	32	0	0	0	0	
	0	0	0	0	3	33	0	0	0	0	
	0	0	0	0	4	34	0	0	0	0	
	0	0	0	0	5	35	0	0	0	0	
	0	0	0	0	6	36	0	0	0	0	
	0	0	0	0	7	37	0	0	0	0	
	0	0	0	0	8	38	0	0	0	0	
	0	0	0	0	9	39	0	0	0	0	
	0	0	0	0	10	40	0	0	0	0	TD - D
	0	0	0	0	11	41	0	0	0	0	
	0	0	0	0	12	42	0	0	0	0	
	0	0	0	0	13	43	0	0	0	0	
	0	0	0	0	14	44	0	0	0	0	
	0	0	0	0	15	45	0	0	0	0	
HMC - D	0	0	0	0	16	46	0	0	0	0	
Brown	0	0	20	30	17	47	0	0	0	0	
HMC " Complete	20	25	20	20	18	48	0	0	0	0	TD - D
Blow " D	15	10	5	0	19	49	0	0	0	0	
	0	0	0	0	20	50	0	0	0	0	
	0	0	0	0	21	51	0	0	0	0	
	0	0	0	0	22	52	0	0	0	0	
	0	0	0	0	23	53	0	0	0	0	
	0	0	0	0	24	54	0	0	0	0	
	0	0	0	0	25	55	0	0	0	0	
	0	0	0	0	26	56	0	0	0	0	Top D
	0	0	0	0	27	57	0	0	0	0	
	0	0	0	0	28	58	0	0	0	0	
	0	0	0	0	29	59	0	0	0	0	

Additional Info (include steam dissipation point)

Observer's Signature: Kevin Davis

OCS Environmental, Inc.
Method 9 VE Inspection Form

			Start	End
Date:	11-27-07			
Source:	#1 Bop South STACK	Emissions color:	As Noted	Same
Observation Start Time:	0800	Background:	Sky	
Observation End Time:	0859	Sky Conditions:	Pt. Sunny	
Observer's Position:	SE4	Wind Speed:	8	
Distance to source:	360yds	Wind Direction:	SW	
Direction to source:	NE 40°	Ambient Temp:	29°	
	Mag North	Relative Humidity%:	89	
Height of source:	151'	Wet Bulb Temp:	–	
Vertical angle to source:	9°			

Plume Type: Attached Detached None

Comments	0	15	30	45			0	15	30	45	Comments
South STACK	0	0	0	0	0	30	0	0	0	0	
	0	0	0	0	1	31	0	0	0	0	
	0	0	0	0	2	32	0	0	0	0	
	0	0	0	0	3	33	0	0	0	0	
	0	0	0	0	4	34	0	0	0	0	HMC - D
	0	0	0	0	5	35	20	15	20	15	Brown
	0	0	0	0	6	36	10	5	5	5	HMC - Complete
	0	0	0	0	7	37	0	0	0	0	
	0	0	0	0	8	38	0	0	0	0	Blow D
	0	0	0	0	9	39	0	0	0	0	
Scrap D 44482	0	0	0	0	10	40	0	0	0	0	
	0	0	0	0	11	41	0	0	0	0	
	0	0	0	0	12	42	0	0	0	0	
	0	0	0	0	13	43	0	0	0	0	
	0	0	0	0	14	44	0	0	0	0	
	0	0	0	0	15	45	0	0	0	0	
	0	0	0	0	16	46	0	0	0	0	
	0	0	0	0	17	47	0	0	0	0	
	0	0	0	0	18	48	0	0	0	0	
	0	0	0	0	19	49	0	0	0	0	
	0	0	0	0	20	50	0	0	0	0	
	0	0	0	0	21	51	0	0	0	0	
	0	0	0	0	22	52	0	0	0	0	
	0	0	0	0	23	53	0	0	0	0	
	0	0	0	0	24	54	0	0	0	0	
	0	0	0	0	25	55	0	0	0	0	
	0	0	0	0	26	56	0	0	0	0	
	0	0	0	0	27	57	0	0	0	0	
	0	0	0	0	28	58	0	0	0	0	
	0	0	0	0	29	59	0	0	0	0	

Additional info (include steam dissipation point)

Observer's Signature: Kevin Davis

20071107 Method 9 Inspection Form.doc

OCS Environmental, Inc.
Method 9 VE Inspection Form

			Start	End
Date:	11-27-07			
Source:	#1 Bop South STACK	Emissions color:	As Noted	Same
Observation Start Time:	0900	Background:	Sky	
Observation End Time:	0911	Sky Conditions:	Pt Sunny	
Observer's Position:	SE 4	Wind Speed:	8	
Distance to source:	360 yds	Wind Direction:	SW	
Direction to source:	NE 40° Mag North	Ambient Temp:	29°	
		Relative Humidity%:	89	
Height of source:	157'	Wet Bulb Temp:	-	
Vertical angle to source:	9°			

Plume Type: Attached Detached None

Comments	0	15	30	45			0	15	30	45	Comments
South STACK	0	0	0	0	0	30					
Turn Down-D	0	0	0	0	1	31					
	0	0	0	0	2	32					
	0	0	0	0	3	33					
	0	0	0	0	4	34					
	0	0	0	0	5	35					
	0	0	0	0	6	36					
	0	0	0	0	7	37					
	0	0	0	0	8	38					
TAP-D	0	0	0	0	9	39					
	0	0	0	0	10	40					
END	0	0	0	0	11	41					
					12	42					
					13	43					
					14	44					
					15	45					
					16	46					
					17	47					
					18	48					
					19	49					
					20	50					
					21	51					
					22	52					
					23	53					
					24	54					
					25	55					
					26	56					
					27	57					
					28	58					
					29	59					

Additional info (include steam dissipation point)

Observer's Signature: Kevin Davis

OCS Environmental, Inc.
Method 9 Source Layout Sketch

Date: 11/27/07

Observer Name: K. Davis

Begin Time: 0645

Time End: 0911

No Sun Visible Times
0645
0715

Observation Point

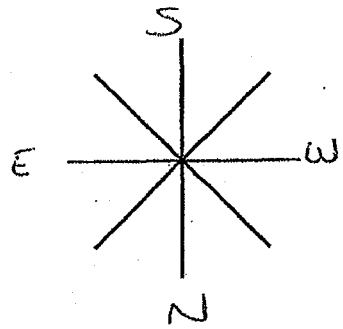

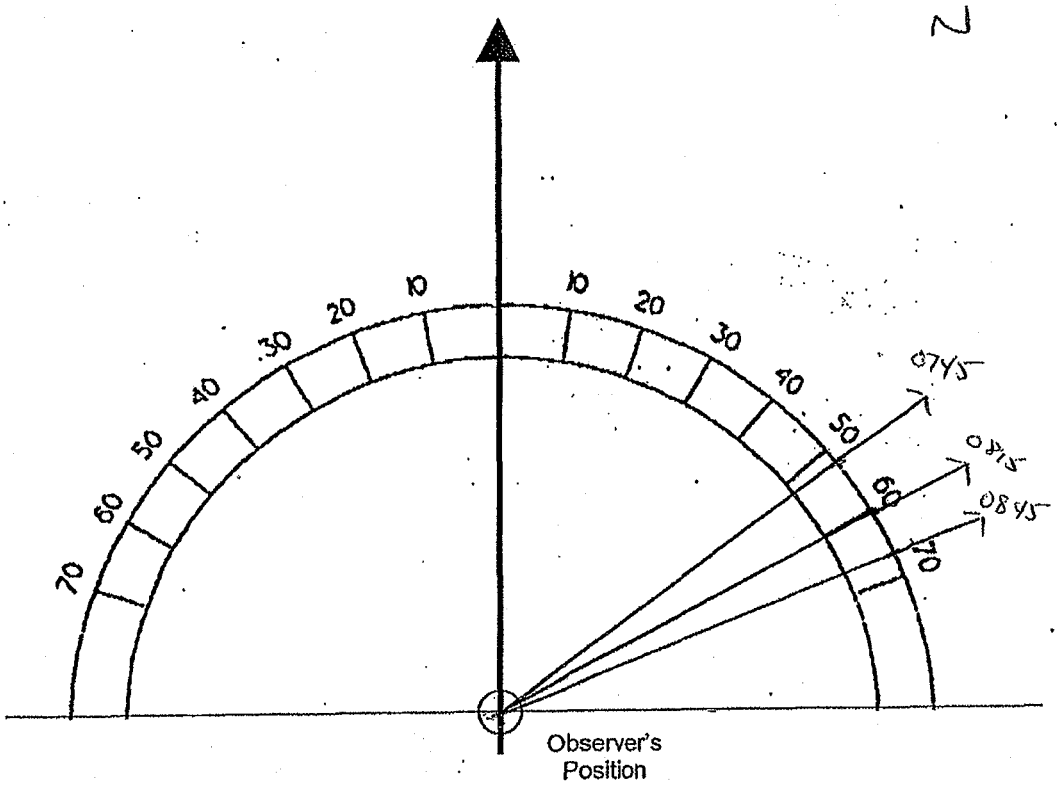

Signature: Kevin Davis

20071107 Method 9 Source Layout Sketch.doc

9-3

OCS Environmental, Inc.

U.S. Steel Gary Works
Emissions Inspection Summary

Date: 11/20/07

Start Time: 06:45 AM / PM

End Time: 08:57 AM / PM

No. 2 Precarbon ESP

BOP	Roof Monitor		Gas Cleaners (South)	
QBOP	Roof Monitor		Gas Cleaners	
Blast Furnace	4	6	8	14
Blast Furnace Top	4	6	8	14

The following events or operations contributed to significant emissions:

Time	Heat/Cast Number	Operation	Comments

20071107 Inspection Summary.doc

OCS Environmental, Inc.
Method 9 VE Inspection Form

			Start	End
Date:	11-20-07			
Source:	1BOP CCS (South)	Emissions color:	AS NOTED	SAME
Observation Start Time:	06:45	Background:	SKY	
Observation End Time:	06:59	Sky Conditions:	OVERCAST	
Observer's Position:	SP4	Wind Speed:	7	
Distance to source:	360 YDS	Wind Direction:	NE	
Direction to source:	NE 40°	Ambient Temp:	49°	
		Relative Humidity%:	88%	
Height of source:	157'	Wet Bulb Temp:	N/A	
Vertical angle to source:	9°			

Plume Type: Attached Detached None

Comments	0	15	30	45			0	15	30	45	Comments
					0	30					
					1	31					
					2	32					
					3	33					
					4	34					
					5	35					
					6	36					
					7	37					
					8	38					
					9	39					
					10	40					
					11	41					
					12	42					
					13	43					
					14	44					
					15	45	0	0	0	0	Re Blow D44405
					16	46	0	0	0	0	
					17	47	0	0	0	0	
					18	48	0	0	0	0	
					19	49	0	0	0	0	
					20	50	0	0	0	0	
					21	51	0	0	0	0	
					22	52	0	0	0	0	
					23	53	0	0	0	0	
					24	54	0	0	0	0	
					25	55	0	0	0	0	
					26	56	0	0	0	0	
					27	57	0	0	0	0	
					28	58	0	0	0	0	TAP - M
					29	59	0	0	0	0	

Additional info (include steam dissipation point)

Observer's Signature

C45 Reblow D44405

M48151 Blow in Progress 6:45 E45691

20071107 Method 9 Inspection Form.doc

OCS Environmental, Inc.
Method 9 VE Inspection Form

			Start	End
Date:	11-20-07			
Source:	1BOP GCS (SOUTH)	Emissions color:	AS NOTED	SAME
Observation Start Time:	07:00	Background:	SKY	↓
Observation End Time:	07:59	Sky Conditions:	OVERCAST	↓
Observer's Position:	SP4	Wind Speed:	7MPH	↓
Distance to source:	360 YDS	Wind Direction:	NE	↓
Direction to source:	NE	Ambient Temp:	49°	↓
	40°	Relative Humidity%:	88%	↓
Height of source:	157'	Wet Bulb Temp:	N/A	
Vertical angle to source:	0°			

Plume Type: Attached Detached None

Comments	0	15	30	45			0	15	30	45	Comments
	0	0	0	0	0	30	0	0	0	0	SMC-E 45691
	0	0	0	0	1	31	0	0	0	0	
	0	0	0	0	2	32	0	0	0	0	
	0	0	0	0	3	33	0	0	0	0	
	0	0	0	0	4	34	0	0	0	0	
	0	0	0	0	5	35	0	0	0	0	
	0	0	0	0	6	36	0	0	0	0	
	0	0	0	0	7	37	0	0	0	0	
	0	0	0	0	8	38	0	0	0	0	
	0	0	0	0	9	39	0	0	0	0	
	0	0	0	0	10	40	0	0	0	0	
	0	0	0	0	11	41	0	0	0	0	TD-D
	0	0	0	0	12	42	0	0	0	0	
	0	0	0	0	13	43	0	0	0	0	
	0	0	0	0	14	44	0	0	0	0	HMC-E
	0	0	0	0	15	45	0	0	0	0	
	0	0	0	0	16	46	0	0	0	0	
HMC-D 44466	0	0	0	0	17	47	0	0	0	0	HMC-COMPLETE E
	0	0	0	0	18	48	0	0	0	0	BLOW-E
	0	0	0	0	19	49	0	0	0	0	
HMC-COMPLETE	0	0	0	0	20	50	0	0	0	0	TAP-D
	0	0	0	0	21	51	0	0	0	0	
BLOW-D	0	0	0	0	22	52	0	0	0	0	
	0	0	0	0	23	53	0	0	0	0	
	0	0	0	0	24	54	0	0	0	0	
	0	0	0	0	25	55	0	0	0	0	
BROWN	0	0	0	10	26	56	0	0	0	0	
"	10	10	10	10	27	57	0	0	0	0	
"	10	10	10	0	28	58	0	0	0	0	
	0	0	0	0	29	59	0	0	0	0	

Additional info (include steam dissipation point)

Observer's Signature: Chet Dulin

OCS Environmental, Inc.
Method 9 VE Inspection Form

			Start	End
Date:	11-20-07	Emissions color:	AS NOTED	SAME
Source:	1 BOP GCS (SOUTH)	Background:	SKY	
Observation Start Time:	08:00	Sky Conditions:	OVERCAST	
Observation End Time:	08:57	Wind Speed:	7 MPH	
Observer's Position:	SP4	Wind Direction:	NE	
Distance to source:	360 YDS	Ambient Temp:	49°	
Direction to source:	NE	Relative Humidity%:	88%	
	40°	Wet Bulb Temp:	N/A	
Height of source:	157'			
Vertical angle to source:	9°			

Plume Type: Attached Detached None

Comments	0	15	30	45			0	15	30	45	Comments
	0	0	0	0	0	30	0	0	0	0	HMC COMPLETE D
	0	0	0	0	1	31	0	0	0	0	BLOW-D
	0	0	0	0	2	32	0	0	0	0	
	0	0	0	0	3	33	0	0	0	0	
	0	0	0	0	4	34	0	0	0	0	
	0	0	0	0	5	35	0	0	0	0	
	0	0	0	0	6	36	0	0	0	0	
	0	0	0	0	7	37	0	0	0	0	
	0	0	0	0	8	38	0	0	0	0	
TD-E	0	0	0	0	9	39	0	0	0	0	
	0	0	0	0	10	40	0	0	0	0	SMC-E
	0	0	0	0	11	41	0	0	0	0	
	0	0	0	0	12	42	0	0	0	0	
	0	0	0	0	13	43	0	0	0	0	HMC-E
	0	0	0	0	14	44	0	0	0	0	
SMC-D	0	0	0	0	15	45	0	0	0	0	HMC-COMPLETE E
	0	0	0	0	16	46	0	0	0	0	BLOW E
TD-E	0	0	0	0	17	47	0	0	0	0	
	0	0	0	0	18	48	0	0	0	0	
	0	0	0	0	19	49	0	0	0	0	
	0	0	0	0	20	50	0	0	0	0	
	0	0	0	0	21	51	0	0	0	0	
TAP-E	0	0	0	0	22	52	0	0	0	0	
	0	0	0	0	23	53	0	0	0	0	TD-D
	0	0	0	0	24	54	0	0	0	0	
	0	0	0	0	25	55	0	0	0	0	
	0	0	0	0	26	56	0	0	0	0	
HMC-D 44407	0	0	0	0	27	57	0	0	0	0	TAP-D
	0	0	0	0	28	58	—	—	—	—	END OBSERVATION
	0	0	0	0	29	59	—	—	—	—	

Additional info (include steam dissipation point)

Observer's Signature: Chet Dulin

20071107 Method 9 Inspection Form.doc

OCS Environmental, Inc.
Method 9 Source Layout Sketch

Date: 11/20/07
Observer Name: Chet Dulin
Begin Time: 06:45 Time End: 08:57

No Sun Visible Times
06:45
07:15
07:45
08:00
08:30
08:57

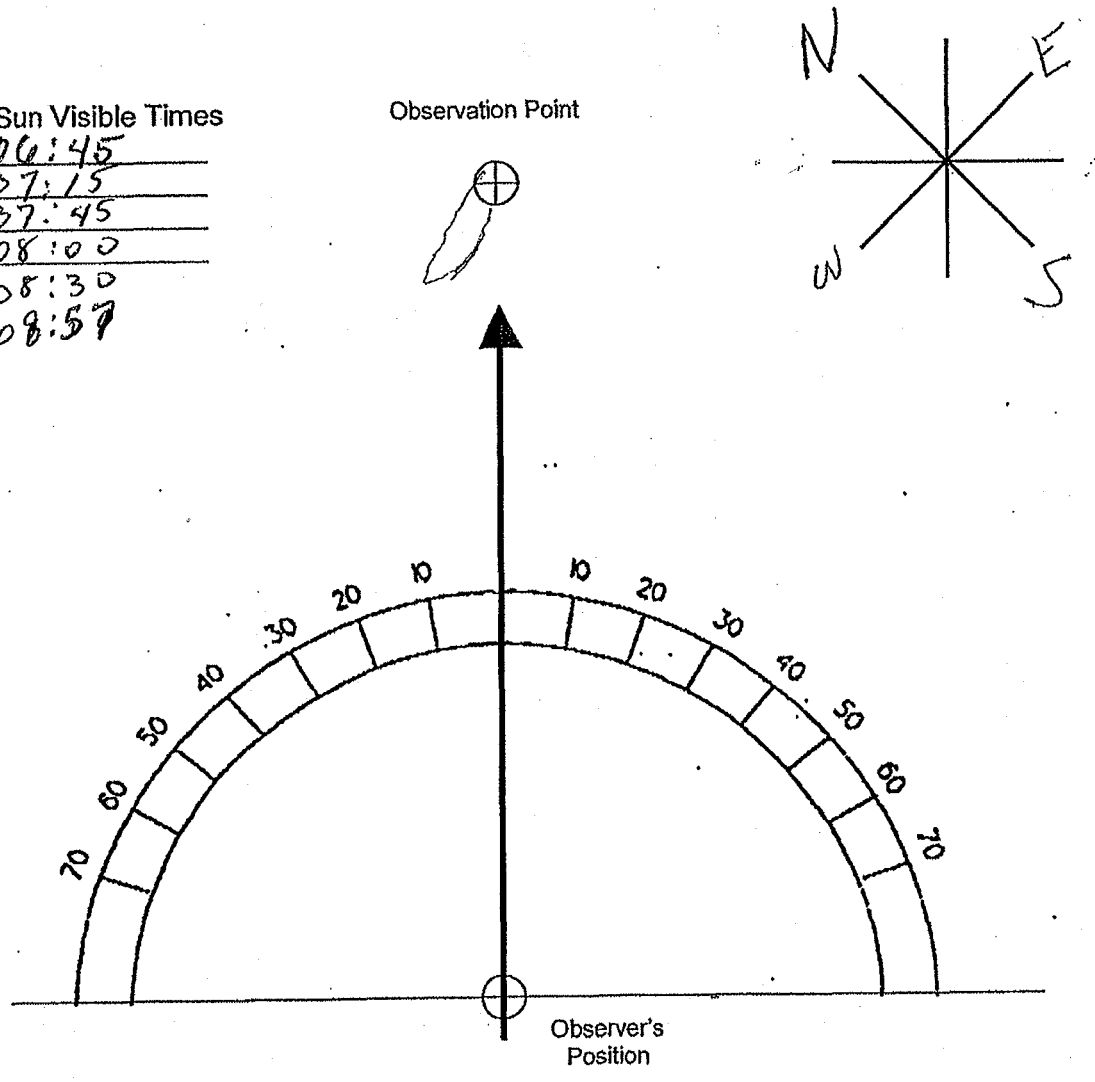

Signature: Chet Dulin

20071107 Method 9 Source Layout Sketch.doc

8-4

OCS Environmental, Inc.

U.S. Steel Gary Works
Emissions Inspection Summary

Date: 11 128 107

Start Time: 07:15 AM / PM

End Time: 09:25 AM / PM

No. 2 Precarbon ESP

BOP	Roof Monitor		Gas Cleaners	NORTH STACK
QBOP	Roof Monitor		Gas Cleaners	
Blast Furnace	4	6	8	14
Blast Furnace Top	4	6	8	14

The following events or operations contributed to significant emissions:

Time	Heat/Cast Number	Operation	Comments

20071107 Inspection Summary.doc

OCS Environmental, Inc.
Method 9 VE Inspection Form

			Start	End
Date:	11-28-07			
Source:	1 BOP GCS-N	Emissions color:	AS NOTED	SAME
Observation Start Time:	07:15	Background:	SKY	
Observation End Time:	07:59	Sky Conditions:	OVERCAST	
Observer's Position:	SP 4	Wind Speed:	12	
Distance to source:	360 YDS	Wind Direction:	SO	
Direction to source:	NE	Ambient Temp:	29°	
	40°	Relative Humidity%:	85%	
Height of source:	157'	Wet Bulb Temp:	N/A	
Vertical angle to source:	9°			

Plume Type: Attached Detached None

Comments	0	15	30	45			0	15	30	45	Comments
					0	30	0	0	0	0	
					1	31	0	0	0	0	
					2	32	0	0	0	0	
					3	33	0	0	0	0	TAP D
					4	34	0	0	0	0	
					5	35	0	0	0	0	
					6	36	0	0	0	0	
					7	37	0	0	0	0	
					8	38	0	0	0	0	
					9	39	0	0	0	0	
					10	40	0	0	0	0	
					11	41	0	0	0	0	
					12	42	0	0	0	0	
					13	43	0	0	0	0	STOP BLOW
					14	44	0	0	0	0	
BLOW IN PORD	0	0	0	0	15	45	0	0	0	0	
44495	0	0	0	0	16	46	0	0	0	0	
	0	0	0	0	17	47	0	0	0	0	
	0	0	0	0	18	48	0	0	0	0	
	0	0	0	0	19	49	0	0	0	0	
	0	0	0	0	20	50	0	0	0	0	
SMC - E 45276	0	0	0	0	21	51	0	0	0	0	
	0	0	0	0	22	52	0	0	0	0	
	0	0	0	0	23	53	0	0	0	0	
HMC - E	0	0	0	0	24	54	0	0	0	0	
TD - D	0	0	0	0	25	55	0	0	0	0	
HMC COMP E	0	0	0	0	26	56	0	0	0	0	
BLOW E	0	0	0	0	27	57	0	0	0	0	
	0	0	0	0	28	58	0	0	0	0	
	0	0	0	0	29	59	0	0	0	0	

Additional info (include steam dissipation point)

Observer's Signature

OCS Environmental, Inc.
Method 9 VE Inspection Form

			Start	End
Date:	11-28-07			
Source:	1BOP GCS -N	Emissions color:	AS NOTED	SAME
Observation Start Time:	08:00	Background:	SKY	
Observation End Time:	08:59	Sky Conditions:	OVERCAST	
Observer's Position:	SP4	Wind Speed:	12	
Distance to source:	360 YDS	Wind Direction:	50,	
Direction to source:	NE 40°	Ambient Temp:	29°	
		Relative Humidity%:	85%	
Height of source:	157'	Wet Bulb Temp:	N/A	
Vertical angle to source:	9°			

Plume Type: Attached Detached None

Comments	0	15	30	45			0	15	30	45	Comments
	0	0	0	0	0	30	5	0	0	0	
	0	0	0	0	1	31	0	0	0	0	
	0	0	0	0	2	32	10	10	10	0	BROWN TD-E
	0	0	0	0	3	33	0	0	0	0	
	0	0	0	0	4	34	0	0	0	0	
	0	0	0	0	5	35	0	0	0	0	
	0	0	0	0	6	36	0	0	0	0	
	0	0	0	0	7	37	0	0	0	0	REBLOW E
	0	0	0	0	8	38	0	0	0	0	
	0	0	0	0	9	39	0	0	0	0	
	0	0	0	0	10	40	0	0	0	0	
	0	0	0	0	11	41	0	0	0	0	TAP E
	0	0	0	0	12	42	0	0	0	0	
	0	0	0	0	13	43	0	0	0	0	
	0	0	0	0	14	44	0	0	0	0	
RESUME BLOW NO IGNITE	0	0	0	0	15	45	0	0	0	0	
	0	0	0	0	16	46	0	0	0	0	
	0	0	0	0	17	47	0	0	0	0	
RESUME BLOW NO IGNITED	0	0	0	0	18	48	0	0	0	0	
	0	0	0	0	19	49	0	0	0	0	
	0	0	0	0	20	50	0	0	0	0	
RESUME BLOW NO IGNITE	0	0	0	0	21	51	0	0	0	0	
	0	0	0	0	22	52	0	0	0	0	
	0	0	0	0	23	53	0	0	0	0	
RESUME BLOW E NO IGNITED	0	0	0	0	24	54	0	0	0	0	SMC-E 45777
	0	0	0	0	25	55	0	0	0	0	
	0	0	0	0	26	56	0	0	0	0	
RESUME BLOW E	0	0	0	0	27	57	0	0	0	0	HMC-E
	0	0	0	0	28	58	0	0	5	5	BROWN
BROWN	0	10	10	5	29	59	10	5	0	0	HMC COMP E

Additional info (include steam dissipation point)

Observer's Signature: Chet Dulin

OCS Environmental, Inc.
Method 9 VE Inspection Form

			Start	End
Date:	11-28-07	Emissions color:	AS NOTED	SAME
Source:	1 BOP GCS - N	Background:	SKY	
Observation Start Time:	09:00	Sky Conditions:	CLOUDY	
Observation End Time:	09:25	Wind Speed:	12	
Observer's Position:	SP4	Wind Direction:	SO	
Distance to source:	300 YDS	Ambient Temp:	29°	
Direction to source:	NE 40°	Relative Humidity%:	85%	
Height of source:	157'	Wet Bulb Temp:	N/A	
Vertical angle to source:	9°			

Plume Type: Attached Detached None

Comments	0	15	30	45			0	15	30	45	Comments
BLOW - E	0	0	0	0	0	30					
	0	0	0	0	1	31					
	0	0	0	0	2	32					
	0	0	0	0	3	33					
	0	0	0	0	4	34					
	0	0	0	0	5	35					
	0	0	0	0	6	36					
	0	0	0	0	7	37					
	0	0	0	0	8	38					
	0	0	0	0	9	39					
	0	0	0	0	10	40					
	0	0	0	0	11	41					
	0	0	0	0	12	42					
	0	0	0	0	13	43					
	0	0	0	0	14	44					
	0	0	0	0	15	45					
	0	0	0	0	16	46					
	0	0	0	0	17	47					
	0	0	0	0	18	48					
	0	0	0	0	19	49					
	0	0	0	0	20	50					
	0	0	0	0	21	51					
TD-E	0	0	0	0	22	52					
	0	0	0	0	23	53					
	0	0	0	0	24	54					
TAPE	0	0	0	0	25	55					
					26	56					
					27	57					
					28	58					
					29	59					

Additional info (include steam dissipation point)

Observer's Signature

20071107 Method 9 Inspection Form.doc

OCS Environmental, Inc.
Method 9 Source Layout Sketch

Date: 11/28/07

Observer Name: Chet Dwain

Begin Time: 07:15

Time End: 09:25

No Sun Visible Times
07:30
08:00
08:30
09:00
09:25

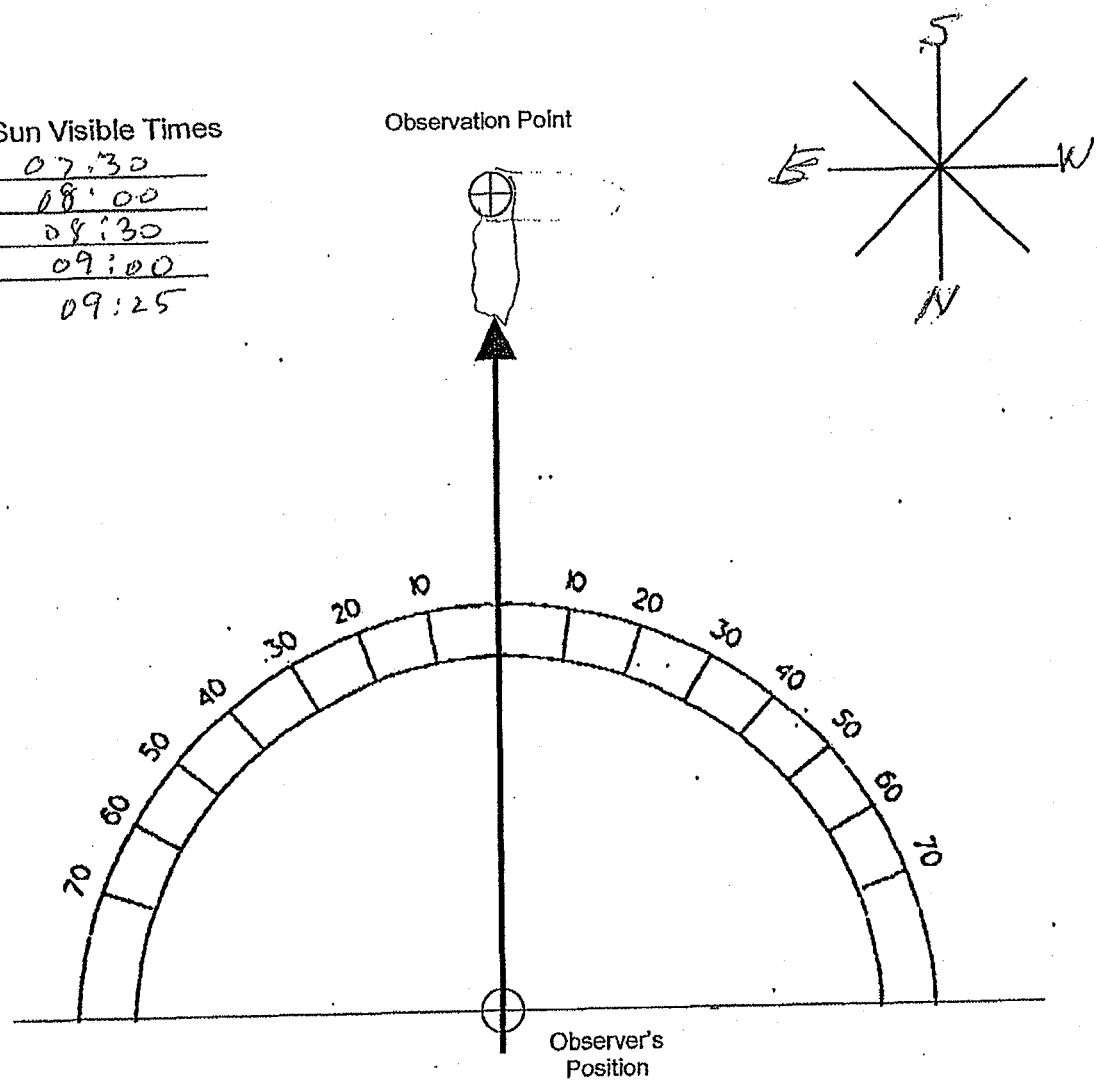

Signature: Chet Dwain

20071107 Method 9 Source Layout Sketch.doc

8-5

OCS Environmental, Inc.

U.S. Steel Gary Works
Emissions Inspection Summary

Date: 12/6/07

Start Time: 10:30 AM / PM

End Time: 12:30 AM / PM

No. 2 Precarbon ESP

BOP Roof Monitor Gas Cleaners North + South

QBOP Roof Monitor Gas Cleaners

Blast Furnace	4	6	8	14
Blast Furnace Top	4	6	8	14

The following events or operations contributed to significant emissions:

Time	Heat/Cast Number	Operation	Comments
North Stk	- No exceedance		
South Stk	- No exceedance		

20071107 Inspection Summary.doc

OCS Environmental, Inc.
Method 9 VE Inspection Form

Page 1 of 3

Date:	12-6-07
Source:	#1 Bop GC
Observation Start Time:	10:30 A
Observation End Time:	11:00 A
Observer's Position:	SP5
Distance to source:	220 YDS
Direction to source:	NE 60°
Height of source:	157 ft
Vertical angle to source:	15°

	Start	End
Emissions color:	As Noted	Same
Background:	Sky	
Sky Conditions:	Cldy	
Wind Speed:	3	
Wind Direction:	SW	
Ambient Temp:	8°	
Relative Humidity%:	100%	
Wet Bulb Temp:	/	/

Plume Type: Attached Detached None

Comments	0	15	30	45			0	15	30	45	Comments
					0	30	0	0	0	0	Norm SP
					1	31	0	0	0	0	
					2	32	0	0	0	0	
					3	33	0	0	0	0	
					4	34	0	0	0	0	
					5	35	0	0	0	0	
					6	36	0	0	0	0	
					7	37	0	0	0	0	
					8	38	0	0	0	0	
					9	39	0	0	0	0	
					10	40	0	0	0	0	
					11	41	0	0	0	0	
					12	42	0	0	0	0	
					13	43	0	0	0	0	
					14	44	0	0	0	0	
					15	45	0	0	0	0	
					16	46	0	0	0	0	
					17	47	0	0	0	0	
					18	48	0	0	0	0	
					19	49	0	0	0	0	
					20	50	0	0	0	0	
					21	51	0	0	0	0	
					22	52	0	0	0	0	
					23	53	0	0	0	0	
					24	54	0	0	0	0	
					25	55	0	0	0	0	
					26	56	0	0	0	0	
					27	57	0	0	0	0	
					28	58	0	0	0	0	
					29	59	0	0	0	0	

Additional info (include steam dissipation point)
* Steam Cloud Attached to Plume
Any Readings Made After Steam Dissipates

Observer's Signature

20071107 Method 9 Inspection Form.doc

OCS Environmental, Inc.
Method 9 VE Inspection Form

			Start	End
Date:	12/6/07	Emissions color:	As Dark	Same
Source:	#1 Bot Gr	Background:	Sky	
Observation Start Time:	1100 A	Sky Conditions:	Cloudy	
Observation End Time:	1200 P	Wind Speed:	3	
Observer's Position:	SPS	Wind Direction:	SW	
Distance to source:	220°	Ambient Temp:	8°	
Direction to source:	NE 60°	Relative Humidity%:	100%	
Height of source:	157 ft	Wet Bulb Temp:	–	
Vertical angle to source:	15°			

Plume Type: Attached Detached None

Comments	0	15	30	45			0	15	30	45	Comments
North Stk	0	0	0	0	0	30	0	0	0	0	South Stk
	0	0	0	0	1	31	0	0	0	0	
	0	0	0	0	2	32	0	0	0	0	
	0	0	0	0	3	33	0	0	0	0	
	0	0	0	0	4	34	0	0	0	0	
	0	0	0	0	5	35	0	0	0	0	
	0	0	0	0	6	36	0	0	0	0	
	0	0	0	0	7	37	0	0	0	0	
	0	0	0	0	8	38	0	0	0	0	
	0	0	0	0	9	39	0	0	0	0	
	0	0	0	0	10	40	0	0	0	0	
	0	0	0	0	11	41	0	0	0	0	
	0	0	0	0	12	42	0	0	0	0	
	0	0	0	0	13	43	0	0	0	0	
	0	0	0	0	14	44	0	0	0	0	
	0	0	0	0	15	45	0	0	0	0	
	0	0	0	0	16	46	0	0	0	0	
	0	0	0	0	17	47	0	0	0	0	
	0	0	0	0	18	48	0	0	0	0	
	0	0	0	0	19	49	0	0	0	0	
	0	0	0	0	20	50	0	0	0	0	
	0	0	0	0	21	51	0	0	0	0	
	0	0	0	0	22	52	0	0	0	0	Steam
-6 Gray	20	15	10	5	23	53	0	0	0	0	
	0	0	0	0	24	54	0	0	0	0	
	0	0	0	0	25	55	0	0	0	0	
	0	0	0	0	26	56	0	0	0	0	
	0	0	0	0	27	57	0	0	0	0	
	0	0	0	0	28	58	0	0	0	0	
End North Stk	0	0	0	0	29	59	0	0	0	0	

Additional info (include steam dissipation point)
See Notes Page (1)

Observer's Signature

20071107 Method 9 Inspection Form.doc

OCS Environmental, Inc.
Method 9 VE Inspection Form

Page 3 of 3

Date:	12/6/07
Source:	#1 Gap Ge
Observation Start Time:	1200P
Observation End Time:	1230P
Observer's Position:	SPS
Distance to source:	220 YDS
Direction to source:	NE 60°
Height of source:	152ft
Vertical angle to source:	15°

	Start	End
Emissions color:	As Noted	Same
Background:	Sky	
Sky Conditions:	Cldy	
Wind Speed:	3	
Wind Direction:	SW	
Ambient Temp:	8°	
Relative Humidity%:	100%	
Wet Bulb Temp:	–	

Plume Type: Attached Detached None

Comments	0	15	30	45			0	15	30	45	Comments
Sand Stk	0	0	0	0	0	30					
	0	0	0	0	1	31					
	0	0	0	0	2	32					
Steam	0	0	0	0	3	33					
	0	0	0	0	4	34					
	0	0	0	0	5	35					
	0	0	0	0	6	36					
	0	0	0	0	7	37					
	0	0	0	0	8	38					
	0	0	0	0	9	39					
	0	0	0	0	10	40					
	0	0	0	0	11	41					
	0	0	0	0	12	42					
	0	0	0	0	13	43					
	0	0	0	0	14	44					
	0	0	0	0	15	45					
	0	0	0	0	16	46					
	0	0	0	0	17	47					
	0	0	0	0	18	48					
	0	0	0	0	19	49					
	0	0	0	0	20	50					
	0	0	0	0	21	51					
	0	0	0	0	22	52					
	0	0	0	0	23	53					
	0	0	0	0	24	54					
	0	0	0	0	25	55					
	0	0	0	0	26	56					
	0	0	0	0	27	57					
	0	0	0	0	28	58					
Gap Sand Stk	0	0	0	0	29	59					

Additional info (include steam dissipation point)
See Notes Page (1)

Observer's Signature

20071107 Method 9 Inspection Form.doc

OCS Environmental, Inc.
Method 9 Source Layout Sketch

Date: 12, 4, 07

Observer Name: T. SMITH

Begin Time: 10:30A

Time End: 12:30P

No Sun Visible Times

Observation Point

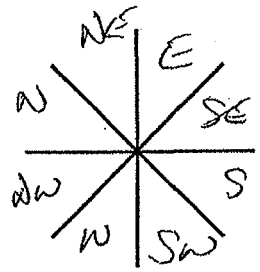

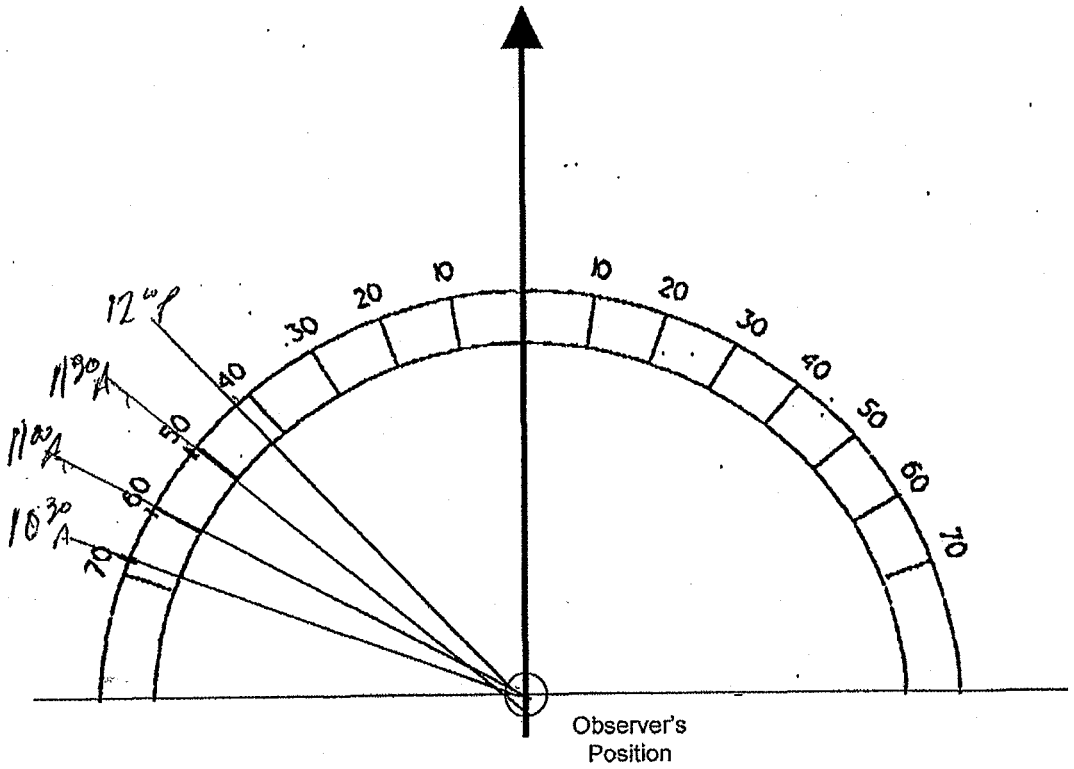

Signature:

20071107 Method 9 Source Layout Sketch.doc

8-6

OCS Environmental, Inc.

U.S. Steel Gary Works
Emissions Inspection Summary

Date: 11/16/07

Start Time: 10:30:00 (AM) / PM

End Time: 12:29:45 AM / (PM)

No. 2 Precarbon ESP

(BOP)	Roof Monitor		(Gas Cleaners)	
QBOP	Roof Monitor		Gas Cleaners	
Blast Furnace	4	6	8	14
Blast Furnace Top	4	6	8	14

The following events or operations contributed to significant emissions:

Time	Heat/Cast Number	Operation	Comments

20071107 Inspection Summary.doc

OCS Environmental, Inc.
Method 9 VE Inspection Form

			Start	End
Date:	11-16-07			
Source:	#1 BOP GCS	Emissions color:	AS NOTED	SAME
Observation Start Time:	10:30:00	Background:	GREY SKY	
Observation End Time:	10:59:45	Sky Conditions:	CLOUDY	
Observer's Position:	SPS	Wind Speed:	5-10	
Distance to source:	220 YARDS	Wind Direction:	SW	
Direction to source:	NE 60°	Ambient Temp:	37°	
		Relative Humidity%:	94%	
Height of source:	157 FEET	Wet Bulb Temp:		
Vertical angle to source:	15°			

Plume Type: (Attached) Detached None

NORTH STACK

Comments	0	15	30	45			0	15	30	45	Comments
					0	30	0	0	0	0	BEGIN
					1	31	0	0	0	0	
					2	32	0	0	0	0	
					3	33	0	0	0	0	
					4	34	0	0	0	0	
					5	35	0	0	0	0	
					6	36	0	0	0	0	
					7	37	0	0	0	0	
					8	38	0	0	0	0	
					9	39	0	0	0	0	
					10	40	0	0	0	0	
N/A					11	41	0	0	0	0	
					12	42	0	0	0	0	
					13	43	0	0	0	0	
					14	44	0	0	0	0	
					15	45	0	0	0	0	
					16	46	0	0	0	0	
					17	47	0	0	0	0	
					18	48	0	0	0	0	
					19	49	0	0	0	0	
					20	50	0	0	0	0	
					21	51	0	0	0	0	
					22	52	0	0	0	0	
					23	53	0	0	0	0	
					24	54	0	0	0	0	
					25	55	0	0	0	0	
					26	56	0	0	0	0	
					27	57	0	0	0	0	
					28	58	0	0	0	0	
					29	59	0	0	0	0	

Additional info (include steam dissipation point)

Observer's Signature

Dan McClure

20071107 Method 9 Inspection Form.doc

OCS Environmental, Inc.
Method 9 VE Inspection Form

Date: 11-16-07
Source: #1 BOP GCS
Observation Start Time: 11:00:00
Observation End Time: 11:59:45
Observer's Position: SP5
Distance to source: 220 YARDS
Direction to source: NE 60°

Height of source: 157 FEET
Vertical angle to source: 15°

	Start	End
Emissions color:	AS NOTED	SAME
Background:	GREY SKY	↓
Sky Conditions:	CLOUDY	↓
Wind Speed:	5-10	↓
Wind Direction:	SW	↓
Ambient Temp:	37°	↓
Relative Humidity%:	94%	↓
Wet Bulb Temp:		↓

Plume Type: (Attached) Detached None

NORTH STACK — SOUTH STACK

Comments	0	15	30	45			0	15	30	45	Comments
	0	0	0	0	0	30	0	0	0	0	
	0	0	0	0	1	31	0	0	0	0	
	0	0	0	0	2	32	0	0	0	0	
	0	0	0	0	3	33	0	0	0	0	
	0	0	0	0	4	34	0	0	0	0	
	0	0	0	0	5	35	0	0	0	0	
	0	0	0	0	6	36	0	0	0	0	
	0	0	0	0	7	37	0	0	0	0	
	0	0	0	0	8	38	0	0	0	0	
	0	0	0	0	9	39	0	0	0	0	
	0	0	0	0	10	40	0	0	0	0	
	0	0	0	0	11	41	0	0	0	0	
	0	0	0	0	12	42	0	0	0	0	
	0	0	0	0	13	43	0	0	0	0	
	0	0	0	0	14	44	0	0	0	0	
	0	0	0	0	15	45	0	0	0	0	
	0	0	0	0	16	46	0	0	0	0	
	0	0	0	0	17	47	0	0	0	0	
	0	0	0	0	18	48	0	0	0	0	
	0	0	0	0	19	49	0	0	0	0	
	0	0	0	0	20	50	0	0	0	0	
	0	0	0	0	21	51	0	0	0	0	
	0	0	0	0	22	52	0	0	0	0	
	0	0	0	0	23	53	0	0	0	0	
	0	0	0	0	24	54	0	0	0	0	
	0	0	0	0	25	55	0	0	0	0	
	0	0	0	0	26	56	0	0	0	0	
	0	0	0	0	27	57	0	0	0	0	
	0	0	0	0	28	58	0	0	0	0	
	0	0	0	0	29	59	0	0	0	0	

Additional info (include steam dissipation point)

Observer's Signature: Dan McClure

20071107 Method 9 Inspection Form.doc

OCS Environmental, Inc.
Method 9 VE Inspection Form

Date: 11-16-07
Source: #1 BOP GCS
Observation Start Time: 12:00:00
Observation End Time: 12:29:45
Observer's Position: SP5
Distance to source: 220 YARDS
Direction to source: NE 60°

Height of source: 157 FEET
Vertical angle to source: 15°

	Start	End
Emissions color:	AS NOTED	SAME
Background:	GREY SKY	↓
Sky Conditions:	CLOUDY	↓
Wind Speed:	5-10	↓
Wind Direction:	SW	↓
Ambient Temp:	37°	↓
Relative Humidity%:	94%	↓
Wet Bulb Temp:		↓

Plume Type: Attached Detached None

SOUTH STACK

Comments	0	15	30	45			0	15	30	45	Comments
	0	0	0	0	0	30					
	0	0	0	0	1	31					
	0	0	0	0	2	32					
	0	0	0	0	3	33					
	0	0	0	0	4	34					
	0	0	0	0	5	35					
	0	0	0	0	6	36					
	0	0	0	0	7	37					
	0	0	0	0	8	38					
	0	0	0	0	9	39					
	0	0	0	0	10	40					
	0	0	0	0	11	41					
	0	0	0	0	12	42					
	0	0	0	0	13	43					
	0	0	0	0	14	44					
	0	0	0	0	15	45					
	0	0	0	0	16	46					
	0	0	0	0	17	47					
	0	0	0	0	18	48					
	0	0	0	0	19	49					
	0	0	0	0	20	50					
	0	0	0	0	21	51					
	0	0	0	0	22	52					
	0	0	0	0	23	53					
	0	0	0	0	24	54					
	0	0	0	0	25	55					
	0	0	0	0	26	56					
	0	0	0	0	27	57					
	0	0	0	0	28	58					
	0	0	0	0	29	59					

N/A

Additional info (include steam dissipation point)

Observer's Signature: Dan McClure

20071107 Method 9 Inspection Form.doc

OCS Environmental, Inc.
Method 9 Source Layout Sketch

Date: 11/16/07

Observer Name: DAN MCCLURE

Begin Time: 10:30:00 Time End: 12:29:45

No Sun Visible Times
10:30
11:00
11:30

Observation Point

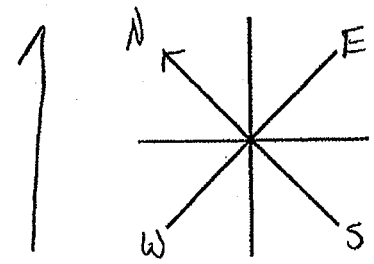

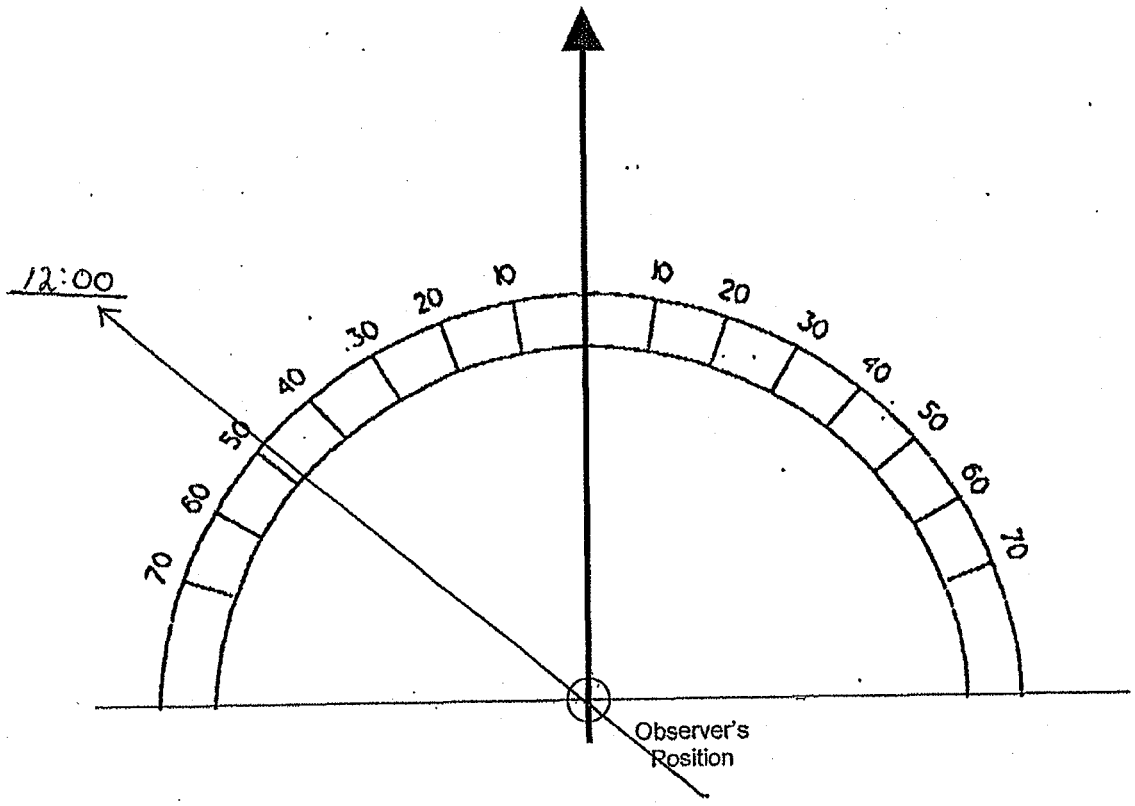

Signature: Dan McClure

20071107 Method 9 Source Layout Sketch.doc

8-7

OCS Environmental, Inc.

U.S. Steel Gary Works
Emissions Inspection Summary

Date: 12, 3, 07

Start Time: 10:55 AM / ~~PM~~

End Time: 12:55 ~~AM~~ / PM

No. 2 Precarbon ESP

BOP	Roof Monitor		Gas Cleaners	Down Stack
QBOP	Roof Monitor		Gas Cleaners	
Blast Furnace	4	6	8	14
Blast Furnace Top	4	6	8	14

The following events or operations contributed to significant emissions:

Time	Heat/Cast Number	Operation	Comments
No exceedance			

20071107 Inspection Summary.doc

OCS Environmental, Inc.
Method 9 VE Inspection Form

Page 1 of 3

			Start	End
Date:	12/3/07	Emissions color:	As Noted	Same
Source:	#1 Gel GC	Background:	Sky	
Observation Start Time:	1055A	Sky Conditions:	Pt Cry	
Observation End Time:	1100A	Wind Speed:	10	
Observer's Position:	SPS	Wind Direction:	WNW	
Distance to source:	220 Yards	Ambient Temp:	30°	
Direction to source:	NE 60°	Relative Humidity%:	60%	
Height of source:	157 feet	Wet Bulb Temp:	—	
Vertical angle to source:	15°			

Plume Type: Attached Detached None

Comments	0	15	30	45			0	15	30	45	Comments
North Stack					0	30					
					1	31					
					2	32					
					3	33					
					4	34					
					5	35					
					6	36					
					7	37					
					8	38					
					9	39					
					10	40					
					11	41					
					12	42					
					13	43					
					14	44					
					15	45					
					16	46					
					17	47					
					18	48					
					19	49					
					20	50					
					21	51					
					22	52					
					23	53					
					24	54					North Stk
					25	55	0	0	0	0	Begin Observation
					26	56	0	0	0	0	
					27	57	0	0	0	0	
					28	58	0	0	0	0	
					29	59	0	0	0	0	

Additional info (include steam dissipation point)

Observer's Signature

20071107 Method 9 Inspection Form.doc

OCS Environmental, Inc.
Method 9 VE Inspection Form

Date: 12/3/07
Source: #1 Bulk GC
Observation Start Time: 1100 A
Observation End Time: 1200 P
Observer's Position: SPS
Distance to source: 220 YARDS
Direction to source: NE 60°

Height of source: 157 ft
Vertical angle to source: 15°

	Start	End
Emissions color:	As Dorl	Same
Background:	Sky	
Sky Conditions:	Cloudy	
Wind Speed:	10	
Wind Direction:	WSW	
Ambient Temp:	30°	
Relative Humidity%:	60%	
Wet Bulb Temp:	—	

Plume Type: Attached Detached None

Comments	0	15	30	45			0	15	30	45	Comments
Dorm Stack	0	0	0	0	0	30	0	0	0	0	
	0	0	0	0	1	31	0	0	0	0	
	0	0	0	0	2	32	0	0	0	0	
	0	0	0	0	3	33	0	0	0	0	
	0	0	0	0	4	34	0	0	0	0	
	0	0	0	0	5	35	0	0	0	0	
	0	0	0	0	6	36	0	0	0	0	
	0	0	0	0	7	37	0	0	0	0	
	0	0	0	0	8	38	0	0	0	0	
	0	0	0	0	9	39	0	0	0	0	
	0	0	0	0	10	40	0	0	0	0	
	0	0	0	0	11	41	0	0	0	0	
	0	0	0	0	12	42	0	0	0	0	
	0	0	0	0	13	43	15	10	5	0	Gray 30
	0	0	0	0	14	44	0	0	0	0	
	0	0	0	0	15	45	0	0	0	0	
	0	0	0	0	16	46	0	0	0	0	
	0	0	0	0	17	47	0	0	0	0	
	0	0	0	0	18	48	0	0	0	0	
	0	0	0	0	19	49	0	0	0	0	
	0	0	0	0	20	50	0	0	0	0	
	0	0	0	0	21	51	0	0	0	0	
	0	0	0	0	22	52	0	0	0	0	
	0	0	0	0	23	53	0	0	0	0	
	0	0	0	0	24	54	0	0	0	0	
	0	0	0	0	25	55	0	0	0	0	
	0	0	0	0	26	56	0	0	0	0	
	0	0	0	0	27	57	0	0	0	0	
	0	0	0	0	28	58	0	0	0	0	
	0	0	0	0	29	59	0	0	0	0	

Additional info (include steam dissipation point)

Observer's Signature

20071107 Method 9 Inspection Form.doc

OCS Environmental, Inc.
Method 9 VE Inspection Form

Page 3 of 3

Date:	12/3/07
Source:	#1 Bed GC
Observation Start Time:	12:00
Observation End Time:	12:55
Observer's Position:	SPS
Distance to source:	220 Yards
Direction to source:	NE 60'
Height of source:	157 ft
Vertical angle to source:	15°

	Start	End
Emissions color:	As Sand	Same
Background:	Sky	
Sky Conditions:	Partly Cloudy	
Wind Speed:	10	
Wind Direction:	WNW	
Ambient Temp:	80°	
Relative Humidity%:	60%	
Wet Bulb Temp:	/	

Plume Type: Attached Detached None

Comments	0	15	30	45			0	15	30	45	Comments
Non Smoke	0	0	0	0	0	30	0	0	0	0	
	0	0	0	0	1	31	0	0	0	0	
	0	0	0	0	2	32	0	0	0	0	
	0	0	0	0	3	33	0	0	0	0	
	0	0	0	0	4	34	0	0	0	0	
	0	0	0	0	5	35	0	0	0	0	
	0	0	0	0	6	36	0	0	0	0	
	0	0	0	0	7	37	0	0	0	0	
45 Gray	0	0	25	20	8	38	0	0	0	0	
45 ✓	15	15	10	5	9	39	0	0	0	0	
5 95 ✓	5	0	0	0	10	40	0	0	0	0	
	0	0	0	0	11	41	0	0	0	0	
	0	0	0	0	12	42	0	0	0	0	
	0	0	0	0	13	43	0	0	0	0	
	0	0	0	0	14	44	0	0	0	0	
	0	0	0	0	15	45	0	0	0	0	
	0	0	0	0	16	46	0	0	0	0	
	0	0	0	0	17	47	0	0	0	0	
	0	0	0	0	18	48	0	0	0	0	
	0	0	0	0	19	49	0	0	0	0	
	0	0	0	0	20	50	0	0	0	0	
	0	0	0	0	21	51	0	0	0	0	
	0	0	0	0	22	52	0	0	0	0	
	0	0	0	0	23	53	0	0	0	0	
	0	0	0	0	24	54	0	0	0	0	
	0	0	0	0	25	55	X	X	X	X	End Observation
	0	0	0	0	26	56					
	0	0	0	0	27	57					
	0	0	0	0	28	58					
	0	0	0	0	29	59					

Additional info (include steam dissipation point)

Observer's Signature

20071107 Method 9 Inspection Form.doc

OCS Environmental, Inc.
Method 9 Source Layout Sketch

Date: 12/3/07
Observer Name: T. Smith
Begin Time: 10:55 A
Time End: 12:55 P

"North Stack"
Observation Point

No Sun Visible Times

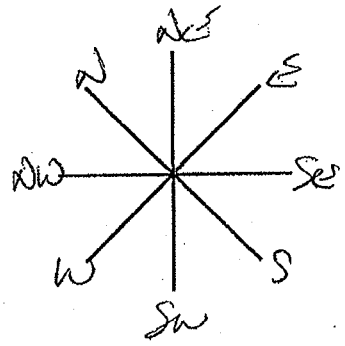

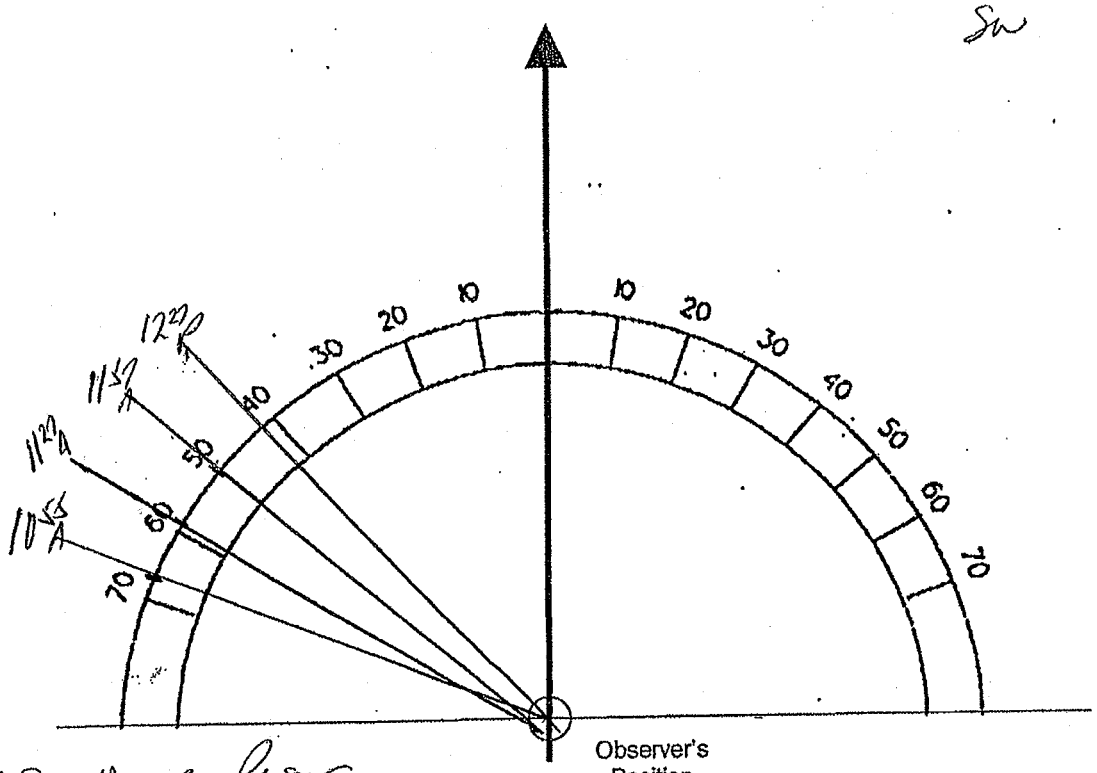

12:27P Sun Went Behind Present.

Signature:

20071107 Method 9 Source Layout Sketch.doc

8 - 8

OCS Environmental, Inc.

U.S. Steel Gary Works
Emissions Inspection Summary

Date: 11/14/07

Start Time: 07:00 AM / PM

End Time: 09:00 AM / PM

No. 2 Precarbon ESP

BOP	Roof Monitor		Gas Cleaners	
QBOP	Roof Monitor		Gas Cleaners	
Blast Furnace	4	6	8	14
Blast Furnace Top	4	6	8	14

The following events or operations contributed to significant emissions:

Time	Heat/Cast Number	Operation	Comments

20071107 Inspection Summary.doc

OCS Environmental, Inc.
Method 9 VE Inspection Form

Page 1 of 2

Date: 11-14-07
Source: #1 BOPGCS SO2
Observation Start Time: 07:00
Observation End Time:
Observer's Position: SP4
Distance to source: 360 yds
Direction to source: NE 40°
Height of source: 190'
Vertical angle to source: 9°

	Start	End
Emissions color:	AS NOTED	AS NOTED
Background:	SKY	SKY
Sky Conditions:	CLOUDY	CLOUDY
Wind Speed:	9	9
Wind Direction:	W	W
Ambient Temp:	52°	52°
Relative Humidity%:	79 %	79 %
Wet Bulb Temp:		

Plume Type: (Attached) Detached None

Comments	0	15	30	45			0	15	30	45	Comments
	0	0	0	0	0	30	0	0	0	0	
	0	0	0	0	1	31	0	0	0	0	
	0	0	0	0	2	32	0	0	0	0	
	0	0	0	0	3	33	0	0	0	0	
	0	0	0	0	4	34	0	0	0	0	
	0	0	0	0	5	35	0	0	0	0	
	0	0	0	0	6	36	0	0	0	0	
	0	0	0	0	7	37	0	0	0	0	
	0	0	0	0	8	38	0	0	0	0	
	0	0	0	0	9	39	0	0	0	0	
	0	0	0	0	10	40	0	0	0	0	
	0	0	0	0	11	41	0	0	0	0	
	0	0	0	0	12	42	0	0	0	0	
	0	0	0	0	13	43	0	0	0	0	
	0	0	0	0	14	44	0	0	0	0	
	0	0	0	0	15	45	0	0	0	0	
	0	0	0	0	16	46	0	0	0	0	
	0	0	0	0	17	47	0	0	0	0	
	0	0	0	0	18	48	0	0	0	0	
	0	0	0	0	19	49	0	0	0	0	
	0	0	0	0	20	50	0	0	0	0	
	0	0	0	0	21	51	0	0	0	0	
	0	0	0	0	22	52	0	0	0	0	
	0	0	0	0	23	53	0	0	0	0	
	0	0	0	0	24	54	0	0	0	0	
	0	0	0	0	25	55	0	0	0	0	
	0	0	0	0	26	56	0	0	0	0	
	0	0	0	0	27	57	0	0	0	0	
	0	0	0	0	28	58	0	0	0	0	
	0	0	0	0	29	59	0	0	0	0	

Additional info (include steam dissipation point)

Observer's Signature

20071107 Method 9 Inspection Form.doc

OCS Environmental, Inc.
Method 9 VE Inspection Form

Date: 11-14-07
Source: #1 BOP GCS NO.
Observation Start Time: 08:00
Observation End Time: 08:59
Observer's Position: SE 4
Distance to source: 360 YDS
Direction to source: NE 40°
Height of source: 190'
Vertical angle to source: 9°

	Start	End
Emissions color:	AS NOTED	SAME
Background:	SKY	SKY
Sky Conditions:	CLOUDY	CLOUDY
Wind Speed:	9 MPH	9 MPH
Wind Direction:	W	W
Ambient Temp:	52°	52°
Relative Humidity%:	79%	79%
Wet Bulb Temp:		

Plume Type: Attached Detached None

Comments	0	15	30	45			0	15	30	45	Comments
	0	0	0	0	0	30	0	0	0	0	
	0	0	0	0	1	31	0	0	0	0	
	0	0	0	0	2	32	0	0	0	0	
	0	0	0	0	3	33	0	0	0	0	
	0	0	0	0	4	34	0	0	0	0	
	0	0	0	0	5	35	0	0	0	0	
	0	0	0	0	6	36	0	0	0	0	
	0	0	0	0	7	37	0	0	0	0	
	0	0	0	0	8	38	0	0	0	0	
	0	0	0	0	9	39	0	0	0	0	
	0	0	0	0	10	40	0	0	0	0	
	0	0	0	0	11	41	0	0	0	0	
	0	0	0	0	12	42	0	0	0	0	
	0	0	0	0	13	43	0	0	0	0	
	0	0	0	0	14	44	0	0	0	0	
	0	0	0	0	15	45	0	0	0	0	
	0	0	0	0	16	46	0	0	0	0	
	0	0	0	0	17	47	0	0	0	0	
	0	0	0	0	18	48	0	0	0	0	
	0	0	0	0	19	49	0	0	0	0	
	0	0	0	0	20	50	0	0	0	0	
	0	0	0	0	21	51	0	0	0	0	
	0	0	0	0	22	52	0	0	0	0	
	0	0	0	0	23	53	0	0	0	0	
	0	0	0	0	24	54	0	0	0	0	
	0	0	0	0	25	55	0	0	0	0	
	0	0	0	0	26	56	0	0	0	0	
	0	0	0	0	27	57	0	0	0	0	
	0	0	0	0	28	58	0	0	0	0	
	0	0	0	0	29	59	0	0	0	0	

Additional Info (include steam dissipation point)

Observer's Signature: Chet Dulin

20071107 Method 9 Inspection Form.doc

OCS Environmental, Inc.
Method 9 Source Layout Sketch

Date: 11/14/07
Observer Name: Chet Dulin
Begin Time: 07:00 Time End: 09:00

No Sun Visible Times
07:00
07:30
08:00
08:30
09:00

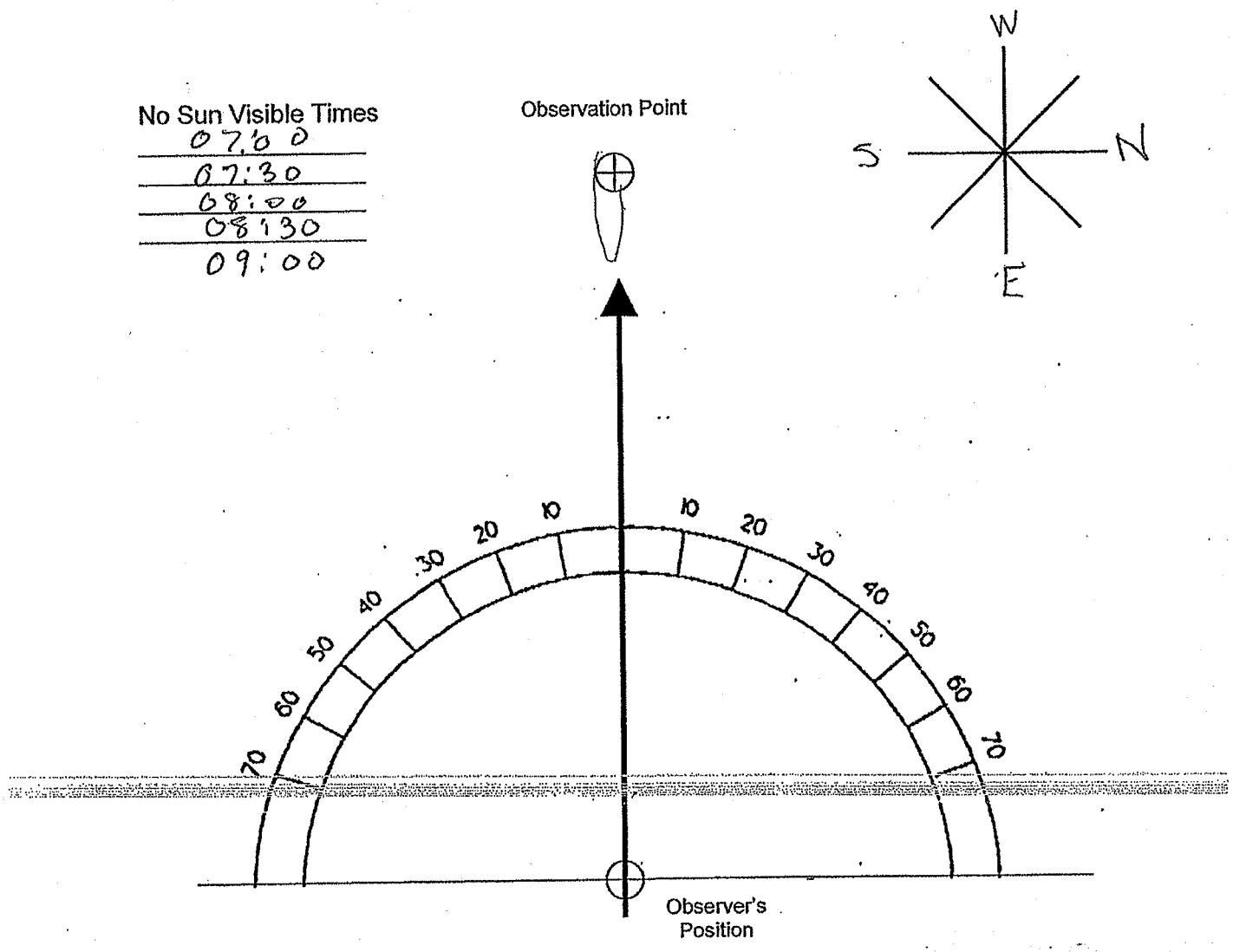

Signature: Chet Dulin

20071107 Method 9 Source Layout Sketch.doc

8-9

OCS Environmental, Inc.

U.S. Steel Gary Works
Emissions Inspection Summary

Date: 11/30/07

Start Time: 1000 AM / PM

End Time: 1200 AM / PM

No. 2 Precarbon ESP

BOP	Roof Monitor		Gas Cleaners	
QBOP	Roof Monitor		Gas Cleaners	
Blast Furnace	4	6	8	14
Blast Furnace Top	4	6	8	14

The following events or operations contributed to significant emissions:

Time	Heat/Cast Number	Operation	Comments

Jon Simpson

20071107 Inspection Summary.doc

OCS Environmental, Inc.
Method 9 VE Inspection Form

North Stack

			Start	End
Date:	11/30/07			
Source:	Bop Gas Stacks	Emissions color:	As Noted	Same
Observation Start Time:	1000	Background:	Sky	
Observation End Time:	1100	Sky Conditions:	Clear	
Observer's Position:	SP5	Wind Speed:	10	
Distance to source:	220 yards	Wind Direction:	SW	
Direction to source:	NE	Ambient Temp:	36	
		Relative Humidity%:	62%	
Height of source:	157'	Wet Bulb Temp:	—	—
Vertical angle to source:	15°			

Plume Type: Attached Detached None

North Stack

Comments	0	15	30	45			0	15	30	45	Comments
Blow-M 48239	0	0	0	0	0	30	0	0	0	0	
	0	0	0	0	1	31	0	0	0	0	
	0	0	0	0	2	32	0	0	0	0	
	0	0	0	0	3	33	0	0	0	0	
	0	0	0	0	4	34	0	0	0	0	Tap-M
	0	0	0	0	5	35	0	0	0	0	
	0	0	0	0	6	36	0	0	0	0	
	0	0	0	0	7	37	0	0	0	0	
	0	0	0	0	8	38	0	0	0	0	
	0	0	0	0	9	39	0	0	0	0	
	0	0	0	0	10	40	0	0	0	0	
	0	0	0	0	11	41	0	0	0	0	
TD-M	0	0	0	0	12	42	0	0	0	0	
	0	0	0	0	13	43	0	0	0	0	
	0	0	0	0	14	44	0	0	0	0	
	0	0	0	0	15	45	0	0	0	0	
	0	0	0	0	16	46	0	0	0	0	
	0	0	0	0	17	47	0	0	0	0	
	0	0	0	0	18	48	0	0	0	0	
	0	0	0	0	19	49	0	0	0	0	
	0	0	0	0	20	50	0	0	0	0	
	0	0	0	0	21	51	0	0	0	0	
	0	0	0	0	22	52	0	0	0	0	
	0	0	0	0	23	53	0	0	0	0	
RD-M	0	0	0	0	24	54	0	0	0	0	
	0	0	0	0	25	55	0	0	0	0	
	0	0	0	0	26	56	0	0	0	0	
TD-M	0	0	0	0	27	57	0	0	0	0	
	0	0	0	0	28	58	0	0	0	0	
	0	0	0	0	29	59	0	0	0	0	

Additional info (include steam dissipation point)

Observer's Signature: Jon Simpson

OCS Environmental, Inc.
Method 9 VE Inspection Form

North Stack

Page 2 of 3

			Start	End
Date:	11/30/07			
Source:	1 Bop Gas Stack's	Emissions color:	As Noted	Same
Observation Start Time:	1100	Background:	Sky	
Observation End Time:	1200	Sky Conditions:	clear	
Observer's Position:	S.B.S	Wind Speed:	10	
Distance to source:	220 yards	Wind Direction:	SW	
Direction to source:	NE	Ambient Temp:	36	
		Relative Humidity%:	62%	
Height of source:	157'	Wet Bulb Temp:	—	—
Vertical angle to source:	1.5°			

Plume Type: (Attached) Detached None

North Stack

Comments	0	15	30	45			0	15	30	45	Comments
	0	0	0	0	0	30	0	0	0	0	
	0	0	0	0	1	31	0	0	0	0	
	0	0	0	0	2	32	0	0	0	0	
	0	0	0	0	3	33	0	0	0	0	Hmc-m
	0	0	0	0	4	34	20	20	15	10	Yellow
	0	0	0	0	5	35	5	5	0	0	
	0	0	0	0	6	36	0	0	0	0	Blow-m
	0	0	0	0	7	37	0	0	0	0	
	0	0	0	0	8	38	0	0	0	0	
	0	0	0	0	9	39	0	0	0	0	
SC-m 48240	0	0	0	0	10	40	0	0	0	0	
	0	0	0	0	11	41	0	0	0	0	
	0	0	0	0	12	42	0	0	0	0	
	0	0	0	0	13	43	0	0	0	0	
	0	0	0	0	14	44	0	0	0	0	
	0	0	0	0	15	45	0	0	0	0	
	0	0	0	0	16	46	0	0	0	0	
	0	0	0	0	17	47	0	0	0	0	
	0	0	0	0	18	48	0	0	0	0	
	0	0	0	0	19	49	0	0	0	0	
	0	0	0	0	20	50	0	0	0	0	
	0	0	0	0	21	51	0	0	0	0	
	0	0	0	0	22	52	0	0	0	0	
	0	0	0	0	23	53	0	0	0	0	
	0	0	0	0	24	54	0	0	0	0	
	0	0	0	0	25	55	0	0	0	0	
	0	0	0	0	26	56	0	0	0	0	
	0	0	0	0	27	57	0	0	0	0	TP-m
	0	0	0	0	28	58	0	0	0	0	
	0	0	0	0	29	59	0	0	0	0	

Additional info (include steam dissipation point)

Observer's Signature: Jon Simpson

20071107 Method 9 Inspection Form.doc

OCS Environmental, Inc.
Method 9 Source Layout Sketch

Date: 11/30/07

Observer Name: Jon Simpson

Begin Time: 1000

Time End: 1200

No Sun Visible Times

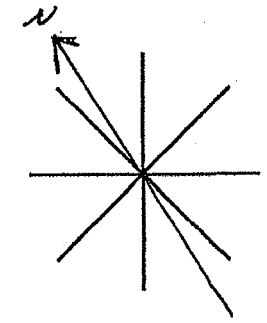

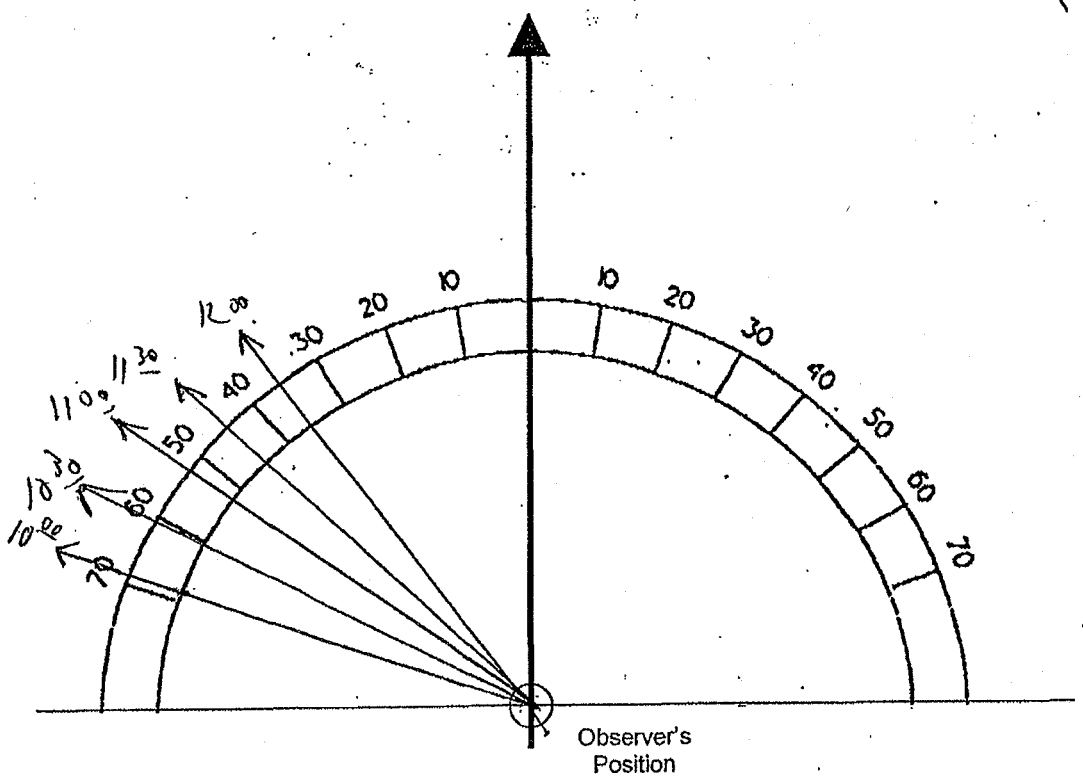

Signature: Jon Simpson

20071107 Method 9 Source Layout Sketch.doc

80-10

OCS Environmental, Inc.

U.S. Steel Gary Works
Emissions Inspection Summary

Date: 11/12/07

Start Time: 0700 (AM) / PM

End Time: 0900 (AM) / PM

No. 2 Precarbon ESP

(BOP)	Roof Monitor		Gas Cleaners	
QBOP	Roof Monitor		(Gas Cleaners)	
Blast Furnace	4	6	8	14
Blast Furnace Top	4	6	8	14

The following events or operations contributed to significant emissions:

Time	Heat/Cast Number	Operation	Comments
North STACK IN Compliance			
South STACK IN Compliance			

20071107 Inspection Summary.doc

OCS Environmental, Inc.
Method 9 VE Inspection Form

Page 1 of 1

			Start	End
Date:	11-12-07			
Source:	#1 Bop North stack	Emissions color:	As Noted	Same
Observation Start Time:	0700	Background:	Sky	
Observation End Time:	0759	Sky Conditions:	Overcast	
Observer's Position:	SPG	Wind Speed:	8	
Distance to source:	350yds	Wind Direction:	SW	
Direction to source:	NE	Ambient Temp:	55°	
		Relative Humidity%:	98	
Height of source:	157'	Wet Bulb Temp:	—	
Vertical angle to source:	6°			

Plume Type: (Attached) Detached None

Comments	0	15	30	45			0	15	30	45	Comments
North STACK	0	0	0	0	0	30	0	0	0	0	North STACK
	0	0	0	0	1	31	0	0	0	0	
	0	0	0	0	2	32	0	0	0	0	
	0	0	0	0	3	33	0	0	0	0	
	0	0	0	0	4	34	0	0	0	0	
	0	0	0	0	5	35	0	0	0	0	
	0	0	0	0	6	36	0	0	0	0	
	0	0	0	0	7	37	0	0	0	0	
	0	0	0	0	8	38	0	0	0	0	
	0	0	0	0	9	39	0	0	0	0	
	0	0	0	0	10	40	0	0	0	0	
	0	0	0	0	11	41	0	0	0	0	
	0	0	0	0	12	42	0	0	0	0	
	0	0	0	0	13	43	0	0	0	0	
	0	0	0	0	14	44	0	0	0	0	
	0	0	0	0	15	45	0	0	0	0	
	0	0	0	0	16	46	0	0	0	0	
	0	0	0	0	17	47	0	0	0	0	
	0	0	0	0	18	48	0	0	0	0	
	0	0	0	0	19	49	0	0	0	0	
	0	0	0	0	20	50	0	0	0	0	
	0	0	0	0	21	51	0	0	0	0	
	0	0	0	0	22	52	0	0	0	0	
	0	0	0	0	23	53	0	0	0	0	
	0	0	0	0	24	54	0	0	0	0	
	0	0	0	0	25	55	0	0	0	0	
	0	0	0	0	26	56	0	0	0	0	
	0	0	0	0	27	57	0	0	0	0	
	0	0	0	0	28	58	0	0	0	0	
	0	0	0	0	29	59	0	0	0	0	

Additional info (include steam dissipation point)

Observer's Signature: Kevin Davis

20071107 Method 9 Inspection Form.doc

OCS Environmental, Inc.
Method 9 VE Inspection Form

Page 1 of 1

			Start	End
Date:	11-12-07			
Source:	#1 Bop Shop South Stack	Emissions color:	As Noted	Same
Observation Start Time:	0800	Background:	Sky	
Observation End Time:	0859	Sky Conditions:	Overcast	
Observer's Position:	SP9	Wind Speed:	8	
Distance to source:	350 yds	Wind Direction:	SW	
Direction to source:	NE	Ambient Temp:	55°	
		Relative Humidity%:	98	
Height of source:	157'	Wet Bulb Temp:	–	
Vertical angle to source:	6°			

Plume Type: Attached Detached None

Comments	0	15	30	45			0	15	30	45	Comments
South Stack	0	0	0	0	0	30	0	0	0	0	South Stack
	0	0	0	0	1	31	0	0	0	0	
	0	0	0	0	2	32	0	0	0	0	
	0	0	0	0	3	33	0	0	0	0	
	0	0	0	0	4	34	0	0	0	0	
	0	0	0	0	5	35	0	0	0	0	
	0	0	0	0	6	36	0	0	0	0	
	0	0	0	0	7	37	0	0	0	0	
	0	0	0	0	8	38	0	0	0	0	
	0	0	0	0	9	39	0	0	0	0	
	0	0	0	0	10	40	0	0	0	0	
	0	0	0	0	11	41	0	0	0	0	
	0	0	0	0	12	42	0	0	0	0	
	0	0	0	0	13	43	0	0	0	0	
	0	0	0	0	14	44	0	0	0	0	
	0	0	0	0	15	45	0	0	0	0	
	0	0	0	0	16	46	0	0	0	0	
	0	0	0	0	17	47	0	0	0	0	
	0	0	0	0	18	48	0	0	0	0	
	0	0	0	0	19	49	0	0	0	0	
	0	0	0	0	20	50	0	0	0	0	
	0	0	0	0	21	51	0	0	0	0	
	0	0	0	0	22	52	0	0	0	0	
	0	0	0	0	23	53	0	0	0	0	
	0	0	0	0	24	54	0	0	0	0	
	0	0	0	0	25	55	0	0	0	0	
	0	0	0	0	26	56	0	0	0	0	
	0	0	0	0	27	57	0	0	0	0	
	0	0	0	0	28	58	0	0	0	0	
	0	0	0	0	29	59	0	0	0	0	

Additional info (include steam dissipation point)

Observer's Signature: Kevin Davis

20071107 Method 9 Inspection Form.doc

OCS Environmental, Inc.
Method 9 Source Layout Sketch

Date: 11 / 12 / 07

Observer Name: K. Davis

Begin Time: 0700 Time End: 0900

No Sun Visible Times
0700
0730
0800
0830

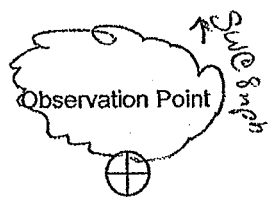

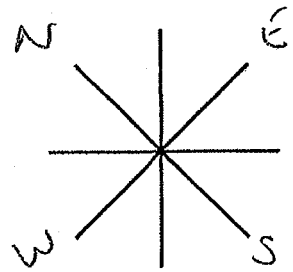

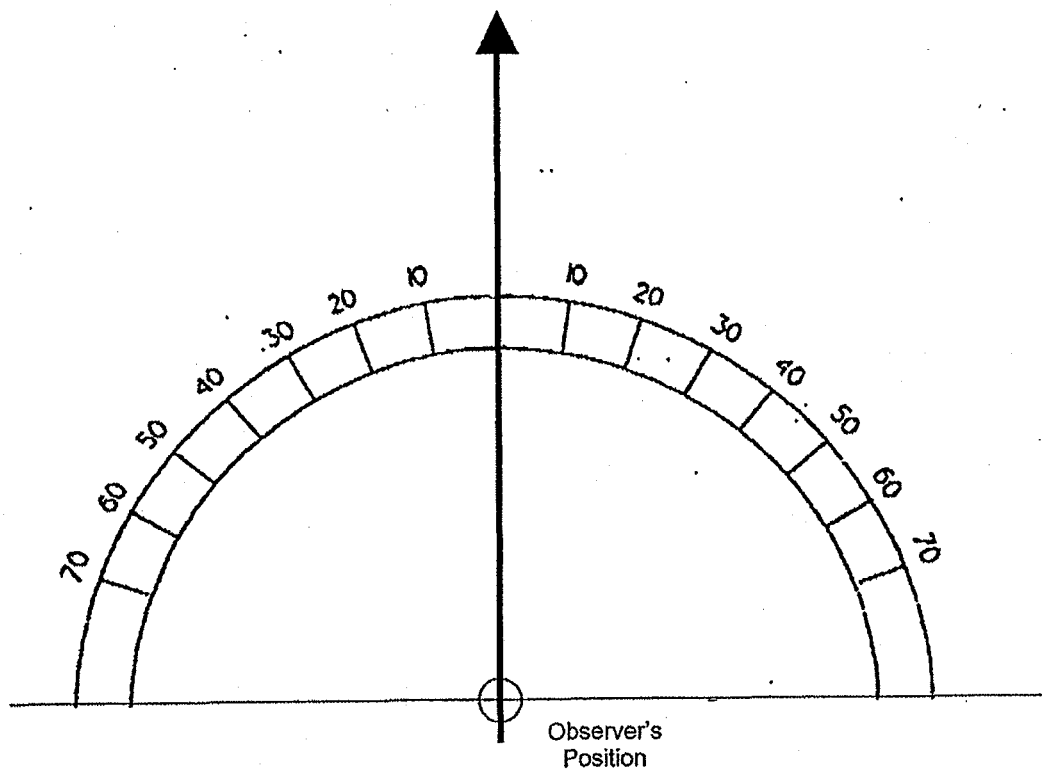

Signature: Kevin Davis

20071107 Method 9 Source Layout Sketch.doc

V-11

OCS Environmental, Inc.

U.S. Steel Gary Works
Emissions Inspection Summary

Date: 11,21,07

Start Time: 0710 AM / PM

End Time: 0910 AM / PM

No. 2 Precarbon ESP

BOP	Roof Monitor		Gas Cleaners	
QBOP	Roof Monitor		Gas Cleaners	
Blast Furnace	4	6	8	14
Blast Furnace Top	4	6	8	14

The following events or operations contributed to significant emissions:

Time	Heat/Cast Number	Operation	Comments

20071107 Inspection Summary.doc

OCS Environmental, Inc.
Method 9 VE Inspection Form

Page 1 of 2

			Start	End
Date:	11/21/07	Emissions color:	As noted	Same
Source:	1 Bop 6CV	Background:	sky	
Observation Start Time:	0710	Sky Conditions:	cloudy	
Observation End Time:	0810	Wind Speed:	9	
Observer's Position:	SPS	Wind Direction:	NE	
Distance to source:	220	Ambient Temp:	43	
Direction to source:	NE	Relative Humidity%:	100	
		Wet Bulb Temp:		
Height of source:	157			
Vertical angle to source:	15°			

Plume Type: Attached Detached None

Comments	0	15	30	45			0	15	30	45	Comments
North stack	0	0	0	0	0	30	0	0	0	0	
	0	0	0	0	1	31	0	0	0	0	
	0	0	0	0	2	32	0	0	0	0	
	0	0	0	0	3	33	0	0	0	0	
	0	0	0	0	4	34	0	0	0	0	
	0	0	0	0	5	35	0	0	0	0	
	0	0	0	0	6	36	0	0	0	0	
	0	0	0	0	7	37	0	0	0	0	
	0	0	0	0	8	38	0	0	0	0	
	0	0	0	0	9	39	0	0	0	0	
	0	0	0	0	10	40	0	0	0	0	
	0	0	0	0	11	41	0	0	0	0	
	0	0	0	0	12	42	0	0	0	0	
	0	0	0	0	13	43	0	0	0	0	
	0	0	0	0	14	44	0	0	0	0	
	0	0	0	0	15	45	0	0	0	0	
	0	0	0	0	16	46	0	0	0	0	
	0	0	0	0	17	47	0	0	0	0	
	0	0	0	0	18	48	0	0	0	0	
	0	0	0	0	19	49	0	0	0	0	
	0	0	0	0	20	50	0	0	0	0	
	0	0	0	0	21	51	0	0	0	0	
	0	0	0	0	22	52	0	0	0	0	
	0	0	0	0	23	53	0	0	0	0	
	0	0	0	0	24	54	0	0	0	0	
	0	0	0	0	25	55	0	0	0	0	
	0	0	0	0	26	56	0	0	0	0	
	0	0	0	0	27	57	0	0	0	0	
	0	0	0	0	28	58	0	0	0	0	
	0	0	0	0	29	59	0	0	0	0	

Additional info (include steam dissipation point)

Observer's Signature

Clarence Patterson

20071107 Method 9 Inspection Form.doc

OCS Environmental, Inc.
Method 9 VE Inspection Form

Page 2 of 2

			Start	End
Date:	11/21/07	Emissions color:	A-mated	Same
Source:	1Bop GCS	Background:	SKY	
Observation Start Time:	0810	Sky Conditions:	Cloudy	
Observation End Time:	0910	Wind Speed:	9	
Observer's Position:	SPS	Wind Direction:	NE	
Distance to source:	220	Ambient Temp:	43	
Direction to source:	NE	Relative Humidity%:	100	
Height of source:	157	Wet Bulb Temp:		
Vertical angle to source:	15°			

Plume Type: Attached Detached None

Comments	0	15	30	45			0	15	30	45	Comments
South stack	0	0	0	0	0	30	0	0	0	0	
	0	0	0	0	1	31	0	0	0	0	
	0	0	0	0	2	32	0	0	0	0	
	0	0	0	0	3	33	0	0	0	0	
	0	0	0	0	4	34	0	0	0	0	
	0	0	0	0	5	35	0	0	0	0	
	0	0	0	0	6	36	0	0	0	0	
	0	0	0	0	7	37	0	0	0	0	
	0	0	0	0	8	38	0	0	0	0	
	0	0	0	0	9	39	0	0	0	0	
	0	0	0	0	10	40	0	0	0	0	
	0	0	0	0	11	41	0	0	0	0	
	0	0	0	0	12	42	0	0	0	0	
	0	0	0	0	13	43	0	0	0	0	
	0	0	0	0	14	44	0	0	0	0	
	0	0	0	0	15	45	0	0	0	0	
	0	0	0	0	16	46	0	0	0	0	
	0	0	0	0	17	47	0	0	0	0	
	0	0	0	0	18	48	0	0	0	0	
	0	0	0	0	19	49	0	0	0	0	
	0	0	0	0	20	50	0	0	0	0	
	0	0	0	0	21	51	0	0	0	0	
	0	0	0	0	22	52	0	0	0	0	
	0	0	0	0	23	53	0	0	0	0	
	0	0	0	0	24	54	0	0	0	0	
	0	0	0	0	25	55	0	0	0	0	
	0	0	0	0	26	56	0	0	0	0	
	0	0	0	0	27	57	0	0	0	0	
	0	0	0	0	28	58	0	0	0	0	
	0	0	0	0	29	59	0	0	0	0	

Additional Info (include steam dissipation point)

Observer's Signature: Clarence Patterson

20071107 Method 9 Inspection Form.doc

OCS Environmental, Inc.
Method 9 Source Layout Sketch

Date: 11/2/07

Observer Name: Clarence Patterson

Begin Time: 0710 Time End: 0910

No Sun Visible Times
0710
0740
0810
0840

Observation Point

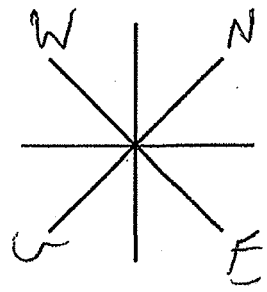

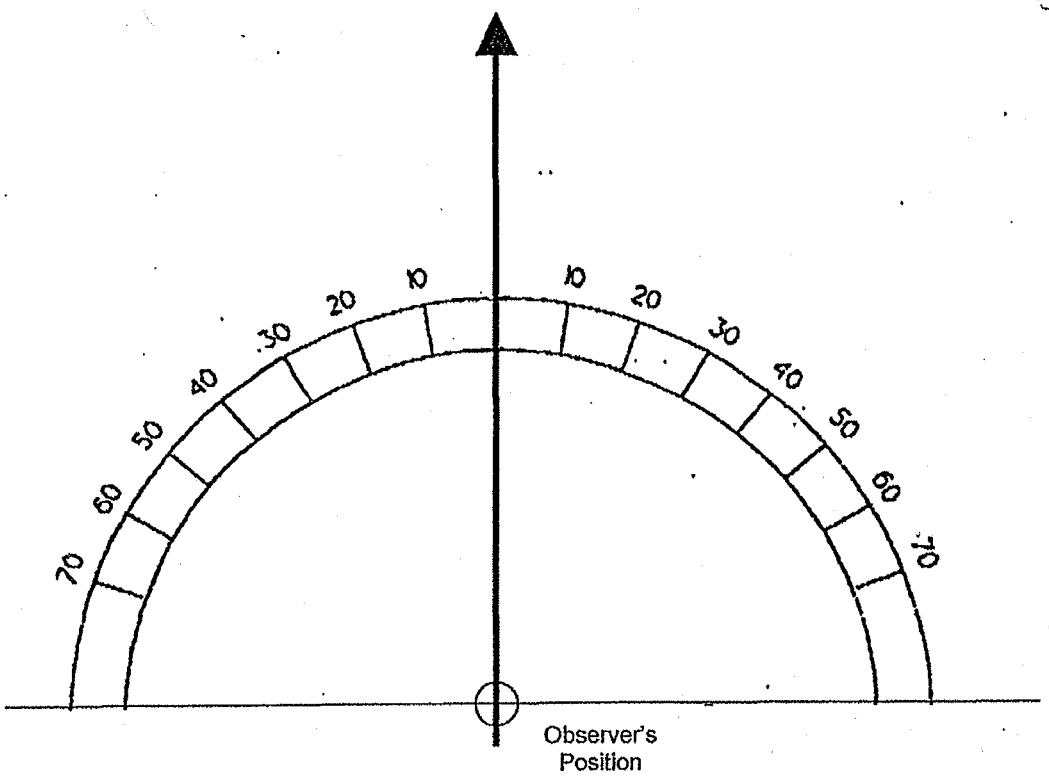

Signature: Clarence Patterson

20071107 Method 9 Source Layout Sketch.doc

8-12

OCS Environmental, Inc.

U.S. Steel Gary Works
Emissions Inspection Summary

Date: 12/5/07

Start Time: 0930 AM / PM

End Time: 0930 AM / PM

No. 2 Precarbon ESP

BOP	Roof Monitor		Gas Cleaners	
QBOP	Roof Monitor		Gas Cleaners	
Blast Furnace	4	6	8	14
Blast Furnace Top	4	6	8	14

The following events or operations contributed to significant emissions:

Time	Heat/Cast Number	Operation	Comments

20071107 Inspection Summary.doc

OCS Environmental, Inc.
Method 9 VE Inspection Form

Date: 12/5/07
Source: 1Bop Gcw
Observation Start Time: 0730
Observation End Time: 0830
Observer's Position: SPS
Distance to source: 220
Direction to source: NW

Height of source: 157
Vertical angle to source: 15

	Start	End
Emissions color:	As noted	Same
Background:	sky	
Sky Conditions:	cloudy	
Wind Speed:	10	
Wind Direction:	NE	
Ambient Temp:	30	
Relative Humidity%:	90	
Wet Bulb Temp:		

Plume Type: Attached Detached None

Comments	0	15	30	45			0	15	30	45	Comments
North stack	0	0	0	0	0	30	0	0	0	0	
	0	0	0	0	1	31	0	0	0	0	
	0	0	0	0	2	32	0	0	0	0	
	0	0	0	0	3	33	0	0	0	0	
	0	0	0	0	4	34	0	0	0	0	
	0	0	0	0	5	35	0	0	0	0	
	0	0	0	0	6	36	0	0	0	0	
	0	0	0	0	7	37	0	0	0	0	
	0	0	0	0	8	38	0	0	0	0	
	0	0	0	0	9	39	0	0	0	0	
	0	0	0	0	10	40	0	0	0	0	
	0	0	0	0	11	41	0	0	0	0	
	0	0	0	0	12	42	0	0	0	0	
	0	0	0	0	13	43	0	0	0	0	
	0	0	0	0	14	44	0	0	0	0	
	0	0	0	0	15	45	0	0	0	0	
	0	0	0	0	16	46	0	0	0	0	
	0	0	0	0	17	47	0	0	0	0	
	0	0	0	0	18	48	0	0	0	0	
	0	0	0	0	19	49	0	0	0	0	
	0	0	0	0	20	50	0	0	0	0	
	0	0	0	0	21	51	0	0	0	0	
	0	0	0	0	22	52	0	0	0	0	
	0	0	0	0	23	53	0	0	0	0	
	0	0	0	0	24	54	0	0	0	0	
	0	0	0	0	25	55	0	0	0	0	
	0	0	0	0	26	56	0	0	0	0	
	0	0	0	0	27	57	0	0	0	0	
	0	0	0	0	28	58	0	0	0	0	
	0	0	0	0	29	59	0	0	0	0	

Additional info (include steam dissipation point)

Observer's Signature: Lorence Patterson

OCS Environmental, Inc.
Method 9 VE Inspection Form

Date: 12/5/07
Source: 1 Bop Gas
Observation Start Time: 0830
Observation End Time: 0930
Observer's Position: SPS
Distance to source: 220
Direction to source: NW

Height of source: 157
Vertical angle to source: 15

	Start	End
Emissions color:	Ar noted	same
Background:	sky	
Sky Conditions:	cloudy	
Wind Speed:	10	
Wind Direction:	NE	
Ambient Temp:	30	
Relative Humidity%:	90	
Wet Bulb Temp:		

Plume Type: (Attached) Detached None

Comments	0	15	30	45			0	15	30	45	Comments
	0	0	0	0	0	30	0	0	0	0	
	0	0	0	0	1	31	0	0	0	0	
	0	0	0	0	2	32	0	0	0	0	
	0	0	0	0	3	33	0	0	0	0	
	0	0	0	0	4	34	0	0	0	0	
	0	0	0	0	5	35	0	0	0	0	
	0	0	0	0	6	36	0	0	0	0	
	0	0	0	0	7	37	0	0	0	0	
	0	0	0	0	8	38	0	0	0	0	
	0	0	0	0	9	39	0	0	0	0	
	0	0	0	0	10	40	0	0	0	0	
	0	0	0	0	11	41	0	0	0	0	
	0	0	0	0	12	42	0	0	0	0	
	0	0	0	0	13	43	0	0	0	0	
	0	0	0	0	14	44	0	0	0	0	
	0	0	0	0	15	45	0	0	0	0	
	0	0	0	0	16	46	0	0	0	0	
	0	0	0	0	17	47	0	0	0	0	
	0	0	0	0	18	48	0	0	0	0	
	0	0	0	0	19	49	0	0	0	0	
	0	0	0	0	20	50	0	0	0	0	
	0	0	0	0	21	51	0	0	0	0	
	0	0	0	0	22	52	0	0	0	0	
	0	0	0	0	23	53	0	0	0	0	
	0	0	0	0	24	54	0	0	0	0	
	0	0	0	0	25	55	0	0	0	0	
	0	0	0	0	26	56	0	0	0	0	
	0	0	0	0	27	57	0	0	0	0	
	0	0	0	0	28	58	0	0	0	0	
	0	0	0	0	29	59	0	0	0	0	

Additional info (include steam dissipation point)

Observer's Signature: Vaverne Patterson

20071107 Method 9 Inspection Form.doc

OCS Environmental, Inc.
Method 9 Source Layout Sketch

Date: 12 / 5 / 07

Observer Name: Clarence Patterson

Begin Time: 0730 Time End: 0930

No Sun Visible Times
0730
0800
0830
0900

Observation Point

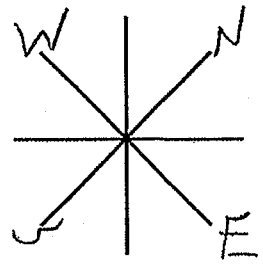

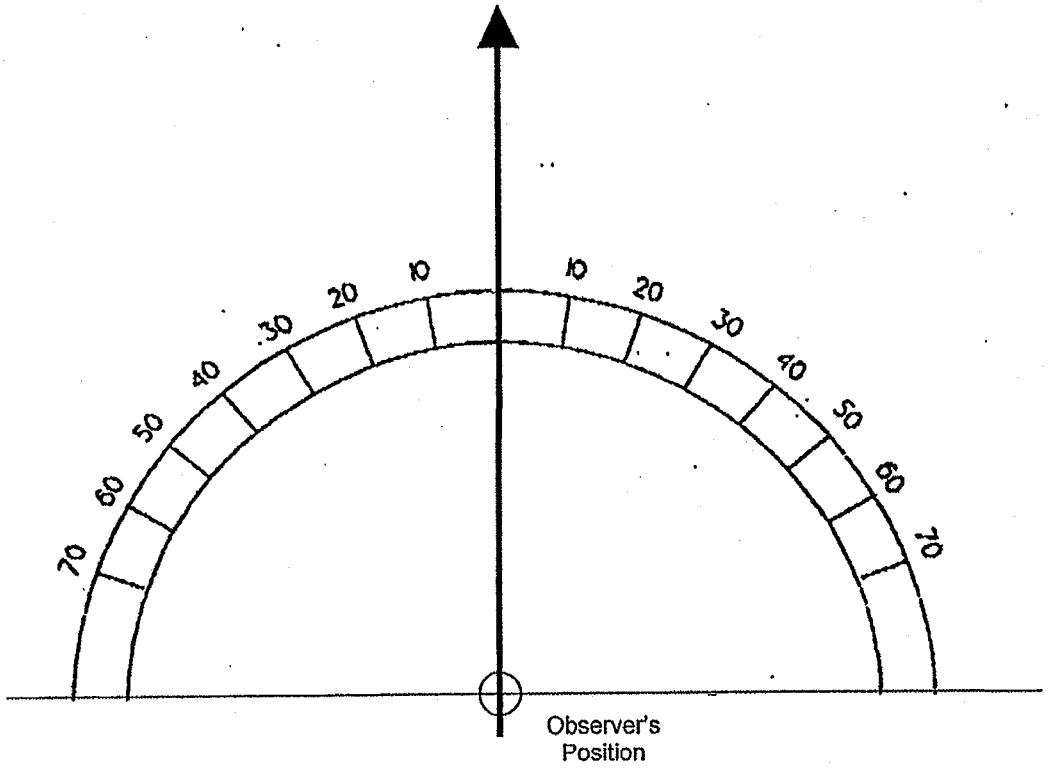

Signature: Clarence Patterson

20071107 Method 9 Source Layout Sketch.doc

12-2

OCS Environmental, Inc.

U.S. Steel Gary Works
Emissions Inspection Summary

Date: 11/20/07

Start Time: 1150 AM / PM

End Time: 1512 AM / PM

No. 2 Precarbon ESP

BOP	Roof Monitor		Gas Cleaners	
QBOP	Roof Monitor		Gas Cleaners	Skimmer
Blast Furnace	4	6	8	14
Blast Furnace Top	4	6	8	14

The following events or operations contributed to significant emissions:

Time	Heat/Cast Number	Operation	Comments

20071107 Inspection Summary.doc

OCS Environmental, Inc.
Method 9 VE Inspection Form

			Start	End
Date:	11-20-07			
Source:	@ BOP SLAG SKIMMIN	Emissions color:	AS NOTED	SAME
Observation Start Time:	1150	Background:	SKY	
Observation End Time:	1153	Sky Conditions:	OVERCAST	
Observer's Position:	SW6	Wind Speed:	3	
Distance to source:	225 yds	Wind Direction:	NE	
Direction to source:	NW 10°	Ambient Temp:	47°	
		Relative Humidity%:	96%	
Height of source:	N/A	Wet Bulb Temp:	N/A	
Vertical angle to source:	N/A			

Plume Type: Attached Detached None

Comments	0	15	30	45			0	15	30	45	Comments
					0	30					
					1	31					
					2	32					
					3	33					
					4	34					
					5	35					
					6	36					
					7	37					
					8	38					
					9	39					
					10	40					
					11	41					
					12	42					
					13	43					
					14	44					
					15	45					
					16	46					
					17	47					
					18	48					
					19	49					
					20	50	0	0	0	0	start SKimmING 11:50
					21	51	0	0	0	0	
					22	52	0	0	0	0	11:53° FINISHED
					23	53					
					24	54					
					25	55					
					26	56					
					27	57					
					28	58					
					29	59					

Additional info (include steam dissipation point)

Observer's Signature

20071107 Method 9 Inspection Form.doc

OCS Environmental, Inc.
Method 9 VE Inspection Form

			Start	End
Date:	11-20-07	Emissions color:	As noted	Same
Source:	Q Bop Slag Skimmer	Background:	Sky	
Observation Start Time:	12:19	Sky Conditions:	Overcast	
Observation End Time:	12:22	Wind Speed:	3	
Observer's Position:	SP6	Wind Direction:	NE	
Distance to source:	225 Yds	Ambient Temp:	47	
Direction to source:	NW 10'	Relative Humidity%:	96%	
Height of source:	N/A	Wet Bulb Temp:	N/A	
Vertical angle to source:	N/A			

Plume Type: Attached Detached None

Comments	0	15	30	45			0	15	30	45	Comments
					0	30					
					1	31					
					2	32					
					3	33					
					4	34					
					5	35					
					6	36					
					7	37					
					8	38					
					9	39					
					10	40					
					11	41					
					12	42					
					13	43					
					14	44					
					15	45					
					16	46					
					17	47					
					18	48					
Start 12:19:			0	0	19	49					
	0	0	0	0	20	50					
	0	0	0	0	21	51					
12:22 Finish	0				22	52					
					23	53					
					24	54					
					25	55					
					26	56					
					27	57					
					28	58					
					29	59					

Additional info (include steam dissipation point)

Observer's Signature: [signature]

OCS Environmental, Inc.
Method 9 VE Inspection Form

			Start	End
Date:	11-20-07			
Source:	BOP Slag skimmer	Emissions color:	As noted	Same
Observation Start Time:	13:23	Background:	Sky	
Observation End Time:	13:25	Sky Conditions:	Overcast	
Observer's Position:	SPL	Wind Speed:	3	
Distance to source:	225 yds	Wind Direction:	NE	
Direction to source:	NW 10°	Ambient Temp:	47°	
		Relative Humidity%:	96%	
Height of source:	N/A	Wet Bulb Temp:	N/A	
Vertical angle to source:	N/A			

Plume Type: Attached Detached None

Comments	0	15	30	45			0	15	30	45	Comments
					0	30					
					1	31					
					2	32					
					3	33					
					4	34					
					5	35					
					6	36					
					7	37					
					8	38					
					9	39					
					10	40					
					11	41					
					12	42					
					13	43					
					14	44					
					15	45					
					16	46					
					17	47					
					18	48					
					19	49					
					20	50					
					21	51					
					22	52					
S- 13:23	0	0	0	0	23	53					
	0	0	0	0	24	54					
F- 13:25:35	0	0	0		25	55					
					26	56					
					27	57					
					28	58					
					29	59					

Additional info (include steam dissipation point)

Observer's Signature

OCS Environmental, Inc.
Method 9 VE Inspection Form

			Start	End
Date:	11-20-07	Emissions color:	AS NOTED	SAME
Source:	Q Bop Slag Skimmer	Background:	SKY	
Observation Start Time:	1509	Sky Conditions:	OVERCAST	
Observation End Time:	1517	Wind Speed:	3	
Observer's Position:	SPG	Wind Direction:	NE	
Distance to source:	225 yds	Ambient Temp:	47°	
Direction to source:	NW 10°	Relative Humidity%:	96%	
		Wet Bulb Temp:	N/A	
Height of source:	N/A			
Vertical angle to source:	N/A			

Plume Type: Attached Detached None

Comments	0	15	30	45			0	15	30	45	Comments
					0	30					
					1	31					
					2	32					
					3	33					
					4	34					
					5	35					
					6	36					
					7	37					
					8	38					
S-15:09	0	0	0	0	9	39					
	0	0	0	0	10	40					
	0	0	0	0	11	41					
F-15:12	0	0	0		12	42					
					13	43					
					14	44					
					15	45					
					16	46					
					17	47					
					18	48					
					19	49					
					20	50					
					21	51					
					22	52					
					23	53					
					24	54					
					25	55					
					26	56					
					27	57					
					28	58					
					29	59					

Additional info (include steam dissipation point)

Observer's Signature

20071107 Method 9 Inspection Form.doc

OCS Environmental, Inc.
Method 9 Source Layout Sketch

Date: 11 / 20 / 07

Observer Name: R. MACKEY

Begin Time: 11:50

Time End: 15:12

No Sun Visible Times
11:50 - 1512

Observation Point

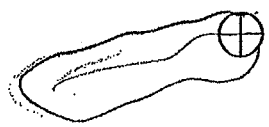

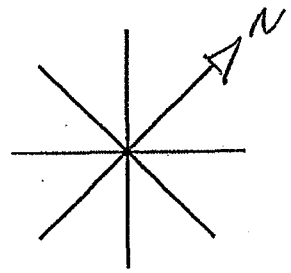

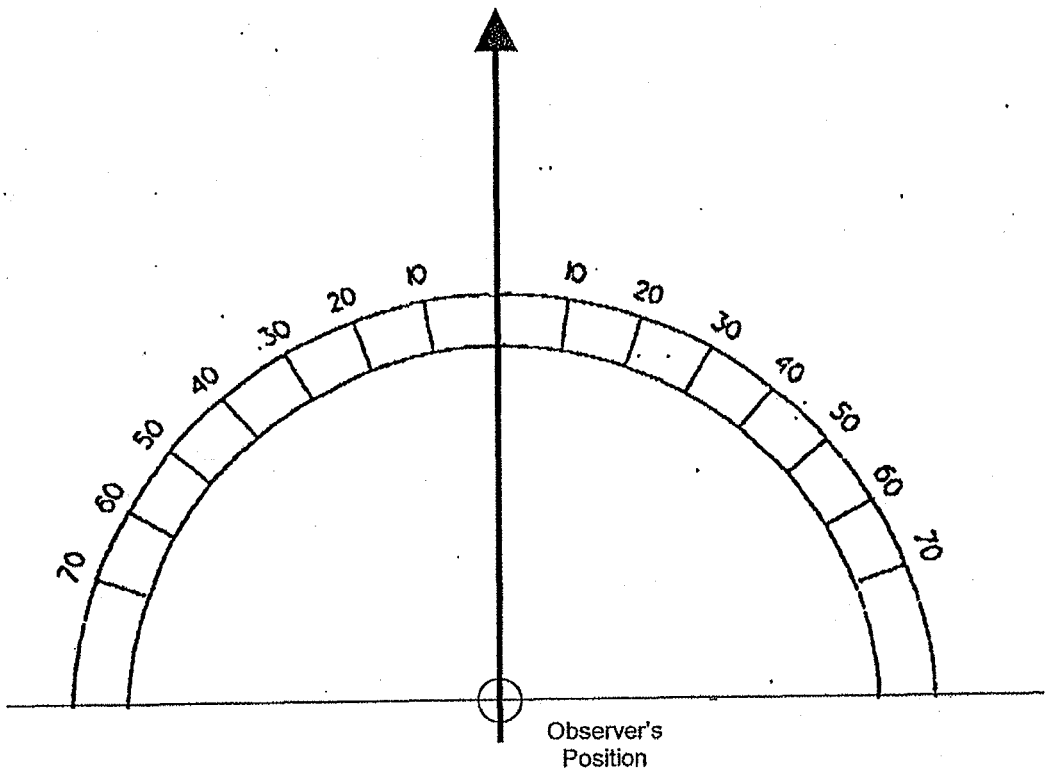

Signature: Rick J Mackey

20071107 Method 9 Source Layout Sketch.doc

12-1

OCS Environmental, Inc.

U.S. Steel Gary Works
Emissions Inspection Summary

Date: 11/29/07

Start Time: 0700 AM / PM

End Time: 1101 AM / PM

No. 2 Precarbon ESP

BOP	Roof Monitor		Gas Cleaners	
QBOP	Roof Monitor		Gas Cleaners	SLAG SKIMMING
Blast Furnace	4	6	8	14
Blast Furnace Top	4	6	8	14

The following events or operations contributed to significant emissions:

Time	Heat/Cast Number	Operation	Comments
	Watching skimmer	No emissions	

20071107 Inspection Summary.doc

OCS Environmental, Inc.
Method 9 VE Inspection Form

Page 1 of 5

			Start	End
Date:	11/29/07	Emissions color:	As noted	Same
Source:	North end rm	Background:	sky	
Observation Start Time:	0700	Sky Conditions:	clear	
Observation End Time:	0800	Wind Speed:	15	
Observer's Position:	SE6	Wind Direction:	NW	
Distance to source:	225 yd	Ambient Temp:	19	
Direction to source:	NW	Relative Humidity%:	65%	
		Wet Bulb Temp:		
Height of source:	186			
Vertical angle to source:	13			

Plume Type: (Attached) Detached None

Comments	0	15	30	45			0	15	30	45	Comments
					0	30					
					1	31					
					2	32					
					3	33					
					4	34					
					5	35					
					6	36					
					7	37					
					8	38					
					9	39					
					10	40					
					11	41					
					12	42					
					13	43					
					14	44					
					15	45	0	0	0	0	Begin skim
					16	46	0	0	0	0	
					17	47	0	0	0	0	
					18	48	0	0	0	0	
					19	49	0	0	0	0	
					20	50	0	0	0	0	
					21	51	0	0	0	0	end skim
					22	52					
					23	53					
					24	54					
					25	55					
					26	56					
					27	57					
					28	58					
					29	59					

Additional info (include steam dissipation point)

Observer's Signature: Dawne Patterson

20071107 Method 9 Inspection Form.doc

OCS Environmental, Inc.
Method 9 VE Inspection Form

Date: 11/29/07
Source: North end cm
Observation Start Time: 0800
Observation End Time: 0900
Observer's Position: SE6
Distance to source: 225 yds
Direction to source: NW

Height of source: 186
Vertical angle to source: 13

	Start	End
Emissions color:	As noted	Same
Background:	sky	
Sky Conditions:	clear	
Wind Speed:	15	
Wind Direction:	NW	
Ambient Temp:	19	
Relative Humidity%:	65%	
Wet Bulb Temp:		

Plume Type: (Attached) Detached None

Comments	0	15	30	45			0	15	30	45	Comments
					0	30					
					1	31					
					2	32					
					3	33	0	0	0	0	Begin Skim
					4	34	0	0	0	0	
					5	35	0	0	0	0	
					6	36	0	0	0	0	
					7	37	0	0	0	0	
					8	38	0	0	0	0	
					9	39	0	0	0	0	
					10	40	0	0	0	0	
					11	41	0	0	0	0	
					12	42	0	0	0	0	
					13	43	0	0	0	0	
					14	44	0	0	0	0	
					15	45	0	0	0	0	
					16	46	0	0	0	0	
					17	47	0	0	0	0	End skim
					18	48					
					19	49					
					20	50					
					21	51					
					22	52					
					23	53					
					24	54					
					25	55					
					26	56					
					27	57					
					28	58					
					29	59					

Additional Info (Include steam dissipation point)

Observer's Signature: Vanessa Patterson

20071107 Method 9 Inspection Form.doc

OCS Environmental, Inc.
Method 9 VE Inspection Form

Page 3 of 5

Date: 11/29/07
Source: North end cm
Observation Start Time: 0900
Observation End Time: 1000
Observer's Position: up 6
Distance to source: 225 yds
Direction to source: NW

Height of source: 136
Vertical angle to source: 13

	Start	End
Emissions color:	Air noted	None
Background:	sky	
Sky Conditions:	Clear	
Wind Speed:	15	
Wind Direction:	NW	
Ambient Temp:	19	
Relative Humidity%:	65%	
Wet Bulb Temp:		

Plume Type: (Attached) Detached None

Comments	0	15	30	45			0	15	30	45	Comments
					0	30					
					1	31					
					2	32					
					3	33					
					4	34					
					5	35					
					6	36					
					7	37					
					8	38					
					9	39					
					10	40					
					11	41					
					12	42					
					13	43					
					14	44					
					15	45					
					16	46					
					17	47					
					18	48					
					19	49					
					20	50					
					21	51					
					22	52					
					23	53					
					24	54					
					25	55					
					26	56					
					27	57					
					28	58	0	0	0	0	Begin skim
					29	59	0	0	0	0	

Additional Info (Include steam dissipation point)

Observer's Signature: Lourene Patterson

20071107 Method 9 Inspection Form.doc

OCS Environmental, Inc.
Method 9 VE Inspection Form

Page 4 of 5

			Start	End
Date:	11/29/07	Emissions color:	As noted	same
Source:	North end DM	Background:	sky	
Observation Start Time:	1000	Sky Conditions:	Clear	
Observation End Time:	1100	Wind Speed:	15	
Observer's Position:	SP6	Wind Direction:	NW	
Distance to source:	225 yds	Ambient Temp:	19	
Direction to source:	NW	Relative Humidity%:	65%	
Height of source:	186	Wet Bulb Temp:		
Vertical angle to source:	13			

Plume Type: Attached Detached None

Comments	0	15	30	45			0	15	30	45	Comments
	0	0	0	0	0	30					
	0	0	0	0	1	31					
	0	0	0	0	2	32					
	0	0	0	0	3	33					
	0	0	0	0	4	34					
	0	0	0	0	5	35					
	0	0	0	0	6	36					
	0	0	0	0	7	37					
End skim	0	0	0	0	8	38					
					9	39					
					10	40					
					11	41					
					12	42					
					13	43					
					14	44					
					15	45					
					16	46					
					17	47					
					18	48					
					19	49					
					20	50					
					21	51					
					22	52					
					23	53					
					24	54					
					25	55					
					26	56	0	0	0	0	Begin skim
					27	57	0	0	0	0	
					28	58	0	0	0	0	
					29	59	0	0	0	0	

Additional info (include steam dissipation point)

Observer's Signature

Clarence Patterson

20071107 Method 9 Inspection Form.doc

OCS Environmental, Inc.
Method 9 VE Inspection Form

Page 5 of 5

			Start	End
Date:	11/27/07	Emissions color:	Aerated	same
Source:	North end RM	Background:	sky	
Observation Start Time:	1100	Sky Conditions:	clear	
Observation End Time:	1200	Wind Speed:	15	
Observer's Position:	up6	Wind Direction:	NW	
Distance to source:	225 yds	Ambient Temp:	19	
Direction to source:	NW	Relative Humidity%:	65%	
		Wet Bulb Temp:		
Height of source:	186			
Vertical angle to source:	13			

Plume Type: (Attached) Detached None

Comments	0	15	30	45			0	15	30	45	Comments
	0	0	0	0	0	30					
end skim	0	0	0	0	1	31					
					2	32					
					3	33					
					4	34					
					5	35					
					6	36					
					7	37					
					8	38					
					9	39					
					10	40					
					11	41					
					12	42					
					13	43					
					14	44					
					15	45					
					16	46					
					17	47					
					18	48					
					19	49					
					20	50					
					21	51					
					22	52					
					23	53					
					24	54					
					25	55					
					26	56					
					27	57					
					28	58					
					29	59					

Additional info (include steam dissipation point)

Observer's Signature: Lorene Patterson

20071107 Method 9 Inspection Form.doc

OCS Environmental, Inc.
Method 9 Source Layout Sketch

Date: 11 / 29 / 07

Observer Name: Vaserie Patterson

Begin Time: 0700 Time End: 1100

No Sun Visible Times

Observation Point

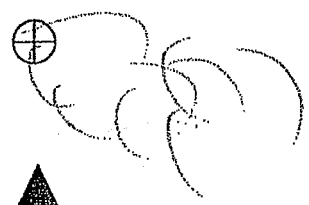

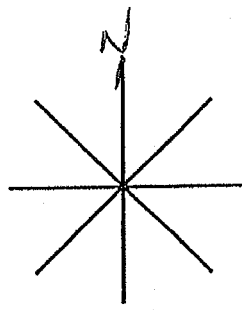

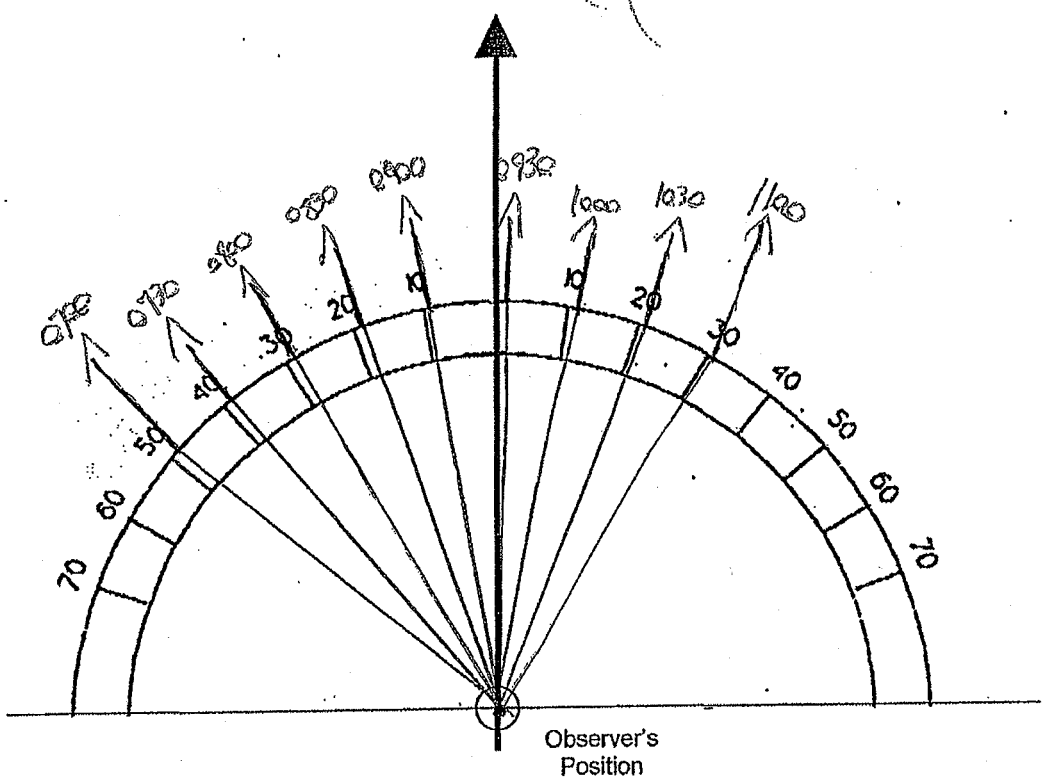

Signature: Vaserie Patterson

20071107 Method 9 Source Layout Sketch.doc

13-1

OCS Environmental, Inc.

U.S. Steel Gary Works
Emissions Inspection Summary

Date: 11/27/07

Start Time: 06:45 AM / PM

End Time: 09:11 AM / PM

No. 2 Precarbon ESP

BOP	Roof Monitor		Gas Cleaners	
QBOP	Roof Monitor		Gas Cleaners	
Blast Furnace	4	6	8	14
Blast Furnace Top	4	6	8	14

The following events or operations contributed to significant emissions:

Time	Heat/Cast Number	Operation	Comments

20071107 Inspection Summary.doc

OCS Environmental, Inc.
Method 9 VE Inspection Form

			Start	End
Date:	11-27-07			
Source:	#1 BOP ROOF MONITOR	Emissions color:	AS NOTED	SAME
Observation Start Time:	06:45:00	Background:	GREY SKY	↓
Observation End Time:	06:59:45	Sky Conditions:	CLOUDY	↓
Observer's Position:	SP1	Wind Speed:	8	↓
Distance to source:	300 YARDS	Wind Direction:	SW	↓
Direction to source:	NW 304°	Ambient Temp:	29	↓
		Relative Humidity%:	89%	↓
Height of source:	185'	Wet Bulb Temp:		↓
Vertical angle to source:	14°			

Plume Type: (Attached) Detached None

Comments	0	15	30	45			0	15	30	45	Comments
					0	30					
					1	31					
					2	32					
					3	33					
					4	34					
					5	35					
					6	36					
					7	37					
					8	38					
					9	39					
					10	40					
					11	41					
					12	42					
					13	43					
					14	44					
					15	45	0	0	0	0	BEGIN
					16	46	0	0	0	0	
					17	47	0	0	0	0	
					18	48	0	0	0	0	
					19	49	0	0	0	0	
					20	50	0	0	0	0	SC D-44481
					21	51	0	0	0	0	
					22	52	0	0	0	0	
					23	53	0	0	0	0	
					24	54	0	0	0	0	
					25	55	0	0	0	0	
					26	56	0	0	0	0	
					27	57	0	0	0	0	
					28	58	0	0	0	0	
					29	59	0	0	0	0	

Additional info (include steam dissipation point)

Observer's Signature

Jim McClure

20071107 Method 9 Inspection Form.doc

OCS Environmental, Inc.
Method 9 VE Inspection Form

Date: 11-27-07
Source: #1 BOP ROOF MONITOR
Observation Start Time: 07:00:00
Observation End Time: 07:59:45
Observer's Position: SP1
Distance to source: 300 YARDS
Direction to source: NW 304°

Height of source: 185'
Vertical angle to source: 14°

	Start	End
Emissions color:	AS NOTED	AS NOTED
Background:	GREY SKY	BLUE SKY
Sky Conditions:	CLOUDY	PARTLY CLOUDY
Wind Speed:	8	8
Wind Direction:	SW	SW
Ambient Temp:	29°	29
Relative Humidity%:	89%	89%
Wet Bulb Temp:	—	

Plume Type: Attached Detached None

Comments	0	15	30	45			0	15	30	45	Comments
	0	0	0	0	0	30	0	0	0	0	
	0	0	0	0	1	31	0	0	0	0	
	0	0	0	0	2	32	0	0	0	0	
	0	0	0	0	3	33	0	0	0	0	
	0	0	0	0	4	34	0	0	0	0	
	0	0	0	0	5	35	0	0	0	0	
	0	0	0	0	6	36	0	0	0	0	
	0	0	0	0	7	37	0	0	0	0	
	0	0	0	0	8	38	0	0	0	0	
	0	0	0	0	9	39	0	0	0	0	
	0	0	0	0	10	40	0	0	0	0	TURN DOWN-D
	0	0	0	0	11	41	0	0	0	0	
	0	0	0	0	12	42	0	0	0	0	
	0	0	0	0	13	43	0	0	0	0	
	0	0	0	0	14	44	0	0	0	0	
	0	0	0	0	15	45	0	0	0	0	
HOT METAL CHARGE-D	0	0	0	0	16	46	0	0	0	0	
	0	0	0	0	17	47	0	0	0	0	
HMC COMPLETE-D	0	0	0	0	18	48	0	0	0	0	TURNDOWN-D
BLOW-D	0	0	0	0	19	49	0	0	0	0	
	0	0	0	0	20	50	0	0	0	0	
	0	0	0	0	21	51	0	0	0	0	
	0	0	0	0	22	52	0	0	0	0	
	0	0	0	0	23	53	0	0	0	0	
	0	0	0	0	24	54	0	0	0	0	
	0	0	0	0	25	55	0	0	0	0	
	0	0	0	0	26	56	0	0	0	0	TAP-D
	0	0	0	0	27	57	0	0	0	0	
	0	0	0	0	28	58	0	0	0	0	
	0	0	0	0	29	59	0	0	0	0	

Additional info (include steam dissipation point)

Observer's Signature: Dan McClure

20071107 Method 9 Inspection Form.doc

OCS Environmental, Inc.
Method 9 VE Inspection Form

Date: 11-27-07
Source: #1 BOP ROOF MONITOR
Observation Start Time: 08:00:00
Observation End Time: 08:59:45
Observer's Position: SP1
Distance to source: 300 YARDS
Direction to source: NW 304°

Height of source: 185'
Vertical angle to source: 14°

	Start	End
Emissions color:	AS NOTED	SAME
Background:	BLUE SKY	↓
Sky Conditions:	P. CLOUDY	↓
Wind Speed:	7	↓
Wind Direction:	SW	↓
Ambient Temp:	29°	↓
Relative Humidity%:	89%	↓
Wet Bulb Temp:	—	↓

Plume Type: (Attached) Detached None

Comments	0	15	30	45			0	15	30	45	Comments
	0	0	0	0	0	30	0	0	0	0	
	0	0	0	0	1	31	0	0	0	0	
	0	0	0	0	2	32	0	0	0	0	
	0	0	0	0	3	33	0	0	0	0	
	0	0	0	0	4	34	0	0	0	0	
	0	0	0	0	5	35	0	0	0	0	HOT METAL CHARGE - D
	0	0	0	0	6	36	0	0	0	0	HMC COMPLETE - D
	0	0	0	0	7	37	0	0	0	0	
	0	0	0	0	8	38	0	0	0	0	BLOW - D
	0	0	0	0	9	39	0	0	0	0	
SCRAP CHARGE	0	0	0	0	10	40	0	0	0	0	
D-44482	0	0	0	0	11	41	0	0	0	0	
	0	0	0	0	12	42	0	0	0	0	
	0	0	0	0	13	43	0	0	0	0	
	0	0	0	0	14	44	0	0	0	0	
	0	0	0	0	15	45	0	0	0	0	
	0	0	0	0	16	46	0	0	0	0	
	0	0	0	0	17	47	0	0	0	0	
	0	0	0	0	18	48	0	0	0	0	
	0	0	0	0	19	49	0	0	0	0	
	0	0	0	0	20	50	0	0	0	0	
	0	0	0	0	21	51	0	0	0	0	
	0	0	0	0	22	52	0	0	0	0	
	0	0	0	0	23	53	0	0	0	0	
	0	0	0	0	24	54	0	0	0	0	
	0	0	0	0	25	55	0	0	0	0	
	0	0	0	0	26	56	0	0	0	0	
	0	0	0	0	27	57	0	0	0	0	
	0	0	0	0	28	58	0	0	0	0	
	0	0	0	0	29	59	0	0	0	0	

Additional info (include steam dissipation point)

Observer's Signature: Dan McClure

20071107 Method 9 Inspection Form.doc

OCS Environmental, Inc. – Method 9 VE Inspection Form

			Beginning (see comments)	End (see comments)
Date:	11-27-07	Emissions color:	AS NOTED	SAME
Source:	#1 BOP ROOF MONITOR	Background:	BLUE SKY	↓
Observ. Began:	09:00:00	Sky Conditions:	P. CLOUDY	↓
Observ. Ended:	09:11:45	Wind Speed:	8	↓
Observed from:	SP1	Wind direction:	SW	↓
Distance to source:	300 YARDS	Ambient temp:	29.°	↓
Direction to source:	NW 304°	Wet bulb temp:	—	↓
		Rel humidity%	89%	↓
Height of source:	185'			
Vert. angle to source:	14°			
Plume type:	ATTACHED			

Sheet: 4 of 4

Comments	0	15	30	45			0	15	30	45	Comments
	0	0	0	0	0	30					
TURNDOWN-D	0	0	0	0	1	31					
	0	0	0	0	2	32					
	0	0	0	0	3	33					
	0	0	0	0	4	34					
	0	0	0	0	5	35					
	0	0	0	0	6	36					
	0	0	0	0	7	37					
	0	0	0	0	8	38					
TAP-D	0	0	0	0	9	39					
	0	0	0	0	10	40					
FINISH	0	0	0	0	11	41					
					12	42					
					13	43					
					14	44					
					15	45					
					16	46					
					17	47					
					18	48					
					19	49					
					20	50					
					21	51					
					22	52					
					23	53					
					24	54					
					25	55					
					26	56					
					27	57					
					28	58					
					29	59					

Observers signature: Dan McClure

Additional info. (include steam dissipation point):

OCS Environmental, Inc.
Method 9 Source Layout Sketch

Date: 11 / 27 / 07

Observer Name: DAN MCCLURE

Begin Time: 06:45 Time End: 09:11

No Sun Visible Times
06:45
07:15

Observation Point

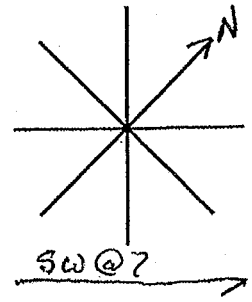

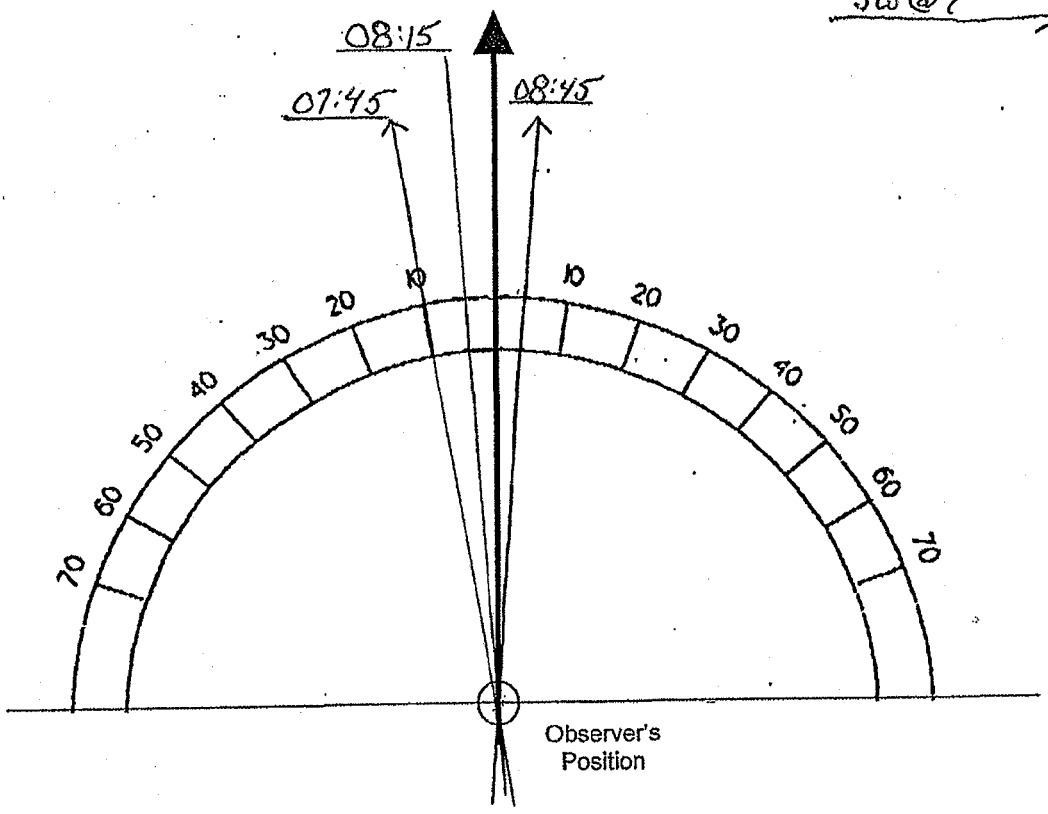

Signature: Dan McClure

20071107 Method 9 Source Layout Sketch.doc

13-2

OCS Environmental, Inc.

U.S. Steel Gary Works
Emissions Inspection Summary

Date: 11/28/07

Start Time: 0715 AM / PM

End Time: 0925 AM / PM

No. 2 Precarbon ESP

BOP	Roof Monitor		Gas Cleaners	
QBOP	Roof Monitor		Gas Cleaners	
Blast Furnace	4	6	8	14
Blast Furnace Top	4	6	8	14

The following events or operations contributed to significant emissions:

Time	Heat/Cast Number	Operation	Comments

20071107 Inspection Summary.doc

OCS Environmental, Inc.
Method 9 VE Inspection Form

Page 1 of 3

			Start	End
Date:	11-28-07	Emissions color:	AS NOTED	
Source:	#1 BOP-Roof	Background:	SKY	SAM
Observation Start Time:	0715	Sky Conditions:	pt. cloy	
Observation End Time:	0759	Wind Speed:	3-12	
Observer's Position:	SP1	Wind Direction:	S-SE	
Distance to source:	300 YDS	Ambient Temp:	26-30	
Direction to source:	NW	Relative Humidity%:	78%	
Height of source:	185'	Wet Bulb Temp:		
Vertical angle to source:	14°			

Plume Type: Attached Detached None

Comments	0	15	30	45			0	15	30	45	Comments
					0	30	0	0	0	0	
					1	31	0	0	0	0	
					2	32	0	0	0	0	
					3	33	0	0	0	0	TAP-D
					4	34	0	0	0	0	
					5	35	0	0	0	0	
					6	36	0	0	0	0	
					7	37	0	0	0	0	
					8	38	0	0	0	0	
					9	39	0	0	0	0	
					10	40	0	0	0	0	
					11	41	0	0	0	0	
					12	42	0	0	0	0	
					13	43	0	0	0	0	
					14	44	0	0	0	0	
BIP-D	0	0	0	0	15	45	0	0	0	0	
	0	0	0	0	16	46	0	0	0	0	
	0	0	0	0	17	47	0	0	0	0	
	0	0	0	0	18	48	0	0	0	0	
	0	0	0	0	19	49	0	0	0	0	
	0	0	0	0	20	50	0	0	0	0	
SCE-45776	0	0	0	0	21	51	0	0	0	0	
	0	0	0	0	22	52	0	0	0	0	
	0	0	0	0	23	53	0	0	0	0	
HMC-E	0	0	0	0	24	54	0	0	0	0	
TD-D	0	0	0	0	25	55	0	0	0	0	
END HMC	0	0	0	0	26	56	0	0	0	0	
BLOW-E	0	0	0	0	27	57	0	0	0	0	
	0	0	0	0	28	58	0	0	0	0	
RB-D	0	0	0	0	29	59	0	0	0	0	

Additional info (include steam dissipation point)
D-44495
E-45776

Observer's Signature [signature]

20071107 Method 9 Inspection Form.doc

OCS Environmental, Inc.
Method 9 VE Inspection Form

Date: 11-28-07
Source: #1 BOP
Observation Start Time: 0800
Observation End Time: 0859
Observer's Position: SP1
Distance to source: 300 yds
Direction to source: NW

Height of source: 185'
Vertical angle to source: 14°

	Start	End
Emissions color:	ASNOTED	SAME
Background:	Sky	
Sky Conditions:	M-CLDY	
Wind Speed:	3-12	
Wind Direction:	S-SE	
Ambient Temp:	28-32	
Relative Humidity%:	78%	
Wet Bulb Temp:	—	

Plume Type: (Attached) Detached None

Comments	0	15	30	45			0	15	30	45	Comments
	0	0	0	0	0	30	0	0	0	0	
	0	0	0	0	1	31	0	0	0	0	
	0	0	0	0	2	32	0	0	0	0	TOP E
	0	0	0	0	3	33	0	0	0	0	
	0	0	0	0	4	34	0	0	0	0	
	0	0	0	0	5	35	0	0	0	0	
	0	0	0	0	6	36	0	0	0	0	
	0	0	0	0	7	37	0	0	0	0	RB-E
	0	0	0	0	8	38	0	0	0	0	
	0	0	0	0	9	39	0	0	0	0	
	0	0	0	0	10	40	0	0	0	0	
	0	0	0	0	11	41	0	0	0	0	TIAP-E
	0	0	0	0	12	42	0	0	0	0	
	0	0	0	0	13	43	0	0	0	0	
	0	0	0	0	14	44	0	0	0	0	
Resume Blow-E	0	0	0	0	15	45	0	0	0	0	
NO IGNITION	0	0	0	0	16	46	0	0	0	0	
	0	0	0	0	17	47	0	0	0	0	
Resume Blow	0	0	0	0	18	48	0	0	0	0	
NO IGNITION	0	0	0	0	19	49	0	0	0	0	
	0	0	0	0	20	50	0	0	0	0	
Resume Blow	0	0	0	0	21	51	0	0	0	0	
NO IGNITION	0	0	0	0	22	52	0	0	0	0	
	0	0	0	0	23	53	0	0	0	0	
Resume Blow	0	0	0	0	24	54	0	0	0	0	SC-E
NO IG.	0	0	0	0	25	55	0	0	0	0	45777
	0	0	0	0	26	56	0	0	0	0	
Resume Blow	0	0	0	0	27	57	0	0	0	0	HMC
BRN-Red	0	0	0	45	28	58	10	10	10	0	BRN-Center
	50	20	0	0	29	59	0	0	0	0	END HMC

Additional info (include steam dissipation point)

Observer's Signature

20071107 Method 9 Inspection Form.doc

OCS Environmental, Inc.
Method 9 VE Inspection Form

Date:	11-28-07
Source:	#1 BOP-Roof
Observation Start Time:	0900
Observation End Time:	0925
Observer's Position:	SP1
Distance to source:	300 yds
Direction to source:	NW
Height of source:	185'
Vertical angle to source:	140

	Start	End
Emissions color:	AS noted	
Background:	Sky	Same
Sky Conditions:	Cloudy	
Wind Speed:	3-12	
Wind Direction:	S-SE	
Ambient Temp:	30-35	
Relative Humidity%:	76%	
Wet Bulb Temp:	–	

Plume Type: Attached Detached None

Comments	0	15	30	45			0	15	30	45	Comments
Blow-E	0	0	0	0	0	30					
	0	0	0	0	1	31					
	0	0	0	0	2	32					
	0	0	0	0	3	33					
	0	0	0	0	4	34					
	0	0	0	0	5	35					
	0	0	0	0	6	36					
	0	0	0	0	7	37					
	0	0	0	0	8	38					
	0	0	0	0	9	39					
BRN-Center	0	10	15	10	10	40					
	10	0	0	0	11	41					
	0	0	0	0	12	42					
	0	0	0	0	13	43					
	0	0	0	0	14	44					
	0	0	0	0	15	45					
	0	0	0	0	16	46					
	0	0	0	0	17	47					
	0	0	0	0	18	48					
	0	0	0	0	19	49					
	0	0	0	0	20	50					
	0	0	0	0	21	51					
TD-E	0	0	0	0	22	52					
	0	0	0	0	23	53					
	0	0	0	0	24	54					
	0	0	0	0	25	55					
					26	56					
					27	57					
					28	58					
					29	59					

Additional info (include steam dissipation point)

Observer's Signature

20071107 Method 9 Inspection Form.doc

67

OCS Environmental, Inc.
Method 9 Source Layout Sketch

Date: 11/28/07

Observer Name: J. SKALIK

Begin Time: 0715

Time End: 0925

No Sun Visible Times
0715, 0815, 0915

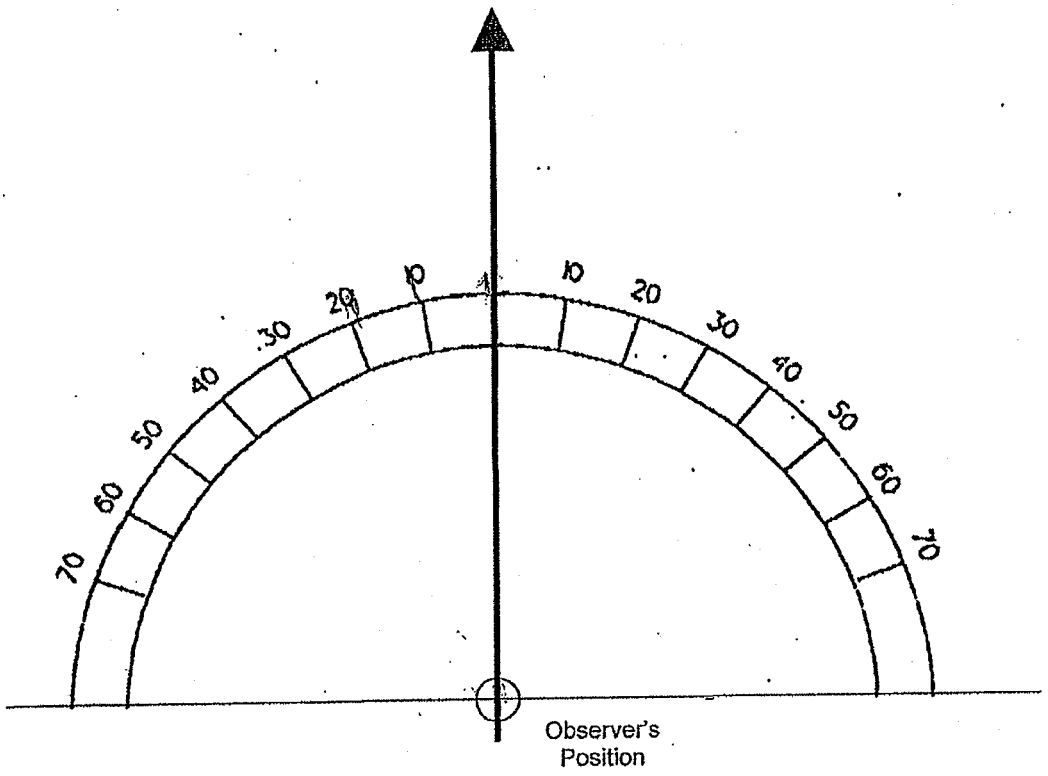

Signature:

20071107 Method 9 Source Layout Sketch.doc

13-3

OCS Environmental, Inc.

U.S. Steel Gary Works
Emissions Inspection Summary

Date: 11/20/07

Start Time: 0645 AM / PM

End Time: 0845 AM / PM

No. 2 Precarbon ESP

BOP	Roof Monitor		Gas Cleaners	
QBOP	Roof Monitor		Gas Cleaners	
Blast Furnace	4	6	8	14
Blast Furnace Top	4	6	8	14

The following events or operations contributed to significant emissions:

Time	Heat/Cast Number	Operation	Comments

20071107 Inspection Summary.doc

OCS Environmental, Inc.
Method 9 VE Inspection Form

Page 1 of 3

			Start	End
Date:	11-20-07			
Source:	1-BOF Roof	Emissions color:	As Noted	Same
Observation Start Time:	0645	Background:	Sky	
Observation End Time:	0659	Sky Conditions:	Overcast	
Observer's Position:	SP1	Wind Speed:	7	
Distance to source:	300 yds	Wind Direction:	NE	
Direction to source:	NW 304°	Ambient Temp:	49°	
		Relative Humidity%:	88%	
Height of source:	185'	Wet Bulb Temp:	N/A	
Vertical angle to source:	14°			

Plume Type: Attached Detached None

Comments	0	15	30	45			0	15	30	45	Comments
					0	30					
					1	31					
					2	32					
					3	33					
					4	34					
					5	35					
					6	36					
					7	37					
					8	38					
					9	39					
					10	40					
					11	41					
					12	42					
					13	43					
					14	44					
					15	45	0	0	0	0	Reblow - 44405-D
					16	46	0	0	0	0	48151 - Blow in progress - M
					17	47	0	0	0	0	
					18	48	0	0	0	0	TAP on D
					19	49	0	0	0	0	
					20	50	0	0	0	0	
					21	51	0	0	0	0	
					22	52	0	0	0	0	
					23	53	0	0	0	0	
					24	54	0	0	0	0	
					25	55	0	0	0	0	
					26	56	0	0	0	0	
					27	57	0	0	0	0	
					28	58	0	0	0	0	TAP - M - 48151
					29	59	0	0	0	0	

Additional info (include steam dissipation point)

Observer's Signature

E - 45691

48151 - Blow in

20071107 Method 9 Inspection Form.doc

OCS Environmental, Inc.
Method 9 VE Inspection Form

Page 2 of 3

			Start	End
Date:	11-20-07	Emissions color:	AS NOTED	SAME
Source:	1-BOP ROOF	Background:	SKY	
Observation Start Time:	0700	Sky Conditions:	OVERCAST	
Observation End Time:	0759	Wind Speed:	7	
Observer's Position:	SP-1	Wind Direction:	NE	
Distance to source:	300 YDS	Ambient Temp:	49°	
Direction to source:	NW 304'	Relative Humidity%:	88%	
Height of source:	125'	Wet Bulb Temp:	N/A	
Vertical angle to source:	14°			

Plume Type: Attached Detached None

Comments	0	15	30	45			0	15	30	45	Comments
	0	0	0	0	0	30	0	0	0	0	E - change scap # 45691
	0	0	0	0	1	31	0	0	0	0	
	0	0	0	0	2	32	0	0	0	0	
	0	0	0	0	3	33	0	0	0	0	
	0	0	0	0	4	34	0	0	0	0	
	0	0	0	0	5	35	0	0	0	0	
	0	0	0	0	6	36	0	0	0	0	
	0	0	0	0	7	37	0	0	0	0	
	0	0	0	0	8	38	0	0	0	0	
	0	0	0	0	9	39	0	0	0	0	
	0	0	0	0	10	40	0	0	0	0	
	0	0	0	0	11	41	0	0	0	0	TURN DWN D44406
	0	0	0	0	12	42	0	0	0	0	
	0	0	0	0	13	43	0	0	0	0	
	0	0	0	0	14	44	0	0	0	0	HtmL - E 45691
	0	0	0	0	15	45	0	0	0	0	
	0	0	0	0	16	46	0	0	0	0	
HtmL - D # 44406	0	0	0	0	17	47	0	0	0	0	HtmL complete - E
	0	0	0	0	18	48	0	0	0	0	Blow on E
	0	0	0	0	19	49	0	0	0	0	
HtmL - complete	0	0	0	0	20	50	0	0	0	0	TAP - D
	0	0	0	0	21	51	0	0	0	0	
Blow - D	0	0	0	0	22	52	0	0	0	0	
	0	0	0	0	23	53	0	0	0	0	
	0	0	0	0	24	54	0	0	0	0	
	0	0	0	0	25	55	0	0	0	0	
	0	0	0	0	26	56	0	0	0	0	
	0	0	0	0	27	57	0	0	0	0	
	0	0	0	0	28	58	0	0	0	0	
	0	0	0	0	29	59	0	0	0	0	

Additional Info (include steam dissipation point)

Observer's Signature: Rick J Mag

20071107 Method 9 Inspection Form.doc

OCS Environmental, Inc.
Method 9 VE Inspection Form

Date:	11-20-07
Source:	1-BOF ROOF
Observation Start Time:	0800
Observation End Time:	0845
Observer's Position:	SPI
Distance to source:	300405
Direction to source:	NW 304°
Height of source:	185'
Vertical angle to source:	14°

	Start	End
Emissions color:	AS NOTED	SAME
Background:	SKY	
Sky Conditions:	OVERCAST	
Wind Speed:	7	
Wind Direction:	NE	
Ambient Temp:	49°	
Relative Humidity%:	88%	
Wet Bulb Temp:	N/A	

Plume Type: Attached Detached None

Comments	0	15	30	45			0	15	30	45	Comments
	0	0	0	0	0	30	0	0	0	0	Htmc - Complete
	0	0	0	0	1	31	0	0	0	0	Blow - D
	0	0	0	0	2	32	0	0	0	0	
	0	0	0	0	3	33	0	0	0	0	
	0	0	0	0	4	34	0	0	0	0	
	0	0	0	0	5	35	0	0	0	0	
	0	0	0	0	6	36	0	0	0	0	
	0	0	0	0	7	37	0	0	0	0	
	0	0	0	0	8	38	0	0	0	0	
TURN DWN - E	0	0	0	0	9	39	0	0	0	0	
	0	0	0	0	10	40	0	0	0	0	SCRAP CHG - E
	0	0	0	0	11	41	0	0	0	0	#45692
	0	0	0	0	12	42	0	0	0	0	
	0	0	0	0	13	43	0	0	0	0	CHG Hmtl - E
	0	0	0	0	14	44	0	0	0	0	Hmtl complete
SCRAP chg - D	0	0	0	0	15	45					
# 44407	0	0	0	0	16	46					
TURN DWN - E	0	0	0	0	17	47					
	0	0	0	0	18	48					
	0	0	0	0	19	49					
	0	0	0	0	20	50					
	0	0	0	0	21	51					
TAP ON "E" 45691	0	0	0	0	22	52					
	0	0	0	0	23	53					
	0	0	0	0	24	54					
	0	0	0	0	25	55					
	0	0	0	0	26	56					
Html - D 44407	0	0	0	0	27	57					
	0	0	0	0	28	58					
	0	0	0	0	29	59					

Additional info (include steam dissipation point)

Observer's Signature

20071107 Method 9 Inspection Form.doc

OCS Environmental, Inc.
Method 9 Source Layout Sketch

Date: 11 / 20 / 07

Observer Name: R. Mackey

Begin Time: 0645 Time End: 0845

No Sun Visible Times
0645
0715
0745
0815

Observation Point

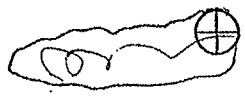

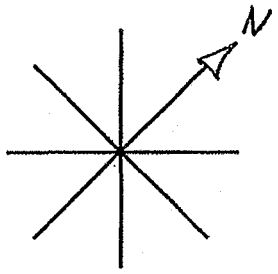

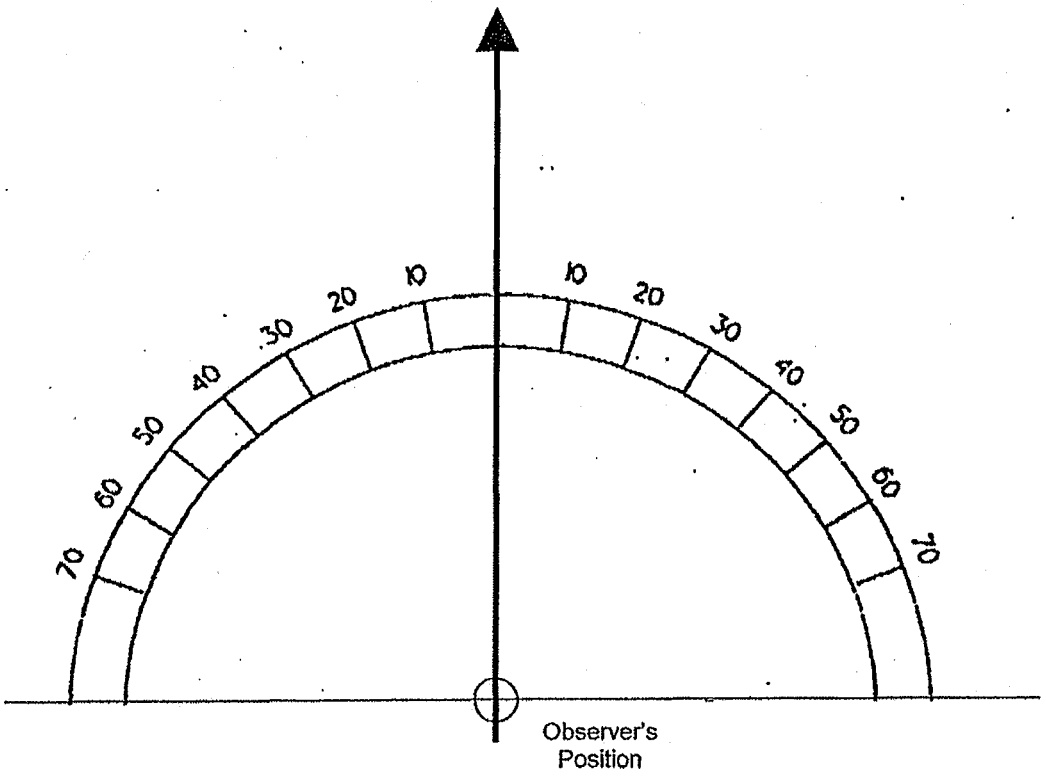

Signature: Rick J Mackey

20071107 Method 9 Source Layout Sketch.doc

13-4

OCS Environmental, Inc.

U.S. Steel Gary Works
Emissions Inspection Summary

Date: 11 / 19 / 07

Start Time: 0945 AM / PM

End Time: 1145 AM / PM

No. 2 Precarbon ESP

BOP	Roof Monitor		Gas Cleaners	
QBOP	Roof Monitor		Gas Cleaners	
Blast Furnace	4	6	8	14
Blast Furnace Top	4	6	8	14

The following events or operations contributed to significant emissions:

Time	Heat/Cast Number	Operation	Comments

20071107 Inspection Summary.doc

OCS Environmental, Inc.
Method 9 VE Inspection Form

			Start	End
Date:	11-19-07	Emissions color:	AS NOTED	SAME
Source:	1- BOF Roof	Background:	SKY	
Observation Start Time:	0945	Sky Conditions:	OVERCAST	
Observation End Time:	0959	Wind Speed:	10	
Observer's Position:	SPI	Wind Direction:	S	
Distance to source:	300405	Ambient Temp:	40°	
Direction to source:	NW 304	Relative Humidity%:	93%	
		Wet Bulb Temp:	N/A	
Height of source:	185'			
Vertical angle to source:	14°			

Plume Type: Attached Detached None

Comments	0	15	30	45			0	15	30	45	Comments
					0	30					
					1	31					
					2	32					
					3	33					
					4	34					
					5	35					
					6	36					
					7	37					
					8	38					
					9	39					
					10	40					
					11	41					
					12	42					
					13	43					
					14	44					
					15	45	0	0	0	0	D- 44391 -Blow
					16	46	0	0	0	0	in PROGRESS
					17	47	0	0	0	0	M- 43132- MT
					18	48	0	0	0	0	
					19	49	0	0	0	0	TURN PLUN - D
					20	50	0	0	0	0	
					21	51	0	0	0	0	
					22	52	0	0	0	0	
					23	53	0	0	0	0	
					24	54	0	0	0	0	
					25	55	0	0	0	0	
					26	56	0	0	0	0	
					27	57	0	0	0	0	
					28	58	0	0	0	0	
					29	59	0	0	0	0	M- 43132 SCRAP chg

Additional info (include steam dissipation point)

Observer's Signature

20071107 Method 9 Inspection Form.doc

OCS Environmental, Inc.
Method 9 VE Inspection Form

Date:	11-19-07
Source:	1-BOF Roof
Observation Start Time:	1000
Observation End Time:	1059
Observer's Position:	SP1
Distance to source:	300yds
Direction to source:	NW 304°
Height of source:	185'
Vertical angle to source:	14°

	Start	End
Emissions color:	AS NOTED	SAME
Background:	SKY	
Sky Conditions:	OVERCAST	
Wind Speed:	10	
Wind Direction:	S	
Ambient Temp:	40°	
Relative Humidity%:	93%	
Wet Bulb Temp:	N/A	

Plume Type: Attached Detached None

Comments	0	15	30	45			0	15	30	45	Comments
	0	0	0	0	0	30	0	0	0	0	
HmtL - M 48132	0	0	0	0	1	31	0	0	0	0	
TAP - D	0	0	0	0	2	32	0	0	0	0	
HtmtL Finished - M	0	0	0	0	3	33	0	0	0	0	TURN DOWN M
	0	0	0	0	4	34	0	0	0	0	
	0	0	0	0	5	35	0	0	0	0	
	0	0	0	0	6	36	0	0	0	0	
	0	0	0	0	7	37	0	0	0	0	
	0	0	0	0	8	38	0	0	0	0	
	0	0	0	0	9	39	0	0	0	0	TAP - M
	0	0	0	0	10	40	0	0	0	0	
	0	0	0	0	11	41	0	0	0	0	
	0	0	0	0	12	42	0	0	0	0	
Blow - M	0	0	0	0	13	43	0	0	0	0	
	0	0	0	0	14	44	0	0	0	0	
	0	0	0	0	15	45	0	0	0	0	
	0	0	0	0	16	46	0	0	0	0	TURN DOWN - D
	0	0	0	0	17	47	0	0	0	0	
scrapchg - D	0	0	0	0	18	48	0	0	0	0	
	0	0	0	0	19	49	0	0	0	0	
	0	0	0	0	20	50	0	0	0	0	
HtmL - D	0	0	0	0	21	51	0	0	0	0	
	0	0	0	0	22	52	0	0	0	0	
HtmL complete	0	0	0	0	23	53	0	0	0	0	
	0	0	0	0	24	54	0	0	0	0	
	0	0	0	0	25	55	0	0	0	0	
Blow ON DAISY	0	0	0	0	26	56	0	0	0	0	SCRAP - M. 48133.
	0	0	0	0	27	57	0	0	0	0	
	0	0	0	0	28	58	0	0	0	0	HtmL - M
	0	0	0	0	29	59	0	0	0	0	TAP - D

Additional info (include steam dissipation point)

Observer's Signature

OCS Environmental, Inc.
Method 9 VE Inspection Form

Date:	11-19-07
Source:	1-Bof Roof
Observation Start Time:	1100
Observation End Time:	1145
Observer's Position:	SPI
Distance to source:	300 yds
Direction to source:	NW 304°
Height of source:	185'
Vertical angle to source:	14°

	Start	End
Emissions color:	AS Noted	SAME
Background:	SKY	
Sky Conditions:	OVERCAST	
Wind Speed:	10	
Wind Direction:	S	
Ambient Temp:	40°	
Relative Humidity%:	93%	
Wet Bulb Temp:	N/A	

Plume Type: Attached Detached None

Comments	0	15	30	45			0	15	30	45	Comments
	0	0	0	0	0	30	0	0	0	0	
HPML complete	0	0	0	0	1	31	0	0	0	0	
	0	0	0	0	2	32	0	0	0	0	
	0	0	0	0	3	33	0	0	0	0	
	0	0	0	0	4	34	0	0	0	0	
	0	0	0	0	5	35	0	0	0	0	
Blow-M	0	0	0	0	6	36	0	0	0	0	
	0	0	0	0	7	37	0	0	0	0	TAP ON MARY
	0	0	0	0	8	38	0	0	0	0	
	0	0	0	0	9	39	0	0	0	0	
	0	0	0	0	10	40	0	0	0	0	
	0	0	0	0	11	41	0	0	0	0	
	0	0	0	0	12	42	0	0	0	0	
	0	0	0	0	13	43	0	0	0	0	
	0	0	0	0	14	44	0	0	0	0	
	0	0	0	0	15	45					
	0	0	0	0	16	46					
	0	0	0	0	17	47					
	0	0	0	0	18	48					
	0	0	0	0	19	49					
	0	0	0	0	20	50					
	0	0	0	0	21	51					
	0	0	0	0	22	52					
	0	0	0	0	23	53					
	0	0	0	0	24	54					
	0	0	0	0	25	55					
TURN OWN M	0	0	0	0	26	56					
	0	0	0	0	27	57					
	0	0	0	0	28	58					
	0	0	0	0	29	59					

Additional info (include steam dissipation point)

Observer's Signature: Rick J Mack

20071107 Method 9 Inspection Form.doc

OCS Environmental, Inc.
Method 9 Source Layout Sketch

Date: 11 / 19 / 07

Observer Name: R. MACKEY

Begin Time: 0945 Time End: 1145

No Sun Visible Times

0945
1015
1045
1115

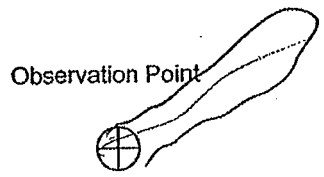

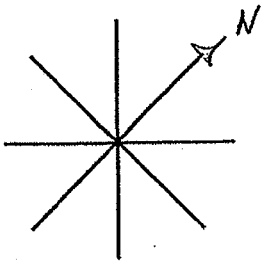

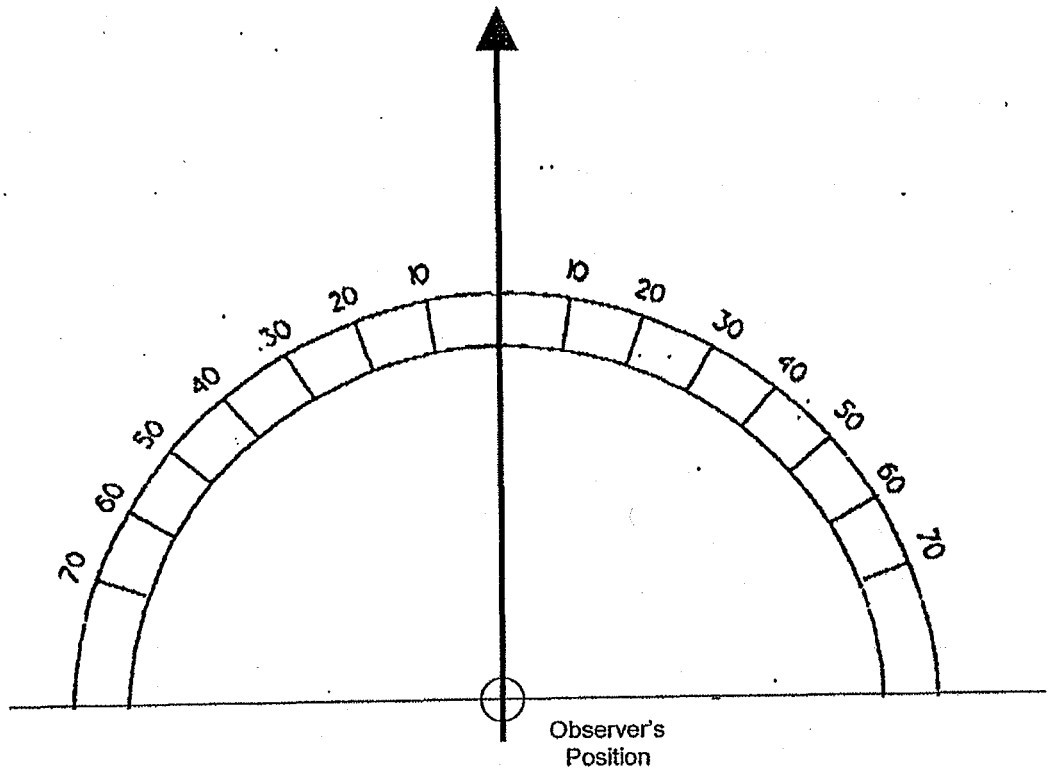

Signature:

20071107 Method 9 Source Layout Sketch.doc

13-5

OCS Environmental, Inc.

U.S. Steel Gary Works
Emissions Inspection Summary

Date: 11/30/07

Start Time: 1000 AM / PM

End Time: 1159 AM / PM

No. 2 Precarbon ESP

BOP	Roof Monitor		Gas Cleaners	
QBOP	Roof Monitor		Gas Cleaners	
Blast Furnace	4	6	8	14
Blast Furnace Top	4	6	8	14

The following events or operations contributed to significant emissions:

Time	Heat/Cast Number	Operation	Comments
	NO EXCESSIVE EMISSIONS		

20071107 Inspection Summary.doc

OCS Environmental, Inc.

U.S. Steel Gary Works
Emissions Inspection Summary

Date: 11/30/07

Start Time: 1000 AM / PM

End Time: 1159 AM / PM

No. 2 Precarbon ESP

BOP	Roof Monitor		Gas Cleaners	
QBOP	Roof Monitor		Gas Cleaners	
Blast Furnace	4	6	8	14
Blast Furnace Top	4	6	8	14

The following events or operations contributed to significant emissions:

Time	Heat/Cast Number	Operation	Comments
	NO EXCESSIVE EMISSIONS		

20071107 Inspection Summary.doc

OCS Environmental, Inc.
Method 9 VE Inspection Form

Page 1 of 2

			Start	End
Date:	11-30-06	Emissions color:		
Source:	#1 BOP ROOF	Background:	SKY BLUE	
Observation Start Time:	1000	Sky Conditions:	CLEAR	
Observation End Time:	1059	Wind Speed:	10 MPH	
Observer's Position:	SP-1	Wind Direction:	NW	
Distance to source:	300 YDS	Ambient Temp:	34	
Direction to source:	NW 304° MAG. NORTH	Relative Humidity%:	62%	
Height of source:	185 FT.	Wet Bulb Temp:		
Vertical angle to source:	14°			

Plume Type: Attached Detached None

Comments	0	15	30	45			0	15	30	45	Comments
M48239	0	0	0	0	0	30	0	0	0	0	
BLOW IN PROGRESS	0	0	0	0	1	31	0	0	0	0	
	0	0	0	0	2	32	0	0	0	0	
	0	0	0	0	3	33	0	0	0	0	
	0	0	0	0	4	34	0	0	0	0	TAP-M
	0	0	0	0	5	35	0	0	0	0	
	0	0	0	0	6	36	0	0	0	0	
	0	0	0	0	7	37	0	0	0	0	
	0	0	0	0	8	38	0	0	0	0	
	0	0	0	0	9	39	0	0	0	0	
	0	0	0	0	10	40	0	0	0	0	
	0	0	0	0	11	41	0	0	0	0	
TURNDOWN M	0	0	0	0	12	42	0	0	0	0	
	0	0	0	0	13	43	0	0	0	0	
	0	0	0	0	14	44	0	0	0	0	
	0	0	0	0	15	45	0	0	0	0	
	0	0	0	0	16	46	0	0	0	0	
	0	0	0	0	17	47	0	0	0	0	
	0	0	0	0	18	48	0	0	0	0	
	0	0	0	0	19	49	0	0	0	0	
	0	0	0	0	20	50	0	0	0	0	
	0	0	0	0	21	51	0	0	0	0	
	0	0	0	0	22	52	0	0	0	0	
	0	0	0	0	23	53	0	0	0	0	
REBLOW-M	0	0	0	0	24	54	0	0	0	0	
	0	0	0	0	25	55	0	0	0	0	
	0	0	0	0	26	56	0	0	0	0	
TURNDOWN-M	0	0	0	0	27	57	0	0	0	0	
	0	0	0	0	28	58	0	0	0	0	
	0	0	0	0	29	59	0	0	0	0	

Additional info (include steam dissipation point)

Observer's Signature: David Robinson

20071107 Method 9 Inspection Form.doc

OCS Environmental, Inc.
Method 9 VE Inspection Form

Page 2 of 2

Date: 11-30-07
Source: #1 BOP Roof
Observation Start Time: 1100
Observation End Time: 1159
Observer's Position: SP-1
Distance to source: 300 yds
Direction to source: NW 304° MAG NORTH
Height of source: 185 ft
Vertical angle to source: 14°

	Start	End
Emissions color:		
Background:	Sky Blue	
Sky Conditions:	Clear	
Wind Speed:	10 mph	
Wind Direction:	NW	
Ambient Temp:	38°	
Relative Humidity%:	62%	
Wet Bulb Temp:		

Plume Type: Attached Detached None

Comments	0	15	30	45			0	15	30	45	Comments
	0	0	0	0	0	30	0	0	0	0	
	0	0	0	0	1	31	0	0	0	0	
	0	0	0	0	2	32	0	0	0	0	
	0	0	0	0	3	33	0	0	0	0	HMC-M-
	0	0	0	0	4	34	0	10	10	5	GRAY 48240
	0	0	0	0	5	35	0	0	0	0	
	0	0	0	0	6	36	0	0	0	0	START BLOW-M
	0	0	0	0	7	37	0	0	0	0	
	0	0	0	0	8	38	0	0	0	0	
	0	0	0	0	9	39	0	0	0	0	
SC M-48240	0	0	0	0	10	40	0	0	0	0	
	0	0	0	0	11	41	0	0	0	0	
	0	0	0	0	12	42	0	0	0	0	
	0	0	0	0	13	43	0	0	0	0	
	0	0	0	0	14	44	0	0	0	0	
	0	0	0	0	15	45	0	0	0	0	
	0	0	0	0	16	46	0	0	0	0	
	0	0	0	0	17	47	0	0	0	0	
	0	0	0	0	18	48	0	0	0	0	
	0	0	0	0	19	49	0	0	0	0	
	0	0	0	0	20	50	0	0	0	0	
	0	0	0	0	21	51	0	0	0	0	
	0	0	0	0	22	52	0	0	0	0	
	0	0	0	0	23	53	0	0	0	0	
	0	0	0	0	24	54	0	0	0	0	
	0	0	0	0	25	55	0	0	0	0	
	0	0	0	0	26	56	0	0	0	0	
	0	0	0	0	27	57	0	0	0	0	TURNDOWN-MAG
	0	0	0	0	28	58	0	0	0	0	
	0	0	0	0	29	59	0	0	0	0	

Additional info (include steam dissipation point)

Observer's Signature: David Robinson

20071107 Method 9 Inspection Form.doc

OCS Environmental, Inc.
Method 9 Source Layout Sketch

Date: 11 / 30 / 07

Observer Name: H ROBINSON

Begin Time: 1000

Time End: 1159

No Sun Visible Times

Observation Point

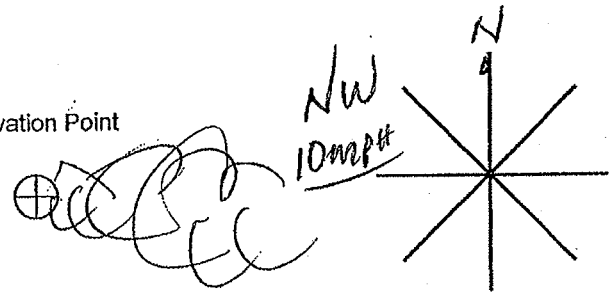

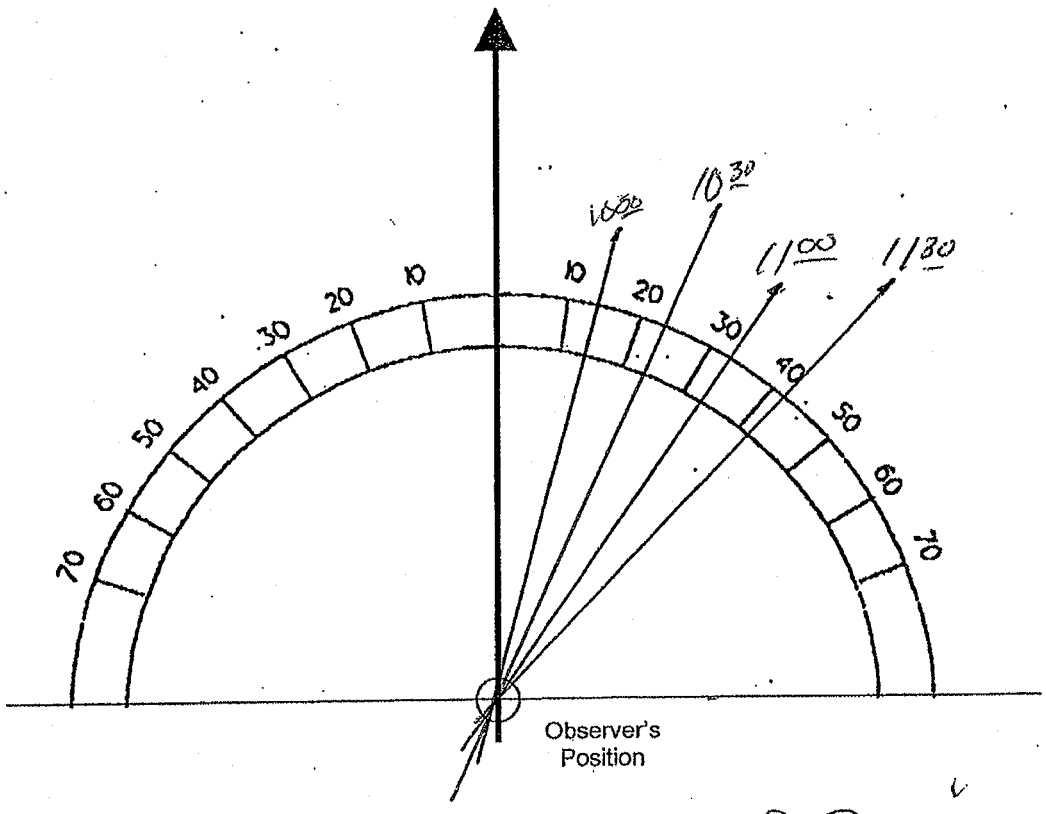

Signature: Harold Robinson

20071107 Method 9 Source Layout Sketch.doc

13-6

OCS Environmental, Inc.

U.S. Steel Gary Works
Emissions Inspection Summary

Date: 11/14/07

Start Time: 0700 AM / PM

End Time: 0900 AM / PM

No. 2 Precarbon ESP

BOP Roof Monitor Gas Cleaners

QBOP Roof Monitor Gas Cleaners

Blast Furnace	4	6	8	14
Blast Furnace Top	4	6	8	14

The following events or operations contributed to significant emissions:

Time	Heat/Cast Number	Operation	Comments

20071107 Inspection Summary.doc

E 45632
M 48063
D 44391

OCS Environmental, Inc.
Method 9 VE Inspection Form

Date:	11-14-07
Source:	#1BOF ROOF
Observation Start Time:	0700
Observation End Time:	0759
Observer's Position:	SPI
Distance to source:	300 yds
Direction to source:	NW 304°
Height of source:	185'
Vertical angle to source:	14°

	Start	End
Emissions color:	As Noted	SAME
Background:	SKY	
Sky Conditions:	Pt cloudy	
Wind Speed:	6	
Wind Direction:	NW	
Ambient Temp:	52°	
Relative Humidity%:	94%	
Wet Bulb Temp:	N/A	

Plume Type: Attached Detached None

Comments	0	15	30	45			0	15	30	45	Comments
E- 45632	0	0	0	0	0	30	0	0	0	0	
	0	0	0	0	1	31	0	0	0	0	
	0	0	0	0	2	32	0	0	0	0	
	0	0	0	0	3	33	0	0	0	0	
	0	0	0	0	4	34	0	0	0	0	
	0	0	0	0	5	35	0	0	0	0	
	0	0	0	0	6	36	0	0	0	0	
	0	0	0	0	7	37	0	0	0	0	
	0	0	0	0	8	38	0	0	0	0	M-48063-SCRAP
	0	0	0	0	9	39	0	0	0	0	
	0	0	0	0	10	40	0	0	0	0	
	0	0	0	0	11	41	0	0	0	0	
	0	0	0	0	12	42	0	0	0	0	
	0	0	0	0	13	43	0	0	0	0	
	0	0	0	0	14	44	0	0	0	0	
TURN DWN - E	0	0	0	0	15	45	0	0	0	0	
	0	0	0	0	16	46	0	0	0	0	
	0	0	0	0	17	47	0	0	0	0	
	0	0	0	0	18	48	0	0	0	0	
REBLOW - E	0	0	0	0	19	49	0	0	0	0	
	0	0	0	0	20	50	0	0	0	0	
	0	0	0	0	21	51	0	0	0	0	
	0	0	0	0	22	52	0	0	0	0	
	0	0	0	0	23	53	0	0	0	0	
TAP - E	0	0	0	0	24	54	0	0	0	0	
	0	0	0	0	25	55	0	0	0	0	
	0	0	0	0	26	56	0	0	0	0	
	0	0	0	0	27	57	0	0	0	0	
	0	0	0	0	28	58	0	0	0	0	
	0	0	0	0	29	59	0	0	0	0	

Additional info (include steam dissipation point)

Observer's Signature

[signature]

20071107 Method 9 Inspection Form.doc

OCS Environmental, Inc.
Method 9 VE Inspection Form

Date:	11-14-07
Source:	#1 Bof Roof
Observation Start Time:	0800
Observation End Time:	0859
Observer's Position:	SP 1
Distance to source:	300 YDS
Direction to source:	NW 304°
Height of source:	185'
Vertical angle to source:	14°

	Start	End
Emissions color:	AS Noted	SAME
Background:	Sky	
Sky Conditions:	Pt cloudy	
Wind Speed:	6	
Wind Direction:	NW	
Ambient Temp:	52°	
Relative Humidity%:	94%	
Wet Bulb Temp:	N/A	

Plume Type: Attached Detached None

Comments	0	15	30	45			0	15	30	45	Comments
	0	0	0	0	0	30	0	0	0	0	
	0	0	0	0	1	31	0	0	0	0	
	0	0	0	0	2	32	0	0	0	0	
	0	0	0	0	3	33	0	0	0	0	
	0	0	0	0	4	34	0	0	0	0	
	0	0	0	0	5	35	0	0	0	0	
	0	0	0	0	6	36	0	0	0	0	Blow on M
	0	0	0	0	7	37	0	0	0	0	
	0	0	0	0	8	38	0	0	0	0	
	0	0	0	0	9	39	0	0	0	0	
	0	0	0	0	10	40	0	0	0	0	
	0	0	0	0	11	41	0	0	0	0	
	0	0	0	0	12	42	0	0	0	0	
	0	0	0	0	13	43	0	0	0	0	
	0	0	0	0	14	44	0	0	0	0	
	0	0	0	0	15	45	0	0	0	0	
	0	0	0	0	16	46	0	0	0	0	
Hot-metal-M	0	0	0	0	17	47	0	0	0	0	
	0	0	0	0	18	48	0	0	0	0	
Hot m-comp.	0	0	0	0	19	49	0	0	0	0	
	0	0	0	0	20	50	0	0	0	0	
	0	0	0	0	21	51	0	0	0	0	
	0	0	0	0	22	52	0	0	0	0	
	0	0	0	0	23	53	0	0	0	0	
	0	0	0	0	24	54	0	0	0	0	
	0	0	0	0	25	55	0	0	0	0	E 45 643
	0	0	0	0	26	56	0	0	0	0	
	0	0	0	0	27	57	0	0	0	0	
	0	0	0	0	28	58	0	0	0	0	Turn Down - M
	0	0	0	0	29	59	0	0	0	0	

Additional info (include steam dissipation point)

Observer's Signature: [signature]

20071107 Method 9 Inspection Form.doc

OCS Environmental, Inc.
Method 9 Source Layout Sketch

Date: 11 / 14 / 07

Observer Name: R. Mackey

Begin Time: 0700

Time End: 0900

No Sun Visible Times

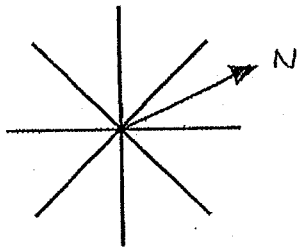

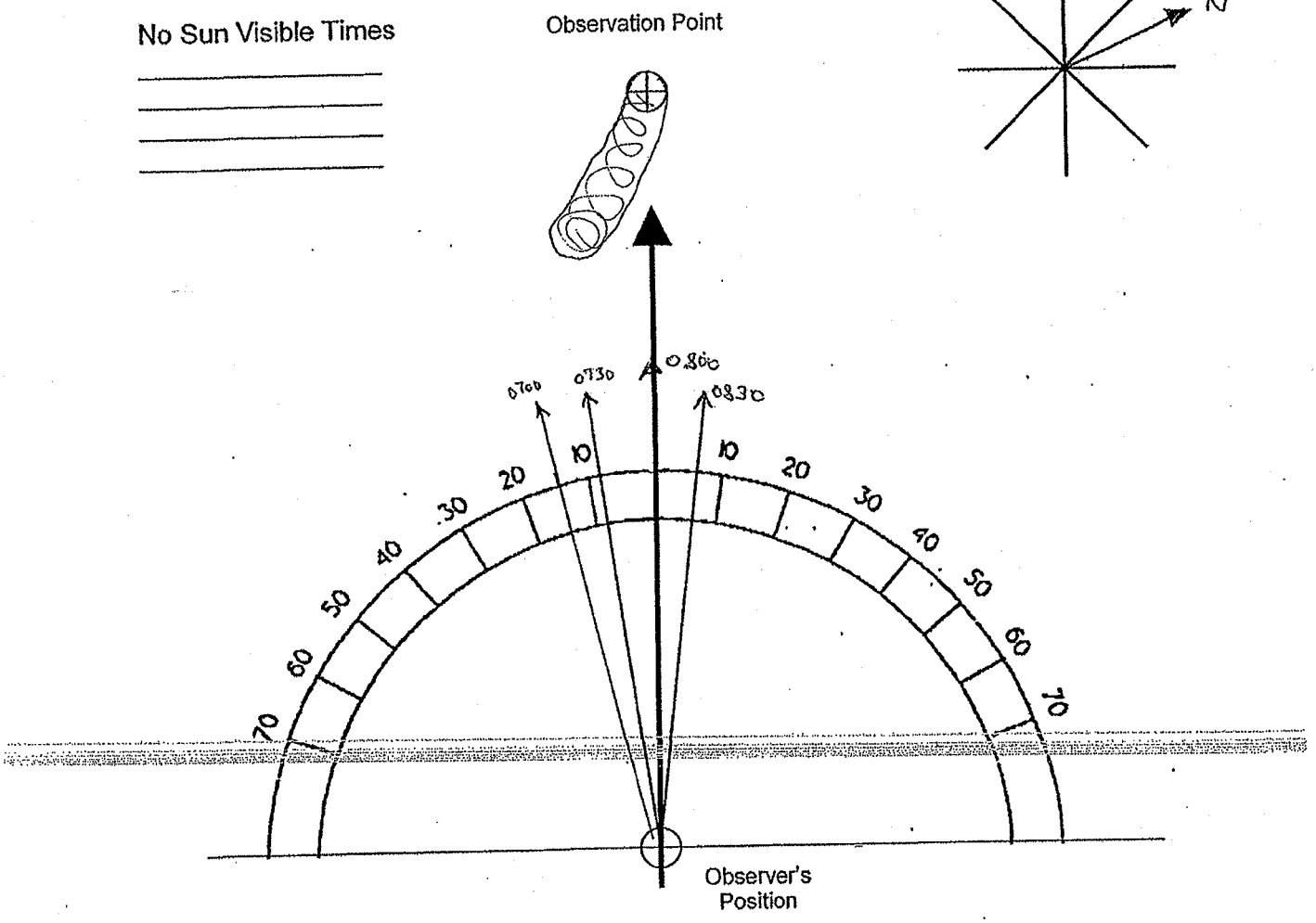

Signature: Richard J Mackey

20071107 Method 9 Source Layout Sketch.doc

13-7

OCS Environmental, Inc.

U.S. Steel Gary Works
Emissions Inspection Summary

Date: 12/06/2007

Start Time: 0700 AM / PM

End Time: 0900 AM / PM

No. 2 Precarbon ESP

BOP	Roof Monitor		Gas Cleaners	
QBOP	Roof Monitor		Gas Cleaners	
Blast Furnace	4	6	8	14
Blast Furnace Top	4	6	8	14

The following events or operations contributed to significant emissions:

Time	Heat/Cast Number	Operation	Comments

Jon Simpson

20071107 Inspection Summary.doc

OCS Environmental, Inc.
Method 9 VE Inspection Form

Page 1 of 2

Date: 12/06/07
Source: 1 Bop Roof
Observation Start Time: 0700
Observation End Time: 0759 45
Observer's Position: SP1
Distance to source: 300 yrds
Direction to source: NW 304°

Height of source: 185'
Vertical angle to source: 14°

	Start	End
Emissions color:	As Noted	SAME
Background:	sky	
Sky Conditions:	Mostly Cloudy	
Wind Speed:	3	
Wind Direction:	SW	
Ambient Temp:	8°	
Relative Humidity%:	100%	
Wet Bulb Temp:	—	—

Plume Type: Attached Detached None

Comments	0	15	30	45			0	15	30	45	Comments
	0	0	0	0	0	30	0	0	0	0	
	0	0	0	0	1	31	0	0	0	0	
	0	0	0	0	2	32	0	0	0	0	
SC-E 45854	0	0	0	0	3	33	0	0	0	0	
	0	0	0	0	4	34	0	0	0	0	
	0	0	0	0	5	35	0	0	0	0	
	0	0	0	0	6	36	0	0	0	0	
	0	0	0	0	7	37	0	0	0	0	
	0	0	0	0	8	38	0	0	10	5	TD-E gray C
HMC-E	0	0	0	0	9	39	0	0	0	0	
	0	0	0	0	10	40	0	0	0	0	
	0	0	0	0	11	41	0	0	0	0	
	0	0	0	0	12	42	0	0	0	0	
SC-D 44553	0	0	0	0	13	43	0	0	0	0	
Blow-E	0	0	0	0	14	44	0	0	0	0	TD-D
	0	0	0	0	15	45	0	0	0	0	
	0	0	0	0	16	46	0	0	0	0	TAP-E
	0	0	0	0	17	47	0	0	0	0	
	0	0	0	0	18	48	0	0	0	0	
HMC-D	0	0	0	0	19	49	0	0	0	0	
BROWN-S	0	5	5	0	20	50	0	0	0	0	
	0	0	0	0	21	51	0	0	0	0	
Blow-D	0	0	0	0	22	52	0	0	0	0	
	0	0	0	0	23	53	0	0	0	0	TAP-E
	0	0	0	0	24	54	0	0	0	0	
	0	0	0	0	25	55	0	0	0	0	
	0	0	0	0	26	56	0	0	0	0	
	0	0	0	0	27	57	0	0	0	0	SC-E 45855
	0	0	0	0	28	58	0	0	0	0	
	0	0	0	0	29	59	0	0	0	0	

Additional info (include steam dissipation point)

Observer's Signature: Jon Simpson

20071107 Method 9 Inspection Form.doc

OCS Environmental, Inc.
Method 9 VE Inspection Form

			Start	End
Date:	12/06/07	Emissions color:	As Noted	SAME
Source:	1 Bop Roof	Background:	Sky	
Observation Start Time:	08:00	Sky Conditions:	mostly cloudy	
Observation End Time:	08:59:45	Wind Speed:	3	
Observer's Position:	SP1	Wind Direction:	SW	
Distance to source:	300 yards	Ambient Temp:	8°	
Direction to source:	NW 304'	Relative Humidity%:	100%	
		Wet Bulb Temp:	—	—
Height of source:	155'			
Vertical angle to source:	14°			

Plume Type: Attached Detached None

Comments	0	15	30	45			0	15	30	45	Comments
	0	0	0	0	0	30	0	0	0	0	
	0	0	0	0	1	31	0	0	0	0	
	0	0	0	0	2	32	0	0	0	0	
SC-M 48295	0	0	0	0	3	33	0	0	0	0	TD-E
	0	0	0	0	4	34	0	0	0	0	
	0	0	0	0	5	35	0	0	0	0	
	0	0	0	0	6	36	0	0	0	0	
	0	0	0	0	7	37	0	0	0	0	
	0	0	0	0	8	38	0	0	0	0	
HMC-E	0	0	0	0	9	39	0	0	0	0	
	0	0	0	0	10	40	0	0	0	0	
	0	0	0	0	11	41	0	0	0	0	
	0	0	0	0	12	42	0	0	0	0	TD-M
Blow-E	0	0	0	0	13	43	0	0	0	0	
	0	0	0	0	14	44	0	0	0	0	TAP-E
	0	0	0	0	15	45	0	0	0	0	
	0	0	0	0	16	46	0	0	0	0	
HMC-M	0	0	0	0	17	47	0	0	0	0	
	0	0	0	0	18	48	0	0	0	0	
	0	0	0	0	19	49	0	0	0	0	
	0	0	0	0	20	50	0	0	0	0	
Blow-M	0	0	0	0	21	51	0	0	0	0	
	0	0	0	0	22	52	0	0	0	0	
	0	0	0	0	23	53	0	0	0	0	TAP-M
	0	0	0	0	24	54	0	0	0	0	
	0	0	0	0	25	55	0	0	0	0	
	0	0	0	0	26	56	0	0	0	0	
	0	0	0	0	27	57	0	0	0	0	SC-E 45956
	0	0	0	0	28	58	0	0	0	0	
	0	0	0	0	29	59	0	0	0	0	HMC-E

Additional info (include steam dissipation point)

Observer's Signature: Jon Dennison

20071107 Method 9 Inspection Form.doc

OCS Environmental, Inc.
Method 9 Source Layout Sketch

Date: 12,06,2007
Observer Name: Jon Simpson
Begin Time: 0700 Time End: 0900

No Sun Visible Times
0700,

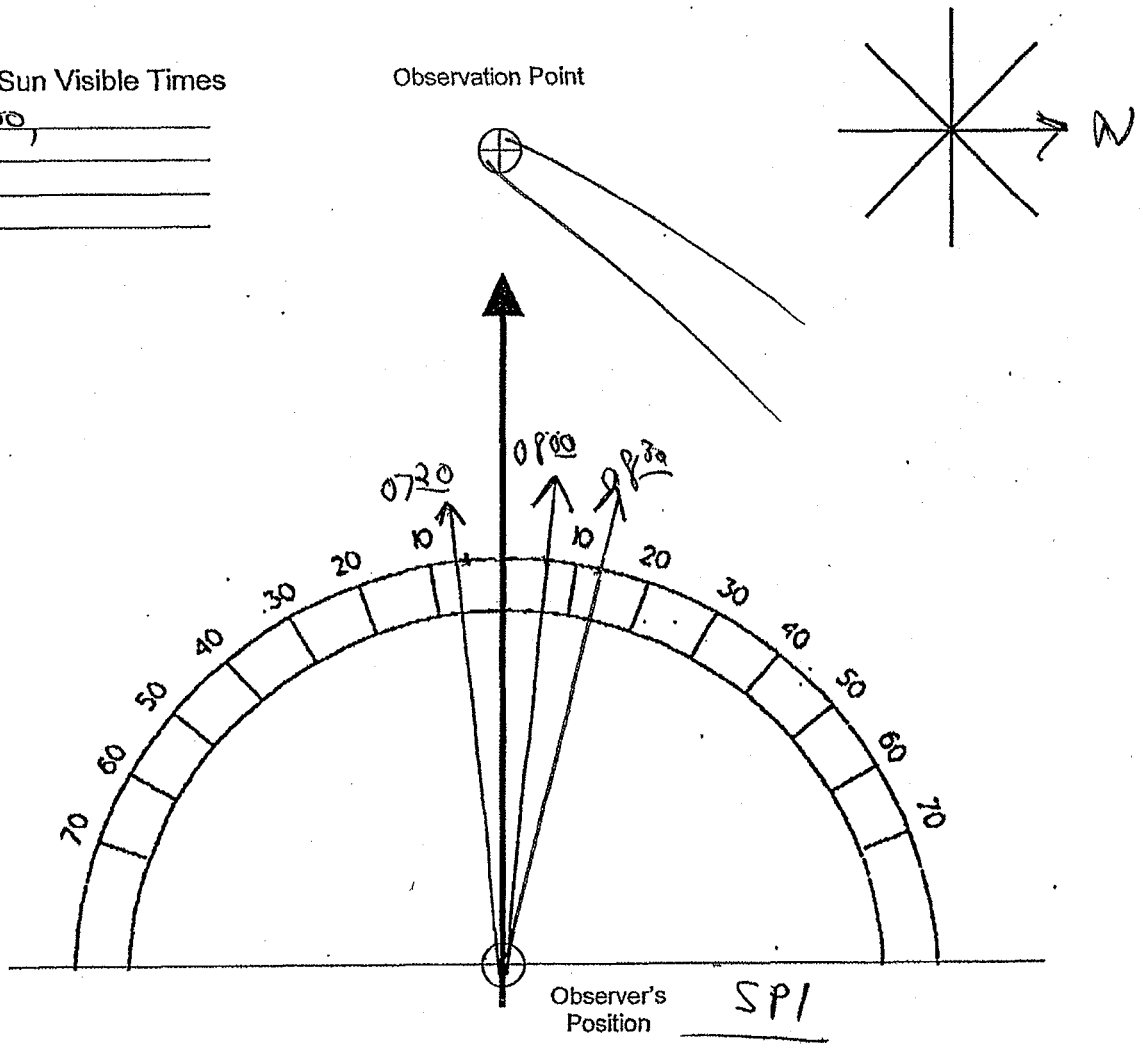

Signature: Jon Simpson

20071107 Method 9 Source Layout Sketch.doc

13 –

OCS Environmental, Inc.

U.S. Steel Gary Works
Emissions Inspection Summary

Date: 11, 12, 07

Start Time: 0700 AM / PM

End Time: 0900 AM / PM

No. 2 Precarbon ESP

BOP	Roof Monitor	Gas Cleaners
QBOP	Roof Monitor	Gas Cleaners

Blast Furnace	4	6	8	14
Blast Furnace Top	4	6	8	14

The following events or operations contributed to significant emissions:

Time	Heat/Cast Number	Operation	Comments

20071107 Inspection Summary.doc

OCS Environmental, Inc.
Method 9 VE Inspection Form

Date: 11/12/07
Source: 1 Bop RM
Observation Start Time: 0700
Observation End Time: 0800
Observer's Position: SPI
Distance to source: 300 yds
Direction to source: NW

Height of source: 185
Vertical angle to source: 140

	Start	End
Emissions color:	As noted	same
Background:	sky	
Sky Conditions:	cloudy	
Wind Speed:	6	
Wind Direction:	SW	
Ambient Temp:	55	
Relative Humidity%:	96%	
Wet Bulb Temp:		

Plume Type: (Attached) Detached None

Comments	0	15	30	45			0	15	30	45	Comments
D-94307 T-D	0	0	0	0	0	30	0	0	0	0	
M-48029	0	0	0	0	1	31	0	0	0	0	
	0	0	0	0	2	32	0	0	0	0	
	0	0	0	0	3	33	0	0	0	0	
	0	0	0	0	4	34	0	0	0	0	
	0	0	0	0	5	35	0	0	0	0	
	0	0	0	0	6	36	0	0	0	0	
cs-M	0	0	0	0	7	37	0	0	0	0	
	0	0	0	0	8	38	0	0	0	0	
	0	0	0	0	9	39	0	0	0	0	
HMC-M	0	0	0	0	10	40	0	0	0	0	TD-M
	0	0	0	0	11	41	0	0	0	0	
	0	0	0	0	12	42	0	0	0	0	
HMCC-M	0	0	0	0	13	43	0	0	0	0	
	0	0	0	0	14	44	0	0	0	0	
	0	0	0	0	15	45	0	0	0	0	
	0	0	0	0	16	46	0	0	0	0	
	0	0	0	0	17	47	0	0	0	0	
B-M	0	0	0	0	18	48	0	0	0	0	
	0	0	0	0	19	49	0	0	0	0	
	0	0	0	0	20	50	0	0	0	0	cs-E 45601
	0	0	0	0	21	51	0	0	0	0	T-M
	0	0	0	0	22	52	0	0	0	0	
E-45601	0	0	0	0	23	53	0	0	0	0	
	0	0	0	0	24	54	0	0	0	0	
	0	0	0	0	25	55	0	0	0	0	
	0	0	0	0	26	56	0	0	0	0	
	0	0	0	0	27	57	0	0	0	0	CHM-E
	0	0	0	0	28	58	0	0	0	0	
	0	0	0	0	29	59	0	0	0	0	HMCC-E

Additional Info (include steam dissipation point)

Observer's Signature: Laverne Patterson

OCS Environmental, Inc.
Method 9 VE Inspection Form

Date: 11/12/07
Source: 1 Base BM
Observation Start Time: 0800
Observation End Time: 0900
Observer's Position: Sel
Distance to source: 300 yds
Direction to source: NW

Height of source: 195
Vertical angle to source: 14°

	Start	End
Emissions color:	Aerated	Same
Background:	sky	
Sky Conditions:	cloudy	
Wind Speed:	6	
Wind Direction:	SW	
Ambient Temp:	55	
Relative Humidity%:	96%	
Wet Bulb Temp:		

Plume Type: (Attached) Detached None

Comments	0	15	30	45			0	15	30	45	Comments
	0	0	0	0	0	30	0	0	0	0	
	0	0	0	0	1	31	0	0	0	0	
	0	0	0	0	2	32	0	0	0	0	
	0	0	0	0	3	33	0	0	0	0	re-blew-E
	0	0	0	0	4	34	0	0	0	0	
	0	0	0	0	5	35	0	0	0	0	T-E
	0	0	0	0	6	36	0	0	0	0	
	0	0	0	0	7	37	0	0	0	0	
	0	0	0	0	8	38	0	0	0	0	
	0	0	0	0	9	39	0	0	0	0	
B-E	0	0	0	0	10	40	0	0	0	0	
	0	0	0	0	11	41	0	0	0	0	
	0	0	0	0	12	42	0	0	0	0	
	0	0	0	0	13	43	0	0	0	0	
	0	0	0	0	14	44	0	0	0	0	
	0	0	0	0	15	45	0	0	0	0	
	0	0	0	0	16	46	0	0	0	0	
	0	0	0	0	17	47	0	0	0	0	
	0	0	0	0	18	48	0	0	0	0	a.r.-M
	0	0	0	0	19	49	0	0	0	0	
	0	0	0	0	20	50	0	0	0	0	c.HM-M
	0	0	0	0	21	51	0	0	0	0	
	0	0	0	0	22	52	0	0	0	0	
	0	0	0	0	23	53	0	0	0	0	
	0	0	0	0	24	54	0	0	0	0	
	0	0	0	0	25	55	0	0	0	0	
	0	0	0	0	26	56	0	0	0	0	
	0	0	0	0	27	57	0	0	0	0	
TD-E	0	0	0	0	28	58	0	0	0	0	B-M
	0	0	0	0	29	59	0	0	0	0	

Additional info (include steam dissipation point)

Observer's Signature: Warren Patterson

20071107 Method 9 Inspection Form.doc

OCS Environmental, Inc.
Method 9 Source Layout Sketch

Date: 11/12/07

Observer Name: Clarence Patterson

Begin Time: 0700 Time End: 0900

No Sun Visible Times
0700
0730
0800
0930

Observation Point

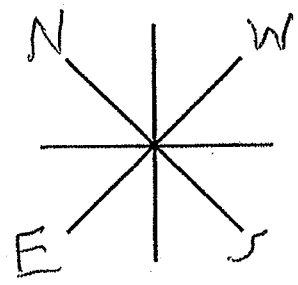

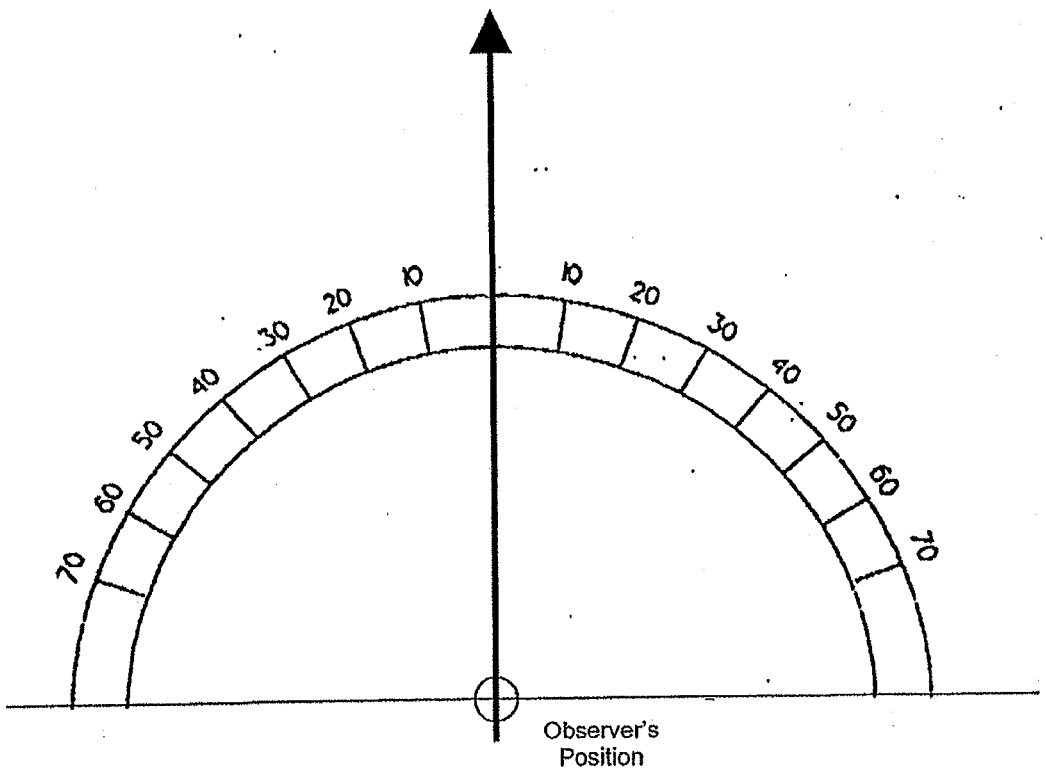

Signature: Clarence Patterson

20071107 Method 9 Source Layout Sketch.doc

13-9

OCS Environmental, Inc.

U.S. Steel Gary Works
Emissions Inspection Summary

Date: 11/16/2007

Start Time: 0700 AM / PM

End Time: 0900 AM / PM

No. 2 Precarbon ESP

BOP	Roof Monitor		Gas Cleaners	
QBOP	Roof Monitor		Gas Cleaners	
Blast Furnace	4	6	8	14
Blast Furnace Top	4	6	8	14

The following events or operations contributed to significant emissions:

Time	Heat/Cast Number	Operation	Comments

Jon Simpson

20071107 Inspection Summary.doc

OCS Environmental, Inc.
Method 9 VE Inspection Form

Page 1 of 2

			Start	End
Date:	11/16/07			
Source:	1 Bop Roof	Emissions color:	As Noted	Same
Observation Start Time:	0700	Background:	Sky	
Observation End Time:	075945	Sky Conditions:	mostly cloudy	
Observer's Position:	SP1	Wind Speed:	6	
Distance to source:	300yards	Wind Direction:	W	
Direction to source:	NW	Ambient Temp:	240	
		Relative Humidity%:	94%	
Height of source:	185'	Wet Bulb Temp:	—	—
Vertical angle to source:	14%			

Plume Type: Attached Detached None

Comments	0	15	30	45			0	15	30	45	Comments
Blow-M48080	0	0	0	0	0	30	0	0	0	0	
inprogress	0	0	0	0	1	31	0	0	0	0	
	0	0	0	0	2	32	0	0	0	0	
	0	0	0	0	3	33	0	0	0	0	
	0	0	0	0	4	34	0	0	0	0	
	0	0	0	0	5	35	0	0	0	0	
	0	0	0	0	6	36	0	0	0	0	
TD-M	0	0	0	0	7	37	0	0	0	0	
	0	0	0	0	8	38	0	0	0	0	
	0	0	0	0	9	39	0	0	0	0	
Rb-M	0	0	0	0	10	40	0	0	0	0	
	0	0	0	0	11	41	0	0	0	0	
	0	0	0	0	12	42	0	0	0	0	
TD-M	0	0	0	0	13	43	0	0	0	0	
	0	0	0	0	14	44	0	0	0	0	
	0	0	0	0	15	45	0	0	0	0	
SC-D 44344	0	0	0	0	16	46	0	0	0	0	
	0	0	0	0	17	47	0	0	0	0	
	0	0	0	0	18	48	0	0	0	0	SC-M44081
	0	0	0	0	19	49	0	0	0	0	
	0	0	0	0	20	50	0	0	0	0	
	0	0	0	0	21	51	0	0	0	0	Hme-D
TAP-M	0	0	0	0	22	52	0	0	0	0	
	0	0	0	0	23	53	0	0	0	0	
	0	0	0	0	24	54	0	0	0	0	
	0	0	0	0	25	55	0	0	0	0	Blow-D
	0	0	0	0	26	56	0	0	0	0	
	0	0	0	0	27	57	0	0	0	0	
	0	0	0	0	28	58	0	0	0	0	
	0	0	0	0	29	59	0	0	0	0	

Additional info (include steam dissipation point)

Observer's Signature: Jon Livingston

20071107 Method 9 Inspection Form.doc

OCS Environmental, Inc.
Method 9 VE Inspection Form

Date:	11/16/07
Source:	1 Bop Roof
Observation Start Time:	0800
Observation End Time:	08:59:45
Observer's Position:	SP1
Distance to source:	300yds
Direction to source:	NW
Height of source:	185'
Vertical angle to source:	14%

	Start	End
Emissions color:	As Noted	SAME
Background:	Sky	
Sky Conditions:	Overcast	
Wind Speed:	6	
Wind Direction:	W	
Ambient Temp:	25°	
Relative Humidity%:	94%	
Wet Bulb Temp:	—	—

Plume Type: Attached Detached None

Comments	0	15	30	45			0	15	30	45	Comments
	0	0	0	0	0	30	0	0	0	0	
	0	0	0	0	1	31	0	0	0	0	
	0	0	0	0	2	32	0	0	0	0	
	0	0	0	0	3	33	0	0	0	0	
	0	0	0	0	4	34	0	0	0	0	
	0	0	0	0	5	35	0	0	0	0	
	0	0	0	0	6	36	0	0	0	0	
	0	0	0	0	7	37	0	0	0	0	
	0	0	0	0	8	38	0	0	0	0	
	0	0	0	0	9	39	0	0	0	0	
	0	0	0	0	10	40	0	0	0	0	
	0	0	0	0	11	41	0	0	0	0	
	0	0	0	0	12	42	0	0	0	0	
	0	0	0	0	13	43	0	0	0	0	
	0	0	0	0	14	44	0	0	0	0	
	0	0	0	0	15	45	0	0	0	0	
	0	0	0	0	16	46	0	0	0	0	
	0	0	0	0	17	47	0	0	0	0	
TD-D	0	0	0	0	18	48	0	0	0	0	
	0	0	0	0	19	49	0	0	0	0	
	0	0	0	0	20	50	0	0	0	0	
HMC-M	0	0	0	0	21	51	0	0	0	0	
	0	0	0	0	22	52	0	0	0	0	
	0	0	0	0	23	53	0	0	0	0	
	0	0	0	0	24	54	0	0	0	0	
TAP-D	0	0	0	0	25	55	0	0	0	0	
	0	0	0	0	26	56	0	0	0	0	Blow-M
	0	0	0	0	27	57	0	0	0	0	
	0	0	0	0	28	58	0	0	0	0	
	0	0	0	0	29	59	0	0	0	0	

Additional info (include steam dissipation point)

Observer's Signature: Jon Simpson

OCS Environmental, Inc.
Method 9 Source Layout Sketch

Date: 11/16/2007

Observer Name: Jon Simpson

Begin Time: 0700 Time End: 085945

No Sun Visible Times
0900 - OVERCAST

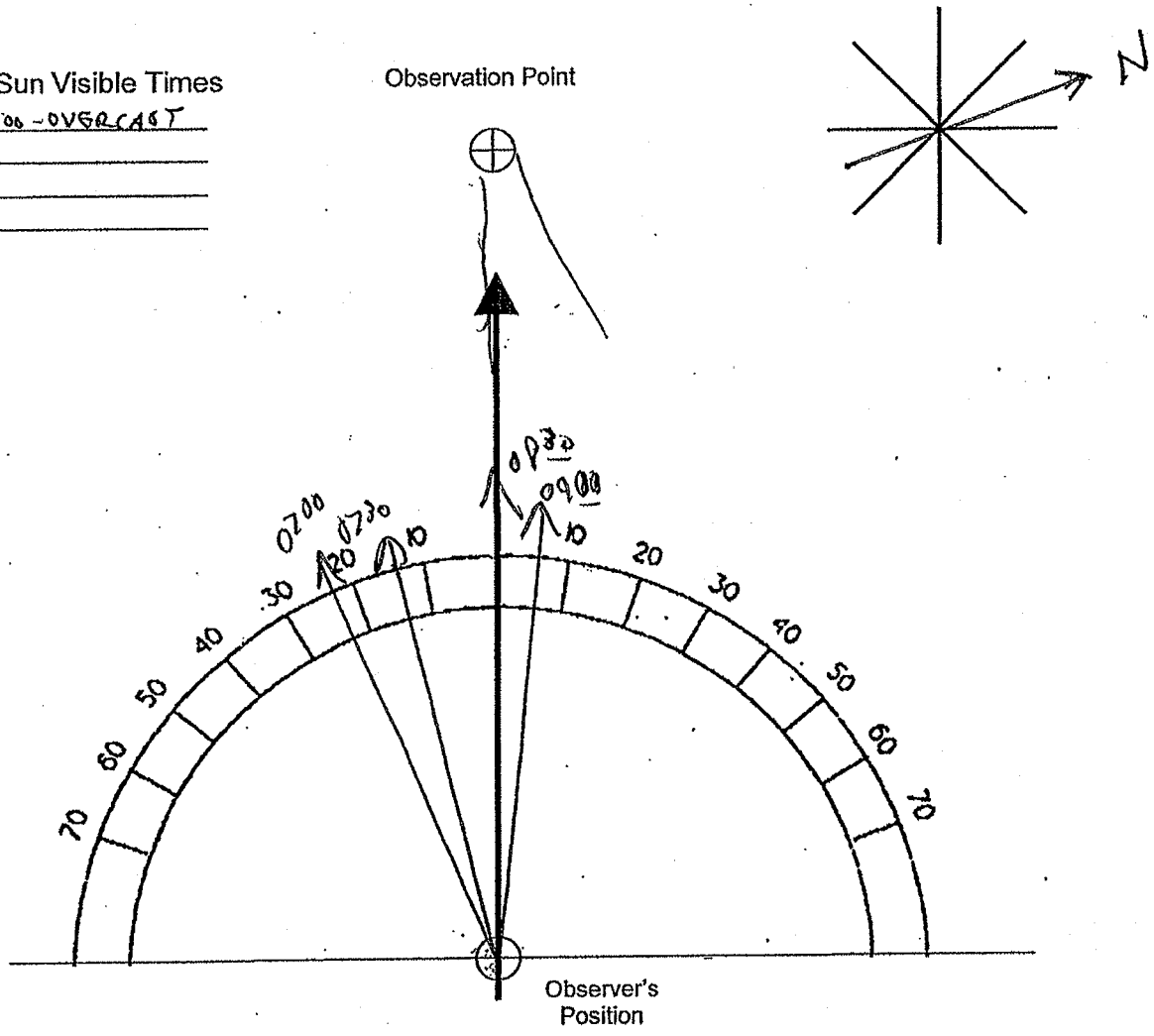

Signature: Jon Simpson

20071107 Method 9 Source Layout Sketch.doc

13-10

OCS Environmental, Inc.

U.S. Steel Gary Works
Emissions Inspection Summary

Date: 12/03/07

Start Time: 0700 AM / PM

End Time: 0859 AM / PM

No. 2 Precarbon ESP

BOP	Roof Monitor		Gas Cleaners	
QBOP	Roof Monitor		Gas Cleaners	
Blast Furnace	4	6	8	14
Blast Furnace Top	4	6	8	14

The following events or operations contributed to significant emissions:

Time	Heat/Cast Number	Operation	Comments

20071107 Inspection Summary.doc

OCS Environmental, Inc.
Method 9 VE Inspection Form

Page 2 of 2

Date:	12-03-07
Source:	#1 BOP-Roof
Observation Start Time:	0800
Observation End Time:	0859
Observer's Position:	SP1
Distance to source:	300 yds
Direction to source:	NW
Height of source:	185
Vertical angle to source:	14°

	Start	End
Emissions color:	As noted	
Background:	Sky	Same
Sky Conditions:	M cloy	
Wind Speed:	2-9	
Wind Direction:	SW	
Ambient Temp:	22-26	
Relative Humidity%:	81%	
Wet Bulb Temp:	—	

Plume Type: Attached Detached None

Comments	0	15	30	45			0	15	30	45	Comments
	0	0	0	0	0	30	0	0	0	0	
	0	0	0	0	1	31	0	0	0	0	
	0	0	0	0	2	32	0	0	0	0	
	0	0	0	0	3	33	0	0	0	0	
	0	0	0	0	4	34	0	0	0	0	
	0	0	0	0	5	35	0	0	0	0	
	0	0	0	0	6	36	0	0	0	0	
	0	0	0	0	7	37	0	0	0	0	
	0	0	0	0	8	38	0	0	0	0	
SC-M	0	0	0	0	9	39	0	0	0	0	
	0	0	0	0	10	40	0	0	0	0	
	0	0	0	0	11	41	0	0	0	0	
	0	0	0	0	12	42	0	0	0	0	
	0	0	0	0	13	43	0	0	0	0	
	0	0	0	0	14	44	0	0	0	0	
	0	0	0	0	15	45	0	0	0	0	
	0	0	0	0	16	46	0	0	0	0	
HMC-M	0	0	0	0	17	47	0	0	0	0	
	0	0	0	0	18	48	0	0	0	0	TD-M
	0	0	0	0	19	49	0	0	0	0	
END HMC	0	0	0	0	20	50	0	0	0	0	
	0	0	0	0	21	51	0	0	0	0	
	0	0	0	0	22	52	0	0	0	0	
	0	0	0	0	23	53	0	0	0	0	
	0	0	0	0	24	54	0	0	0	0	
	0	0	0	0	25	55	0	0	0	0	
	0	0	0	0	26	56	0	0	0	0	
BLOW-M	0	0	0	0	27	57	0	0	0	0	
	0	0	0	0	28	58	0	0	0	0	
	0	0	0	0	29	59	0	0	0	0	

Additional Info (include steam dissipation point)

Observer's Signature

20071107 Method 9 Inspection Form.doc

OCS Environmental, Inc.
Method 9 VE Inspection Form

Page 1 of 2

			Start	End
Date:	12-03-07	Emissions color:	IAS NOT @	
Source:	1 Bop-Roof	Background:	Sky	Same
Observation Start Time:	0700	Sky Conditions:	M. cloud	
Observation End Time:	0759	Wind Speed:	2-9	
Observer's Position:	SP1	Wind Direction:	SW	
Distance to source:	300 yds	Ambient Temp:	21-25	
Direction to source:	NW	Relative Humidity%:	81%	
Height of source:	185'	Wet Bulb Temp:	~~Same~~	
Vertical angle to source:	14°			

Plume Type: Attached Detached None

Comments	0	15	30	45			0	15	30	45	Comments
	0	0	0	0	0	30	0	0	0	0	
	0	0	0	0	1	31	0	0	0	0	
	0	0	0	0	2	32	0	0	0	0	
	0	0	0	0	3	33	0	0	0	0	
	0	0	0	0	4	34	0	0	0	0	
	0	0	0	0	5	35	0	0	0	0	
SCM-48262	0	0	0	0	6	36	0	0	0	0	
	0	0	0	0	7	37	0	0	0	0	
	0	0	0	0	8	38	0	0	0	0	
	0	0	0	0	9	39	0	0	0	0	
	0	0	0	0	10	40	0	0	0	0	
	0	0	0	0	11	41	0	0	0	0	
	0	0	0	0	12	42	0	0	0	0	TD-M
	0	0	0	0	13	43	0	0	0	0	
	0	0	0	0	14	44	0	0	0	0	
	0	0	0	0	15	45	0	0	0	0	
	0	0	0	0	16	46	0	0	0	0	
	0	0	0	0	17	47	0	0	0	0	
HMC-M	0	0	0	0	18	48	0	0	0	0	
	0	0	0	0	19	49	0	0	0	0	
END HMC	0	0	0	0	20	50	0	0	0	0	
BLOW-M	0	0	0	0	21	51	0	0	0	0	
	0	0	0	0	22	52	0	0	0	0	
	0	0	0	0	23	53	0	0	0	0	TAP-M
	0	0	0	0	24	54	0	0	0	0	
	0	0	0	0	25	55	0	0	0	0	
	0	0	0	0	26	56	0	0	0	0	
	0	0	0	0	27	57	0	0	0	0	
	0	0	0	0	28	58	0	0	0	0	
	0	0	0	0	29	59	0	0	0	0	

Additional info (include steam dissipation point)

Observer's Signature [signature]

20071107 Method 9 Inspection Form.doc

OCS Environmental, Inc.
Method 9 Source Layout Sketch

Date: 12/03/07

Observer Name: J. SBALK

Begin Time: 0700 Time End: 0859

No Sun Visible Times
0700
0800

Observation Point

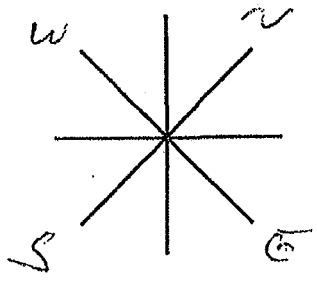

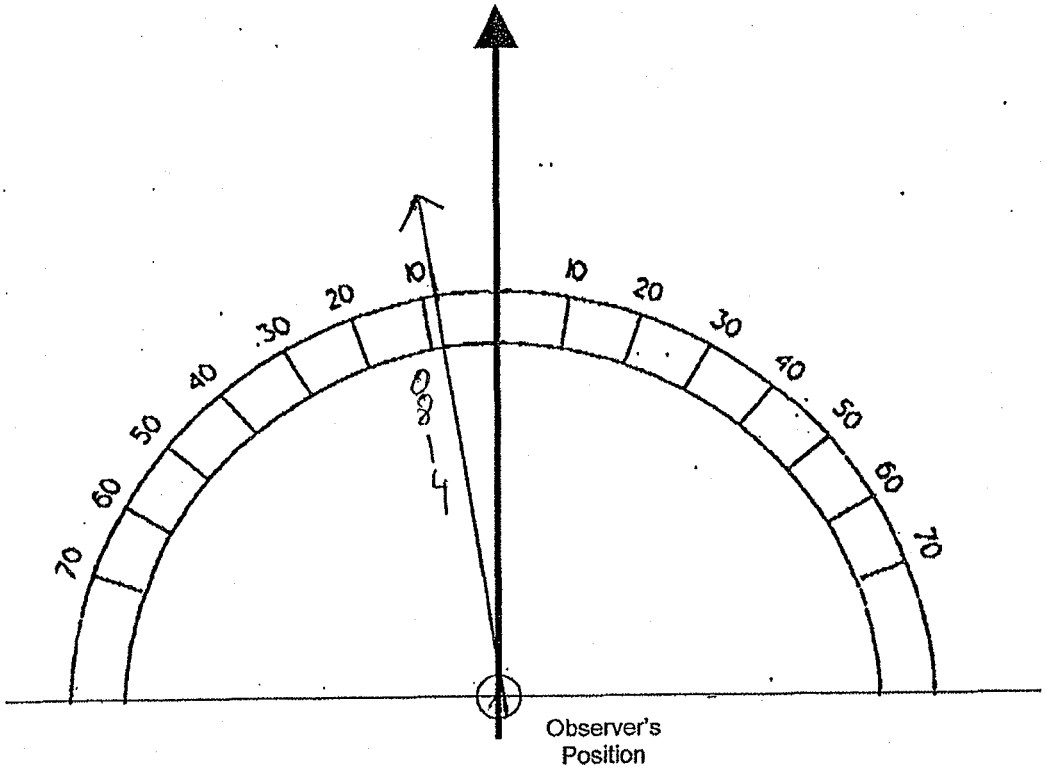

Signature:

20071107 Method 9 Source Layout Sketch.doc

13-11

OCS Environmental, Inc.

U.S. Steel Gary Works
Emissions Inspection Summary

Date: 11/21/07

Start Time: 0700 00 AM / PM

End Time: 0859 45 AM / PM

No. 2 Precarbon ESP

BOP	Roof Monitor		Gas Cleaners	
QBOP	Roof Monitor		Gas Cleaners	
Blast Furnace	4	6	8	14
Blast Furnace Top	4	6	8	14

The following events or operations contributed to significant emissions:

Time	Heat/Cast Number	Operation	Comments

20071107 Inspection Summary.doc

OCS Environmental, Inc.
Method 9 VE Inspection Form

Date:	11-21-07
Source:	1 BOP ROOF
Observation Start Time:	0700 00
Observation End Time:	0759 45
Observer's Position:	SP1
Distance to source:	300'
Direction to source:	NW
Height of source:	185
Vertical angle to source:	14°

	Start	End
Emissions color:	AS NOTED	
Background:	SKY	SAME
Sky Conditions:	OC	
Wind Speed:	9	
Wind Direction:	NE	
Ambient Temp:	43°	
Relative Humidity%:	100%	
Wet Bulb Temp:		

Plume Type: Attached Detached None

Comments	0	15	30	45			0	15	30	45	Comments
E45709	0	0	0	0	0	30	0	0	0	0	
D44425 TAP "E"	0	0	0	0	1	31	0	0	0	0	
M48157	0	0	0	0	2	32	0	0	0	0	
	0	0	0	0	3	33	0	0	0	0	
	0	0	0	0	4	34	0	0	0	0	
	0	0	0	0	5	35	0	0	0	0	
	0	0	0	0	6	36	0	0	0	0	
	0	0	0	0	7	37	0	0	0	0	
	0	0	0	0	8	38	0	0	0	0	
	0	0	0	0	9	39	0	0	0	0	
SCRAP CH. "M"	0	0	0	0	10	40	0	0	0	0	
	0	0	0	0	11	41	0	0	0	0	
	0	0	0	0	12	42	0	0	0	0	
	0	0	0	0	13	43	0	0	0	0	
	0	0	0	0	14	44	0	0	0	0	
	0	0	0	0	15	45	0	0	0	0	
	0	0	0	0	16	46	0	0	0	0	
	0	0	0	0	17	47	0	0	0	0	
	0	0	0	0	18	48	0	0	0	0	
HMC "M"	0	0	0	0	19	49	0	0	0	0	
	0	0	0	0	20	50	0	0	0	0	
HMC COMP "M"	0	0	0	0	21	51	0	0	0	0	
	0	0	0	0	22	52	0	0	0	0	TURN DOWN "M"
	0	0	0	0	23	53	0	0	0	0	
	0	0	0	0	24	54	0	0	0	0	
	0	0	0	0	25	55	0	0	0	0	
	0	0	0	0	26	56	0	0	0	0	
	0	0	0	0	27	57	0	0	0	0	
	0	0	0	0	28	58	0	0	0	0	
BLOW "M"	0	0	0	0	29	59	0	0	0	0	TAP "M"

Additional info (include steam dissipation point)

Observer's Signature: J. Johnson

OCS Environmental, Inc.
Method 9 VE Inspection Form

			Start	End
Date:	11-21-07	Emissions color:	AS NOTED	SAME
Source:	1 BOP ROOF	Background:	SKY	
Observation Start Time:	0800 00	Sky Conditions:	OC	
Observation End Time:	0859 45	Wind Speed:	9	
Observer's Position:	SP-1	Wind Direction:	NE	
Distance to source:	300	Ambient Temp:	43°	
Direction to source:	NW	Relative Humidity%:	100%	
		Wet Bulb Temp:		
Height of source:	187			
Vertical angle to source:	14°			

Plume Type: Attached Detached None

Comments	0	15	30	45			0	15	30	45	Comments
	0	0	0	0	0	30	0	0	0	0	
	0	0	0	0	1	31	0	0	0	0	
	0	0	0	0	2	32	0	0	0	0	
	0	0	0	0	3	33	0	0	0	0	
	0	0	0	0	4	34	0	0	0	0	TURN DOWN "D"
	0	0	0	0	5	35	0	0	0	0	
	0	0	0	0	6	36	0	0	0	0	
	0	0	0	0	7	37	0	0	0	0	
	0	0	0	0	8	38	0	0	0	0	
SCRAP CH "D"	0	0	0	0	9	39	0	0	0	0	
	0	0	0	0	10	40	0	0	0	0	
HMC "D"	0	0	0	0	11	41	0	0	0	0	
	0	0	0	0	12	42	0	0	0	0	TAP "D"
	0	0	0	0	13	43	0	0	0	0	
HMC COMP. "D"	0	0	0	0	14	44	0	0	0	0	TURN DOWN "M"
BLOW "D"	0	0	0	0	15	45	0	0	0	0	
SRAP CH "M"	0	0	0	0	16	46	0	0	0	0	
	0	0	0	0	17	47	0	0	0	0	
	0	0	0	0	18	48	0	0	0	0	
	0	0	0	0	19	49	0	0	0	0	
HMC "M"	0	0	0	0	20	50	0	0	0	0	
	0	0	0	0	21	51	0	0	0	0	
HMC COMP "M"	0	0	0	0	22	52	0	0	0	0	TAP "M"
	0	0	0	0	23	53	0	0	0	0	SCRAP CH "D"
BLOW "M"	0	0	0	0	24	54	0	0	0	0	
	0	0	0	0	25	55	0	0	0	0	
	0	0	0	0	26	56	0	0	0	0	HMC "D"
	0	0	0	0	27	57	0	0	0	0	
	0	0	0	0	28	58	0	0	0	0	HMC COMP "D"
	0	0	0	0	29	59	0	0	0	0	BLOW

Additional info (include steam dissipation point)

Observer's Signature: J. Johnson

20071107 Method 9 Inspection Form.doc

OCS Environmental, Inc.
Method 9 Source Layout Sketch

Date: 11/21/07

Observer Name: J. Johnson

Begin Time: 0700 00

Time End: 0859 45

No Sun Visible Times

0700
0730
0800
0830

Observation Point

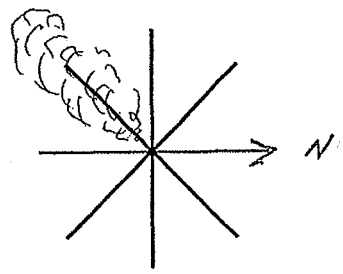

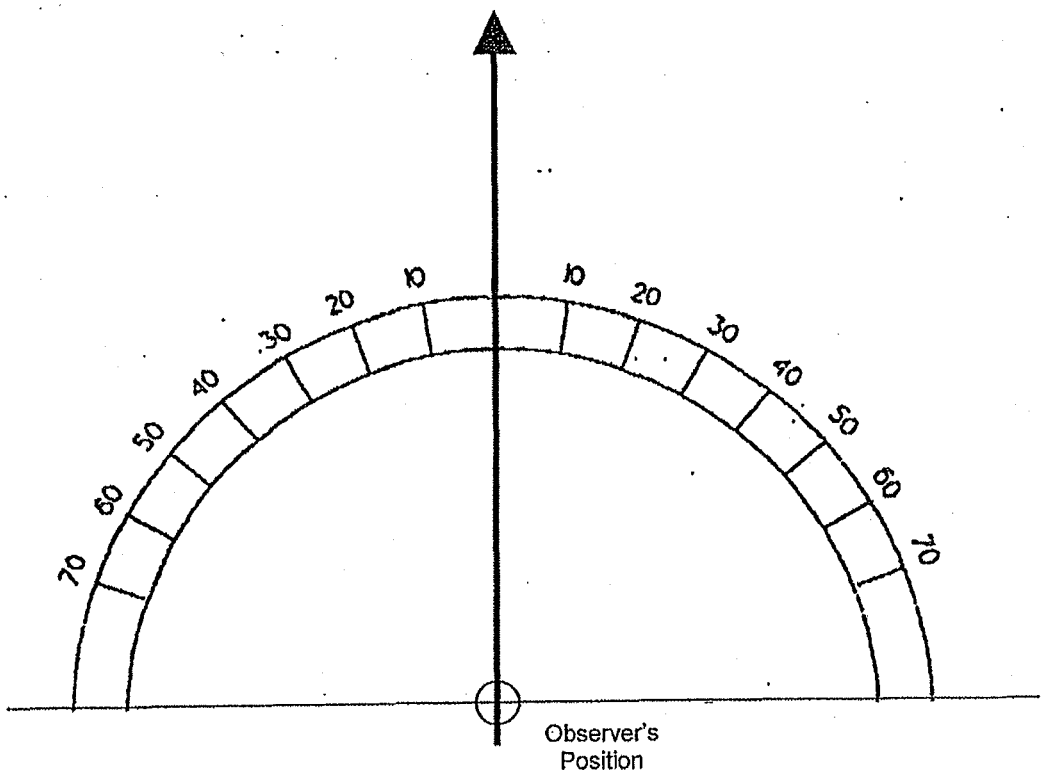

Signature: J. Johnson

20071107 Method 9 Source Layout Sketch.doc

13-12

OCS Environmental, Inc.

U.S. Steel Gary Works
Emissions Inspection Summary

Date: 12/05/07

Start Time: 0700 AM / PM

End Time: 0859 AM / PM

No. 2 Precarbon ESP

BOP Roof Monitor Gas Cleaners

QBOP Roof Monitor Gas Cleaners

Blast Furnace	4	6	8	14
Blast Furnace Top	4	6	8	14

The following events or operations contributed to significant emissions:

Time	Heat/Cast Number	Operation	Comments

20071107 Inspection Summary.doc

OCS Environmental, Inc.
Method 9 VE Inspection Form

Page 1 of 2

			Start	End
Date:	12-05-07	Emissions color:	AS NOTED	
Source:	#1 BOP - Roof	Background:	SKY	SAME
Observation Start Time:	0700	Sky Conditions:	CLDY	
Observation End Time:	0759	Wind Speed:	5-25	
Observer's Position:	SP1	Wind Direction:	NE	
Distance to source:	300 YDS	Ambient Temp:	29-33	
Direction to source:	NW	Relative Humidity%:	90%	
Height of source:	185	Wet Bulb Temp:	–	
Vertical angle to source:	14°			

Plume Type: Attached Detached None

Comments	0	15	30	45			0	15	30	45	Comments
BIP-E45836	0	0	0	0	0	30	0	0	0	0	
	0	0	0	0	1	31	0	0	0	0	
	0	0	0	0	2	32	0	0	0	0	
	0	0	0	0	3	33	0	0	0	0	
	0	0	0	0	4	34	0	0	0	0	
	0	0	0	0	5	35	0	0	0	0	
	0	0	0	0	6	36	0	0	0	0	
	0	0	0	0	7	37	0	0	0	0	
	0	0	0	0	8	38	0	0	0	0	
	0	0	0	0	9	39	0	0	0	0	
	0	0	0	0	10	40	0	0	0	0	SCE
	0	0	0	0	11	41	0	0	0	0	
TD-E	0	0	0	0	12	42	0	0	0	0	
	0	0	0	0	13	43	0	0	0	0	HMC-E
	0	0	0	0	14	44	0	0	0	0	END HMC
	0	0	0	0	15	45	0	0	0	0	
	0	0	0	0	16	46	0	0	0	0	
	0	0	0	0	17	47	0	0	0	0	
	0	0	0	0	18	48	0	0	0	0	
	0	0	0	0	19	49	0	0	0	0	
	0	0	0	0	20	50	0	0	0	0	
	0	0	0	0	21	51	0	0	0	0	
	0	0	0	0	22	52	0	0	0	0	
	0	0	0	0	23	53	0	0	0	0	
	0	0	0	0	24	54	0	0	0	0	
	0	0	0	0	25	55	0	0	0	0	
	0	0	0	0	26	56	0	0	0	0	
	0	0	0	0	27	57	0	0	0	0	
TAP-E	0	0	0	0	28	58	0	0	0	0	
	0	0	0	0	29	59	0	0	0	0	

Additional info (include steam dissipation point)
E 45836

Observer's Signature

20071107 Method 9 Inspection Form.doc

OCS Environmental, Inc.
Method 9 VE Inspection Form

			Start	End
Date:	12-05-07	Emissions color:	IAS North	
Source:	#1 BOP. Roof	Background:	Sky	Same
Observation Start Time:	0800	Sky Conditions:	CCDY	
Observation End Time:	0859	Wind Speed:	5-25	
Observer's Position:	SP1	Wind Direction:	NE	
Distance to source:	300 yds	Ambient Temp:	29-32	
Direction to source:	NW	Relative Humidity%:	90%	
Height of source:	185'	Wet Bulb Temp:	—	
Vertical angle to source:	14°			

Plume Type: Attached Detached None

Comments	0	15	30	45			0	15	30	45	Comments
	0	0	0	0	0	30	0	0	0	0	
	0	0	0	0	1	31	0	0	0	0	
	0	0	0	0	2	32	0	0	0	0	
	0	0	0	0	3	33	0	0	0	0	
	0	0	0	0	4	34	0	0	0	0	
	0	0	0	0	5	35	0	0	0	0	
BLOW-E	0	0	0	0	6	36	0	0	0	0	
	0	0	0	0	7	37	0	0	0	0	
	0	0	0	0	8	38	0	0	0	0	
	0	0	0	0	9	39	0	0	0	0	
	0	0	0	0	10	40	0	0	0	0	TAP-E
	0	0	0	0	11	41	0	0	0	0	
	0	0	0	0	12	42	0	0	0	0	
	0	0	0	0	13	43	0	0	0	0	
	0	0	0	0	14	44	0	0	0	0	
	0	0	0	0	15	45	0	0	0	0	
	0	0	0	0	16	46	0	0	0	0	
	0	0	0	0	17	47	0	0	0	0	
	0	0	0	0	18	48	0	0	0	0	
	0	0	0	0	19	49	0	0	0	0	
	0	0	0	0	20	50	0	0	0	0	
	0	0	0	0	21	51	0	0	0	0	
	0	0	0	0	22	52	0	0	0	0	SC-E
	0	0	0	0	23	53	0	0	0	0	
	0	0	0	0	24	54	0	0	0	0	
	0	0	0	0	25	55	0	0	0	0	
	0	0	0	0	26	56	0	0	0	0	
	0	0	0	0	27	57	0	0	0	0	
	0	0	0	0	28	58	0	0	0	0	
TD-E	0	0	0	0	29	59	0	0	0	0	HMC

Additional info (include steam dissipation point)

Observer's Signature

20071107 Method 9 Inspection Form.doc

OCS Environmental, Inc.
Method 9 Source Layout Sketch

Date: 12 / 05 / 07

Observer Name: J. SKALIK

Begin Time: 0700

Time End: 0859

No Sun Visible Times
0700
0800

Observation Point

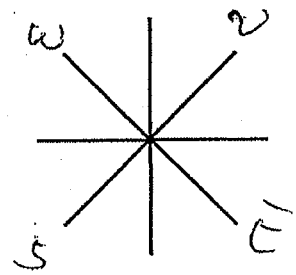

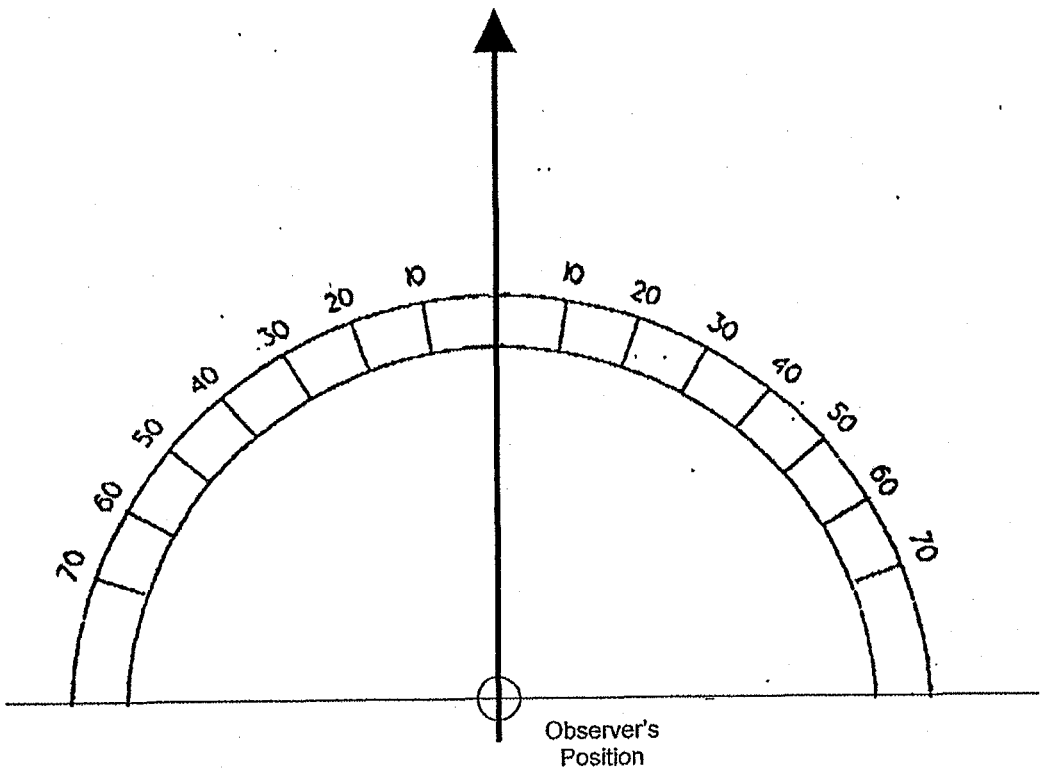

Signature:

20071107 Method 9 Source Layout Sketch.doc

14-1

OCS Environmental, Inc.

U.S. Steel Gary Works
Emissions Inspection Summary

Date: 11/19/07

Start Time: 06:45 AM / PM

End Time: 08:29 AM / PM

No. 2 Precarbon ESP

BOP	Roof Monitor		Gas Cleaners	
QBOP	Roof Monitor		Gas Cleaners	West
Blast Furnace	4	6	8	14
Blast Furnace Top	4	6	8	14

The following events or operations contributed to significant emissions:

Time	Heat/Cast Number	Operation	Comments

20071107 Inspection Summary.doc

OCS Environmental, Inc.
Method 9 VE Inspection Form

Page 1 of 3

			Start	End
Date:	12-19-07			
Source:	@ BOP GCS	Emissions color:	AS NOTED	SAME
Observation Start Time:	06:45	Background:	SKY	
Observation End Time:	06:59	Sky Conditions:	OVERCAST	
Observer's Position:	SP9	Wind Speed:	10 MPH	
Distance to source:	324 yds	Wind Direction:	S	
Direction to source:	NE 100°	Ambient Temp:	40°	
		Relative Humidity%:	93°	
Height of source:	190'	Wet Bulb Temp:	N/A	
Vertical angle to source:	9°			

Plume Type: Attached Detached None

Comments	0	15	30	45			0	15	30	45	Comments
W47394 BLOWIP.					0	30					
					1	31					
					2	32					
					3	33					
					4	34					
					5	35					
					6	36					
TDW					7	37					
					8	38					
					9	39					
					10	40					
					11	41					
					12	42					
					13	43					
					14	44					
					15	45	0	0	0	0	W47394 BLOWIP
					16	46	0	0	0	0	
					17	47	0	0	0	0	
					18	48	0	0	0	0	
					19	49	0	0	0	0	
					20	50	0	0	0	0	
					21	51	0	0	0	0	
					22	52	0	0	0	0	
					23	53	0	0	0	0	TDW
					24	54	0	0	0	0	
					25	55	0	0	0	0	
					26	56	0	0	0	0	
					27	57	0	0	0	0	
					28	58	0	0	0	0	
					29	59	0	0	0	0	

Additional info (include steam dissipation point)

W47394 BIP 6:45
Y49094 TDW

Observer's Signature

20071107 Method 9 Inspection Form.doc

OCS Environmental, Inc.
Method 9 VE Inspection Form

			Start	End
Date:	11-19-07			
Source:	2 QROP ECS (West)	Emissions color:	As noted	SAME
Observation Start Time:	07:00	Background:	Sky	
Observation End Time:	07:59	Sky Conditions:	Overcast	
Observer's Position:	SP9	Wind Speed:	10 mph	
Distance to source:	324 yds.	Wind Direction:	S	
Direction to source:	NE 105°	Ambient Temp:	40°	
		Relative Humidity%:	93%	
Height of source:	190'	Wet Bulb Temp:	N/A	
Vertical angle to source:	90°			

Plume Type: Attached Detached None

Comments	0	15	30	45			0	15	30	45	Comments
	0	0	0	0	0	30	0	0	0	0	
TAP-W	0	0	0	0	1	31	0	0	0	0	
	0	0	0	0	2	32	0	0	0	0	
	0	0	0	0	3	33	0	0	0	0	
	0	0	0	0	4	34	0	0	0	0	TAP Y
	0	0	0	0	5	35	0	0	0	0	HMC W
SMC-Y 49094	0	0	0	0	6	36	0	0	0	0	HMC Complete.
	0	0	0	0	7	37	0	0	0	0	BLOW
	0	0	0	0	8	38	0	0	0	0	
	0	0	0	0	9	39	0	0	0	0	
	0	0	0	0	10	40	0	0	0	0	
	0	0	0	0	11	41	0	0	0	0	
HMC Y	0	0	0	0	12	42	0	0	0	0	
HMC Complete	0	0	0	0	13	43	0	0	0	0	
BLOW Y	0	0	0	0	14	44	0	0	0	0	
	0	0	0	0	15	45	0	0	0	0	
SMC-W	0	0	0	0	16	46	0	0	0	0	
	0	0	0	0	17	47	0	0	0	0	
	0	0	0	0	18	48	0	0	0	0	
	0	0	0	0	19	49	0	0	0	0	SMC Y 49095
	0	0	0	0	20	50	0	0	0	0	
	0	0	0	0	21	51	0	0	0	0	
	0	0	0	0	22	52	0	0	0	0	
	0	0	0	0	23	53	0	0	0	0	TD-W
	0	0	0	0	24	54	0	0	0	0	
	0	0	0	0	25	55	0	0	0	0	
	0	0	0	0	26	56	0	0	0	0	REBLOW-W
	0	0	0	0	27	57	0	0	0	0	
	0	0	0	0	28	58	0	0	0	0	TAP-W
TDY	0	0	0	0	29	59	0	0	0	0	

Additional Info (include steam dissipation point)

Observer's Signature

OCS Environmental, Inc.
Method 9 VE Inspection Form

			Start	End
Date:	11-19-07			
Source:	2QBOP GCS (West)	Emissions color:	As noted	Same
Observation Start Time:	08:00	Background:	Sky	
Observation End Time:	08:29	Sky Conditions:	Overcast	
Observer's Position:	SP 9	Wind Speed:	10 MPH	
Distance to source:	324 yds	Wind Direction:	So.	
Direction to source:	NE	Ambient Temp:	40°	
	100°	Relative Humidity%:	93%	
Height of source:	190'	Wet Bulb Temp:	N/A.	
Vertical angle to source:	9°			

Plume Type: Attached Detached None

Comments	0	15	30	45			0	15	30	45	Comments
	0	0	0	0	0	30					
	0	0	0	0	1	31					
	0	0	0	0	2	32					
	0	0	0	0	3	33					
	0	0	0	0	4	34					
	0	0	0	0	5	35					
	0	0	0	0	6	36					
HMC - Y	0	0	0	0	7	37					
	0	0	0	0	8	38					
HMC - Complete	0	0	0	0	9	39					
Blow - Y	0	0	0	0	10	40					
	0	0	0	0	11	41					
	0	0	0	0	12	42					
	0	0	0	0	13	43					
	0	0	0	0	14	44					
	0	0	0	0	15	45					
SMC - W	0	0	0	0	16	46					
	0	0	0	0	17	47					
	0	0	0	0	18	48					
	0	0	0	0	19	49					
	0	0	0	0	20	50					
	0	0	0	0	21	51					
	0	0	0	0	22	52					
TDY	0	0	0	0	23	53					
	0	0	0	0	24	54					
	0	0	0	0	25	55					
	0	0	0	0	26	56					
	0	0	0	0	27	57					
	0	0	0	0	28	58					
TAP - Y	0	0	0	0	29	59					

Additional info (include steam dissipation point)

Observer's Signature

20071107 Method 9 Inspection Form.doc

OCS Environmental, Inc.
Method 9 Source Layout Sketch

Date: 11/19/07

Observer Name: Chet Ducin

Begin Time: 06:45 Time End: 08:29

No Sun Visible Times
06:45
07:15
07:45
08:15

Observation Point

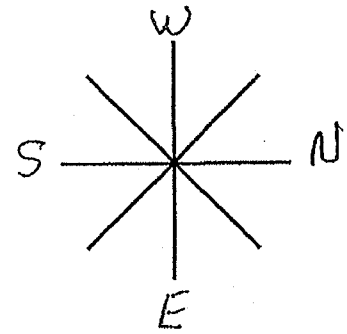

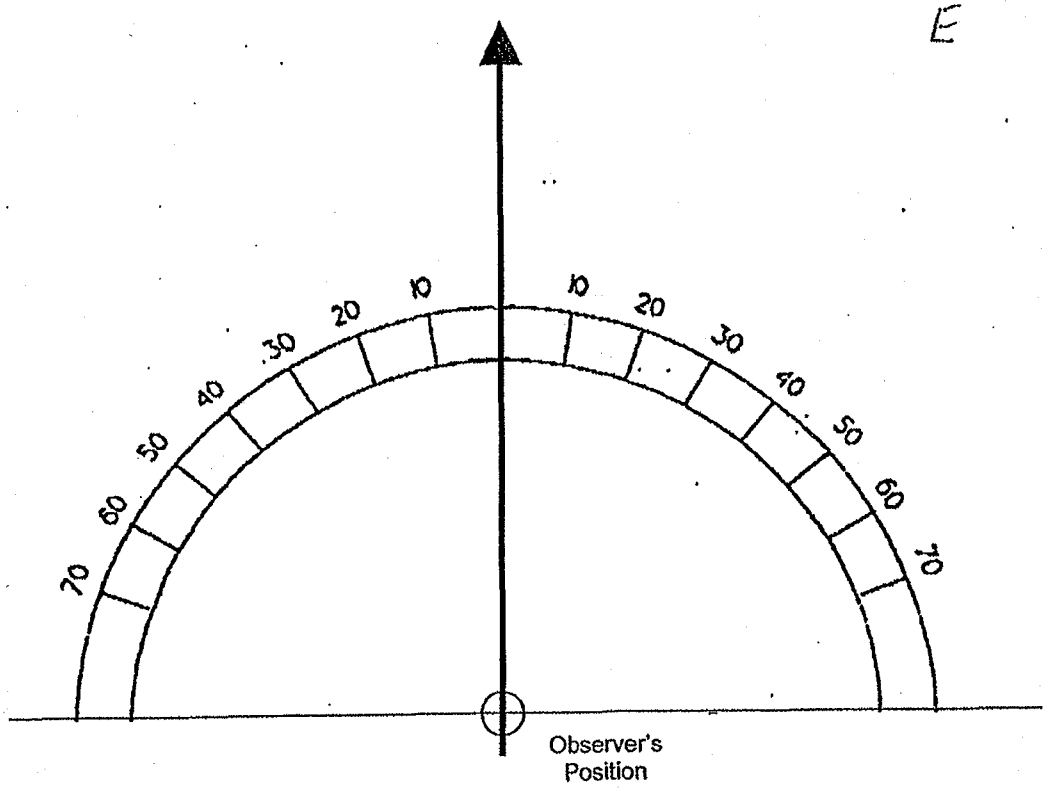

Signature: Chet Ducin

20071107 Method 9 Source Layout Sketch.doc

D44391
BIP.
M48132

OCS Environmental, Inc.

U.S. Steel Gary Works
Emissions Inspection Summary

Date: 11/19/07

Start Time: 08:30 AM / PM

End Time: 08:45 AM / PM

No. 2 Precarbon ESP

BOP	Roof Monitor		Gas Cleaners	
QBOP	Roof Monitor		Gas Cleaners EAST	
Blast Furnace	4	6	8	14
Blast Furnace Top	4	6	8	14

The following events or operations contributed to significant emissions:

Time	Heat/Cast Number	Operation	Comments

20071107 Inspection Summary.doc

OCS Environmental, Inc.
Method 9 VE Inspection Form

Page 1 of 1

			Start	End
Date:	11-19-07			
Source:	#2 OBOP GCS KAS	Emissions color:	ASUOTED	SAME
Observation Start Time:	08:30	Background:	SKY	
Observation End Time:	08:45	Sky Conditions:	OVERCAST	
Observed Point:	SP9	Wind Speed:	10 MPH	
Distance to source:	324 YDS	Wind Direction:	SO.	
Direction to source:	NE 100°	Ambient Temp:	40°	
		Relative Humidity%:	93 %	
Height of source:	190'	Wet Bulb Temp:	N/A.	
Vertical angle to source:	9°			

Plume Type: Attached Detached None

Comments	0	15	30	45			0	15	30	45	Comments
					0	30	0	0	0	0	
					1	31	0	0	0	0	
					2	32	0	0	0	0	HMC-W
					3	33	0	0	0	0	HMC-COMPLETE
					4	34	0	0	0	0	BLOW-W 8:38
					5	35	0	0	0	0	
					6	36	0	0	0	0	
					7	37	0	0	0	0	
					8	38	0	0	0	0	
					9	39	0	0	0	0	
					10	40	0	0	0	0	
					11	41	0	0	0	0	
					12	42	0	0	0	0	
					13	43	0	0	0	0	
					14	44	0	0	0	0	
					15	45	0	0	0	0	
					16	46					END OF OBSERVATION
					17	47					
					18	48					
					19	49					
					20	50					
					21	51					
					22	52					
					23	53					
					24	54					
					25	55					
					26	56					
					27	57					
					28	58					
					29	59					

Additional info (include steam dissipation point)

Observer's Signature: Chet Dunlap

20071107 Method 9 Inspection Form.doc

OCS Environmental, Inc.
Method 9 Source Layout Sketch

Date: 11/19/07

Observer Name: Chet Ducin

Begin Time: 08:30 Time End: 08:45

No Sun Visible Times
08:30

Observation Point

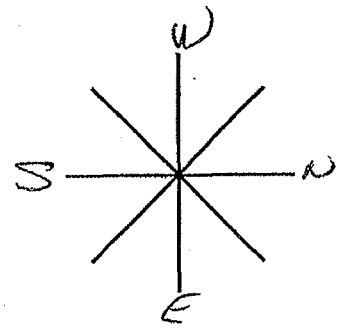

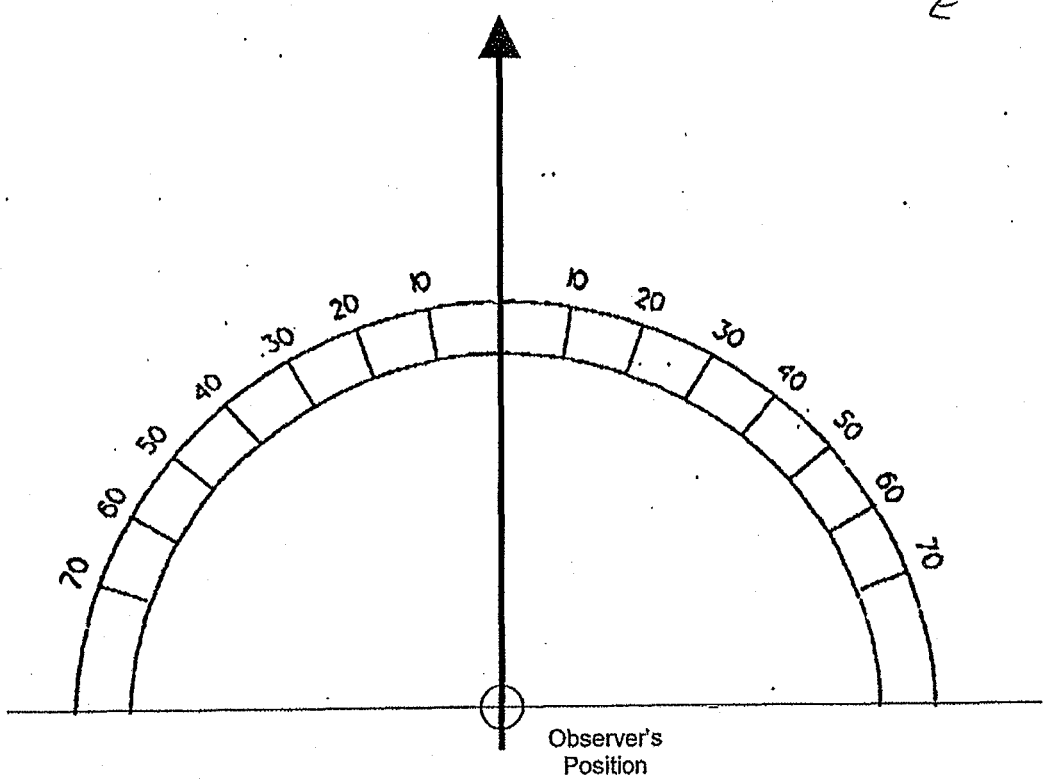

Signature: Chet Ducin

20071107 Method 9 Source Layout Sketch.doc

14-2

OCS Environmental, Inc.

U.S. Steel Gary Works
Emissions Inspection Summary

Date: 11/15/07

Start Time: 0930 AM / PM

End Time: 1129 AM / PM

No. 2 Precarbon ESP

BOP	Roof Monitor		~~Gas Cleaners~~	
QBOP	Roof Monitor		Gas Cleaners	
Blast Furnace	4	6	8	14
Blast Furnace Top	4	6	8	14

The following events or operations contributed to significant emissions:

Time	Heat/Cast Number	Operation	Comments
	NO EMISSIONS OBSERVED		

20071107 Inspection Summary.doc

OCS Environmental, Inc.
Method 9 VE Inspection Form

Page 1 of 3

Date: 11-15-07
Source: #2 Q-BOPG, C.S
Observation Start Time: 0930
Observation End Time: 0959
Observer's Position: SP-8
Distance to source: 350 yds
Direction to source: NE 124° MAG. NORTH
Height of source: 190 FT
Vertical angle to source: 19°

	Start	End
Emissions color:		
Background:	SKY-GRAY	
Sky Conditions:	CLOUDY	
Wind Speed:	15 MPH	
Wind Direction:	NW	
Ambient Temp:	40°	
Relative Humidity%:	60%	
Wet Bulb Temp:		

Plume Type: Attached Detached None

Comments	0	15	30	45			0	15	30	45	Comments
					0	30	0	0	0	0	EAST STACK
					1	31	0	0	0	0	
					2	32	0	0	0	0	
					3	33	0	0	0	0	
					4	34	0	0	0	0	
					5	35	0	0	0	0	
					6	36	0	0	0	0	
					7	37	0	0	0	0	
					8	38	0	0	0	0	
					9	39	0	0	0	0	
					10	40	0	0	0	0	
					11	41	0	0	0	0	
					12	42	0	0	0	0	
					13	43	0	0	0	0	
					14	44	0	0	0	0	
					15	45	0	0	0	0	
					16	46	0	0	0	0	
					17	47	0	0	0	0	
					18	48	0	0	0	0	
					19	49	0	0	0	0	
					20	50	0	0	0	0	
					21	51	0	0	0	0	
					22	52	0	0	0	0	
					23	53	0	0	0	0	
					24	54	0	0	0	0	
					25	55	0	0	0	0	
					26	56	0	0	0	0	
					27	57	0	0	0	0	
					28	58	0	0	0	0	
					29	59	0	0	0	0	

Additional info (include steam dissipation point)

Observer's Signature: Dave Robinson

20071107 Method 9 Inspection Form.doc

OCS Environmental, Inc.
Method 9 VE Inspection Form

Page 2 of 3

Date: 11-15-07
Source: #2 & BOP GCS
Observation Start Time: 1000
Observation End Time: 1059
Observer's Position: SP-8
Distance to source: 350 yds
Direction to source: NE 124° MAG. NORTH
Height of source: 190 ft.
Vertical angle to source: 19°

	Start	End
Emissions color:		
Background:	SKY: GRAY	
Sky Conditions:	Cloudy	
Wind Speed:	15 MPH	
Wind Direction:	N	
Ambient Temp:	40°	
Relative Humidity%:	60%	
Wet Bulb Temp:		

Plume Type: Attached Detached None

Comments	0	15	30	45			0	15	30	45	Comments
EAST STACK	0	0	0	0	0	30	0	0	0	0	WEST STACK
	0	0	0	0	1	31	0	0	0	0	
	0	0	0	0	2	32	0	0	0	0	
	0	0	0	0	3	33	0	0	0	0	
	0	0	0	0	4	34	0	0	0	0	
	0	0	0	0	5	35	0	0	0	0	
	0	0	0	0	6	36	0	0	0	0	
	0	0	0	0	7	37	0	0	0	0	
	0	0	0	0	8	38	0	0	0	0	
	0	0	0	0	9	39	0	0	0	0	
	0	0	0	0	10	40	0	0	0	0	
	0	0	0	0	11	41	0	0	0	0	
	0	0	0	0	12	42	0	0	0	0	
	0	0	0	0	13	43	0	0	0	0	
	0	0	0	0	14	44	0	0	0	0	
	0	0	0	0	15	45	0	0	0	0	
	0	0	0	0	16	46	0	0	0	0	
	0	0	0	0	17	47	0	0	0	0	
	0	0	0	0	18	48	0	0	0	0	
	0	0	0	0	19	49	0	0	0	0	
	0	0	0	0	20	50	0	0	0	0	
	0	0	0	0	21	51	0	0	0	0	
	0	0	0	0	22	52	0	0	0	0	
	0	0	0	0	23	53	0	0	0	0	
	0	0	0	0	24	54	0	0	0	0	
	0	0	0	0	25	55	0	0	0	0	
	0	0	0	0	26	56	0	0	0	0	
	0	0	0	0	27	57	0	0	0	0	
	0	0	0	0	28	58	0	0	0	0	
	0	0	0	0	29	59	0	0	0	0	

Additional info (include steam dissipation point)

Observer's Signature

20071107 Method 9 Inspection Form.doc

OCS Environmental, Inc.
Method 9 VE Inspection Form

Page 3 of 3

Date: 11-15-07
Source: #2 QBOP & CS.
Observation Start Time: 1100
Observation End Time: 1129
Observer's Position: SP-8
Distance to source: 350 YDS
Direction to source: NE 124°
NDR. NORTH
Height of source: 190 FT
Vertical angle to source: 19°

	Start	End
Emissions color:		
Background:	SKY GRAY	
Sky Conditions:	CLOUDY	S
Wind Speed:	15 MPH	N
Wind Direction:	N	NE
Ambient Temp:	40°	
Relative Humidity%:	60%	
Wet Bulb Temp:		

Plume Type: Attached Detached None

Comments	0	15	30	45			0	15	30	45	Comments
WEST STACK	0	0	0	0	0	30					
	0	0	0	0	1	31					
	0	0	0	0	2	32					
	0	0	0	0	3	33					
	0	0	0	0	4	34					
	0	0	0	0	5	35					
	0	0	0	0	6	36					
	0	0	0	0	7	37					
	0	0	0	0	8	38					
	0	0	0	0	9	39					
	0	0	0	0	10	40					
	0	0	0	0	11	41					
	0	0	0	0	12	42					
	0	0	0	0	13	43					
	0	0	0	0	14	44					
	0	0	0	0	15	45					
	0	0	0	0	16	46					
	0	0	0	0	17	47					
	0	0	0	0	18	48					
	0	0	0	0	19	49					
	0	0	0	0	20	50					
	0	0	0	0	21	51					
	0	0	0	0	22	52					
	0	0	0	0	23	53					
	0	0	0	0	24	54					
	0	0	0	0	25	55					
	0	0	0	0	26	56					
	0	0	0	0	27	57					
	0	0	0	0	28	58					
	0	0	0	0	29	59					

Additional info (include steam dissipation point)

Observer's Signature: Harold J. Robinson

20071107 Method 9 Inspection Form.doc

OCS Environmental, Inc.
Method 9 Source Layout Sketch

Date: 11/15/07

Observer Name: HAROLD ROBINSON

Begin Time: 0930 Time End: 1129

No Sun Visible Times
0930
1000
1030
1100

Observation Point

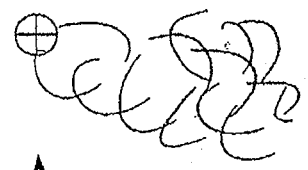

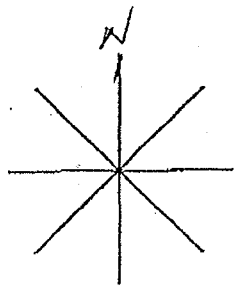

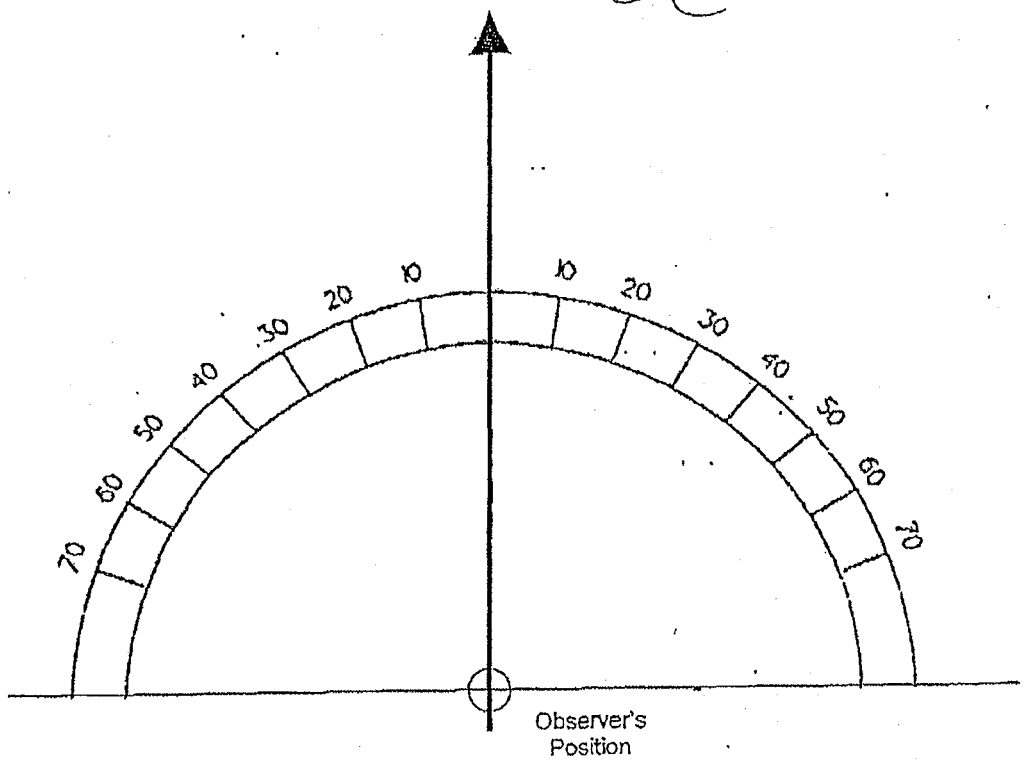

Signature: Harold Robinson

20071107 Method 9 Source Layout Sketch.doc

14-3

OCS Environmental, Inc.

U.S. Steel Gary Works
Emissions Inspection Summary

Date: 11/20/07

Start Time: 09:50 AM / PM

End Time: 11:49 AM / PM

No. 2 Precarbon ESP

BOP	Roof Monitor		Gas Cleaners	
QBOP	Roof Monitor		Gas Cleaners (West)	
Blast Furnace	4	6	8	14
Blast Furnace Top	4	6	8	14

The following events or operations contributed to significant emissions:

Time	Heat/Cast Number	Operation	Comments

20071107 Inspection Summary.doc

OCS Environmental, Inc.
Method 9 VE Inspection Form

			Start	End
Date:	11-20-07			
Source:	#2 QBOP BCS (West)	Emissions color:	AS NOTED	SAME
Observation Start Time:	09:50	Background:	SKY	
Observation End Time:	09:59	Sky Conditions:	OVERCAST	
Observer's Position:	SP9	Wind Speed:	3	
Distance to source:	325 YDS	Wind Direction:	NE	
Direction to source:	NE	Ambient Temp:	47	
	100'	Relative Humidity%:	96%	
Height of source:	190'	Wet Bulb Temp:	N/A	
Vertical angle to source:	9°			

Plume Type: Attached Detached None

Comments	0	15	30	45			0	15	30	45	Comments
					0	30					
					1	31					
					2	32					
					3	33					
					4	34					
					5	35					
					6	36					
					7	37					
					8	38					
					9	39					
					10	40					
					11	41					
					12	42					
					13	43					
					14	44					
					15	45					
					16	46					
					17	47					
					18	48					
					19	49					
					20	50	0	0	0	0	SOW47418
					21	51	0	0	0	0	
					22	52	0	0	0	0	
					23	53	0	0	0	0	
					24	54	0	0	0	0	
					25	55	0	0	0	0	HMC-W
					26	56	0	0	0	0	
					27	57	0	0	0	0	HMC COMPLETES BLOW
					28	58	0	0	0	0	
					29	59	0	0	0	0	

Additional info (include steam dissipation point)

S W47418

Observer's Signature

Chet Dulin

20071107 Method 9 Inspection Form.doc

OCS Environmental, Inc.
Method 9 VE Inspection Form

			Start	End
Date:	11-20-07			
Source:	#2 @BOPGCS (west)	Emissions color:	As noted	SAME
Observation Start Time:	10:00	Background:	Sky	
Observation End Time:	10:59	Sky Conditions:	Over cast	
Observer's Position:	SP 9	Wind Speed:	3	
Distance to source:	325 yds	Wind Direction:	NE	
Direction to source:	NE 100°	Ambient Temp:	47	
		Relative Humidity%:	96%	
Height of source:	190'	Wet Bulb Temp:	N/A	
Vertical angle to source:	9°			

Plume Type: Attached Detached None

Comments	0	15	30	45			0	15	30	45	Comments
	0	0	0	0	0	30	0	0	0	0	
	0	0	0	0	1	31	0	0	0	0	
	0	0	0	0	2	32	0	0	0	0	
	0	0	0	0	3	33	0	0	0	0	
	0	0	0	0	4	34	0	0	0	0	
	0	0	0	0	5	35	0	0	0	0	
	0	0	0	0	6	36	0	0	0	0	
	0	0	0	0	7	37	0	0	0	0	
	0	0	0	0	8	38	0	0	0	0	HMC-T
	0	0	0	0	9	39	0	0	0	0	
	0	0	0	0	10	40	0	0	0	0	HMC-COMP'T BLOW'T
	0	0	0	0	11	41	0	0	0	0	
TD-W	0	0	0	0	12	42	0	0	0	0	
	0	0	0	0	13	43	0	0	0	0	
	0	0	0	0	14	44	0	0	0	0	
	0	0	0	0	15	45	0	0	0	0	
SMC - T46396	0	0	0	0	16	46	0	0	0	0	
	0	0	0	0	17	47	0	0	0	0	
TAP-W	0	0	0	0	18	48	0	0	0	0	
	0	0	0	0	19	49	0	0	0	0	
	0	0	0	0	20	50	0	0	0	0	
	0	0	0	0	21	51	0	0	0	0	
	0	0	0	0	22	52	0	0	0	0	
	0	0	0	0	23	53	0	0	0	0	
	0	0	0	0	24	54	0	0	0	0	
	0	0	0	0	25	55	0	0	0	0	
	0	0	0	0	26	56	0	0	0	0	
	0	0	0	0	27	57	0	0	0	0	
	0	0	0	0	28	58	0	0	0	0	TD-T
	0	0	0	0	29	59	0	0	0	0	

Additional info (include steam dissipation point)

Observer's Signature: Chet Dulin

20071107 Method 9 Inspection Form.doc

OCS Environmental, Inc.
Method 9 VE Inspection Form

			Start	End
Date:	11-20-07	Emissions color:	AS NOTED	SAME
Source:	#2 BBOP BCS West	Background:	SKY	
Observation Start Time:	11:00	Sky Conditions:	OVERCAST	
Observation End Time:	11:49	Wind Speed:	3 MPH	
Observer's Position:	SP9	Wind Direction:	NE1	
Distance to source:	325 YDS	Ambient Temp:	47°	
Direction to source:	NE 100°	Relative Humidity%:	96%	
Height of source:	190'	Wet Bulb Temp:	N/A	
Vertical angle to source:	9°			

Plume Type: Attached Detached None

Comments	0	15	30	45			0	15	30	45	Comments
	0	0	0	0	0	30	0	0	0	0	
	0	0	0	0	1	31	0	0	0	0	TD-W
ReBlow-T	0	0	0	0	2	32	0	0	0	0	
	0	0	0	0	3	33	0	0	0	0	
	0	0	0	0	4	34	0	0	0	0	ReBlow W
TAP-T	0	0	0	0	5	35	0	0	0	0	
	0	0	0	0	6	36	0	0	0	0	
	0	0	0	0	7	37	0	0	0	0	TAP W
	0	0	0	0	8	38	0	0	0	0	
SMC-W 47419	0	0	0	0	9	39	0	0	0	0	
	0	0	0	0	10	40	0	0	0	0	
	0	0	0	0	11	41	0	0	0	0	
	0	0	0	0	12	42	0	0	0	0	
	0	0	0	0	13	43	0	0	0	0	
HMC-W	0	0	0	0	14	44	0	0	0	0	
HMC Complete	0	0	0	0	15	45	0	0	0	0	
Blow-W	0	0	0	0	16	46	0	0	0	0	
	0	0	0	0	17	47	0	0	0	0	
	0	0	0	0	18	48	0	0	0	0	
	0	0	0	0	19	49	0	0	0	0	
	0	0	0	0	20	50					END OBSERVATION
	0	0	0	0	21	51					
	0	0	0	0	22	52					
	0	0	0	0	23	53					
	0	0	0	0	24	54					
	0	0	0	0	25	55					
	0	0	0	0	26	56					
	0	0	0	0	27	57					
SMC-T	0	0	0	0	28	58					
	0	0	0	0	29	59					

Additional info (include steam dissipation point)

Observer's Signature: Chris Dubin

20071107 Method 9 Inspection Form.doc

OCS Environmental, Inc.
Method 9 Source Layout Sketch

Date: 11/20/07
Observer Name: Chet Dwin
Begin Time: 09:50 Time End: 11:49

No Sun Visible Times
10:00
10:30
11:00
11:30
11:49

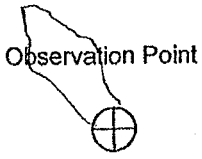

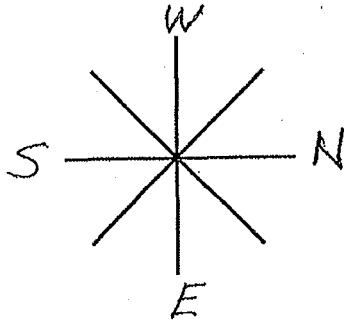

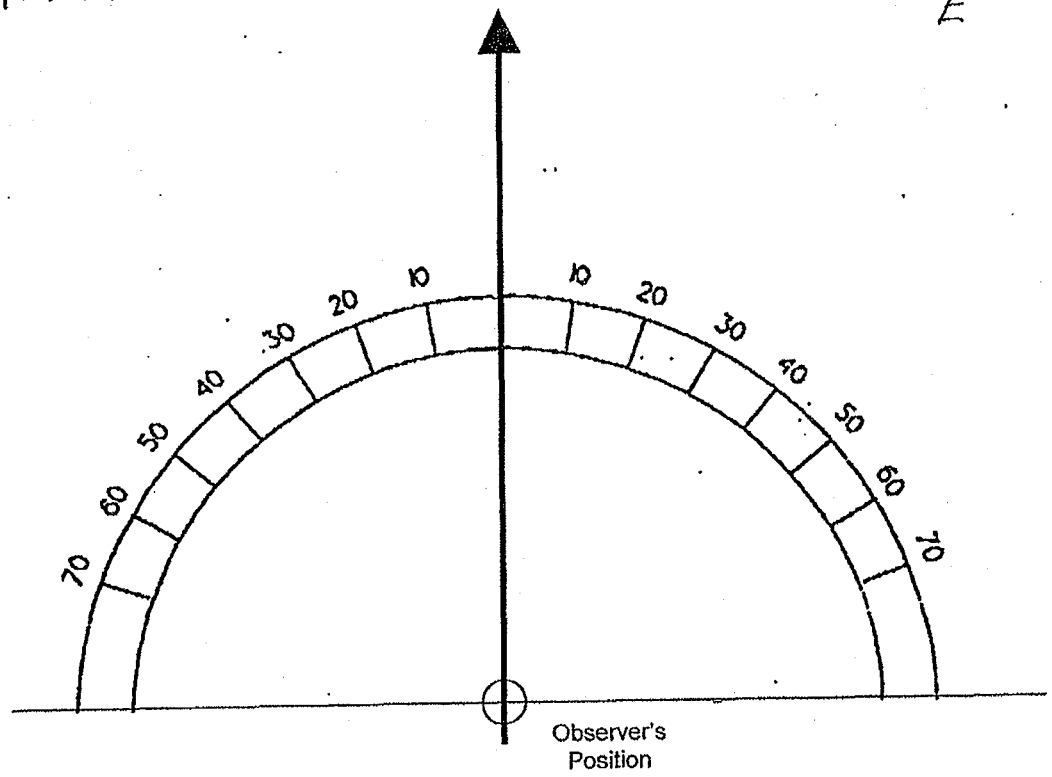

Signature: Chet Dwin

20071107 Method 9 Source Layout Sketch.doc

14-4

OCS Environmental, Inc.

U.S. Steel Gary Works
Emissions Inspection Summary

Date: 12 / 7 / 07

Start Time: 0710 (AM) / PM

End Time: 0910 (AM) / PM

No. 2 Precarbon ESP

BOP	Roof Monitor		Gas Cleaners	
(QBOP)	Roof Monitor		(Gas Cleaners)	
Blast Furnace	4	6	8	14
Blast Furnace Top	4	6	8	14

The following events or operations contributed to significant emissions:

Time	Heat/Cast Number	Operation	Comments
East STACK:	No Emissions	Observed	
West STACK:	No Emissions	Observed	

20071107 Inspection Summary.doc

OCS Environmental, Inc.
Method 9 VE Inspection Form

Date:	12-7-07
Source:	#20 Bop
Observation Start Time:	0710
Observation End Time:	0759
Observer's Position:	SP7
Distance to source:	350yds
Direction to source:	NW 160° mag North
Height of source:	190'
Vertical angle to source:	14°

	Start	End
Emissions color:	As Noted	Same
Background:	Sky	↓
Sky Conditions:	Overcast	↓
Wind Speed:	5	↓
Wind Direction:	SW	↓
Ambient Temp:	26°	↓
Relative Humidity%:	88	↓
Wet Bulb Temp:	–	↓

Plume Type: (Attached) Detached None

Comments	0	15	30	45			0	15	30	45	Comments
					0	30	0	0	0	0	East Stack
					1	31	0	0	0	0	y49296 SC
					2	32	0	0	0	0	
					3	33	0	0	0	0	
					4	34	0	0	0	0	Hm-y49296
					5	35	0	0	0	0	ReBlow-W49296
					6	36	0	0	0	0	Hm - y49296
					7	37	0	0	0	0	Top W 47628 HMC-y
					8	38	0	0	0	0	Blow y 49296
East Stack					9	39	0	0	0	0	
HM W47628	0	0	0	0	10	40	0	0	0	0	
HM C 3E47628	0	0	0	0	11	41	0	0	0	0	
Blow W 47628	0	0	0	0	12	42	0	0	0	0	
	0	0	0	0	13	43	0	0	0	0	
	0	0	0	0	14	44	0	0	0	0	
	0	0	0	0	15	45	0	0	0	0	
	0	0	0	0	16	46	0	0	0	0	
	0	0	0	0	17	47	0	0	0	0	
	0	0	0	0	18	48	0	0	0	0	
	0	0	0	0	19	49	0	0	0	0	
	0	0	0	0	20	50	0	0	0	0	
	0	0	0	0	21	51	0	0	0	0	
	0	0	0	0	22	52	0	0	0	0	TD y 49296
	0	0	0	0	23	53	0	0	0	0	
	0	0	0	0	24	54	0	0	0	0	
	0	0	0	0	25	55	0	0	0	0	
TD W47628	0	0	0	0	26	56	0	0	0	0	
	0	0	0	0	27	57	0	0	0	0	ReBlow y49296
	0	0	0	0	28	58	0	0	0	0	
	0	0	0	0	29	59	0	0	0	0	

Additional info (include steam dissipation point)

Observer's Signature: Kevin Davis

20071107 Method 9 Inspection Form.doc

OCS Environmental, Inc.
Method 9 VE Inspection Form

Date:	12-7-07
Source:	# 20 Bop
Observation Start Time:	0800
Observation End Time:	0859
Observer's Position:	SP7
Distance to source:	350yds
Direction to source:	NW 160° mag North
Height of source:	190'
Vertical angle to source:	14°

	Start	End
Emissions color:	As Noted	Same
Background:	Sky	↓
Sky Conditions:	Overcast	↓
Wind Speed:	5	↓
Wind Direction:	SW	↓
Ambient Temp:	26°	↓
Relative Humidity%:	88	↓
Wet Bulb Temp:	–	✓

Plume Type: Attached Detached None

Comments	0	15	30	45			0	15	30	45	Comments
	0	0	0	0	0	30	0	0	0	0	West STACK
Scrap W 47629	0	0	0	0	1	31	0	0	0	0	
Tap Y49296	0	0	0	0	2	32	0	0	0	0	
	0	0	0	0	3	33	0	0	0	0	
	0	0	0	0	4	34	0	0	0	0	Tap W47629
	0	0	0	0	5	35	0	0	0	0	
	0	0	0	0	6	36	0	0	0	0	
	0	0	0	0	7	37	0	0	0	0	
	0	0	0	0	8	38	0	0	0	0	
Hm W47629	0	0	0	0	9	39	0	0	0	0	
West STACK	0	0	0	0	10	40	0	0	0	0	
HMC/Blow W47629	0	0	0	0	11	41	0	0	0	0	
	0	0	0	0	12	42	0	0	0	0	
	0	0	0	0	13	43	0	0	0	0	
	0	0	0	0	14	44	0	0	0	0	
	0	0	0	0	15	45	0	0	0	0	
	0	0	0	0	16	46	0	0	0	0	
	0	0	0	0	17	47	0	0	0	0	Scrap Y49297
	0	0	0	0	18	48	0	0	0	0	
	0	0	0	0	19	49	0	0	0	0	
	0	0	0	0	20	50	0	0	0	0	
	0	0	0	0	21	51	0	0	0	0	
	0	0	0	0	22	52	0	0	0	0	
	0	0	0	0	23	53	0	0	0	0	
	0	0	0	0	24	54	0	0	0	0	Scrap W47630
	0	0	0	0	25	55	0	0	0	0	
TDW 47629	0	0	0	0	26	56	0	0	0	0	
	0	0	0	0	27	57	0	0	0	0	
	0	0	0	0	28	58	0	0	0	0	
	0	0	0	0	29	59	0	0	0	0	

Additional info (include steam dissipation point)

Observer's Signature: Kevin Davis

OCS Environmental, Inc.
Method 9 VE Inspection Form

Date:	12-7-07
Source:	#2 Bop
Observation Start Time:	0900
Observation End Time:	0909
Observer's Position:	SP7
Distance to source:	350yds
Direction to source:	NW 160°
	Mag North
Height of source:	190'
Vertical angle to source:	14°

	Start	End
Emissions color:	As Noted	Same
Background:	Sky	↓
Sky Conditions:	Overcast	↓
Wind Speed:	5	↓
Wind Direction:	SW	↓
Ambient Temp:	26°	↓
Relative Humidity%:	88	↓
Wet Bulb Temp:	–	✓

Plume Type: (Attached) Detached None

Comments	0	15	30	45			0	15	30	45	Comments
West Stack	0	0	0	0	0	30					
Hm y49297	0	0	0	0	1	31					
Hme y49297	0	0	0	0	2	32					
Blow y49297	0	0	0	0	3	33					
	0	0	0	0	4	34					
	0	0	0	0	5	35					
	0	0	0	0	6	36					
	0	0	0	0	7	37					
	0	0	0	0	8	38					
	0	0	0	0	9	39					
	0	0	0	0	10	40					
					11	41					
					12	42					
					13	43					
					14	44					
					15	45					
					16	46					
					17	47					
					18	48					
					19	49					
					20	50					
					21	51					
					22	52					
					23	53					
					24	54					
					25	55					
					26	56					
					27	57					
					28	58					
					29	59					

Additional info (include steam dissipation point)

Observer's Signature: Kevin Davis

20071107 Method 9 Inspection Form.doc

OCS Environmental, Inc.
Method 9 Source Layout Sketch

Date: 12 / 7 / 07

Observer Name: K. Davis

Begin Time: 0710

Time End: 0910

No Sun Visible Times
0710
0740
0810
0840

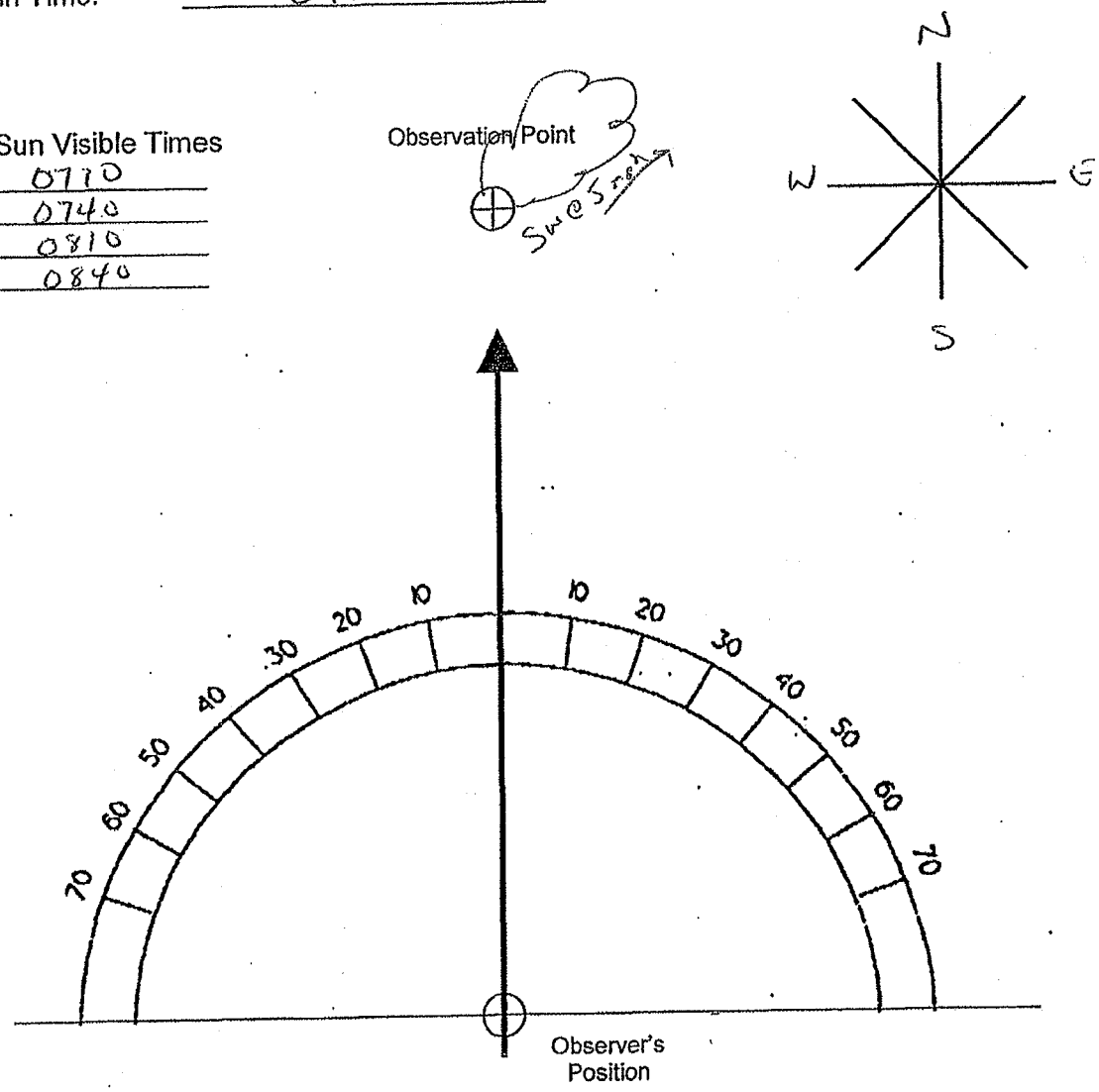

Signature: Kevin Davis

20071107 Method 9 Source Layout Sketch.doc

14-5

OCS Environmental, Inc.

U.S. Steel Gary Works
Emissions Inspection Summary

Date: 11/26/07

Start Time: 0700 (AM) / PM

End Time: 0946 (AM) / PM

No. 2 Precarbon ESP

BOP	Roof Monitor		Gas Cleaners	
QBOP	Roof Monitor		(Gas Cleaners)	
Blast Furnace	4	6	8	14
Blast Furnace Top	4	6	8	14

The following events or operations contributed to significant emissions:

Time	Heat/Cast Number	Operation	Comments

20071107 Inspection Summary.doc

OCS Environmental, Inc.
Method 9 VE Inspection Form

Date: 11/26/07
Source: QBOP-6cs
Observation Start Time: 0700
Observation End Time: 0800
Observer's Position: SP9
Distance to source: 325 yds
Direction to source: NE

Height of source: 190
Vertical angle to source: 9°

	Start	End
Emissions color:	As noted	Same
Background:	sky	
Sky Conditions:	Cloudy	
Wind Speed:	5	
Wind Direction:	SE	
Ambient Temp:	31	
Relative Humidity%:	90%	
Wet Bulb Temp:		

Plume Type: Attached Detached None

Comments	0	15	30	45			0	15	30	45	Comments
West stack	0	0	0	0	0	30	0	0	0	0	
	0	0	0	0	1	31	0	0	0	0	
	0	0	0	0	2	32	0	0	0	0	
	0	0	0	0	3	33	0	0	0	0	
	0	0	0	0	4	34	0	0	0	0	
	0	0	0	0	5	35	0	0	0	0	
	0	0	0	0	6	36	0	0	0	0	
	0	0	0	0	7	37	0	0	0	0	
	0	0	0	0	8	38	0	0	0	0	
	0	0	0	0	9	39	0	0	0	0	
	0	0	0	0	10	40	0	0	0	0	
	0	0	0	0	11	41	0	0	0	0	
	0	0	0	0	12	42	0	0	0	0	
	0	0	0	0	13	43	0	0	0	0	
	0	0	0	0	14	44	0	0	0	0	
East stack	0	0	0	0	15	45	0	0	0	0	
TD-Y	0	0	0	0	16	46	0	0	0	0	
	0	0	0	0	17	47	0	0	0	0	
	0	0	0	0	18	48	0	0	0	0	CS-T
re-blow-Y	0	0	0	0	19	49	0	0	0	0	
T-46453	0	0	0	0	20	50	0	0	0	0	
T-Y	0	0	0	0	21	51	0	0	0	0	
	0	0	0	0	22	52	0	0	0	0	
	0	0	0	0	23	53	0	0	0	0	
	0	0	0	0	24	54	0	0	0	0	
	0	0	0	0	25	55	0	0	0	0	
	0	0	0	0	26	56	0	0	0	0	
	0	0	0	0	27	57	0	0	0	0	
	0	0	0	0	28	58	0	0	0	0	
	0	0	0	0	29	59	0	0	0	0	

Additional info (include steam dissipation point)

Observer's Signature: Clarence Patterson

OCS Environmental, Inc.
Method 9 VE Inspection Form

Date: 11/26/07
Source: Q-Boo-GCs
Observation Start Time: 0800
Observation End Time: 0900
Observer's Position: SP9
Distance to source: 325
Direction to source: NE

Height of source: 190
Vertical angle to source: 90

	Start	End
Emissions color:	As noted	Same
Background:	sky	
Sky Conditions:	cloudy	
Wind Speed:	5	
Wind Direction:	SE	
Ambient Temp:	31	
Relative Humidity%:	90%	
Wet Bulb Temp:		

Plume Type: Attached Detached None

Comments	0	15	30	45			0	15	30	45	Comments
	0	0	0	0	0	30	0	0	0	0	
	0	0	0	0	1	31	0	0	0	0	
	0	0	0	0	2	32	0	0	0	0	
	0	0	0	0	3	33	0	0	0	0	re-blow-T
	0	0	0	0	4	34	0	0	0	0	
	0	0	0	0	5	35	0	0	0	0	
	0	0	0	0	6	36	0	0	0	0	T-T
	0	0	0	0	7	37	0	0	0	0	
CHM-T	0	0	0	0	8	38	0	0	0	0	
	0	0	0	0	9	39	0	0	0	0	
	0	0	0	0	10	40	0	0	0	0	
	0	0	0	0	11	41	0	0	0	0	
HMCC-T B-T	0	0	0	0	12	42	0	0	0	0	
	0	0	0	0	13	43	0	0	0	0	
	0	0	0	0	14	44	0	0	0	0	
	0	0	0	0	15	45	0	0	0	0	
	0	0	0	0	16	46	0	0	0	0	
	0	0	0	0	17	47	0	0	0	0	
	0	0	0	0	18	48	0	0	0	0	
	0	0	0	0	19	49	0	0	0	0	
	0	0	0	0	20	50	0	0	0	0	
	0	0	0	0	21	51	0	0	0	0	
	0	0	0	0	22	52	0	0	0	0	
	0	0	0	0	23	53	0	0	0	0	CS-T 46454
	0	0	0	0	24	54	0	0	0	0	
	0	0	0	0	25	55	0	0	0	0	
	0	0	0	0	26	56	0	0	0	0	
	0	0	0	0	27	57	0	0	0	0	
TO-T	0	0	0	0	28	58	0	0	0	0	
	0	0	0	0	29	59	0	0	0	0	

Additional info (include steam dissipation point)

Observer's Signature: Laurence Patterson

20071107 Method 9 Inspection Form.doc

OCS Environmental, Inc.
Method 9 VE Inspection Form

Date: 11/26/07
Source: Q-Bop-GCS
Observation Start Time: 0900
Observation End Time: 0946
Observer's Position: SP9
Distance to source: 325
Direction to source: NE

Height of source: 190
Vertical angle to source: 9°

	Start	End
Emissions color:	As noted	Same
Background:	sky	
Sky Conditions:	cloudy	
Wind Speed:	5	
Wind Direction:	SE	
Ambient Temp:	31	
Relative Humidity%:	90%	
Wet Bulb Temp:		

Plume Type: (Attached) Detached None

Comments	0	15	30	45			0	15	30	45	Comments
	0	0	0	0	0	30	0	0	0	0	
	0	0	0	0	1	31	0	0	0	0	
	0	0	0	0	2	32	0	0	0	0	
	0	0	0	0	3	33	0	0	0	0	
	0	0	0	0	4	34	0	0	0	0	
	0	0	0	0	5	35	0	0	0	0	
	0	0	0	0	6	36	0	0	0	0	TD-T
	0	0	0	0	7	37	0	0	0	0	
	0	0	0	0	8	38	0	0	0	0	
	0	0	0	0	9	39	0	0	0	0	
	0	0	0	0	10	40	0	0	0	0	
	0	0	0	0	11	41	0	0	0	0	reblow-T
	0	0	0	0	12	42	0	0	0	0	
	0	0	0	0	13	43	0	0	0	0	
	0	0	0	0	14	44	0	0	0	0	T-T
	0	0	0	0	15	45	0	0	0	0	
	0	0	0	0	16	46	0	0	0	0	End
	0	0	0	0	17	47					
	0	0	0	0	18	48					
CHM-T	0	0	0	0	19	49					
	0	0	0	0	20	50					
HMCC-T B-T	0	0	0	0	21	51					
	0	0	0	0	22	52					
	0	0	0	0	23	53					
	0	0	0	0	24	54					
	0	0	0	0	25	55					
	0	0	0	0	26	56					
	0	0	0	0	27	57					
	0	0	0	0	28	58					
	0	0	0	0	29	59					

Additional info (include steam dissipation point)

Observer's Signature: Clarence Patterson

20071107 Method 9 Inspection Form.doc

OCS Environmental, Inc.
Method 9 Source Layout Sketch

Date: 11 / 26 / 07

Observer Name: Clarence Patterson

Begin Time: 0700

Time End: 0946

No Sun Visible Times

0700
0730
0800 0830
0900 0930

Observation Point

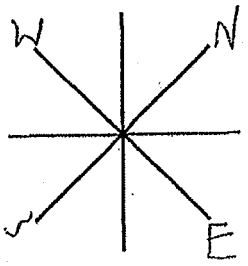

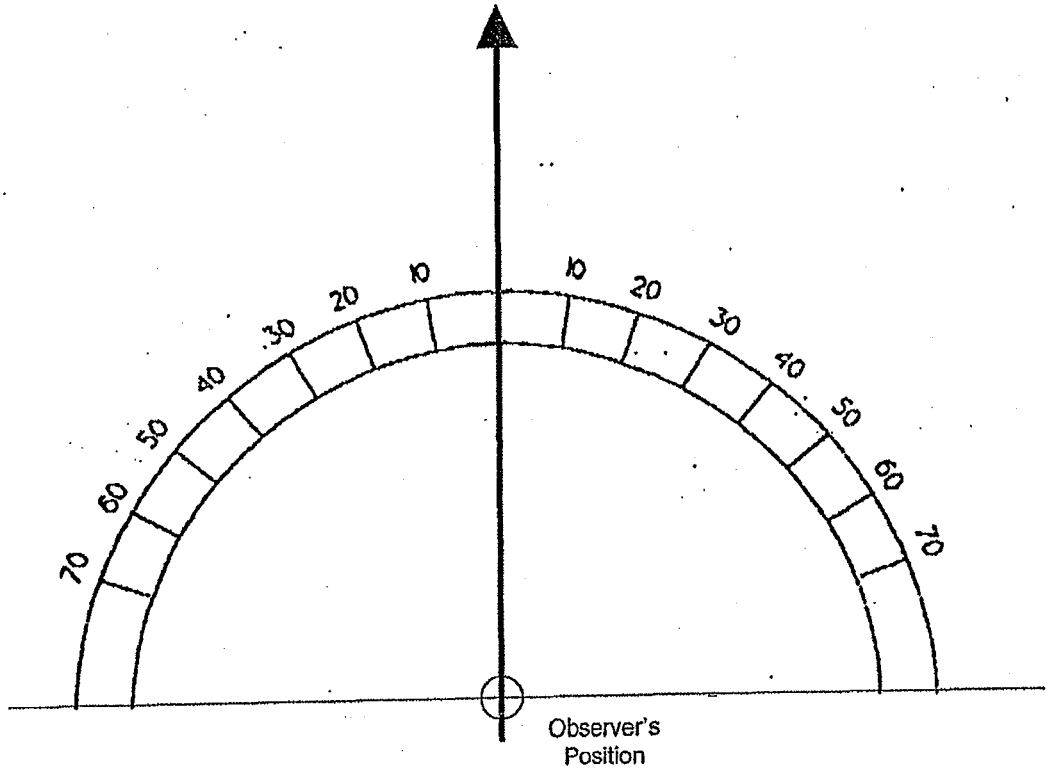

Signature: Clarence Patterson

20071107 Method 9 Source Layout Sketch.doc

14-6

OCS Environmental, Inc.

U.S. Steel Gary Works
Emissions Inspection Summary

Date: 11/13/07

Start Time: 0700 AM / PM

End Time: 0900 AM / PM

No. 2 Precarbon ESP

BOP	Roof Monitor		Gas Cleaners	
QBOP	Roof Monitor		Gas Cleaners	
Blast Furnace	4	6	8	14
Blast Furnace Top	4	6	8	14

The following events or operations contributed to significant emissions:

Time	Heat/Cast Number	Operation	Comments
	No excessive emissions observed		

20071107 Inspection Summary.doc

OCS Environmental, Inc.
Method 9 VE Inspection Form

Page 1 of 2

			Start	End
Date:	11-13-07			
Source:	9 Bop GCS	Emissions color:	As Noted	same
Observation Start Time:	0700	Background:	Sky	
Observation End Time:	0759	Sky Conditions:	Clear	
Observer's Position:	SP7	Wind Speed:	2	
Distance to source:	350 yds	Wind Direction:	E	
Direction to source:	NW 160°	Ambient Temp:	38°	
		Relative Humidity%:	100%	
Height of source:	190'	Wet Bulb Temp:	N/A	
Vertical angle to source:	39°			

Plume Type: Attached Detached None

Comments	0	15	30	45			0	15	30	45	Comments
west stack	0	0	0	0	0	30	0	0	0	0	
	0	0	0	0	1	31	0	0	0	0	
	0	0	0	0	2	32	0	0	0	0	
	0	0	0	0	3	33	0	0	0	0	
	0	0	0	0	4	34	0	0	0	0	
	0	0	0	0	5	35	0	0	0	0	
	0	0	0	0	6	36	0	0	0	0	
	0	0	0	0	7	37	0	0	0	0	
	0	0	0	0	8	38	0	0	0	0	
	0	0	0	0	9	39	0	0	0	0	
	0	0	0	0	10	40	0	0	0	0	
	0	0	0	0	11	41	0	0	0	0	
	0	0	0	0	12	42	0	0	0	0	
	0	0	0	0	13	43	0	0	0	0	
	0	0	0	0	14	44	0	0	0	0	
	0	0	0	0	15	45	0	0	0	0	
	0	0	0	0	16	46	0	0	0	0	
	0	0	0	0	17	47	0	0	0	0	
	0	0	0	0	18	48	0	0	0	0	
	0	0	0	0	19	49	0	0	0	0	
	0	0	0	0	20	50	0	0	0	0	
	0	0	0	0	21	51	0	0	0	0	
	0	0	0	0	22	52	0	0	0	0	
	0	0	0	0	23	53	0	0	0	0	
	0	0	0	0	24	54	0	0	0	0	
	0	0	0	0	25	55	0	0	0	0	
	0	0	0	0	26	56	0	0	0	0	
	0	0	0	0	27	57	0	0	0	0	
	0	0	0	0	28	58	0	0	0	0	
	0	0	0	0	29	59	0	0	0	0	

Additional Info (include steam dissipation point)

Observer's Signature

20071107 Method 9 Inspection Form.doc

OCS Environmental, Inc.
Method 9 VE Inspection Form

			Start	End
Date:	11-13-07	Emissions color:	As Notes	same
Source:	Q Bop GCS	Background:	sky	
Observation Start Time:	0800	Sky Conditions:	clear	
Observation End Time:	0859	Wind Speed:	2	
Observer's Position:	SPT	Wind Direction:	E	
Distance to source:	350 yds	Ambient Temp:	38°	
Direction to source:	NNE 160°	Relative Humidity%:	100%	
Height of source:	190'	Wet Bulb Temp:	N/A	
Vertical angle to source:	14°			

Plume Type: Attached Detached None

Comments	0	15	30	45			0	15	30	45	Comments
East Stack	0	0	0	0	0	30	0	0	0	0	
	0	0	0	0	1	31	0	0	0	0	
	0	0	0	0	2	32	0	0	0	0	
	0	0	0	0	3	33	0	0	0	0	
	0	0	0	0	4	34	0	0	0	0	
	0	0	0	0	5	35	0	0	0	0	
	0	0	0	0	6	36	0	0	0	0	
	0	0	0	0	7	37	0	0	0	0	
	0	0	0	0	8	38	0	0	0	0	
	0	0	0	0	9	39	0	0	0	0	
	0	0	0	0	10	40	0	0	0	0	
	0	0	0	0	11	41	0	0	0	0	
	0	0	0	0	12	42	0	0	0	0	
	0	0	0	0	13	43	0	0	0	0	
	0	0	0	0	14	44	0	0	0	0	
	0	0	0	0	15	45	0	0	0	0	
	0	0	0	0	16	46	0	0	0	0	
	0	0	0	0	17	47	0	0	0	0	
	0	0	0	0	18	48	0	0	0	0	
	0	0	0	0	19	49	0	0	0	0	
	0	0	0	0	20	50	0	0	0	0	
	0	0	0	0	21	51	0	0	0	0	
	0	0	0	0	22	52	0	0	0	0	
	0	0	0	0	23	53	0	0	0	0	
	0	0	0	0	24	54	0	0	0	0	
	0	0	0	0	25	55	0	0	0	0	
	0	0	0	0	26	56	0	0	0	0	
	0	0	0	0	27	57	0	0	0	0	
	0	0	0	0	28	58	0	0	0	0	
	0	0	0	0	29	59	0	0	0	0	

Additional info (include steam dissipation point)

Observer's Signature

20071107 Method 9 Inspection Form.doc

OCS Environmental, Inc.
Method 9 Source Layout Sketch

Date: 11/13/07

Observer Name: R. Mackey

Begin Time: 0700 Time End: 0900

No Sun Visible Times

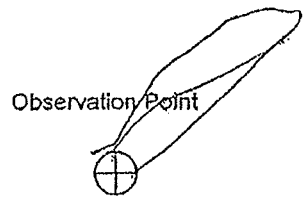

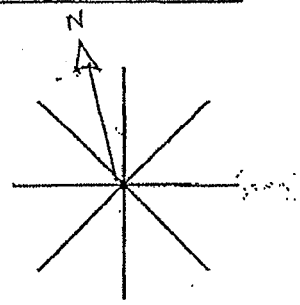

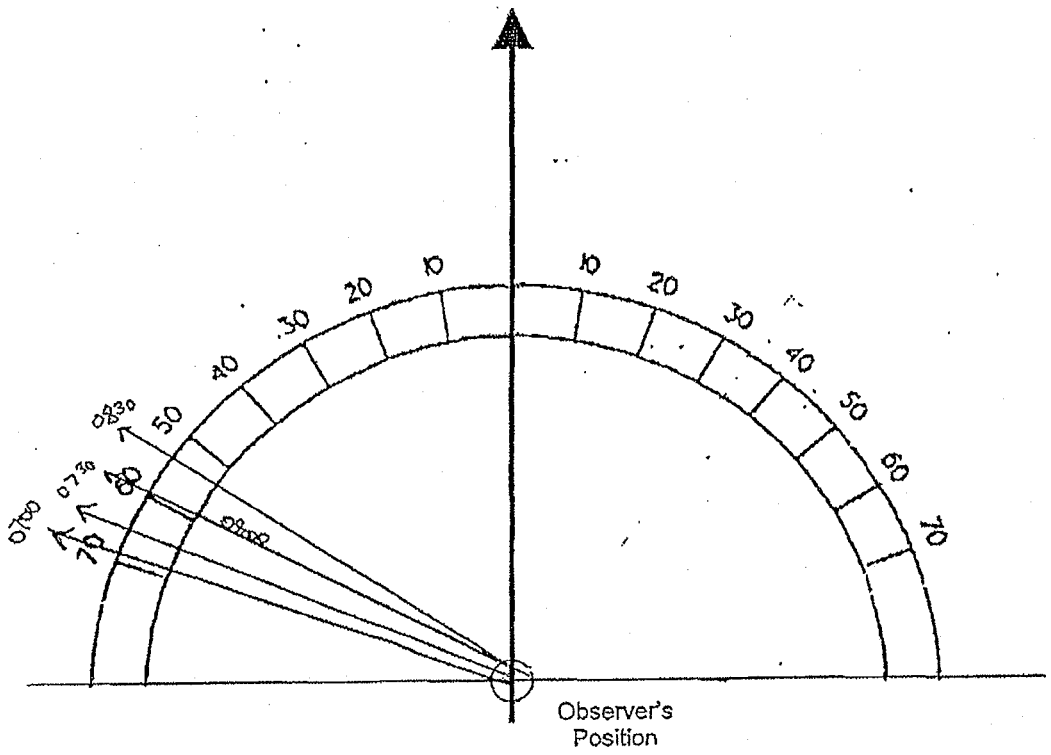

Signature: RJ Mackey

20071107 Method 9 Source Layout Sketch.doc

14-7

OCS Environmental, Inc.

U.S. Steel Gary Works
Emissions Inspection Summary

Date: 11 / 29 / 07

Start Time: 0700 (AM) / PM

End Time: 0900 (AM) / PM

No. 2 Precarbon ESP

BOP	Roof Monitor		Gas Cleaners	
(QBOP)	Roof Monitor		(Gas Cleaners) East STACK	
Blast Furnace	4	6	8	14
Blast Furnace Top	4	6	8	14

The following events or operations contributed to significant emissions:

Time	Heat/Cast Number	Operation	Comments
East STACK: No Emissions Observed			

20071107 Inspection Summary.doc

OCS Environmental, Inc.
Method 9 VE Inspection Form

Page 1 of 2

			Start	End
Date:	11-29-07			
Source:	#2 Bop East STACK	Emissions color:	As Noted	Same
Observation Start Time:	0700	Background:	Sky	
Observation End Time:	0759	Sky Conditions:	Pt Sunny	
Observer's Position:	SP9	Wind Speed:	9	
Distance to source:	325yds	Wind Direction:	NW	
Direction to source:	NE 100° mag North	Ambient Temp:	18°	
		Relative Humidity%:	68%	
Height of source:	190'	Wet Bulb Temp:	—	✓
Vertical angle to source:	9°			

Plume Type: (Attached) Detached None

Comments	0	15	30	45			0	15	30	45	Comments
T46476	0	0	0	0	0	30	0	0	0	0	East STACK
East STACK	0	0	0	0	1	31	0	0	0	0	
	0	0	0	0	2	32	0	0	0	0	
SCMP T46476	0	0	0	0	3	33	0	0	0	0	
	0	0	0	0	4	34	0	0	0	0	ReBlow T46476
	0	0	0	0	5	35	0	0	0	0	Tap T46476
	0	0	0	0	6	36	0	0	0	0	
	0	0	0	0	7	37	0	0	0	0	
	0	0	0	0	8	38	0	0	0	0	
	0	0	0	0	9	39	0	0	0	0	
	0	0	0	0	10	40	0	0	0	0	
HM T46476	0	0	0	0	11	41	0	0	0	0	
	0	0	0	0	12	42	0	0	0	0	
HMC T46476	0	0	0	0	13	43	0	0	0	0	
Blow T46476	0	0	0	0	14	44	0	0	0	0	
	0	0	0	0	15	45	0	0	0	0	
	0	0	0	0	16	46	0	0	0	0	
	0	0	0	0	17	47	0	0	0	0	
	0	0	0	0	18	48	0	0	0	0	
	0	0	0	0	19	49	0	0	0	0	
	0	0	0	0	20	50	0	0	0	0	
	0	0	0	0	21	51	0	0	0	0	
	0	0	0	0	22	52	0	0	0	0	Scmp T46477
	0	0	0	0	23	53	0	0	0	0	
	0	0	0	0	24	54	0	0	0	0	
	0	0	0	0	25	55	0	0	0	0	
	0	0	0	0	26	56	0	0	0	0	
	0	0	0	0	27	57	0	0	0	0	
	0	0	0	0	28	58	0	0	0	0	
TD T46476	0	0	0	0	29	59	0	0	0	0	

Additional Info (Include steam dissipation point)

Observer's Signature: Kevin Davis

20071107 Method 9 Inspection Form.doc

OCS Environmental, Inc.
Method 9 VE Inspection Form

			Start	End
Date:	11-29-07			
Source:	#2 Blow East STACK	Emissions color:	As Noted	Same
Observation Start Time:	0800	Background:	Sky	
Observation End Time:	0859	Sky Conditions:	Pt. Sunny	
Observer's Position:	SPG	Wind Speed:	9	
Distance to source:	325 yds	Wind Direction:	NW	
Direction to source:	NE 100°	Ambient Temp:	18°	
	MAG North	Relative Humidity%:	68%	
Height of source:	190'	Wet Bulb Temp:	–	✓
Vertical angle to source:	9°			

Plume Type: Attached Detached None

East STACK

Comments	0	15	30	45			0	15	30	45	Comments
HFM T46477	0	0	0	0	0	30	0	0	0	0	EAST STACK
	0	0	0	0	1	31	0	0	0	0	
HMP T46477	0	0	0	0	2	32	0	0	0	0	
Blow T46477	0	0	0	0	3	33	0	0	0	0	
	0	0	0	0	4	34	0	0	0	0	
	0	0	0	0	5	35	0	0	0	0	
	0	0	0	0	6	36	0	0	0	0	
	0	0	0	0	7	37	0	0	0	0	
	0	0	0	0	8	38	0	0	0	0	
	0	0	0	0	9	39	0	0	0	0	
	0	0	0	0	10	40	0	0	0	0	
	0	0	0	0	11	41	0	0	0	0	
	0	0	0	0	12	42	0	0	0	0	
	0	0	0	0	13	43	0	0	0	0	
	0	0	0	0	14	44	0	0	0	0	
	0	0	0	0	15	45	0	0	0	0	
	0	0	0	0	16	46	0	0	0	0	
	0	0	0	0	17	47	0	0	0	0	
TD T46477	0	0	0	0	18	48	0	0	0	0	
	0	0	0	0	19	49	0	0	0	0	
	0	0	0	0	20	50	0	0	0	0	Scrap T46478
	0	0	0	0	21	51	0	0	0	0	
	0	0	0	0	22	52	0	0	0	0	
	0	0	0	0	23	53	0	0	0	0	
ReBlow T46477	0	0	0	0	24	54	0	0	0	0	
Top T46477	0	0	0	0	25	55	0	0	0	0	
	0	0	0	0	26	56	0	0	0	0	
	0	0	0	0	27	57	0	0	0	0	
	0	0	0	0	28	58	0	0	0	0	
	0	0	0	0	29	59	0	0	0	0	

Additional info (include steam dissipation point)

Observer's Signature: Kevin Davis

OCS Environmental, Inc.
Method 9 Source Layout Sketch

Date: 11 / 29 / 07

Observer Name: K. Davis

Begin Time: 0700 Time End: 0900

No Sun Visible Times
0700

Observation Point

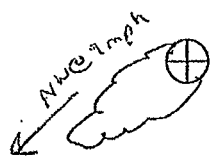

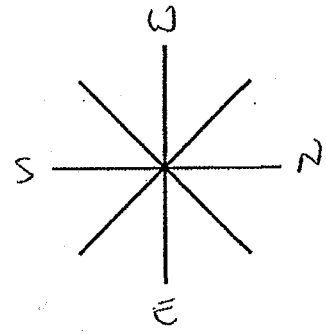

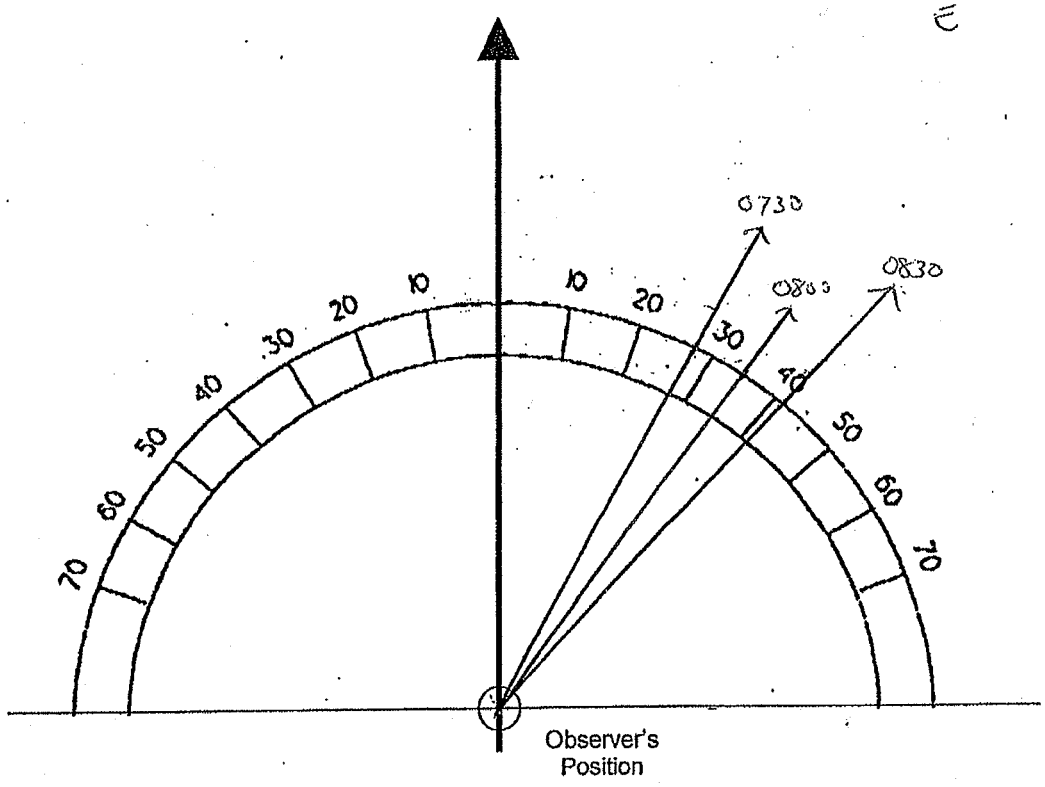

Signature: Kevin Davis

20071107 Method 9 Source Layout Sketch.doc

14-8

OCS Environmental, Inc.

U.S. Steel Gary Works
Emissions Inspection Summary

Date: 12/04/07

Start Time: 0700 AM / PM

End Time: 0859 AM / PM

No. 2 Precarbon ESP

BOP	Roof Monitor		Gas Cleaners	
QBOP	Roof Monitor		Gas Cleaners	
Blast Furnace	4	6	8	14
Blast Furnace Top	4	6	8	14

The following events or operations contributed to significant emissions:

Time	Heat/Cast Number	Operation	Comments

20071107 Inspection Summary.doc

OCS Environmental, Inc.
Method 9 VE Inspection Form

Page 1 of 2

			Start	End
Date:	12-04-07	Emissions color:	HS NOTE	
Source:	#2 BOP 6CS-West-Q	Background:	SKY	SAME
Observation Start Time:	0700	Sky Conditions:	CLDY	
Observation End Time:	0759	Wind Speed:	7-9	
Observer's Position:	SP9	Wind Direction:	NNE	
Distance to source:	325 YDS	Ambient Temp:	28-37	
Direction to source:	SW	Relative Humidity%:	70%	
Height of source:	190'	Wet Bulb Temp:	—	
Vertical angle to source:	9°			

Plume Type: Attached Detached None

Comments	0	15	30	45			0	15	30	45	Comments
BIP	0	0	0	0	0	30	0	0	0	0	
	0	0	0	0	1	31	0	0	0	0	
	0	0	0	0	2	32	0	0	0	0	
	0	0	0	0	3	33	0	0	0	0	SC-W 47589
	0	0	0	0	4	34	0	0	0	0	
	0	0	0	0	5	35	0	0	0	0	
	0	0	0	0	6	36	0	0	0	0	
	0	0	0	0	7	37	0	0	0	0	
	0	0	0	0	8	38	0	0	0	0	
	0	0	0	0	9	39	0	0	0	0	HMC-W
TD-Y	0	0	0	0	10	40	0	0	0	0	
	0	0	0	0	11	41	0	0	0	0	
	0	0	0	0	12	42	0	0	0	0	END HMC-BLOW
	0	0	0	0	13	43	0	0	0	0	
	0	0	0	0	14	44	0	0	0	0	
RB-Y	0	0	0	0	15	45	0	0	0	0	
	0	0	0	0	16	46	0	0	0	0	
	0	0	0	0	17	47	0	0	0	0	
TAP-Y	0	0	0	0	18	48	0	0	0	0	
	0	0	0	0	19	49	0	0	0	0	
	0	0	0	0	20	50	0	0	0	0	
	0	0	0	0	21	51	0	0	0	0	
	0	0	0	0	22	52	0	0	0	0	
	0	0	0	0	23	53	0	0	0	0	
	0	0	0	0	24	54	0	0	0	0	
	0	0	0	0	25	55	0	0	0	0	
	0	0	0	0	26	56	0	0	0	0	
	0	0	0	0	27	57	0	0	0	0	
	0	0	0	0	28	58	0	0	0	0	TD-W
	0	0	0	0	29	59	0	0	0	0	

Additional Info (include steam dissipation point)
Y-49272
W-47589

Observer's Signature

20071107 Method 9 Inspection Form.doc

OCS Environmental, Inc.
Method 9 VE Inspection Form

Date: 12-04-07
Source: +2Q BOP 6CS-EAST
Observation Start Time: 0800
Observation End Time: 0859
Observer's Position: SP9
Distance to source: 325 yds
Direction to source: SW

Height of source: 190'
Vertical angle to source: 90°

	Start	End
Emissions color:	HS Notey	
Background:	Sky	Same
Sky Conditions:	CCDY	
Wind Speed:	2-9	
Wind Direction:	N-NE	
Ambient Temp:	28-32	
Relative Humidity%:	70%	
Wet Bulb Temp:	—	

Plume Type: Attached Detached None

Comments	0	15	30	45			0	15	30	45	Comments
	0	0	0	0	0	30	0	0	0	0	
	0	0	0	0	1	31	0	0	0	0	
	0	0	0	0	2	32	0	0	0	0	
	0	0	0	0	3	33	0	0	0	0	
AB-W	0	0	0	0	4	34	0	0	0	0	TD-Y
	0	0	0	0	5	35	0	0	0	0	
	0	0	0	0	6	36	0	0	0	0	
	0	0	0	0	7	37	0	0	0	0	RB-Y
	0	0	0	0	8	38	0	0	0	0	
	0	0	0	0	9	39	0	0	0	0	
SC-Y	0	0	0	0	10	40	0	0	0	0	TAP-Y
	0	0	0	0	11	41	0	0	0	0	
	0	0	0	0	12	42	0	0	0	0	
	0	0	0	0	13	43	0	0	0	0	
	0	0	0	0	14	44	0	0	0	0	
	0	0	0	0	15	45	0	0	0	0	
HMC-Y	0	0	0	0	16	46	0	0	0	0	
	0	0	0	0	17	47	0	0	0	0	SC-W
END HMC-BLOW	0	0	0	0	18	48	0	0	0	0	
	0	0	0	0	19	49	0	0	0	0	
	0	0	0	0	20	50	0	0	0	0	
	0	0	0	0	21	51	0	0	0	0	
	0	0	0	0	22	52	0	0	0	0	
	0	0	0	0	23	53	0	0	0	0	HMC-W
	0	0	0	0	24	54	0	0	0	0	
	0	0	0	0	25	55	0	0	0	0	
	0	0	0	0	26	56	0	0	0	0	END HMC-BLOW
	0	0	0	0	27	57	0	0	0	0	
	0	0	0	0	28	58	0	0	0	0	
	0	0	0	0	29	59	0	0	0	0	

Additional info (include steam dissipation point)

Observer's Signature [signature]

20071107 Method 9 Inspection Form.doc

OCS Environmental, Inc.
Method 9 Source Layout Sketch

Date: 12 10/1 07

Observer Name: J. SKALIK

Begin Time: 0700

Time End: 0859

No Sun Visible Times
0700
0800

Observation Point

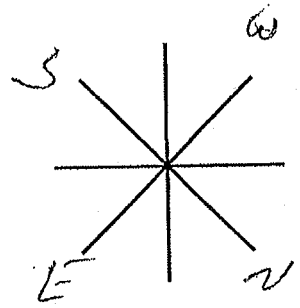

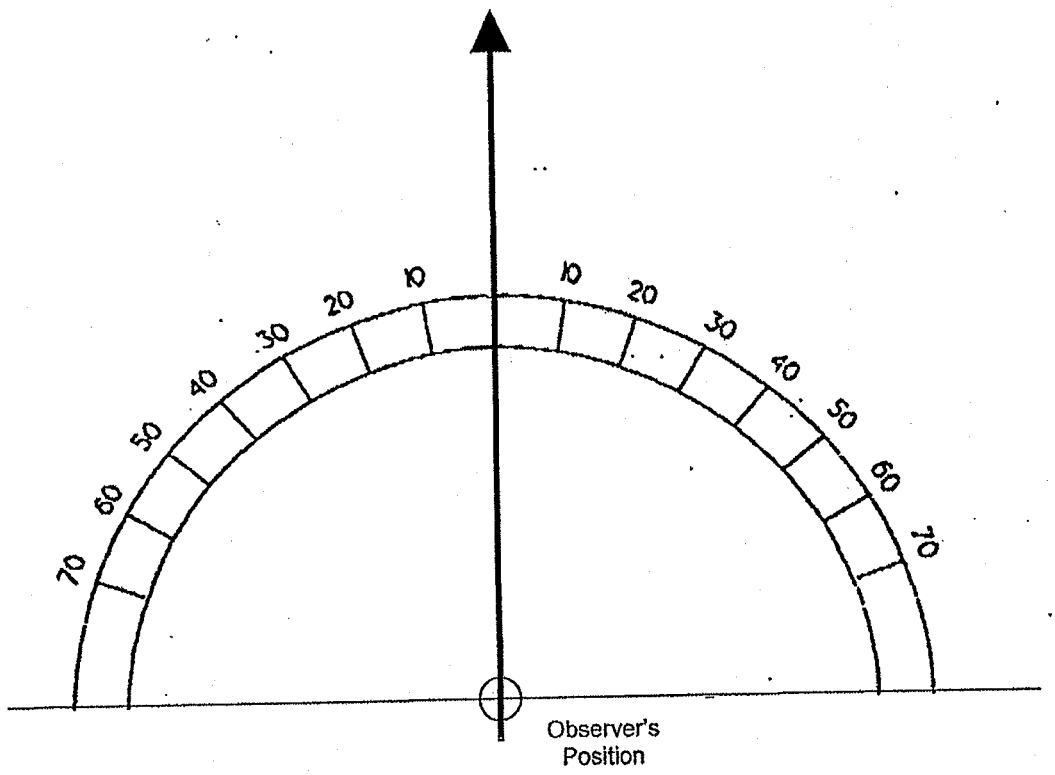

Signature:

20071107 Method 9 Source Layout Sketch.doc

14-9

OCS Environmental, Inc.

U.S. Steel Gary Works
Emissions Inspection Summary

Date: 11 / 9 / 07

Start Time: 0700 AM / PM

End Time: 0900 AM / PM

No. 2 Precarbon ESP

BOP	Roof Monitor		Gas Cleaners	
QBOP	Roof Monitor		Gas Cleaners	
Blast Furnace	4	6	8	14
Blast Furnace Top	4	6	8	14

The following events or operations contributed to significant emissions:

Time	Heat/Cast Number	Operation	Comments

20071107 Inspection Summary.doc

OCS Environmental, Inc.
Method 9 VE Inspection Form

Page 1 of 2

Date: 11/9/07
Source: QBOP GC
Observation Start Time: 0700
Observation End Time: 0800
Observer's Position: SP9
Distance to source: 325
Direction to source: NE

Height of source: 185
Vertical angle to source: 9

	Start	End
Emissions color:	As noted	Same
Background:	sky	
Sky Conditions:	cloudy	
Wind Speed:	4	
Wind Direction:	NW	
Ambient Temp:	35	
Relative Humidity%:	89	
Wet Bulb Temp:		

Plume Type: Attached Detached None

Comments	0	15	30	45			0	15	30	45	Comments
West	0	0	0	0	0	30	0	0	0	0	
	0	0	0	0	1	31	0	0	0	0	
	0	0	0	0	2	32	0	0	0	0	
	0	0	0	0	3	33	0	0	0	0	
	0	0	0	0	4	34	0	0	0	0	
	0	0	0	0	5	35	0	0	0	0	
	0	0	0	0	6	36	0	0	0	0	
	0	0	0	0	7	37	0	0	0	0	
	0	0	0	0	8	38	0	0	0	0	
	0	0	0	0	9	39	0	0	0	0	
	0	0	0	0	10	40	0	0	0	0	
	0	0	0	0	11	41	0	0	0	0	
	0	0	0	0	12	42	0	0	0	0	
	0	0	0	0	13	43	0	0	0	0	
	0	0	0	0	14	44	0	0	0	0	
	0	0	0	0	15	45	0	0	0	0	
	0	0	0	0	16	46	0	0	0	0	
	0	0	0	0	17	47	0	0	0	0	
	0	0	0	0	18	48	0	0	0	0	
	0	0	0	0	19	49	0	0	0	0	
	0	0	0	0	20	50	0	0	0	0	
	0	0	0	0	21	51	0	0	0	0	
	0	0	0	0	22	52	0	0	0	0	
	0	0	0	0	23	53	0	0	0	0	
	0	0	0	0	24	54	0	0	0	0	
	0	0	0	0	25	55	0	0	0	0	
	0	0	0	0	26	56	0	0	0	0	
	0	0	0	0	27	57	0	0	0	0	
	0	0	0	0	28	58	0	0	0	0	
	0	0	0	0	29	59	0	0	0	0	

Additional info (include steam dissipation point)

Observer's Signature: [signature]

20071107 Method 9 Inspection Form.doc

OCS Environmental, Inc.
Method 9 VE Inspection Form

Date: 11/9/07
Source: Qboe Gen
Observation Start Time: 0800
Observation End Time: 0900
Observer's Position: SP9
Distance to source: 325
Direction to source: NE

Height of source: 185
Vertical angle to source: 9

	Start	End
Emissions color:	As noted	Same
Background:	sky	
Sky Conditions:	Cloudy	
Wind Speed:	4	
Wind Direction:	NW	
Ambient Temp:	35	
Relative Humidity%:	89	
Wet Bulb Temp:		

Plume Type: Attached Detached None

Comments	0	15	30	45			0	15	30	45	Comments
East	0	0	0	0	0	30	0	0	0	0	
	0	0	0	0	1	31	0	0	0	0	
	0	0	0	0	2	32	0	0	0	0	
	0	0	0	0	3	33	0	0	0	0	
	0	0	0	0	4	34	0	0	0	0	
	0	0	0	0	5	35	0	0	0	0	
	0	0	0	0	6	36	0	0	0	0	
	0	0	0	0	7	37	0	0	0	0	
	0	0	0	0	8	38	0	0	0	0	
	0	0	0	0	9	39	0	0	0	0	
	0	0	0	0	10	40	0	0	0	0	
	0	0	0	0	11	41	0	0	0	0	
	0	0	0	0	12	42	0	0	0	0	
	0	0	0	0	13	43	0	0	0	0	
	0	0	0	0	14	44	0	0	0	0	
	0	0	0	0	15	45	0	0	0	0	
	0	0	0	0	16	46	0	0	0	0	
	0	0	0	0	17	47	0	0	0	0	
	0	0	0	0	18	48	0	0	0	0	
	0	0	0	0	19	49	0	0	0	0	
	0	0	0	0	20	50	0	0	0	0	
	0	0	0	0	21	51	0	0	0	0	
	0	0	0	0	22	52	0	0	0	0	
	0	0	0	0	23	53	0	0	0	0	
	0	0	0	0	24	54	0	0	0	0	
	0	0	0	0	25	55	0	0	0	0	
	0	0	0	0	26	56	0	0	0	0	
	0	0	0	0	27	57	0	0	0	0	
	0	0	0	0	28	58	0	0	0	0	
	0	0	0	0	29	59	0	0	0	0	

Additional info (include steam dissipation point)

Observer's Signature: Clarence Patterson

20071107 Method 9 Inspection Form.doc

OCS Environmental, Inc.
Method 9 Source Layout Sketch

Date: 11, 9, 07

Observer Name: Clarence Patterson

Begin Time: 0700 Time End: 0900

No Sun Visible Times
0700
0730
0900
0930

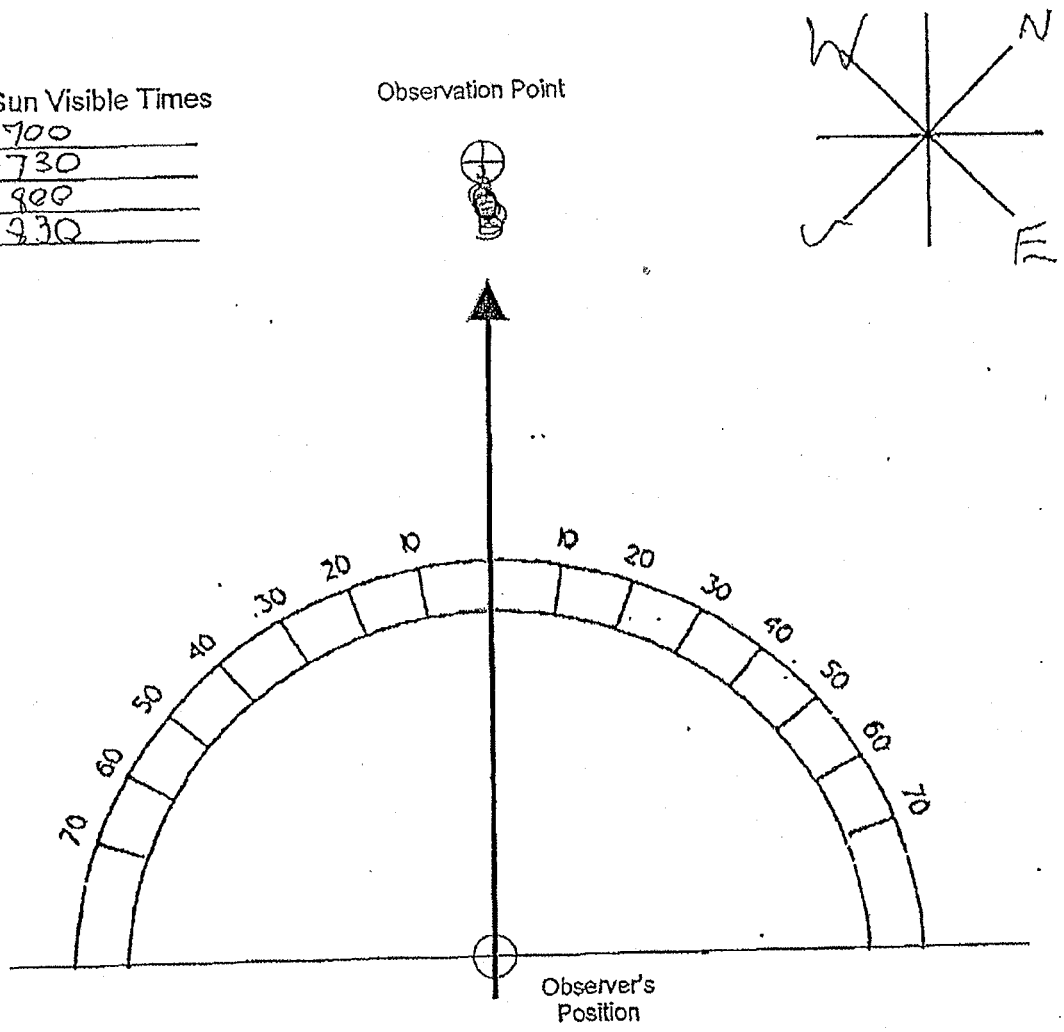

Signature: Clarence Patterson

20071107 Method 9 Source Layout Sketch.doc

15-1

OCS Environmental, Inc.

U.S. Steel Gary Works
Emissions Inspection Summary

Date: 11/19/07

Start Time: 06:45 AM / PM

End Time: 08:29 AM / PM

No. 2 Precarbon ESP

BOP	Roof Monitor		Gas Cleaners	
QBOP	Roof Monitor		Gas Cleaners	West
Blast Furnace	4	6	8	14
Blast Furnace Top	4	6	8	14

The following events or operations contributed to significant emissions:

Time	Heat/Cast Number	Operation	Comments

20071107 Inspection Summary.doc

OCS Environmental, Inc.
Method 9 VE Inspection Form

Page 1 of 3

			Start	End
Date:	11-19-07	Emissions color:	As Noted	Same
Source:	Q BOP GCS	Background:	Sky	
Observation Start Time:	06:45	Sky Conditions:	Overcast	
Observation End Time:	06:59	Wind Speed:	10 MPH	
Observer's Position:	SPQ	Wind Direction:	S	
Distance to source:	324 yds	Ambient Temp:	48°	
Direction to source:	NE 100°	Relative Humidity%:	93°	
Height of source:	190'	Wet Bulb Temp:	N/A	
Vertical angle to source:	90°			

Plume Type: Attached Detached None

Comments	0	15	30	45			0	15	30	45	Comments
W47394 Blow in P.					0	30					
					1	31					
					2	32					
					3	33					
					4	34					
					5	35					
					6	36					
TDW					7	37					
					8	38					
					9	39					
					10	40					
					11	41					
					12	42					
					13	43					
					14	44					
					15	45	0	0	0	0	W47394 Blow in P
					16	46	0	0	0	0	
					17	47	0	0	0	0	
					18	48	0	0	0	0	
					19	49	0	0	0	0	
					20	50	0	0	0	0	
					21	51	0	0	0	0	
					22	52	0	0	0	0	
					23	53	0	0	0	0	TDW
					24	54	0	0	0	0	
					25	55	0	0	0	0	
					26	56	0	0	0	0	
					27	57	0	0	0	0	
					28	58	0	0	0	0	
					29	59	0	0	0	0	

Additional info (include steam dissipation point)

W47394 BIP 6:45
Y49094 TDW

Observer's Signature

20071107 Method 9 Inspection Form.doc

OCS Environmental, Inc.
Method 9 VE Inspection Form

Date: 11-19-07
Source: 2 CROP CCS (West)
Observation Start Time: 07:00
Observation End Time: 07:59
Observer's Position: SP9
Distance to source: 324 ms.
Direction to source: NE 106°
Height of source: 190'
Vertical angle to source: 90°

	Start	End
Emissions color:	As Noted	Same
Background:	Sky	
Sky Conditions:	Overcast	
Wind Speed:	16 mph	
Wind Direction:	S	
Ambient Temp:	40°	
Relative Humidity%:	93%	
Wet Bulb Temp:	N/A	

Plume Type: Attached Detached None

Comments	0	15	30	45			0	15	30	45	Comments
	0	0	0	0	0	30	0	0	0	0	
TAP-W	0	0	0	0	1	31	0	0	0	0	
	0	0	0	0	2	32	0	0	0	0	
	0	0	0	0	3	33	0	0	0	0	
	0	0	0	0	4	34	0	0	0	0	TAP Y
	0	0	0	0	5	35	0	0	0	0	HMC W
SMC-Y 49094	0	0	0	0	6	36	0	0	0	0	HMC Complete.
	0	0	0	0	7	37	0	0	0	0	Blow
	0	0	0	0	8	38	0	0	0	0	
	0	0	0	0	9	39	0	0	0	0	
	0	0	0	0	10	40	0	0	0	0	
	0	0	0	0	11	41	0	0	0	0	
HMC Y	0	0	0	0	12	42	0	0	0	0	
HMC Complete	0	0	0	0	13	43	0	0	0	0	
Blow Y	0	0	0	0	14	44	0	0	0	0	
	0	0	0	0	15	45	0	0	0	0	
SMC-W	0	0	0	0	16	46	0	0	0	0	
	0	0	0	0	17	47	0	0	0	0	
	0	0	0	0	18	48	0	0	0	0	
	0	0	0	0	19	49	0	0	0	0	SMC Y 49095
	0	0	0	0	20	50	0	0	0	0	
	0	0	0	0	21	51	0	0	0	0	
	0	0	0	0	22	52	0	0	0	0	
	0	0	0	0	23	53	0	0	0	0	TD-W
	0	0	0	0	24	54	0	0	0	0	
	0	0	0	0	25	55	0	0	0	0	
	0	0	0	0	26	56	0	0	0	0	REBLOW-W
	0	0	0	0	27	57	0	0	0	0	
	0	0	0	0	28	58	0	0	0	0	TAP-W
TDY	0	0	0	0	29	59	0	0	0	0	

Additional info (include steam dissipation point)

Observer's Signature

OCS Environmental, Inc.
Method 9 VE Inspection Form

			Start	End
Date:	11-19-07	Emissions color:	As Noted	Same
Source:	2 QBOP GCS (West)	Background:	Sky	
Observation Start Time:	08:00	Sky Conditions:	Overcast	
Observation End Time:	08:29	Wind Speed:	10 MPH	
Observer's Position:	SP 9	Wind Direction:	SE.	
Distance to source:	324 yds	Ambient Temp:	40°	
Direction to source:	NE 100°	Relative Humidity%:	93%	
Height of source:	190'	Wet Bulb Temp:	N/A.	
Vertical angle to source:	9°			

Plume Type: Attached Detached None

Comments	0	15	30	45			0	15	30	45	Comments
	0	0	0	0	0	30					
	0	0	0	0	1	31					
	0	0	0	0	2	32					
	0	0	0	0	3	33					
	0	0	0	0	4	34					
	0	0	0	0	5	35					
	0	0	0	0	6	36					
HMC - Y	0	0	0	0	7	37					
	0	0	0	0	8	38					
HMC - Complete	0	0	0	0	9	39					
Blow - Y	0	0	0	0	10	40					
	0	0	0	0	11	41					
	0	0	0	0	12	42					
	0	0	0	0	13	43					
	0	0	0	0	14	44					
	0	0	0	0	15	45					
SMC - W	0	0	0	0	16	46					
	0	0	0	0	17	47					
	0	0	0	0	18	48					
	0	0	0	0	19	49					
	0	0	0	0	20	50					
	0	0	0	0	21	51					
	0	0	0	0	22	52					
TDY	0	0	0	0	23	53					
	0	0	0	0	24	54					
	0	0	0	0	25	55					
	0	0	0	0	26	56					
	0	0	0	0	27	57					
	0	0	0	0	28	58					
TAP - Y	0	0	0	0	29	59					

Additional info (include steam dissipation point)

Observer's Signature

20071107 Method 9 Inspection Form.doc

OCS Environmental, Inc.
Method 9 Source Layout Sketch

Date: 11/19/07

Observer Name: Chet Ducin

Begin Time: 06:45

Time End: 08:29

No Sun Visible Times
06:45
07:15
07:45
08:15

Observation Point

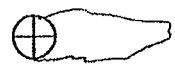

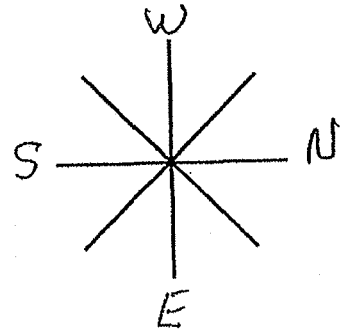

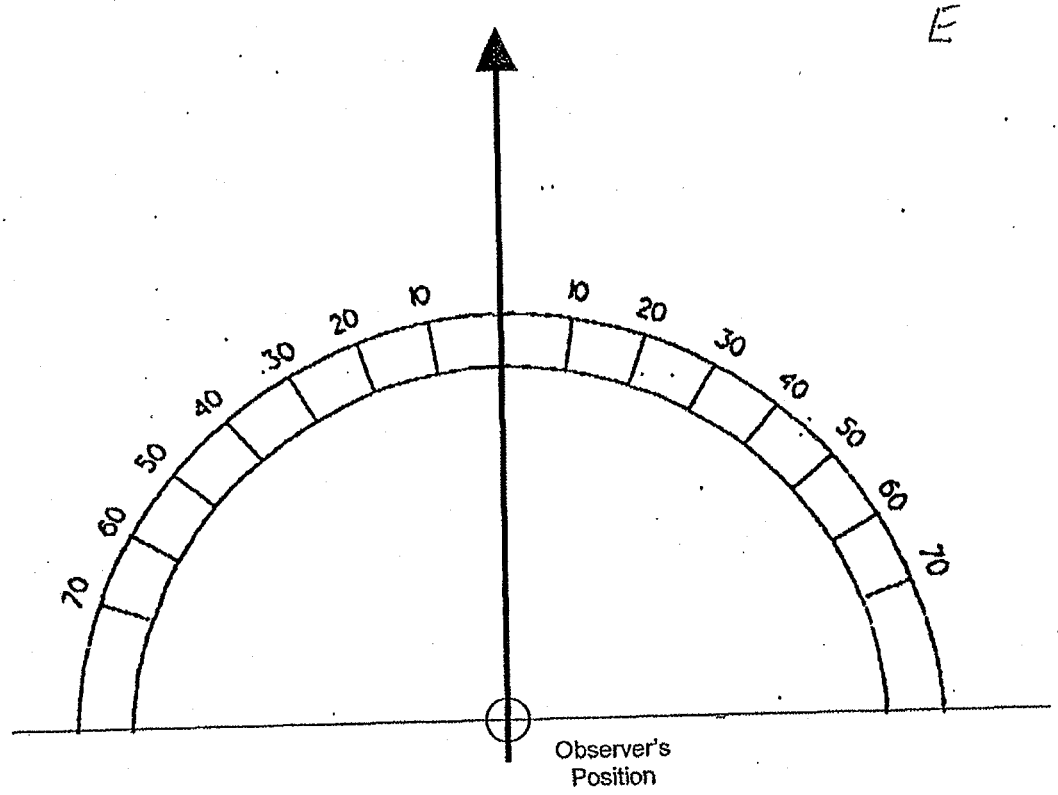

Signature: Chet Ducin

20071107 Method 9 Source Layout Sketch.doc

D44391
BIP.
M48132

OCS Environmental, Inc.

U.S. Steel Gary Works
Emissions Inspection Summary

Date: 11/19/07

Start Time: 08:30 AM / PM

End Time: 08:45 AM / PM

No. 2 Precarbon ESP

BOP	Roof Monitor		Gas Cleaners	
QBOP	Roof Monitor		Gas Cleaners EAST	
Blast Furnace	4	6	8	14
Blast Furnace Top	4	6	8	14

The following events or operations contributed to significant emissions:

Time	Heat/Cast Number	Operation	Comments

20071107 Inspection Summary.doc

OCS Environmental, Inc.
Method 9 VE Inspection Form

Page 1 of 1

			Start	End
Date:	11-19-07	Emissions color:	AS NOTED	SAME
Source:	#2 QBOP GCS EAST	Background:	SKY	
Observation Start Time:	08:30	Sky Conditions:	OVERCAST	
Observation End Time:	08:45	Wind Speed:	10 MPH	
Observed Point:	SP9	Wind Direction:	SO.	
Distance to source:	324 YDS	Ambient Temp:	40°	
Direction to source:	NE	Relative Humidity%:	93%	
	100°	Wet Bulb Temp:	N/A.	
Height of source:	190'			
Vertical angle to source:	9°			

Plume Type: Attached Detached None

Comments	0	15	30	45			0	15	30	45	Comments
					0	30	0	0	0	0	
					1	31	0	0	0	0	
					2	32	0	0	0	0	HMC-W
					3	33	0	0	0	0	HMC-COMPLETE
					4	34	0	0	0	0	BLOW-W 8:38
					5	35	0	0	0	0	
					6	36	0	0	0	0	
					7	37	0	0	0	0	
					8	38	0	0	0	0	
					9	39	0	0	0	0	
					10	40	0	0	0	0	
					11	41	0	0	0	0	
					12	42	0	0	0	0	
					13	43	0	0	0	0	
					14	44	0	0	0	0	
					15	45	0	0	0	0	
					16	46					END OF OBSERVATION
					17	47					
					18	48					
					19	49					
					20	50					
					21	51					
					22	52					
					23	53					
					24	54					
					25	55					
					26	56					
					27	57					
					28	58					
					29	59					

Additional info (include steam dissipation point)

Observer's Signature: Chet Dulin

20071107 Method 9 Inspection Form.doc

OCS Environmental, Inc.
Method 9 Source Layout Sketch

Date: 11/19/07

Observer Name: Chet Ducin

Begin Time: 08:30 Time End: 08:45

No Sun Visible Times
08:30

Observation Point

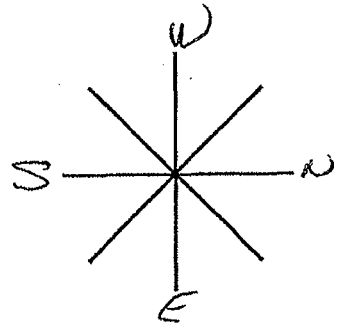

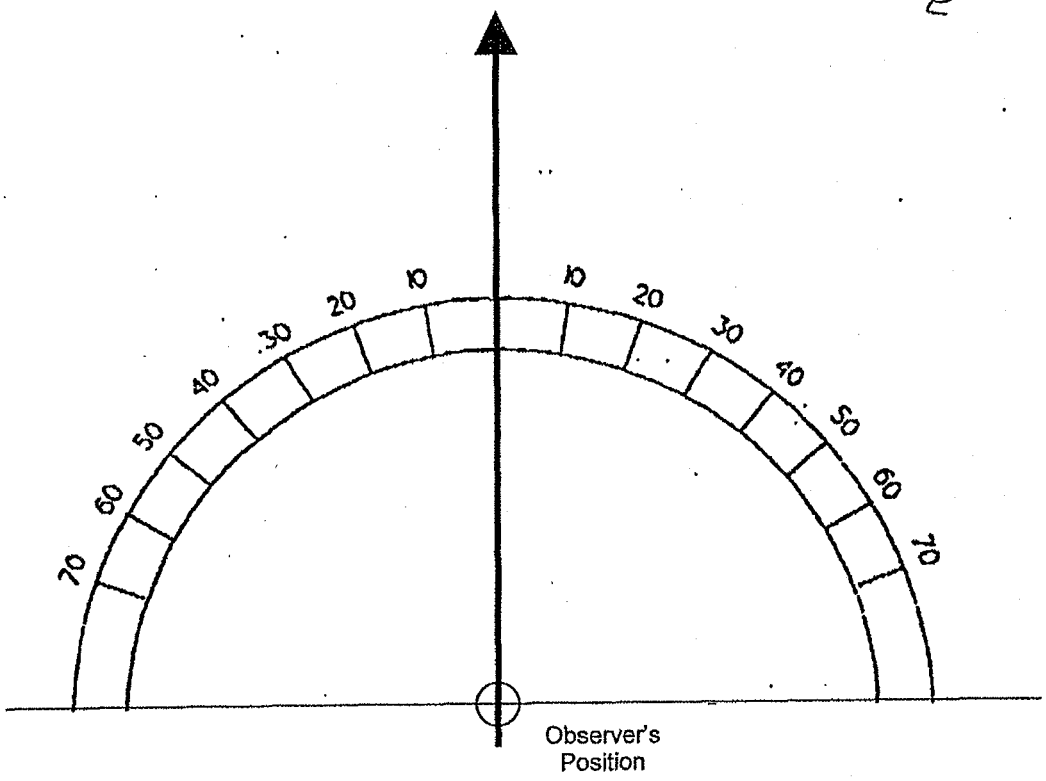

Signature: Chet Ducin

20071107 Method 9 Source Layout Sketch.doc

15-2

OCS Environmental, Inc.

U.S. Steel Gary Works
Emissions Inspection Summary

Date: 11/15/07

Start Time: 0930 AM / PM

End Time: 1129 AM / PM

No. 2 Precarbon ESP

BOP	Roof Monitor		~~Gas Cleaners~~	
QBOP	Roof Monitor		Gas Cleaners	
Blast Furnace	4	6	8	14
Blast Furnace Top	4	6	8	14

The following events or operations contributed to significant emissions:

Time	Heat/Cast Number	Operation	Comments
	NO EMISSIONS OBSERVED		

20071107 Inspection Summary.doc

OCS Environmental, Inc.
Method 9 VE Inspection Form

Date: 11-15-07
Source: #2 Q-BOPG, C.S
Observation Start Time: 0930
Observation End Time: 0959
Observer's Position: SP-8
Distance to source: 350 yds
Direction to source: NE 124° MAG. NORTH
Height of source: 190 ft
Vertical angle to source: 19°

	Start	End
Emissions color:		
Background:	SKY-GRAY	
Sky Conditions:	CLOUDY	
Wind Speed:	15 mph	
Wind Direction:	NW	
Ambient Temp:	40°	
Relative Humidity%:	60%	
Wet Bulb Temp:		

Plume Type: Attached ✓ Detached None

Comments	0	15	30	45			0	15	30	45	Comments
					0	30	0	0	0	0	EAST STACK
					1	31	0	0	0	0	
					2	32	0	0	0	0	
					3	33	0	0	0	0	
					4	34	0	0	0	0	
					5	35	0	0	0	0	
					6	36	0	0	0	0	
					7	37	0	0	0	0	
					8	38	0	0	0	0	
					9	39	0	0	0	0	
					10	40	0	0	0	0	
					11	41	0	0	0	0	
					12	42	0	0	0	0	
					13	43	0	0	0	0	
					14	44	0	0	0	0	
					15	45	0	0	0	0	
					16	46	0	0	0	0	
					17	47	0	0	0	0	
					18	48	0	0	0	0	
					19	49	0	0	0	0	
					20	50	0	0	0	0	
					21	51	0	0	0	0	
					22	52	0	0	0	0	
					23	53	0	0	0	0	
					24	54	0	0	0	0	
					25	55	0	0	0	0	
					26	56	0	0	0	0	
					27	57	0	0	0	0	
					28	58	0	0	0	0	
					29	59	0	0	0	0	

Additional info (include steam dissipation point)

Observer's Signature: Darrel Robinson

OCS Environmental, Inc.
Method 9 VE Inspection Form

Date: 11-15-07
Source: #2 QBOP GCS
Observation Start Time: 1000
Observation End Time: 1059
Observer's Position: SP-8
Distance to source: 350 yds
Direction to source: NE 124° MAG. NORTH
Height of source: 190 ft.
Vertical angle to source: 19°

	Start	End
Emissions color:		
Background:	SKY-GRAY	
Sky Conditions:	Cloudy	SA
Wind Speed:	15 MPH	
Wind Direction:	N	
Ambient Temp:	40°	
Relative Humidity%:	60%	
Wet Bulb Temp:		

Plume Type: Attached Detached None

Comments	0	15	30	45			0	15	30	45	Comments
EAST STACK	0	0	0	0	0	30	0	0	0	0	WEST STACK
	0	0	0	0	1	31	0	0	0	0	
	0	0	0	0	2	32	0	0	0	0	
	0	0	0	0	3	33	0	0	0	0	
	0	0	0	0	4	34	0	0	0	0	
	0	0	0	0	5	35	0	0	0	0	
	0	0	0	0	6	36	0	0	0	0	
	0	0	0	0	7	37	0	0	0	0	
	0	0	0	0	8	38	0	0	0	0	
	0	0	0	0	9	39	0	0	0	0	
	0	0	0	0	10	40	0	0	0	0	
	0	0	0	0	11	41	0	0	0	0	
	0	0	0	0	12	42	0	0	0	0	
	0	0	0	0	13	43	0	0	0	0	
	0	0	0	0	14	44	0	0	0	0	
	0	0	0	0	15	45	0	0	0	0	
	0	0	0	0	16	46	0	0	0	0	
	0	0	0	0	17	47	0	0	0	0	
	0	0	0	0	18	48	0	0	0	0	
	0	0	0	0	19	49	0	0	0	0	
	0	0	0	0	20	50	0	0	0	0	
	0	0	0	0	21	51	0	0	0	0	
	0	0	0	0	22	52	0	0	0	0	
	0	0	0	0	23	53	0	0	0	0	
	0	0	0	0	24	54	0	0	0	0	
	0	0	0	0	25	55	0	0	0	0	
	0	0	0	0	26	56	0	0	0	0	
	0	0	0	0	27	57	0	0	0	0	
	0	0	0	0	28	58	0	0	0	0	
	0	0	0	0	29	59	0	0	0	0	

Additional info (include steam dissipation point)

Observer's Signature: Harold Robinson

20071107 Method 9 Inspection Form.doc

OCS Environmental, Inc.
Method 9 VE Inspection Form

Page 3 of 3

Date: 11-15-07
Source: #2 BOPGCS.
Observation Start Time: 1100
Observation End Time: 1129
Observer's Position: SP-8
Distance to source: 350 YDS
Direction to source: NE 124° MDG. NORTH
Height of source: 190 FT
Vertical angle to source: 19°

	Start	End
Emissions color:		
Background:	SKY GRAY	
Sky Conditions:	CLOUDY	S
Wind Speed:	15 MPH	A
Wind Direction:	N	M
Ambient Temp:	40°	E
Relative Humidity%:	60%	
Wet Bulb Temp:		

Plume Type: Attached Detached None

Comments	0	15	30	45			0	15	30	45	Comments
WEST STACK	0	0	0	0	0	30					
	0	0	0	0	1	31					
	0	0	0	0	2	32					
	0	0	0	0	3	33					
	0	0	0	0	4	34					
	0	0	0	0	5	35					
	0	0	0	0	6	36					
	0	0	0	0	7	37					
	0	0	0	0	8	38					
	0	0	0	0	9	39					
	0	0	0	0	10	40					
	0	0	0	0	11	41					
	0	0	0	0	12	42					
	0	0	0	0	13	43					
	0	0	0	0	14	44					
	0	0	0	0	15	45					
	0	0	0	0	16	46					
	0	0	0	0	17	47					
	0	0	0	0	18	48					
	0	0	0	0	19	49					
	0	0	0	0	20	50					
	0	0	0	0	21	51					
	0	0	0	0	22	52					
	0	0	0	0	23	53					
	0	0	0	0	24	54					
	0	0	0	0	25	55					
	0	0	0	0	26	56					
	0	0	0	0	27	57					
	0	0	0	0	28	58					
	0	0	0	0	29	59					

Additional info (include steam dissipation point)

Observer's Signature: Harold J. Robinson

20071107 Method 9 Inspection Form.doc

OCS Environmental, Inc.
Method 9 Source Layout Sketch

Date: 11/15/07

Observer Name: HAROLD ROBINSON

Begin Time: 0930 Time End: 1129

No Sun Visible Times
0930
1000
1030
1100

Observation Point

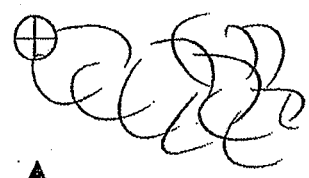

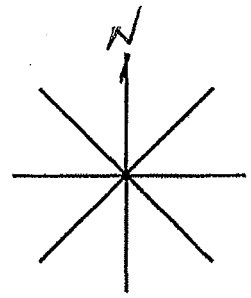

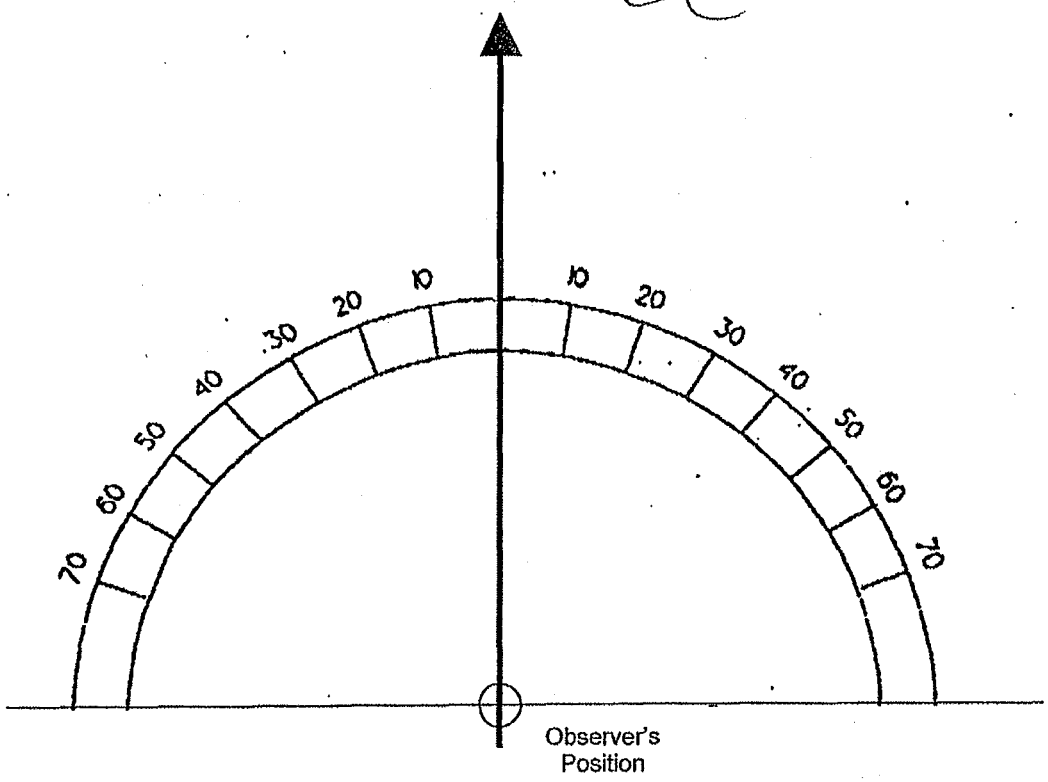

Signature: Harold Robinson

20071107 Method 9 Source Layout Sketch.doc

15-3

OCS Environmental, Inc.

U.S. Steel Gary Works
Emissions Inspection Summary

Date: 11/26/07

Start Time: 0700 AM / PM

End Time: 0946 AM / PM

No. 2 Precarbon ESP

BOP	Roof Monitor		Gas Cleaners	
QBOP	Roof Monitor		Gas Cleaners	
Blast Furnace	4	6	8	14
Blast Furnace Top	4	6	8	14

The following events or operations contributed to significant emissions:

Time	Heat/Cast Number	Operation	Comments

20071107 Inspection Summary.doc

T-46453
L

OCS Environmental, Inc.
Method 9 VE Inspection Form

Page 1 of 3

			Start	End
Date:	11-26-07			
Source:	Q Pop	Emissions color:	As Noted	Same
Observation Start Time:	0700	Background:	Sky	
Observation End Time:	0759	Sky Conditions:	Overcast	
Observer's Position:	SP6	Wind Speed:	5	
Distance to source:	225 yds	Wind Direction:	SE	
Direction to source:	NW 10°	Ambient Temp:	31°	
		Relative Humidity%:	90%	
Height of source:	186'	Wet Bulb Temp:	N/A	
Vertical angle to source:	13°			

Plume Type: Attached Detached None

Comments	0	15	30	45			0	15	30	45	Comments
Y 49205	0	0	0	0	0	30	0	0	0	0	
Blow in Progress	0	0	0	0	1	31	0	0	0	0	
	0	0	0	0	2	32	0	0	0	0	
	0	0	0	0	3	33	0	0	0	0	
	0	0	0	0	4	34	0	0	0	0	
	0	0	0	0	5	35	0	0	0	0	
	0	0	0	0	6	36	0	0	0	0	
	0	0	0	0	7	37	0	0	0	0	
	0	0	0	0	8	38	0	0	0	0	
	0	0	0	0	9	39	0	0	0	0	
	0	0	0	0	10	40	0	0	0	0	
	0	0	0	0	11	41	0	0	0	0	
	0	0	0	0	12	42	0	0	0	0	
	0	0	0	0	13	43	0	0	0	0	
	0	0	0	0	14	44	0	0	0	0	
	0	0	0	0	15	45	0	0	0	0	
Turn Down Y	0	0	0	0	16	46	0	0	0	0	
	0	0	0	0	17	47	0	0	0	0	
	0	0	0	0	18	48	0	0	0	0	Change Scrap - T
Reblow - Y	0	0	0	0	19	49	0	0	0	0	# 46453
	0	0	0	0	20	50	0	0	0	0	
Tap - Y	0	0	0	0	21	51	0	0	0	0	
	0	0	0	0	22	52	0	0	0	0	
	0	0	0	0	23	53	0	0	0	0	
	0	0	0	0	24	54	0	0	0	0	
	0	0	0	0	25	55	0	0	0	0	
	0	0	0	0	26	56	0	0	0	0	
	0	0	0	0	27	57	0	0	0	0	
	0	0	0	0	28	58	0	0	0	0	
	0	0	0	0	29	59	0	0	0	0	

Additional info (include steam dissipation point)

Observer's Signature

20071107 Method 9 Inspection Form.doc

OCS Environmental, Inc.
Method 9 VE Inspection Form

Date: 11-26-07
Source: Q Bop Roof
Observation Start Time: 0800
Observation End Time: 0859
Observer's Position: SP6
Distance to source: 225 YDS
Direction to source: NW 10°

Height of source: 186'
Vertical angle to source: 13°

	Start	End
Emissions color:	As Noted	SAME
Background:	SKY	
Sky Conditions:	OVERCAST	
Wind Speed:	5	
Wind Direction:	SE	
Ambient Temp:	31°	
Relative Humidity%:	90%	
Wet Bulb Temp:	N/A	

Plume Type: Attached Detached None

Comments	0	15	30	45			0	15	30	45	Comments
	0	0	0	0	0	30	0	0	0	0	
	0	0	0	0	1	31	0	0	0	0	
	0	0	0	0	2	32	0	0	0	0	
	0	0	0	0	3	33	0	0	0	0	RE BLOW - T
	0	0	0	0	4	34	0	0	0	0	
	0	0	0	0	5	35	0	0	0	0	
	0	0	0	0	6	36	0	0	0	0	TAP ON T
	0	0	0	0	7	37	0	0	0	0	
	0	0	0	0	8	38	0	0	0	0	
Hot metal chg - T	0	0	0	0	9	39	0	0	0	0	
# 46453	0	0	0	0	10	40	0	0	0	0	
	0	0	0	0	11	41	0	0	0	0	
Hmlch - complete - Blow	0	0	0	0	12	42	0	0	0	0	
	0	0	0	0	13	43	0	0	0	0	
	0	0	0	0	14	44	0	0	0	0	
	0	0	0	0	15	45	0	0	0	0	
	0	0	0	0	16	46	0	0	0	0	
	0	0	0	0	17	47	0	0	0	0	
	0	0	0	0	18	48	0	0	0	0	
	0	0	0	0	19	49	0	0	0	0	
	0	0	0	0	20	50	0	0	0	0	
	0	0	0	0	21	51	0	0	0	0	
	0	0	0	0	22	52	0	0	0	0	
	0	0	0	0	23	53	0	0	0	0	SCRAP CH-T 46454
	0	0	0	0	24	54	0	0	0	0	
	0	0	0	0	25	55	0	0	0	0	
	0	0	0	0	26	56	0	0	0	0	
	0	0	0	0	27	57	0	0	0	0	
TURN DWN T	0	0	0	0	28	58	0	0	0	0	
	0	0	0	0	29	59	0	0	0	0	

Additional info (include steam dissipation point)

Observer's Signature

20071107 Method 9 Inspection Form.doc

OCS Environmental, Inc.
Method 9 VE Inspection Form

Date:	11-26-07
Source:	QBop Roof
Observation Start Time:	0900
Observation End Time:	0946
Observer's Position:	SP6
Distance to source:	225 yds
Direction to source:	NW 10°
Height of source:	186'
Vertical angle to source:	18°

	Start	End
Emissions color:	As noted	same
Background:	SKY	
Sky Conditions:	Overcast	
Wind Speed:	5	
Wind Direction:	SE	
Ambient Temp:	31°	
Relative Humidity%:	90%	
Wet Bulb Temp:	N/A	

Plume Type: Attached Detached None

Comments	0	15	30	45			0	15	30	45	Comments
	0	0	0	0	0	30	0	0	0	0	
	0	0	0	0	1	31	0	0	0	0	
	0	0	0	0	2	32	0	0	0	0	
	0	0	0	0	3	33	0	0	0	0	
	0	0	0	0	4	34	0	0	0	0	
	0	0	0	0	5	35	0	0	0	0	
	0	0	0	0	6	36	0	0	0	0	Turn Down - T
	0	0	0	0	7	37	0	0	0	0	
	0	0	0	0	8	38	0	0	0	0	
	0	0	0	0	9	39	0	0	0	0	
	0	0	0	0	10	40	0	0	0	0	
	0	0	0	0	11	41	0	0	0	0	Reblow T
	0	0	0	0	12	42	0	0	0	0	
	0	0	0	0	13	43	0	0	0	0	
	0	0	0	0	14	44	0	0	0	0	Tap - T
	0	0	0	0	15	45	0	0	0	0	
	0	0	0	0	16	46	0	0	0	0	
	0	0	0	0	17	47					
	0	0	0	0	18	48					
Html change - T	0	0	0	0	19	49					
# 46454	0	0	0	0	20	50					
Html comp. Blow	0	0	0	0	21	51					
	0	0	0	0	22	52					
	0	0	0	0	23	53					
	0	0	0	0	24	54					
	0	0	0	0	25	55					
	0	0	0	0	26	56					
	0	0	0	0	27	57					
	0	0	0	0	28	58					
	0	0	0	0	29	59					

Additional Info (include steam dissipation point)

Observer's Signature

OCS Environmental, Inc.
Method 9 Source Layout Sketch

Date: 11 / 26 / 07

Observer Name: R. Mackey

Begin Time: 0700

Time End: 0946

No Sun Visible Times

0700
0730
0800
0830
0900

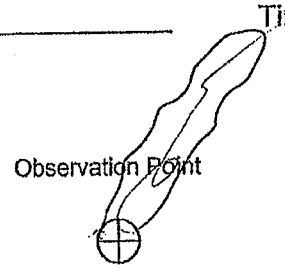

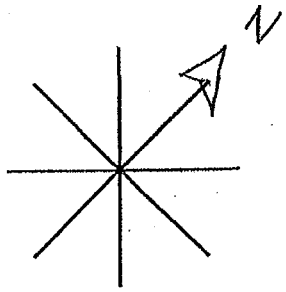

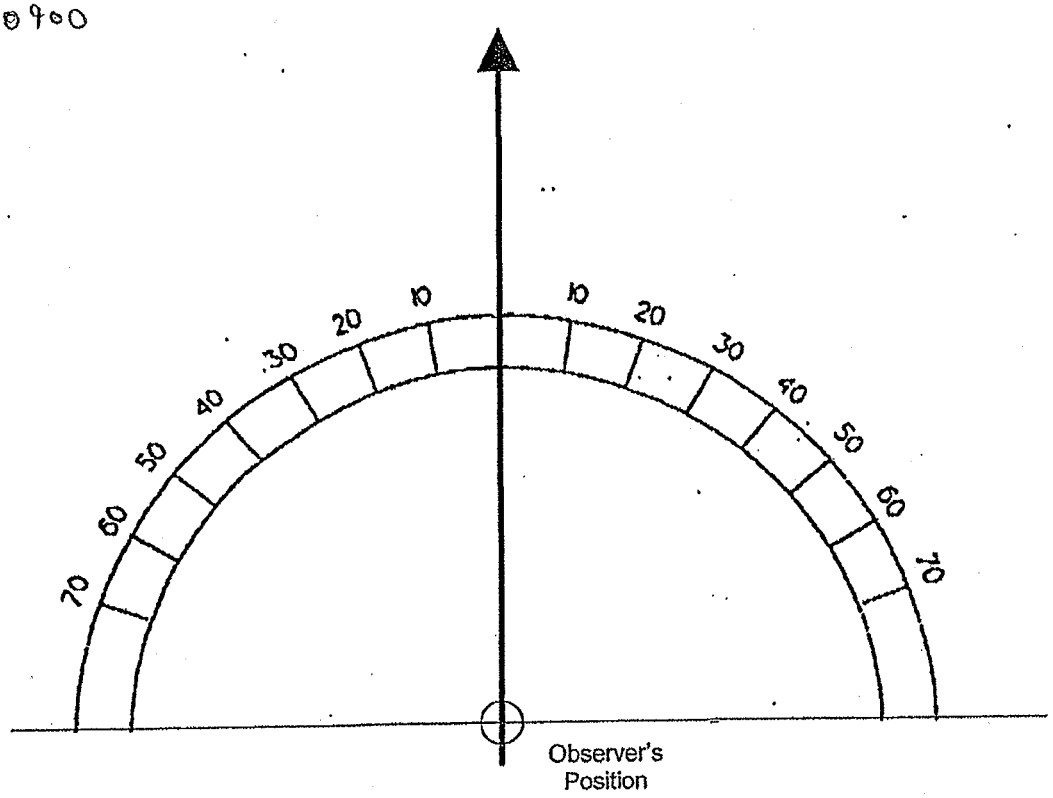

Signature: Rick J Mackey

20071107 Method 9 Source Layout Sketch.doc

OCS Environmental, Inc.

U.S. Steel Gary Works
Emissions Inspection Summary

Date: 11 / 20 / 07

Start Time: 0950 AM / PM

End Time: 1150 AM / PM

No. 2 Precarbon ESP

BOP	Roof Monitor		Gas Cleaners	
QBOP	Roof Monitor		Gas Cleaners	
Blast Furnace	4	6	8	14
Blast Furnace Top	4	6	8	14

The following events or operations contributed to significant emissions:

Time	Heat/Cast Number	Operation	Comments

20071107 Inspection Summary.doc

OCS Environmental, Inc.
Method 9 VE Inspection Form

Page 1 of 3

Date:	11-20-07
Source:	Q Bay Roof
Observation Start Time:	0950
Observation End Time:	0959
Observer's Position:	SP6
Distance to source:	225 yds
Direction to source:	NW 10°
Height of source:	186'
Vertical angle to source:	13°

	Start	End
Emissions color:	As Noted	Same
Background:	Sky	
Sky Conditions:	Overcast	
Wind Speed:	3	
Wind Direction:	NE	
Ambient Temp:	47°	
Relative Humidity%:	96%	
Wet Bulb Temp:	N/A	

Plume Type: Attached Detached None

Comments	0	15	30	45			0	15	30	45	Comments
					0	30					
					1	31					
					2	32					
					3	33					
					4	34					
					5	35					
					6	36					
					7	37					
					8	38					
					9	39					
					10	40					
					11	41					
					12	42					
					13	43					
					14	44					
					15	45					
					16	46					
					17	47					
					18	48					
					19	49					
					20	50	0	0	0	0	Scrap-W 47418
					21	51	0	0	0	0	
					22	52	0	0	0	0	
					23	53	0	0	0	0	
					24	54	0	0	0	0	
					25	55	0	0	0	0	Html-W
					26	56	0	0	0	0	
					27	57	0	0	0	5	Html-complete
					28	58	5	5	0	0	Brown
					29	59	0	0	0	0	

Additional info (include steam dissipation point)

Observer's Signature

[signature]

20071107 Method 9 Inspection Form.doc

OCS Environmental, Inc.
Method 9 VE Inspection Form

Date:	11-20-07
Source:	Q Bop Roof
Observation Start Time:	1000
Observation End Time:	1059
Observer's Position:	SPG
Distance to source:	225 yds
Direction to source:	NW 10'
Height of source:	150'
Vertical angle to source:	13°

	Start	End
Emissions color:	As Notes	Same
Background:	Sky	
Sky Conditions:	Overcast	
Wind Speed:	3	
Wind Direction:	NE	
Ambient Temp:	47°	
Relative Humidity%:	96%	
Wet Bulb Temp:	N/A	

Plume Type: Attached Detached None

Comments	0	15	30	45			0	15	30	45	Comments
	0	0	0	0	0	30	0	0	0	0	
	0	0	0	0	1	31	0	0	0	0	
	0	0	0	0	2	32	0	0	0	0	
	0	0	0	0	3	33	0	0	0	0	
	0	0	0	0	4	34	0	0	0	0	
	0	0	0	0	5	35	0	0	0	0	
	0	0	0	0	6	36	0	0	0	0	
	0	0	0	0	7	37	0	0	0	0	
	0	0	0	0	8	38	0	0	0	0	HtmL - T 46396
	0	0	0	0	9	39	0	0	0	0	
	0	0	0	0	10	40	0	0	0	0	Html complete
	0	0	0	0	11	41	5	10	10	5	Blow - T
Turn Down - W	0	0	0	0	12	42	5	0	0	0	Brown
	0	0	0	0	13	43	0	0	0	0	
	0	0	0	0	14	44	0	0	0	0	
	0	0	0	0	15	45	0	0	0	0	
Scrap T 46396	0	0	0	0	16	46	0	0	0	0	
Charge	0	0	0	0	17	47	0	0	0	0	
Tap - W	0	0	0	0	18	48	0	0	0	0	
	0	0	0	0	19	49	0	0	0	0	
	0	0	0	0	20	50	0	0	0	0	
	0	0	0	0	21	51	0	0	0	0	
	0	0	0	0	22	52	0	0	0	0	
	0	0	0	0	23	53	0	0	0	0	
	0	0	0	0	24	54	0	0	0	0	
	0	0	0	0	25	55	0	0	0	0	
	0	0	0	0	26	56	0	0	0	0	
	0	0	0	0	27	57	0	0	0	0	
	0	0	0	0	28	58	0	0	0	0	Turn Down - T
	0	0	0	0	29	59	0	0	0	0	

Additional info (include steam dissipation point)

Observer's Signature: Rick J Mack

OCS Environmental, Inc.
Method 9 VE Inspection Form

Date: 11-20-07
Source: Q Bop Roof
Observation Start Time: 1100
Observation End Time: 1150
Observer's Position: SPG
Distance to source: 225 yds
Direction to source: NW 10°

Height of source: 186'
Vertical angle to source: 13°

	Start	End
Emissions color:	As noted	Same
Background:	Sky	
Sky Conditions:	Overcast	
Wind Speed:	3	
Wind Direction:	NE	
Ambient Temp:	47°	
Relative Humidity%:	96%	
Wet Bulb Temp:	N/A	

Plume Type: Attached Detached None

Comments	0	15	30	45			0	15	30	45	Comments
	0	0	0	0	0	30	0	0	0	0	
	0	0	0	0	1	31	0	0	0	0	TURN DWN - W
ReBlow - T	0	0	0	0	2	32	0	0	0	0	
	0	0	0	0	3	33	0	0	0	0	
	0	0	0	0	4	34	0	0	0	0	REBLOW - W
TAP - T	0	0	0	0	5	35	0	0	0	0	
	0	0	0	0	6	36	0	0	0	0	
	0	0	0	0	7	37	0	0	0	0	TAP - W
	0	0	0	0	8	38	0	0	0	0	
SCRAP - W 47419	0	0	0	0	9	39	0	0	0	0	
	0	0	0	0	10	40	0	0	0	0	
	0	0	0	0	11	41	0	0	0	0	
	0	0	0	0	12	42	0	0	0	0	
	0	0	0	0	13	43	0	0	0	0	
H-tml - W	0	0	0	0	14	44	0	0	0	0	
H-tml - Complete	0	0	0	0	15	45					
Blow - W	0	0	0	0	16	46					
	0	0	0	0	17	47					
	0	0	0	0	18	48					
	0	0	0	0	19	49					
	0	0	0	0	20	50					
	0	0	0	0	21	51					
	0	0	0	0	22	52					
	0	0	0	0	23	53					
	0	0	0	0	24	54					
	0	0	0	0	25	55					
	0	0	0	0	26	56					
	0	0	0	0	27	57					
SCRAP - T 46397	0	0	0	0	28	58					
	0	0	0	0	29	59					

Additional Info (include steam dissipation point)

Observer's Signature

20071107 Method 9 Inspection Form.doc

OCS Environmental, Inc.
Method 9 Source Layout Sketch

Date: 11 / 20 / 07

Observer Name: R. Mackey

Begin Time: 0950

Time End: 1150

No Sun Visible Times
0950
1020
1050
1120

Observation Point

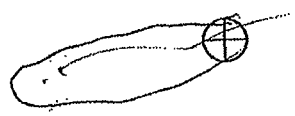

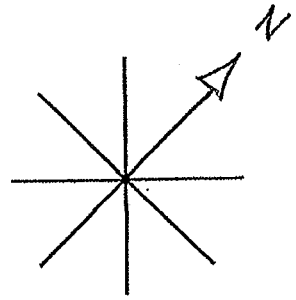

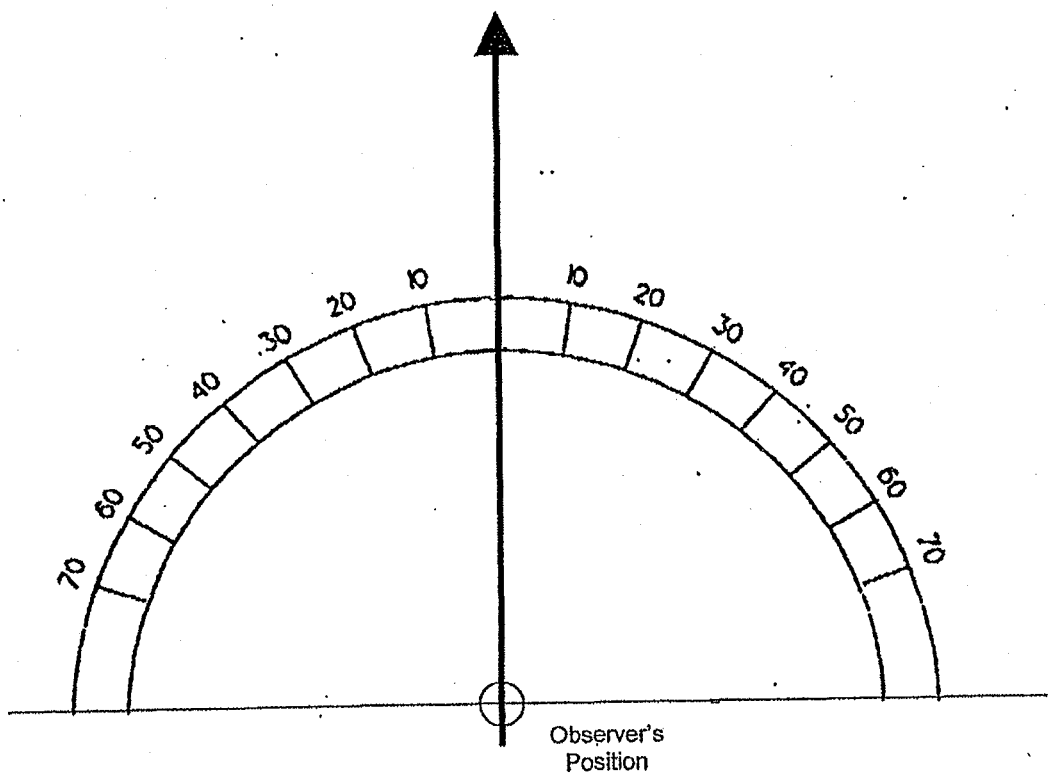

Signature: Rd Mackey

20071107 Method 9 Source Layout Sketch.doc

18-5

OCS Environmental, Inc.

U.S. Steel Gary Works
Emissions Inspection Summary

Date: 12/07/2007

Start Time: 07 10 AM / PM

End Time: 0910 AM / PM

No. 2 Precarbon ESP

BOP	Roof Monitor		Gas Cleaners	
QBOP	Roof Monitor		Gas Cleaners	
Blast Furnace	4	6	8	14
Blast Furnace Top	4	6	8	14

The following events or operations contributed to significant emissions:

Time	Heat/Cast Number	Operation	Comments

Jon Simpson

20071107 Inspection Summary.doc

OCS Environmental, Inc.
Method 9 VE Inspection Form

Page 1 of 3

Date:	12/07/07
Source:	29 Bop Roof
Observation Start Time:	0710
Observation End Time:	075945
Observer's Position:	SPB
Distance to source:	225 yds
Direction to source:	NW 10°
Height of source:	186'
Vertical angle to source:	13°

	Start	End
Emissions color:	AS NOTED	SAME
Background:	Sky	
Sky Conditions:	OVERCAST	
Wind Speed:	5	
Wind Direction:	SW	
Ambient Temp:	26°	
Relative Humidity%:	88%	
Wet Bulb Temp:	—	—

Plume Type: Attached Detached None

Comments	0	15	30	45			0	15	30	45	Comments
					0	30	0	0	0	0	SC-Y 49296
					1	31	0	0	0	0	
					2	32	0	0	0	0	
					3	33	0	0	0	0	
					4	34	0	0	0	0	Hmc-Y / RB-W
					5	35	0	0	0	0	
					6	36	0	0	0	0	Tap-W, Blow-Y
					7	37	0	0	0	0	
					8	38	0	0	0	0	
					9	39	0	0	0	0	
Hmc-W Y7628	0	0	0	0	10	40	0	0	0	0	
	0	0	0	0	11	41	0	0	0	0	
Blow-W	0	0	0	0	12	42	0	0	0	0	
	0	0	0	0	13	43	0	0	0	0	
	0	0	0	0	14	44	0	0	0	0	
	0	0	0	0	15	45	0	0	0	0	
	0	0	0	0	16	46	0	0	0	0	
	0	0	0	0	17	47	0	0	0	0	
	0	0	0	0	18	48	0	0	0	0	
	0	0	0	0	19	49	0	0	0	0	
	0	0	0	0	20	50	0	0	0	0	
	0	0	0	0	21	51	0	0	0	0	
	0	0	0	0	22	52	0	0	0	0	TD-Y
	0	0	0	0	23	53	0	0	0	0	
	0	0	0	0	24	54	0	0	0	0	
	0	0	0	0	25	55	0	0	0	0	
	0	0	0	0	26	56	0	0	0	0	
TD-W	0	0	0	0	27	57	0	0	0	0	RB-Y
	0	0	0	0	28	58	0	0	0	0	
	0	0	0	0	29	59	0	0	0	0	

Additional info (include steam dissipation point)

Observer's Signature: Jon Simpson

20071107 Method 9 Inspection Form.doc

OCS Environmental, Inc.
Method 9 VE Inspection Form

Page 2 of 3

Date:	12/07/07
Source:	2 & Bag House F
Observation Start Time:	0900
Observation End Time:	0859
Observer's Position:	SBC
Distance to source:	225 yards
Direction to source:	NW 10°
Height of source:	18.6'
Vertical angle to source:	13°

	Start	End
Emissions color:	As Noted	SAME
Background:	sky	
Sky Conditions:	Overcast	
Wind Speed:	5	
Wind Direction:	SW	
Ambient Temp:	60°	
Relative Humidity%:	88%	
Wet Bulb Temp:	—	—

Plume Type: Attached Detached None

Comments	0	15	30	45			0	15	30	45	Comments
	0	0	0	0	0	30	0	0	0	0	
SC-W 47629	0	0	0	0	1	31	0	0	0	0	
Tap-Y	0	0	0	0	2	32	0	0	0	0	
	0	0	0	0	3	33	0	0	0	0	
	0	0	0	0	4	34	0	0	0	0	Tap-W
	0	0	0	0	5	35	0	0	0	0	
	0	0	0	0	6	36	0	0	0	0	
	0	0	0	0	7	37	0	0	0	0	
	0	0	0	0	8	38	0	0	0	0	
HMC-W	0	0	0	0	9	39	0	0	0	0	
Blow. W	0	0	0	0	10	40	0	0	0	0	
	0	0	0	0	11	41	0	0	0	0	
	0	0	0	0	12	42	0	0	0	0	
	0	0	0	0	13	43	0	0	0	0	
	0	0	0	0	14	44	0	0	0	0	
	0	0	0	0	15	45	0	0	0	0	
	0	0	0	0	16	46	0	0	0	0	
	0	0	0	0	17	47	0	0	0	0	SC-Y49297
	0	0	0	0	18	48	0	0	0	0	
	0	0	0	0	19	49	0	0	0	0	
	0	0	0	0	20	50	0	0	0	0	
	0	0	0	0	21	51	0	0	0	0	
	0	0	0	0	22	52	0	0	0	0	
	0	0	0	0	23	53	0	0	0	0	
	0	0	0	0	24	54	0	0	0	0	SC-W 47630
	0	0	0	0	25	55	0	0	0	0	
TD-W	0	0	0	0	26	56	0	0	0	0	
	0	0	0	0	27	57	0	0	0	0	
	0	0	0	0	28	58	0	0	0	0	
	0	0	0	0	29	59	0	0	0	0	

Additional info (include steam dissipation point)

Observer's Signature: Jon Dempson

20071107 Method 9 Inspection Form.doc

OCS Environmental, Inc.
Method 9 VE Inspection Form

Date:	12/07/07
Source:	29 Bop Roof
Observation Start Time:	0900
Observation End Time:	090945
Observer's Position:	SPG
Distance to source:	225 yards
Direction to source:	NW 10°
Height of source:	186'
Vertical angle to source:	13°

	Start	End
Emissions color:	As Noted	SAME
Background:	Sky	↓
Sky Conditions:	OVERCAST	↓
Wind Speed:	5	↓
Wind Direction:	SW	↓
Ambient Temp:	26°	↓
Relative Humidity%:	88%	↓
Wet Bulb Temp:	—	—

Plume Type: Attached Detached None

Comments	0	15	30	45			0	15	30	45	Comments
	0	0	0	0	0	30					
Hmcy 99298	0	0	0	0	1	31					
	0	0	0	0	2	32					
Blow-y	0	0	0	0	3	33					
	0	0	0	0	4	34					
	0	0	0	0	5	35					
	0	0	0	0	6	36					
	0	0	0	0	7	37					
	0	0	0	0	8	38					
	0	0	0	0	9	39					
					10	40					
					11	41					
					12	42					
					13	43					
					14	44					
					15	45					
					16	46					
					17	47					
					18	48					
					19	49					
					20	50					
					21	51					
					22	52					
					23	53					
					24	54					
					25	55					
					26	56					
					27	57					
					28	58					
					29	59					

Additional info (include steam dissipation point)

Observer's Signature: Jon Simpson

20071107 Method 9 Inspection Form.doc

OCS Environmental, Inc.
Method 9 Source Layout Sketch

Date: 12,07,2007

Observer Name: Jon Simpson

Begin Time: 0910 Time End: 0909 45

No Sun Visible Times
0710, 0730, 0809,
0830, 0900, 0910

Observation Point

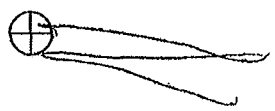

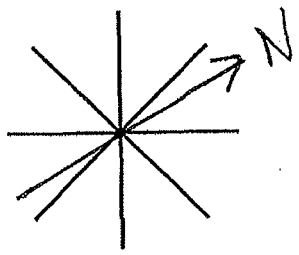

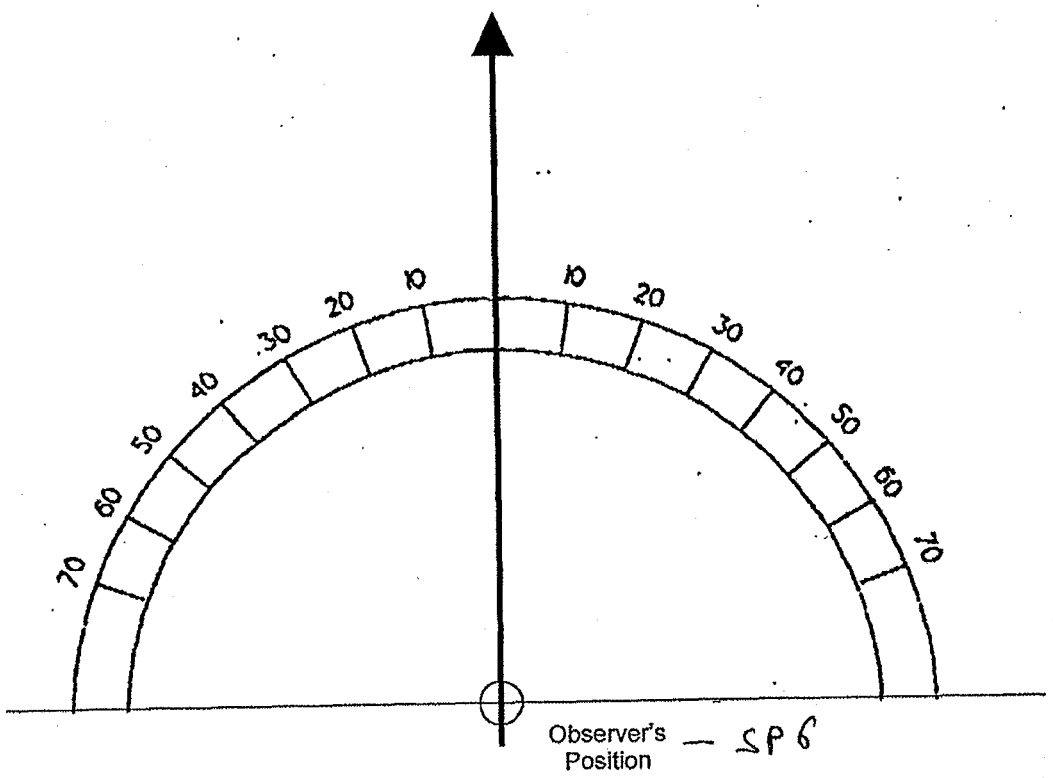

Signature: Jon Simpson

20071107 Method 9 Source Layout Sketch.doc

15-6

OCS Environmental, Inc.

U.S. Steel Gary Works
Emissions Inspection Summary

Date: 11 / 29 / 07

Start Time: 0700 AM / PM

End Time: 0859 AM / PM

No. 2 Precarbon ESP

BOP	Roof Monitor		Gas Cleaners	
QBOP	Roof Monitor		Gas Cleaners	
Blast Furnace	4	6	8	14
Blast Furnace Top	4	6	8	14

The following events or operations contributed to significant emissions:

Time	Heat/Cast Number	Operation	Comments

20071107 Inspection Summary.doc

OCS Environmental, Inc.
Method 9 VE Inspection Form

Page 1 of 2

			Start	End
Date:	11-29-07	Emissions color:	ASNOTO	
Source:	#2 BOP - Roof	Background:	SKY	Same
Observation Start Time:	0700	Sky Conditions:	CLEAR	
Observation End Time:	0759	Wind Speed:	9	
Observer's Position:	SP6	Wind Direction:	NW	
Distance to source:	225 yds	Ambient Temp:	18	
Direction to source:	NW	Relative Humidity%:	68%	
Height of source:	186'	Wet Bulb Temp:	—	
Vertical angle to source:	13°			

Plume Type: Attached Detached None

Comments	0	15	30	45			0	15	30	45	Comments
	0	0	0	0	0	30	0	0	0	0	
	0	0	0	0	1	31	0	0	0	0	
	0	0	0	0	2	32	0	0	0	0	
SCT-46476	0	0	0	0	3	33	0	0	0	0	
	0	0	0	0	4	34	0	0	0	0	RB-T
	0	0	0	0	5	35	0	0	0	0	TAP-T
	0	0	0	0	6	36	0	0	0	0	
	0	0	0	0	7	37	0	0	0	0	
	0	0	0	0	8	38	0	0	0	0	
	0	0	0	0	9	39	0	0	0	0	
	0	0	0	0	10	40	0	0	0	0	
HMC-T	0	0	0	0	11	41	0	0	0	0	
	0	0	0	0	12	42	0	0	0	0	
END HMC	0	0	0	0	13	43	0	0	0	0	
BLOW	0	0	0	0	14	44	0	0	0	0	
	0	0	0	0	15	45	0	0	0	0	
	0	0	0	0	16	46	0	0	0	0	
	0	0	0	0	17	47	0	0	0	0	
	0	0	0	0	18	48	0	0	0	0	
	0	0	0	0	19	49	0	0	0	0	
	0	0	0	0	20	50	0	0	0	0	
	0	0	0	0	21	51	0	0	0	0	
	0	0	0	0	22	52	0	0	0	0	SCT 46477
	0	0	0	0	23	53	0	0	0	0	
	0	0	0	0	24	54	0	0	0	0	
	0	0	0	0	25	55	0	0	0	0	
	0	0	0	0	26	56	0	0	0	0	
	0	0	0	0	27	57	0	0	0	0	
	0	0	0	0	28	58	0	0	0	0	
TD	0	0	0	0	29	59	0	0	0	0	

Additional info (include steam dissipation point)
T 46476

Observer's Signature [signature]

20071107 Method 9 Inspection Form.doc

OCS Environmental, Inc.
Method 9 VE Inspection Form

Date: 11-29-07
Source: #2 Q BOP-Roof
Observation Start Time: 0800
Observation End Time: 0859
Observer's Position: SP6
Distance to source: 225 yds
Direction to source: NW

Height of source: 186'
Vertical angle to source: 13°

	Start	End
Emissions color:	HB vapor	Sap
Background:	Sky	
Sky Conditions:	Clear	
Wind Speed:	9	
Wind Direction:	NW	
Ambient Temp:	18	
Relative Humidity%:	68%	
Wet Bulb Temp:	—	

Plume Type: Attached Detached None

Comments	0	15	30	45			0	15	30	45	Comments
HMC-T	0	0	0	0	0	30	0	0	0	0	
	0	0	0	0	1	31	0	0	0	0	
END HMC	0	0	0	0	2	32	0	0	0	0	
BLOW	0	0	0	0	3	33	0	0	0	0	
	0	0	0	0	4	34	0	0	0	0	
	0	0	0	0	5	35	0	0	0	0	
	0	0	0	0	6	36	0	0	0	0	
	0	0	0	0	7	37	0	0	0	0	
	0	0	0	0	8	38	0	0	0	0	
	0	0	0	0	9	39	0	0	0	0	
	0	0	0	0	10	40	0	0	0	0	
	0	0	0	0	11	41	0	0	0	0	
	0	0	0	0	12	42	0	0	0	0	
	0	0	0	0	13	43	0	0	0	0	
	0	0	0	0	14	44	0	0	0	0	
	0	0	0	0	15	45	0	0	0	0	
	0	0	0	0	16	46	0	0	0	0	
	0	0	0	0	17	47	0	0	0	0	
	0	0	0	0	18	48	0	0	0	0	
	0	0	0	0	19	49	0	0	0	0	
TD-T	0	0	0	0	20	50	0	0	0	0	SC-T46478
	0	0	0	0	21	51	0	0	0	0	
	0	0	0	0	22	52	0	0	0	0	
	0	0	0	0	23	53	0	0	0	0	
BB-T	0	0	0	0	24	54	0	0	0	0	
TAP-T46477	0	0	0	0	25	55	0	0	0	0	
	0	0	0	0	26	56	0	0	0	0	
	0	0	0	0	27	57	0	0	0	0	
	0	0	0	0	28	58	0	0	0	0	
	0	0	0	0	29	59	0	0	0	0	

Additional info (include steam dissipation point)

Observer's Signature

20071107 Method 9 Inspection Form.doc

OCS Environmental, Inc.
Method 9 Source Layout Sketch

Date: 11/29/07

Observer Name: J. SKACIK

Begin Time: 0700

Time End: 0859

No Sun Visible Times

Observation Point

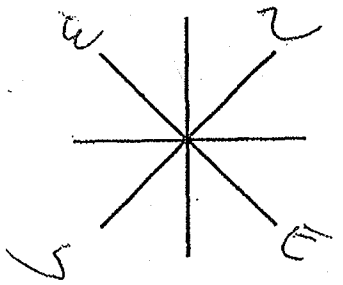

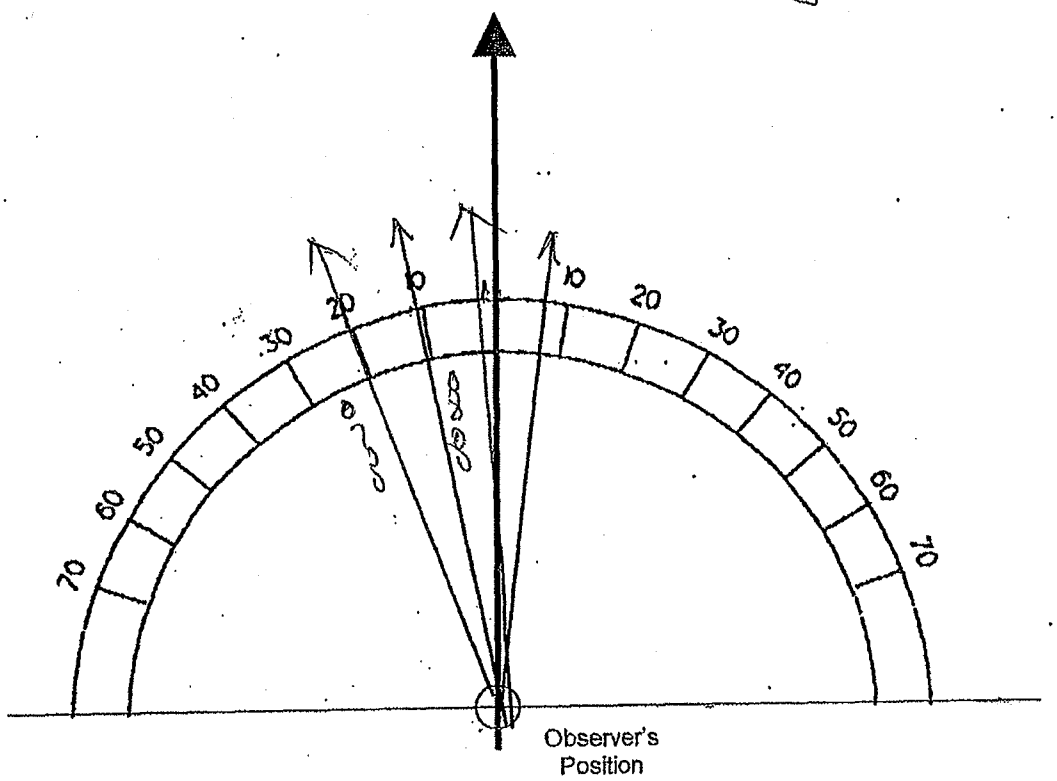

Signature:

20071107 Method 9 Source Layout Sketch.doc

15-7

OCS Environmental, Inc.

U.S. Steel Gary Works
Emissions Inspection Summary

Date: 11/13/07

Start Time: 0700 AM / PM

End Time: 0900 AM / PM

No. 2 Precarbon ESP

BOP	Roof Monitor		Gas Cleaners	
QBOP	Roof Monitor		Gas Cleaners	
Blast Furnace	4	6	8	14
Blast Furnace Top	4	6	8	14

The following events or operations contributed to significant emissions:

Time	Heat/Cast Number	Operation	Comments
	No excessive emissions observed		

20071107 Inspection Summary.doc

OCS Environmental, Inc.
Method 9 VE Inspection Form

Page 1 of 2

Date:	11-13-07
Source:	Q Bop GCS
Observation Start Time:	0700
Observation End Time:	0759
Observer's Position:	SP7
Distance to source:	350 yds
Direction to source:	NW 160°
Height of source:	190'
Vertical angle to source:	14°

	Start	End
Emissions color:	As Noted	Same
Background:	sky	
Sky Conditions:	Clear	
Wind Speed:	2	
Wind Direction:	E	
Ambient Temp:	38°	
Relative Humidity%:	100%	
Wet Bulb Temp:	N/A	

Plume Type: Attached Detached None

Comments	0	15	30	45			0	15	30	45	Comments
West stack	0	0	0	0	0	30	0	0	0	0	
	0	0	0	0	1	31	0	0	0	0	
	0	0	0	0	2	32	0	0	0	0	
	0	0	0	0	3	33	0	0	0	0	
	0	0	0	0	4	34	0	0	0	0	
	0	0	0	0	5	35	0	0	0	0	
	0	0	0	0	6	36	0	0	0	0	
	0	0	0	0	7	37	0	0	0	0	
	0	0	0	0	8	38	0	0	0	0	
	0	0	0	0	9	39	0	0	0	0	
	0	0	0	0	10	40	0	0	0	0	
	0	0	0	0	11	41	0	0	0	0	
	0	0	0	0	12	42	0	0	0	0	
	0	0	0	0	13	43	0	0	0	0	
	0	0	0	0	14	44	0	0	0	0	
	0	0	0	0	15	45	0	0	0	0	
	0	0	0	0	16	46	0	0	0	0	
	0	0	0	0	17	47	0	0	0	0	
	0	0	0	0	18	48	0	0	0	0	
	0	0	0	0	19	49	0	0	0	0	
	0	0	0	0	20	50	0	0	0	0	
	0	0	0	0	21	51	0	0	0	0	
	0	0	0	0	22	52	0	0	0	0	
	0	0	0	0	23	53	0	0	0	0	
	0	0	0	0	24	54	0	0	0	0	
	0	0	0	0	25	55	0	0	0	0	
	0	0	0	0	26	56	0	0	0	0	
	0	0	0	0	27	57	0	0	0	0	
	0	0	0	0	28	58	0	0	0	0	
	0	0	0	0	29	59	0	0	0	0	

Additional info (include steam dissipation point)

Observer's Signature

20071107 Method 9 Inspection Form.doc

OCS Environmental, Inc.
Method 9 VE Inspection Form

Date: 11-13-07
Source: Q Bop GCS
Observation Start Time: 0800
Observation End Time: 0859
Observer's Position: SP7
Distance to source: 350 yds
Direction to source: NW 160°

Height of source: 190'
Vertical angle to source: 140°

	Start	End
Emissions color:	As Notes	SAME
Background:	SKY	
Sky Conditions:	CLEAR	
Wind Speed:	2	
Wind Direction:	E	
Ambient Temp:	38°	
Relative Humidity%:	100%	
Wet Bulb Temp:	N/A	

Plume Type: Attached Detached None

Comments	0	15	30	45			0	15	30	45	Comments
EAST STACK	0	0	0	0	0	30	0	0	0	0	
	0	0	0	0	1	31	0	0	0	0	
	0	0	0	0	2	32	0	0	0	0	
	0	0	0	0	3	33	0	0	0	0	
	0	0	0	0	4	34	0	0	0	0	
	0	0	0	0	5	35	0	0	0	0	
	0	0	0	0	6	36	0	0	0	0	
	0	0	0	0	7	37	0	0	0	0	
	0	0	0	0	8	38	0	0	0	0	
	0	0	0	0	9	39	0	0	0	0	
	0	0	0	0	10	40	0	0	0	0	
	0	0	0	0	11	41	0	0	0	0	
	0	0	0	0	12	42	0	0	0	0	
	0	0	0	0	13	43	0	0	0	0	
	0	0	0	0	14	44	0	0	0	0	
	0	0	0	0	15	45	0	0	0	0	
	0	0	0	0	16	46	0	0	0	0	
	0	0	0	0	17	47	0	0	0	0	
	0	0	0	0	18	48	0	0	0	0	
	0	0	0	0	19	49	0	0	0	0	
	0	0	0	0	20	50	0	0	0	0	
	0	0	0	0	21	51	0	0	0	0	
	0	0	0	0	22	52	0	0	0	0	
	0	0	0	0	23	53	0	0	0	0	
	0	0	0	0	24	54	0	0	0	0	
	0	0	0	0	25	55	0	0	0	0	
	0	0	0	0	26	56	0	0	0	0	
	0	0	0	0	27	57	0	0	0	0	
	0	0	0	0	28	58	0	0	0	0	
	0	0	0	0	29	59	0	0	0	0	

Additional info (include steam dissipation point)

Observer's Signature

20071107 Method 9 Inspection Form.doc

OCS Environmental, Inc.
Method 9 Source Layout Sketch

Date: 11/13/07

Observer Name: R. Mackey

Begin Time: 0700

Time End: 0900

No Sun Visible Times

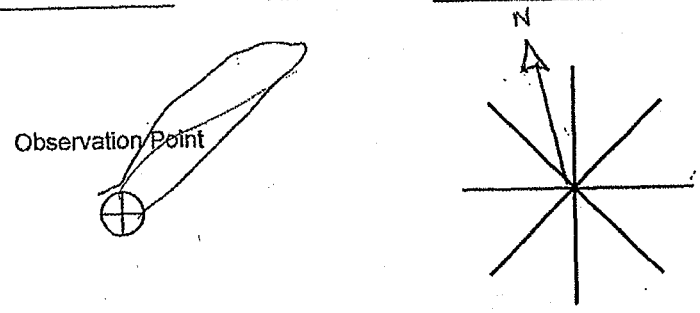

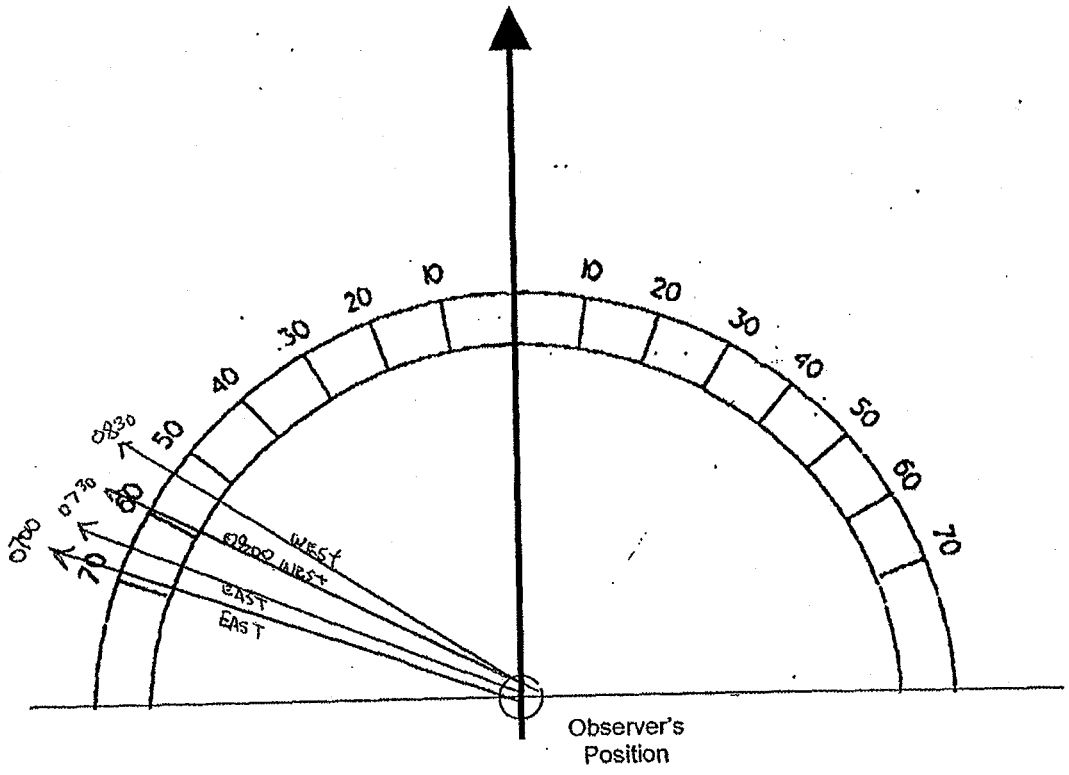

Signature: Rob J Mack

20071107 Method 9 Source Layout Sketch.doc

15-8

OCS Environmental, Inc.

U.S. Steel Gary Works
Emissions Inspection Summary

Date: 11 / 9 / 07

Start Time: 0700 AM / PM

End Time: 0900 AM / PM

No. 2 Precarbon ESP

BOP	Roof Monitor		Gas Cleaners	
QBOP	Roof Monitor		Gas Cleaners	
Blast Furnace	4	6	8	14
Blast Furnace Top	4	6	8	14

The following events or operations contributed to significant emissions:

Time	Heat/Cast Number	Operation	Comments

20071107 Inspection Summary.doc

OCS Environmental, Inc.
Method 9 VE Inspection Form

Page 1 of 2

Date: 11/9/07
Source: QDOP GC-
Observation Start Time: 0700
Observation End Time: 0800
Observer's Position: SP9
Distance to source: 325
Direction to source: NE

Height of source: 185
Vertical angle to source: 9

	Start	End
Emissions color:	As noted	Same
Background:	sky	
Sky Conditions:	cloudy	
Wind Speed:	4	
Wind Direction:	NW	
Ambient Temp:	35	
Relative Humidity%:	89	
Wet Bulb Temp:		

Plume Type: Attached Detached None

Comments	0	15	30	45			0	15	30	45	Comments
West	0	0	0	0	0	30	0	0	0	0	
	0	0	0	0	1	31	0	0	0	0	
	0	0	0	0	2	32	0	0	0	0	
	0	0	0	0	3	33	0	0	0	0	
	0	0	0	0	4	34	0	0	0	0	
	0	0	0	0	5	35	0	0	0	0	
	0	0	0	0	6	36	0	0	0	0	
	0	0	0	0	7	37	0	0	0	0	
	0	0	0	0	8	38	0	0	0	0	
	0	0	0	0	9	39	0	0	0	0	
	0	0	0	0	10	40	0	0	0	0	
	0	0	0	0	11	41	0	0	0	0	
	0	0	0	0	12	42	0	0	0	0	
	0	0	0	0	13	43	0	0	0	0	
	0	0	0	0	14	44	0	0	0	0	
	0	0	0	0	15	45	0	0	0	0	
	0	0	0	0	16	46	0	0	0	0	
	0	0	0	0	17	47	0	0	0	0	
	0	0	0	0	18	48	0	0	0	0	
	0	0	0	0	19	49	0	0	0	0	
	0	0	0	0	20	50	0	0	0	0	
	0	0	0	0	21	51	0	0	0	0	
	0	0	0	0	22	52	0	0	0	0	
	0	0	0	0	23	53	0	0	0	0	
	0	0	0	0	24	54	0	0	0	0	
	0	0	0	0	25	55	0	0	0	0	
	0	0	0	0	26	56	0	0	0	0	
	0	0	0	0	27	57	0	0	0	0	
	0	0	0	0	28	58	0	0	0	0	
	0	0	0	0	29	59	0	0	0	0	

Additional info (include steam dissipation point)

Observer's Signature: [signature]

20071107 Method 9 Inspection Form.doc

OCS Environmental, Inc.
Method 9 VE Inspection Form

Date: 11/9/07
Source: QBoc GC
Observation Start Time: 0800
Observation End Time: 0900
Observer's Position: SP9
Distance to source: 325
Direction to source: NE

Height of source: 185
Vertical angle to source: 9

	Start	End
Emissions color:	As noted	Same
Background:	sky	
Sky Conditions:	Cloudy	
Wind Speed:	4	
Wind Direction:	NW	
Ambient Temp:	35	
Relative Humidity%:	89	
Wet Bulb Temp:		

Plume Type: Attached Detached None

Comments	0	15	30	45			0	15	30	45	Comments
East	0	0	0	0	0	30	0	0	0	0	
	0	0	0	0	1	31	0	0	0	0	
	0	0	0	0	2	32	0	0	0	0	
	0	0	0	0	3	33	0	0	0	0	
	0	0	0	0	4	34	0	0	0	0	
	0	0	0	0	5	35	0	0	0	0	
	0	0	0	0	6	36	0	0	0	0	
	0	0	0	0	7	37	0	0	0	0	
	0	0	0	0	8	38	0	0	0	0	
	0	0	0	0	9	39	0	0	0	0	
	0	0	0	0	10	40	0	0	0	0	
	0	0	0	0	11	41	0	0	0	0	
	0	0	0	0	12	42	0	0	0	0	
	0	0	0	0	13	43	0	0	0	0	
	0	0	0	0	14	44	0	0	0	0	
	0	0	0	0	15	45	0	0	0	0	
	0	0	0	0	16	46	0	0	0	0	
	0	0	0	0	17	47	0	0	0	0	
	0	0	0	0	18	48	0	0	0	0	
	0	0	0	0	19	49	0	0	0	0	
	0	0	0	0	20	50	0	0	0	0	
	0	0	0	0	21	51	0	0	0	0	
	0	0	0	0	22	52	0	0	0	0	
	0	0	0	0	23	53	0	0	0	0	
	0	0	0	0	24	54	0	0	0	0	
	0	0	0	0	25	55	0	0	0	0	
	0	0	0	0	26	56	0	0	0	0	
	0	0	0	0	27	57	0	0	0	0	
	0	0	0	0	28	58	0	0	0	0	
	0	0	0	0	29	59	0	0	0	0	

Additional info (include steam dissipation point)

Observer's Signature: Clarence Patterson

20071107 Method 9 Inspection Form.doc

OCS Environmental, Inc.
Method 9 Source Layout Sketch

Date: 11, 9, 07

Observer Name: Clarence Patterson

Begin Time: 0700 Time End: 0900

No Sun Visible Times
0700
0730
0900
0930

Observation Point

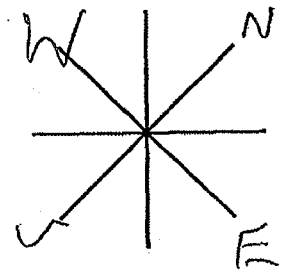

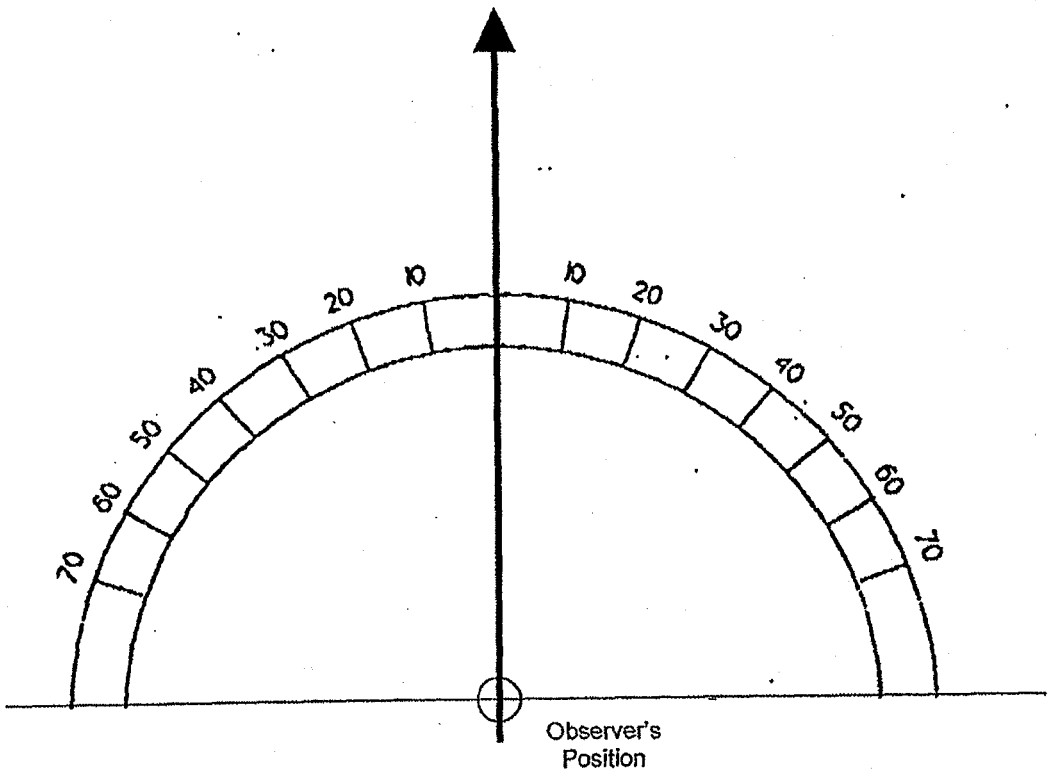

Signature: Clarence Patterson

20071107 Method 9 Source Layout Sketch.doc

15-9

OCS Environmental, Inc.

U.S. Steel Gary Works
Emissions Inspection Summary

Date: 12 14 07

Start Time: 0700 AM / PM

End Time: 0900 AM / PM

No. 2 Precarbon ESP

BOP	Roof Monitor		Gas Cleaners	
QBOP	Roof Monitor		Gas Cleaners	
Blast Furnace	4	6	8	14
Blast Furnace Top	4	6	8	14

The following events or operations contributed to significant emissions:

Time	Heat/Cast Number	Operation	Comments
	NO EMISSIONS		

20071107 Inspection Summary.doc

OCS Environmental, Inc.
Method 9 VE Inspection Form

Page 1 of 2

Date: 12-4-07
Source: 2QBOP ROOF
Observation Start Time: 0700
Observation End Time: 0759.45
Observer's Position: SP6
Distance to source: 225 Yds
Direction to source: NW 70°

Height of source: 186 Ft.
Vertical angle to source: 13°

	Start	End
Emissions color:	As Noted	Same
Background:	Sky	
Sky Conditions:	Overcast	
Wind Speed:	5mph	
Wind Direction:	N	
Ambient Temp:	30°	
Relative Humidity%:	70%	
Wet Bulb Temp:	NA	

Plume Type: (Attached) Detached None

Comments	0	15	30	45			0	15	30	45	Comments
Y49272 BLOW	0	0	0	0	0	30	0	0	0	0	
	0	0	0	0	1	31	0	0	0	0	
	0	0	0	0	2	32	0	0	0	0	
	0	0	0	0	3	33	0	0	0	0	SC-W47589
	0	0	0	0	4	34	0	0	0	0	
	0	0	0	0	5	35	0	0	0	0	
	0	0	0	0	6	36	0	0	0	0	
	0	0	0	0	7	37	0	0	0	0	
	0	0	0	0	8	38	0	0	0	0	
	0	0	0	0	9	39	0	0	0	0	HMC-W
TD Y	0	0	0	0	10	40	0	0	0	0	
	0	0	0	0	11	41	0	0	0	0	
	0	0	0	0	12	42	0	0	0	0	HMC: Blow-W
	0	0	0	0	13	43	0	0	0	0	
	0	0	0	0	14	44	0	0	0	0	
RB-Y	0	0	0	0	15	45	0	0	0	0	
	0	0	0	0	16	46	0	0	0	0	
	0	0	0	0	17	47	0	0	0	0	
T-Y	0	0	0	0	18	48	0	0	0	0	
	0	0	0	0	19	49	0	0	0	0	
	0	0	0	0	20	50	0	0	0	0	
	0	0	0	0	21	51	0	0	0	0	
	0	0	0	0	22	52	0	0	0	0	
	0	0	0	0	23	53	0	0	0	0	
	0	0	0	0	24	54	0	0	0	0	
	0	0	0	0	25	55	0	0	0	0	
	0	0	0	0	26	56	0	0	0	0	
	0	0	0	0	27	57	0	0	0	0	
	0	0	0	0	28	58	0	0	0	0	TD-W
	0	0	0	0	29	59	0	0	0	0	

Additional info (include steam dissipation point)

Observer's Signature: R. Milsap

20071107 Method 9 Inspection Form.doc

OCS Environmental, Inc.
Method 9 VE Inspection Form

Date: 12-4-07
Source: 20 BoP Roof
Observation Start Time: 0800
Observation End Time: 0859 40
Observer's Position: SP6
Distance to source: 225 Yds
Direction to source: NW 10°

Height of source: 186 Ft.
Vertical angle to source: 13°

	Start	End
Emissions color:	As Noted	Same
Background:	Sky	↓
Sky Conditions:	Overcast	↓
Wind Speed:	5 mph	↓
Wind Direction:	Ø	↓
Ambient Temp:	30°	↓
Relative Humidity%:	70%	↓
Wet Bulb Temp:	NA	

Plume Type: (Attached) Detached None

Comments	0	15	30	45			0	15	30	45	Comments
	0	0	0	0	0	30	0	0	0	0	
	0	0	0	0	1	31	0	0	0	0	
	0	0	0	0	2	32	0	0	0	0	
	0	0	0	0	3	33	0	0	0	0	
RB - W	0	0	0	0	4	34	0	0	0	0	TD - Y
	0	0	0	0	5	35	0	0	0	0	
TAP - W	0	0	0	0	6	36	0	0	0	0	
	0	0	0	0	7	37	0	0	0	0	RB - Y
	0	0	0	0	8	38	0	0	0	0	
	0	0	0	0	9	39	0	0	0	0	
SC - Y49273	0	0	0	0	10	40	0	0	0	0	TAP - Y
	0	0	0	0	11	41	0	0	0	0	
	0	0	0	0	12	42	0	0	0	0	
	0	0	0	0	13	43	0	0	0	0	
	0	0	0	0	14	44	0	0	0	0	
	0	0	0	0	15	45	0	0	0	0	
CHm - Y	0	0	0	0	16	46	0	0	0	0	
	0	0	0	0	17	47	0	0	0	0	SC - W
Blow - Y	0	0	0	0	18	48	0	0	0	0	
	0	0	0	0	19	49	0	0	0	0	
	0	0	0	0	20	50	0	0	0	0	
	0	0	0	0	21	51	0	0	0	0	
	0	0	0	0	22	52	0	0	0	0	
	0	0	0	0	23	53	0	0	0	0	HmC - W
	0	0	0	0	24	54	0	0	0	0	
	0	0	0	0	25	55	0	0	0	0	
	0	0	0	0	26	56	0	0	0	0	Blow - W
	0	0	0	0	27	57	0	0	0	0	
	0	0	0	0	28	58	0	0	0	0	
	0	0	0	0	29	59	0	0	0	0	

Additional info (include steam dissipation point)

Observer's Signature: R. Milsap

20071107 Method 9 Inspection Form.doc

OCS Environmental, Inc.
Method 9 Source Layout Sketch

Date: 12 14 07

Observer Name: R. MILSAP

Begin Time: 0700

Time End: 0859

No Sun Visible Times

0700
0730
0800
0830

Observation Point

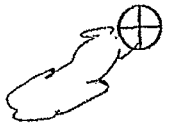

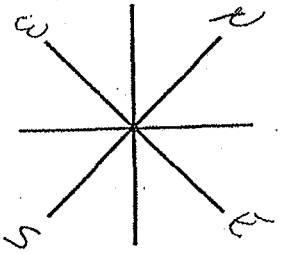

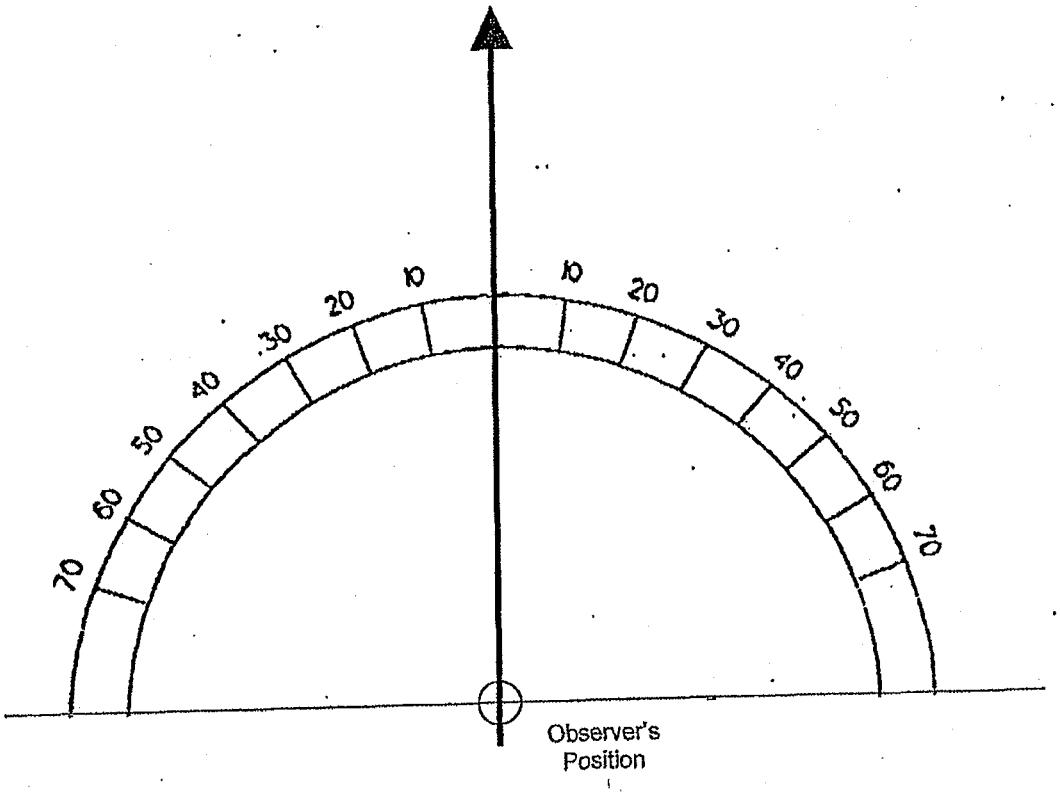

Signature: R. Milsap

20071107 Method 9 Source Layout Sketch.doc