Iron and Steel Subsidiary Source Audit
USS Gary Works

Date: 12-20-09
Inspector: D. Walsh

Start Time: 07:12
End Time: 16:22

	Monitor Point	Emissions?		Time
1	No. 4 Blast Furnace Top	No ☑	Yes ☐	07:27
2	No. 4 Blast Furnace Relief Valve	No ☑	Yes ☐	07:32
3	No. 6 Blast Furnace Top	No ☑	Yes ☐	07:37
4	No. 6 Blast Furnace Relief Valve	No ☑	Yes ☐	07:42
5	No. 8 Blast Furnace Top	No ☑	Yes ☐	07:47
6	No. 8 Blast Furnace Relief Valve	No ☑	Yes ☐	07:52
7	No. 14 Blast Furnace Top	No ☑	Yes ☐	07:57 SD
8	No. 14 Blast Furnace Relief Valve	No ☑	Yes ☐	08:02 SD
1	No. 4 Blast Furnace Top	No ☑	Yes ☐	11:17
2	No. 4 Blast Furnace Relief Valve	No ☑	Yes ☐	11:22
3	No. 6 Blast Furnace Top	No ☑	Yes ☐	11:27
4	No. 6 Blast Furnace Relief Valve	No ☑	Yes ☐	11:32
5	No. 8 Blast Furnace Top	No ☑	Yes ☐	11:37
6	No. 8 Blast Furnace Relief Valve	No ☑	Yes ☐	11:42
7	No. 14 Blast Furnace Top	No ☑	Yes ☐	11:47 SD
8	No. 14 Blast Furnace Relief Valve	No ☑	Yes ☐	11:52 SD
1	No. 4 Blast Furnace Top	No ☑	Yes ☐	15:17
2	No. 4 Blast Furnace Relief Valve	No ☑	Yes ☐	15:22
3	No. 6 Blast Furnace Top	No ☑	Yes ☐	15:27
4	No. 6 Blast Furnace Relief Valve	No ☑	Yes ☐	15:32
5	No. 8 Blast Furnace Top	No ☑	Yes ☐	15:37
6	No. 8 Blast Furnace Relief Valve	No ☑	Yes ☐	15:42
7	No. 14 Blast Furnace Top	No ☑	Yes ☐	15:47 SD
8	No. 14 Blast Furnace Relief Valve	No ☑	Yes ☐	15:52 SD

Planned Bleeder Event

1	Blast Furnace No. 14	No ☑	Yes ☐	11:12 SD
2	Blast Furnace No. 14	No ☑	Yes ☐	15:12 SD
3	Blast Furnace No.	No ☐	Yes ☐	

~9750458.doc

#14 BF
PLANNED BLEEDER EVENT IN PROGRESS

OCS Environmental, Inc.
Method 9 VE Inspection Form

Page 1 of 1

			Start	End
Date:	12-20-09	Emissions color:	AS NOTED	SAME
Source:	#14 BF	Background:	Sky	↓
Observation Start Time:	07:12	Sky Conditions:	OVERCAST	↓
Observation End Time:	07:26:45	Wind Speed:	5	↓
Observer's Position:	14 BF 3	Wind Direction:	SW	↓
Distance to source:	540 YRDS	Ambient Temp:	31°	↓
Direction to source:	NW	Relative Humidity%:	88%	↓
Height of source:	302'	Wet Bulb Temp:	—	—
Vertical angle to source:	11°			

Plume Type: Attached Detached None

Comments	0	15	30	45			0	15	30	45	Comments
					0	30					
					1	31					
					2	32					
					3	33					
					4	34					
					5	35					
					6	36					
					7	37					
					8	38					
					9	39					
					10	40					
					11	41					
	0	0	0	0	12	42					
	0	0	0	0	13	43					
	0	0	0	0	14	44					
	0	0	0	0	15	45					
	0	0	0	0	16	46					
	0	0	0	0	17	47					
	0	0	0	0	18	48					
	0	0	0	0	19	49					
	0	0	0	0	20	50					
	0	0	0	0	21	51					
	0	0	0	0	22	52					
	0	0	0	0	23	53					
	0	0	0	0	24	54					
	0	0	0	0	25	55					
	0	0	0	0	26	56					
					27	57					
					28	58					
					29	59					

Additional info (include steam dissipation point)

Observer's Signature

D. Walk

20071107 Method 9 Inspection Form.doc

#14 BF
PLANNED
BLEEDER EVENT
IN PROGRESS

OCS Environmental, Inc.
Method 9 Source Layout Sketch

Date: 12/20/09

Observer Name: Walsh

Begin Time: 07:12

Time End: 07:26:45

No Sun Visible Times
07:12

Observation Point

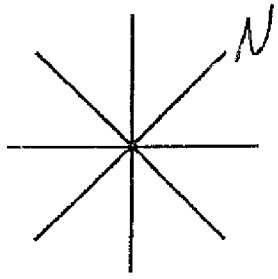

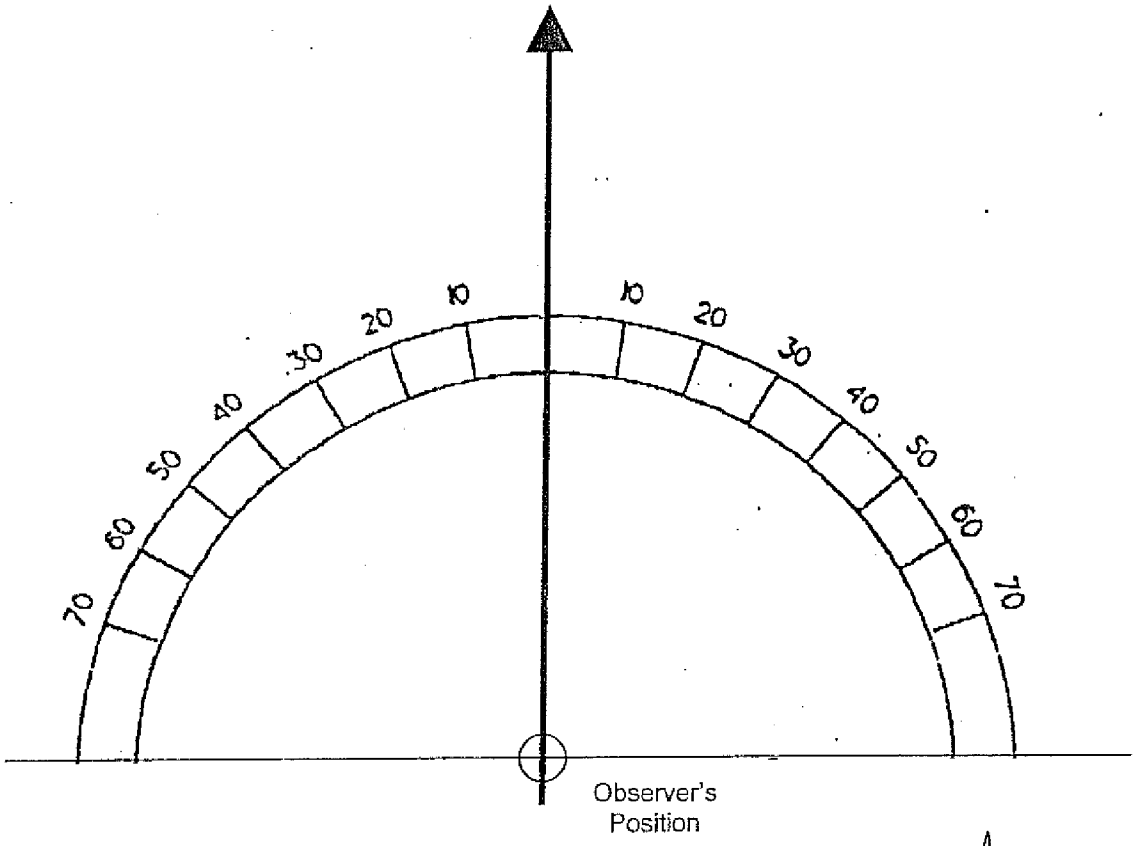

Signature: Doug Walsh

20071107 Method 9 Source Layout Sketch.doc

Iron and Steel Subsidiary Source Audit
USS Gary Works

Date: 12/21/09
Inspector: ALEX RICHARDSON

Start Time: 0743
End Time: 1622

	Monitor Point	Emissions?		Time	
1	No. 4 Blast Furnace Top	No ☑	Yes ☐	0743	
2	No. 4 Blast Furnace Relief Valve	No ☑	Yes ☐	0748	
3	No. 6 Blast Furnace Top	No ☑	Yes ☐	0753	
4	No. 6 Blast Furnace Relief Valve	No ☑	Yes ☐	0758	
5	No. 8 Blast Furnace Top	No ☑	Yes ☐	0803	
6	No. 8 Blast Furnace Relief Valve	No ☑	Yes ☐	0808	
7	No. 14 Blast Furnace Top	No ☑	Yes ☐	0813	SD
8	No. 14 Blast Furnace Relief Valve	No ☑	Yes ☐	0818	SD
1	No. 4 Blast Furnace Top	No ☑	Yes ☐	1143	
2	No. 4 Blast Furnace Relief Valve	No ☑	Yes ☐	1148	
3	No. 6 Blast Furnace Top	No ☑	Yes ☐	1153	
4	No. 6 Blast Furnace Relief Valve	No ☑	Yes ☐	1158	
5	No. 8 Blast Furnace Top	No ☑	Yes ☐	1203	
6	No. 8 Blast Furnace Relief Valve	No ☑	Yes ☐	1208	
7	No. 14 Blast Furnace Top	No ☑	Yes ☐	1213	SD
8	No. 14 Blast Furnace Relief Valve	No ☑	Yes ☐	1218	SD
1	No. 4 Blast Furnace Top	No ☑	Yes ☐	1543	
2	No. 4 Blast Furnace Relief Valve	No ☑	Yes ☐	1548	
3	No. 6 Blast Furnace Top	No ☑	Yes ☐	1553	
4	No. 6 Blast Furnace Relief Valve	No ☑	Yes ☐	1558	
5	No. 8 Blast Furnace Top	No ☑	Yes ☐	1603	
6	No. 8 Blast Furnace Relief Valve	No ☑	Yes ☐	1608	
7	No. 14 Blast Furnace Top	No ☑	Yes ☐	1613	SD
8	No. 14 Blast Furnace Relief Valve	No ☑	Yes ☐	1618	SD

Planned Bleeder Event

1	Blast Furnace No. 14	No ☑	Yes ☐	1113	SD
2	Blast Furnace No. 14	No ☑	Yes ☐	1513	SD
3	Blast Furnace No.	No ☐	Yes ☐		

~9750458.doc

OCS Environmental, Inc.
Method 9 VE Inspection Form

Page 1 of 1

			Start	End
Date:	12/21/09			
Source:	#14 Blast Furnace	Emissions color:	As Noted	Same
Observation Start Time:	0713	Background:	Sky	
Observation End Time:	0727	Sky Conditions:	Cloudy	
Observer's Position:	14BF3	Wind Speed:	8	
Distance to source:	540 yrds.	Wind Direction:	S	
Direction to source:	NW 280° from magnetic North	Ambient Temp:	28°	
		Relative Humidity%:	84%	
Height of source:	302	Wet Bulb Temp:	-	
Vertical angle to source:	11°			

Plume Type: (Attached) Detached None

Comments	0	15	30	45			0	15	30	45	Comments
					0	30					
					1	31					
Planned bleeder					2	32					
opening in progress					3	33					
					4	34					
					5	35					
					6	36					
					7	37					
					8	38					
					9	39					
					10	40					
					11	41					
					12	42					
	0	0	0	0	13	43					
	0	0	0	0	14	44					
	0	0	0	0	15	45					
	0	0	0	0	16	46					
	0	0	0	0	17	47					
	0	0	0	0	18	48					
	0	0	0	0	19	49					
	0	0	0	0	20	50					
	0	0	0	0	21	51					
	0	0	0	0	22	52					
	0	0	0	0	23	53					
	0	0	0	0	24	54					
	0	0	0	0	25	55					
	0	0	0	0	26	56					
	0	0	0	0	27	57					
					28	58					
					29	59					

Additional info (include steam dissipation point)

Observer's Signature: Alex Richardson

OCS Environmental, Inc.
Method 9 Source Layout Sketch

Date: 12/21/09

Observer Name: ALEX RICHARDSON

Begin Time: 0713 Time End: 0727

No Sun Visible Times
0713

Observation Point

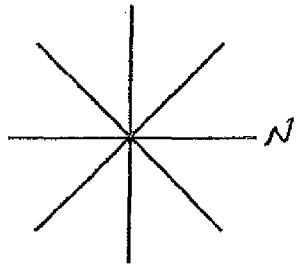

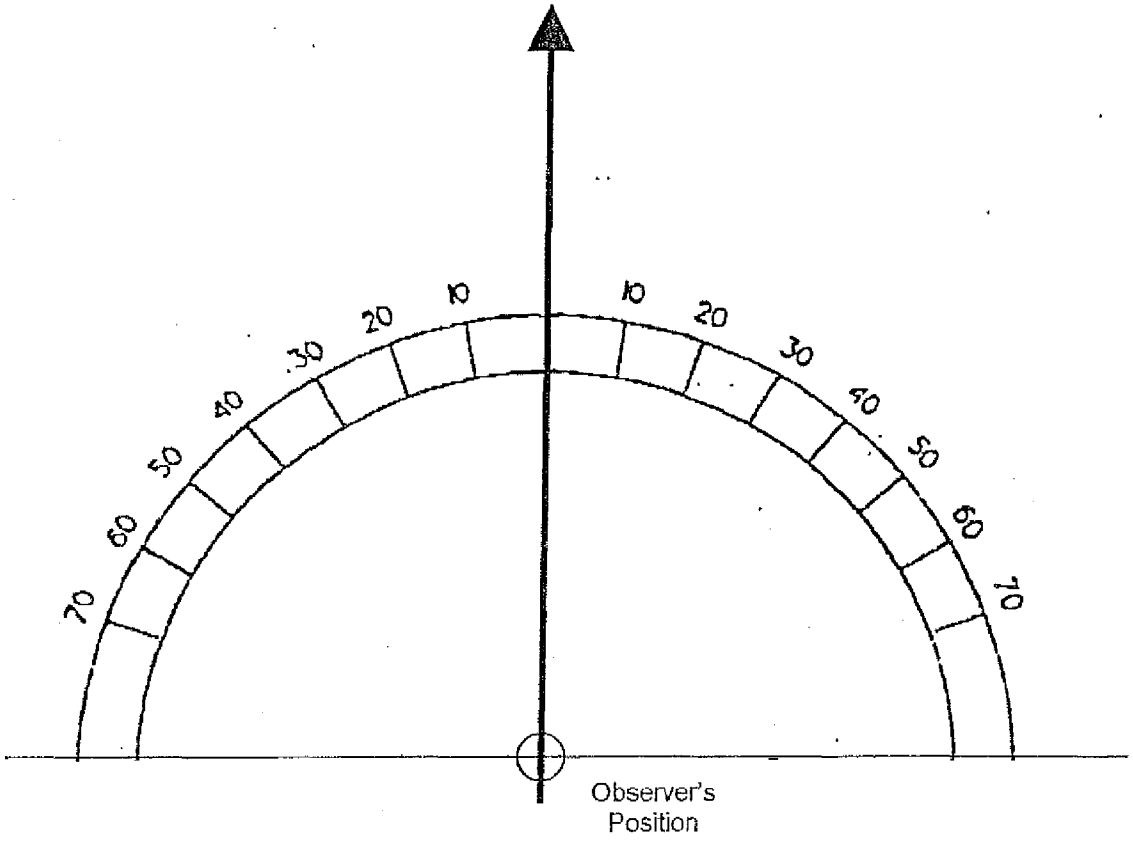

Signature: Alex Richardson

OCS Environmental, Inc.
Method 9 VE Inspection Form

			Start	End
Date:	12/21/09			
Source:	4 BLAST FURNACE	Emissions color:	AS NOTED	SAME
Observation Start Time:	0728	Background:	SKY	
Observation End Time:	0742	Sky Conditions:	CLOUDY	
Observer's Position:	4BF1	Wind Speed:	8	
Distance to source:	320 YRDS	Wind Direction:	S	
Direction to source:	NW 320° FROM MAGNETIC NORTH	Ambient Temp:	28°	
		Relative Humidity%:	84%	
Height of source:	225'-6"	Wet Bulb Temp:	-	
Vertical angle to source:	14°			

Plume Type: (Attached) Detached None

Comments	0	15	30	45			0	15	30	45	Comments
					0	30	0	0	0	0	
UNPLANNED BLEEDER					1	31	0	0	0	0	
LEAKING					2	32	0	0	0	0	
					3	33	0	0	0	0	
					4	34	0	0	0	0	
					5	35	0	0	0	0	
					6	36	0	0	0	0	
					7	37	0	0	0	0	
					8	38	0	0	0	0	
					9	39	0	0	0	0	
					10	40	0	0	0	0	
					11	41	0	0	0	0	
					12	42	0	0	0	0	
					13	43					
					14	44					
					15	45					
					16	46					
					17	47					
					18	48					
					19	49					
					20	50					
					21	51					
					22	52					
					23	53					
					24	54					
					25	55					
					26	56					
					27	57					
	0	0	0	0	28	58					
	0	0	0	0	29	59					

Additional info (include steam dissipation point)

Observer's Signature: Alex Richardson

OCS Environmental, Inc.
Method 9 Source Layout Sketch

Date: 12 / 21 / 09

Observer Name: ALEX RICHARDSON

Begin Time: 0728 Time End: 0742

No Sun Visible Times
0728

Observation Point

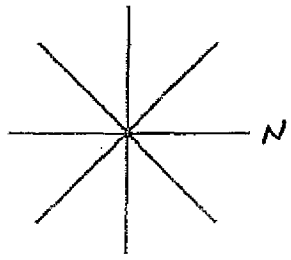

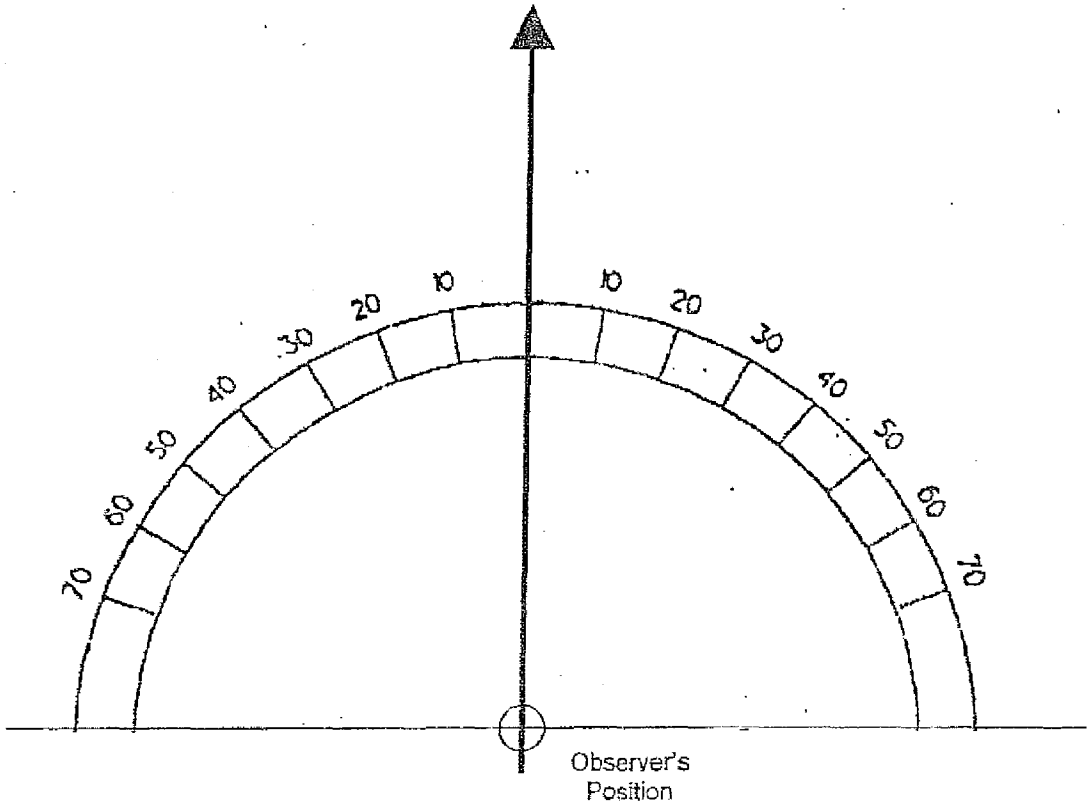

Signature: Alex Richardson

20071107 Method 9 Source Layout Sketch.doc

Iron and Steel Subsidiary Source Audit
USS Gary Works

Date: 12-22-09
Inspector: Dan Walsh

Start Time: 07:14
End Time: 16:23

	Monitor Point	Emissions?		Time
1	No. 4 Blast Furnace Top	No ☑	Yes ☐	07:14
2	No. 4 Blast Furnace Relief Valve	No ☑	Yes ☐	07:19
3	No. 6 Blast Furnace Top	No ☑	Yes ☐	07:24
4	No. 6 Blast Furnace Relief Valve	No ☑	Yes ☐	07:29
5	No. 8 Blast Furnace Top	No ☑	Yes ☐	07:34
6	No. 8 Blast Furnace Relief Valve	No ☑	Yes ☐	07:39
7	No. 14 Blast Furnace Top	No ☑	Yes ☐	07:44 SD
8	No. 14 Blast Furnace Relief Valve	No ☑	Yes ☐	07:49 SD
1	No. 4 Blast Furnace Top	No ☑	Yes ☐	11:14 SD
2	No. 4 Blast Furnace Relief Valve	No ☑	Yes ☐	11:19 SD
3	No. 6 Blast Furnace Top	No ☑	Yes ☐	11:24
4	No. 6 Blast Furnace Relief Valve	No ☑	Yes ☐	11:29
5	No. 8 Blast Furnace Top	No ☑	Yes ☐	11:34
6	No. 8 Blast Furnace Relief Valve	No ☑	Yes ☐	11:39
7	No. 14 Blast Furnace Top	No ☑	Yes ☐	11:44 SD
8	No. 14 Blast Furnace Relief Valve	No ☑	Yes ☐	11:49 SD
1	No. 4 Blast Furnace Top	No ☑	Yes ☐	15:14
2	No. 4 Blast Furnace Relief Valve	No ☑	Yes ☐	15:19
3	No. 6 Blast Furnace Top	No ☑	Yes ☐	15:24
4	No. 6 Blast Furnace Relief Valve	No ☑	Yes ☐	15:29
5	No. 8 Blast Furnace Top	No ☑	Yes ☐	15:34
6	No. 8 Blast Furnace Relief Valve	No ☑	Yes ☐	15:39
7	No. 14 Blast Furnace Top	No ☑	Yes ☐	15:44 SD
8	No. 14 Blast Furnace Relief Valve	No ☑	Yes ☐	15:49 SD

Planned Bleeder Event

1	Blast Furnace No. 4	No ☑	Yes ☐	14:49
2	Blast Furnace No.	No ☐	Yes ☐	
3	Blast Furnace No.	No ☐	Yes ☐	

#4 BF
BLEEDERS CLOSED
@ 13:48

~9750458.doc

#4 BF
PLANNED
BLEEDER EVENT

OCS Environmental, Inc.
Method 9 VE Inspection Form

Page 1 of 2

			Start	End
Date:	12-22-09	Emissions color:	AS NOTED	SAME
Source:	#4 BF	Background:	SKY	
Observation Start Time:	10:49	Sky Conditions:	OVERCAST	
Observation End Time:	10:59:45	Wind Speed:	2	
Observer's Position:	4 BF 1	Wind Direction:	S	
Distance to source:	320 YRDS	Ambient Temp:	29°	
Direction to source:	NW	Relative Humidity%:	93%	
Height of source:	235.6	Wet Bulb Temp:	–	
Vertical angle to source:	14°			

Plume Type: (Attached) Detached None

Comments	0	15	30	45			0	15	30	45	Comments
					0	30					
					1	31					
					2	32					
					3	33					
					4	34					
					5	35					
					6	36					
					7	37					
					8	38					
					9	39					
					10	40					
					11	41					
					12	42					
					13	43					
					14	44					
					15	45					
					16	46					
					17	47					
					18	48					
					19	49	0	0	0	0	
					20	50	0	0	0	0	
					21	51	0	0	0	0	
					22	52	0	0	0	0	
					23	53	0	0	0	0	
					24	54	0	0	0	0	
					25	55	0	0	0	0	
					26	56	0	0	0	0	
					27	57	0	0	0	0	
					28	58	0	0	0	0	
					29	59	0	0	0	0	

Additional info (include steam dissipation point)

Observer's Signature

#4 BF
PLANNED
BLEEDER EVENT

O[illegible] Environmental, Inc.
Metl[illegible] 9 VE Inspection Form

			Start	End
Date:	12-22-09	Emissions color:	AS NOTED	SAME
Source:	#4 BF	Background:	SKY	
Observation Start Time:	11:00	Sky Conditions:	OVERCAST	
Observation End Time:	11:03:45	Wind Speed:	2	
Observer's Position:	4 BF 1	Wind Direction:	S	
Distance to source:	320 YRDS	Ambient Temp:	29°	
Direction to source:	N/W	Relative Humidity%:	93%	
		Wet Bulb Temp:	—	—
Height of source:	235.6			
Vertical angle to source:	14°			

Plume Type: (Attached) Detached None

Comments	0	15	30	45			0	15	30	45	Comments
	0	0	0	0	0	30					
	0	0	0	0	1	31					
	0	0	0	0	2	32					
	0	0	0	0	3	33					
					4	34					
					5	35					
					6	36					
					7	37					
					8	38					
					9	39					
					10	40					
					11	41					
					12	42					
					13	43					
					14	44					
					15	45					
					16	46					
					17	47					
					18	48					
					19	49					
					20	50					
					21	51					
					22	52					
					23	53					
					24	54					
					25	55					
					26	56					
					27	57					
					28	58					
					29	59					

Additional info (include steam dissipation point)

Observer's Signature

D[illegible]

#4 BF
PLANNED BLEEDER EVENT

OCS Environmental, Inc.
Method 9 Source Layout Sketch

Date: 12 / 22 / 09

Observer Name: WALSH

Begin Time: 10:49 Time End: 11:03:45

No Sun Visible Times
10:49

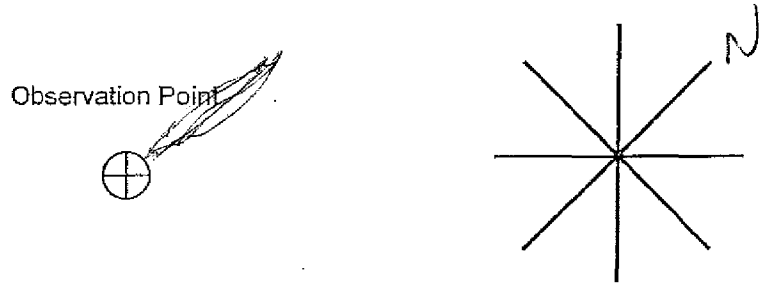

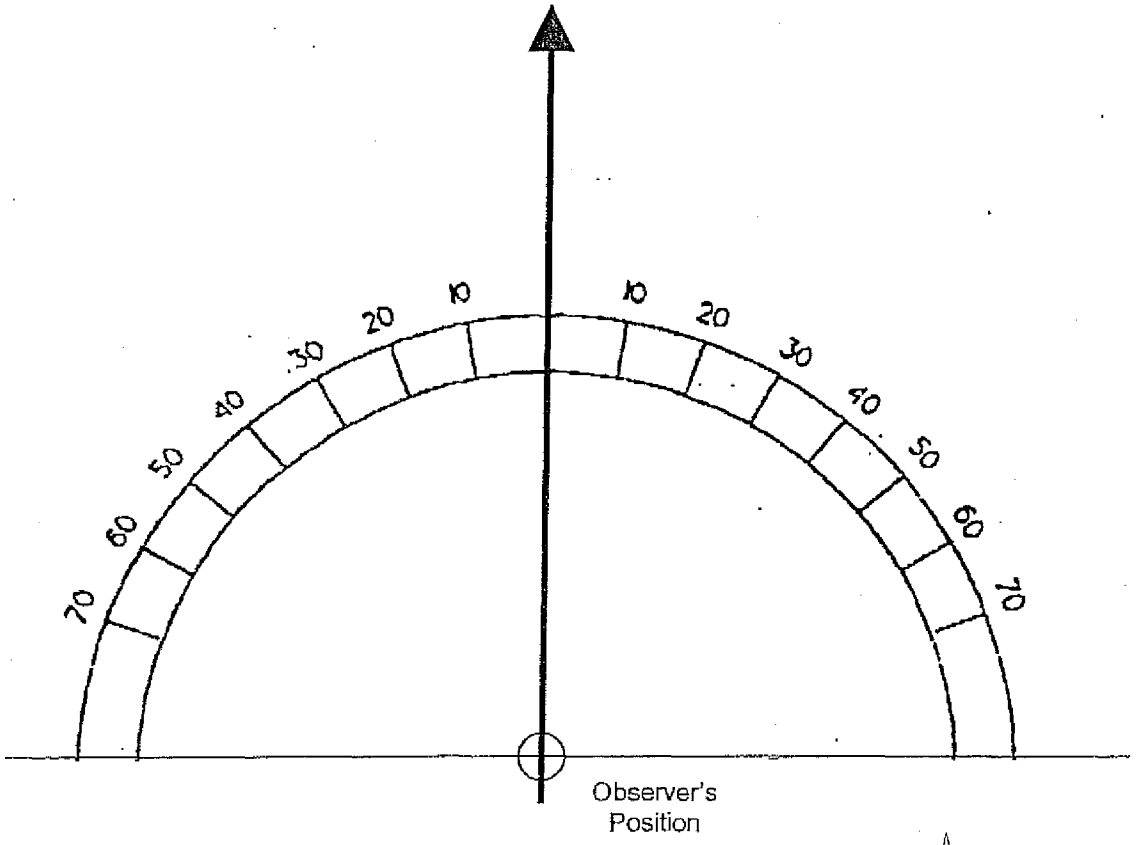

Signature: D. Walsh

20071107 Method 9 Source Layout Sketch.doc

Iron and Steel Subsidiary Source Audit
USS Gary Works

Date: 12/27/09
Inspector: ALEX RICHARDSON

Start Time: 0714
End Time: 1623

	Monitor Point	Emissions?		Time	
1	No. 4 Blast Furnace Top	No ☑	Yes ☐	0714	
2	No. 4 Blast Furnace Relief Valve	No ☑	Yes ☐	0719	
3	No. 6 Blast Furnace Top	No ☑	Yes ☐	0724	
4	No. 6 Blast Furnace Relief Valve	No ☑	Yes ☐	0729	
5	No. 8 Blast Furnace Top	No ☑	Yes ☐	0734	
6	No. 8 Blast Furnace Relief Valve	No ☑	Yes ☐	0739	
7	No. 14 Blast Furnace Top	No ☑	Yes ☐	0744	SD
8	No. 14 Blast Furnace Relief Valve	No ☑	Yes ☐	0749	SD
1	No. 4 Blast Furnace Top	No ☑	Yes ☐	1114	
2	No. 4 Blast Furnace Relief Valve	No ☑	Yes ☐	1119	
3	No. 6 Blast Furnace Top	No ☑	Yes ☐	1124	
4	No. 6 Blast Furnace Relief Valve	No ☑	Yes ☐	1129	
5	No. 8 Blast Furnace Top	No ☑	Yes ☐	1134	
6	No. 8 Blast Furnace Relief Valve	No ☑	Yes ☐	1139	
7	No. 14 Blast Furnace Top	No ☑	Yes ☐	1144	SD
8	No. 14 Blast Furnace Relief Valve	No ☑	Yes ☐	1149	SD
1	No. 4 Blast Furnace Top	No ☑	Yes ☐	1514	
2	No. 4 Blast Furnace Relief Valve	No ☑	Yes ☐	1519	
3	No. 6 Blast Furnace Top	No ☑	Yes ☐	1524	
4	No. 6 Blast Furnace Relief Valve	No ☑	Yes ☐	1529	
5	No. 8 Blast Furnace Top	No ☑	Yes ☐	1534	
6	No. 8 Blast Furnace Relief Valve	No ☑	Yes ☐	1539	
7	No. 14 Blast Furnace Top	No ☑	Yes ☐	1544	SD
8	No. 14 Blast Furnace Relief Valve	No ☑	Yes ☐	1549	SD

Planned Bleeder Event

1	Blast Furnace No._____	No ☐	Yes ☐	
2	Blast Furnace No._____	No ☐	Yes ☐	
3	Blast Furnace No._____	No ☐	Yes ☐	

~9750458.doc

Iron and Steel Subsidiary Source Audit
USS Gary Works

Date: 12-26-09
Inspector: J. SKALIK
R. Mackey

Start Time: 0715
End Time: 1625

	Monitor Point	Emissions? No	Emissions? Yes	Time
1	No. 4 Blast Furnace Top	☑	☐	0730
2	No. 4 Blast Furnace Relief Valve	☑	☐	0735
3	No. 6 Blast Furnace Top	☑	☐	0740
4	No. 6 Blast Furnace Relief Valve	☑	☐	0745
5	No. 8 Blast Furnace Top	☑	☐	0715 SD
6	No. 8 Blast Furnace Relief Valve	☑	☐	0715 SD
7	No. 14 Blast Furnace Top	☑	☐	0747 SD
8	No. 14 Blast Furnace Relief Valve	☑	☐	0752 SD
1	No. 4 Blast Furnace Top	☑	☐	11:25
2	No. 4 Blast Furnace Relief Valve	☑	☐	11 30
3	No. 6 Blast Furnace Top	☑	☐	11 40
4	No. 6 Blast Furnace Relief Valve	☑	☐	11 45
5	No. 8 Blast Furnace Top	☑	☐	11:15 SD
6	No. 8 Blast Furnace Relief Valve	☑	☐	11:20 SD
7	No. 14 Blast Furnace Top	☑	☐	11:52 SD
8	No. 14 Blast Furnace Relief Valve	☑	☐	11:57 SD
1	No. 4 Blast Furnace Top	☑	☐	1525
2	No. 4 Blast Furnace Relief Valve	☑	☐	1530
3	No. 6 Blast Furnace Top	☑	☐	1535
4	No. 6 Blast Furnace Relief Valve	☑	☐	1540
5	No. 8 Blast Furnace Top	☑	☐	1515 SD
6	No. 8 Blast Furnace Relief Valve	☑	☐	1520 SD
7	No. 14 Blast Furnace Top	☑	☐	1542 SD
8	No. 14 Blast Furnace Relief Valve	☑	☐	1547 SD

Planned Bleeder Event

1	Blast Furnace No. 8	☑	☐	0715
2	Blast Furnace No. 8	☑	☐	11:15
3	Blast Furnace No. 8	☑	☐	1515

~9750458.doc

PLANNED

OCS Environmental, Inc.
Method 9 VE Inspection Form

Page 1 of 1

			Start	End
Date:	12-26-09			
Source:	8370 Bleeder / ACW	Emissions color:	As Noted	Sp
Observation Start Time:	0715	Background:	Sky	
Observation End Time:	0729	Sky Conditions:	Ovcst	
Observer's Position:	8371	Wind Speed:	14	
Distance to source:	320, 405	Wind Direction:	SWrly	
Direction to source:	NW	Ambient Temp:	23°	
		Relative Humidity%:	87%	
Height of source:	234'6"	Wet Bulb Temp:		
Vertical angle to source:	14°			

Plume Type: (Attached) Detached None

Comments	0	15	30	45			0	15	30	45	Comments
0715	0	0	0	0	0	30					
	0	0	0	0	1	31					
	0	0	0	0	2	32					
	0	0	0	0	3	33					
	0	0	0	0	4	34					
20	0	0	0	0	5	35					
	0	0	0	0	6	36					
	0	0	0	0	7	37					
	0	0	0	0	8	38					
	0	0	0	0	9	39					
25	0	0	0	0	10	40					
	0	0	0	0	11	41					
	0	0	0	0	12	42					
	0	0	0	0	13	43					
	0	0	0	0	14	44					
30					15	45					
					16	46					
					17	47					
					18	48					
					19	49					
					20	50					
					21	51					
					22	52					
					23	53					
					24	54					
					25	55					
					26	56					
					27	57					
					28	58					
					29	59					

Additional info (include steam dissipation point)

150'

Observer's Signature

OCS Environmental, Inc.
Method 9 Source Layout Sketch

Date: 12 12 6 09

Observer Name: J. SKALK

Begin Time: 0715 Time End: 0729

No Sun Visible Times
0715
0729

Observation Point

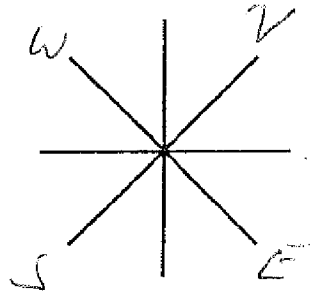

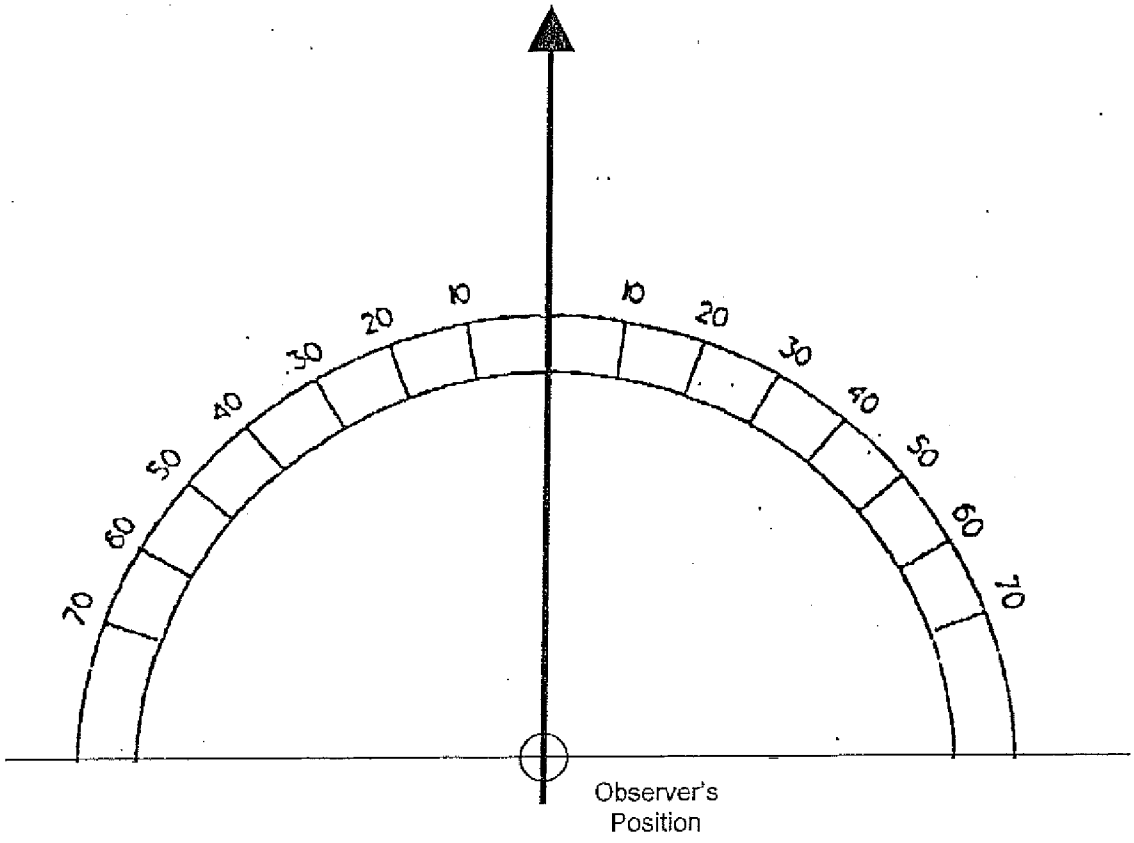

Signature:

OCS Environmental, Inc.
Method 9 VE Inspection Form

Page 1 of 1

			Start	End
Date:	12-26-09	Emissions color:	AS NOTED	S.O
Source:	FROM BEACH	Background:	SKY	
Observation Start Time:	1110	Sky Conditions:	OVC ST	
Observation End Time:	1117	Wind Speed:	14	
Observer's Position:	NE of Source	Wind Direction:	SOUTH	
Distance to source:	250 yds	Ambient Temp:	240	
Direction to source:	SW	Relative Humidity%:	85 %	
Height of source:	100'	Wet Bulb Temp:		
Vertical angle to source:	8°			

Plume Type: Attached Detached None

Comments	0	15	30	45			0	15	30	45	Comments
1110	0	0	0	0	0	30					
	0	0	0	0	1	31					
	0	0	0	0	2	32					
BRN	5	5	5	10	3	33					
	5	5	0	0	4	34					
15	0	0	0	0	5	35					
	0	0	0	0	6	36					
	0	0	0	0	7	37					
					8	38					
					9	39					
20					10	40					
					11	41					
					12	42					
					13	43					
					14	44					
					15	45					
					16	46					
					17	47					
					18	48					
					19	49					
					20	50					
					21	51					
					22	52					
					23	53					
					24	54					
					25	55					
					26	56					
					27	57					
					28	58					
					29	59					

Additional info (include steam dissipation point)
LADLE # 142 FROM # 8 BFCE
INTO KISH PIT

Observer's Signature

20071107 Method 9 Inspection Form.doc

OCS Environmental, Inc.
Method 9 Source Layout Sketch

Date: 12/26/09

Observer Name: J. SKACR

Begin Time: 1110 Time End: 1117

No Sun Visible Times
1110
1117

Observation Point

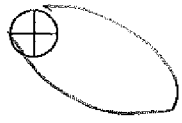

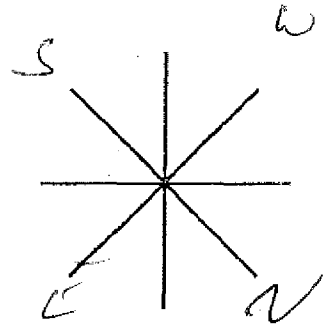

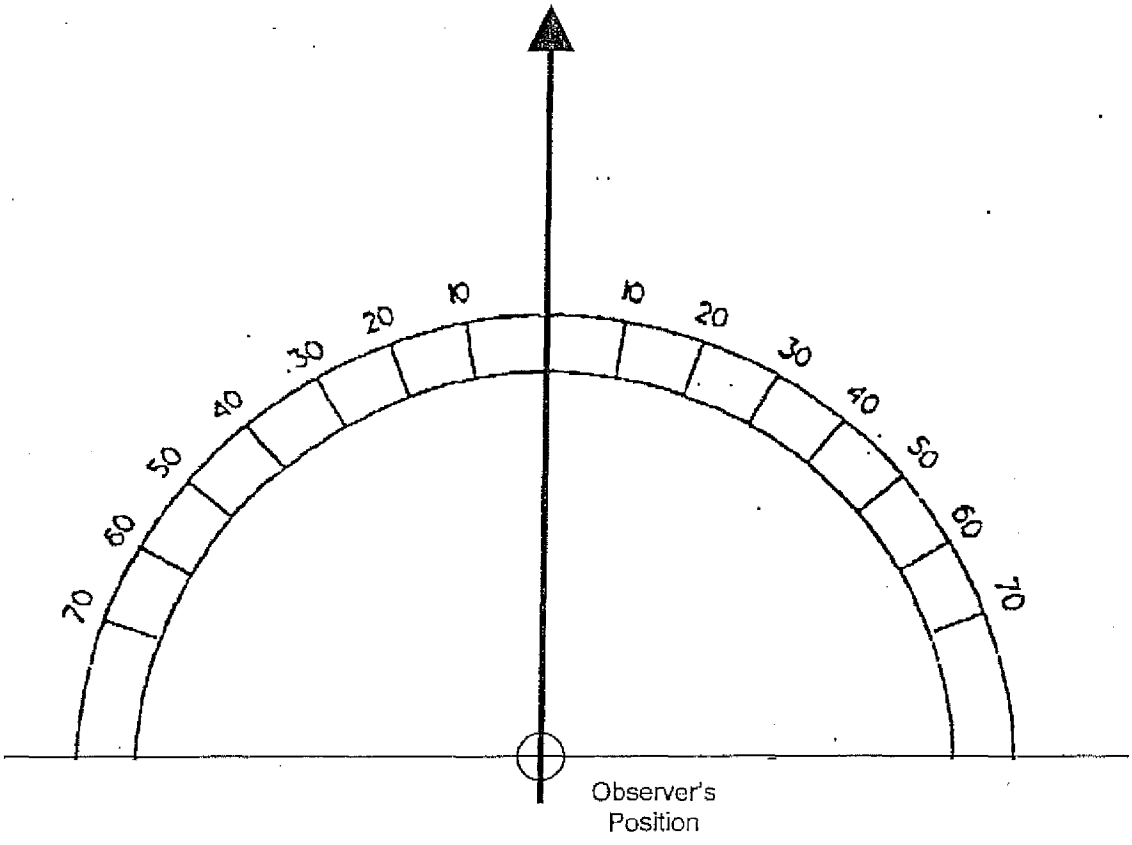

Signature: