Iron and Steel Subsidiary Source Audit
USS Gary Works

Date: 11-22-09
Inspector: Doug Wolff

Start Time: 07:00
End Time: 15:40

	Monitor Point	Emissions?		Time
1	No. 4 Blast Furnace Top	No ☑	Yes ☐	07:00
2	No. 4 Blast Furnace Relief Valve	No ☑	Yes ☐	07:05
3	No. 6 Blast Furnace Top	No ☑	Yes ☐	07:10
4	No. 6 Blast Furnace Relief Valve	No ☑	Yes ☐	07:15
5	No. 8 Blast Furnace Top	No ☑	Yes ☐	07:20
6	No. 8 Blast Furnace Relief Valve	No ☑	Yes ☐	07:25
7	No. 14 Blast Furnace Top	No ☑	Yes ☐	07:30
8	No. 14 Blast Furnace Relief Valve	No ☑	Yes ☐	07:35
1	No. 4 Blast Furnace Top	No ☑	Yes ☐	11:00
2	No. 4 Blast Furnace Relief Valve	No ☑	Yes ☐	11:05
3	No. 6 Blast Furnace Top	No ☑	Yes ☐	11:10
4	No. 6 Blast Furnace Relief Valve	No ☑	Yes ☐	11:15
5	No. 8 Blast Furnace Top	No ☑	Yes ☐	11:20 SD
6	No. 8 Blast Furnace Relief Valve	No ☑	Yes ☐	11:25 SD
7	No. 14 Blast Furnace Top	No ☑	Yes ☐	11:35
8	No. 14 Blast Furnace Relief Valve	No ☑	Yes ☐	11:40
1	No. 4 Blast Furnace Top	No ☑	Yes ☐	15:00
2	No. 4 Blast Furnace Relief Valve	No ☑	Yes ☐	15:05
3	No. 6 Blast Furnace Top	No ☑	Yes ☐	15:10
4	No. 6 Blast Furnace Relief Valve	No ☑	Yes ☐	15:15
5	No. 8 Blast Furnace Top	No ☑	Yes ☐	15:20
6	No. 8 Blast Furnace Relief Valve	No ☑	Yes ☐	15:25
7	No. 14 Blast Furnace Top	No ☑	Yes ☐	15:30
8	No. 14 Blast Furnace Relief Valve	No ☑	Yes ☐	15:35

Planned Bleeder Event

1	Blast Furnace No. 8	No ☑	Yes ☐	11:25
2	Blast Furnace No.	No ☐	Yes ☐	
3	Blast Furnace No.	No ☐	Yes ☐	

#8 BF Back on line @ 14:30
D.W.

#8 BF PLANNED BLEEDER EVENT

OCS Environmental, Inc.
Method 9 VE Inspection Form

Page 1 of 1

			Start	End
Date:	11-22-09	Emissions color:	AS NOTED	SAME
Source:	#8 BF	Background:	SKY	
Observation Start Time:	07:31	Sky Conditions:	CLEAR	
Observation End Time:	07:51:45	Wind Speed:	8	
Observer's Position:	8BF2	Wind Direction:	SE	
Distance to source:	350 YRDS	Ambient Temp:	40°	
Direction to source:	W	Relative Humidity%:	88%	
Height of source:	234.6'	Wet Bulb Temp:	—	
Vertical angle to source:	13°			

Plume Type: (Attached) Detached None

Comments	0	15	30	45			0	15	30	45	Comments
					0	30					
					1	31					
					2	32					
					3	33					
					4	34					
					5	35					
					6	36					
					7	37	0	0	0	0	
					8	38	0	0	0	0	
					9	39	0	0	0	0	
					10	40	0	0	0	0	
					11	41	0	0	0	0	
					12	42	0	0	0	0	
					13	43	0	0	0	0	
					14	44	0	0	0	0	
					15	45	0	0	0	0	
					16	46	0	0	0	0	
					17	47	0	0	0	0	
					18	48	0	0	0	0	
					19	49	0	0	0	0	
					20	50	0	0	0	0	
					21	51	0	0	0	0	
					22	52					
					23	53					
					24	54					
					25	55					
					26	56					
					27	57					
					28	58					
					29	59					

Additional info (include steam dissipation point)

Observer's Signature

Danny Walsh

20071107 Method 9 Inspection Form.doc

#8 BF

PLANNED BLEEDER EVENT

OCS Environmental, Inc.
Method 9 Source Layout Sketch

Date: 11 122 109

Observer Name: WALSH

Begin Time: 07:37

Time End: 07:51:45

No Sun Visible Times

Observation Point

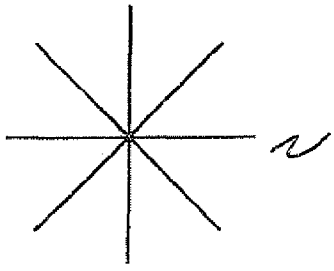

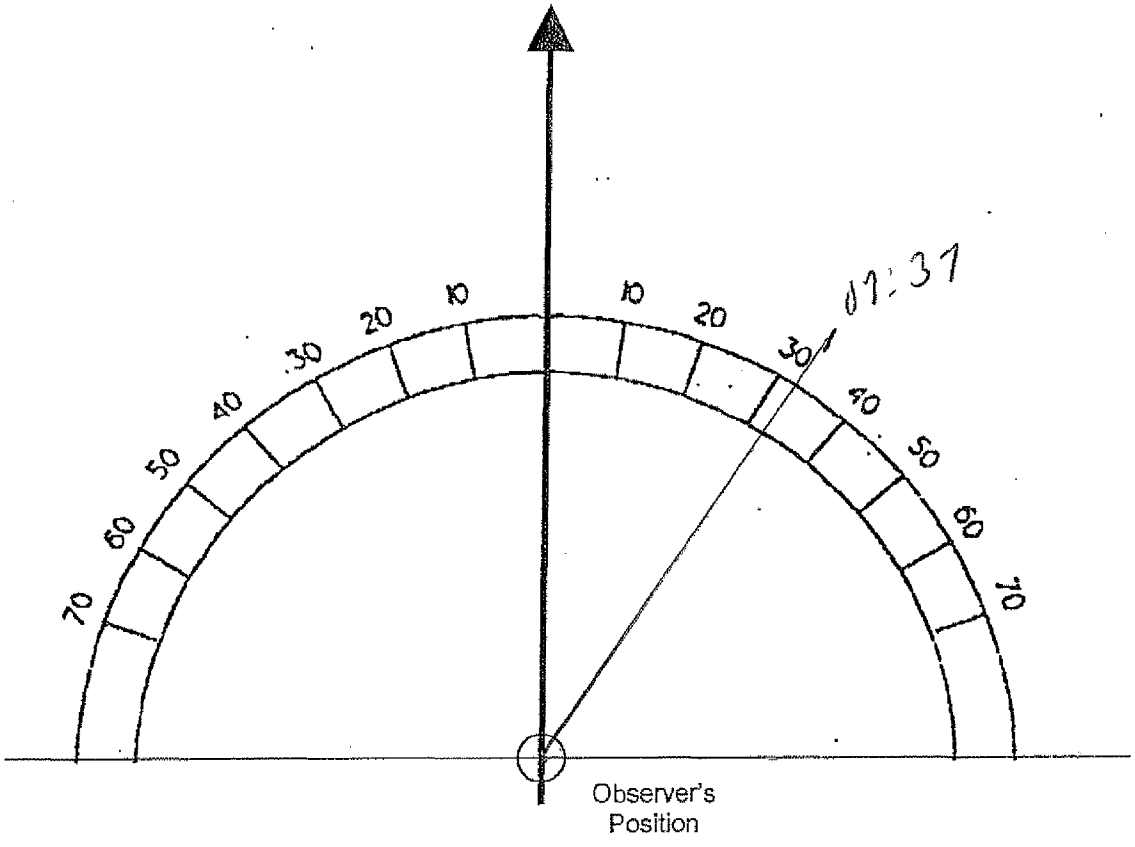

Signature: Dan Walsh

20071107 Method 9 Source Layout Sketch.doc

Iron and Steel Subsidiary Source Audit
USS Gary Works

Date: 11/23/09
Inspector: FRANK W GRUBACH

Start Time: 0650
End Time: 1530

	Monitor Point	Emissions?		Time
1	No. 4 Blast Furnace Top	No ☑	Yes ☐	0650
2	No. 4 Blast Furnace Relief Valve	No ☑	Yes ☐	0655
3	No. 6 Blast Furnace Top	No ☑	Yes ☐	0700
4	No. 6 Blast Furnace Relief Valve	No ☑	Yes ☐	0705
5	No. 8 Blast Furnace Top	No ☑	Yes ☐	0710
6	No. 8 Blast Furnace Relief Valve	No ☑	Yes ☐	0715
7	No. 14 Blast Furnace Top	No ☑	Yes ☐	0720
8	No. 14 Blast Furnace Relief Valve	No ☑	Yes ☐	0725
1	No. 4 Blast Furnace Top	No ☑	Yes ☐	1050
2	No. 4 Blast Furnace Relief Valve	No ☑	Yes ☐	1055
3	No. 6 Blast Furnace Top	No ☑	Yes ☐	1100
4	No. 6 Blast Furnace Relief Valve	No ☑	Yes ☐	1105
5	No. 8 Blast Furnace Top	No ☑	Yes ☐	1110
6	No. 8 Blast Furnace Relief Valve	No ☑	Yes ☐	1115
7	No. 14 Blast Furnace Top	No ☑	Yes ☐	1120
8	No. 14 Blast Furnace Relief Valve	No ☑	Yes ☐	1125
1	No. 4 Blast Furnace Top	No ☑	Yes ☐	1450
2	No. 4 Blast Furnace Relief Valve	No ☑	Yes ☐	1455
3	No. 6 Blast Furnace Top	No ☑	Yes ☐	1500
4	No. 6 Blast Furnace Relief Valve	No ☑	Yes ☐	1505
5	No. 8 Blast Furnace Top	No ☑	Yes ☐	1510
6	No. 8 Blast Furnace Relief Valve	No ☑	Yes ☐	1515
7	No. 14 Blast Furnace Top	No ☑	Yes ☐	1520
8	No. 14 Blast Furnace Relief Valve	No ☑	Yes ☐	1525

Planned Bleeder Event N/A

1	Blast Furnace No._____	No ☐	Yes ☐	
2	Blast Furnace No._____	No ☐	Yes ☐	
3	Blast Furnace No._____	No ☐	Yes ☐	

OCS Environmental, Inc.
Method 9 VE Inspection Form

GREY EMISSIONS FROM NO.4 BLAST FUR. TOP.

Page 1 of 1

			Start	End
Date:	11/23/09	Emissions color:	AS NOTED	SAME
Source:	NO.4 BLAST FURNACE TOP	Background:	SKY	
Observation Start Time:	0922:45	Sky Conditions:	OVERCAST	
Observation End Time:	0953:00	Wind Speed:	4	
Observer's Position:	4BFT	Wind Direction:	E	
Distance to source:	320 yds	Ambient Temp:	43°	
Direction to source:	NW 320° SRW MAGNETIC NORTH	Relative Humidity%:	89%	
Height of source:	162 ft	Wet Bulb Temp:	–	
Vertical angle to source:	10°			

Plume Type: (Attached) Detached None

Comments	0	15	30	45			0	15	30	45	Comments
					0	30	0	0	0	0	
					1	31	0	0	0	0	
					2	32	0	0	0	0	
					3	33	0	0	0	0	
					4	34	0	0	0	0	
					5	35	0	0	0	0	
					6	36	0	0	0	0	
					7	37	0	0	0	0	
					8	38	0	0	0	0	
					9	39	0	0	0	0	
					10	40	0	0	0	0	
					11	41	0	0	0	0	
					12	42	0	0	0	0	
					13	43	0	0	0	0	
					14	44	0	0	0	0	
					15	45	0	0	0	0	
					16	46	0	0	0	0	
					17	47	0	0	0	0	
					18	48	0	0	0	0	
					19	49	0	0	0	0	
					20	50	0	0	0	0	
					21	51	0	0	0	0	
				20	22	52	0	0	0	0	
	5	5	0	10	23	53	0				
	5	5	0	0	24	54					
	10	5	5	0	25	55					
	0	0	0	0	26	56					
	0	0	0	0	27	57					
	0	0	0	0	28	58					
	0	0	0	0	29	59					

Additional info (include steam dissipation point)

Observer's Signature

20071107 Method 9 Inspection Form.doc

OCS Environmental, Inc.
Method 9 Source Layout Sketch

Date: 11 / 23 / 09

Observer Name: Frank W Gaubatch

Begin Time: 0922 Time End: 0953

No Sun Visible Times
0938

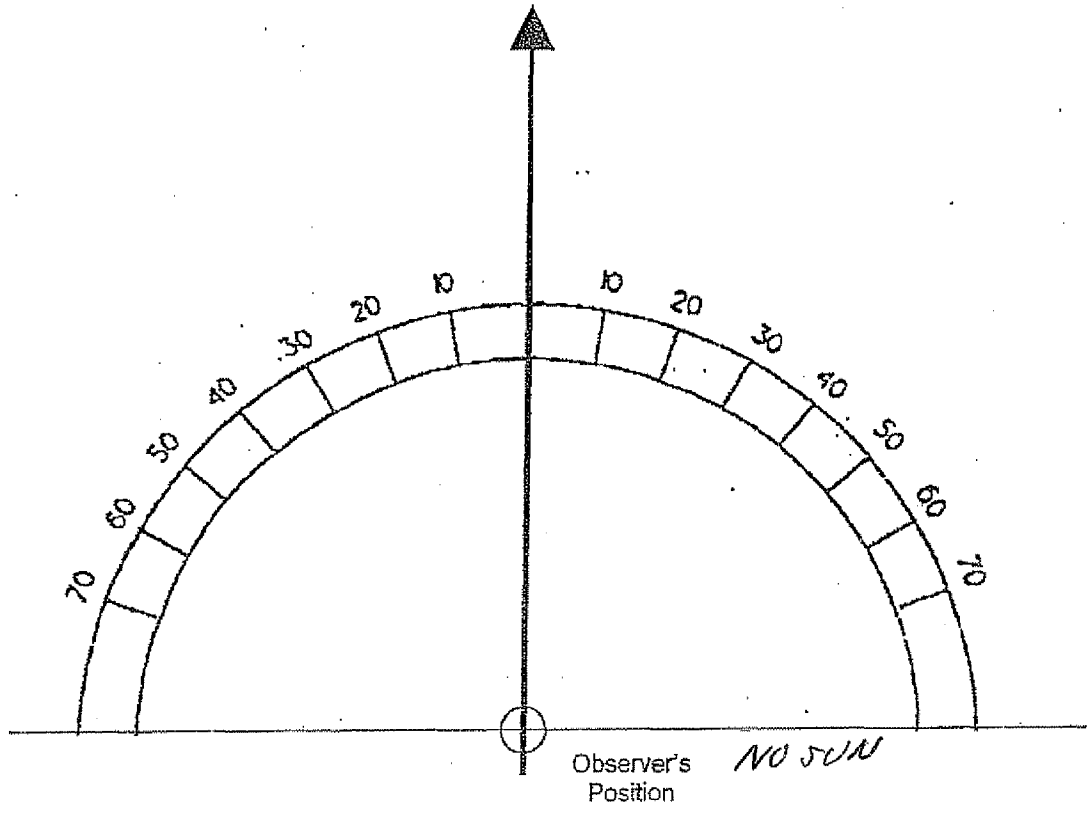

Signature:

20071107 Method 9 Source Layout Sketch.doc

Iron and Steel Subsidiary Source Audit
USS Gary Works

Date: 11/24/09 Start Time: 0706
Inspector: R. Mackey End Time: 1546

	Monitor Point	Emissions?		Time
1	No. 4 Blast Furnace Top	No ☑	Yes ☐	0706 SD
2	No. 4 Blast Furnace Relief Valve	No ☑	Yes ☐	0711 SD
3	No. 6 Blast Furnace Top	No ☑	Yes ☐	0716
4	No. 6 Blast Furnace Relief Valve	No ☑	Yes ☐	0721
5	No. 8 Blast Furnace Top	No ☑	Yes ☐	0726
6	No. 8 Blast Furnace Relief Valve	No ☑	Yes ☐	0731
7	No. 14 Blast Furnace Top	No ☑	Yes ☐	0736
8	No. 14 Blast Furnace Relief Valve	No ☑	Yes ☐	0741
1	No. 4 Blast Furnace Top	No ☑	Yes ☐	1106
2	No. 4 Blast Furnace Relief Valve	No ☑	Yes ☐	1111
3	No. 6 Blast Furnace Top	No ☑	Yes ☐	1116
4	No. 6 Blast Furnace Relief Valve	No ☑	Yes ☐	1121
5	No. 8 Blast Furnace Top	No ☑	Yes ☐	1126
6	No. 8 Blast Furnace Relief Valve	No ☑	Yes ☐	1131
7	No. 14 Blast Furnace Top	No ☑	Yes ☐	1136
8	No. 14 Blast Furnace Relief Valve	No ☑	Yes ☐	1141
1	No. 4 Blast Furnace Top	No ☑	Yes ☐	1506
2	No. 4 Blast Furnace Relief Valve	No ☑	Yes ☐	1511
3	No. 6 Blast Furnace Top	No ☑	Yes ☐	1516
4	No. 6 Blast Furnace Relief Valve	No ☑	Yes ☐	1521
5	No. 8 Blast Furnace Top	No ☑	Yes ☐	1526
6	No. 8 Blast Furnace Relief Valve	No ☑	Yes ☐	1531
7	No. 14 Blast Furnace Top	No ☑	Yes ☐	1536
8	No. 14 Blast Furnace Relief Valve	No ☑	Yes ☐	1541

Planned Bleeder Event N/A

1	Blast Furnace No._____	No ☐	Yes ☐	
2	Blast Furnace No._____	No ☐	Yes ☐	
3	Blast Furnace No._____	No ☐	Yes ☐	

~9750458.doc

#4BF Unplanned Bleeder Event

OCS Environmental, Inc.
Method 9 VE Inspection Form

Page 1 of 2

			Start	End
Date:	11/20/09			
Source:	#4 Blast furn Bleeders	Emissions color:	As Noted	same
Observation Start Time:	0650	Background:	SKY	
Observation End Time:	0659	Sky Conditions:	Overcast	
Observer's Position:	4BF1	Wind Speed:	4	
Distance to source:	320 yds	Wind Direction:	S	
Direction to source:	NW 320°	Ambient Temp:	37°	
		Relative Humidity%:	99%	
Height of source:	235' 6"	Wet Bulb Temp:	N/A	
Vertical angle to source:	14°			

Plume Type: Attached Detached None

Comments	0	15	30	45			0	15	30	45	Comments
					0	30					
					1	31					
					2	32					
					3	33					
					4	34					
					5	35					
					6	36					
					7	37					
					8	38					
					9	39					
					10	40					
					11	41					
					12	42					
					13	43					
					14	44					
					15	45					
					16	46					
					17	47					
					18	48					
					19	49					
					20	50	0	0	0	0	Bleeders UN Planned
					21	51	0	0	0	0	
					22	52	0	0	0	0	
					23	53	0	0	0	0	
					24	54	0	0	0	0	
					25	55	0	0	0	0	
					26	56	0	0	0	0	
					27	57	0	0	0	0	
					28	58	0	0	0	0	
					29	59	0	0	0	0	

Additional info (include steam dissipation point)

Observer's Signature: R.L. Mady

20071107 Method 9 Inspection Form.doc

OCS Environmental, Inc.
Method 9 VE Inspection Form

			Start	End
Date:	11/24/09			
Source:	#4 Blast Furn Bleeder	Emissions color:	As noted	same
Observation Start Time:	0700	Background:	sky	
Observation End Time:	0705	Sky Conditions:	overcast	
Observer's Position:	48F1	Wind Speed:	4	
Distance to source:	320 yds	Wind Direction:	S	
Direction to source:	NW 320°	Ambient Temp:	37°	
		Relative Humidity%:	99%	
Height of source:	235' 6"	Wet Bulb Temp:	N/A	
Vertical angle to source:	14°			

Plume Type: Attached Detached None

Comments	0	15	30	45			0	15	30	45	Comments
	0	0	0	0	0	30					
	0	0	0	0	1	31					
	0	0	0	0	2	32					
	0	0	0	0	3	33					
	0	0	0	0	4	34					
					5	35					
					6	36					
					7	37					
					8	38					
					9	39					
					10	40					
					11	41					
					12	42					
					13	43					
					14	44					
					15	45					
					16	46					
					17	47					
					18	48					
					19	49					
					20	50					
					21	51					
					22	52					
					23	53					
					24	54					
					25	55					
					26	56					
					27	57					
					28	58					
					29	59					

Additional info (include steam dissipation point)

Observer's Signature

Rick Mag

OCS Environmental, Inc.
Method 9 Source Layout Sketch

Date: 11 / 24 / 09

Observer Name: R. MACKEY

Begin Time: 0650 Time End: 0705

No Sun Visible Times
0650

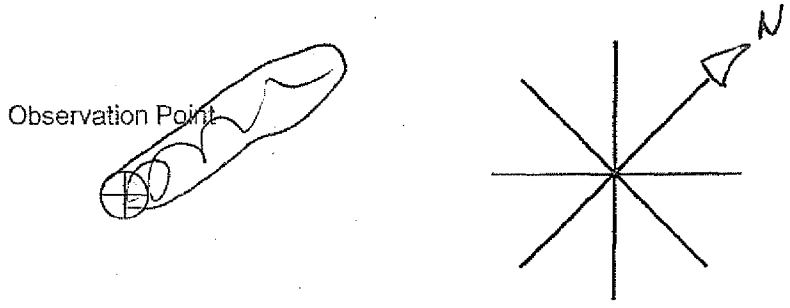

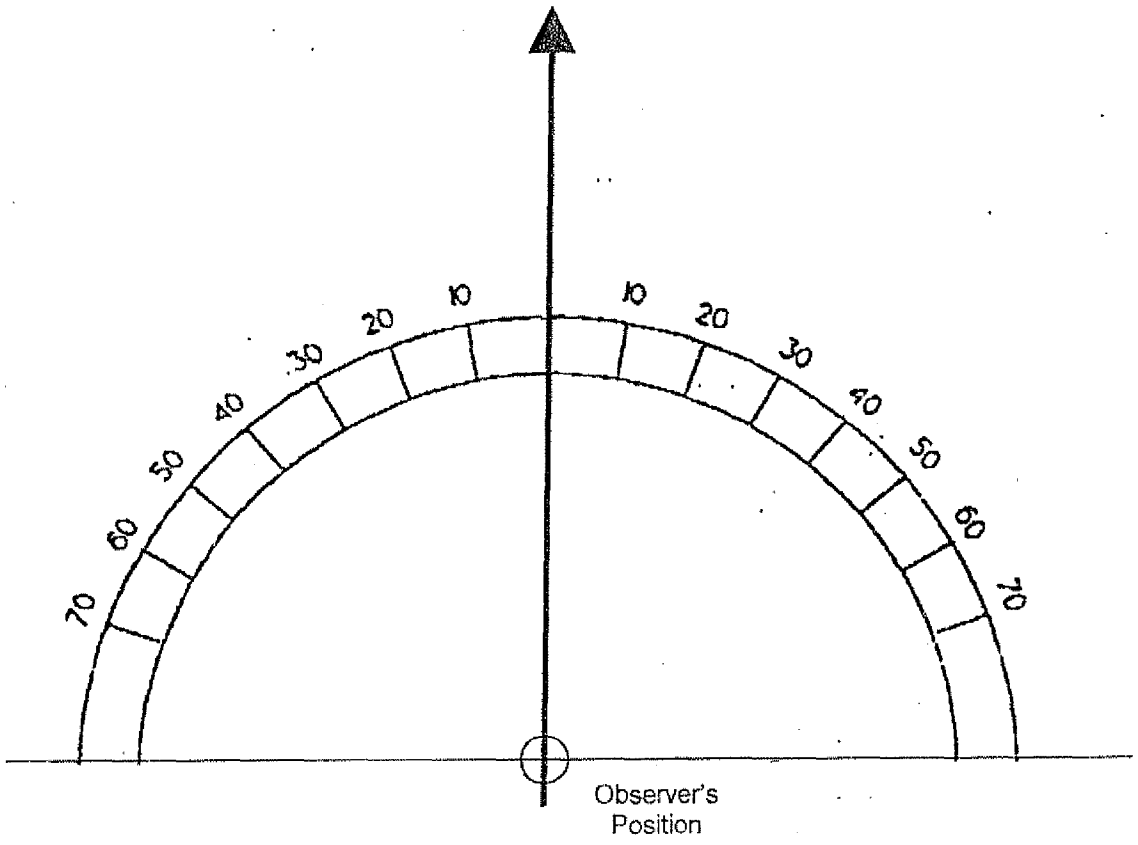

Signature: Rick J Mack

20071107 Method 9 Source Layout Sketch.doc

OCS Environmental, Inc.
Method 9 VE Inspection Form

Page 1 of 1

			Start	End
Date:	11/24/09			
Source:	#4 BF Top	Emissions color:	GREY	SAME
Observation Start Time:	1309	Background:	SKY	
Observation End Time:	1339	Sky Conditions:	overcast	
Observer's Position:	4 & F1	Wind Speed:	4	
Distance to source:	320 yds	Wind Direction:	S	
Direction to source:	NW 320°	Ambient Temp:	37°	
		Relative Humidity%:	99%	
Height of source:	162'	Wet Bulb Temp:	N/A	
Vertical angle to source:	10°			

Plume Type: Attached Detached None

Comments	0	15	30	45			0	15	30	45	Comments
					0	30	0	0	0	0	
					1	31	0	0	0	0	
					2	32	0	0	0	0	
					3	33	0	0	0	0	
					4	34	0	0	0	0	
					5	35	0	0	0	0	
					6	36	0	0	0	0	
					7	37	0	0	0	0	
					8	38	0	0	0	0	
GREY IN STEAM			25	20	9	39	0	0			
	5	5	0	0	10	40					
	0	0	5	5	11	41					
	0	0	0	20	12	42					
	15	5	0	20	13	43					
	5	5	0	0	14	44					
	0	0	0	0	15	45					
	0	0	0	0	16	46					
	0	0	0	0	17	47					
	0	0	0	0	18	48					
	0	0	0	0	19	49					
	0	0	0	0	20	50					
	0	0	0	0	21	51					
	0	0	0	0	22	52					
	0	0	0	0	23	53					
	0	0	0	0	24	54					
	0	0	0	0	25	55					
	0	0	0	0	26	56					
	0	0	0	0	27	57					
	0	0	0	0	28	58					
	0	0	0	0	29	59					

Additional info (include steam dissipation point)

Observer's Signature: Rick Manley

OCS Environmental, Inc.
Method 9 Source Layout Sketch

Date: 11, 24, 09

Observer Name: R. Mackey

Begin Time: 1309 Time End: 1339

No Sun Visible Times
1309

Observation Point

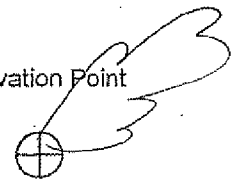

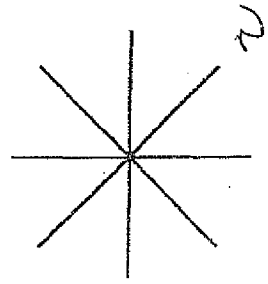

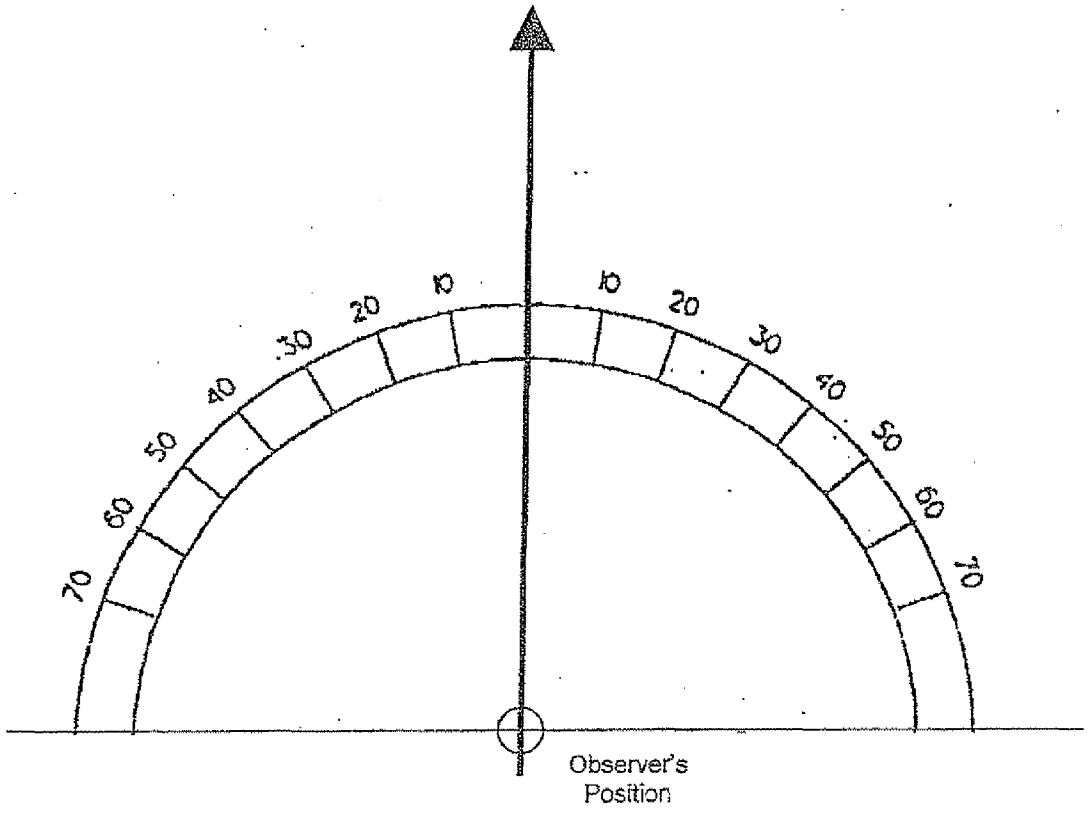

Signature: Rick Mackey

20071107 Method 9 Source Layout Sketch.doc

Iron and Steel Subsidiary Source Audit
USS Gary Works

Date: 11/25/09
Inspector: FRANK W GAWLACH

Start Time: 0650
End Time: 1622

	Monitor Point	Emissions?		Time
1	No. 4 Blast Furnace Top	No ☑	Yes ☐	0650
2	No. 4 Blast Furnace Relief Valve	No ☑	Yes ☐	0655
3	No. 6 Blast Furnace Top	No ☑	Yes ☐	0705
4	No. 6 Blast Furnace Relief Valve	No ☑	Yes ☐	0710
5	No. 8 Blast Furnace Top	No ☑	Yes ☐	0715
6	No. 8 Blast Furnace Relief Valve	No ☑	Yes ☐	0720
7	No. 14 Blast Furnace Top	No ☑	Yes ☐	0725
8	No. 14 Blast Furnace Relief Valve	No ☑	Yes ☐	0730
1	No. 4 Blast Furnace Top	No ☑	Yes ☐	1050
2	No. 4 Blast Furnace Relief Valve	No ☑	Yes ☐	1055
3	No. 6 Blast Furnace Top	No ☑	Yes ☐	1100
4	No. 6 Blast Furnace Relief Valve	No ☑	Yes ☐	1105
5	No. 8 Blast Furnace Top	No ☑	Yes ☐	1110
6	No. 8 Blast Furnace Relief Valve	No ☑	Yes ☐	1115
7	No. 14 Blast Furnace Top	No ☑	Yes ☐	1120
8	No. 14 Blast Furnace Relief Valve	No ☑	Yes ☐	1125
1	No. 4 Blast Furnace Top	No ☑	Yes ☐	1450
2	No. 4 Blast Furnace Relief Valve	No ☑	Yes ☐	1455
3	No. 6 Blast Furnace Top	No ☑	Yes ☐	1500
4	No. 6 Blast Furnace Relief Valve	No ☑	Yes ☐	1505
5	No. 8 Blast Furnace Top	No ☑	Yes ☐	1510
6	No. 8 Blast Furnace Relief Valve	No ☑	Yes ☐	1515
7	No. 14 Blast Furnace Top	No ☑	Yes ☐	1520
8	No. 14 Blast Furnace Relief Valve	No ☑	Yes ☐	1525

Planned Bleeder Event N/A

1	Blast Furnace No._____	No ☐	Yes ☐	
2	Blast Furnace No._____	No ☐	Yes ☐	
3	Blast Furnace No._____	No ☐	Yes ☐	

~9750458.doc

Iron and Steel Subsidiary Source Audit
USS Gary Works

Date: 11-28-09
Inspector: [illegible]

Start Time: 06:54
End Time: 16:21

	Monitor Point	Emissions?		Time
1	No. 4 Blast Furnace Top	No ☑	Yes ☐	07:00
2	No. 4 Blast Furnace Relief Valve	No ☑	Yes ☐	07:05
3	No. 6 Blast Furnace Top	No ☑	Yes ☐	07:10
4	No. 6 Blast Furnace Relief Valve	No ☑	Yes ☐	07:15
5	No. 8 Blast Furnace Top	No ☑	Yes ☐	07:20
6	No. 8 Blast Furnace Relief Valve	No ☑	Yes ☐	07:25
7	No. 14 Blast Furnace Top	No ☑	Yes ☐	07:30
8	No. 14 Blast Furnace Relief Valve	No ☑	Yes ☐	07:35
1	No. 4 Blast Furnace Top	No ☑	Yes ☐	11:00
2	No. 4 Blast Furnace Relief Valve	No ☑	Yes ☐	11:05
3	No. 6 Blast Furnace Top	No ☑	Yes ☐	11:10
4	No. 6 Blast Furnace Relief Valve	No ☑	Yes ☐	11:15
5	No. 8 Blast Furnace Top	No ☑	Yes ☐	11:20
6	No. 8 Blast Furnace Relief Valve	No ☑	Yes ☐	11:25
7	No. 14 Blast Furnace Top	No ☑	Yes ☐	11:30
8	No. 14 Blast Furnace Relief Valve	No ☑	Yes ☐	11:35
1	No. 4 Blast Furnace Top	No ☑	Yes ☐	15:00
2	No. 4 Blast Furnace Relief Valve	No ☑	Yes ☐	15:05
3	No. 6 Blast Furnace Top	No ☑	Yes ☐	15:10
4	No. 6 Blast Furnace Relief Valve	No ☑	Yes ☐	15:15
5	No. 8 Blast Furnace Top	No ☑	Yes ☐	15:20
6	No. 8 Blast Furnace Relief Valve	No ☑	Yes ☐	15:25
7	No. 14 Blast Furnace Top	No ☑	Yes ☐	15:30
8	No. 14 Blast Furnace Relief Valve	No ☑	Yes ☐	15:35

Planned Bleeder Event N/A

1	Blast Furnace No._____	No ☐	Yes ☐	
2	Blast Furnace No._____	No ☐	Yes ☐	
3	Blast Furnace No._____	No ☐	Yes ☐	

~9750458.doc