Particulate Emissions Test Report

U. S. Steel Gary Works
No. 14 Blast Furnace
Casthouse Baghouse Stack
March 19, 2009
Gary, Indiana

RECEIVED
AIR ENFORCEMENT BRANCH
U.S. EPA, REGION 5

Platt Environmental Services, Inc.

Platt Environmental Services, Inc.

1520 Kensington Road, Suite 204
Oak Brook, IL 60523-2139
630-521-9400
630-521-9494 fax

Particulate Emissions Test Report

U. S. Steel Gary Works
No. 14 Blast Furnace
Casthouse Baghouse Stack
March 19, 2009
Gary, Indiana

Report Submittal Date
April 15, 2009

Prepared By

Platt Environmental Services

Report No. M091105B

TABLE OF CONTENTS

1.0 INTRODUCTION 1

2.0 EXECUTIVE SUMMARY 2

3.0 TEST METHODOLOGY 3
- Method 1 Traverse Point Determination 3
- Method 2 Volumetric Flowrate Determination 3
- Method 3A Oxygen (O_2)/Carbon Dioxide (CO_2) Determination 3
- Method 5 Filterable Particulate Determination 4
- Method 9 Visible Emission Determination 4

4.0 TEST RESULT SUMMARIES 5

5.0 PROCESS DATA 6

6.0 CONCLUSION AND CERTIFICATION 6

APPENDIX
- Test Section Diagram 8
- Sample Train Diagrams 9
- Calculation Nomenclature and Formulas 13
- Laboratory Sample Analysis 21
- Reference Method Test Data (Computerized Sheets) 23
- Calibration Data 28
- Field Data Sheets 37
- Opacity Data (Performed by OCS Environmental, Inc.) 43

1.0 Introduction

PLATT ENVIRONMENTAL SERVICES (PES) conducted a particulate emissions test program for U.S. Steel Gary Works in Gary, Indiana on the No. 14 Blast Furnace Casthouse Baghouse Stack on March 19, 2009. This report summarizes the results of the test program and test methods used.

The test locations, test dates and test parameters are summarized below.

Test Overview

Test Location	Test Date	Test Parameters
No.14 Blast Furnace Casthouse Baghouse Stack	March 19, 2009	Filterable Particulate Matter

The identification of individuals associated with the test program is summarized below.

Location	Address	Contact
Test Facility	U.S. Steel Gary Works One North Broadway Gary, Indiana 46402	Jim Alexander Manager Environmental Air Compliance US Steel Gary Works (219) 888-3387
Testing Company Representative	Platt Environmental Services, Inc. 1080 Breuckman Drive Crown Point, Indiana 46307	Mr. Christopher Trezak (630) 521-9400 (phone) ctrezak@plattenv.com

The test crew consisted of Messrs. D. Runyan, A. Schavey, and C. Trezak. The purpose of the test program was to demonstrate compliance with applicable emissions limits listed in Table 1.

2.0 Executive Summary

Selected results of the test program are summarized below, in Table 1. A complete summary of emission test results follows the narrative portion of this report.

Table 1

Test Results

Test Location	Test Parameter	Emission Limit[1] grains/dscf	Emission Rate grains/dscf	Opacity Limit[1]	Opacity *
No.14 Blast Fumace Casthouse Baghouse Stack	Filterable Particulate Matter	0.01	0.003	20% (6 minute average)	0.0

[1] Emission Limit under 40 CFR 63, Subpart FFFFF, Table 1
*Opacity readings were performed by OCS Environmental, Inc. personnel

3.0 Test Methodology

Emissions testing was conducted following the methods specified in 40 CFR, Part 60, Appendix A. Schematics of the sampling trains used are included in the Appendix. Copies of field data sheets and/or analyzer print-outs for each test run are included in Appendix.

The following methodologies were used during the test program:

Method 1 Traverse Point Determination

Test measurement points were selected in accordance with Method 1. The characteristics of each measurement location are summarized below, in Table 2.

Table 2

Sample Point Selection

Locations	Upstream Diameters	Downstream Diameters	Test Parameter	Number of Sampling Points
No.14 Blast Furnace Casthouse Baghouse Stack	> 0.5	>2.0	Particulate	24

Method 2 Volumetric Flowrate Determination

Gas velocity was measured following Method 2, for purposes of calculating stack gas volumetric flow rate. An S-type pitot tube, differential pressure gauge, thermocouple and temperature readout were used to determine gas velocity at each sample point. All of the equipment used was calibrated in accordance with the specifications of the Method. Calibration data is presented in the Appendix.

Method 3A Oxygen (O_2)/Carbon Dioxide (CO_2) Determination

Stack gas molecular weight was determined in accordance with Method 3A. Servomex analyzers were used to determine stack gas oxygen and carbon dioxide content and, by difference, nitrogen content. All of the equipment used was calibrated in accordance with the specifications of the Method.

Method 5 Filterable Particulate Determination

Stack gas filterable particulate concentrations and emission rates were determined in accordance with Method 5. An Environmental Supply Company, Inc. sampling train was used to sample stack gas at an isokinetic rate, as specified in the Method. Particulate matter in the sample probe was recovered using an acetone wash. The probe wash and filter catch were analyzed by PES personnel in accordance with the method.

Method 9 Visible Emission Determination

Visible emissions were determined in accordance with Method 9. The observer stood at a distance providing a clear view of the emissions with the sun oriented in the 140° sector to their back. As much as possible, the line of vision was approximately perpendicular to the plume direction.

The line of sight was approximately perpendicular to the longer axis of the outlet.

Opacity observations were made at the point of greatest opacity in the portion of the plume where condensed water vapor was not present. Observations were made at 15-second intervals for the duration of the test run.

Visible emissions observations were conducted and recorded by Messrs. Danny Walsh and Jimmie Johnson of OCS Environmental, Inc. Each is a certified visual emissions observer, and copies of their certifications are presented in the Appendix.

4.0 Test Result Summaries

Company: US Steel Gary Works
Plant: No. 14 Blast Furnace
Test Location: Casthouse Baghouse Stack
Test Method: M5

Source Condition	**1 Fan Only**	**1 Fan Only**	**1 Fan Only**	
Date	**3/19/09**	**3/19/09**	**3/19/09**	
Start Time	**8:03**	**9:30**	**10:57**	
End Time	**9:17**	**10:44**	**12:11**	
	Run 1	**Run 2**	**Run 3**	**Average**
Stack Conditions				
Average Gas Temperature, °F	88.7	79.8	78.5	82.3
Flue Gas Moisture, percent by volume	0.8%	0.8%	0.9%	0.8%
Average Flue Pressure, in. Hg	29.88	29.88	29.88	29.88
Gas Sample Volume, dscf	74.985	70.498	70.187	71.890
Average Gas Velocity, ft/sec	42.612	43.587	43.225	43.141
Gas Volumetric Flow Rate, acfm	339,358	347,120	344,239	343,572
Gas Volumetric Flow Rate, dscfm	323,522	336,492	334,107	331,374
Average %CO_2 by volume, dry basis	0.1	0.1	0.1	0.1
Average %O_2 by volume, dry basis	20.9	20.9	20.9	20.9
Isokinetic Variance	101.4	101.7	101.9	101.7
Filterable PM (Method 5)				
grains/acf	0.0035	0.0023	0.0016	0.0025
grains/dscf	0.0036	0.0024	0.0017	0.0026
lb/hr	10.043	6.881	4.848	7.257

5.0 Process Data

Production data and fuel use data was recorded by plant personnel during each test run in order to correlate emission rates to production and fuel use. Production data and fuel use data is on file at the facility.

6.0 Conclusion and Certification

PLATT ENVIRONMENTAL SERVICES is pleased to have been of service to U.S. Steel Gary Works. If you have any questions regarding this test report, please to not hesitate to contact us at 630-521-9400.

CERTIFICATION

As project manager, I hereby certify that this test report represents a true and accurate summary of emissions test results and the methodologies employed to obtain those results, and the test program was performed in accordance with the methods specified in this test report.

PLATT ENVIRONMENTAL SERVICES

Christopher S. Trezak — Program Manager

Jeffrey M. Crivlare — Quality Assurance

APPENDIX

EQUAL AREA TRAVERSE FOR ROUND DUCTS

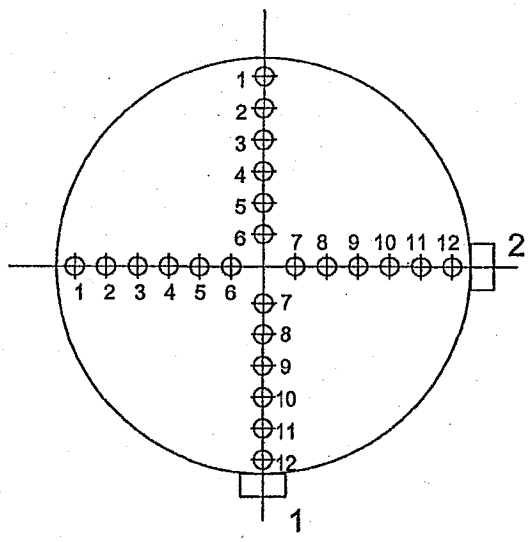

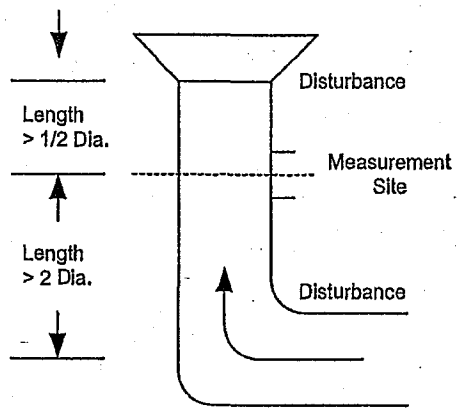

Job: US Steel Gary Works

No. 14 Blast Furnace

Gary, Indiana

Date: March 19, 2009

Test Location: Casthouse Baghouse Stack

Stack Diameter: 13.0 Feet

Stack Area: 132.732 Square Feet

No. of Points : 12

No. of Ports: 2

Port Length: 7 Inches

USEPA Method 2 - S-Type Pitot Tube Diagram

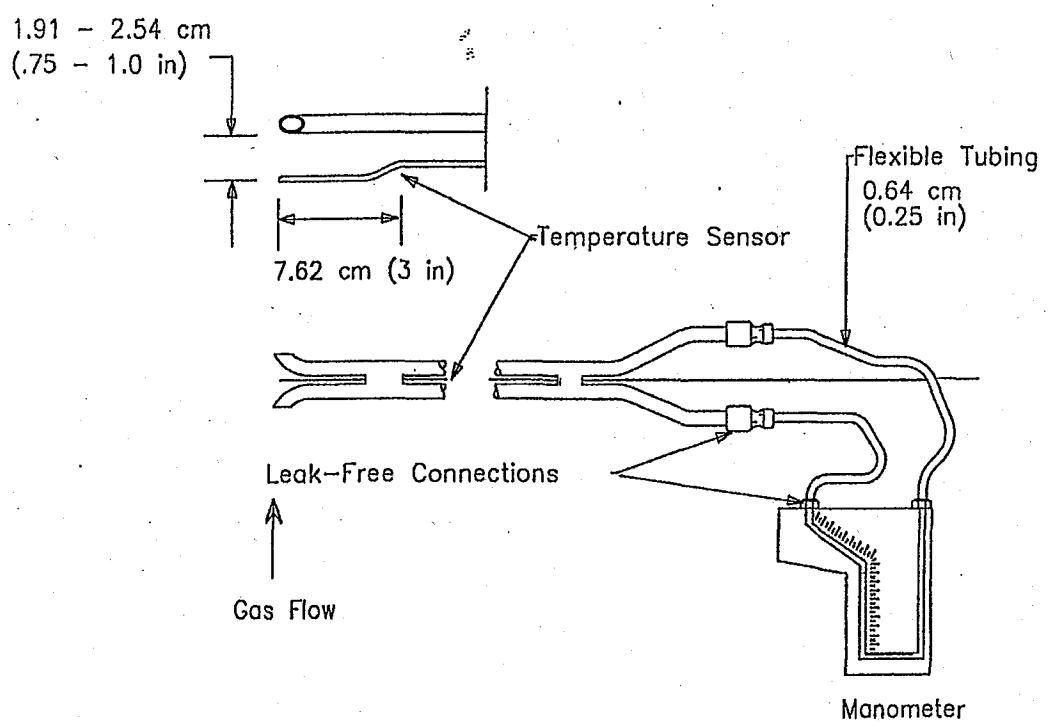

USEPA Method 3 - Integrated Oxygen/Carbon Dioxide Sample Train Diagram

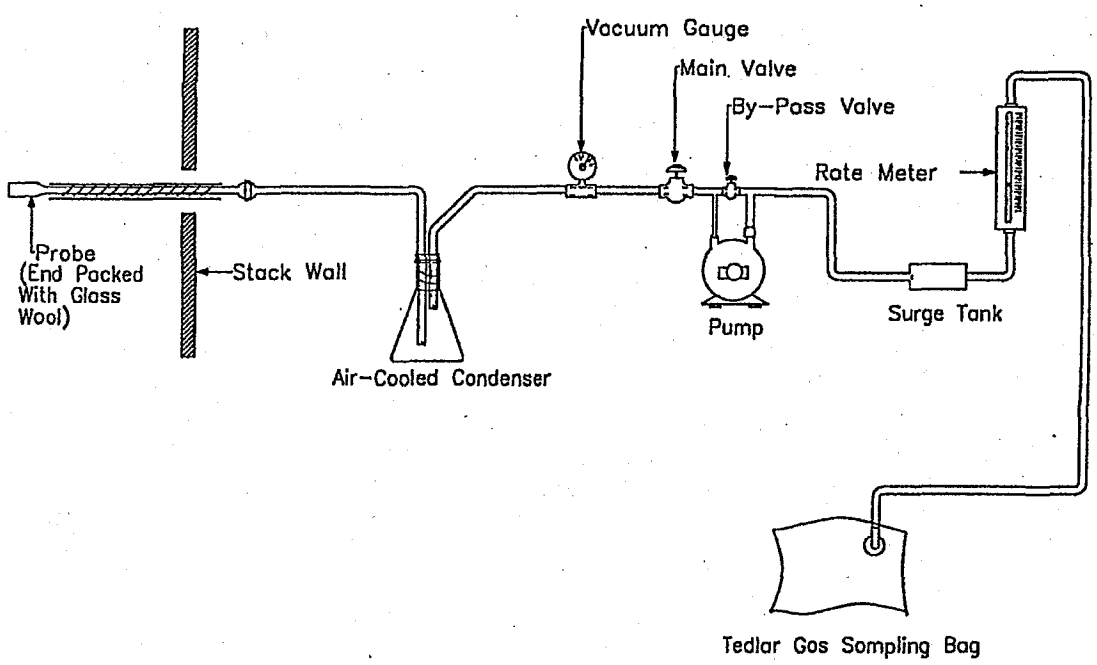

USEPA Method 3A - Oxygen and Carbon Dioxide Sample Train Diagram

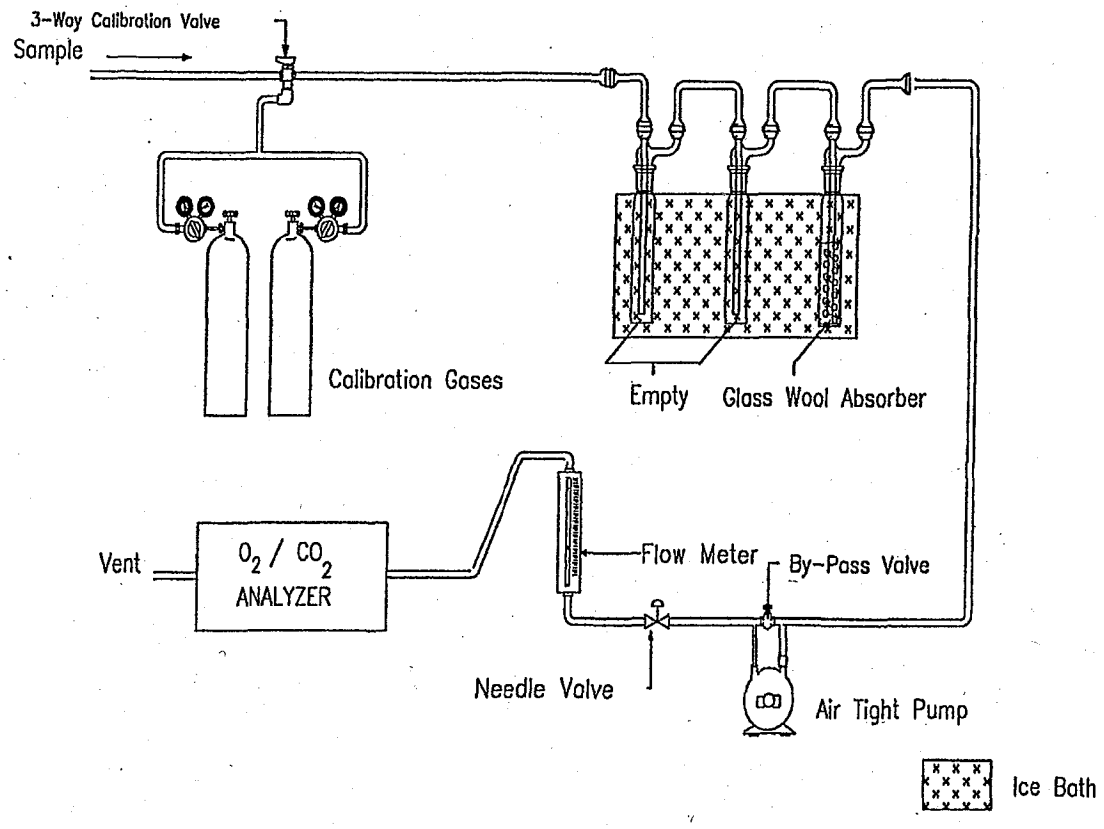

USEPA Method 5 - Particulate Matter Sample Train Diagram

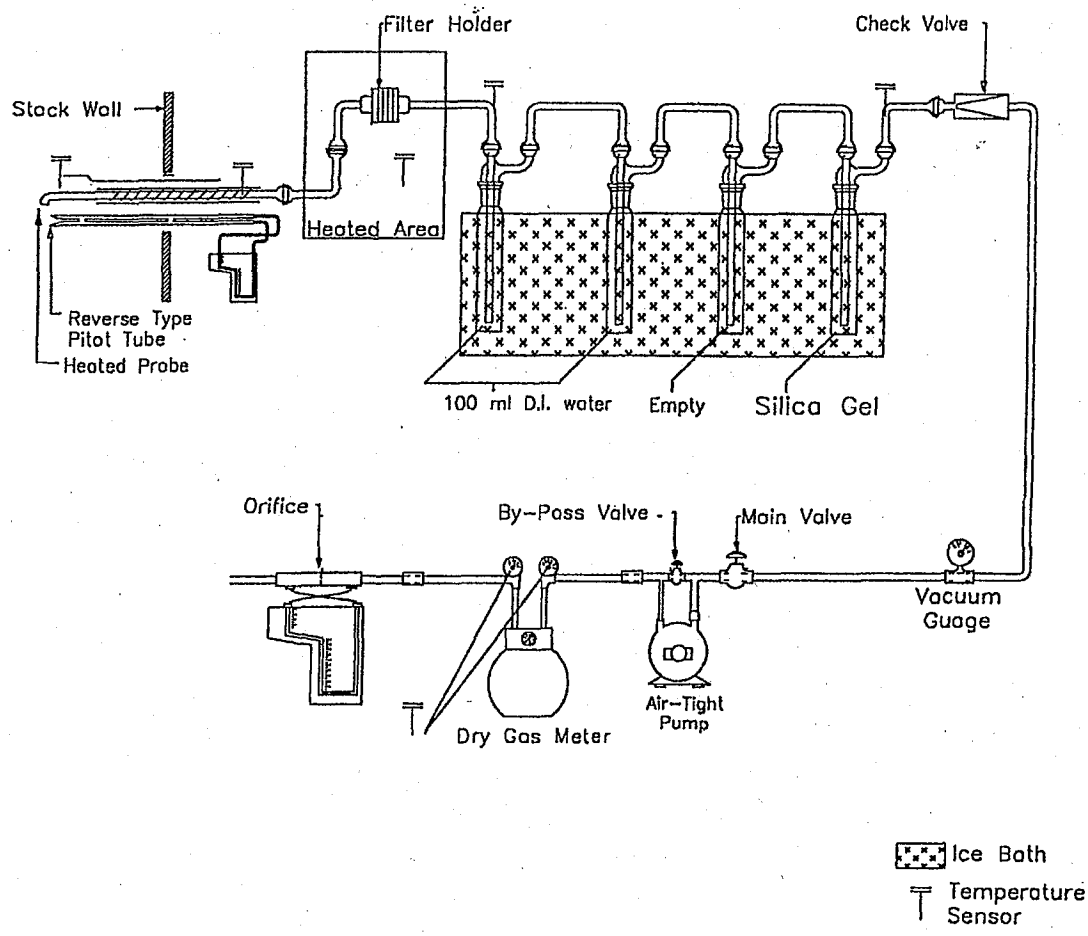

PLATT ENVIRONMENTAL SERVICES, INC.

Particulate Nomenclature

A = Cross-sectional area of stack or duct, square feet
A_n = Cross-sectional area of nozzle, square feet
B_{ws} = Water vapor in gas stream, by volume
C_a = Acetone blank residue concentration, g/g
C_{acf} = Concentration of particulate matter in gas stream at actual conditions, gr/acf
C_p = Pitot tube coefficient
C_s = Concentration of particulate matter in gas stream, dry basis, corrected to standard conditions, gr/dscf
IKV = Isokinetic sampling variance, must be 90.0 % ≤ IKV ≤ 110.0%
M_d = Dry molecular weight of gas, lb/lb-mole
M_s = Molecular weight of gas, wet basis, lb/lb-mole
M_w = Molecular weight of water, 18.0 lb/lb-mole
m_a = Mass of residue of acetone after evaporation, grams
P_{bar} = Barometric pressure at testing site, inches mercury
P_g = Static pressure of gas, inches mercury (inches water/13.6)
P_s = Absolute pressure of gas, inches mercury = $P_{bar} + P_g$
P_{std} = Standard absolute pressure, 29.92 inches mercury
Q_{acfm} = Actual volumetric gas flow rate, acfm
Q_{sd} = Dry volumetric gas flow rate corrected to standard conditions, dscfh
R = Ideal gas constant, 21.85 inches mercury cubic foot/°R-lb-mole
T_m = Dry gas meter temperature, °R
T_s = Gas temperature, °R
T_{std} = Absolute temperature, 528°R
V_a = Volume of acetone blank, ml
V_{aw} = Volume of acetone used in wash, ml
W_a = Weight of residue in acetone wash, grams
m_n = Total amount of particulate matter collected, grams
V_{1c} = Total volume of liquid collected in impingers and silica gel, ml
V_m = Volume of gas sample as measured by dry gas meter, dcf
$V_{m(std)}$ = Volume of gas sample measured by dry gas meter, corrected to standard conditions, dscf
v_s = Gas velocity, ft/sec
$V_{w(std)}$ = Volume of water vapor in gas sample, corrected to standard conditions, scf
Y = Dry gas meter calibration factor
ΔH = Average pressure differential across the orifice meter, inches water
Δp = Velocity head of gas, inches water
ρ_a = Density of acetone, 0.7855 g/ml (average)
ρ_w = Density of water, 0.002201 lb/ml
θ = Total sampling time, minutes
K_1 = 17.647 °R/in. Hg
K_2 = 0.04707 ft^3/ml
K_4 = 0.09450/100 = 0.000945
K_p = Pitot tube constant, $85.49 \frac{ft}{sec}\left[\frac{(lb/lb-mole)(in.Hg)}{(°R)(in.H_2O)}\right]^{1/2}$
%EA = Percent excess air
$\%CO_2$ = Percent carbon dioxide by volume, dry basis
$\%O_2$ = Percent oxygen by volume, dry basis
%CO = Percent carbon monoxide by volume, dry basis
$\%N_2$ = Percent nitrogen by volume, dry basis
0.264 = Ratio of O_2 to N_2 in air, v/v
28 = Molecular weight of N_2 or CO
32 = Molecular weight of O_2
44 = Molecular weight of CO_2
13.6 = Specific gravity of mercury (Hg)

PLATT ENVIRONMENTAL SERVICES, INC.

Particulates Calculation Formulas

1. $V_{w(std)} = V_{lc}\left(\frac{\rho_w}{M_w}\right)\left(\frac{RT_{std}}{P_{std}}\right) = K_2 V_{lc}$

2. $V_{m(std)} = V_m Y \left(\frac{T_{std}}{T_m}\right)\left(\frac{(P_{bar} + (\frac{\Delta H}{13.6}))}{P_{std}}\right) = K_1 V_m Y \frac{(P_{bar} + (\frac{\Delta H}{13.6}))}{T_m}$

3. $B_{ws} = \frac{V_{w(std)}}{(V_{m(std)} + V_{w(std)})}$

4. $M_d = 0.44(\%CO_2) + 0.32(\%O_2) + 0.28(\%N_2)$

5. $M_s = M_d(1 - B_{ws}) + 18.0(B_{ws})$

6. $C_a = \frac{m_a}{V_a \rho_a}$

7. $W_a = C_a V_{aw} \rho_a$

8. $C_{acf} = 15.43 K_i \left(\frac{m_n P_s}{V_{w(std)} + V_{m(std)}\ T_s}\right)$

9. $C_S = (15.43 \text{ grains/gram})\ (m_n / V_{m(std)})$

10. $v_s = K_p C_p \sqrt{\frac{\Delta P\ T_s}{P_s M_s}}$

11. $Q_{acfm} = v_s A(60_{sec/min})$

12. $Q_{sd} = (3600_{sec/hr})(1 - B_{ws})\ v_s \left(\frac{T_{std} P_s}{T_s P_{std}}\right) A$

13. E (emission rate, lbs/hr) $= Q_{std}(C_s / 7000 \text{ grains/lb})$

14. $IKV = \frac{T_s V_{m(std)} P_{std}}{T_{std} v_s \theta A_n P_s 60(1 - B_{ws})} = K_4 \frac{T_s V_{m(std)}}{P_s v_s A_n \theta (1 - B_{ws})}$

15. $\%EA = \left(\frac{\%O_2 - (0.5\%CO)}{0.264\%N_2 - (\%O_2 - 0.5\%CO)}\right) \times 100$

PLATT ENVIRONMENTAL SERVICES, INC.

Volumetric Flow Nomenclature

A = Cross-sectional area of stack or duct, ft^2

B_{ws} = Water vapor in gas stream, proportion by volume

C_p = Pitot tube coefficient, dimensionless

M_d = Dry molecular weight of gas, lb/lb-mole

M_s = Molecular weight of gas, wet basis, lb/lb-mole

M_w = Molecular weight of water, 18.0 lb/lb-mole

P_{bar} = Barometric pressure at testing site, in. Hg

P_g = Static pressure of gas, in. Hg (in. H_2O/13.6)

P_s = Absolute pressure of gas, in. Hg = $P_{bar} + P_g$

P_{std} = Standard absolute pressure, 29.92 in. Hg

Q_{acfm} = Actual volumetric gas flow rate, acfm

Q_{sd} = Dry volumetric gas flow rate corrected to standard conditions, dscf/hr

R = Ideal gas constant, 21.85 in. Hg-ft^3/°R-lb-mole

T_s = Absolute gas temperature, °R

T_{std} = Standard absolute temperature, 528°R

v_s = Gas velocity, ft/sec

$V_{w(std)}$ = Volume of water vapor in gas sample, corrected to standard conditions, scf

Y = Dry gas meter calibration factor

Δp = Velocity head of gas, in. H_2O

K_1 = 17.647 °R/in. Hg

%EA = Percent excess air

$\%CO_2$ = Percent carbon dioxide by volume, dry basis

$\%O_2$ = Percent oxygen by volume, dry basis

$\%N_2$ = Percent nitrogen by volume, dry basis

0.264 = Ratio of O_2 to N_2 in air, v/v

0.28 = Molecular weight of N_2 or CO, divided by 100

0.32 = Molecular weight of O_2 divided by 100

0.44 = Molecular weight of CO_2 divided by 100

13.6 = Specific gravity of mercury (Hg)

PLATT ENVIRONMENTAL SERVICES, INC.

Volumetric Air Flow Calculations

$$Vm\,(std) = 17.647 \times Vm \times \left[\frac{(P_{bar} + (\frac{DH}{13.6}))}{(460 + Tm)}\right] \times Y$$

$$Vw\,(std) = 0.0471 \times Vlc$$

$$Bws = \left[\frac{Vw\,(std)}{Vw\,(std) + Vm\,(std)}\right]$$

$$Md = (0.44 \times \%CO_2) + (0.32 \times \%O_2) + [0.28 \times (100 - \%CO_2 - \%O_2)]$$

$$Ms = Md \times (1 - Bws) + (18 \times Bws)$$

$$Vs = \sqrt{\frac{(Ts + 460)}{Ms \times Ps}} \times \sqrt{DP} \times Cp \times 85.49$$

$$Acfm = Vs \times Area\,(of\ stack\ or\ duct) \times 60$$

$$Scfm = Acfm \times 17.647 \times \left[\frac{Ps}{(460 + Ts)}\right]$$

$$Scfh = Scfm \times 60 \frac{min}{hr}$$

acfm = actual cubic feet per minute
scfm = standard cubic feet per minute
scfh = standard cubic feet per hour

Cp = pitot tube correction factor
Ps = absolute flue gas pressure
Ms = molecular weight of gas (lb/lb mole)
Md = dry molecular weight of gas (lb/lb mole)
Bws = water vapor in gas stream proportion by volume

PLATT ENVIRONMENTAL SERVICES, INC.

MOISTURE CALCULATIONS

$$V_{wc(std)} = \frac{(V_f - V_i)\,\rho_w\,R\,T_{std}}{P_{std}M_w} = 0.04707(V_f - V_i)$$

$$V_{wsg(std)} = \frac{(W_f - W_i)\,R\,T_{std}}{P_{std}\,M_w} = 0.04715\,(W_f - W_i)$$

$$V_{m(std)} = 17.64\;V_m\,Y\frac{P_{bar} + \frac{\Delta H}{13.6}}{T_m}$$

$$B_{ws} = \frac{V_{wc(std)} + V_{wsg(std)}}{V_{wc(std)} + V_{wsg(std)} + V_{m(std)}}$$

Where:

B_{ws} = Water vapor in gas stream, proportion by volume
M_w = Molecular weight of water, 18.015 lb/lb-mole
P_{bar} = Barometric pressure at the testing site, in. Hg
P_{std} = Standard absolute pressure, 29.92 in. Hg
R = Ideal gas constant, 0.048137 (in. Hg)(ft^3)/(g-mole)(°R) = [21.8348(in. Hg)(ft^3)/(lb-mole)(°R)]/453.592 g-mole/lb-mole
T_m = Absolute average dry gas meter temperature, °R
T_{std} = Standard absolute temperature, 528 °R
V_f = Final volume of condenser water, ml
V_i = Initial volume of condenser water, ml
V_m = Dry gas volume measured by dry gas meter, dcf
$V_{m(std)}$ = Dry gas volume measured by dry gas meter, corrected to standard conditions, scf
$V_{wc(std)}$ = Volume of condensed water vapor, corrected to standard conditions, scf
$V_{wsg(std)}$ = Volume of water vapor collected in silica gel, corrected to standard conditions, scf
W_f = Final weight of silica gel, g
W_i = Initial weight of silica gel, g
Y = Dry gas meter calibration factor
ΔH = Average pressure exerted on dry gas meter outlet by gas sample bag, in. H_2O
ρ_w = Density of water, 0.9982 g/ml
13.6 = Specific gravity of mercury (Hg)
17.64 = T_{std}/P_{std}
0.04707 = ft^3/ml 0.04715 = ft^3/g

Company: US Steel Gary Works
Plant: No. 14 Blast Furnace
Test Location: Casthouse Baghouse Stack
Run: 1
Date: 3/19/2009

Dry Molecular Weight

$$Md = 0.44 \times (\%CO_2) + 0.32 \times (\%O_2) + 0.28 \times \%N_2$$

$\%CO_2$ = 0.1 $\%O_2$ = 20.9 $\%N_2$ = 79.0

Md = 28.85

Wet Molecular Weight

$$Ms = Md \times (1-Bws) + (18.0 \times Bws)$$

Md = 28.85 Bws = 0.008

Ms = 28.77

Meter Volume at Standard Conditions

$$Vm(std) = 17.647 \times Y \times Vm \times \frac{(Pbar + DH/13.6)}{Tm}$$

Y = 0.994 Vm = 72.394 Pbar = 29.89
DH = 3.03 Tm = 510.0

Vm(std) = 74.985

Volume of Water Vapor Condensed

$$Vw(std) = 0.0471 \times (\text{net } H_2O \text{ gain})$$

Net H_2O = 12.5

Vw(std) = 0.589

Moisture Content

$$Bws = \frac{Vwc(std)}{Vwc(std) + Vm(std)}$$

Vw(std) = 0.589 Vm(std) = 74.985

Bws = 0.008

Company: US Steel Gary Works
Plant: No. 14 Blast Furnace
Test Location: Casthouse Baghouse Stack
Run: 1
Date: 3/19/2009

Average Duct Velocity

$$Vs = 85.49 \times Cp \times \text{Sqrt DP (avg)} \times (Ts\ (avg)/(Ps \times Ms))^{1/2}$$

Cp = 0.840 Ts (avg) = 548.7 Sqrt DP (avg): 0.743
Ps = 29.88 Ms = 28.77

Vs = 42.61

Volumetric Flow Rate (Actual Basis)

$$Q = Vs \times A \times 60$$

Vs = 42.61 A = 132.732

Q = 339358

Volumetric Flow Rate (Standard Basis)

$$Qstd = 17.647 \times Q \times \frac{Ps}{Ts\ (avg)}$$

Q = 339358 Ps = 29.88 Ts (avg) = 548.7

Qstd = 326062

Volumetric Flow Rate (Standard Dry Basis)

$$Qstd(dry) = Qstd \times (1-Bws)$$

Qstd = 326062 Bws = 0.008

Qstd(dry) = 323522

Isokinetic Variation:

$$\%ISO = \frac{0.0945 \times Ts \times Vm(std)}{Vs \times \theta \times An \times Ps \times (1-Bws)}$$

Ts = 548.7 Vm(std) = 74.985 Vs = 42.612
An = 0.0003801 θ = 72.0 Ps = 29.88
Bws = 0.008

%ISO = 101.4

Company: US Steel Gary Works
Plant: No. 14 Blast Furnace
Test Location: Casthouse Baghouse Stack
Run: 1
Date: 3/19/2009

PM Concentration:
This example represents the filterable fraction. For other fractions, use the obtained m_n for that particulate fraction.

$$Co = \frac{m_n \times 15.43}{Vm(std)}$$

m_n (g) = 0.0176 Vm(std) = 74.985

Co = 0.0036 gr/dscf

PM Emission Rate:

$$ER\ lb/hr = \frac{Co}{7000} \times Qstd(dry) \times 60$$

$$ER\ lb/mmBtu = \frac{Co}{7000} \times Fd\ (dscf/mmBtu) \times \frac{20.9}{20.9 - O2\%}$$

Co = 0.0036 Qstd(dry) = 323522

ER lb/hr = 10.043 lb/hr

Platt Environmental Services, Inc

Chain-of-Custody Form

Project Number: M09 1105	Date Results Required: NORMAL
Client: US STEEL	TAT Required: NORMAL
Plant/Test Location: GARY WORKS	Project Supervisor: CHRIS TREZAK

Sample Number	Sample Date	Sample Point Identification	# of Conts	Sub Lab	Analysis Required	Volume, mls
021	3-17	#3 DISCHARGE STACK TEST #1	2		M-5	
022	3-17	TEST #2	2		M-5	
023	3-17	TEST #3	2		M5	
024	3-19	BF #14 CASTHOUSE BAGHOUSE STACK TEST #1	2		M5	
025	3-19	TEST #2	2		M5	
026	3-19	TEST #3	2		M5	
027	3-20	#1 DISCHARGE STACK TEST #1	2		M5	
028	3-20	TEST #2	2		M5	
029	3-20	TEST #3	2		M5	
030	3-20	ACETONE BLANK	1		M5	
031						
032						
033						
034						
035						
036						
037						
038						
039						
040						

Delivered to Lab by:	Date/Time:	Received by:	Date/Time:	Processed by:	Date/Time:
	3-28 11:00	Gene Maccione	3/24 9:00	Gene Maccione	3/26/09 10:00AM

Laboratory Notes:

Company: US Steel Gary Works
Plant: No. 14 Blast Furnace
Test Location: Casthouse Baghouse Stack
Analysis Date: 3/26/2009 **Analyst:** JM

Description	ID#	vol.	Initial Weight	Final Weight	Net Weight Gain
Test No. 1					
Filter Pan					
Filter	2193		0.3441	0.3463	0.0022
Acetone Wash	3002	89 mls	5.2283	5.2437	0.0154
Acetone Blank					0.0000
Total Acetone Fraction					0.0154
Total Front Half Weight					**0.0176**
Test No. 2					
Filter Pan					
Filter	2194		0.3453	0.3479	0.0026
Acetone Wash	3003	92 mls	5.2353	5.2436	0.0083
Acetone Blank					0.0000
Total Acetone Fraction					0.0083
Total Front Half Weight					**0.0109**
Test No. 3					
Filter Pan					
Filter	2191		0.3457	0.3487	0.0030
Acetone Wash	3004	74 mls	5.2202	5.2249	0.0047
Acetone Blank					0.0000
Total Acetone Fraction					0.0047
Total Front Half Weight					**0.0077**
Blank Summary					
Acetone Wash	3241	100 mls	2.5685	2.5685	0.0000

Company:	US Steel Gary Works	
Plant:	No. 14 Blast Furnace	
Test Location:	Casthouse Baghouse Stack	
Test Method:	M5	
Test Engineer:	DCR	
Test Technician:	CST/ASHV	
lb/mmBtu Emissions by:		
Type of Fuel Firing:		
Heat Input, mmBtu/hr:	Enter Here or For Each Run	
Temp ID:	CM16	
Meter ID:	CM16	
Pitot ID:	008A	
Pitot Tube Coefficient:	0.840	
Probe Length:	13.0	**ft**
Probe Liner Material:	Stainless-Steel	
Nozzle Diameter:	0.264	**in.**
Nozzle Kit ID Number:	6	
Meter Calibration Factor (Y):	0.994	
Meter Orifice Setting (Delta H):	1.616	
Sample Plane:	Horizontal	
Port Length:	7.00	**in.**
Port Size (diameter):	3.00	**in.**
Port Type:	Flange	
Duct Shape:	Circular	
Diameter	13	**ft**
Duct Area:	132.732	**Sq. Ft.**
Number of Ports Sampled:	2	
Number of Points per Port:	12	
Minutes per Point:	3.0	
Total Number of Traverse Points:	24	
Test Length:	72	**min.**
Train Type:	Hot Box	
Source Condition:	1 Fan Only	
# of Runs	3	

Company: US Steel Gary Works
Plant: No. 14 Blast Furnace
Location: Casthouse Baghouse Stack
Test Method: M5

	RUN 1	
	Filterable	Condensable
Sample ID:		
Item:	Filter	
PM, grams (net) collected:	0.0176	

	RUN 2		
	Filterable	Condensable	Total
Sample ID:			
Item:	Filter		
PM, grams (net) collected:	0.0109		

	RUN 3		
	Filterable	Condensable	Total
Sample ID:			
Item:	Filter		
PM, grams (net) collected:	0.0077		

Run 1-Method M5

Company: US Steel Gary Works
Plant: No. 14 Blast Furnace
Test Location: Casthouse Baghouse Stack
Source Condition: 1 Fan Only

Date: 3/19/09
Start Time: 8:03
End Time: 9:17

DRY GAS METER CONDITIONS			STACK CONDITIONS		
ΔH:	3.03	in. H_2O	Static Pressure	-0.20	in. H_2O
Meter Temperature, Tm:	50.0	°F	Flue Pressure (Ps):	29.88	in. Hg. abs.
Sqrt ΔP:	0.743	in. H_2O	Carbon Dioxide:	0.10	%
Stack Temperature, Ts:	88.7	°F	Oxygen:	20.90	%
Meter Volume, Vm:	72.394	ft^3	Nitrogen:	79.00	%
Meter Volume, Vmstd:	74.985	dscf	Gas Weight dry, Md:	28.852	lb/lb mole
Meter Volume, Vwstd:	0.589	wscf	Gas Weight wet, Ms:	28.767	lb/lb mole
Isokinetic Variance:	101.4	%I	Excess Air:	---	%
			Gas Velocity, Vs:	42.612	fps
Test Length	72.00	in mins.	Volumetric Flow:	339,358	acfm
Nozzle Diameter	0.278	in inches	Volumetric Flow:	323,522	dscfm
Barometric Pressure	29.89	in Hg	Volumetric Flow:	326,062	scfm

MOISTURE DETERMINATION

Initial Impinger Content:	200.0	ml	Silica Initial Wt.	212.2
Final Impinger Content:	201.0	ml	Silica Final Wt.	223.7
Difference:	1.0		Difference:	11.5

Total Water Gain: 12.5 Moisture, Bws: 0.008 Supersaturation Value, Bws: 0.046

Port-Point No.	Clock Time	Velocity Head Δp in. H2O	Orifice ΔH in. H2O	Actual Meter Vol. ft^3	Sqrt. Δp	Stack Temp °F	Meter Temp Inlet °F	Meter Temp Outlet °F	Collected Vol. ft^3	Point Vel ft/sec
1-1	8:03:00	0.45	2.40	55.350	0.671	101	50	48	2.690	38.491
-2	8:06:00	0.52	2.70	58.040	0.721	101	50	49	2.944	41.377
-3	8:09:00	0.48	2.60	60.984	0.693	98	51	49	2.766	39.754
-4	8:12:00	0.46	2.50	63.750	0.678	96	52	49	2.800	38.917
-5	8:15:00	0.47	2.50	66.550	0.686	94	53	49	2.780	39.338
-6	8:18:00	0.42	2.20	69.330	0.648	93	53	49	2.650	37.186
-7	8:21:00	0.44	2.40	71.980	0.663	93	53	49	2.710	38.061
-8	8:24:00	0.51	2.80	74.690	0.714	90	53	49	2.920	40.977
-9	8:27:00	0.79	4.30	77.610	0.889	89	53	49	3.630	51.000
-10	8:30:00	0.81	4.40	81.240	0.900	89	53	49	3.683	51.642
-11	8:33:00	0.75	4.05	84.923	0.866	88	53	49	3.537	49.692
-12	8:36:00	0.68	3.70	88.460	0.825	88	53	49	3.220	47.317
	8:39:00			91.680						
2-1	8:41:00	0.38	2.10	91.680	0.616	87	51	48	2.330	35.371
-2	8:44:00	0.42	2.30	94.010	0.648	87	51	48	2.670	37.186
-3	8:47:00	0.39	2.10	96.680	0.624	86	51	48	2.550	35.834
-4	8:50:00	0.45	2.40	99.230	0.671	85	51	48	2.740	38.491
-5	8:53:00	0.42	2.30	101.970	0.648	85	51	48	2.650	37.186
-6	8:56:00	0.48	2.60	104.620	0.693	84	51	48	2.830	39.754
-7	8:59:00	0.54	2.90	107.450	0.735	84	51	48	3.010	42.165
-8	9:02:00	0.65	3.50	110.460	0.806	83	51	48	3.280	46.261
-9	9:05:00	0.72	3.90	113.740	0.849	83	51	47	3.460	48.688
-10	9:08:00	0.78	4.20	117.200	0.883	82	51	47	3.620	50.676
-11	9:11:00	0.77	4.20	120.820	0.877	82	51	47	3.590	50.351
-12	9:14:00	0.67	3.60	124.410	0.819	81	51	47	3.334	46.967
	9:17:00			127.744						
Total				72.394			51.6	48.3	72.394	
Average			3.03		0.743	88.7	50.0			

Platt Environmental Services, Inc. Template Rev. 2/26/09

Run 2-Method M5

Company: US Steel Gary Works
Plant: No. 14 Blast Furnace
Location: Casthouse Baghouse Stack
Source Condition: 1 Fan Only

Date: 3/19/09
Start Time: 9:30
End Time: 10:44

DRY GAS METER CONDITIONS			STACK CONDITIONS		
ΔH:	2.69	in. H_2O	Static Pressure	-0.20	in. H_2O
Meter Temperature, Tm:	52.4	°F	Flue Pressure (Ps):	29.88	in. Hg. abs.
Sqrt ΔP:	0.766	in. H_2O	Carbon Dioxide:	0.10	%
Stack Temperature, Ts:	79.8	°F	Oxygen:	20.90	%
Meter Volume, Vm:	68.438	cf	Nitrogen:	79.0	%
Meter Volume, Vmstd:	70.498	dscf	Gas Weight dry, Md:	28.852	lb/lb mole
Meter Volume, Vwstd:	0.537	wscf	Gas Weight wet, Ms:	28.770	lb/lb mole
Isokinetic Variance:	101.7	%I	Excess Air:	---	%
			Gas Velocity, Vs:	43.587	fps
Test Length	72.00	in mins.	Volumetric Flow:	347,120	acfm
Nozzle Diameter	0.264	in inches	Volumetric Flow:	336,492	dscfm
Barometric Pressure	29.89	in Hg	Volumetric Flow:	339,055	scfm

MOISTURE DETERMINATION

Initial Impinger Content:	200.0	ml	Silica Initial Wt.	209.5
Final Impinger Content:	200.0	ml	Silica Final Wt.	220.9
Difference:	0.0		Difference:	11.4

Total Water Gain: 11.4 Moisture, Bws: 0.008 Supersaturation Value, Bws: 0.034

Port-Point No.	Clock Time	Velocity Head Δp in. H2O	Orifice ΔH in. H2O	Actual Meter Vol. ft^3	Sqrt. Δp	Stack Temp °F	Meter Temp Inlet °F	Meter Temp Outlet °F	Collected Vol. ft^3	Point Vel ft/sec
1-1	9:30:00	0.40	2.00	27.902	0.632	80	53	44	2.328	35.991
-2	9:33:00	0.45	2.00	30.230	0.671	80	53	44	2.470	38.174
-3	9:36:00	0.48	2.10	32.700	0.693	80	54	44	2.550	39.426
-4	9:39:00	0.53	2.40	35.250	0.728	80	55	44	2.680	41.429
-5	9:42:00	0.49	2.20	37.930	0.700	79	58	44	2.580	39.835
-6	9:45:00	0.48	2.10	40.510	0.693	79	58	45	2.550	39.426
-7	9:48:00	0.53	2.40	43.060	0.728	79	58	45	2.680	41.429
-8	9:51:00	0.64	2.90	45.720	0.800	79	59	45	2.900	45.526
-9	9:54:00	0.73	3.30	48.620	0.854	79	60	46	3.270	48.621
-10	9:57:00	0.82	3.70	51.890	0.906	79	60	46	3.400	51.531
-11	10:00:00	0.85	3.80	55.290	0.922	79	60	46	3.470	52.466
-12	10:03:00	0.80	3.60	58.760	0.894	79	60	46	3.360	50.899
	10:06:00			62.120						
2-1	10:08:00	0.45	2.00	62.120	0.671	81	59	47	2.529	38.174
-2	10:11:00	0.46	2.20	64.649	0.693	81	59	47	2.591	39.426
-3	10:14:00	0.53	2.40	67.240	0.728	80	59	48	2.740	41.429
-4	10:17:00	0.49	2.20	69.980	0.700	80	59	48	2.630	39.835
-5	10:20:00	0.43	1.90	72.610	0.658	80	59	48	2.280	37.316
-6	10:23:00	0.37	1.70	74.890	0.608	80	59	48	2.290	34.615
-7	10:26:00	0.55	2.50	77.180	0.742	80	59	49	2.780	42.203
-8	10:29:00	0.64	2.90	79.960	0.800	80	59	49	3.010	45.526
-9	10:32:00	0.75	3.40	82.970	0.866	80	59	49	3.250	49.283
-10	10:35:00	0.83	3.70	86.220	0.911	80	59	49	3.420	51.845
-11	10:38:00	0.88	4.00	89.640	0.938	80	59	49	3.530	53.383
-12	10:41:00	0.72	3.20	93.170	0.849	80	59	49	3.170	48.287
	10:44:00			96.340						
Total				68.438			58.1	46.6	68.438	
Average			2.69		0.766	79.8	52.4			

Platt Environmental Services, Inc. Template Rev. 2/26/09

Run 3-Method M5

Company: US Steel Gary Works
Plant: No. 14 Blast Furnace
Location: Casthouse Baghouse Stack
Source Condition: 1 Fan Only

Date: 3/19/09
Start Time: 10:57
End Time: 12:11

DRY GAS METER CONDITIONS			STACK CONDITIONS		
ΔH:	2.76	in. H_2O	Static Pressure	-0.20	in. H_2O
Meter Temperature, Tm:	49.6	°F	Flue Pressure (Ps):	29.88	in. Hg. abs.
Sqrt ΔP:	0.760	in. H_2O	Carbon Dioxide:	0.10	%
Stack Temperature, Ts:	78.5	°F	Oxygen:	20.90	%
Meter Volume, Vm:	67.761	cf	Nitrogen:	79	%
Meter Volume, Vmstd:	70.187	dscf	Gas Weight dry, Md:	28.852	lb/lb mole
Meter Volume, Vwstd:	0.612	wscf	Gas Weight wet, Ms:	28.758	lb/lb mole
Isokinetic Variance:	101.9	%I	Excess Air:	---	%
			Gas Velocity, Vs:	43.225	fps
Test Length	72.00	in mins.	Volumetric Flow:	344,239	acfm
Nozzle Diameter	0.264	in inches	Volumetric Flow:	334,107	dscfm
Barometric Pressure	29.89	in Hg	Volumetric Flow:	337,022	scfm

MOISTURE DETERMINATION

Initial Impinger Content:	200.0	ml	Silica Initial Wt.	211.3
Final Impinger Content:	200.0	ml	Silica Final Wt.	224.3
Difference:	0.0		Difference:	13.0

Total Water Gain: 13.0 Moisture, Bws: 0.009 Supersaturation Value, Bws: 0.033

Port-Point No.	Clock Time	Velocity Head Δp in. H2O	Orifice ΔH in. H2O	Actual Meter Vol. ft^3	Sqrt. Δp	Stack Temp °F	Meter Temp Inlet °F	Meter Temp Outlet °F	Collected Vol. ft^3	Point Vel ft/sec
1-1	10:57:00	0.45	2.00	96.763	0.671	79	52	47	2.497	38.138
-2	11:00:00	0.48	2.20	99.260	0.693	79	52	47	2.590	39.389
-3	11:03:00	0.51	2.30	101.850	0.714	79	53	47	2.670	40.601
-4	11:06:00	0.54	2.50	104.520	0.735	79	53	47	2.740	41.778
-5	11:09:00	0.46	2.10	107.260	0.678	79	53	47	2.530	38.559
-6	11:12:00	0.48	2.20	109.790	0.693	79	54	48	2.590	39.389
-7	11:15:00	0.52	2.40	112.380	0.721	79	53	47	2.650	40.997
-8	11:18:00	0.63	2.90	115.030	0.794	79	52	47	3.010	45.125
-9	11:21:00	0.74	3.30	118.040	0.860	79	52	47	3.210	48.907
-10	11:24:00	0.88	3.90	121.250	0.927	79	52	47	3.470	52.723
-11	11:27:00	0.89	4.00	124.720	0.943	79	52	47	3.520	53.635
-12	11:30:00	0.82	3.70	128.240	0.908	79	52	47	3.358	51.482
	11:33:00			131.598						
2-1	11:35:00	0.44	2.00	131.598	0.663	78	52	47	2.502	37.712
-2	11:38:00	0.49	2.20	134.100	0.700	78	52	47	2.620	39.797
-3	11:41:00	0.54	2.40	136.720	0.735	78	52	47	2.740	41.778
-4	11:44:00	0.47	2.10	139.480	0.688	78	52	47	2.540	38.976
-5	11:47:00	0.43	1.90	142.000	0.656	78	52	47	2.470	37.281
-6	11:50:00	0.49	2.20	144.470	0.700	78	52	47	2.580	39.797
-7	11:53:00	0.54	2.50	147.050	0.735	78	52	47	2.780	41.778
-8	11:56:00	0.56	2.90	149.830	0.748	78	52	47	2.800	42.545
-9	11:59:00	0.62	3.30	152.630	0.787	78	52	47	2.940	44.766
-10	12:02:00	0.72	3.80	155.570	0.849	78	52	47	3.170	48.241
-11	12:05:00	0.75	4.00	158.740	0.868	78	52	47	3.230	49.236
-12	12:08:00	0.62	3.50	161.970	0.787	78	52	46	2.554	44.766
	12:11:00			164.524						
Total				67.761			52.3	47.0	67.761	
Average			2.76		0.760	78.5	49.6			

Platt Environmental Services, Inc. Template Rev. 2/26/09

PLATT ENVIRONMENTAL SERVICES, INC.

Procedures for Calibration

Dry Gas Meters

The test meters are calibrated according to Method 5, Section 5.3 and "Procedures for Calibrating and Using Dry Gas Volume Meters as Calibration Standards" by P.R. Westlin and R.T. Shigehara, March 10, 1978.

Analytical Balance

The accuracy of the analytical balance is checked with Class S, Stainless Steel Type 303 weights manufactured by F. Hopken and Son, Jersey City, New Jersey.

Temperature Sensing Devices

The potentiometer and thermocouples are calibrated utilizing a NBS traceable millivolt source.

Nozzles

The nozzles are measured according to Method 5, Section 5.1.

Pitot Tubes

The pitot tubes used during this test program are fabricated according to the specification described and illustrated in the Code of Federal Regulations, Title 40, Part 60, Appendix A, Methods 1 through 5 as published in the Federal Register, Volume 42, No. 160; hereafter referred to by the appropriate method number. The pitot tubes comply with the alignment specifications in Method 2, Section 4; and the pitot tube assemblies are in compliance with specifications in the same section.

S TYPE PITOT TUBE INSPECTION FORM

Pitot Tube No 8 Date: 1/9/2009 Inspectors Name: AC

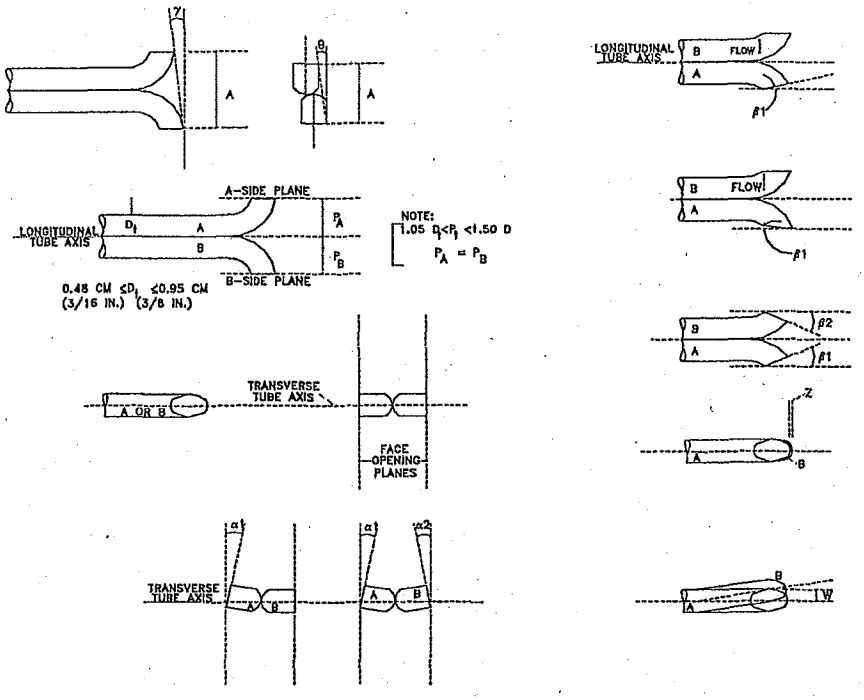

Pitot tube assembly level? x yes ____ no

Pitot tube openings damaged? ____ yes (explain below) x no

a_1 = 1 ° (<10°), a_2 = 1 ° (<10°) z = A sin g = 0.017 (in.); (<0.125 in.)

b_1 = 1 ° (<5°), b_2 = 0 ° (<5°) w = A sin q = 0.000 (in.); (<0.03125 in.)

γ = 1 °, θ = 0 °, A = 0.956 (in.) P_A = 0.478 (in.), P_B = 0.478 (in.), D_t = 0.375 (in.)

Calibration required? ____ yes x no

S TYPE PITOT TUBE INSPECTION FORM

Pitot Tube No. 8 Date: 4/3/2009 Inspectors Name: SD

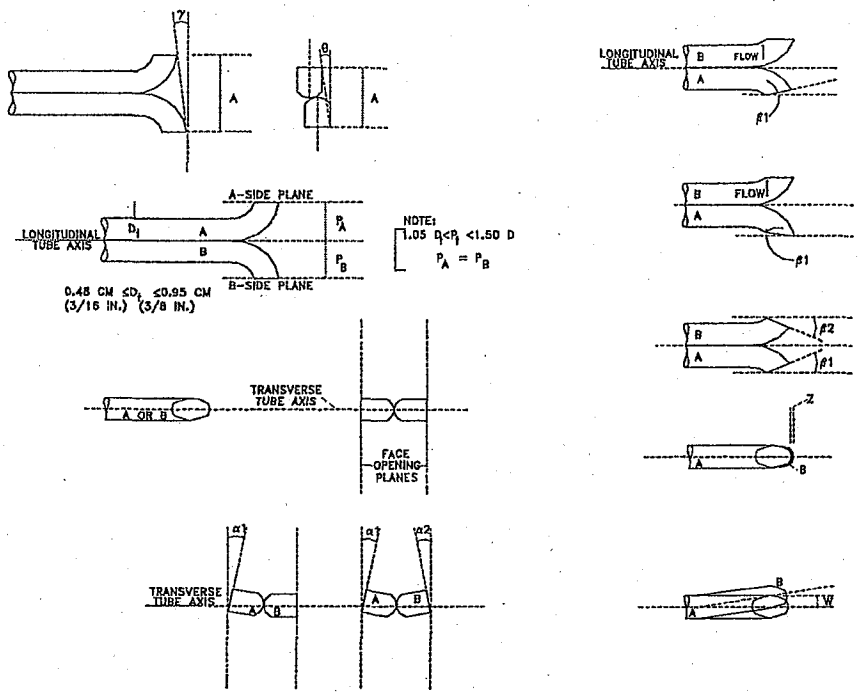

Pitot tube assembly level? x yes ____ no

Pitot tube openings damaged? ____ yes (explain below) x no

a_1 = 2 ° (<10°), a_2 = 2 ° (<10°) z = A sin g = 0.000 (in.); (<0.125 in.)

b_1 = 1 ° (<5°), b_2 = 1 ° (<5°) w = A sin q = 0.008 (in.); (<0.03125 in.)

γ = 0 °, θ = 0.5 °, A = 0.949 (in.) P_A = 0.474 (in.), P_B = 0.475 (in.), D_t = 0.375 (in.)

Calibration required? ____ yes x no

Meter Box Calibration

Dry Gas Meter No.	CM16	Date:	February 13, 2009
Standard Meter No.	14159239	Calibrated By:	DCR
Standard Meter (Y)	0.9973	Barometric Pressure:	29.75

Run Number		Orifice Setting in H_2O Chg (H)	Standard Meter Gas Volume vr	Dry Gas Meter Gas Volume vd	Standard Meter Temp. F° tr	Dry Gas Meter Inlet Temp. F° tdi	Dry Gas Meter Outlet Temp. F° tdo	Dry Gas Meter Avg. Temp. F° td	Time Min	Time Sec	Y	Chg (H)
Final			66.132	7.063	57	66	63					
Initial			61.130	1.978	57	67	65					
Difference	1	0.20	5.002	5.085	57	67	64	65	19	0	0.999	1.564
Final			55.628	96.379	57	65	61					
Initial			49.483	90.142	57	64	59					
Difference	2	0.50	6.145	6.237	57	65	60	62	15	0	0.994	1.624
Final			49.483	90.142	57	64	59					
Initial			41.760	82.327	57	59	57					
Difference	3	0.70	7.723	7.815	57	62	58	60	15	30	0.992	1.544
Final			61.130	101.978	57	67	65					
Initial			55.628	96.379	57	65	61					
Difference	4	0.90	5.502	5.599	57	66	63	65	10	0	0.995	1.613
Final			72.793	13.883	57	69	64					
Initial			66.132	7.063	57	66	63					
Difference	5	1.20	6.661	6.820	57	68	64	66	10	30	0.990	1.615
Final			78.313	19.513	57	73	65					
Initial			72.793	13.883	57	69	64					
Difference	6	2.00	5.520	5.630	57	71	65	68	7	0	0.996	1.735
									Average		0.994	1.616

Stack Temperature Sensor Calibration

Meter Box # : CM16 *Name :* DCR

Ambient Temperature : 57 °F *Date :* February 13, 2009

Calibrator Model # : CL23A

Serial # : T-276953

Date Of Certification : November 3, 2008

Primary Standards Directly Traceable National Institute of Standards and Technology (NIST)

Reference Source Temperature (°F)	Test Thermometer Temperature (°F)	Temperature Difference %
0	0	0.0
250	250	0.0
600	600	0.0
1200	1201	0.1

$$\frac{(\text{Ref. Temp., °F} + 460) - (\text{Test Therm. Temp., °F} + 460)}{\text{Ref. Temp., °F} + 460} * 100 <= 1.5\ \%$$

Meter Box Calibration

Dry Gas Meter No.	CM-16	Date:	March 30, 2009
Standard Meter No.	14159239	Calibrated By:	DCR
Standard Meter (Y)	0.9973	Barometric Pressure:	29.89

Run Number		Orifice Setting in H_2O Chg (H)	Standard Meter Gas Volume vr	Dry Gas Meter Gas Volume vd	Standard Meter Temp. F° tr	Dry Gas Meter Inlet Temp. F° tdi	Dry Gas Meter Outlet Temp. F° tdo	Dry Gas Meter Avg. Temp. F° td	Time Min	Time Sec	Y	Chg (H)
Final			110.530	98.160	58	73	70					
Initial			105.058	92.493	58	76	71					
Difference	1	0.20	5.472	5.667	58	75	71	73	20	30	0.992	1.499
Final			95.112	82.173	58	72	70					
Initial			87.433	74.243	58	75	70					
Difference	2	0.50	7.679	7.930	58	74	70	72	18	30	0.993	1.552
Final			79.618	66.173	60	74	69					
Initial			71.431	57.759	58	75	70					
Difference	3	0.70	8.187	8.414	59	75	70	72	17	0	0.996	1.620
Final			71.431	57.759	60	75	69					
Initial			65.183	51.328	60	74	68					
Difference	4	0.90	6.248	6.431	60	75	69	72	11	30	0.991	1.644
Final			87.433	74.243	60	75	70					
Initial			79.618	66.173	60	74	70					
Difference	5	1.20	7.815	8.070	60	75	70	72	12	30	0.988	1.653
Final			10.530	98.160	60	73	70					
Initial			5.058	92.493	60	76	71					
Difference	6	2.00	5.472	5.667	60	75	71	73	7	0	0.984	1.761
									Average		0.991	1.622

Stack Temperature Sensor Calibration

Meter Box # : CM-16 *Name :* DCR

Ambient Temperature : 60 °F *Date :* March 30, 2009

Calibrator Model # : CL23A

Serial # : T-276953

Date Of Certification : November 3, 2008

Primary Standards Directly Traceable National Institute of Standards and Technology (NIST)

Reference Source Temperature (° F)	Test Thermometer Temperature (° F)	Temperature Difference %
0	0	0.0
250	250	0.0
600	600	0.0
1200	1200	0.0

$$\frac{(\text{Ref. Temp., °F} + 460) - (\text{Test Therm. Temp., °F} + 460)}{\text{Ref. Temp., °F} + 460} * 100 <= 1.5\ \%$$

Platt Environmental Services, Inc.

1520 Kensington Road, Suite 204
Oak Brook, IL 60523-2139
630-521-9400
630-521-9494 fax

Nozzle Calibration Sheet
Set No. 3

Nominal Diameter	0.120	0.175	0.200	0.230	0.250	0.275	0.310	0.375	0.425	0.500	Other
Nozzle Diameter	.120	.178	.215	.236	.264	.278	.320	.363	.433	.499	
Nozzle Identification Number	2-4	2-6	#7	4-8M	#8	4-9	2-10	2-12	2-14	7-16	

Dry Gas Meter Calibration Sample Train Diagram

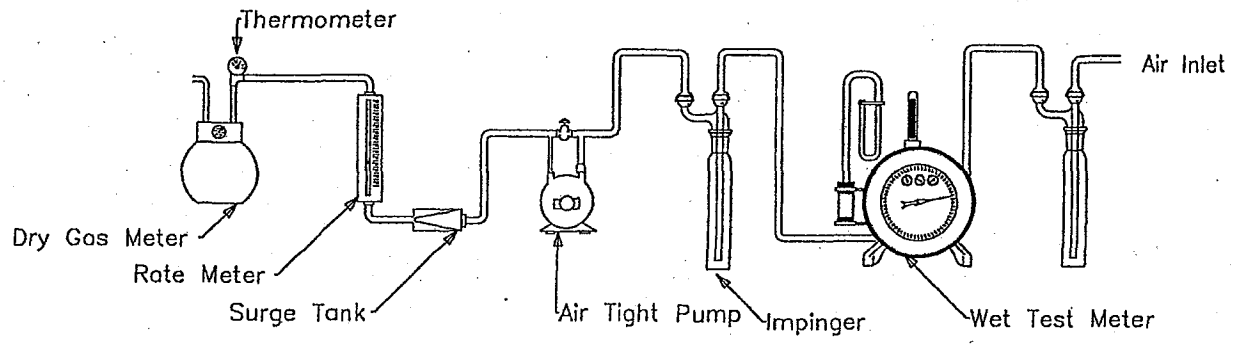

Isokinetic Sampling Cover Sheet

Plant Information

Run Number: 1 Date: 03/19/09 Project Number: M091105 B
Test Location: #14 BF Beehive Client Name: US Steel Plant Name: Gary Works
Duct Shape: Circular or Rectangular ~~Length:~~ ~~Width:~~ or Diameter: 13'
Source Condition: Normal - 1 Fan Test Method: 5 Flue Area: 132.732
Port Type: Flange Port Length: 7" Port Diameter: 3"

Meter and Probe Data

Operator: DCR Test Tech: ASHAU Meter ID: CM16 Meter Y Value: 0.994 ΔH Value: 1.616
Pitot ID: 008A Pitot Coefficient: 0.840 Probe Length: 13'
Probe Liner: SS Nozzle Diameter: 0.278 Train Type: Hotbox
Filter Number/Weight: 2193 0.3441 Thimble Number/Weight: —
Pre-Test Nozzle Leak Check: 0.0 @ 10 "Hg Post-Test Nozzle Leak Check: 0.0 @ 15 "Hg
Pre-Test Pitot Leak Check: 0/3" "H_2O Post-Test Pitot Leak Check: 0/3" "H_2O

Traverse Data

Ports Sampled: 2 Points/Port: 12 Min./Point: 3
Total Points: 24 Total Test Time: 72 Sample Plane: Horizontal or Vertical

Stack Parameters

Barometric Pressure: 29.89 Static Pressure: -0.2
CO_2 %: 0.1 / / / Avg. 0.1 O_2 %: 20.9 / / /Avg. 20.9 Determined by: Method 3 or Method 3A
Initial Imp. Volume or Weight: 200 Final Imp. Volume or Weight: 208 Imp. Volume or Weight Gain: 8
Initial Silica Weight: 212.2 Final Silica Weight: 223.7 Silica Weight Gain: 11.5
Balance used for impingers and/or silica weights (Model and S/N): _____ Nozzle Kit ID _____

Comments:

One Fan Running During Test

Isokinetic Sampling Field Data Sheet

Project Number: M091105B
Client: US Steel
Plant: Gary Works

Date: 03/19/09
Test Location: #14 BF Baghouse
Test Method: 5

Test Number: 1
Operator: DCR/ASHAV
Page Number: 1 of 1

Port-Point #.	Time	(ΔP)	Orifice Setting (ΔH) (5.406)	Meter Volume (V_m) ft^3, Actual	Square Root, ΔP	Meter Rate, Cubic Feet/Min. (1.362)	Theoretical Meter Volume, (V_m) ft^3, per point (×3)	Theoretical Meter Volume, (V_m) ft^3, total	Stack Temp, °F	Meter Temp Inlet, °F	Meter Temp Outlet, °F	Pump Vacuum, " Hg	Probe Temp. °F	Filter Temp. °F	Impinger Outlet Well Temp °F
1-1	8:03	0.45	2.4	55.350	0.671	0.902	2.705		101	50	48	5	250	251	44
2	8:06	0.52	2.7	58.040	0.721	0.976	2.929	58.055	101	50	49	5	249	250	45
3	8:09	0.48	2.6	60.984	0.693	0.938	2.814	60.984	98	51	49	5	248	250	45
4	8:12	0.46	2.5	63.750	0.678	0.918	2.755	63.798	96	52	49	5	250	251	45
5	8:15	0.47	2.5	66.550	0.686	0.929	2.785	66.553	94	53	49	5	251	250	46
6	8:18	0.42	2.2	69.330	0.648	0.883	2.648	69.338	93	53	49	5	251	250	46
7	8:21	0.44	2.4	71.980	0.663	0.903	2.710	71.986	93	53	49	5	250	250	46
8	8:24	0.51	2.8	74.690	0.714	0.973	2.918	74.696	90	53	49	5	251	250	46
9	8:27	0.79	4.3	77.610	0.889	1.211	3.632	77.614	89	53	49	7	251	250	46
10	8:30	0.81	4.4	81.240	0.9	1.226	3.677	81.246	89	53	49	7	251	250	47
11	8:33	0.75	4.05	84.923	0.866	1.180	3.539	84.923	88	53	49	7	251	250	47
12	8:36	0.68	3.7	88.460	0.825	1.123	3.369	88.462	88	53	49	6	251	250	47
	8:39			91.680				91.821							
2-1	8:41	0.38	2.1	91.680	0.616	0.840	2.519		87	51	48	5	251	250	48
2	8:44	0.42	2.3	94.010	0.648	0.883	2.648	94.038	87	51	48	5	251	250	48
3	8:47	0.39	2.1	96.680	0.624	0.851	2.552	96.686	86	51	48	5	249	251	48
4	8:50	0.45	2.4	99.230	0.671	0.914	2.741	99.238	85	51	48	5	251	250	48
5	8:53	0.42	2.3	101.970	0.648	0.883	2.648	101.979	85	51	48	5	251	249	48
6	8:56	0.48	2.6	104.620	0.693	0.944	2.831	104.627	84	51	48	5	250	248	47
7	8:59	0.54	2.9	107.450	0.735	1.001	3.003	107.458	84	51	48	5	250	249	47
8	9:02	0.65	3.5	110.460	0.806	1.098	3.294	110.461	83	51	48	5	251	252	46
9	9:05	0.72	3.9	113.740	0.849	1.156	3.467	113.755	83	51	47	5	251	250	46
10	9:08	0.78	4.2	117.200	0.883	1.203	3.609	117.222	82	51	47	6	250	249	46
11	9:11	0.77	4.2	120.820	0.877	1.195	3.585	120.831	82	51	47	6	250	251	46
12	9:14	0.67	3.6	124.410	0.819	1.115	3.345	124.416	81	51	47	6	249	249	46
	9:17			127.744				127.761							
					744										

Isokinetic Sampling Cover Sheet

Plant Information

Run Number: 2
Date: 03/19/09
Project Number: M091105B
Test Location: #14BE Baghouse Stack
Client Name: US Steel
Plant Name: Gary Works
Duct Shape: Circular or Rectangular ~~Length:~~ ~~Width:~~ or
Diameter: 13'
Source Condition: Normal - 1 Fan Only
Test Method: 5
Flue Area: 132.732
Port Type: Flange
Port Length: 7"
Port Diameter: 3"

Meter and Probe Data

Operator: DCR Test Tech: ASHAO
Meter ID: CM16
Meter Y Value: 0.994 ΔH Value: 1.616
Pitot ID: 008A
Pitot Coefficient: 0.840
Probe Length: 13
Probe Liner: SS
Nozzle Diameter: 0.264
Train Type: Anderson
Filter Number/Weight: 2194 0.3453
Thimble Number/Weight:
Pre-Test Nozzle Leak Check: 0.0 @ 10 "Hg
Post-Test Nozzle Leak Check: 0.0 @ 10 "Hg
Pre-Test Pitot Leak Check: 0/3" "H_2O
Post-Test Pitot Leak Check: 0/3" "H_2O

Traverse Data

Ports Sampled: 2
Points/Port: 12
Min./Point: 3
Total Points: 24
Total Test Time: 72
Sample Plane: Horizontal or Vertical

Stack Parameters

Barometric Pressure: 29.89
Static Pressure: -0.2
CO_2 %: 0.1 / / / Avg. 0.1
O_2 %: 20.9 / / / Avg. 20.9
Determined by: Method 3 or Method 3A
Initial Imp. Volume or Weight: 200
Final Imp. Volume or Weight: 200
Imp. Volume or Weight Gain: 0
Initial Silica Weight: 209.5
Final Silica Weight: 220.9
Silica Weight Gain: 11.4
Balance used for impingers and/or silica weights (Model and S/N):
Nozzle Kit ID 6

Comments:

1 Fan Running

Change Nozzle to 0.264

Isokinetic Sampling Field Data Sheet

Project Number: M091105 B
Client: US Steel - Gary Works
Plant: Gary Works

Date: 03/19/09
Test Location: #14 of Baghouse
Test Method: 5

Test Number: 2
Operator: DCR/ASHAU
Page Number: 1 of 1

Port-Point #.	Time	(ΔP)	Orifice Setting (ΔH) 4.5	Meter Volume (V_m) ft^3, Actual	Square Root, ΔP	Meter Rate, Cubic Feet/Min. (1.257)	Theoretical Meter Volume, (V_m) ft^3, per point (×3)	Theoretical Meter Volume, (V_m) ft^3, total	Stack Temp, °F	Meter Temp Inlet, °F	Meter Temp Outlet, °F	Pump Vacuum, " Hg	Probe Temp. °F	Filter Temp. °F	Impinger Outlet Well Temp °F
1-1	9:30	0.40	2.0	27.902	0.632	0.777	2.330		80	53	44	6	247	260	38
2	9:33	0.45	2.0	30.230	0.671	0.824	2.471	30.232	80	53	44	6	248	250	38
3	9:36	0.48	2.1	32.700	0.693	0.857	2.552	32.703	80	54	44	6	249	251	38
4	9:39	0.53	2.4	35.250	0.728	0.894	2.682	35.255	80	55	44	6	248	252	39
5	9:42	0.49	2.2	37.930	0.700	0.860	2.579	37.937	79	56	44	6	249	251	39
6	9:45	0.48	2.1	40.510	0.693	0.857	2.552	40.516	79	58	45	6	251	253	40
7	9:48	0.53	2.4	43.060	0.728	0.894	2.682	43.068	79	58	45	6	252	252	40
8	9:51	0.64	2.9	45.720	0.800	0.982	2.947	45.750	79	59	45	6	251	251	41
9	9:54	0.73	3.3	48.620	0.854	1.069	3.209	48.697	79	60	46	7	251	250	42
10	9:57	0.82	3.7	51.890	0.906	1.134	3.401	51.906	79	60	46	7	248	249	42
11	10:00	0.85	3.8	55.290	0.922	1.154	3.462	55.307	79	60	46	7	249	248	42
12	10:03	0.80	3.6	58.760	0.894	1.120	3.359	58.770	79	60	46	7	248	249	42
	10:06			62.120				62.129							
2-1	10:08	0.45	2.0	62.120	0.671	0.840	2.520		81	59	47	5	250	251	42
2	10:11	0.48	2.2	64.649	0.693	0.867	2.602	64.649	81	57	47	5	250	252	42
3	10:14	0.53	2.4	67.240	0.728	0.911	2.734	67.251	80	59	48	6	250	252	43
4	10:17	0.49	2.2	69.980	0.700	0.876	2.629	69.985	80	59	48	6	250	251	43
5	10:20	0.43	1.9	72.610	0.656	0.821	2.463	72.614	80	59	48	6	250	251	43
6	10:23	0.37	1.7	74.890	0.608	0.762	2.285	74.899	80	59	48	6	250	250	43
7	10:26	0.55	2.5	77.180	0.742	0.929	2.786	77.184	80	59	49	6	250	251	43
8	10:29	0.64	2.9	79.960	0.800	1.002	3.005	79.970	80	59	49	6	250	249	43
9	10:32	0.75	3.4	82.970	0.866	1.084	3.252	82.975	80	59	49	6	258	250	43
10	10:35	0.83	3.7	86.220	0.911	1.141	3.422	86.228	80	59	49	6	258	251	43
11	10:38	0.88	4.0	89.646	0.938	1.174	3.523	89.650	80	59	49	6	257	250	43
12	10:41	0.72	3.2	93.170	0.849	1.062	3.187	93.173	80	59	49	6	257	257	43
	10:44			96.340				96.360							

Isokinetic Sampling Cover Sheet

Plant Information

Run Number: 3
Date: 03/19/09
Project Number: M091105B
Test Location: IL BF Baghouse Stack
Client Name: US Steel
Plant Name: Gary Works
Duct Shape: Circular or Rectangular
~~Length: Width: or~~
Diameter: 13'
Source Condition: Normal
Test Method: 5
Flue Area: 132.732
Port Type: Flange
Port Length: 7"
Port Diameter: 3"

Meter and Probe Data

Operator: DCR Test Tech: ASHAU
Meter ID: CM16
Meter Y Value: 0.994 ΔH Value: 1.616
Pitot ID: 008A
Pitot Coefficient: 0.840
Probe Length: 13'
Probe Liner: SS
Nozzle Diameter: 0.264
Train Type: HOT BOX
Filter Number/Weight: 2191 0.3457
Thimble Number/Weight:
Pre-Test Nozzle Leak Check: 0.0 @ 10 "Hg
Post-Test Nozzle Leak Check: 0.0 @ 16 "Hg
Pre-Test Pitot Leak Check: 0/3" "H_2O
Post-Test Pitot Leak Check: 0/3" "H_2O

Traverse Data

Ports Sampled: 2
Points/Port: 12
Min./Point: 3
Total Points: 24
Total Test Time: 72
Sample Plane: Horizontal or Vertical

Stack Parameters

Barometric Pressure: 29.89
Static Pressure: -0.2
CO_2 %: 0.1 / / / Avg. 0.1
O_2 %: 20.9 / / / Avg. 20.9
Determined by: Method 3 or Method 3A
Initial Imp. Volume or Weight: 200
Final Imp. Volume or Weight: 200
Imp. Volume or Weight Gain: 0
Initial Silica Weight: 211.3
Final Silica Weight: 224.3
Silica Weight Gain: 13.0
Balance used for impingers and/or silica weights (Model and S/N):
Nozzle Kit ID 6

Comments:

Change Nozzle to 0.264

Isokinetic Sampling Field Data Sheet

Project Number:	M091105B	Date:	03/19/09	Test Number:	3
Client:	US Steel	Test Location:	M5	Operator:	DCR
Plant:	Gary Works	Test Method:	D14BF Baghouse	Page Number:	1 of 1

Port-Point #.	Time	(ΔP)	4.53 Orifice Setting (ΔH)	Meter Volume (V_m) ft^3, Actual	Square Root, ΔP	1.245 Meter Rate, Cubic Feet/Min.	x3 Theoretical Meter Volume, (V_m) ft^3, per point	Theoretical Meter Volume, (V_m) ft^3, total	Stack Temp, °F	Meter Temp Inlet, °F	Meter Temp Outlet, °F	Pump Vacuum, " Hg	Probe Temp. °F	Filter Temp. °F	Impinger Outlet Well Temp °F
1-1	10:57	0.45	2.0	96.763	0.671	0.835	2.505		79	52	47	5	247	251	40
2	11:00	0.48	2.2	99.266	0.693	0.863	2.587	99.269	79	52	47	5	248	252	40
3	11:03	0.51	2.3	101.850	0.714	0.889	2.667	101.857	79	53	47	5	249	251	40
4	11:06	0.54	2.5	104.520	0.735	0.915	2.745	104.524	79	53	47	5	249	250	40
5	11:09	0.46	2.1	107.260	0.678	0.844	2.533	107.269	79	53	47	5	251	248	40
6	11:12	0.48	2.2	109.796	0.693	0.863	2.588	109.807	79	54	48	5	250	250	40
7	11:15	0.52	2.4	112.380	0.721	0.898	2.693	112.390	79	53	47	5	248	250	41
8	11:18	0.63	2.9	115.030	0.794	0.988	2.965	115.083	79	52	47	5	250	249	41
9	11:21	0.74	3.3	118.040	0.860	1.070	3.213	118.048	79	52	47	5	251	248	41
10	11:24	0.86	3.9	121.250	0.927	1.155	3.464	121.261	79	52	47	5	250	249	41
11	11:27	0.89	4.0	124.720	0.943	1.175	3.524	124.725	79	52	47	5	249	251	41
12	11:30	0.82	3.7	128.240	0.906	1.127	3.382	128.249	79	52	47	5	249	250	41
	11:33			131.598				131.631							
2-1	11:35	0.44	2.0	131.598	0.663	0.826	2.478		78	52	47	5	248	250	41
2	11:38	0.49	2.2	134.100	0.700	0.872	2.615	134.109	78	52	47	5	249	250	41
3	11:41	0.54	2.4	136.720	0.735	0.915	2.745	136.724	78	52	47	5	250	252	41
4	11:44	0.47	2.1	139.460	0.686	0.854	2.561	139.469	78	52	47	5	250	251	41
5	11:47	0.43	1.9	142.000	0.656	0.816	2.449	142.030	78	52	47	5	250	250	41
6	11:50	0.49	2.2	144.470	0.700	0.872	2.615	144.479	78	52	47	5	250	250	42
7	11:53	0.54	2.5	147.050	0.735	0.915	2.745	147.054	78	52	47	5	250	251	42
8	11:56	0.56	2.5	149.830	0.748	0.932	2.795	149.839	78	52	47	5	250	250	42
9	11:59	0.62	2.8	152.630	0.787	0.980	2.941	152.634	78	52	47	5	250	250	42
10	12:02	0.72	3.3	155.570	0.849	1.056	3.169	155.575	78	52	47	5	250	250	42
11	12:05	0.75	3.4	158.740	0.866	1.078	3.234	158.744	78	52	47	5	250	257	43
12	12:08	0.62	2.8	161.970	0.787	0.980	2.941	161.978	78	52	46	5	251	252	43
	12:11			164.524				164.919							

OCS Environmental, Inc.
Method 9 VE Inspection Form

STACK TEST
1ST RUN

Page 1 of 2

Date: 03-19-09
Source: #14BF Roof
Observation Start Time: 08:03
Observation End Time: 08:59
Observer's Position: 14BF3
Distance to source: 540 YRDS
Direction to source: NW

Height of source: 121'
Vertical angle to source: 40°

	Start	End
Emissions color:	AS NOTED	SAME
Background:	SKY	
Sky Conditions:	CLEAR	
Wind Speed:	8	
Wind Direction:	NW	
Ambient Temp:	40°	
Relative Humidity%:	54%	
Wet Bulb Temp:	—	—

Plume Type: Attached Detached None

Comments	0	15	30	45			0	15	30	45	Comments
					0	30	0	0	0	0	
					1	31	0	0	0	0	
					2	32	0	0	0	0	
	0	0	0	0	3	33	0	0	0	0	
	0	0	0	0	4	34	0	0	0	0	
	0	0	0	0	5	35	0	0	0	0	
	0	0	0	0	6	36	0	0	0	0	
	0	0	0	0	7	37	0	0	0	0	
	0	0	0	0	8	38	0	0	0	0	
	0	0	0	0	9	39	0	0	0	0	
	0	0	0	0	10	40	0	0	0	0	
	0	0	0	0	11	41	0	0	0	0	
	0	0	0	0	12	42	0	0	0	0	
	0	0	0	0	13	43	0	0	0	0	
	0	0	0	0	14	44	0	0	0	0	
	0	0	0	0	15	45	0	0	0	0	
	0	0	0	0	16	46	0	0	0	0	
	0	0	0	0	17	47	0	0	0	0	
	0	0	0	0	18	48	0	0	0	0	
	0	0	0	0	19	49	0	0	0	0	
	0	0	0	0	20	50	0	0	0	0	
	0	0	0	0	21	51	0	0	0	0	
	0	0	0	0	22	52	0	0	0	0	
	0	0	0	0	23	53	0	0	0	0	
	0	0	0	0	24	54	0	0	0	0	
	0	0	0	0	25	55	0	0	0	0	
	0	0	0	0	26	56	0	0	0	0	
	0	0	0	0	27	57	0	0	0	0	
	0	0	0	0	28	58	0	0	0	0	
	0	0	0	0	29	59	0	0	0	0	

Additional Info (include steam dissipation point)

Observer's Signature: Danny Wolff

20071107 Method 9 Inspection Form.doc

OCS Environmental, Inc.
Method 9 VE Inspection Form

#14 BF STACK TEST
1ST RUN

Page 2 of 2

			Start	End
Date:	03-19-09	Emissions color:	AS NOTED	SAME
Source:	#14 BF BOOP	Background:	SKY	
Observation Start Time:	09:00	Sky Conditions:	CLEAR	
Observation End Time:	09:02:45	Wind Speed:	8	
Observer's Position:	#14 BF 3	Wind Direction:	NW	
Distance to source:	540 YRDS	Ambient Temp:	40°	
Direction to source:	NW	Relative Humidity%:	54%	
Height of source:	121'	Wet Bulb Temp:	—	—
Vertical angle to source:	4°			

Plume Type: (Attached) Detached None

Comments	0	15	30	45			0	15	30	45	Comments
	0	0	0	0	0	30					
	0	0	0	0	1	31					
	0	0	0	0	2	32					
					3	33					
					4	34					
					5	35					
					6	36					
					7	37					
					8	38					
					9	39					
					10	40					
					11	41					
					12	42					
					13	43					
					14	44					
					15	45					
					16	46					
					17	47					
					18	48					
					19	49					
					20	50					
					21	51					
					22	52					
					23	53					
					24	54					
					25	55					
					26	56					
					27	57					
					28	58					
					29	59					

Additional Info (include steam dissipation point)

Observer's Signature

Danny Walsh

20071107 Method 9 Inspection Form.doc

OCS Environmental, Inc.
Method 9 Source Layout Sketch
#14 BF. STACK TEST
1ST RUN

Date: 03/19/09
Observer Name: WALSH
Begin Time: 08:03 Time End: 09:02:45

No Sun Visible Times

Observation Point

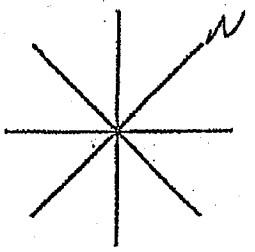

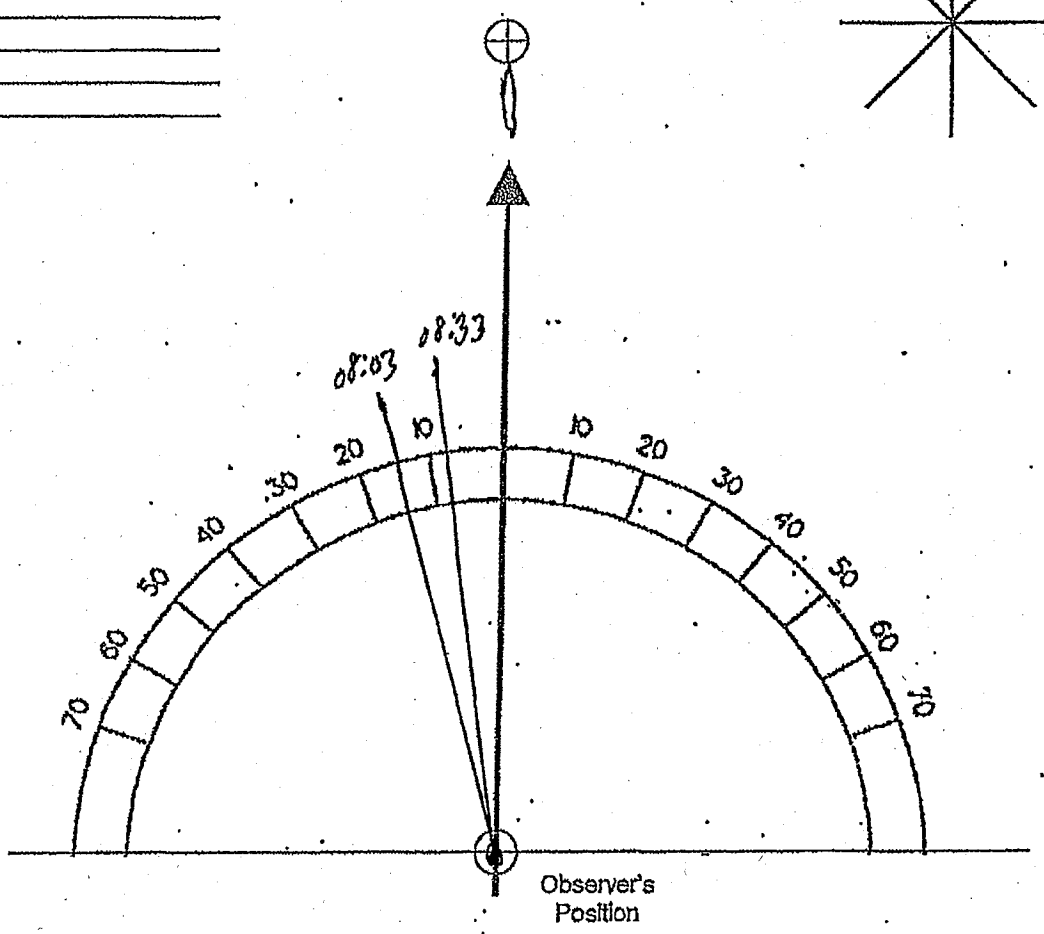

Signature: Danny Walsh

20071107 Method 9 Source Layout Sketch.doc

OCS Environmental, Inc.
Method 9 VE Inspection Form
#14 BF STACK TEST
2ND RUN

Page 1 of 2

			Start	End
Date:	03-19-09	Emissions color:	AS NOTED	SAME
Source:	#14BF ROOF	Background:	SKY	
Observation Start Time:	09:30	Sky Conditions:	CLEAR	
Observation End Time:	09:59:45	Wind Speed:	8	
Observer's Position:	14BF3	Wind Direction:	NW	
Distance to source:	540 YRDS	Ambient Temp:	46°	
Direction to source:	NW	Relative Humidity%:	54%	
Height of source:	121'	Wet Bulb Temp:	—	—
Vertical angle to source:	4'			

Plume Type: (Attached) Detached None

Comments	0	15	30	45			0	15	30	45	Comments
					0	30	0	0	0	0	
					1	31	0	0	0	0	
					2	32	0	0	0	0	
					3	33	0	0	0	0	
					4	34	0	0	0	0	
					5	35	0	0	0	0	
					6	36	0	0	0	0	
					7	37	0	0	0	0	
					8	38	0	0	0	0	
					9	39	0	0	0	0	
					10	40	0	0	0	0	
					11	41	0	0	0	0	
					12	42	0	0	0	0	
					13	43	0	0	0	0	
					14	44	0	0	0	0	
					15	45	0	0	0	0	
					16	46	0	0	0	0	
					17	47	0	0	0	0	
					18	48	0	0	0	0	
					19	49	0	0	0	0	
					20	50	0	0	0	0	
					21	51	0	0	0	0	
					22	52	0	0	0	0	
					23	53	0	0	0	0	
					24	54	0	0	0	0	
					25	55	0	0	0	0	
					26	56	0	0	0	0	
					27	57	0	0	0	0	
					28	58	0	0	0	0	
					29	59	0	0	0	0	

Additional Info (include steam dissipation point)

Observer's Signature

20071107 Method 9 Inspection Form.doc

OCS Environmental, Inc.
Method 9 VE Inspection Form
#14 BF STACK TEST
2ND RUN

Page 2 of 2

			Start	End
Date:	03-19-09	Emissions color:	AS NOTED	SAME
Source:	#14 BF ROOF	Background:	SKY	
Observation Start Time:	10:00	Sky Conditions:	CLEAR	
Observation End Time:	10:29:45	Wind Speed:	8	
Observer's Position:	14 BF 3	Wind Direction:	NW	
Distance to source:	540 YRDS	Ambient Temp:	40°	
Direction to source:	NW	Relative Humidity%:	54%	
		Wet Bulb Temp:	—	—
Height of source:	121'			
Vertical angle to source:	40			

Plume Type: (Attached) Detached None

Comments	0	15	30	45			0	15	30	45	Comments
	0	0	0	0	0	30					
	0	0	0	0	1	31					
	0	0	0	0	2	32					
	0	0	0	0	3	33					
	0	0	0	0	4	34					
	0	0	0	0	5	35					
	0	0	0	0	6	36					
	0	0	0	0	7	37					
	0	0	0	0	8	38					
	0	0	0	0	9	39					
	0	0	0	0	10	40					
	0	0	0	0	11	41					
	0	0	0	0	12	42					
	0	0	0	0	13	43					
	0	0	0	0	14	44					
	0	0	0	0	15	45					
	0	0	0	0	16	46					
	0	0	0	0	17	47					
	0	0	0	0	18	48					
	0	0	0	0	19	49					
	0	0	0	0	20	50					
	0	0	0	0	21	51					
	0	0	0	0	22	52					
	0	0	0	0	23	53					
	0	0	0	0	24	54					
	0	0	0	0	25	55					
	0	0	0	0	26	56					
	0	0	0	0	27	57					
	0	0	0	0	28	58					
	0	0	0	0	29	59					

Additional info (include steam dissipation point)

Observer's Signature

20071107 Method 9 Inspection Form.doc

OCS Environmental, Inc.
Method 9 Source Layout Sketch
#14 BF STACK TEST
2ND RUN

Date: 03/19/09
Observer Name: WALSH
Begin Time: 09:30 Time End: 10:29:45

No Sun Visible Times

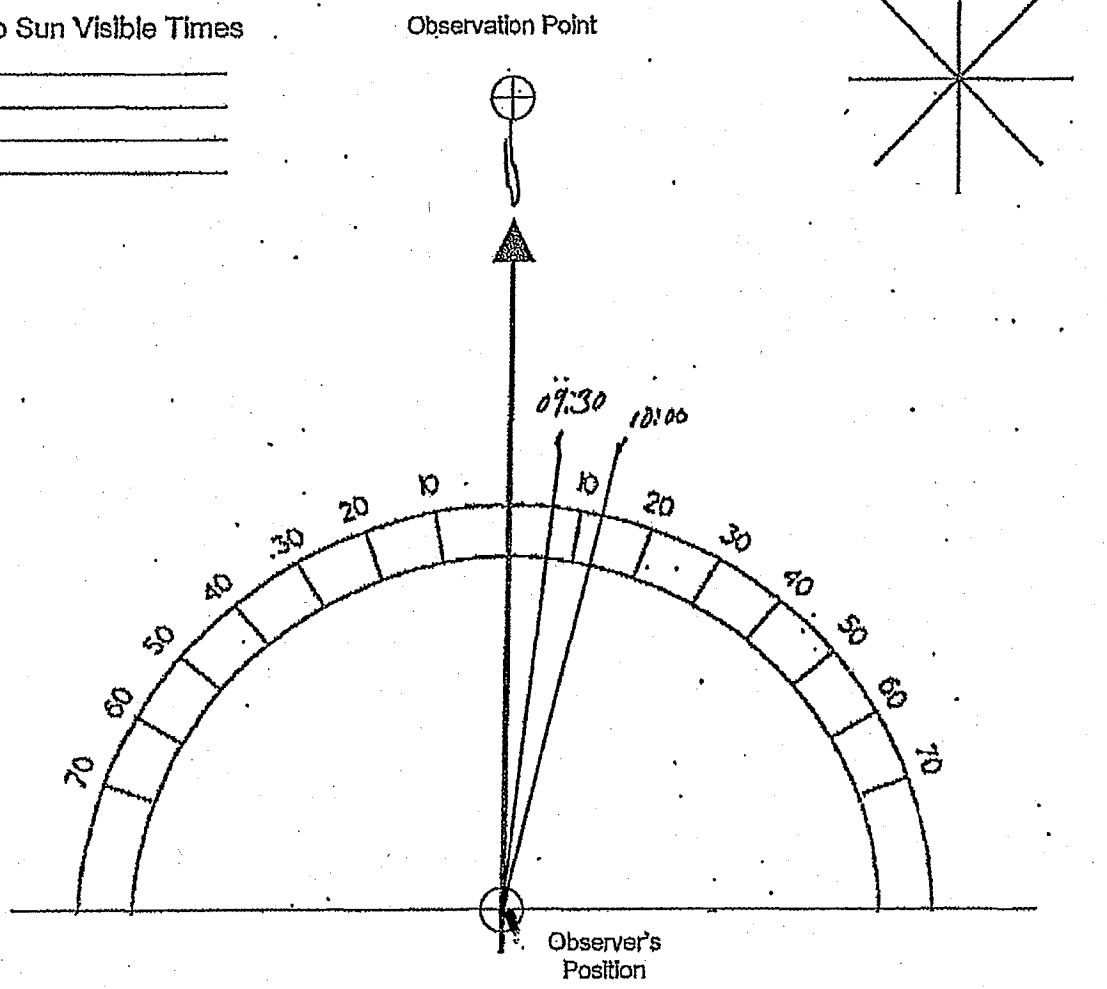

Signature: D. Walsh

20071107 Method 9 Source Layout Sketch.doc

OCS Environmental, Inc.
Method 9 VE Inspection Form
#14 BF STACK TEST
3RD RUN

Page 1 of 2

			Start	End
Date:	03-19-09	Emissions color:	AS NOTED	SAME
Source:	#14 BF ROOF	Background:	SKY	↓
Observation Start Time:	10:57	Sky Conditions:	CLEAR	↓
Observation End Time:	10:59:45	Wind Speed:	8	↓
Observer's Position:	14 BF 3	Wind Direction:	NW	↓
Distance to source:	540 YARDS	Ambient Temp:	40°	↓
Direction to source:	NW	Relative Humidity%:	54%	↓
Height of source:	121'	Wet Bulb Temp:	—	—
Vertical angle to source:	4°			

Plume Type: (Attached) Detached None

Comments	0	15	30	45			0	15	30	45	Comments
					0	30					
					1	31					
					2	32					
					3	33					
					4	34					
					5	35					
					6	36					
					7	37					
					8	38					
					9	39					
					10	40					
					11	41					
					12	42					
					13	43					
					14	44					
					15	45					
					16	46					
					17	47					
					18	48					
					19	49					
					20	50					
					21	51					
					22	52					
					23	53					
					24	54					
					25	55					
					26	56					
					27	57	0	0	0	0	
					28	58	0	0	0	0	
					29	59	0	0	0	0	

Additional info (include steam dissipation point)

Observer's Signature

20071107 Method 9 Inspection Form.doc

OCS Environmental, Inc.
Method 9 VE Inspection Form
#14 BF STACK TEST
3RD RUN

			Start	End
Date:	03-19-09	Emissions color:	AS NOTED	SAME
Source:	#14 BF ROOF	Background:	SKY	
Observation Start Time:	11:00	Sky Conditions:	CLEAN	
Observation End Time:	11:56:45	Wind Speed:	8	
Observer's Position:	14BF3	Wind Direction:	NW	
Distance to source:	540 YRDS	Ambient Temp:	40°	
Direction to source:	NW	Relative Humidity%:	54%	
		Wet Bulb Temp:	—	—
Height of source:	121'			
Vertical angle to source:	4°			

Plume Type: (Attached) Detached None

Comments	0	15	30	45			0	15	30	45	Comments
	0	0	0	0	0	30	0	0	0	0	
	0	0	0	0	1	31	0	0	0	0	
	0	0	0	0	2	32	0	0	0	0	
	0	0	0	0	3	33	0	0	0	0	
	0	0	0	0	4	34	0	0	0	0	
	0	0	0	0	5	35	0	0	0	0	
	0	0	0	0	6	36	0	0	0	0	
	0	0	0	0	7	37	0	0	0	0	
	0	0	0	0	8	38	0	0	0	0	
	0	0	0	0	9	39	0	0	0	0	
	0	0	0	0	10	40	0	0	0	0	
	0	0	0	0	11	41	0	0	0	0	
	0	0	0	0	12	42	0	0	0	0	
	0	0	0	0	13	43	0	0	0	0	
	0	0	0	0	14	44	0	0	0	0	
	0	0	0	0	15	45	0	0	0	0	
	0	0	0	0	16	46	0	0	0	0	
	0	0	0	0	17	47	0	0	0	0	
	0	0	0	0	18	48	0	0	0	0	
	0	0	0	0	19	49	0	0	0	0	
	0	0	0	0	20	50	0	0	0	0	
	0	0	0	0	21	51	0	0	0	0	
	0	0	0	0	22	52	0	0	0	0	
	0	0	0	0	23	53	0	0	0	0	
	0	0	0	0	24	54	0	0	0	0	
	0	0	0	0	25	55	0	0	0	0	
	0	0	0	0	26	56	0	0	0	0	
	0	0	0	0	27	57					
	0	0	0	0	28	58					
	0	0	0	0	29	59					

Additional Info (Include steam dissipation point)

Observer's Signature

20071107 Method 9 Inspection Form.doc

OCS Environmental, Inc.
Method 9 Source Layout Sketch
#14 BF STACK TEST
3RD RUN

Date: 03 / 19 / 09

Observer Name: WALSH

Begin Time: 10:57 Time End: 11:56:45

No Sun Visible Times

Observation Point

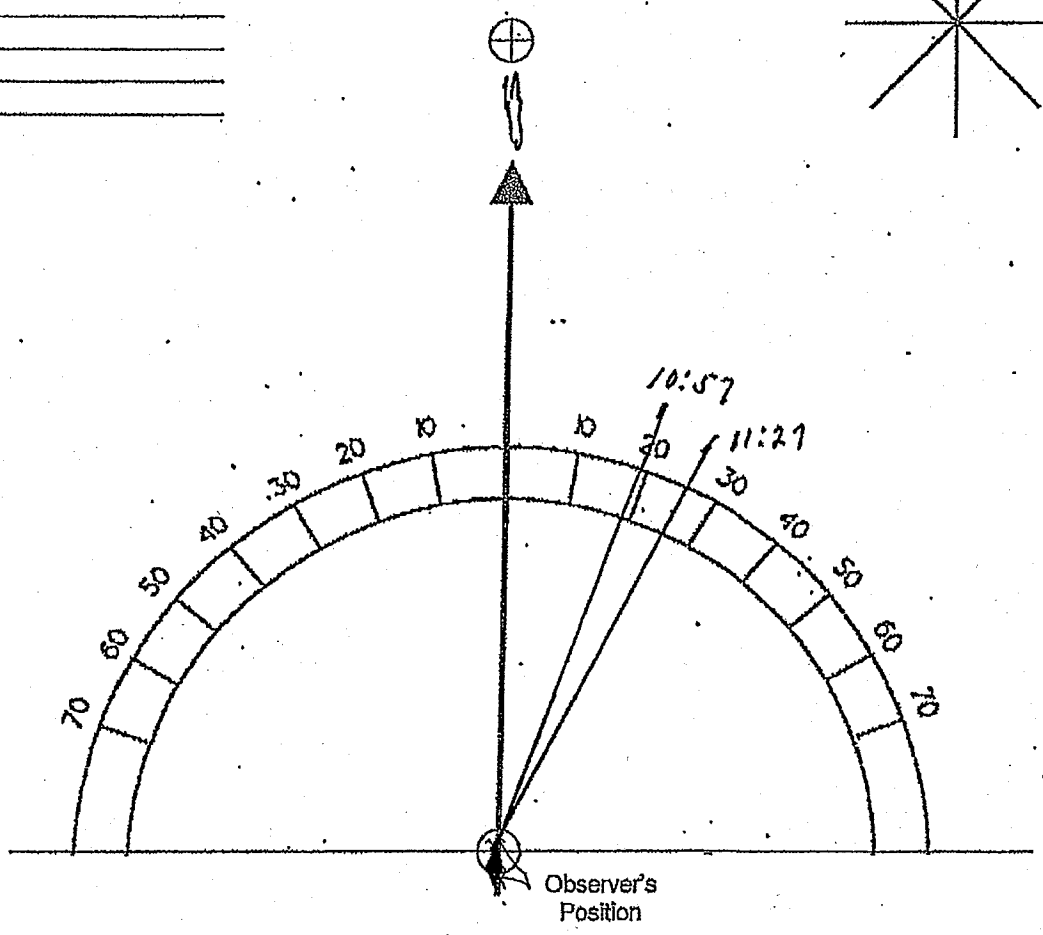

Signature: D. Walsh

20071107 Method 9 Source Layout Sketch.doc

OCS Environmental, Inc.
Method 9 VE Inspection Form

Date: 3-19-09
Source: #1 HDF BAGHOUSE
Observation Start Time: 0803 00
Observation End Time: 0859 45
Observer's Position: NNE OF SOURCE
Distance to source: 700 YDS.
Direction to source: SSW

Height of source: N/A
Vertical angle to source: 4°

	Start	End
Emissions color:	AS NOTED	SAME
Background:	SKY	
Sky Conditions:	CLEAR	
Wind Speed:	8	
Wind Direction:	NN	
Ambient Temp:	40°	
Relative Humidity%:	54%	
Wet Bulb Temp:		

Plume Type: Attached Detached None

TEST # 1

Comments	0	15	30	45			0	15	30	45	Comments
					0	30	0	0	0	0	
					1	31	0	0	0	0	
					2	32	0	0	0	0	
START TEST #1	0	0	0	0	3	33	0	0	0	0	
	0	0	0	0	4	34	0	0	0	0	
	0	0	0	0	5	35	0	0	0	0	
	0	0	0	0	6	36	0	0	0	0	
	0	0	0	0	7	37	0	0	0	0	
	0	0	0	0	8	38	0	0	0	0	
	0	0	0	0	9	39	0	0	0	0	
	0	0	0	0	10	40	0	0	0	0	
	0	0	0	0	11	41	0	0	0	0	
	0	0	0	0	12	42	0	0	0	0	
	0	0	0	0	13	43	0	0	0	0	
	0	0	0	0	14	44	0	0	0	0	
	0	0	0	0	15	45	0	0	0	0	
	0	0	0	0	16	46	0	0	0	0	
	0	0	0	0	17	47	0	0	0	0	
	0	0	0	0	18	48	0	0	0	0	
	0	0	0	0	19	49	0	0	0	0	
	0	0	0	0	20	50	0	0	0	0	
	0	0	0	0	21	51	0	0	0	0	
	0	0	0	0	22	52	0	0	0	0	
	0	0	0	0	23	53	0	0	0	0	
	0	0	0	0	24	54	0	0	0	0	
	0	0	0	0	25	55	0	0	0	0	
	0	0	0	0	26	56	0	0	0	0	
	0	0	0	0	27	57	0	0	0	0	
	0	0	0	0	28	58	0	0	0	0	
	0	0	0	0	29	59					

Additional info (include steam dissipation point)

Observer's Signature: Johnson

20071107 Method 9 Inspection Form.doc

OCS Environmental, Inc.
Method 9 VE Inspection Form

Date: 3-19-09
Source: #14 BF BAGHOUSE
Observation Start Time: 0900 00
Observation End Time: 0902 45
Observer's Position: NNE of Source
Distance to source: 100 yds
Direction to source: SSW

Height of source: N/A
Vertical angle to source: 4'

	Start	End
Emissions color:	AS NOTE	SAME
Background:	SKY	
Sky Conditions:	Clear	
Wind Speed:	8	
Wind Direction:	N	
Ambient Temp:	40°	
Relative Humidity%:	54%	
Wet Bulb Temp:		

Plume Type: (Attached) Detached None

TEST #1

Comments	0	15	30	45			0	15	30	45	Comments
	0	0	0	0	0	30					
	0	0	0	0	1	31					
END TEST #1	0	0	0	0	2	32					
					3	33					
					4	34					
					5	35					
					6	36					
					7	37					
					8	38					
					9	39					
					10	40					
					11	41					
					12	42					
					13	43					
					14	44					
					15	45					
					16	46					
					17	47					
					18	48					
					19	49					
					20	50					
					21	51					
					22	52					
					23	53					
					24	54					
					25	55					
					26	56					
					27	57					
					28	58					
					29	59					

Additional info (include steam dissipation point)

Observer's Signature: J Johnson

20071107 Method 9 Inspection Form.doc

OCS Environmental, Inc.
Method 9 VE Inspection Form

Date: 3-19-09
Source: #14 BF BAGHOUSE
Observation Start Time: 0930 AM
Observation End Time: 0959 AM
Observer's Position: SSE OF SOURCE
Distance to source: 200 YDS
Direction to source: NNW

Height of source: N/A
Vertical angle to source: 14°

	Start	End
Emissions color:	AS NOTED	SAME
Background:	SKY	
Sky Conditions:	CLEAR	
Wind Speed:	8	
Wind Direction:	NW	
Ambient Temp:	40°	
Relative Humidity%:	54%	
Wet Bulb Temp:		

Plume Type: Attached, Detached None

TEST # 2

Comments	0	15	30	45			0	15	30	45	Comments
					0	30	0	0	0	0	
					1	31	0	0	0	0	
					2	32	0	0	0	0	
					3	33	0	0	0	0	
					4	34	0	0	0	0	
					5	35	0	0	0	0	
					6	36	0	0	0	0	
					7	37	0	0	0	0	
					8	38	0	0	0	0	
					9	39	0	0	0	0	
					10	40	0	0	0	0	
					11	41	0	0	0	0	
					12	42	0	0	0	0	
					13	43	0	0	0	0	
					14	44	0	0	0	0	
					15	45	0	0	0	0	
					16	46	0	0	0	0	
					17	47	0	0	0	0	
					18	48	0	0	0	0	
					19	49	0	0	0	0	
					20	50	0	0	0	0	
					21	51	0	0	0	0	
					22	52	0	0	0	0	
					23	53	0	0	0	0	
					24	54	0	0	0	0	
					25	55	0	0	0	0	
					26	56	0	0	0	0	
					27	57	0	0	0	0	
					28	58	0	0	0	0	
					29	59	0	0	0	0	

Additional Info (Include steam dissipation point)

Observer's Signature: J Johnson

20071107 Method 9 Inspection Form.doc

OCS Environmental, Inc.
Method 9 VE Inspection Form

Date: 3-19-09
Source: #14 BK BAGHOUSE
Observation Start Time: 1000 00
Observation End Time: 102945
Observer's Position: SSE OF SOURCE
Distance to source: 200 YDS
Direction to source: NNW

Height of source: N/A
Vertical angle to source: 14°

	Start	End
Emissions color:	AS NOTED	SAME
Background:	SKY	
Sky Conditions:	CLEAR	
Wind Speed:	5	
Wind Direction:	NW	
Ambient Temp:	40°	
Relative Humidity%:	54%	
Wet Bulb Temp:		

Plume Type: Attached Detached None

Comments	0	15	30	45			0	15	30	45	Comments
	0	0	0	0	0	30					
	0	0	0	0	1	31					
	0	0	0	0	2	32					
	0	0	0	0	3	33					
	0	0	0	0	4	34					
	0	0	0	0	5	35					
	0	0	0	0	6	36					
	0	0	0	0	7	37					
	0	0	0	0	8	38					
	0	0	0	0	9	39					
	0	0	0	0	10	40					
	0	0	0	0	11	41					
	0	0	0	0	12	42					
	0	0	0	0	13	43					
	0	0	0	0	14	44					
	0	0	0	0	15	45					
	0	0	0	0	16	46					
	0	0	0	0	17	47					
	0	0	0	0	18	48					
	0	0	0	0	19	49					
	0	0	0	0	20	50					
	0	0	0	0	21	51					
	0	0	0	0	22	52					
	0	0	0	0	23	53					
	0	0	0	0	24	54					
	0	0	0	0	25	55					
	0	0	0	0	26	56					
	0	0	0	0	27	57					
	0	0	0	0	28	58					
END TEST #2 ↑	0	0	0	0	29	59					

Additional Info (include steam dissipation point)

Observer's Signature: J. Johnson

20071107 Method 9 Inspection Form.doc

OCS Environmental, Inc.
Method 9 VE Inspection Form

Page 1 of 2

Date: 3-19-09
Source: #4 BF BAGHOUSE
Observation Start Time: 1057 00
Observation End Time: 1059 45
Observer's Position: SSE OF SOURCE
Distance to source: 200 YDS
Direction to source: NNW

Height of source: NA
Vertical angle to source: 14°

	Start	End
Emissions color:	AS NOTED	SAME
Background:	SKY	
Sky Conditions:	CLEAR	
Wind Speed:	5	
Wind Direction:	NW	
Ambient Temp:	40°	
Relative Humidity%:	54%	
Wet Bulb Temp:		

Plume Type: Attached Detached None

TEST #3

Comments	0	15	30	45			0	15	30	45	Comments
					0	30					
					1	31					
					2	32					
					3	33					
					4	34					
					5	35					
					6	36					
					7	37					
					8	38					
					9	39					
					10	40					
					11	41					
					12	42					
					13	43					
					14	44					
					15	45					
					16	46					
					17	47					
					18	48					
					19	49					
					20	50					
					21	51					
					22	52					
					23	53					
					24	54					
					25	55					
					26	56					
					27	57	0	0	0	0	START TEST
					28	58	0	0	0	0	#3
					29	59	0	0	0	0	

Additional info (include steam dissipation point)

Observer's Signature: J. Johnson

20071107 Method 9 Inspection Form.doc

OCS Environmental, Inc.
Method 9 VE Inspection Form

Date: 3-19-09
Source: #14 B.F. BAGHOUSE
Observation Start Time: 1100 00
Observation End Time: 1156 45
Observer's Position: SSE OF SOURCE
Distance to source: 200 yds
Direction to source: NNW

Height of source: N/A
Vertical angle to source: 14°

	Start	End
Emissions color:	AS NOTED	SAME
Background:	SKY	
Sky Conditions:	CLEAR	
Wind Speed:	5	
Wind Direction:	NW	
Ambient Temp:	48°	
Relative Humidity%:	54%	
Wet Bulb Temp:		

Plume Type: Attached Detached None

Comments	0	15	30	45			0	15	30	45	Comments
	0	0	0	0	0	30	0	0	0	0	
	0	0	0	0	1	31	0	0	0	0	
	0	0	0	0	2	32	0	0	0	0	
	0	0	0	0	3	33	0	0	0	0	
	0	0	0	0	4	34	0	0	0	0	
	0	0	0	0	5	35	0	0	0	0	
	0	0	0	0	6	36	0	0	0	0	
	0	0	0	0	7	37	0	0	0	0	
	0	0	0	0	8	38	0	0	0	0	
	0	0	0	0	9	39	0	0	0	0	
	0	0	0	0	10	40	0	0	0	0	
	0	0	0	0	11	41	0	0	0	0	
	0	0	0	0	12	42	0	0	0	0	
	0	0	0	0	13	43	0	0	0	0	
	0	0	0	0	14	44	0	0	0	0	
	0	0	0	0	15	45	0	0	0	0	
	0	0	0	0	16	46	0	0	0	0	
	0	0	0	0	17	47	0	0	0	0	
	0	0	0	0	18	48	0	0	0	0	
	0	0	0	0	19	49	0	0	0	0	
	0	0	0	0	20	50	0	0	0	0	
	0	0	0	0	21	51	0	0	0	0	
	0	0	0	0	22	52	0	0	0	0	
	0	0	0	0	23	53	0	0	0	0	
	0	0	0	0	24	54	0	0	0	0	
	0	0	0	0	25	55	0	0	0	0	
	0	0	0	0	26	56	0	0	0	0	END TEST #3
	0	0	0	0	27	57					
	0	0	0	0	28	58					
	0	0	0	0	29	59					

Additional Info (include steam dissipation point)

Observer's Signature: J Johnson

20071107 Method 9 Inspection Form.doc

OCS Environmental, Inc.
Method 9 Source Layout Sketch

Date: 3/19/09

Observer Name: J. Johnson

Begin Time: 0803 00 Time End: 1156 25

No Sun Visible Times

Observation Point

BAGHOUSE STACK

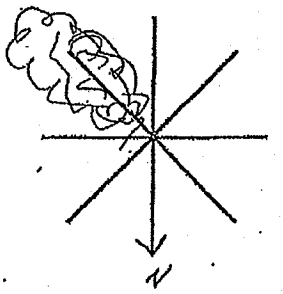

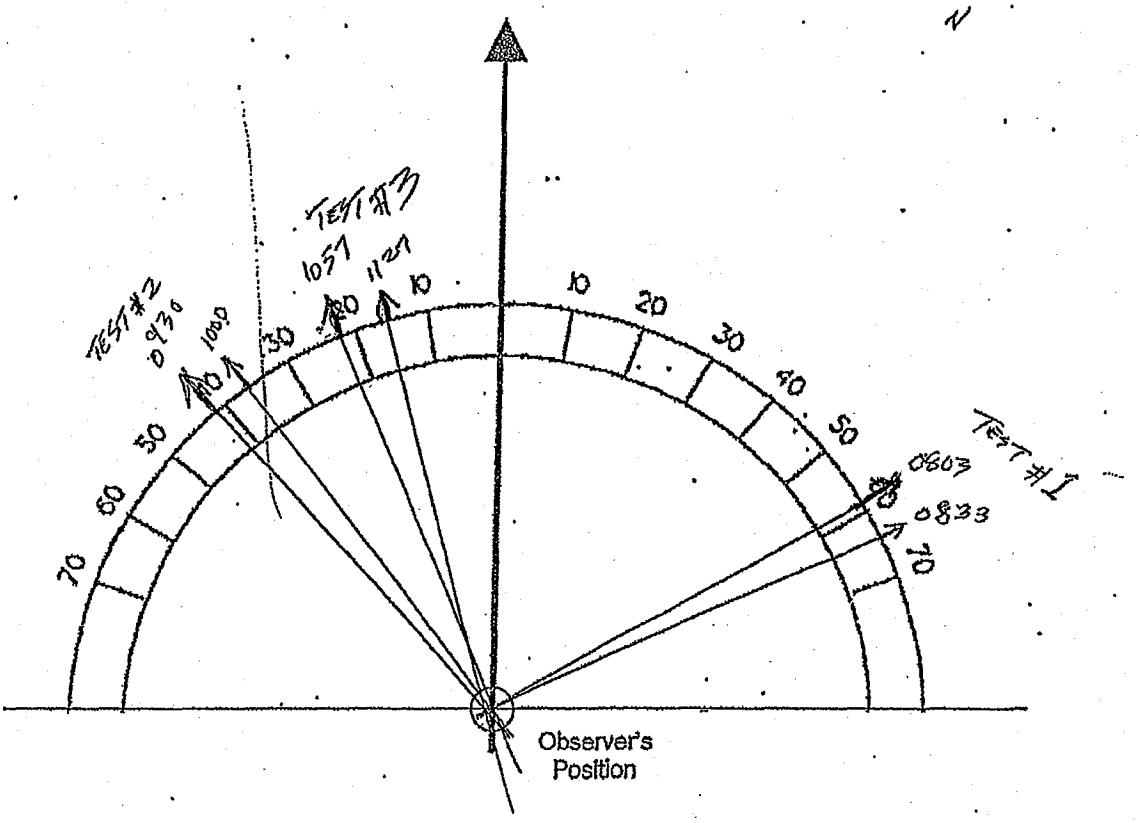

Signature: J. Johnson

20071107 Method 9 Source Layout Sketch.doc

VISIBLE EMISSIONS EVALUATOR

This is to certify that

DANNY WALSH

met the specifications of Federal Reference Method 9 and qualifies as a visible emissions evaluator. Maximum deviation on white and black smoke did not exceed 7.5% opacity and no single error exceeding 15% opacity was incurred during the certification test conducted by Eastern Technical Associates of Raleigh, NC. This certificate is valid for six months from date of issue.

371840
CERT NUMBER

3/11/2009
DATE OF SCHOOL

CHICAGO, IL
SCHOOL LOCATION

9/10/2009
CERTIFICATION EXP DATE

WAL602221
STUDENT ID NUMBER

MANAGER OF TRAINING SERVICES

EASTERN TECHNICAL ASSOCIATES

DANNY WALSH

WAL602221 STUDENT ID NUMBER

met the specifications of Federal Reference Method 9 and qualifies as a visible emissions evaluator. Maximum deviation on white and black smoke did not exceed 7.5% opacity and no single error exceeding 15% opacity was incurred during the certification test conducted by Eastern Technical Associates of Raleigh, NC. This certificate is valid for six months from date of issue and expires on the date below.

CHICAGO, IL	3/11/2009	371840
SCHOOL LOCATION	DATE OF SCHOOL	CERT NUMBER
CHIS08	9/10/2009	
LAST LECTURE	CERTIFICATION EXP DATE	BEARER

Customer Support
Debbie or Sheila
919-878-3188
www.eta-is-opacity.com

VISIBLE EMISSIONS EVALUATOR

This is to certify that

JIMMIE JOHNSON

met the specifications of Federal Reference Method 9 and qualified as a visible emissions evaluator. Maximum deviation on white and black smoke did not exceed 7.5% opacity and no single error exceeding 15% opacity was incurred during the certification test conducted by Eastern Technical Associates of Raleigh, NC. This certificate is valid for six months from date of issue.

371841
CERT NUMBER

3/11/2009
DATE OF SCHOOL

CHICAGO, IL
SCHOOL LOCATION

9/10/2009
CERTIFICATION EXP DATE

JOH676658
STUDENT ID NUMBER

MANAGER OF TRAINING SERVICES

EASTERN TECHNICAL ASSOCIATES

JIMMIE JOHNSON

JOH676658 STUDENT ID NUMBER

met the specifications of Federal Reference Method 9 and qualifies as a visible emissions evaluator. Maximum deviation on white and black smoke did not exceed 7.5% opacity and no single error exceeding 15% opacity was incurred during the certification test conducted by Eastern Technical Associates of Raleigh, NC. This certificate is valid for six months from date of issue and expires on the date below.

CHICAGO, IL	3/11/2009	371841
SCHOOL LOCATION	DATE OF SCHOOL	CERT NUMBER
SPEF08	9/10/2009	
LAST LECTURE	CERTIFICATION EXP DATE	BEARER

Customer Support
Debbie or Sheila
919-878-3188
www.eta-is-opacity.com