JSK 7-

# MEMORANDUM

**TO:** Pat Murphy **DATE:** 9/29/94

**SUBJECT:** Bleeder Stacks

Please find attached current procedures for responding to a bleeder stack known to not be burning properly.

In response to Item 23 of memo dated 9/19/94 stacks are checked daily for proper operation. They are also monitored with TV systems from a combination of the following locations: 1) A.U.D. Control Room Turbo Blower Station. 2) No. 6 Boiler Control Room Turbo Blower Boiler House. 3) Plant Load Dispatcher. These locations are occupied 7 days per week 24 hours per day.

The following additional actions either are being done or have been done to further improve bleeder stack reliability.

1. A new set of upgraded pilots were installed on No. 4 Bleeder Stack during the week of September 11, 1994. They have functioned well to date.

2. A temperature sensing TV type monitoring system has been purchased and is to be received the week of October 3, 1994. It will be installed and tested on No. 4 Bleeder Stack.

3. New "high energy" type pilot igniter control panels are being investigated.

L. G. Michaels

L. G. Michaels

LGM/cw

# SAFE JOB PROCEDURE



**ISSUED:** 08/10/94 **REVIEWED:** **REVISED:** **CODE:** O-29
**JOB:** Reaction to Bleeder Stack Not Burning
**DEPT:** Steam Production

**PROTECTIVE APPAREL:**
Wear approved safety attire.

**NOTE:** When it becomes known that a blast furnace gas bleeder stack is not lit the following action is to be taken immediately:

1. **PROCEDURES:**

A. A.U.D. note time and how it became known that a stack was not lit.

B. Raise the set point on the stack that is not burning and lower set points on stacks that are burning. Attempt to shut off flow through stack that is not burning. Closely monitor burning stack.

C. Announce on the "Hotline" that blast furnace bleeder stack (# of stack) is not burning and that you were either successful or unsuccessful in reducing its flow to zero. L.D. is to acknowledge that he received and understands your announcement.

D. Notify Shift Manager, P.I. on day turn, and 2nd Engineer on off turns that a stack is not burning.

E. Shift Manager and P.I. or 2nd Engineer shall respond immediately to re-light stack.

F. When the stack is re-lit the A.U.D. shall return bleeder stack "set points" to normal.

G. Announce on "Hotline" that the stack is re-lit and the system is back to normal. L.D. shall acknowledge your announcement.

H. If the stack can not be re-lit, and if there is any possibility that raw gas is being vented through any stack the A.U.D. is to re-notify the Load Dispatcher who will check for wind direction and alert the appropriate areas to a possible gas hazard.

**HAZARD/THREAT:** Possible Blast Fce. Gas Plant areas.

**PARTICIPANTS:** 86-352 P. Blakemore 86-516 J. Spates
01-356 A. Stout

Harvey C. Bolds
**SHIFT MANAGER -**

RC Olson
**AREA MANAGER - R.C. OLSON**

**SAFETY ENGINEER**

8/10/94cw

# Blast Furnace Gas Flare Stack Not Lit

**Load Dispatching Response**

**Energy - Environmental Div.**

---

Upon receipt of a report that a blast furnace gas flare stack is not lit. The following actions shall be taken by the load dispatcher:

1) Note the time, identification of caller, area call recieved from, location of stack not lit.
2) Notify Gas Control (AUD) to raise the bleed set point on the stack to a point that will prevent the stack from flaring.
3) Request Gas Control (AUD) dispatch personnel to correct the problem with the stack.
4) Anounce on the 'HOTLINE' blast furnace stack #(number of stack) is not lit.
5) Initiate the Blast Furnace Gas Alert Check List (Form 503A)
6) Document the incident in the load dispatching log book.
7) Gas Control (AUD) shall notify the Load Dispatcher when the flare stack problem has been corrected.
8) Request a copy of the Steam Production Incident Report from the TBBH shift manager.
9) Complete all documentation and file in load dispatching office with copy to Area Manager Utilities Dept.

# 1993 REGULAR BLENDS
# BY TONS

| MATERIAL | BL 10 | BL 1 | BL 2 | BL 4 |
|---|---|---|---|---|
| C–SCRAP C.T. | 31661 | 8237 | 8514 | 7705 |
| C–SCRAP IMS | 31681 | 8237 | 8514 | 5773 |
| C–SLAG | 68981 | 17922 | 20606 | 18641 |
| FINES–ACID PELLET | | | | 2178 |
| FINES–FLUX PELLET | 80445 | 23237 | 24041 | 17388 |
| FINES–MINNTAC PELLET | 35807 | 6977 | 7221 | 6522 |
| FINES–KISH | 17855 | 4647 | 4805 | 6522 |
| FINES–SINTER | 31681 | 10290 | 10643 | 11557 |
| MINED ORE *** | 17367 | 4509 | 4675 | 4227 |
| ORE–ELPAO | 11513 | 2985 | 3095 | 2799 |
| ORE–QCM | | | | 5585 |
| ROLL SCALE–GARY | 44930 | 14610 | 15122 | 5468 |
| ROLL SCALE–LORAIN | 56199 | | | |
| ROLL SCALE–MISC * various sources | | 8766 | 9063 | 8197 |
| SLUDGE–GARY | 59760 | 15529 | 14286 | 14531 |
| TOTAL TONS | 487840 | 125945 | 130584 | 117093 |
| DATE STARTED | 01–01–93 | 05–21–93 | 06–10–93 | 07–23–93 |
| DATE ENDED | 05–17–93 | 07–13–93 | 08–03–93 | 08–24–93 |
| STD. DEV. | 0.49 | 0.59 | 0.62 | 0.69 |
| EXPECT. T.S. | –22.68 | –23.59 | –23.24 | –23.26 |
| ACTUAL T.S. | –20.31 | –19.98 | –21.02 | –22.22 |

USX 7-1a

# 1993 REGULAR BLENDS
# BY TONS

USX 7-1a

| MATERIAL | BL 5 | BL 7 | BL 6 | BL 3 | TOTAL |
|---|---|---|---|---|---|
| C–SCRAP C.T. | 8332 | 8292 | 7669 | 8219 | 88629 |
| C–SCRAP IMS | 6252 | 4146 | 7669 | 6174 | 78425 |
| C–SLAG | 18143 | 26083 | 20392 | 19902 | 210669 |
| FINES–ACID PELLET | 2356 | 7013 | 4321 | | 15868 |
| FINES–FLUX PELLET | 21163 | 21054 | 21632 | 23215 | 232174 |
| FINES–MINNTAC PELLET | | | | 6964 | 63493 |
| FINES–KISH | 7054 | 11703 | 8656 | 6964 | 68207 |
| FINES–SINTER | 12492 | 4146 | 7669 | 12335 | 100792 |
| MINED ORE ** | 4573 | 4543 | 4201 | 4505 | 48600 |
| ORE–ELPAO Venezuela | 3020 | 3014 | 2787 | 2987 | 32199 |
| ORE–QCM Canada | 12091 | 15041 | 13910 | | 46628 |
| ROLL SCALE–GARY | 8871 | 11762 | 10883 | 11670 | 123316 |
| ROLL SCALE LORAIN | | | | | 56199 |
| ROLL SCALE–MISC Various * sources | | | | 8759 | 34784 |
| SLUDGE–GARY | 13971 | 13909 | 12843 | 13791 | 158620 |
| FINES–CONTAM SINTER | | 9366 | 4321 | | 13687 |
| TUBE CITY BOAT Kish Scrap | | 4675 | 4321 | | 8996 |
| C–SCRAP FRITZ | 2280 | 2279 | 2094 | | 6653 |
| MISC SCALE SCRAP | 4699 | | | | 4699 |
| | | | | | |
| TOTAL TONS | 125297 | 147027 | 133367 | 125485 | 1392638 |
| DATE STARTED | 08–27–93 | 10–22–93 | 09–16–93 | 07–16–93 | |
| DATE ENDED | 10–08–93 | 12–06–93 | 12–24–93 | 01–16–94 | |
| STD. DEV. | 0.65 | 0.43 | 0.44 | 0.73 | |
| EXPECT. T.S. | –22.66 | –20.36 | –20.99 | –23.47 | |
| ACTUAL T.S. | –16.50 | –17.15 | –16.10 | –22.54 | |

* Tube City
National Material
AZCON Material

** Mined ore is a designation given to plant clean up from ore yard – Blend Area Roadways

# REVERT MATERIALS IN BLENDS
# BY YEAR

| MATERIAL | 1989 | 1990 | 1991 | 1992 | 1993 | TOTAL |
|---|---|---|---|---|---|---|
| C–SCRAP DEFASCO | 48998 | 32805 | | 12886 | | 94689 |
| FINES–DELMORE | 32822 | 55220 | 18095 | | | 106137 |
| MISC SCALE SCRAP various *** | | | | | 4699 | 4699 |
| PELLET FINES–BLUM | | | 12265 | | | 12265 |
| PELLET FINES–GRANITE CITY | | | 3040 | 37990 | | 41030 |
| PELLET FINES–MINNTAC | 30492 | 38952 | 26348 | 3622 | 63493 | 162907 |
| PELLET FINES–MISC ** | 14371 | | | | | 14371 |
| ROLL SCALE–LORAIN | 32875 | | | 30250 | 56199 | 119324 |
| ROLL SCALE–MISC * | 121533 | 126584 | 21511 | | 34784 | 304412 |
| SCRAP–RESERVE IRON | 2298 | | | | | 2298 |
| SLUDGE–DEFASCO | | 4343 | 3730 | 7445 | | 15518 |
| SLUDGE–LORAIN | 7478 | | | | | 7478 |
| TUBE CITY BOAT - Rish Scrap | | | | | 8996 | 8996 |
| | | | | | | |

* Tubecity, Azcon, National Material

** Delmore, Koch Carbon, National Material,

*** Bethlehem, Inland, Reserve Iron, LTV, Acme etc.

USX 7-1b

NO.3 SINTER PLANT
REVERT MATERIAL GUIDELINES
SEPTEMBER 27, 1994

| Example Material | Guide Line | FeO | Fe | P | Mn | SiO2 | Al203 | CaO | MgO | Sul | C | Cu | Ni | Zn | Cr | K20 | Na20 | Cl |
|---|---|---|---|---|---|---|---|---|---|---|---|---|---|---|---|---|---|---|
| Sludge | PASS | | | | | | | | | | | | | | | | | |
| | FAIL | | | | | | | | | | | | | | | | | |
| Mill Scale | PASS | | | | | | | | | | | | | | | | | |
| | FAIL | | | | | | | | | | | | | | | | | |
| Misc Scrap | PASS | | | | | | | | | | | | | | | | | |
| | FAIL | | | | | | | | | | | | | | | | | |
| Kish Scrap | PASS | | | | | | | | | | | | | | | | | |
| | FAIL | | | | | | | | | | | | | | | | | |
| Misc Fines | PASS | | | | | | | | | | | | | | | | | |
| | FAIL | | | | | | | | | | | | | | | | | |
| Pellet Fines | PASS | | | | | | | | | | | | | | | | | |
| | FAIL | | | | | | | | | | | | | | | | | |

USX 7-2

I

## *Chemical Composition of Gary No. 3 Sinter Plant Feed Materials*
*(wt%, dry basis)*

| | Pellet Screen-ings | El Paso Fines | Sinter Screen-ings | Ore-Yard Clean-Up | BF Sludge | BF Sludge (HC) | Kish Fines | Fritz Scrap | CT C-Scrap | IMS C-Scrap | C-Slag | Mill Scale | Mill Scale (HC) |
|---|---|---|---|---|---|---|---|---|---|---|---|---|---|
| $Fe_T$ | 63.66 | 63.26 | 47.32 | 42.26 | 30.73 | 28.73 | 25.45 | 15.94 | 17.80 | 22.90 | 18.19 | 72.30 | 72.50 |
| $Fe^o$ | ND | ND | ND | ND | 1.26 | 0.88 | 10.43 | ND | 1.52 | 1.40 | 1.23 | 0.63 | 0.73 |
| FeO | 0.87 | 0.36 | 9.72 | 12.35 | 6.47 | 7.03 | 8.27 | 13.15 | 10.08 | 11.38 | 10.05 | 56.66 | 56.24 |
| $Fe_2O_3$ | 90.05 | 90.05 | 56.86 | 46.70 | 34.95 | 32.01 | 12.28 | 8.18 | 12.07 | 18.09 | 13.08 | 39.50 | 40.11 |
| Mn | 0.08 | 0.33 | 1.15 | 0.94 | 0.67 | 0.59 | 1.84 | 0.89 | 3.11 | 3.09 | 3.21 | 0.52 | 0.52 |
| $SiO_2$ | 4.32 | 5.99 | 7.98 | 11.04 | 7.27 | 8.09 | 23.04 | 44.43 | 9.57 | 10.28 | 11.24 | 1.01 | 0.77 |
| $Al_2O_3$ | 0.16 | 1.31 | 1.70 | 2.11 | 1.74 | 1.76 | 3.53 | 4.64 | 2.53 | 3.27 | 6.12 | 0.17 | 0.05 |
| CaO | 3.80 | 0.03 | 16.64 | 12.23 | 9.12 | 9.45 | 29.24 | 16.11 | 41.44 | 38.98 | 39.84 | 1.04 | 0.59 |
| MgO | 1.08 | 0.07 | 3.97 | 2.57 | 2.10 | 2.34 | 9.08 | 5.52 | 8.90 | 10.29 | 10.69 | <0.01 | <0.01 |
| $TiO_2$ | 0.02 | 0.13 | 0.14 | 0.18 | ND | ND | 0.25 | 0.20 | 0.31 | 0.32 | 0.37 | ND | ND |
| $Na_2O$ | 0.013 | <0.002 | 0.009 | 0.034 | 0.056 | 0.052 | 0.036 | 0.058 | 0.003 | 0.002 | 0.015 | <0.002 | 0.004 |
| $K_2O$ | 0.056 | 0.068 | 0.091 | 0.190 | 0.110 | 0.093 | 0.410 | 1.070 | 0.061 | 0.055 | 0.094 | 0.033 | 0.032 |
| P | 0.007 | 0.029 | 0.131 | 0.087 | 0.070 | 0.065 | 0.227 | 0.083 | 0.463 | 0.406 | 0.371 | 0.027 | 0.026 |
| S | 0.011 | 0.012 | 0.071 | 0.250 | 0.64 | 0.64 | 1.03 | 0.680 | 0.088 | 0.068 | 0.078 | 0.04 | 0.03 |
| C | 0.20 | 0.14 | 0.54 | 8.83 | 33.45 | 34.46 | 2.26 | 3.12 | 0.65 | 0.32 | 0.58 | 0.59 | 0.58 |
| Cr | 0.14 | 0.23 | 0.20 | 0.31 | 0.12 | 0.12 | 0.19 | 0.22 | 0.25 | 0.27 | 0.27 | 0.23 | 0.23 |
| Zn | <0.002 | <0.002 | 0.033 | 0.074 | 0.490 | 0.420 | 0.008 | 0.049 | 0.009 | 0.008 | 0.009 | 0. | |
| Pb | 0.006 | 0.006 | 0.022 | 0.037 | 0.024 | 0.027 | 0.057 | 0.089 | 0.050 | 0.051 | 0.060 | 0. | |
| Cl | 0.006 | 0.013 | 0.009 | 0.024 | 0.14 | 0.01 | 0.009 | 0.007 | 0.008 | 0.011 | 0.010 | 0. | |
| Oil | ND | ND | ND | ND | 0.16 | 0.23 | 0.02 | ND | <0.001 | <0.001 | <0.001 | 0. | |
| LOI | -0.42 | -1.96 | 0.90 | -11.55 | -36.82 | -36.08 | 0.76 | -4.99 | -7.60 | -1.29 | -2.34 | 5. | |



LISX 7-6

II

MOSTARDI-PLATT ASSOCIATES, INC.

# 8.0 RESULTS SUMMARY TABLES

USX CORPORATION
Sinter Plant No. 3
Line No. 1
Total Recoverable Petroleum Hydrocarbons
Test Results Summary

| Test No. | Date | Test Location | lbs/hr | | |
|---|---|---|---|---|---|
| | | | Front | Back 120°F | Back 32°F |
| 1 | 04/09/92 | ESP inlet | 16.24 | 5.77 | 4.39 |
| 2 | 04/10/92 | ESP inlet | 14.07 | 4.22 | 0.83 |
| 1 | 04/09/92 | EDV inlet | 6.53 | 7.98 | 1.74 |
| 2 | 04/10/92 | EDV inlet | 10.35 | ≤0.74 | 1.77 |
| 1 | 04/09/92 | Stack | 8.50 | N/A | 11.90 |
| 2 | 04/10/92 | Stack | 7.44 | N/A | 15.41 |

111

## *Table IV*

### *Oil Content of Waste Gas of No. 1 Line of Gary Sinter Plant*

| Location & Date | Waste Gas Composition, lb/hr | | | | |
|---|---|---|---|---|---|
| | Front-Half Catch | | Back-Half Catch | | |
| | | | Oil, Condensed at Given Temperature | | Oil, Total Back-Half |
| | Particulate | Oil | 120°F | 32°F | |
| **ESP Inlet** | | | | | |
| 04/09/92 | 409 | 16<br>(21)* | 6<br>-- | 4<br>-- | 10<br>-- |
| 04/10/92 | 437 | 14 | 4 | 1 | 5 |
| **EDV Inlet** | | | | | |
| 04/09/92 | 220 | 6<br>(17)* | 8<br>-- | 2<br>-- | 10<br>-- |
| 04/10/92 | 346 | 10 | 1 | 2 | 3 |
| **Stack** | | | | | |
| 04/09/92 | 112 | 8<br>(18)* | ND**<br>-- | 12<br>-- | 12<br>-- |
| 04/10/92 | 113 | 7 | ND | 15 | 15 |

Analysis performed by Mostardi-Platt Assoc., except as noted.

Oil content of feed mix at roll feeder - 04/09/92: 184 lb/hr
04/10/92: 195 lb/hr

* Separate filter analyzed by UEC lab.
\+ ND: Not determined.

IV

*Table V*

***Oil Content of Waste Gas at ESP Inlet - No. 1 Line - Gary Sinter Plant***

| | 4/9/92 | 4/10/92 | 7/10/92 | |
|---|---|---|---|---|
| | Test 1 | Test 2 | Test 1 | Test 2 |
| ***Test Conditions*** | | | | |
| Avg. Gas Flow Rate, DSCFM | 228,988 | 218,537 | 207,432 | 208,104 |
| Gas Temperature, °F | 286 | 283 | 264 | 262 |
| Gas Sample Volume, DSCF | 53.4 | 36.7 | 151.8 | 151.1 |
| ***Sinter Plant Oil Balance*** | | | | |
| ***Input, lb/hr*** | | | | |
| Feed Mix at Roll Feeder | 184 | 195 | 144 | 180 |
| ***Output, lb/hr*** | | | | |
| Front Half | | | | |
| Collected at 270°F | 16.2 | 14.1 | 1.7 | 2.0 |
| Back Half | | | | |
| Collected at 120°F | 5.8 | 4.2 | 16.2 | 25.6 |
| Collected at 32°F | 4.4 | 1.0 | 1.2 | 0.8 |
| Total Back Half | 10.2 | 5.2 | 17.4 | 26.4 |
| Total Output | | | | |
| Front and Back Halves | 26.4 | 19.3 | 19.1 | 28.4 |
| ***Output vs Input*** | | | | |
| Output as % of Input | 14.3 | 9.9 | 10.6 | 15.8 |

Waste gas analysis by Mostardi Platt, Inc. using EPA Method No. 25 Procedure.

# OIL CONTENT OF E.D.V. WATER AND PARTICULATES

| | TREATED WATER* TO E.D.V. | | BLOWDOWN WATER* FROM E.D.V. | |
|---|---|---|---|---|
| | % | LBS/HOUR | % | LBS/HOUR |
| OIL | <0.002 | 15.9 | <0.002 | 15.9 |

* ANALYSIS 4/19/92 REFERENCE 9208-0087

# OIL CONTENT OF SOLID PARTICULATES IN BLOWDOWN WATER

| BLOWDOWN FROM E.D.V. SATURATORS NO. 3 & 4 | | |
|---|---|---|
| | % | LBS/HOUR |
| OIL | 1.31 | 2.2 |

* PARTICULATES REMOVED WAS 168 LBS/HOUR DURING STACK TEST 1/4/91

LISX 7-7

*** PURCHASE ORDER REMOTE COPY ***

US STEEL GROUP

PAGE 1 /CONT/

PREFIX

07/21/94 161-0724613- 000

F.O.B.: DELIVERED

TERMS: NET 15 DAYS

TAX:

DELIVERY: 04/18/94

OUR ORDER NUMBER AND
RELEASE MUST BE SHOWN
ON BILL OF LADING

BULK TRADING & TRANSPORT CO
1375 EAST 9TH STREET
SUITE 610
CLEVELAND, OH 44114
PH: (216) 621-7177

MAIL INVOICE TO:
**
** SEE BODY OF ORDER FOR INVOICE MAILIN
** INSTRUCTIONS
**

STATE TAX: EXEMPT TAX CODE:

USX 7-8

| ITEM DESCRIPTION | ITEM | QUANTITY | | PRICE |
|---|---|---|---|---|
| *** FOR INFORMATION CONCERNING ORDER SPECIFICATIONS, PLEASE CALL GUSTAFSON AT (219) 8 | | | | |
| FURNISH UP TO 500000 GALS OF FRONT END OIL TO BE DELIVERED TO USS GARY WORKS AS RELEASED BY AUTHORIZED GARY WORKS PERSONNEL | 01 | 500000 | GAL | .45 GAL |

VENDOR WARRANTS THAT ALL OF THE FUEL
OIL PURCHASED BY USX CORPORATION
UNDER THE TERMS AND CONDITIONS OF THIS
PURCHASE ORDER MEET THE FOLLOWING
SPECIFICATIONS IN ADDITION TO ALL REQUIRMENTS
OF ON SPECIFICATION FUEL OIL AS
DEFINED BY FEDERAL, STATE & LOCAL REGULATIONS

| | |
|---|---|
| FLASH POINT | 150 F (MIN) |
| WATER (%VOLUME) | 1% (MAX) |
| HALOGENS | 1000 PPM (MAX) |
| ARSENIC | 5 PPM (MAX) |
| CADMIUM | 2 PPM (MAX) |
| CHROMIUM | 10 PPM (MAX) |
| LEAD | 100 PPM (MAX) |

METAL WORKING
LUBRICANTS
INDY

| ITEM DESCRIPTION | | ITEM | QUANTITY | PRICE |
|---|---|---|---|---|
| SULFUR (% WEIGHT) | 1% (MAX) | | | |
| PCB'S | 0 PPM (MAX) | | | |
| MERCURY | 0 PPM (MAX) | | | |
| SODIUM | 100 PPM (MAX) | | | |
| VANADIUM | 100 PPM (MAX) | | | |
| ZINC | 100 PPM (MAX) | | | |

FOR THE PURPOSES OF THIS PURCHASE ORDER,
A. B. CONSULTING TESTING RESULTS
ARE BINDING AND CONCLUSIVE.

.
EXPRESS ENVIRONMENTAL WARRANTIES
VENDOR WARRANTS THAT ALL OF THE FUEL
OIL PURCHASED BY USX CORPORATION
UNDER THE TERMS OF THIS PURCHASE ORDER
CONTAINS NO HAZARDOUS WASTES, AS THAT TERM IS
DEFINED IN THE RESOURCE CONSERVATION AND

RECOVERY ACT, 42 USC SECTION 6901 ET SEQ., OR
ANY HAZARDOUS SUBSTANCES, AS THAT TERM IS
DEFINED IN THE COMPREHENSIVE ENVIRONMENTAL
RESPONSE, COMPENSATION AND LIABILITY ACT, 42
USC SECTION 9601 ET SEQ. VENDOR WARRANTS
THAT NONE OF THE FUEL OIL
PURCHASED BY USX CORPORATION FROM VENDOR
CONTAINS ANY MATERIALS THAT WILL GIVE RISE TO
ANY ENVIRONMENTAL LIABILITY UNDER ANY FEDERAL
STATE OR LOCAL ENVIRONMENTAL LAW, REGULATION

OR ORDINANCE. THESE WARRANTIES ARE MADE IN
ADDITION TO ALL OTHER WARRANTIES AND ARE
INTENDED TO BE CUMULATIVE AND NON-EXCLUSIVE.

.
ENVIRONMENTAL INDEMNIFICATION
VENDOR FOR ITSELF, ITS SUCCESSORS AND ASSIGNS
AGREES TO DEFEND, INDEMNIFY AND HOLD HARMLESS
USX CORPORATION, ITS AGENTS, SERVANTS AND
EMPLOYEES FROM AND AGAINST ANY AND ALL CLAIMS
DEMANDS, DAMAGES, ACTIONS OR CAUSES OF ACTION

| ITEM DESCRIPTION | ITEM | QUANTITY | PRICE |
|---|---|---|---|

AT LAW OR EQUITY, TOGETHER WITH ALL LOSSES, COSTS, EXPENSES AND ATTORNEY'S FEES ARISING FROM ANY PURCHASED FUEL OIL, WHETHER DUE TO PURCHASER'S NEGLIGENCE OR OTHERWISE, OR IN CONNECTION WITH ANY ENVIRONMENTAL LIABILITY UNDER ANY FEDERAL, STATE OR LOCAL ENVIRONMENTAL LAW, REGULATION OR ORDINANCE.

A MATERIAL SAFETY DATA SHEET ON THE MATERIAL SUPPLIED UNDER THIS PURCHASE ORDER MUST BE RECEIVED AT THE FOLLOWING ADDRESS WITHIN 7 DAYS OF RECEIPT OF THIS PURCHASE ORDER:
USS GARY WORKS
ATTN: JOHN JANSEN, MAIL STATION NO. 29
1 NO. BROADWAY
GARY, INDIANA 46402
AN MSDS SHEET MUST BE SUPPLIED FOR EACH NEW ORDER WITHOUT EXCEPTION!!!!!!

ALL INVOICES RELATING TO THIS PURCHASE ORDER SHOULD BE SENT TO THE FOLLOWING ADDRESS:
USS GARY WORKS
1 NO. BROADWAY
ATTN: ACCOUNTS PAYABLE
MAIL STATION: 91-D-9
GARY, INDIANA 46402

ONLY ONE INVOICE PER WEEK SHALL BE SUBMITTED AGAINST THIS PURCHASE ORDER.

SELLER WILL PROVIDE TO THE USING LOCATION'S SAFETY AND INDUSTRIAL HYGIENE DEPARTMENT, A COPY OF THE MATERIAL SAFETY DATA SHEET (MSDS) FOR ALL HAZARDOUS SUBSTANCES SOLD BY THE SELLER TO U. S. STEEL. THE EXCEPTION TO THIS ARE THOSE ITEMS AND CERTAIN SUBSTANCES THAT DO NOT REQUIRE AN MSDS SHEET AS DEFINED BY

| ITEM DESCRIPTION | ITEM | QUANTITY | PRICE |
|---|---|---|---|

THE OCCUPATIONAL SAFETY AND HEALTH
ADMINISTRATION (OSHA) COMMUNICATION STANDARD.
THE MSDS WILL CONTAIN THE INFORMATION

REQUIRED BY THE OSHA STANDARD AS SET FORTH IN
29 CFR 1910.1200 (G) (2). AN MSDS SHEET WILL
BE FORWARDED TO EACH USING LOCATION WITH THE
FIRST SHIPMENT OF THE SUBSTANCE TO THAT
LOCATION. WHEN THE MSDS IS REVISED, A COPY
WILL BE PROVIDED WITH THE FIRST SHIPMENT
AFTER EACH REVISION.

** USS PURCHASING SUPPLIER QUALITY PROCESS ** ALL SUPPLIERS OF PURCHASED PRODUCTS/SERVICES TO ANY USS FACILITY MUST MEET QUALITY SYSTEM REQUIREMENTS WITH QUALITY CONTROL PROCEDURES AS REQUIRED BY USS PURCHASING "GUIDELINES FOR A SUPPLIER QUALITY MANAGEMENT SYSTEM." UPON RECEIPT OF A QUALITY SURVEY REPORT, SELLER MUST RESPOND WITHIN FORTY-FIVE (45) DAYS WITH A PLAN FOR CORRECTIVE ACTION THAT IDENTIFIES STEPS THAT WILL BE TAKEN.

SHIP TO:
U.S.STEEL
GARY WORKS
1 NORTH BUCHANAN
GARY INDIANA 46402
DELV TO 229

(161-0724613- - )
PHONE 4464

R. D. CERMINARO, C.P.M.
ROOM 431 600 GRANT ST.
PITTSBURGH, PA 15219-2749
PHONE (412) 433-2450

**Oil suppliers for 1992, 1993, and 1994:**

Allied (Ashland)
American Energy
Ameropan
Apex
Ark Petroleum

Beaver
Breslube
Bulk Trading and Transport

Corundol

DISC Environmental

Ecogard
ES & R

Heritage

Koppers

Marathon
Metalworking Lubricants
Montgomery Tank Lines

Oil Tec

Refuel

Summit

Thompson
Torco

Usher

SOP# 94-102

TO: ALL TRUCK DRIVERS

SUBJECT: UNLOADING PROCEDURE FOR LIQUIDS INTO THE 4 MILLION GALLON TANK LOCATED NORTH OF Q-BOP AND #2 CASTER

L1SX 7-9

1. The truck driver will proceed to the unloading station office via the current established route.

2. The driver will report to the fuel technician in the office, present any paperwork, and receive an assigned unloading station and any required information.

3. Sample will be taken following Standard Operating Procedure (SOP) for test station.

4. The driver will then proceed to the assigned unloading station where the truck will be secured using brakes and wheel chocks.

5. The unloading hose will first be attached securely to the unloading station nipple, placing bucket under connection.

6. The unloading hose will next be securely fastened to the truck unloading pump, placing bucket under connection.

7. Open the valve on the unloading station nipple first and open the valve on the unloading truck last.

8. The truck driver WILL STAY with the vehicle during the entire unloading process and will be alert for any leakage or spillage from the truck, hose, or unloading station. Buckets are available at the unloading station office for any leakage which amy occur.

9. When the unloading is completed the driver will close the unloading station valve first and place the end of the unloading hose in the overflow drain pipe. The truck valve will then be closed. ALL liquid will be drained from the hose before disconnecting from the truck. After disconnecting, the hose will be coiled toward the overflow drain pipe to allow any remaining liquid to flow out. The driver will then empty the bucket (if used) in the overflow and spread coke breeze over any stray fuel which may have hit the ground.

NOTE: The procedure outlined in STEP 9 is a minimum requirement. If your truck configuration allows for steam cleaning after unloading, you are urged to steam clean. If your pump motor will reverse to suck liquid back into the truck you should consider this.

10. When unloading is completed and the area is squared away the driver must report back to the fuel technician and procure the required paperwork.

11. Fuel Tech will go with the driver to assigned bay and inspect area for spills and check screens, if bay is OK, return paperwork and driver may leave. If a problem, dirty screens, Complete Screen Report. If spill on ground, CALL Jansen and have driver clean area AFTER talking with Jansen.

12. In the event that a spill should occur sometime during your unloading you are to contact the fuel technician IMMEDIATELY.

2610300SOP BULK OIL FACILITY LOADING THE OIL TANK
ISSUE: 08-04-94 REVIEW: REVISE:

OPERATION
1.0 Loading the tank with the proper types of oil and in the proper amounts to insure against running out of material.

METHOD
1.1 The material for the tank will be purchased in bulk through the auspices of purchasing with the needed input from the manager of the bulk oil facility. The facility manager must converse daily with purchasing to know about available oil and the current pricing.

STANDARD
1.2 The facility manager must be sure to stay within both price guidelines and environmental guidelines.

PROCEDURE
1.3 The oil tank will be loaded to accomodate the blast furnaces which are injecting oil at that time. The facility manager will check daily to see the injection rates and working with purchasing, will bring in enough oil to cover the oil necessary and handle any rise in the injection rates. The facility manager and purchasing will contact the oil vendors and tell them what to bring in and in what quantities.

MEASUREMENT
1.4 The oil tank will be measured daily by the contractor that is charged with the responsibility of counting trucks and tracking the tank level.

REPORTING
1.5 The tank levels and trucks unloaded will be recorded in the log book and recorded in the " daily bulk storage check list". This check list will then be forwarded to the facility manager.

REASON
1.6 The tank must be kept at a level commensurate with the amount of oil being injected on the furnace line. If this is not done the tank could go dry and the furnaces will go cold and make poor quality metal. The coke rate will increase and the cost will increase.

CORRECTIVE ACTION
1.7 The action to take is to get the oil suppliers to bring in more oil and get some oil in the tank in the quantity needed to supply oil to the furnaces.

SEVERITY
1.8 Level 1 if the furnaces are burdened for the oil.

APPROVALS

Area Manager Operations Jerry Perkins Jerry Perkins

Quality Engineer Robert Ahlheit

# USX: BLAST FURNACE RECYCLE
# NALCO CORPORATE LAB DATA

BLAST FURNACE RECYCLE COLD WELL CHEMISTRY

| AREA DATE | MONTH | CONTAMINANT (PPM) SODIUM (CaCO3) | CALCIUM (CaCO3) | MAGNESIUM (CaCO3) | ZINC (Zn) | AMMONIA (NH3) | ALKALINITY (CaCO3) | CHLORIDE (Cl) | SULFATE (SO4) | pH | CONDUCTIVITY (UMHOS) |
|---|---|---|---|---|---|---|---|---|---|---|---|
| BFR COLD WELL | | | | | | | | | | | |
| 1-12-93 | J12-93 | 630 | 2000 | 620 | 7 | 408 | 107 | 1775 | 1632 | 6.6 | 7790 |
| 2-8-93 | FB | 790 | 1500 | 450 | 0 | 442 | 255 | 1917 | 1824 | 7.5 | 8970 |
| 3-11-93 | M11 | 760 | 1400 | 460 | 0 | 374 | 171 | 1846 | 1536 | 7.3 | 8640 |
| 4-12-93 | A12 | 660 | 2100 | 570 | 7.5 | 374 | 125 | 2201 | 1920 | 6.7 | 9290 |
| 5-14-93 | M14 | 590 | 2200 | 650 | 0.7 | 612 | 264 | 2627 | 1920 | 7.1 | 10000 |
| 6-2-93 | J2 | 790 | 2100 | 710 | 0 | 442 | 682 | 1536 | 2130 | 7.4 | 8620 |
| 7-19-93 | J19 | 770 | 1970 | 560 | 0 | 480 | 260 | 1487 | 2100 | 7.4 | 7200 |
| 8-11-93 | A11 | 340 | 1600 | 610 | 1.3 | 248 | 203 | 1633 | 1344 | 7.6 | 6950 |
| 9-20-93 | S20 | 350 | 2120 | 590 | 0 | 460 | 242 | 2231 | 1864 | 7.4 | 11300 |
| 10-20-93 | O20 | 800 | 2300 | 610 | 0.7 | 374 | 460 | 2617 | 2200 | 7.4 | 10000 |
| 11-22-93 | N22 | 660 | 1920 | 530 | 0.8 | 480 | 370 | 2200 | 1900 | 7.4 | 12000 |
| 12-10-93 | D10 | 630 | 2520 | 620 | 1 | 440 | 310 | 1858 | 1834 | 7.4 | 10270 |
| 1-26-94 | J26-94 | 350 | 1700 | 640 | 4 | 680 | 247 | 2130 | 1632 | 7.2 | 10500 |
| 2-11-94 | F11 | 340 | 2400 | 720 | | 620 | 152 | 2600 | 1900 | 7.4 | 14000 |
| 3-22-94 | M22 | 740 | 3000 | 860 | 12 | 612 | 213 | 3408 | 2304 | 7.3 | 13300 |
| 4-11-94 | A11 | 340 | 2700 | 670 | 0 | 408 | 318 | 2485 | 1536 | 7.2 | 10300 |
| 5-19-94 | M19 | 350 | 2700 | 640 | 0 | 410 | 390 | 2676 | 1879 | 7.6 | 13300 |
| 6-29-94 | J29 | 500 | 3000 | 790 | 0 | 544 | 282 | 3408 | 2112 | 7.1 | 12500 |
| 7-22-94 | J19 | 440 | 2800 | 650 | 8 | 442 | 266 | 2911 | 1728 | 7.2 | 10900 |
| 8-31-94 | A31 | 380 | 2400 | 610 | 0 | 544 | 386 | 2556 | 1400 | 7.3 | 10200 |

USX 7-10

# Blast Furnace Recycle
# Total Suspended Solids

*Monthly Averages*

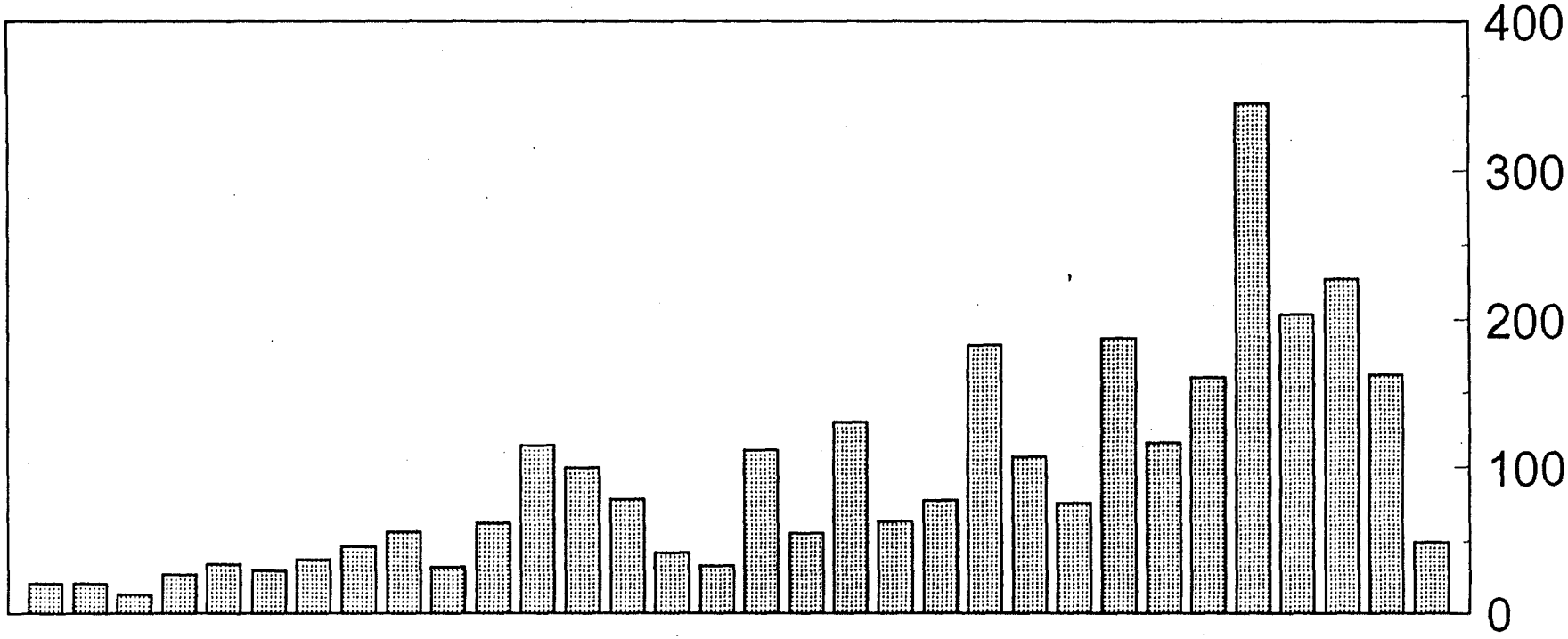


| | Jul | Aug | May | Jul | Dec | Jan | Mar | Apr | May | Jun | Jul | Aug | Sep | Oct | Dec | Feb | May | Jun | Jul | Aug | Sep | Oct | Nov | Dec | Jan | Feb | Mar | Apr | May | Jun | Jul | Aug |
|---|---|---|---|---|---|---|---|---|---|---|---|---|---|---|---|---|---|---|---|---|---|---|---|---|---|---|---|---|---|---|---|---|
| TSS | 21 | 21 | 13 | 27 | 34 | 30 | 37 | 46 | 56 | 32 | 62 | 114 | 99 | 78 | 42 | 33 | 111 | 55 | 130 | 63 | 77 | 182 | 106 | 75 | 187 | 116 | 160 | 345 | 203 | 227 | 162 | 49 |

1990 1991 1992 1993 1994 8/1 - 8/18

# Blast Furnace Recycle
# Total Suspended Solids - Influent

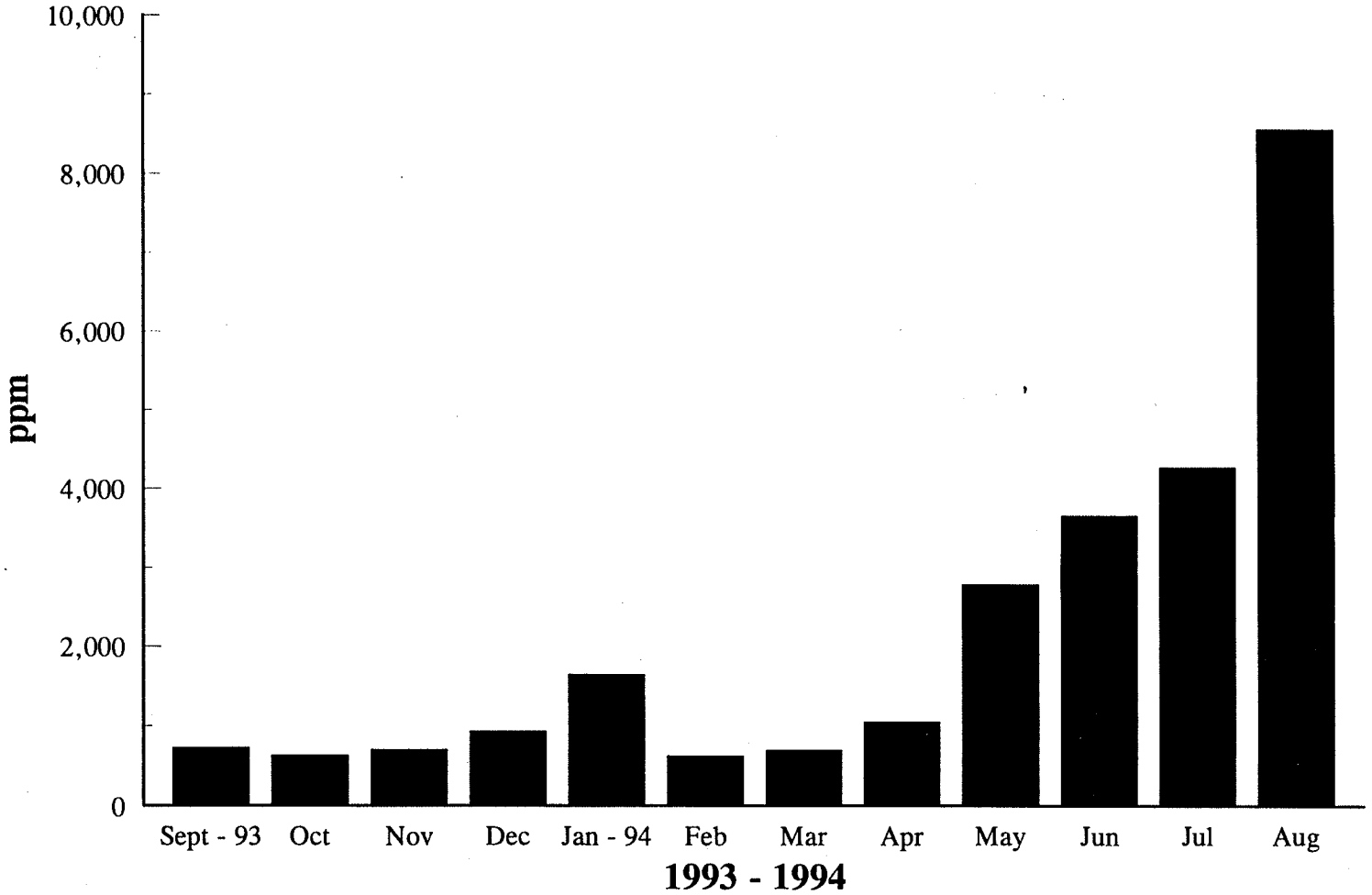


BFRTSS.pre : jah

October 3, 1994

Pat Murphy
Environmental Compliance

OK - 7-11

Subject: **NEIC Questions for Sintering and Blast Furnaces**

***Request No. 11.***

I have included 12 months of the data requested. This is the only data available and needs explanation.

The item labeled surplus COG production is the COG metered downstream of the Coke Plant. It includes the flow to the Coke Plant Boiler House, the 48" Main and the 36" main as well as the High Pressure Bleeder Flow. The quantity does not include Coke Oven Underfiring.

The item labeled BFG used in boilers is the quantity measured to No. 4 Boiler House and to the Turbo-Blower Boiler House.

The BFG Flare stacks are measured by taking a pressure drop across the flare stacks.

LSK - 7-11

| | SURPLUS COG PRODUCTION MCF | COG HIGH PRESS. FLARE MCF | BFG used in BOILERS MCF | BFG FLARED #1 Stack MCF | BFG FLARED #2 Stack MCF | BFG FLARED #4 Stack MCF | BFG FLARED TOTAL MCF |
|---|---|---|---|---|---|---|---|
| 10/1/93 | 51338 | 1095 | 565395 | 77259 | 3621 | 63343 | 144223 |
| 10/2/93 | 59991 | 996 | 523775 | 57846 | 3634 | 46537 | 108017 |
| 10/3/93 | 56301 | 307 | 544190 | 94038 | 22978 | 61980 | 178996 |
| 10/4/93 | 58938 | 1652 | 591926 | 96663 | 16319 | 67487 | 180469 |
| 10/5/93 | 61085 | 1231 | 534577 | 76000 | 13859 | 54420 | 144279 |
| 10/6/93 | 59942 | 506 | 347177 | 11193 | 1497 | 2374 | 15064 |
| 10/7/93 | 59445 | 1184 | 432725 | 19098 | 4157 | 19696 | 42951 |
| 10/8/93 | 58677 | 512 | 546551 | 64532 | 12887 | 56977 | 134396 |
| 10/9/93 | 63363 | 4061 | 602761 | 53073 | 9585 | 54802 | 117460 |
| 10/10/93 | 59821 | 1899 | 549929 | 85264 | 60158 | 80280 | 225702 |
| 10/11/93 | 58695 | 2868 | 646996 | 33388 | 11262 | 59077 | 103727 |
| 10/12/93 | 61540 | 5146 | 504081 | 24150 | 13247 | 61826 | 99223 |
| 10/13/93 | 62489 | 3184 | 605221 | 45184 | 11481 | 59205 | 115870 |
| 10/14/93 | 59473 | 533 | 471637 | 29013 | 3443 | 45128 | 77584 |
| 10/15/93 | 58940 | 1353 | 585557 | 73646 | 25273 | 74550 | 173469 |
| 10/16/93 | 58674 | 113 | 501459 | 63923 | 40496 | 73916 | 178335 |
| 10/17/93 | 58443 | 337 | 511869 | 90997 | 60409 | 94330 | 245736 |
| 10/18/93 | 57018 | 411 | 568466 | 91171 | 15348 | 67964 | 174483 |
| 10/19/93 | 56960 | 154 | 502778 | 73900 | 6330 | 37357 | 117587 |
| 10/20/93 | 55592 | 30 | 548365 | 69467 | 17418 | 52024 | 138909 |
| 10/21/93 | 55774 | 99 | 578231 | 15874 | 2782 | 46381 | 65037 |
| 10/22/93 | 57393 | 511 | 562949 | 34602 | 6564 | 58955 | 100121 |
| 10/23/93 | 57175 | 296 | 574539 | 45531 | 9640 | 68593 | 123764 |
| 10/24/93 | 58124 | 1376 | 566700 | 80158 | 24795 | 89824 | 194777 |
| 10/25/93 | 58076 | 6 | 579371 | 81729 | 31069 | 90523 | 203321 |
| 10/26/93 | 50547 | 120 | 573812 | 47385 | 19280 | 78806 | 145471 |
| 10/27/93 | 59829 | 396 | 579879 | 29476 | 6980 | 52604 | 89060 |
| 10/28/93 | 57122 | 94 | 529309 | 13816 | 2152 | 24101 | 40069 |
| 10/29/93 | 58602 | 13 | 557401 | 31560 | 3710 | 57351 | 92621 |
| 10/30/93 | 58017 | 227 | 493749 | 13999 | 968 | 38030 | 52997 |
| 10/31/93 | 55128 | 104 | 565378 | 93262 | 22014 | 85646 | 200922 |
| MTD | 1747384 | 30710 | 16281375 | 1623935 | 461342 | 1738441 | 3823718 |

| | SURPLUS COG PRODUCTION MCF | COG HIGH PRESS. FLARE MCF | BFG used in BOILERS MCF | BFG FLARED #1 Stack MCF | BFG FLARED #2 Stack MCF | BFG FLARED #4 Stack MCF | BFG FLARED TOTAL MCF |
|---|---|---|---|---|---|---|---|
| 11/1/93 | 58023 | 69 | 580026 | 88486 | 10402 | 69739 | 168627 |
| 11/2/93 | 57407 | 36 | 576063 | 79592 | 9104 | 63156 | 151852 |
| 11/3/93 | 58895 | 957 | 581137 | 97379 | 24115 | 83624 | 205118 |
| 11/4/93 | 56357 | 159 | 330934 | 43251 | 2536 | 4668 | 50455 |
| 11/5/93 | 56521 | 43 | 300898 | 77081 | 3171 | 235 | 80487 |
| 11/6/93 | 56735 | 144 | 416405 | 71116 | 30036 | 49283 | 150435 |
| 11/7/93 | 56784 | 2527 | 452792 | 63121 | 23312 | 60424 | 146857 |
| 11/8/93 | 55844 | 1264 | 530137 | 83041 | 50448 | 89025 | 222514 |
| 11/9/93 | 54920 | 78 | 593334 | 72257 | 17304 | 79620 | 169181 |
| 11/10/93 | 58699 | 77 | 575971 | 43822 | 9587 | 66526 | 119935 |
| 11/11/93 | 59307 | 521 | 597007 | 39977 | 10401 | 65995 | 116373 |
| 11/12/93 | 58900 | 223 | 649343 | 14653 | 5171 | 67469 | 87293 |
| 11/13/93 | 60758 | 1882 | 662305 | 31782 | 11887 | 85233 | 128902 |
| 11/14/93 | 60847 | 2511 | 615923 | 54347 | 25155 | 97770 | 177272 |
| 11/15/93 | 57791 | 307 | 610225 | 30923 | 12275 | 71849 | 115047 |
| 11/16/93 | 53482 | 1181 | 476578 | 13884 | 1413 | 43749 | 59046 |
| 11/17/93 | 51923 | 864 | 616717 | 30209 | 849 | 59845 | 90903 |
| 11/18/93 | 53866 | 142 | 519533 | 10309 | 202 | 41441 | 51952 |
| 11/19/93 | 54236 | 340 | 556118 | 51036 | 4734 | 54321 | 110091 |
| 11/20/93 | 58389 | 686 | 607530 | 42247 | 1264 | 62155 | 105666 |
| 11/21/93 | 59059 | 1130 | 616090 | 46014 | 790 | 64511 | 111315 |
| 11/22/93 | 56557 | 602 | 530820 | 22751 | 310 | 42302 | 65363 |
| 11/23/93 | 57504 | 1364 | 525097 | 32912 | 2339 | 43869 | 79120 |
| 11/24/93 | 57197 | 248 | 551101 | 40639 | 3588 | 62010 | 106237 |
| 11/25/93 | 57195 | 421 | 580548 | 33347 | 1306 | 56759 | 91412 |
| 11/26/93 | 58529 | 1269 | 617966 | 19296 | 650 | 51082 | 71028 |
| 11/27/93 | 57659 | 249 | 622013 | 48350 | 449 | 83725 | 132524 |
| 11/28/93 | 57513 | 1162 | 591179 | 64047 | 3105 | 89188 | 156340 |
| 11/29/93 | 56855 | 7 | 573122 | 71844 | 2988 | 90316 | 165148 |
| 11/30/93 | 57367 | 0 | 532383 | 72343 | 746 | 83944 | 157033 |
| | 0 | | | | | | |
| MTD | 1715119 | 20463 | 16589295 | 1490056 | 269637 | 1883833 | 3643526 |

| | SURPLUS COG PRODUCTION MCF | COG HIGH PRESS. FLARE MCF | BFG used in BOILERS MCF | BFG FLARED #1 Stack MCF | BFG FLARED #2 Stack MCF | BFG FLARED #4 Stack MCF | BFG FLARED TOTAL MCF |
|---|---|---|---|---|---|---|---|
| 12/1/93 | 57852 | 405 | 474384 | 39973 | 3776 | 69159 | 112908 |
| 12/2/93 | 57501 | 0 | 545870 | 24513 | 4446 | 52548 | 81507 |
| 12/3/93 | 58111 | 1232 | 442052 | 16653 | 3455 | 57123 | 77231 |
| 12/4/93 | 59213 | 55 | 419912 | 908 | 94 | 46856 | 47858 |
| 12/5/93 | 58738 | 102 | 498302 | 20235 | 1371 | 58627 | 80233 |
| 12/6/93 | 59757 | 61 | 436752 | 14474 | 64 | 60380 | 74918 |
| 12/7/93 | 52829 | 218 | 531095 | 19121 | 1171 | 78997 | 99289 |
| 12/8/93 | 56800 | 62 | 558211 | 14077 | 567 | 71389 | 86033 |
| 12/9/93 | 58596 | 11 | 467590 | 40519 | 4 | 40519 | 81042 |
| 12/10/93 | 59481 | 65 | 563174 | 9845 | 72 | 52991 | 62908 |
| 12/11/93 | 58421 | 1188 | 563021 | 19802 | 478 | 63663 | 83943 |
| 12/12/93 | 58315 | 572 | 525596 | 61774 | 418 | 75453 | 137645 |
| 12/13/93 | 59752 | 90 | 517343 | 26620 | 202 | 53108 | 79930 |
| 12/14/93 | 60887 | 93 | 562727 | 33357 | 103 | 55123 | 88583 |
| 12/15/93 | 56253 | 1340 | 586535 | 22045 | 26 | 55301 | 77372 |
| 12/16/93 | 57101 | 10 | 447424 | 16528 | 164 | 51069 | 67761 |
| 12/17/93 | 58892 | 17 | 552701 | 57325 | 2150 | 56928 | 116403 |
| 12/18/93 | 58693 | 166 | 555511 | 51609 | 636 | 47122 | 99367 |
| 12/19/93 | 58728 | 71 | 563658 | 41512 | 1107 | 41620 | 84239 |
| 12/20/93 | 57919 | 51 | 606834 | 50102 | 1703 | 42878 | 94683 |
| 12/21/93 | 58617 | 91 | 599430 | 43300 | 793 | 39980 | 84073 |
| 12/22/93 | 59788 | 198 | 551975 | 25731 | 496 | 32070 | 58297 |
| 12/23/93 | 60952 | 2024 | 581078 | 50861 | 967 | 41411 | 93239 |
| 12/24/93 | 61379 | 8472 | 545482 | 72976 | 5087 | 46843 | 124906 |
| 12/25/93 | 65170 | 10742 | 515453 | 94372 | 7636 | 50782 | 152790 |
| 12/26/93 | 58089 | 1495 | 520643 | 26564 | 3942 | 38415 | 68921 |
| 12/27/93 | 60505 | 1318 | 583154 | 0 | 3951 | 32970 | 36921 |
| 12/28/93 | 57455 | 0 | 519573 | 1772 | 24051 | 25823 | 51646 |
| 12/29/93 | 56828 | 0 | 575016 | 0 | 2830 | 29864 | 32694 |
| 12/30/93 | 57889 | 0 | 452244 | 0 | 1037 | 35599 | 36636 |
| 12/31/93 | 58144 | 220 | 498273 | 12 | 8653 | 73406 | 82071 |
| MTD | 1760511 | 30149 | 15862740 | 896568 | 72797 | 1504611 | 2473976 |

**********

BY-PRODUCT GAS SUMMARY FOR Jan 94

Energy/Environmental Div. - Utilities Dist.

**********

| DATE | SURPLUS COG PRODUCED MCF | COG HIGH PRESS. FLARE MCF | BFG USED IN BOILERS MCF | BFG FLARED #1 STACK MCF | BFG FLARED #2 STACK MCF | BFG FLARED #4 STACK MCF | BFG FLARED TOTAL MCF |
|---|---|---|---|---|---|---|---|
| 01 | 60559 | 156 | 508531 | 0 | 8613 | 69830 | 78443 |
| 02 | 60551 | 59 | 536575 | 0 | 31222 | 83453 | 114675 |
| 03 | 64072 | 4661 | 503048 | 0 | 52862 | 94468 | 147330 |
| 04 | 70192 | 10266 | 538109 | 0 | 7549 | 70624 | 78173 |
| 05 | 62020 | 3714 | 525803 | 0 | 9817 | 77657 | 87474 |
| 06 | 58308 | 43 | 427570 | 35 | 2022 | 59456 | 61512 |
| 07 | 55759 | 0 | 530802 | 0 | 1273 | 58009 | 59281 |
| 08 | 39544 | 0 | 524458 | 0 | 2591 | 72444 | 75035 |
| 09 | 49310 | 0 | 533573 | 0 | 3160 | 57713 | 60873 |
| 10 | 53615 | 0 | 433200 | 0 | 15237 | 47958 | 63195 |
| 11 | 57804 | 111 | 521462 | 0 | 11592 | 82699 | 94291 |
| 12 | 57482 | 138 | 520953 | 1975 | 8786 | 73834 | 84595 |
| 13 | 57296 | 0 | 293034 | 0 | 3746 | 21637 | 25383 |
| 14 | 48723 | 0 | 504422 | 0 | 3671 | 47206 | 50877 |
| 15 | 33497 | 0 | 428761 | 0 | 3485 | 46068 | 49552 |
| 16 | 40426 | 0 | 415525 | 0 | 623 | 26234 | 26857 |
| 17 | 62446 | 13696 | 539941 | 0 | 268 | 36720 | 36989 |
| 18 | 85189 | 52313 | 475075 | 0 | 380 | 29632 | 30012 |
| 19 | 45663 | 15398 | 442171 | 0 | 4452 | 26650 | 31102 |
| 20 | 55344 | 1 | 478583 | 0 | 718 | 38884 | 39602 |
| 21 | 56838 | 0 | 475908 | 0 | 327 | 37131 | 37459 |
| 22 | 57373 | 111 | 548050 | 0 | 112 | 39550 | 39662 |
| 23 | 58023 | 4242 | 544843 | 0 | 1907 | 44504 | 46411 |
| 24 | 57056 | 363 | 426100 | 0 | 8570 | 66695 | 75265 |
| 25 | 56725 | 659 | 482631 | 0 | 10686 | 78196 | 88883 |
| 26 | 57339 | 1468 | 539503 | 0 | 1109 | 65628 | 66737 |
| 27 | 56281 | 0 | 452544 | 0 | 109 | 42485 | 42594 |
| 28 | 54799 | 0 | 481068 | 0 | 25460 | 88098 | 113558 |
| 29 | 56659 | 175 | 512526 | 0 | 1089 | 61860 | 62949 |
| 30 | 56264 | 0 | 468716 | 0 | 11495 | 34830 | 46325 |
| 31 | 56823 | 1349 | 432393 | 0 | 1843 | 57912 | 59756 |
| MTD | 1741982 | 108922 | 15045875 | 2011 | 234775 | 1738064 | 1974850 |

Filename: SqbyOct 01 94 13:02

Distribution: TJH

**********

BY-PRODUCT GAS SUMMARY FOR Feb 94

Energy/Environmental Div. - Utilities Dist.

**********

| DATE | SURPLUS COG PRODUCED MCF | COG HIGH PRESS. FLARE MCF | BFG USED IN BOILERS MCF | BFG FLARED #1 STACK MCF | BFG FLARED #2 STACK MCF | BFG FLARED #4 STACK MCF | BFG FLARED TOTAL MCF |
|---|---|---|---|---|---|---|---|
| 01 | 53973 | 4 | 479423 | 0 | 1738 | 67713 | 69451 |
| 02 | 56998 | 2151 | 540922 | 0 | 1409 | 58263 | 59671 |
| 03 | 57552 | 18 | 490013 | 0 | 74 | 45711 | 45785 |
| 04 | 58177 | 0 | 528836 | 0 | 1024 | 52984 | 54007 |
| 05 | 57205 | 0 | 575074 | 0 | 753 | 50883 | 51636 |
| 06 | 52412 | 0 | 542381 | 0 | 267 | 42387 | 42654 |
| 07 | 53668 | 0 | 499705 | 0 | 3046 | 66672 | 69718 |
| 08 | 54470 | 0 | 505355 | 0 | 193 | 47201 | 47394 |
| 09 | 56067 | 20 | 526655 | 0 | 2310 | 49352 | 51662 |
| 10 | 58762 | 1033 | 563886 | 0 | 819 | 57215 | 58034 |
| 11 | 59694 | 0 | 526995 | 0 | 3054 | 61324 | 64378 |
| 12 | 58868 | 314 | 518479 | 0 | 16473 | 74993 | 91466 |
| 13 | 58802 | 460 | 503792 | 0 | 4856 | 58183 | 63039 |
| 14 | 57641 | 1527 | 532353 | 0 | 5139 | 73875 | 79014 |
| 15 | 58067 | 1 | 475717 | 0 | 2050 | 43302 | 45352 |
| 16 | 58249 | 7 | 534375 | 0 | 13129 | 68722 | 81851 |
| 17 | 59062 | 0 | 513877 | 0 | 3842 | 62698 | 66540 |
| 18 | 53263 | 388 | 462817 | 0 | 484 | 45985 | 46469 |
| 19 | 60851 | 393 | 526979 | 0 | 13230 | 85179 | 98409 |
| 20 | 61610 | 607 | 531132 | 0 | 17995 | 83890 | 101884 |
| 21 | 59869 | 22 | 551654 | 0 | 8289 | 69730 | 78019 |
| 22 | 59531 | 4900 | 547484 | 0 | 3059 | 59522 | 62581 |
| 23 | 58060 | 406 | 558482 | 0 | 675 | 52826 | 53502 |
| 24 | 57412 | 0 | 447805 | 0 | 1040 | 41149 | 42189 |
| 25 | 59785 | 91 | 511201 | 0 | 3235 | 61712 | 64947 |
| 26 | 59412 | 0 | 525418 | 0 | 5837 | 72337 | 78174 |
| 27 | 57629 | 65 | 606918 | 0 | 887 | 62888 | 63775 |
| 28 | 60860 | 1811 | 609973 | 0 | 1447 | 61507 | 62954 |
| MTD | 1617948 | 14218 | 14737701 | 0 | 116353 | 1678201 | 1794555 |

Filename: SqbyOct 01 94 12:41

Distribution: TJH

**********

BY-PRODUCT GAS SUMMARY FOR Mar 94

Energy/Environmental Div. - Utilities Dist.

**********

| DATE | SURPLUS COG PRODUCED MCF | COG HIGH PRESS. FLARE MCF | BFG USED IN BOILERS MCF | BFG FLARED #1 STACK MCF | BFG FLARED #2 STACK MCF | BFG FLARED #4 STACK MCF | BFG FLARED TOTAL MCF |
|---|---|---|---|---|---|---|---|
| 01 | 61434 | 698 | 511433 | 0 | 442 | 41875 | 42317 |
| 02 | 60580 | 8 | 502254 | 0 | 1890 | 72746 | 74635 |
| 03 | 61859 | 1919 | 531716 | 0 | 53 | 44925 | 44978 |
| 04 | 63707 | 1340 | 579373 | 0 | 589 | 54268 | 54858 |
| 05 | 63563 | 264 | 545898 | 0 | 488 | 61800 | 62288 |
| 06 | 64291 | 2872 | 560162 | 0 | 3033 | 58035 | 61069 |
| 07 | 65105 | 2727 | 428333 | 0 | 9016 | 65031 | 74047 |
| 08 | 61958 | 557 | 456230 | 0 | 1006 | 66169 | 67175 |
| 09 | 62148 | 487 | 455150 | 0 | 2232 | 73081 | 75313 |
| 10 | 61320 | 44 | 512600 | 0 | 281 | 50806 | 51087 |
| 11 | 62004 | 166 | 415379 | 0 | 976 | 39790 | 40765 |
| 12 | 62002 | 134 | 505538 | 0 | 1802 | 50651 | 52453 |
| 13 | 50331 | 257 | 482765 | 0 | 738 | 65398 | 66136 |
| 14 | 54677 | 4106 | 507023 | 0 | 2624 | 72983 | 75606 |
| 15 | 60382 | 880 | 580348 | 0 | 837 | 67883 | 68720 |
| 16 | 56715 | 777 | 590155 | 0 | 522 | 58991 | 59513 |
| 17 | 58274 | 460 | 548823 | 0 | 1196 | 49519 | 50715 |
| 18 | 60204 | 940 | 561646 | 0 | 2139 | 62736 | 64875 |
| 19 | 60874 | 1315 | 572872 | 0 | 1508 | 59417 | 60925 |
| 20 | 60186 | 392 | 495193 | 0 | 2378 | 48633 | 51011 |
| 21 | 59892 | 297 | 546738 | 0 | 4218 | 66225 | 70443 |
| 22 | 61042 | 1325 | 535546 | 0 | 1608 | 64334 | 65942 |
| 23 | 60915 | 1599 | 574667 | 0 | 2855 | 72213 | 75067 |
| 24 | 60805 | 323 | 554909 | 0 | 1290 | 54787 | 56076 |
| 25 | 59985 | 523 | 551050 | 0 | 1085 | 65787 | 66872 |
| 26 | 60930 | 3140 | 459786 | 0 | 1052 | 49748 | 50800 |
| 27 | 60769 | 10 | 446453 | 0 | 25708 | 99124 | 124832 |
| 28 | 60333 | 916 | 544853 | 0 | 5072 | 92012 | 97084 |
| 29 | 59581 | 1318 | 539848 | 0 | 6522 | 82348 | 88869 |
| 30 | 59948 | 750 | 531539 | 0 | 1715 | 60851 | 62566 |
| 31 | 60032 | 506 | 561916 | 0 | 915 | 65939 | 66853 |
| MTD | 1875846 | 31051 | 16190197 | 0 | 85787 | 1938104 | 2023891 |

Filename: SqbyOct 01 94 12:20

Distribution: TJH

**********

BY-PRODUCT GAS SUMMARY FOR Apr 94

Energy/Environmental Div. - Utilities Dist.

**********

| DATE | SURPLUS COG PRODUCED MCF | COG HIGH PRESS. FLARE MCF | BFG USED IN BOILERS MCF | BFG FLARED #1 STACK MCF | BFG FLARED #2 STACK MCF | BFG FLARED #4 STACK MCF | BFG FLARED TOTAL MCF |
|---|---|---|---|---|---|---|---|
| 01 | 57217 | 701 | 562676 | 0 | 1631 | 76076 | 77706 |
| 02 | 61137 | 611 | 509643 | 0 | 447 | 45292 | 45739 |
| 03 | 60429 | 2400 | 555982 | 0 | 1409 | 66629 | 68038 |
| 04 | 60049 | 1699 | 535974 | 0 | 3364 | 74657 | 78020 |
| 05 | 60276 | 392 | 267742 | 0 | 584 | 21319 | 21903 |
| 06 | 58355 | 1432 | 473600 | 0 | 8208 | 62401 | 70609 |
| 07 | 58695 | 283 | 576253 | 0 | 1255 | 74313 | 75568 |
| 08 | 57906 | 214 | 519730 | 0 | 3178 | 67954 | 71132 |
| 09 | 61338 | 5353 | 460363 | 0 | 20768 | 67807 | 88576 |
| 10 | 58708 | 139 | 467633 | 0 | 14569 | 89466 | 104035 |
| 11 | 58675 | 0 | 477275 | 0 | 13189 | 88211 | 101401 |
| 12 | 57891 | 2650 | 534190 | 0 | 3904 | 87066 | 90970 |
| 13 | 60808 | 8377 | 520682 | 3298 | 9617 | 98639 | 111554 |
| 14 | 58579 | 7331 | 504717 | 16990 | 3070 | 68690 | 88750 |
| 15 | 61230 | 5112 | 434004 | 48733 | 4751 | 61364 | 114848 |
| 16 | 60875 | 2600 | 442956 | 50491 | 7053 | 77636 | 135179 |
| 17 | 61755 | 4754 | 503802 | 65418 | 8257 | 89059 | 162734 |
| 18 | 60239 | 814 | 496401 | 69074 | 17572 | 105477 | 192123 |
| 19 | 61992 | 1852 | 526539 | 47346 | 5936 | 77733 | 131015 |
| 20 | 61648 | 1304 | 509434 | 64947 | 18732 | 94533 | 178212 |
| 21 | 60730 | 602 | 477094 | 31444 | 856 | 37198 | 69498 |
| 22 | 61322 | 1592 | 560631 | 52364 | 3940 | 77063 | 133368 |
| 23 | 61753 | 1911 | 476841 | 54225 | 5952 | 57490 | 117667 |
| 24 | 62884 | 2343 | 470247 | 81507 | 32188 | 81161 | 194856 |
| 25 | 59551 | 1157 | 490453 | 49104 | 8450 | 55555 | 113109 |
| 26 | 59764 | 3143 | 525737 | 47098 | 1 | 59755 | 106853 |
| 27 | 58801 | 4996 | 505308 | 38653 | 930 | 47613 | 87197 |
| 28 | 57637 | 2216 | 537931 | 55530 | 3760 | 74113 | 133403 |
| 29 | 59869 | 281 | 477487 | 42887 | 2416 | 61635 | 106937 |
| 30 | 62013 | 722 | 521979 | 51936 | 2706 | 58045 | 112686 |
| MTD | 1802125 | 66983 | 14923302 | 871043 | 208694 | 2103950 | 3183687 |

Filename: SxbyOct 01 94 11:30

Distribution: TJH

**********

BY-PRODUCT GAS SUMMARY FOR May 94

Energy/Environmental Div. - Utilities Dist.

**********

| DATE | SURPLUS COG PRODUCED MCF | COG HIGH PRESS. FLARE MCF | BFG USED IN BOILERS MCF | BFG FLARED #1 STACK MCF | BFG FLARED #2 STACK MCF | BFG FLARED #4 STACK MCF | BFG FLARED TOTAL MCF |
|---|---|---|---|---|---|---|---|
| 01 | 63195 | 4212 | 566376 | 63776 | 4479 | 78002 | 146256 |
| 02 | 60359 | 576 | 474386 | 45648 | 3029 | 57656 | 106333 |
| 03 | 62877 | 4501 | 519157 | 43421 | 20914 | 77133 | 141468 |
| 04 | 60255 | 2175 | 482621 | 30847 | 370 | 37924 | 69141 |
| 05 | 57524 | 673 | 483467 | 23471 | 332 | 37140 | 60943 |
| 06 | 61468 | 3986 | 518651 | 31402 | 448 | 39035 | 70884 |
| 07 | 64128 | 6522 | 519992 | 34187 | 350 | 42225 | 76763 |
| 08 | 63726 | 5627 | 543552 | 61391 | 5011 | 83032 | 149433 |
| 09 | 65280 | 11327 | 532747 | 53327 | 1964 | 70868 | 126159 |
| 10 | 66564 | 14574 | 503752 | 47309 | 2636 | 45416 | 95361 |
| 11 | 64692 | 14619 | 472702 | 45899 | 2685 | 51672 | 100256 |
| 12 | 59856 | 872 | 413311 | 42893 | 899 | 44777 | 88570 |
| 13 | 58417 | 270 | 515152 | 58803 | 2064 | 46202 | 107069 |
| 14 | 58444 | 1627 | 553211 | 42027 | 227 | 35089 | 77343 |
| 15 | 60930 | 1881 | 472849 | 52794 | 2900 | 55111 | 110805 |
| 16 | 58510 | 1514 | 499727 | 63067 | 1690 | 68582 | 133340 |
| 17 | 58876 | 1700 | 440508 | 62516 | 5457 | 55349 | 123322 |
| 18 | 55800 | 1917 | 473283 | 86405 | 9 | 74003 | 160417 |
| 19 | 59095 | 67 | 304684 | 34541 | 1156 | 13973 | 49669 |
| 20 | 61842 | 4929 | 395825 | 51977 | 2938 | 29949 | 84864 |
| 21 | 61869 | 3172 | 500507 | 75428 | 2745 | 87242 | 165416 |
| 22 | 62305 | 7704 | 518038 | 81821 | 3281 | 95008 | 180110 |
| 23 | 61031 | 1966 | 511477 | 71774 | 6480 | 77930 | 156184 |
| 24 | 63596 | 5516 | 449998 | 65818 | 20662 | 83702 | 170183 |
| 25 | 63482 | 5682 | 540543 | 76601 | 4379 | 88984 | 169963 |
| 26 | 59382 | 1974 | 472510 | 34748 | 1250 | 43450 | 79448 |
| 27 | 61478 | 3299 | 440559 | 62448 | 18677 | 71026 | 152152 |
| 28 | 62725 | 825 | 501550 | 50749 | 4139 | 62057 | 116945 |
| 29 | 63141 | 4314 | 494195 | 56239 | 3111 | 63657 | 123007 |
| 30 | 61693 | 6013 | 455365 | 67611 | 9484 | 84371 | 161465 |
| 31 | 63713 | 8517 | 442042 | 36791 | 183 | 38621 | 75595 |
| MTD | 1906254 | 132552 | 15012738 | 1655727 | 133950 | 1839187 | 3628865 |

Filename: SxbyOct 01 94 11:19

Distribution: TJH

**********

BY-PRODUCT GAS SUMMARY FOR Jun 94

Energy/Environmental Div. - Utilities Dist.

**********

| DATE | SURPLUS COG PRODUCED MCF | COG HIGH PRESS. FLARE MCF | BFG USED IN BOILERS MCF | BFG FLARED #1 STACK MCF | BFG FLARED #2 STACK MCF | BFG FLARED #4 STACK MCF | BFG FLARED TOTAL MCF |
|---|---|---|---|---|---|---|---|
| 01 | 65501 | 8297 | 501184 | 53849 | 2359 | 64904 | 121112 |
| 02 | 59217 | 3070 | 500192 | 44709 | 3441 | 72937 | 121087 |
| 03 | 63253 | 6695 | 536733 | 43273 | 571 | 63647 | 107491 |
| 04 | 62699 | 4090 | 511818 | 61098 | 2553 | 96686 | 160338 |
| 05 | 61802 | 7298 | 556310 | 66520 | 1257 | 92825 | 160602 |
| 06 | 61885 | 3056 | 494541 | 43613 | 742 | 59772 | 104128 |
| 07 | 60744 | 2408 | 516032 | 58823 | 1623 | 76929 | 137374 |
| 08 | 58814 | 631 | 481833 | 37775 | 530 | 58936 | 97241 |
| 09 | 60504 | 1135 | 502670 | 39739 | 360 | 58094 | 98193 |
| 10 | 64594 | 3415 | 466071 | 50961 | 2768 | 61154 | 114883 |
| 11 | 65718 | 16337 | 521807 | 52710 | 801 | 70141 | 123652 |
| 12 | 63689 | 5012 | 517124 | 51163 | 2368 | 70425 | 123956 |
| 13 | 61828 | 3929 | 503775 | 68018 | 14523 | 88821 | 171362 |
| 14 | 60929 | 5747 | 428938 | 49796 | 2923 | 54226 | 106945 |
| 15 | 59084 | 5471 | 517361 | 62688 | 1862 | 71745 | 136295 |
| 16 | 61362 | 6594 | 526637 | 50660 | 389 | 66104 | 117153 |
| 17 | 61880 | 2251 | 486284 | 76105 | 9000 | 99941 | 185045 |
| 18 | 64352 | 15595 | 540815 | 64661 | 2487 | 91723 | 158871 |
| 19 | 63319 | 19727 | 564049 | 42896 | 1835 | 66425 | 111156 |
| 20 | 65052 | 5941 | 569273 | 60910 | 2269 | 83898 | 147077 |
| 21 | 67690 | 4239 | 511669 | 64470 | 10674 | 76790 | 151934 |
| 22 | 68709 | 4630 | 555968 | 48450 | 3367 | 73167 | 124984 |
| 23 | 64374 | 915 | 448124 | 27529 | 3680 | 58327 | 89536 |
| 24 | 68406 | 7303 | 413839 | 44683 | 5224 | 63282 | 113189 |
| 25 | 65544 | 3007 | 484741 | 67609 | 23606 | 109451 | 200666 |
| 26 | 65873 | 3319 | 522881 | 63865 | 20660 | 60406 | 144930 |
| 27 | 56474 | 1941 | 498669 | 52310 | 7744 | 47019 | 107073 |
| 28 | 61911 | 4143 | 522735 | 51416 | 2066 | 59030 | 112513 |
| 29 | 72919 | 21078 | 521014 | 129073 | 31644 | 59567 | 220284 |
| 30 | 76064 | 21790 | 350878 | 124989 | 49298 | 54324 | 228612 |
| MTD | 1914193 | 199064 | 15073965 | 1754363 | 212625 | 2130696 | 4097683 |

Filename: SxbyOct 01 94 11:10

Distribution: TJH

**********

BY-PRODUCT GAS SUMMARY FOR Jul 94

Energy/Environmental Div. - Utilities Dist.

**********

| DATE | SURPLUS COG PRODUCED MCF | COG HIGH PRESS. FLARE MCF | BFG USED IN BOILERS MCF | BFG FLARED #1 STACK MCF | BFG FLARED #2 STACK MCF | BFG FLARED #4 STACK MCF | BFG FLARED TOTAL MCF |
|---|---|---|---|---|---|---|---|
| 01 | 67176 | 7620 | 481784 | 58505 | 9265 | 60800 | 128569 |
| 02 | 72320 | 20891 | 461156 | 42397 | 13463 | 50719 | 106580 |
| 03 | 72832 | 21777 | 428338 | 35112 | 0 | 42279 | 77391 |
| 04 | 72614 | 6727 | 459276 | 42278 | 0 | 51494 | 93773 |
| 05 | 60865 | 6598 | 478577 | 50318 | 112 | 65016 | 115447 |
| 06 | 62588 | 11029 | 479442 | 47933 | 39 | 60983 | 108955 |
| 07 | 61869 | 14912 | 426725 | 41739 | 329 | 57502 | 99569 |
| 08 | 58647 | 9288 | 494935 | 31450 | 0 | 44643 | 76093 |
| 09 | 56285 | 12341 | 491762 | 27676 | 0 | 38710 | 66386 |
| 10 | 63321 | 8079 | 479602 | 34718 | 0 | 49981 | 84699 |
| 11 | 61682 | 84 | 407862 | 33227 | 758 | 47616 | 81601 |
| 12 | 62805 | 3354 | 423114 | 26328 | 0 | 34263 | 60591 |
| 13 | 61857 | 735 | 446074 | 36768 | 0 | 46308 | 83076 |
| 14 | 62578 | 1625 | 481743 | 36348 | 417 | 51179 | 87944 |
| 15 | 61746 | 3286 | 492889 | 30065 | 8402 | 39528 | 77994 |
| 16 | 68596 | 21166 | 497401 | 35751 | 5869 | 38522 | 80142 |
| 17 | 65651 | 10066 | 477217 | 41186 | 34088 | 30357 | 105631 |
| 18 | 61836 | 561 | 502558 | 30037 | 4305 | 35034 | 69377 |
| 19 | 62175 | 2561 | 484562 | 36380 | 5355 | 59497 | 101231 |
| 20 | 63863 | 7046 | 408926 | 41218 | 21716 | 69833 | 132768 |
| 21 | 61044 | 2632 | 361922 | 53797 | 49634 | 93942 | 197372 |
| 22 | 62570 | 3217 | 451114 | 48741 | 15559 | 82617 | 146918 |
| 23 | 60768 | 7272 | 450987 | 43801 | 2279 | 63284 | 109365 |
| 24 | 59916 | 2446 | 435372 | 57425 | 13381 | 77611 | 148417 |
| 25 | 59237 | 222 | 389465 | 31533 | 2996 | 47889 | 82418 |
| 26 | 59499 | 1684 | 451402 | 40830 | 4226 | 58417 | 103474 |
| 27 | 57966 | 195 | 435677 | 40185 | 10097 | 56573 | 106856 |
| 28 | 58192 | 716 | 450670 | 37408 | 10520 | 80311 | 128239 |
| 29 | 59947 | 3802 | 508493 | 26356 | 834 | 63857 | 91046 |
| 30 | 61717 | 12528 | 546041 | 24055 | 206 | 61570 | 85831 |
| 31 | 59299 | 2072 | 543218 | 24061 | 1 | 62534 | 86596 |
| MTD | 1941460 | 206534 | 14328304 | 1187628 | 213851 | 1722869 | 3124349 |

Filename: SxbyOct 01 94 11:04

Distribution: TJH

**********

BY-PRODUCT GAS SUMMARY FOR Aug 94

Energy/Environmental Div. - Utilities Dist.

**********

| DATE | SURPLUS COG PRODUCED MCF | COG HIGH PRESS. FLARE MCF | BFG USED IN BOILERS MCF | BFG FLARED #1 STACK MCF | BFG FLARED #2 STACK MCF | BFG FLARED #4 STACK MCF | BFG FLARED TOTAL MCF |
|---|---|---|---|---|---|---|---|
| 01 | 60900 | 2054 | 492967 | 27735 | 122 | 55315 | 83172 |
| 02 | 61149 | 10493 | 533766 | 26827 | 7 | 65650 | 92483 |
| 03 | 60241 | 12961 | 528563 | 26542 | 0 | 64227 | 90769 |
| 04 | 61976 | 11390 | 423268 | 24715 | 0 | 57897 | 82613 |
| 05 | 61965 | 15737 | 469021 | 30056 | 257 | 70179 | 100492 |
| 06 | 66405 | 33196 | 524491 | 25621 | 200 | 69036 | 94857 |
| 07 | 60774 | 10369 | 443630 | 28783 | 1276 | 59864 | 89923 |
| 08 | 60285 | 2194 | 451292 | 32577 | 3372 | 61734 | 97683 |
| 09 | 61139 | 5335 | 449670 | 29009 | 4019 | 53396 | 86425 |
| 10 | 58353 | 1656 | 491428 | 23855 | 3600 | 69087 | 96543 |
| 11 | 54689 | 1729 | 217720 | 35449 | 1721 | 18176 | 55346 |
| 12 | 56209 | 1879 | 320508 | 42033 | 38797 | 49394 | 130223 |
| 13 | 58438 | 4110 | 454842 | 39103 | 34126 | 68697 | 141926 |
| 14 | 58457 | 3223 | 500871 | 53543 | 93332 | 116891 | 263766 |
| 15 | 57657 | 1677 | 481181 | 32588 | 22677 | 78820 | 134084 |
| 16 | 60637 | 7939 | 446865 | 47991 | 64689 | 97002 | 209682 |
| 17 | 59890 | 6851 | 488074 | 39262 | 43444 | 84510 | 167215 |
| 18 | 60749 | 4957 | 480834 | 49475 | 54442 | 96551 | 200468 |
| 19 | 58896 | 95 | 452756 | 36852 | 21783 | 72509 | 131144 |
| 20 | 60330 | 3489 | 499490 | 53820 | 66172 | 100924 | 220915 |
| 21 | 63239 | 7000 | 405695 | 41895 | 31690 | 48146 | 121731 |
| 22 | 60879 | 3529 | 477457 | 44921 | 36143 | 78339 | 159403 |
| 23 | 62280 | 12259 | 520741 | 44340 | 27943 | 62978 | 135261 |
| 24 | 60831 | 715 | 511445 | 48304 | 45469 | 72072 | 165844 |
| 25 | 62429 | 5011 | 517352 | 33397 | 14281 | 53491 | 101170 |
| 26 | 60871 | 2711 | 542396 | 50668 | 45401 | 74738 | 170807 |
| 27 | 61607 | 8512 | 505047 | 52032 | 56739 | 81049 | 189820 |
| 28 | 63562 | 1673 | 468981 | 73359 | 117992 | 99125 | 290476 |
| 29 | 62654 | 3289 | 527889 | 47762 | 47113 | 74147 | 169022 |
| 30 | 59938 | 3514 | 491787 | 58712 | 72879 | 64638 | 196229 |
| 31 | 58404 | 2038 | 465001 | 43884 | 44703 | 68779 | 157366 |
| MTD | 1875835 | 191588 | 14585026 | 1245108 | 994389 | 2187362 | 4426859 |

Filename: SxbyOct 01 94 10:56

Distribution: TJH

**********

BY-PRODUCT GAS SUMMARY FOR Sep 94

Energy/Environmental Div. - Utilities Dist.

**********

| DATE | SURPLUS COG PRODUCED MCF | COG HIGH PRESS. FLARE MCF | BFG USED IN BOILERS MCF | BFG FLARED #1 STACK MCF | BFG FLARED #2 STACK MCF | BFG FLARED #4 STACK MCF | BFG FLARED TOTAL MCF |
|---|---|---|---|---|---|---|---|
| 01 | 61513 | 2966 | 498281 | 31733 | 14360 | 47404 | 93497 |
| 02 | 59192 | 6875 | 439596 | 51906 | 57706 | 70461 | 180073 |
| 03 | 60006 | 4000 | 441733 | 74952 | 120133 | 100649 | 295734 |
| 04 | 59183 | 10367 | 430938 | 75031 | 117849 | 95456 | 288335 |
| 05 | 63304 | 6980 | 459123 | 71175 | 104220 | 95343 | 270738 |
| 06 | 60952 | 4714 | 465842 | 65186 | 88133 | 87130 | 240448 |
| 07 | 59038 | 2700 | 495743 | 65382 | 80720 | 89704 | 235806 |
| 08 | 62007 | 1610 | 465321 | 38333 | 13688 | 53867 | 105889 |
| 09 | 63924 | 3339 | 491293 | 54847 | 51773 | 75406 | 182026 |
| 10 | 64940 | 1558 | 416273 | 59795 | 86961 | 91513 | 238269 |
| 11 | 64528 | 6525 | 430222 | 74084 | 113339 | 89702 | 277124 |
| 12 | 61748 | 7052 | 538552 | 72805 | 65360 | 40642 | 178807 |
| 13 | 64200 | 17358 | 532991 | 93089 | 83329 | 21329 | 197746 |
| 14 | 62525 | 11139 | 557391 | 94800 | 90900 | 21247 | 206948 |
| 15 | 63782 | 4057 | 365497 | 53520 | 47651 | 15205 | 116376 |
| 16 | 62283 | 1176 | 428577 | 78812 | 74949 | 28501 | 182262 |
| 17 | 66446 | 6154 | 438539 | 107506 | 148166 | 20973 | 276645 |
| 18 | 66563 | 834 | 445354 | 110562 | 146293 | 21123 | 277979 |
| 19 | 62922 | 2599 | 452964 | 55090 | 129403 | 52123 | 236616 |
| 20 | 67885 | 29212 | 489820 | 28441 | 89946 | 53314 | 171701 |
| 21 | 61980 | 1970 | 480586 | 26166 | 101106 | 56423 | 183695 |
| 22 | 62311 | 1358 | 512294 | 25621 | 118157 | 61385 | 205162 |
| 23 | 59764 | 1251 | 549356 | 22266 | 90130 | 60721 | 173117 |
| 24 | 60983 | 14359 | 568005 | 22153 | 75795 | 55518 | 153466 |
| 25 | 60582 | 3036 | 483980 | 25671 | 64828 | 47660 | 138159 |
| 26 | 61350 | 4899 | 524475 | 28627 | 114385 | 54429 | 197441 |
| 27 | 60213 | 6498 | 531359 | 27615 | 109960 | 58927 | 196501 |
| 28 | 59658 | 1287 | 528235 | 21120 | 55065 | 55998 | 132183 |
| 29 | 59003 | 1661 | 535675 | 20619 | 51034 | 61319 | 132973 |
| 30 | 59087 | 10948 | 568758 | 24589 | 93200 | 75994 | 193783 |
| MTD | 1861872 | 178483 | 14566775 | 1601495 | 2598540 | 1759466 | 5959501 |

Filename: SxbyOct 02 94 07:04

Distribution: TJH

# Blast Furnace Tapping Emissions

1. AP-42 provides the following information on TSP/$PM_{10}$ emissions from Blast Furnace tapping operations:

   - Uncontrolled taphole and trough emissions only - 0.3 lbs TSP/ton of hot metal
   - Uncontrolled casthouse emissions at roof monitor - 0.6 lbs TSP/ton hot metal
   - TSP/$PM_{10}$ split at roof monitor - 51% $PM_{10}$

2. Controlled emission rates from original TSP SIP development:

   - BF #4, 6, 8 - 0.06 lbs TSP/ton hot metal (90% control efficiency)
   - BF #13 - 0.15 lbs TSP/ton hot metal (75% control efficiency)

3. 1993 emission calculations:

   - BF #4, 6, 8 - (0.06 lbs TSP/ton hot metal) x (0.51 lbs $PM_{10}$/ lb TSP) x (3,076,689 tons hot metal produced) x (ton/2000 lbs) = 47.07 tons $PM_{10}$
   - BF #13 - (0.15 lbs TSP/ton hot metal) x (0.51 lbs $PM_{10}$/lb TSP) x (2,894,709 tons hot metal produced) x (ton/2000 lbs) = 110.72 tons $PM_{10}$

USX 7-14

USX - 7-15

Iron Producing- Blast Furnaces

USX-15

Question #15 - Please provide approximate cycle times for blast furnace heating, tapping metal and slag, quenching and removing slag.

Answer - The blast furnace iron making process is continuous. The following numbers represent an approximate smelting and casting schedule for each south furnace (4,6, and 8):

#4 - The taphole is opened approximately 30 minutes after the prior cast is complete. Total cast length averages between 2 and 2 1/2 hours. The slag runs for about 50 minutes to 1 1/4 hours.

#6 - The taphole is opened approximately 45 to 60 minutes after the previous cast has ended. Total cast length averages 110 to 130 minutes, with slag run times between 45 and 60 minutes.

#8 - The next cast is started approximately 45 to 60 minutes after the previous cast has ended. Total cast length averages between 120 and 140 minutes, with slag run times between 45 to 60 minutes.

On all the south furnaces slag is cast into a pit for a 24 hour period, and we then switch to the adjacent pit. The idled pit is then dug out about 12 to 15 hours later. Quenching times are approximately 1 hour of total quench per cast into the slag pit.

#13 blast furnace has three tapholes which make for a different procedure than the south end. #13 will cast almost continuously by opening a new hole immediately after closing the previous hole or if the furnace is running ahead of the cast rate a second hole could be opened at the same time. This will allow the furnace to balance out and avoid ups and downs in chemistry and filling. #13 has two pits; each of which are used for 24 hours on an alternating basis. The pits are quenched as the contractor sees fit and the cleaning of each pit takes anywhere from 6-8 hours.

All of the furnaces are constantly being charged unless they are taken down. The iron bearing burden and coke is continuously charged into the top of the furnace so that the furnace is always full and making hot metal. Material charged into the furnace top will take approximately 5 1/2 to 6 hours to completely come down through the furnace and be cast out of the taphole.

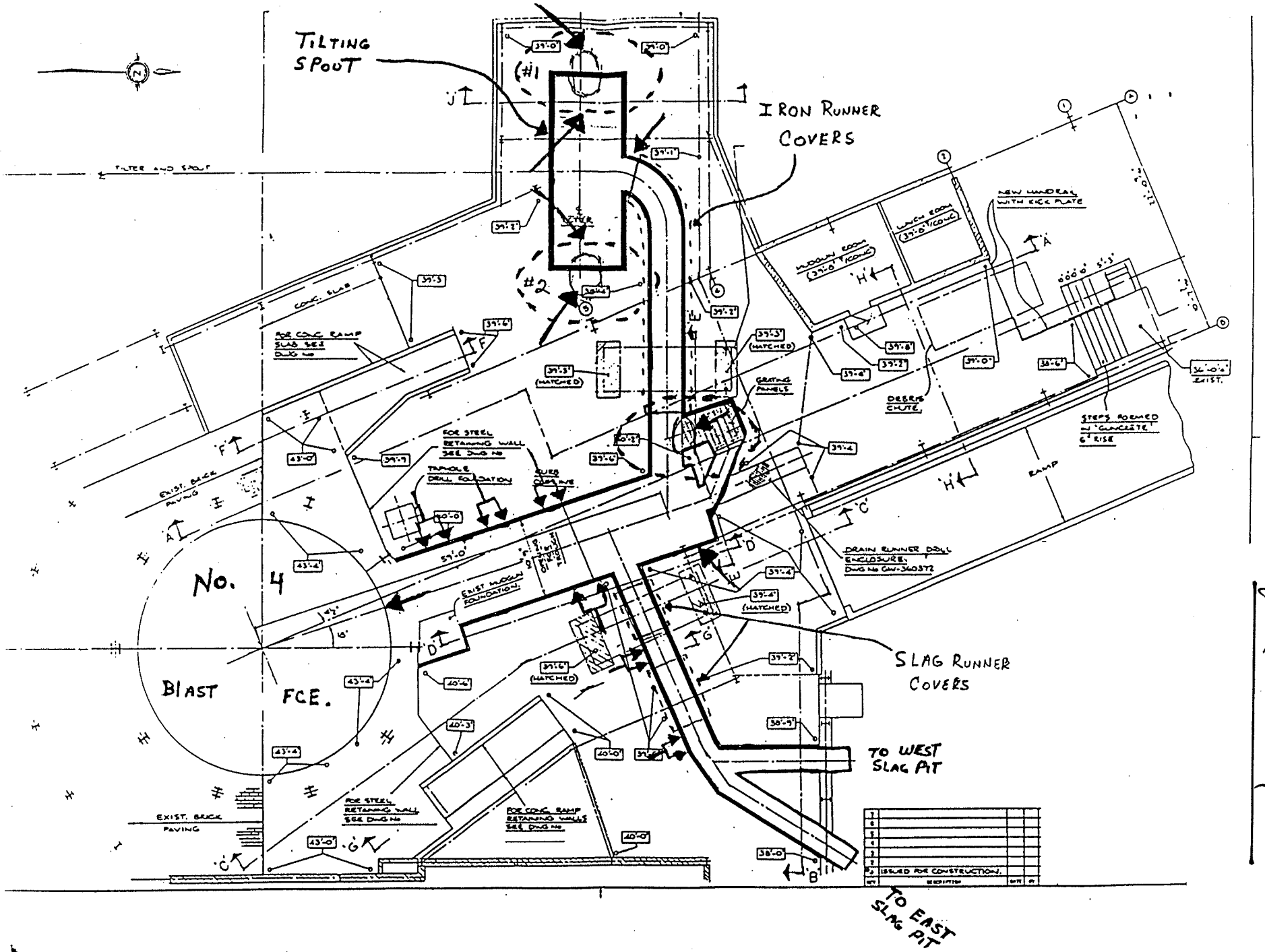


20 NATURAL GAS LANCES

ISX 7-17

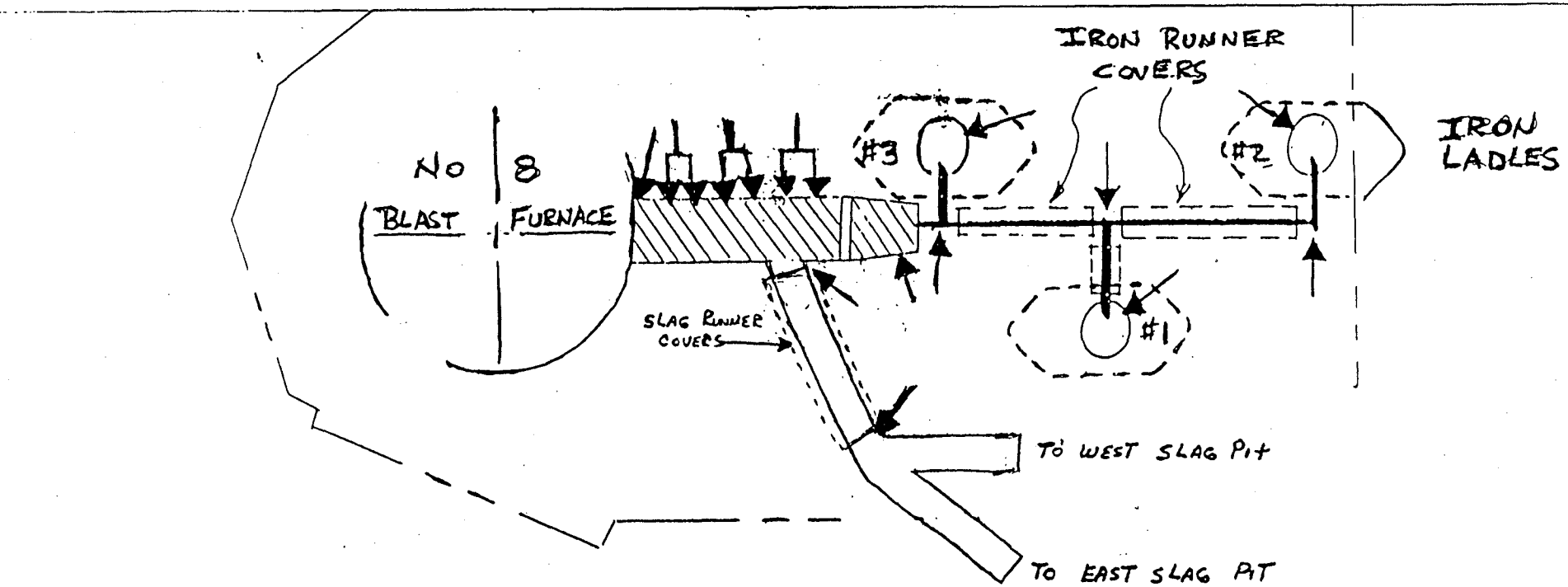


→ 16 NATURAL GAS LANCES

NO. 8 BLAST FURNACE
CASTHOUSE EMISSION SUPPRESSION

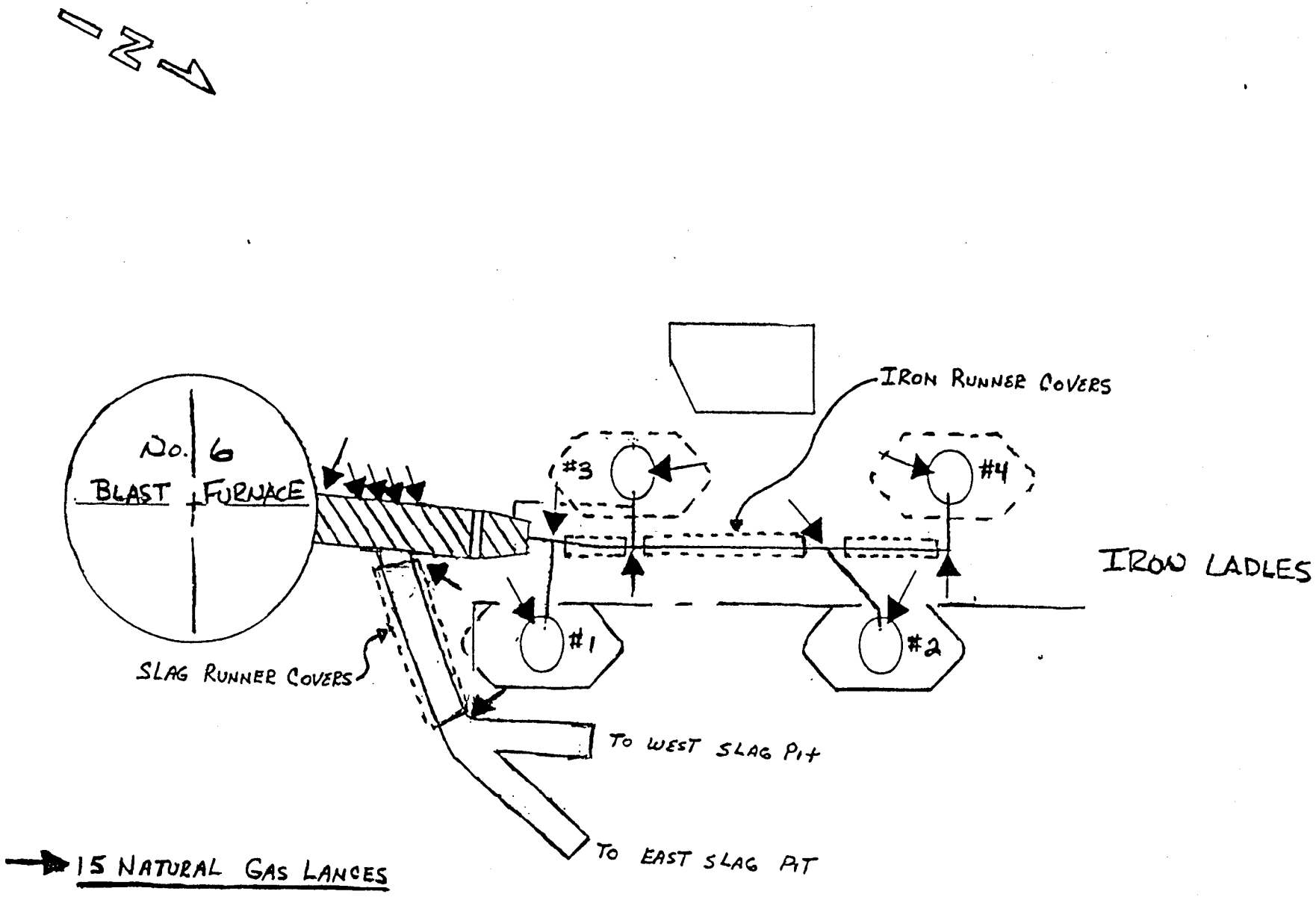


CONFIDENTIAL

GARY WORKS
No. 6 BLAST FURNACE
CASTHOUSE EMISSION SUPPRESSION

CONFIDENTIAL

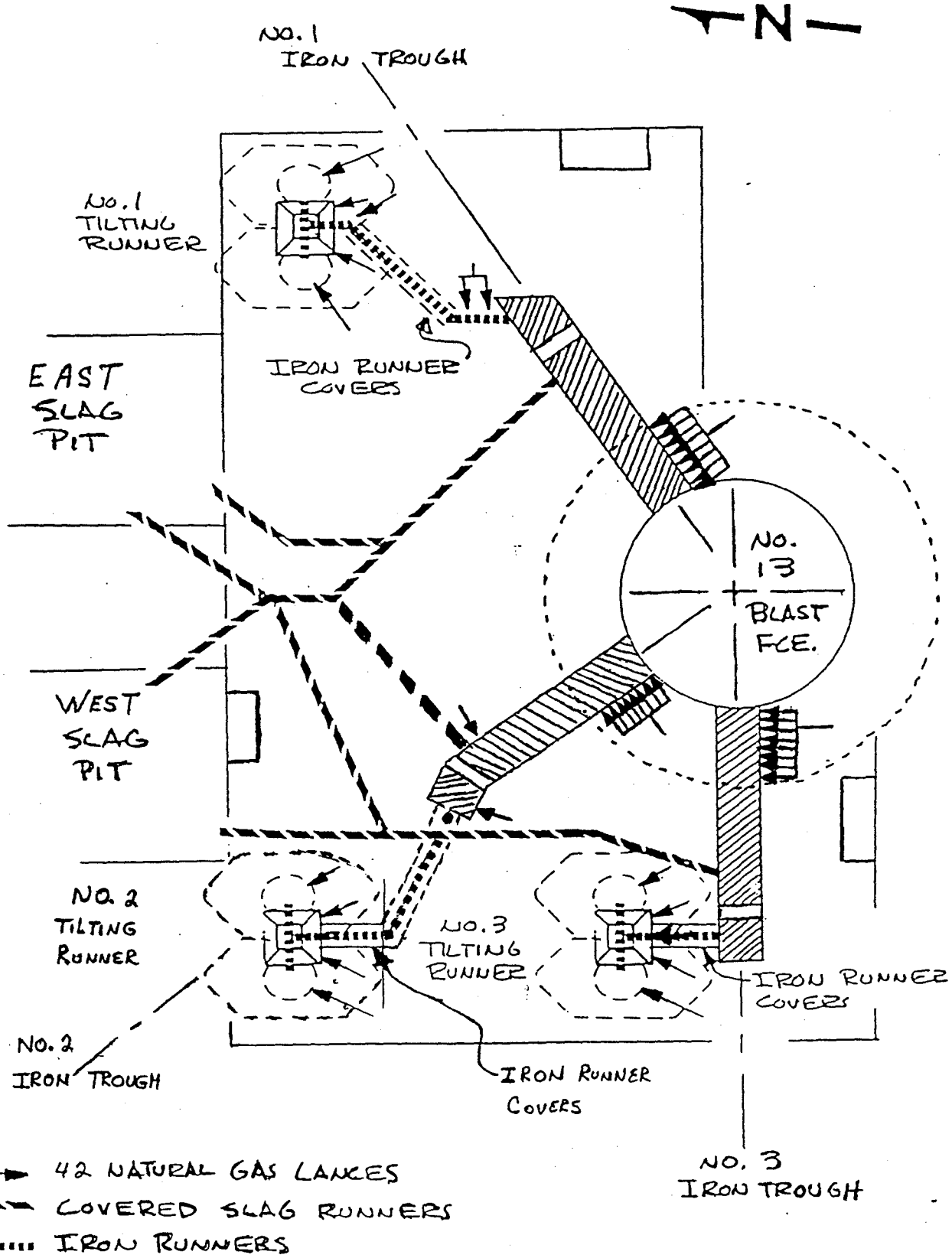


| | | | | |
|---|---|---|---|---|
| REV. 1 | REV. 2 | CONFIDENTIAL | GARY WORKS NO. 13 BLAST FURNACE | ELEMENTARY DIAGRAM CAST HOUSE EMISSION SUPPRESSION |
| DRAWN | PRINTS TO | | | |
| DRAWN BY | | | | |

Incident No. 0445

USS - Gary Works
Environmental Incident Report

| | |
|---|---|
| **nstructions To Energy Load Dispatcher:** | **This is part of a reporting system used for minimizing recurrence, expediting corrective action, and complying with legal requirements associated with environmental incidents. Complete this form immediately upon receipt of verbal report.** |

Received by: D. Good Date: 12-29-93 Time: 8:19 A

Received from: Bartly Division: Oper. Serv. Ext: 4341

1. Nature of Incident: Fuel Oil spill - Area Diked around Tank

2. Time Incident Began: Unknown, Ended

3. Exact Location: Bulk Oil Storage.

4. Cause of Incident: Overflow Due To Steam leak.

5. What Control and Countermeasures Have Been Taken? #13 Bl. fce. Mtce. called.

6. Who Was Contacted? G. Rosenow.

| Name | Plant Phone | Home Phone |
|---|---|---|
| P. K. Murphy | 3383 | 219-464-9513 |
| R. L. Chapman | 3029 | 219-884-7861 |
| G. M. Rosenow | 3369 | 708-424-6383 |
| V. V. Nordlund | 3385 | 219-464-1536 |
| D. C. Behrens | 3258 | 312-474-2328 |
| J. J. Exl | 4563 | 219-988-2174 |
| R. D. Dunham | 4500 | |

USX-7-20

cc DCBehrens
RDDunham
JJExl
VVNordlund
Division Manager

EIR

FINAL

# INCIDENT WITHOUT INJURY

Plant: Gary Works

Date & Time: 12/29/93

Facility Involved: 4 Million Gallon Oil Tank

Location: Directly North of Q-BOP Caster Offices

Damage to Equipment: Loss of Recycle Oil, Possible Loss of Foam Line for Fire Fighting

Description of Incident:

Contractor Mike Boyd of AB Consulting took his morning draw sample from the furnace pump at 6:00 AM and made his rounds. About 7:30 AM he noticed oil spewing from the tank drain on the West side of the tank near the top. He immediately ran to the phone and called #13 Maintenance Supervisor, S. Cucuz, who appeared minutes later, appraised the situation, and called for more help from #13.

Joe Danyi, Maintenance Supervisor, of #13, appeared in minutes and immediately started checking the valves for leakage and making sure the proper lines were open. He was joined by several Maintenance personnel almost immediately and by 9:00 AM a full compliment of #13 Maintenance and Operating, South Furnace Maintenance and Operating, and Environmental Compliance personnel were on the scene. The decision was made to close down all valves and lines leading into the tank to seal the tank off. This included all furnace pumps, recirculation pumps, and all steam lines which led to the tank. The flow from the drain continued unabated.

At approximately 10:00 AM Joe Danyi and John Pawlak noticed icicles on the fire suppression line at the top of the tank and traced the line back to the fire control building. Upon opening the doors they noted the water valve open, the water line leaking, and ice buildup in the room, and the alarm tripped. They immediately shut the valve and a few minutes later the flow from the drain began to ebb. The Fire Department was called and upon their arrival they noted the same conditions in the fire control room.

The investigating committee (attached list) obtained the following facts during the investigation:

1. The water valve in the fire control room was in the open position, dumping water into the tank, and the valve trim manual pull box seal had been broken. This is a manually activated system. Once activated, it requires considerable effort to de-activate it. Spontaneous activations is possible only if the 1/4" pilot lines on either side of the valve lose pressure.

2. A report to Phone Repair had reported the line out of service in August. The phone line was put back in service in October. When the line was put back in service a phone junction box was damaged and not properly repaired. This caused intermittent phone problems with the fire communication line.

3. The intermittent phone problems were not addressed.

4. The local bell alarm on the fire control room was inoperative, the bell was removed sometime after October 7, 1993. This being a remote unmanned area, even if the bell had operated no one may have heard it.

5. On 12/28/93 at 6:30 AM the tank level was checked and registered at 29 feet, 1 inch, or 2,460,450 gallons. The tank drain is at the 45 feet, 10 inch level, or 3,877,500 gallons. This is a difference of 16 feet, 9 inches, or 1,417,050 gallons. The Fire Department manual lists the water lines as conveying 1680 gallons per minute or 100,800 gallons per hour. This means that the water was turned on at least 14 hours before the overflow was discovered. The oil pooled in the containment dike was 4 to 12 inches deep, which leads investigators to believe the water was turned on between 11:00 AM and 2:00 PM on 12/28/93.

6. No fires have been reported in the tank and no personnel in the Fire Department, Iron Producing, or AB Consulting had knowledge of the water being turned on.

7. The fire suppression building doors were not locked, allowing unrestricted access to the building.

Two scenarios exist as why the fire suppression system was activated. The first or most obvious: some unknown person entered the unlocked door of the fire suppression building, broke the seal and activated the clapper valve releasing containment pressure to the top of the oil tank.

A second possibility was that the pilot lines that activate the clapper pressure valve froze and allowed pressure to release. This was simulated on January 5, 1994 to attempt to recreate the incident. The lines were simulated frozen for 18 hours and the clapper valve did not activate. It is unlikely that a frozen line was the mechanism of failure.

Recommendations to prevent recurrence

1. Remove outside pull box. Responsibility Joe Danyi by 12-30-93. Complete.
2. Leave tank valve in off position and install lock on building door. Responsibility Joe Danyi by 12-30-93. Complete.
3. Install heater in fire control building. Responsibility Joe Danyi by 12-30-93. Complete.
4. Reinstall local alarm with strobe. Responsibility Joe Danyi by 12-30-93. Alarm complete. Fire department to order strobe and deliver 1-30-94.
5. Circulate procedure and keys for lock in #2 recommendation. Responsibility Ed Marshall (Fire Dept) by 12-30-93. Complete. (attached)
6. Clean spillage in dike. Responsibility Jerry Perkins by 1-14-94.
7. Repair telephone alarm for immediate use. Responsibility Ed Marshall and committee by 1-7-94.
8. Request additional security coverage on back turns. Responsibility Ed Marshall by 12-30-93. Complete.
9. AB Consulting to include visual inspections of the fire control building on their daily rounds and reports. Responsibility Allen Boyd by 12-30-93. Complete.
10. Remove water from tank either by reprocessing or other methods. Responsibility John Jansen by 2-28-94.
11. Investigate use of tamper alarm on water valve in fire control building as additional safety measure. Responsibility Joe Danyi by 1-30-94.
12. Investigate status of foam line and make repairs as weather permits. If foam line is usable, refill with foam. Responsibility Ed Marshall by 1-30-94.
13. Develop method of sealing pipes where they are placed through the containment dike to prevent any leakage from dike. Engineering to be contacted for assistance. Responsibility John Jansen by 1-30-94.
14. Install four spot lights around the tank to allow for better viewing on back turns and during inclement weather. Responsibility #13 mtce by 2-15-94.

File

U. S. Steel
Gary Works
One North Broadway
Gary, IN 46402-3199

January 7, 1994

Mr. Dave Daugherty
Indiana Department of
Environmental Management
Office of Environmental Response
Emergency Response Branch
100 North Senate Avenue, P. O. Box 6015
Indianapolis, Indiana 46206-6015

Re: Oil Spill Incident # 9312184

Dear Mr. Daugherty:

This is forwarding the required report for the above subject spill incident.

On Wednesday, December 29, 1993 at approximately 7:30 AM, the attendant at the blast furnace bulk oil storage facility was making routine observations when he noticed oil flowing from an overflow drain near the top of the four million gallon tank. He immediately called blast furnace maintenance personnel, who in turn contacted the Gary Works Load Dispatchers and subsequently, the Environmental Compliance department in accordance with the established reporting procedure. The maintenance personnel proceeded to investigate the valve arrangements while others went to the spill site.

Initially it was thought that a steam heater coil inside the tank had ruptured, and that the oil was being displaced by rising water levels as the escaping steam condensed. All the valves feeding steam to the tank were closed, and power to all pumps in the pumproom was shut down. However, the oil flow from the overflow drain was undiminished. Through further investigations the response team discovered that the fire suppression system located inside a small building on the southeast side of the tank had been manually activated, and was feeding water to the tank at a rate of 1,680 gallons per minute. The oil was being displaced at a similar rate by the rising water levels. A local bell alarm on the fire control system had been tripped; however, the bell which was removed three weeks earlier to allow repairs to the roof of the building had not yet been replaced. The flow from the tank began to subside within minutes of shutting down the fire control system.

A preliminary estimate of 230,000 gallons of oil was released to the secondary containment dike surrounding the tank. All of the spilled oil was contained within the dike, except for a small portion that was found seeping through the sleeve of a pipeline that runs through the dike from the tank to the adjacent pumproom. No oil entered plant sewers that discharge to Lake Michigan or the Grand Calumet River.



Steel the recycled material

The spilled oil is being pumped from the secondary containment structure and is being reprocessed by an on-site contractor. We have yet to decided how the oil residues in the diked area will be cleaned; we are considering several options, and it is likely that no activity will begin until we experience warmer weather.

In order to prevent a recurrence of this incident, we have reinstalled the local bell alarm with an added strobe light to attract visual attention; installed a padlock on the door of the fire control system building and distributed keys only to personnel responsible for the operation; and we have requested additional security coverage at the facility during backturns.

If you need additional information or have questions regarding this incident, please phone Rick Chapman at (219) 888-3029.

Very truly yours,

V. V. Nordlund

V. V. Nordlund
Area Manager,
Environmental Compliance

VVN:rlc

Steel
the recycled material

EE

Received 3/2/94

# INDIANA DEPARTMENT OF ENVIRONMENTAL MANAGEMENT

*We make Indiana a cleaner, healthier place to live*

*Evan Bayh*
Governor
*Kathy Prosser*
Commissioner

105 South Meridian Street
P.O. Box 6015
Indianapolis, Indiana 46206-6015
Telephone 317-232-8603
Environmental Helpline 1-800-451-6027

February 21, 1994

U. S. Steel
1 N. Broadway
Gary, IN 46402

Attention: Glen Rosenow

Re: Used Oil Spill

Dear Mr. Rosenow:

On December 29, 1993, this office received notification stating that you were responsible for a spill as defined by 327 IAC 2-6.

Pursuant to 327 IAC 2-6-2(5), a narrative spill report which includes the following information concerning the incident must be submitted to this office within 10 days of the receipt of this letter.

- -product name/description
- -date and time of spill
- -cause of spill
- -spill location; please include site specific map with address and zip code
- -description of area affected, mention square feet or cubic feet
- -amount spilled
- -amount recovered
- -containment & cleanup activities (with dates)
- -disposal of recovered material
- -who was at the scene; name, organization, position
- -do you have a contingency plan; if so, was it implemented
- -list preventive measures to eliminate recurrence
- -respondent's signature and position with company
- -in your correspondence, please refer to Incident No. 9312184

If you have any questions concerning the above matter, please contact me at 317/233-6381.

Sincerely,

David Daugherty 2/22/94
Emergency Response Section

An Equal Opportunity Employer
*Printed on Recycled Paper*

# 1.0 INTRODUCTION

The Texas Nuclear Corporation MND MOLA system uses the thermalization of high energy neutrons to determine the presence of moisture or other hydrogen-bearing material in a process material. The signal from the MND MOLA indicates the presence of hydrogen bearing material. The intensity of that signal is proportional to the hydrogen density.

A MND MOLA system consists of a moisture gauge head and a transmitter. The gauge head contains the neutron source, source shielding, two Texlium He-3 thermal neutron detectors, the preamplifier and the power supply for the detectors. The transmitter is a microprocessor based system which processes the detector signals. The transmitter provides output signals which show the presence of hydrogen bearing material.

The moisture gauge is responsive to the total moisture content of the process material. In applications where weight percent moisture is needed an optional density gauge is added to the system.

## 1.1 Moisture Sensor

The moisture sensor is usually mounted to the outside wall of a bin or hopper. High energy (fast) neutrons from the source in the moisture gauge head pass through the vessel wall and lose energy by collisions with the nuclei of the various elements in the process material. Since the mass of a hydrogen nucleus is very close to that of a neutron, it takes only a few collisions with hydrogen for the neutron energy to be reduced to a low value (thermalized). It takes many collisions with non-hydrogen bearing material to be thermalized. Some of these thermalized neutrons are scattered back into the detectors in the moisture gauge head where they produce electrical pulses. The rate at which these pulses are produced in the detector is proportional to the amount of hydrogen in the process material. Thus, the neutron counting rate will be a measure of moisture concentration (hydrogen content) in the process material. These pulses (counts) are amplified by the preamp and sent to the transmitter.

## 1.2 Density Sensor (Optional)

The density sensor consists of a source head and detector, ion chamber or scintillation, mounted on opposite sides of the hopper. A beam of gamma radiation from a radioisotope source in the source head passes through the material and is detected by the detector on the opposite side. The intensity of the gamma radiation reaching the detector is a function of material density i.e. the intensity of the radiation that reaches the detectors will decrease as the density of the material increases. This signal is converted into a dc voltage level and sent to the transmitter.



USX 7-21

first paragraph of the appendix and labeled 41.22 (d)(1). All following paragraphs of the Appendix pertain to the issuance of that license and the regulatory responsibility of the user.

## 8.4 Radioactive Sources and Shielding

The radioactive materials are doubly contained in stainless steel capsules with welded closures. The capsules are mounted in source holders which are secured firmly in the source head.

### 8.4.1 Moisture Head

The moisture head contains a fast-neutron source (Am-Be) and solid shielding material (a type of polyethylene) to reduce radiation external to the heads to a safe level. Also in the heads is a detector module which may be removed for service by unlicensed personnel. A two position shutter is operated by a lever on top of the head. A mechanical interlock prevents removal of the detector module when the shutter is open.

### 8.4.2 Density-Sensor Head

This head contains a gamma-ray source (Cesium-137) and lead shielding to reduce radiation external to the head to safe levels. The rotary shutter is opened and closed by turning a large handwheel on the rear of the head. Some heads are fitted with power interlocked shutters and shutter position switches similar to those used on the moisture head.

## 8.5 Leak Test

Regulations require periodic leak testing of heads which contain sources. The test is done by wiping specified areas of the surface of the head with moistened swabs, then analyzing the swabs in the laboratory to see if they have picked up any radioactive contamination.

Leak tests may be made by user's personnel without special training or license, using a kit ordered from Texas Nuclear Corporation. The swabs are returned to Texas Nuclear for analysis. Alternatively the test may by done by any of several radiation-safety firms which offer such services.

## 8.6 Additional Safety Notes

1) In the event of an accident, fire or explosion that may have damaged the source housing or shutter mechanism, notify the regulatory authorities listed in your license and Texas Nuclear. Personnel should be kept a reasonable distance away from the gauge until it has been determined by appropriate measurements that the area is safe. Such measurement must be made by personnel fully trained in the use of survey

NOTES:

① NORMALLY SUPPLIED MOUNTED ON WEAR LINER MOUNTING BRACKET

② SPRING ANCHOR ASSY. CONSISTS OF:

| | |
|---|---|
| BAR, SPRING ANCHOR | 1 |
| RETAINER, SPRING | 3 |
| SCREW, 5/16-18 x 1 S.S. HEX HEAD | 3 |
| SCREW, 5/16-18 x 1 S.S. SOCKET HEAD | 7 |
| WASHER, 5/16 S.S. LOCK | 7 |

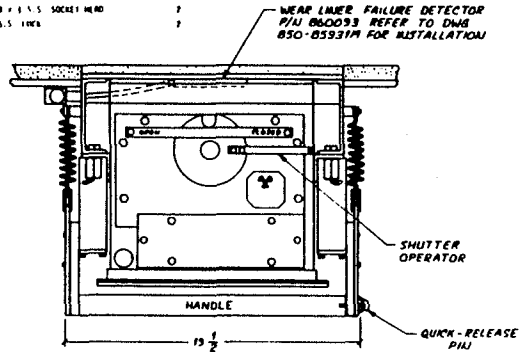


VIEW D

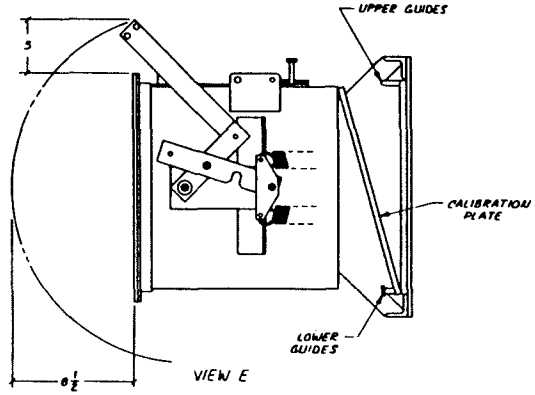


VIEW E

## INSTALLATION INSTRUCTIONS

All parts not listed in parts list are normally supplied assembled on the gauge head.

After the wear liner mounting bracket is installed (refer to dwg. 09933M), the Quick-Cal system may be installed as follows. If wear liner failure detector is required, position the wear liner failure detector in the mounting bracket as per Dwg. 09933M and secure by loosely attaching the four guides on the mounting bracket as per View E on Dwg. 866725. To align the guides, i.e. calibration plate(s), with the mounting bracket, place a calibration plate (preferably the thickest) on the guides so that the contoured edges of the plate engages the guides. Adjust the two lower guides so that the calibration plate is centrally positioned in the mounting bracket and secure the lower guides. Align the two upper guides with contoured edge of the plate with just enough clearance to allow the plate to disengage freely from the upper guides and secure the upper guides. Remove the calibration plate. Mola - the wear liner failure detector should be maintained in the current position during the above installation.

Next install the two spring anchor assemblies with quick-acting nuts on the side rails of the wear liner mounting bracket as shown (refer to view A on Dwg. 866725). Notice that the mounting holes at the ends of the spring anchor bar are offset 1/16 in from the longitudinal centerline of the bar. The anchor assemblies should be mounted so that the direction of hole offset is away from the bracket mounting surface, i.e. the hopper wall. Loosen the screws securing the four spring retainers until the retainers can be disengaged from the socket screw heads. Also remove the protective PVC sleeves from the two bearing rods.*

Remove the plastic plugs (if on./housing) from parts of the two bearing housings * to mount the gauge head, place the head, i.e. bearings, on the bearing rods and against the side rails of the mounting bracket and secure with the four quick-acting nuts. Rotate the handle to the approximate position to mount the springs adjacent to the spring anchor assemblies. Place the end loop of the springs over the socket screw heads of the anchor bars and replace the spring retainers to secure them.

Remove the cover and gasket from the rear end of the bearing housings to expose the end of the bearing rod. Install the retaining washer on the end of the bearing rod with 1-20 x 3/4" F.S. socket flat head screw. Recommend using loctite screw lock and (thick grade 4 primer on retaining washer screw. Replace cover and gasket on bearing housings.

Move handle to (1) lowest position and secure by inserting the quick-release pin thru the side of the handle (refer to C & D on Dwg. 866725)

The gauge head with the Quick-Cal system is now installed.

*Notes - to prevent contamination and damage to the bearings and bearing rods, the sleeve and protection sleeves should not be removed until just before the gauge head is mounted.

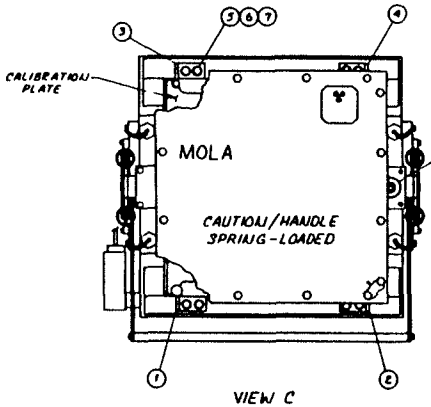


VIEW C

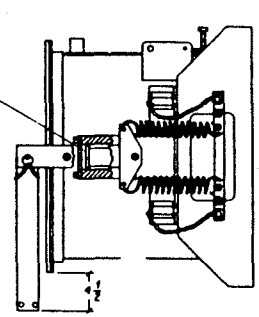


VIEW B

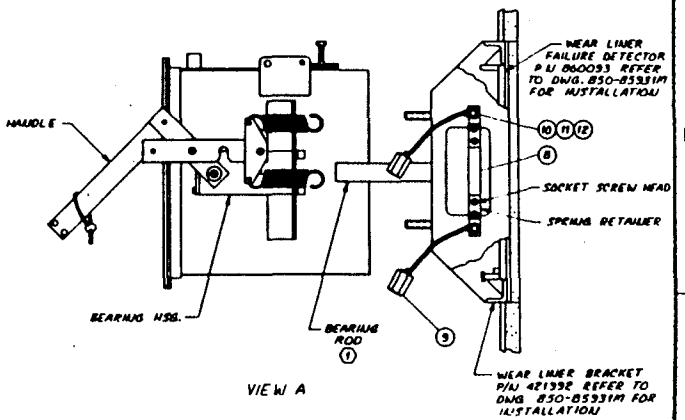


VIEW A

PARTS LIST

| ITM. | DESCRIPTION | P/N. | QTY. |
|---|---|---|---|
| 1. | L. LOWER GUIDE | | 1 |
| 2. | R. LOWER GUIDE | | 1 |
| 3. | L. UPPER GUIDE | | 1 |
| 4. | R. UPPER GUIDE | | 1 |
| 5. | SCREW, 1-20 x 1" S.S. HEX HEAD CAP | | 8 |
| 6. | WASHER, 1" S.S. LOCK | | 8 |
| 7. | WASHER, 1" S.S. FLAT | | 8 |
| ② 8. | SPRING ANCHOR ASSY. | | 2 |
| 9. | QUICK-ACTING NUT | | 2 |
| 10 | SCREW, 5/16-18 x 1½" S.S. HEX HEAD CAP | | 4 |
| 11 | WASHER, 5/16 S.S. LOCK | | 4 |
| 12 | NUT, 5/16-18 S.S. HEX | | 4 |
| 13. | RETAINING WASHER | | 2 |
| 14. | SCREW, 1-20 x 3/4" S.S. HEX SOCKET F.H. | | 2 |
| 15. | CALIBRATION PLATE SET (1/16", 1/8" & 1/4") | | 1 |

| LTR | DESCRIPTION | DATE | APPROVED |
|---|---|---|---|
| A | ECO 1655 | 19 Apr 84 | |
| — | RELEASED | 25 Jan 84 | |

REVISIONS

THIS DOCUMENT CONTAINS PROPRIETARY INFORMATION OF TEXAS NUCLEAR AND IS FURNISHED TO THE CUSTOMER FOR INFORMATION PURPOSES ONLY. IT IS REQUESTED THAT THIS DOCUMENT NOT BE REPRODUCED IN ANY WAY WHATSOEVER IN WHOLE OR IN PART OR DISTRIBUTED OUTSIDE OF THE CUSTOMER ORGANIZATION WITHOUT PRIOR OBTAINING THE EXPRESS WRITTEN AUTHORIZATION OF TEXAS NUCLEAR. THIS DOCUMENT IS THE PROPERTY OF TEXAS NUCLEAR AND IS RETURNABLE UPON REQUEST OF TEXAS NUCLEAR.

REDUCED PRINTS INCLUDED AS AN INTEGRAL PART OF AN INSTRUCTION MANUAL MAY NOT BE UP TO DATE AND SHOULD BE USED FOR GENERAL INFORMATION PURPOSES ONLY.

DRWN CDS 19 Apr 84
CHK
ENG
GENERAL DIMENSIONS
DIMS ± 1/64 (.016)
DIMS (DEC) ± .005 (.13)
UNIT WEIGHT (LBS) LBS.
SYSTEMS

TITLE INSTALLATION OF MOLA GAUGE HEAD W/QUICK-CAL SYSTEM

SCALE NONE | THIRD ANGLE PROJECTION
UNIT | SIZE D | DRAWING NO D866725 | REV A

7.4.2 Moisture Head

**Detector:**

**Type** - 2-Texlium (He-3) proportional counters.

**Maximum distance to transmitter** - 2500 ft (750 M)

**Operating Ambient Temperature:** -30 to 100°C (at face)

**Power Requirements** - 115/230 VAC $\pm$ 10%, 50 or 60 Hz

**Transmitter Cable** - One standard, foil shielded, pair (22 gauge or larger) example; Alpha 6510/2201.

**Circuitry** - Preamplifier and all power supplies.

**Construction** - Designed to meet Class I, Class II, Group C,D, Division 2 FM Approval explosion proof. Weather tight, all solid shielding. Contains preamplifier and power supply. Each easily serviced without gauge head removal from vessel wall. Weight = 160 lb.

**Process Simulator** - Manually inserted process simulator to confirm proper operation of system by imposing hydrogenous material in front of gauge head during empty vessel condition.

**Source:** Maximum of 1000 mCi $^{241}$Am-Be

**Radiation Level:** Less than 5 mR/hr at one foot or more from the gauge head. Design meets or exceeds requirements of state licensing agencies, the NRC and the DOT.

**Optional Equipment:** Shutter position indicator switches, power controlled shutter.

7.4.3 Density Detector and Source Head (Optional)

**Detector:**

**Type** - Ion chamber or Scintillation

**Maximum Distance to Transmitter** - 5000 ft (1400 M)

**Operating Ambient Temperature:** - 30 TO 60°C

# LIGHTING INSTRUCTIONS

## FOR

# JOHN ZINK WASTE GAS FLARE ASSEMBLIES

1. Purge flare with nitrogen or natural gas until all oxygen has been replaced with purge gas.
2. Blow down air and gas lines to flame front generator at blow down valves to remove condensate.
3. Push Switch "F" or actuate lever on Magiclite to check for spark at the sight port.
4. Open Valves "A" and "B" for straight through flow. This flow will operate Pilot No. 1.
5. Open Valve "C". This is fuel for pilots.
6. Open Valve "D" and set 10 psig (air).
7. Open Valve "E" and set 10 psig (gas).
8. Purge two to three minutes (gas-air mixture to flame front ignitor tip). Purge time will depend on distance from flame front generator to flare pilot tip.
9. Push Switch "F". Spark to light mixture. Do not hold switch in – push and release quickly.
10. If pilot does not light, repeat 8 and 9.
11. If repeating 8 and 9 two or three times does not light pilot, change air pressure slightly with Valve "D" on lower pressure. Repeat 8 and 9; or, increase pressure and repeat until pilot lights.
12. Close Valve "A". This will supply Pilot No. 2. Repeat 8 and 9.
13. Close Valve "B". This will supply Pilot No. 3. Repeat 8 and 9.
14. If system uses Magiclite ignitor, pull lever as if you were using Switch "F".
15. When all pilots are lighted, close Valves "D" and "E".
16. On light or sunny days, it is difficult to observe pilot flame to verify pilot flame. Close Valve "D", open Valve "E" to 25 psig for two to three minutes, pilot flame will become luminous. This can be repeated for each pilot by opening and closing Valves "A" and "B".
17. After all pilots are lighted and ignition verified, flare gas valve may be opened.

LLSx 7-23

# GENERAL INSTRUCTIONS

If no spark is observed, check the electrical circuit and the spark gap.

If a blue flash cannot be observed at the sight glass, check for gas and air delivery.

Disconnect spark lead and remove sight glass and check for air delivery and gas delivery individually.

If a noticeable hiss does not occur, break the piping union and clean ignition chamber at "H" and "J"

A drain should be installed in the flame front lines between the flame front generator and pilots.

The drains may be plugged and the lines may be filled with condensate.

Orifices "H" and "J" are sized for gas having a specific gravity of .6. To find the proper pressure for fuels having a specific gravity other than .6, set the air at 10# and with the push button "F" pressed in, start decreasing and/or increasing the fuel gas pressure until burning is observed through the sight port. This will give you the fuel pressure required for the different specific gravities.

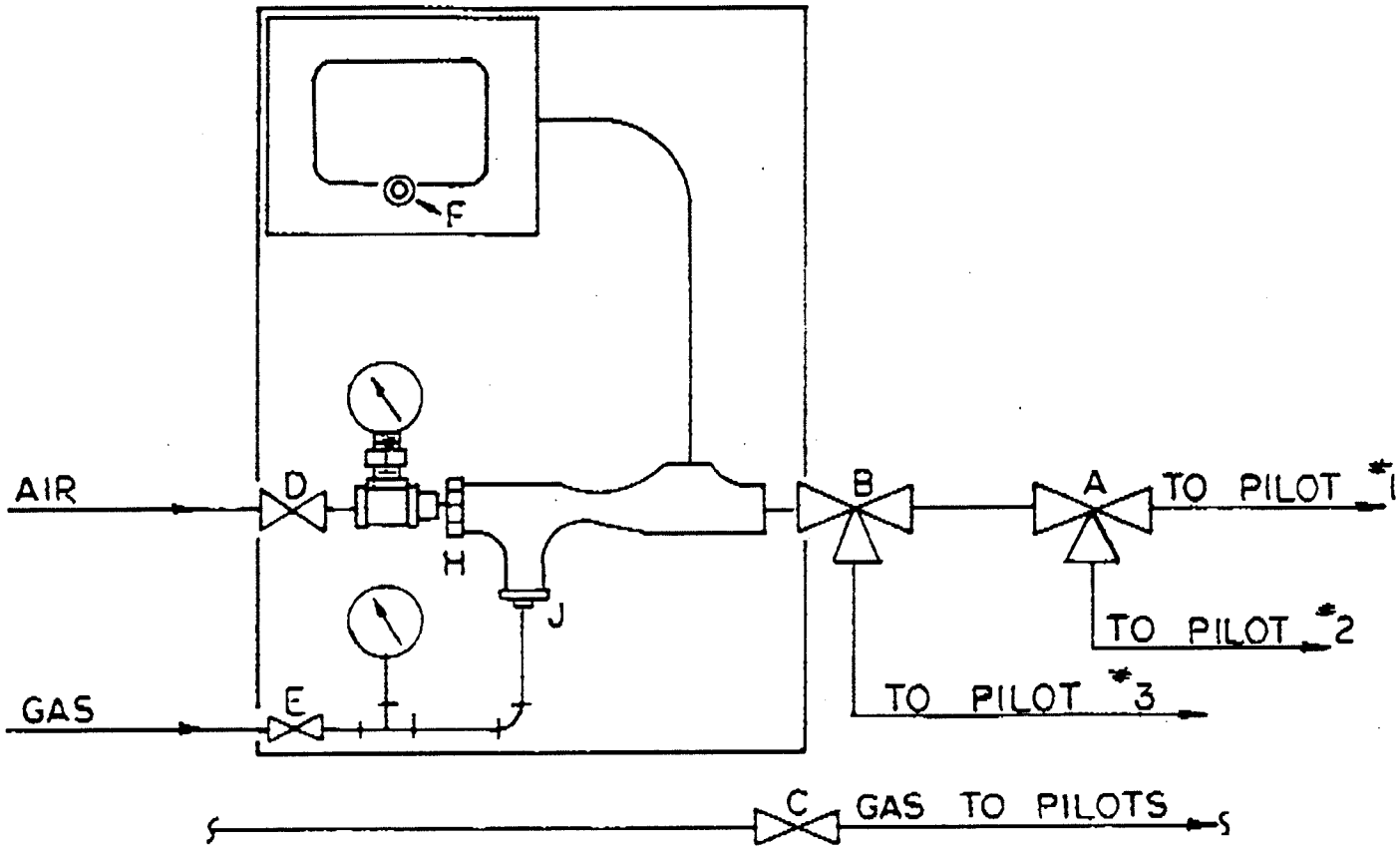


**JOHN ZINK COMPANY**

**4401 South Peoria** **Phone 918-747-1371**

**TULSA, OKLAHOMA 74105**