US STEEL GARY WORKS
CONSTRUCTION PERMIT APPLICATION
NO. 13 BLAST FURNACE RELINE
CHANGE IN HAZARDOUS AIR POLLUTANTS EMISSION RATE
All Additional Hot Metal Through No. 2 Q-BOP

Hazardous Air Pollutant: Hexane

Source Description	Change in Emission Rate	
	(tons/yr)	(lbs/hr)
No. 13 Blast Furnace Stoves (BFG)	8.05E-05	1.84E-05
No. 13 Blast Furnace Stoves (NG)	6.62E-03	1.51E-03
TBBH Boilers (BFG)	2.24E-04	5.12E-05
Totals	0.0069	0.0016

US STEEL GARY WORKS
CONSTRUCTION PERMIT APPLICATION
NO. 13 BLAST FURNACE RELINE
CHANGE IN HAZARDOUS AIR POLLUTANTS EMISSION RATE
All Additional Hot Metal Through No. 1 BOP

Hazardous Air Pollutant: Hydrogen Sulfide

Source Description	Change in Emission Rate	
	(tons/yr)	(lbs/hr)
No. 13 Blast Furnace Slag Granulator	0.3575	0.0816
Totals	0.3575	0.0816

US STEEL GARY WORKS
CONSTRUCTION PERMIT APPLICATION
NO. 13 BLAST FURNACE RELINE
CHANGE IN HAZARDOUS AIR POLLUTANTS EMISSION RATE
All Additional Hot Metal Through No. 2 Q-BOP

Hazardous Air Pollutant: Manganese

Source Description	Change in Emission Rate	
	(tons/yr)	(lbs/hr)
No. 13 Blast Furnace Casthouse Baghouse	6.52E-04	1.49E-04
TBBH Boilers (BFG)	2.46E-03	5.63E-04
No. 2 Caster Mold Baghouses	6.81E-06	1.56E-06
No. 2 QBOP HM Desulfurization Baghouse	1.10E-03	2.52E-04
No. 2 QBOP Secondary Emissions Baghouse	3.88E-03	8.85E-04
No. 2 QBOP Gas Cleaner	5.95E-03	1.36E-03
No. 1 LMF Fume Exhaust Baghouse	7.09E-03	1.62E-03
No. 2 LMF Fume Exhaust Baghouse	7.09E-03	1.62E-03
No. 3 LMF Fume Exhaust/Mat. Handling Baghouse	3.68E-03	8.39E-04
No. 1 BOP HM Desulfurization Baghouse	0.00E+00	0.00E+00
No. 1 BOP Gas Cleaner	0.00E+00	0.00E+00
No. 1 BOP CAS Bell/OB Lancing Baghouse	0.00E+00	0.00E+00
No. 13 Blast Furnace Stoves (NG)	1.40E-06	3.19E-07
No. 13 Blast Furnace Stoves (BFG)	8.84E-04	2.02E-04
No. 13 Blast Furnace Slag Pit Operations	3.78E-03	8.62E-04
Totals	0.0366	0.0083

US STEEL GARY WORKS
CONSTRUCTION PERMIT APPLICATION
NO. 13 BLAST FURNACE RELINE
CHANGE IN HAZARDOUS AIR POLLUTANTS EMISSION RATE
All Additional Hot Metal Through No. 2 Q-BOP

Hazardous Air Pollutant: Lead

Source Description	Change in Emission Rate	
	(tons/yr)	(lbs/hr)
No. 13 Blast Furnace Casthouse Baghouse	7.84E-06	1.79E-06
No. 13 Blast Furnace Stoves (BFG)	7.79E-06	1.78E-06
TBBH Boilers (BFG)	2.17E-05	4.96E-06
No. 2 Caster Mold Baghouses	1.67E-07	3.81E-08
No. 2 QBOP HM Desulfurization Baghouse	2.40E-05	5.48E-06
No. 2 QBOP Secondary Emissions Baghouse	4.32E-04	9.87E-05
No. 2 QBOP Gas Cleaner	1.60E-03	3.65E-04
No. 1 BOP HM Desulfurization Baghouse	0.00E+00	0.00E+00
No. 1 BOP Gas Cleaner	0.00E+00	0.00E+00
No. 1 BOP CAS Bell/OB Lancing Baghouse	0.00E+00	0.00E+00
No. 13 Blast Furnace Slag Pit Operations	3.31E-05	7.55E-06
Totals	0.0021	0.0005

US STEEL GARY WORKS
CONSTRUCTION PERMIT APPLICATION
NO. 13 BLAST FURNACE RELINE
CHANGE IN HAZARDOUS AIR POLLUTANTS EMISSION RATE
All Additional Hot Metal Through No. 2 Q-BOP

Hazardous Air Pollutant: Mercury

Source Description	Change in Emission Rate	
	(tons/yr)	(lbs/hr)
No. 2 Caster Mold Baghouses	2.12E-10	4.85E-11
No. 2 QBOP Secondary Emissions Baghouse	1.22E-06	2.79E-07
No. 1 LMF Fume Exhaust Baghouse	9.74E-09	2.22E-09
No. 2 LMF Fume Exhaust Baghouse	9.74E-09	2.22E-09
No. 3 LMF Fume Exhaust/Mat. Handling Baghouse	5.05E-09	1.15E-09
No. 1 BOP CAS Bell/OB Lancing Baghouse	0.00E+00	0.00E+00
No. 13 Blast Furnace Stoves (NG)	9.56E-07	2.18E-07
Totals	2.20E-06	5.03E-07

US STEEL GARY WORKS
CONSTRUCTION PERMIT APPLICATION
NO. 13 BLAST FURNACE RELINE
CHANGE IN HAZARDOUS AIR POLLUTANTS EMISSION RATE
All Additional Hot Metal Through No. 2 Q-BOP

Hazardous Air Pollutant: Naphthalene

Source Description	Change in Emission Rate	
	(tons/yr)	(lbs/hr)
No. 13 Blast Furnace Stoves (BFG)	5.50E-03	1.26E-03
No. 13 Blast Furnace Stoves (NG)	2.24E-06	5.12E-07
TBBH Boilers (BFG)	1.53E-02	3.50E-03
Totals	2.08E-02	4.76E-03

US STEEL GARY WORKS
CONSTRUCTION PERMIT APPLICATION
NO. 13 BLAST FURNACE RELINE
CHANGE IN HAZARDOUS AIR POLLUTANTS EMISSION RATE
All Additional Hot Metal Through No. 2 Q-BOP

Hazardous Air Pollutant: Nickel

Source Description	Change in Emission Rate	
	(tons/yr)	(lbs/hr)
No. 1 LMF Fume Exhaust Baghouse	2.18E-05	4.98E-06
No. 2 LMF Fume Exhaust Baghouse	2.18E-05	4.98E-06
No. 3 LMF Fume Exhaust/Mat. Handling Baghouse	1.13E-05	2.58E-06
No. 13 Blast Furnace Stoves (NG)	7.72E-06	1.76E-06
No. 13 Blast Furnace Slag Pit Operations	1.94E-05	4.42E-06
Totals	0.0001	0.0000

US STEEL GARY WORKS
CONSTRUCTION PERMIT APPLICATION
NO. 13 BLAST FURNACE RELINE
CHANGE IN HAZARDOUS AIR POLLUTANTS EMISSION RATE
All Additional Hot Metal Through No. 2 Q-BOP

Hazardous Air Pollutant: Polycyclic Organic Matter (POM)

Source Description	Change in Emission Rate	
	(tons/yr)	(lbs/hr)
No. 13 Blast Furnace Casthouse Baghouse	1.17E-06	2.67E-07
No. 13 Blast Furnace Stoves (NG)	3.24E-07	7.41E-08
Totals	1.49E-06	3.41E-07

US STEEL GARY WORKS
CONSTRUCTION PERMIT APPLICATION
NO. 13 BLAST FURNACE RELINE
CHANGE IN HAZARDOUS AIR POLLUTANTS EMISSION RATE
All Additional Hot Metal Through No. 2 Q-BOP

Hazardous Air Pollutant: Quinoline

Source Description	Change in Emission Rate	
	(tons/yr)	(lbs/hr)
No. 13 Blast Furnace Casthouse Baghouse	7.40E-08	1.69E-08
Totals	7.40E-08	1.69E-08

US STEEL GARY WORKS
CONSTRUCTION PERMIT APPLICATION
NO. 13 BLAST FURNACE RELINE
CHANGE IN HAZARDOUS AIR POLLUTANTS EMISSION RATE
All Additional Hot Metal Through No. 2 Q-BOP

Hazardous Air Pollutant: Selenium

Source Description	Change in Emission Rate	
	(tons/yr)	(lbs/hr)
No. 13 Blast Furnace Casthouse Baghouse	6.51E-06	1.49E-06
No. 2 QBOP HM Desulfurization Baghouse	1.57E-06	3.58E-07
No. 1 BOP HM Desulfurization Baghouse	0.00E+00	0.00E+00
No. 13 Blast Furnace Stoves (NG)	8.83E-08	2.02E-08
Totals	0.0000	0.0000

US STEEL GARY WORKS
CONSTRUCTION PERMIT APPLICATION
NO. 13 BLAST FURNACE RELINE
CHANGE IN HAZARDOUS AIR POLLUTANTS EMISSION RATE
All Additional Hot Metal Through No. 2 Q-BOP

Hazardous Air Pollutant: Toluene

Source Description	Change in Emission Rate	
	(tons/yr)	(lbs/hr)
No. 13 Blast Furnace Stoves (BFG)	2.89E-04	6.59E-05
No. 13 Blast Furnace Stoves (NG)	1.25E-05	2.86E-06
TBBH Boilers (BFG)	8.04E-04	1.84E-04
Totals	1.11E-03	2.52E-04

Table A3 - O
US STEEL GARY WORKS
CONSTRUCTION PERMIT APPLICATION
NO. 13 BLAST FURNACE RELINE
CALCULATION OF CHANGE IN HAZARDOUS AIR POLLUTANTS
All Additional Hot Metal Through No. 2 Q-BOP

Emission Unit: Iron Producing
Emission Location: No. 13 Blast Furnace Casthouse Baghouse

Change in PM_{10} Emission Rate (tons/yr)	0.15

Hazardous Air Pollutant	Weight Percent of HAP in Dust	HAP Emission Rate (Based on PM10)	
		(tons/yr)	(lbs/hr)
Antimony	0.001200%	0.00000	0.00000
Arsenic	0.001120%	0.00000	0.00000
Chromium	0.025600%	0.00004	0.00001
Lead	0.005300%	0.00001	0.00000
Manganese	0.441000%	0.00065	0.00015
Selenium	0.004400%	0.00001	0.00000
POM	0.000790%	0.00000	0.00000
Quinoline	0.000050%	0.00000	0.00000
	Totals	0.00071	0.00016

Table A3 - P
US STEEL GARY WORKS
CONSTRUCTION PERMIT APPLICATION
NO. 13 BLAST FURNACE RELINE
CALCULATION OF CHANGE IN HAZARDOUS AIR POLLUTANTS
EMISSION RATE FROM COMBUSTION SOURCES
All Additional Hot Metal Through No. 2 Q-BOP

Emission Unit: No. 13 Blast Furnace
Emission Location: Stoves (NG)

Change in Natural Gas Consumption (MMSCF/yr)	7.36

Hazardous Air Pollutant	Emission Factor (lb/MMSCF)[1]	Change in HAP Emission Rate	
		(tons/yr)	(lbs/hr)
Non-POMs			
Benzene	2.10E-03	7.72E-06	1.76E-06
Dichlorobenzene	1.20E-03	4.41E-06	1.01E-06
Formaldehyde	7.50E-02	2.76E-04	6.30E-05
Hexane	1.80E+00	6.62E-03	1.51E-03
Naphthalene	6.10E-04	2.24E-06	5.12E-07
Toluene	3.40E-03	1.25E-05	2.86E-06
Subtotal Non-POMs		*6.92E-03*	*1.58E-03*
POMs			
2-Methylnaphthalene	2.40E-05	8.83E-08	2.02E-08
3-Methylchloranthrene	1.80E-06	6.62E-09	1.51E-09
7,12-Dimethylbenz(a)-anthracene	1.60E-05	5.89E-08	1.34E-08
Acenaphthene	1.80E-06	6.62E-09	1.51E-09
Acenaphthylene	1.80E-06	6.62E-09	1.51E-09
Anthracene	2.40E-06	8.83E-09	2.02E-09
Benz(a)anthracene	1.80E-06	6.62E-09	1.51E-09
Benzo(a)pyrene	1.20E-06	4.41E-09	1.01E-09
Benzo(b)fluoranthene	1.80E-06	6.62E-09	1.51E-09
Benzo(g,h,I)perylene	1.20E-06	4.41E-09	1.01E-09
Benzo(k)fluoranthene	1.80E-06	6.62E-09	1.51E-09
Chrysene	1.80E-06	6.62E-09	1.51E-09
Dibenzo(a,h)anthracene	1.20E-06	4.41E-09	1.01E-09
Fluoranthene	3.00E-06	1.10E-08	2.52E-09
Fluorene	2.80E-06	1.03E-08	2.35E-09
Indeno(1,2,3-cd)pyrene	1.80E-06	6.62E-09	1.51E-09
Phenanathrene	1.70E-05	6.25E-08	1.43E-08
Pyrene	5.00E-06	1.84E-08	4.20E-09
Subtotal POMs		*3.24E-07*	*7.41E-08*
Metallic HAPs			
Arsenic	2.00E-04	7.36E-07	1.68E-07
Beryllium	1.20E-05	4.41E-08	1.01E-08
Cadmium	1.10E-03	4.05E-06	9.24E-07
Chromium	1.40E-03	5.15E-06	1.18E-06
Cobalt	8.40E-05	3.09E-07	7.05E-08
Manganese	3.80E-04	1.40E-06	3.19E-07
Mercury	2.60E-04	9.56E-07	2.18E-07
Nickel	2.10E-03	7.72E-06	1.76E-06
Selenium	2.40E-05	8.83E-08	2.02E-08
Subtotal Metallic HAPs		*2.05E-05*	*4.67E-06*
	Total HAPs	**6.94E-03**	**1.59E-03**

[1] Emission Factors specified in EPA's AP-42 Section 1.4, July 1998 for Natural Gas Combustio

Table A3 - Q
US STEEL GARY WORKS
CONSTRUCTION PERMIT APPLICATION
NO. 13 BLAST FURNACE RELINE
CALCULATION OF CHANGE IN HAZARDOUS AIR POLLUTANTS
EMISSION RATE FROM COMBUSTION SOURCES
All Additional Hot Metal Through No. 2 Q-BOP

Emission Unit: No. 13 Blast Furnace
Emission Location: Stoves (BFG)

Change in Blast Furnace Gas Consumption (MMSCF/yr)	233

Hazardous Air Pollutant	Emission Factor (lb/MMSCF)[1]	Change in HAP Emission Rate	
		(tons/yr)	(lbs/hr)
Non-POM HAPs			
Acetaldehyde	5.88E-03	6.84E-04	1.56E-04
Acetophenone	1.55E-04	1.80E-05	4.12E-06
Acrolein	3.00E-03	3.49E-04	7.97E-05
Benzene	1.34E-02	1.56E-03	3.56E-04
Benzyl Chloride	7.23E-03	8.41E-04	1.92E-04
DEHP	7.54E-04	8.77E-05	2.00E-05
Bromoform	4.02E-04	4.68E-05	1.07E-05
Carbon Disulfide	1.34E-03	1.56E-04	3.56E-05
Carbonyl Sulfide	9.78E-03	1.14E-03	2.60E-04
2-Chloroacetophenone	7.25E-05	8.43E-06	1.93E-06
Chlorobenzene	2.27E-04	2.64E-05	6.03E-06
Chloroform	6.09E-04	7.08E-05	1.62E-05
Cumene	5.48E-05	6.38E-06	1.46E-06
Dimethyl Sulfate	4.96E-04	5.77E-05	1.32E-05
2,4-Dinitrotoluene	3.10E-06	3.61E-07	8.23E-08
Ethylbenzene	9.71E-04	1.13E-04	2.58E-05
Ethyl Chloride	4.34E-04	5.05E-05	1.15E-05
Ethelyne Dibromide	1.22E-05	1.42E-06	3.24E-07
Ethelyne Dichloride	4.13E-04	4.80E-05	1.10E-05
Formaldehyde	2.48E-03	2.89E-04	6.59E-05
Hexane	6.92E-04	8.05E-05	1.84E-05
Isophorone	5.99E-03	6.97E-04	1.59E-04
Methyl Bromide	1.65E-03	1.92E-04	4.38E-05
Methyl Chloride	5.47E-03	6.36E-04	1.45E-04
Methyl Chloroform (1,1,1-Trichloroethane)	1.49E-04	1.73E-05	3.96E-06
Methyl Ethyl Ketone (MEK)	4.03E-03	4.69E-04	1.07E-04
Methylhydrazine	1.76E-03	2.05E-04	4.67E-05
Methyl Methacrylate	2.06E-04	2.40E-05	5.47E-06
Methyl tert butyl ether	3.61E-04	4.20E-05	9.59E-06
Methylene Chloride	3.00E-03	3.49E-04	7.97E-05
Naphthalene	4.73E-02	5.50E-03	1.26E-03
Phenol	1.65E-04	1.92E-05	4.38E-06
Propionaldehyde	3.92E-03	4.56E-04	1.04E-04
Styrene	2.58E-04	3.00E-05	6.85E-06
Tetrachloroethylene	4.44E-04	5.17E-05	1.18E-05
Toluene	2.48E-03	2.89E-04	6.59E-05
Vinyl Acetate	7.83E-05	9.11E-06	2.08E-06
Xylene	3.82E-04	4.44E-05	1.01E-05
Subtotal of Non-POMs HAPs		*1.47E-02*	*3.35E-03*
Metallic HAPs			
Antimony	2.00E-04	2.33E-05	5.31E-06
Cadmium	5.60E-06	6.51E-07	1.49E-07
Chromium	9.61E-05	1.12E-05	2.55E-06
Cyanide	2.58E-02	3.00E-03	6.85E-04
HCN	2.74E-03	3.19E-04	7.28E-05
Lead	6.70E-05	7.79E-06	1.78E-06
Manganese	7.60E-03	8.84E-04	2.02E-04
Subtotal Metallic HAPs		*4.25E-03*	*9.70E-04*
	Totals	**1.89E-02**	**4.32E-03**

[1] Emission Factors from Ispat Inland HAPs Inventory

Table A3 - R
US STEEL GARY WORKS
CONSTRUCTION PERMIT APPLICATION
NO. 13 BLAST FURNACE RELINE
CALCULATION OF CHANGE IN HAZARDOUS AIR POLLUTANTS
EMISSION RATE FROM COMBUSTION SOURCES
All Additional Hot Metal Through No. 2 Q-BOP

Emission Unit: TBBH Boilers
Emission Location: TBBH Boilers (BFG)

Change in Blast Furnace Gas Consumption (MMSCF/yr)	649

Hazardous Air Pollutant	Emission Factor (lb/MMSCF)[1]	Change in HAP Emission Rate	
		(tons/yr)	(lbs/hr)
Non-POM HAPs			
Acetaldehyde	5.88E-03	1.91E-03	4.35E-04
Acetophenone	1.55E-04	5.03E-05	1.15E-05
Acrolein	3.00E-03	9.73E-04	2.22E-04
Benzene	1.34E-02	4.35E-03	9.92E-04
Benzyl Chloride	7.23E-03	2.34E-03	5.35E-04
DEHP	7.54E-04	2.45E-04	5.58E-05
Bromoform	4.02E-04	1.30E-04	2.98E-05
Carbon Disulfide	1.34E-03	4.35E-04	9.92E-05
Carbonyl Sulfide	9.78E-03	3.17E-03	7.24E-04
2-Chloroacetophenone	7.25E-05	2.35E-05	5.37E-06
Chlorobenzene	2.27E-04	7.36E-05	1.68E-05
Chloroform	6.09E-04	1.98E-04	4.51E-05
Cumene	5.48E-05	1.78E-05	4.06E-06
Dimethyl Sulfate	4.96E-04	1.61E-04	3.67E-05
2,4-Dinitrotoluene	3.10E-06	1.01E-06	2.30E-07
Ethylbenzene	9.71E-04	3.15E-04	7.19E-05
Ethyl Chloride	4.34E-04	1.41E-04	3.21E-05
Ethelyne Dibromide	1.22E-05	3.96E-06	9.03E-07
Ethelyne Dichloride	4.13E-04	1.34E-04	3.06E-05
Formaldehyde	2.48E-03	8.04E-04	1.84E-04
Hexane	6.92E-04	2.24E-04	5.12E-05
Isophorone	5.99E-03	1.94E-03	4.44E-04
Methyl Bromide	1.65E-03	5.35E-04	1.22E-04
Methyl Chloride	5.47E-03	1.77E-03	4.05E-04
Methyl Chloroform (1,1,1-Trichloroethane)	1.49E-04	4.83E-05	1.10E-05
Methyl Ethyl Ketone (MEK)	4.03E-03	1.31E-03	2.98E-04
Methylhydrazine	1.76E-03	5.71E-04	1.30E-04
Methyl Methacrylate	2.06E-04	6.68E-05	1.53E-05
Methyl tert butyl ether	3.61E-04	1.17E-04	2.67E-05
Methylene Chloride	3.00E-03	9.73E-04	2.22E-04
Naphthalene	4.73E-02	1.53E-02	3.50E-03
Phenol	1.65E-04	5.35E-05	1.22E-05
Propionaldehyde	3.92E-03	1.27E-03	2.90E-04
Styrene	2.58E-04	8.37E-05	1.91E-05
Tetrachloroethylene	4.44E-04	1.44E-04	3.29E-05
Toluene	2.48E-03	8.04E-04	1.84E-04
Vinyl Acetate	7.83E-05	2.54E-05	5.80E-06
Xylene	3.82E-04	1.24E-04	2.83E-05
Subtotal of Non-POMs HAPs		*4.09E-02*	*9.33E-03*
Metallic HAPs			
Antimony	2.00E-04	6.49E-05	1.48E-05
Cadmium	5.60E-06	1.82E-06	4.15E-07
Chromium	9.61E-05	3.12E-05	7.12E-06
Cyanide	2.58E-02	8.37E-03	1.91E-03
HCN	2.74E-03	8.89E-04	2.03E-04
Lead	6.70E-05	2.17E-05	4.96E-06
Manganese	7.60E-03	2.46E-03	5.63E-04
Subtotal Metallic HAPs		*1.18E-02*	*2.70E-03*
	Totals	**5.27E-02**	**1.20E-02**

[1] Emission Factors from Ispat Inland HAPs Inventory

Table A3 -S
US STEEL GARY WORKS
CONSTRUCTION PERMIT APPLICATION
NO. 13 BLAST FURNACE RELINE
CALCULATION OF CHANGE IN HAZARDOUS AIR POLLUTANTS
EMISSION RATE FROM PROCESS SOURCES
All Additional Hot Metal Through No. 2 Q-BOP

Emission Unit: Steel Producing
Emission Location: No. 1 BOP HM Desulfurization Baghouse

Change in PM_{10} Emission Rate (tons/yr)	0.00

Hazardous Air Pollutant	Weight Percent of HAP in Dust	HAP Emission Rate (Based on PM10)	
		(tons/yr)	(lbs/hr)
Antimony	0.001900%	0.00000	0.00000
Arsenic	0.003300%	0.00000	0.00000
Chromium	0.021700%	0.00000	0.00000
Cobalt	0.000390%	0.00000	0.00000
Lead	0.009500%	0.00000	0.00000
Manganese	0.437000%	0.00000	0.00000
Selenium	0.000620%	0.00000	0.00000
	Totals	0.00000	0.00000

file: process.xls (Page ssa)

Table A3 - T
US STEEL GARY WORKS
CONSTRUCTION PERMIT APPLICATION
NO. 13 BLAST FURNACE RELINE
CALCULATION OF CHANGE IN HAZARDOUS AIR POLLUTANTS
EMISSION RATE FROM PROCESS SOURCES
All Additional Hot Metal Through No. 2 Q-BOP

Emission Unit: Steel Producing
Emission Location: No. 1 BOP Gas Cleaner

Change In PM_{10} Emission Rate (tons/yr)	0.00

Hazardous Air Pollutant	Weight Percent of HAP in Sludge	HAP Emission Rate (Based on PM10)	
		(tons/yr)	(lbs/hr)
Antimony	0.001000%	0.00000	0.00000
Arsenic	0.000490%	0.00000	0.00000
Chromium	0.025700%	0.00000	0.00000
Cobalt	0.000200%	0.00000	0.00000
Lead	0.094000%	0.00000	0.00000
Manganese	0.478000%	0.00000	0.00000
	Totals	0.00000	0.00000

file: process.xls (Page ssb)

Table A3 - U
US STEEL GARY WORKS
CONSTRUCTION PERMIT APPLICATION
NO. 13 BLAST FURNACE RELINE
CALCULATION OF CHANGE IN HAZARDOUS AIR POLLUTANTS
EMISSION RATE FROM PROCESS SOURCES
All Additional Hot Metal Through No. 2 Q-BOP

Emission Unit: Steel Producing
Emission Location: No. 1 BOP CAS Bell/OB Lancing Baghouse

Change in PM_{10} Emission Rate (tons/yr)	0.00

Hazardous Air Pollutant	Weight Percent of HAP in Dust	HAP Emission Rate (Based on PM10)	
		(tons/yr)	(lbs/hr)
Antimony	0.000740%	0.00000	0.00000
Arsenic	0.002500%	0.00000	0.00000
Cadmium	0.014200%	0.00000	0.00000
Chromium	0.034800%	0.00000	0.00000
Cobalt	0.000810%	0.00000	0.00000
Lead	0.290000%	0.00000	0.00000
Manganese	2.250000%	0.00000	0.00000
Mercury	0.000017%	0.00000	0.00000
	Totals	0.00000	0.00000

file: process.xls (Page ssc)

Table A3 - V
US STEEL GARY WORKS
CONSTRUCTION PERMIT APPLICATION
NO. 13 BLAST FURNACE RELINE
CALCULATION OF CHANGE IN HAZARDOUS AIR POLLUTANTS
EMISSION RATE FROM PROCESS SOURCES
All Additional Hot Metal Through No. 2 Q-BOP

Emission Unit: Steel Producing
Emission Location: No. 2 Caster Mold Baghouses

Change in PM_{10} Emission Rate (tons/yr)	0.00

Hazardous Air Pollutant	Weight Percent of HAP in Dust	HAP Emission Rate (Based on PM10)	
		(tons/yr)	(lbs/hr)
Antimony	0.000560%	0.00000	0.00000
Arsenic	0.000620%	0.00000	0.00000
Cadmium	0.004380%	0.00000	0.00000
Chromium	0.005170%	0.00000	0.00000
Cobalt	0.002600%	0.00000	0.00000
Lead	0.022000%	0.00000	0.00000
Manganese	0.898000%	0.00001	0.00000
Mercury	0.000028%	0.00000	0.00000
	Totals	0.00001	0.00000

file: process.xls (Page nsa)

Table A3 - W
US STEEL GARY WORKS
CONSTRUCTION PERMIT APPLICATION
NO. 13 BLAST FURNACE RELINE
CALCULATION OF CHANGE IN HAZARDOUS AIR POLLUTANTS
EMISSION RATE FROM PROCESS SOURCES
All Additional Hot Metal Through No. 2 Q-BOP

Emission Unit: Steel Producing
Emission Location: No. 2 QBOP HM Desulfurization Baghouse

Change in PM_{10} Emission Rate (tons/yr)	0.25

Hazardous Air Pollutant	Weight Percent of HAP in Dust	HAP Emission Rate (Based on PM10)	
		(tons/yr)	(lbs/hr)
Antimony	0.001900%	0.00000	0.00000
Arsenic	0.003300%	0.00001	0.00000
Chromium	0.021700%	0.00005	0.00001
Cobalt	0.000390%	0.00000	0.00000
Lead	0.009500%	0.00002	0.00001
Manganese	0.437000%	0.00110	0.00025
Selenium	0.000620%	0.00000	0.00000
	Totals	0.00120	0.00027

file: process.xls (Page nsb)

Table A3 - X
US STEEL GARY WORKS
CONSTRUCTION PERMIT APPLICATION
NO. 13 BLAST FURNACE RELINE
CALCULATION OF CHANGE IN HAZARDOUS AIR POLLUTANTS
EMISSION RATE FROM PROCESS SOURCES
All Additional Hot Metal Through No. 2 Q-BOP

Emission Unit: Steel Producing
Emission Location: No. 2 QBOP Secondary Emissions Baghouse

Change in PM_{10} Emission Rate (tons/yr)	0.51

Hazardous Air Pollutant	Weight Percent of HAP in Dust	HAP Emission Rate (Based on PM10) (tons/yr)	(lbs/hr)
Antimony	0.001200%	0.00001	0.00000
Arsenic	0.000720%	0.00000	0.00000
Cadmium	0.039900%	0.00021	0.00005
Chromium	0.040000%	0.00021	0.00005
Cobalt	0.000760%	0.00000	0.00000
Lead	0.084100%	0.00043	0.00010
Manganese	0.754000%	0.00388	0.00088
Mercury	0.000238%	0.00000	0.00000
	Totals	0.00473	0.00108

file: process.xls (Page nsc)

Table A3 - Y
US STEEL GARY WORKS
CONSTRUCTION PERMIT APPLICATION
NO. 13 BLAST FURNACE RELINE
CALCULATION OF CHANGE IN HAZARDOUS AIR POLLUTANTS
EMISSION RATE FROM PROCESS SOURCES
All Additional Hot Metal Through No. 2 Q-BOP

Emission Unit: Steel Producing
Emission Location: No. 2 QBOP Gas Cleaner

Change in PM_{10} Emission Rate (tons/yr)	1.33

Hazardous Air Pollutant	Weight Percent of HAP in Dust	HAP Emission Rate (Based on PM10)	
		(tons/yr)	(lbs/hr)
Antimony	0.000910%	0.00001	0.00000
Arsenic	0.000790%	0.00001	0.00000
Cadmium	0.001300%	0.00002	0.00000
Chromium	0.016800%	0.00022	0.00005
Lead	0.120000%	0.00160	0.00036
Manganese	0.447000%	0.00595	0.00136
	Totals	0.00781	0.00178

file: process.xls (Page nsd)

Table A3 - Z
US STEEL GARY WORKS
CONSTRUCTION PERMIT APPLICATION
NO. 13 BLAST FURNACE RELINE
CALCULATION OF CHANGE IN HAZARDOUS AIR POLLUTANTS
EMISSION RATE FROM PROCESS SOURCES
All Additional Hot Metal Through No. 2 Q-BOP

Emission Unit: Steel Producing
Emission Location: No. 1 LMF Fume Exhaust Baghouse

Change in PM_{10} Emission Rate (tons/yr)	0.11

Hazardous Air Pollutant	Weight Percent of HAP in Dust	HAP Emission Rate (Based on PM10)	
		(tons/yr)	(lbs/hr)
Antimony	0.002000%	0.00000	0.00000
Arsenic	0.004200%	0.00000	0.00000
Cadmium	0.002560%	0.00000	0.00000
Chromium	0.049000%	0.00005	0.00001
Cobalt	0.001800%	0.00000	0.00000
Manganese	6.690000%	0.00709	0.00162
Mercury	0.000009%	0.00000	0.00000
Nickel	0.020600%	0.00002	0.00000
	Totals	0.00717	0.00164

file: process.xls (Page nse)

Table A3 - AA
US STEEL GARY WORKS
CONSTRUCTION PERMIT APPLICATION
NO. 13 BLAST FURNACE RELINE
CALCULATION OF CHANGE IN HAZARDOUS AIR POLLUTANTS
EMISSION RATE FROM PROCESS SOURCES
All Additional Hot Metal Through No. 2 Q-BOP

Emission Unit: Steel Producing
Emission Location: No. 2 LMF Fume Exhaust Baghouse

Change in PM_{10} Emission Rate (tons/yr)	0.11

Hazardous Air Pollutant	Weight Percent of HAP in Dust	HAP Emission Rate (Based on PM10)	
		(tons/yr)	(lbs/hr)
Antimony	0.002000%	0.00000	0.00000
Arsenic	0.004200%	0.00000	0.00000
Cadmium	0.002560%	0.00000	0.00000
Chromium	0.049000%	0.00005	0.00001
Cobalt	0.001800%	0.00000	0.00000
Manganese	6.690000%	0.00709	0.00162
Mercury	0.000009%	0.00000	0.00000
Nickel	0.020600%	0.00002	0.00000
	Totals	0.00717	0.00164

file: process.xls (Page nsf)

Table A3 - BB
US STEEL GARY WORKS
CONSTRUCTION PERMIT APPLICATION
NO. 13 BLAST FURNACE RELINE
CALCULATION OF CHANGE IN HAZARDOUS AIR POLLUTANTS
EMISSION RATE FROM PROCESS SOURCES
All Additional Hot Metal Through No. 2 Q-BOP

Emission Unit: Steel Producing
Emission Location: No. 3 LMF Fume Exhaust/Mat. Handling Baghouse

Change in PM_{10} Emission Rate (tons/yr)	0.05

Hazardous Air Pollutant	Weight Percent of HAP in Dust	HAP Emission Rate (Based on PM10)	
		(tons/yr)	(lbs/hr)
Antimony	0.002000%	0.00000	0.00000
Arsenic	0.004200%	0.00000	0.00000
Cadmium	0.002560%	0.00000	0.00000
Chromium	0.049000%	0.00003	0.00001
Cobalt	0.001800%	0.00000	0.00000
Manganese	6.690000%	0.00368	0.00084
Mercury	0.000009%	0.00000	0.00000
Nickel	0.020600%	0.00001	0.00000
	Totals	0.00372	0.00085

file: process.xls (Page nsg)

Table A3 - DD
US STEEL GARY WORKS
CONSTRUCTION PERMIT APPLICATION
NO. 13 BLAST FURNACE RELINE
CALCULATION OF CHANGE IN HAZARDOUS AIR POLLUTANTS
EMISSION RATE FROM PROCESS SOURCES
All Additional Hot Metal Through The No. 1 BOP

Emission Unit: **Steel Producing**
Emission Location: **No. 13 Blast Furnace Slag Pit Operations**

Annual Production/Throughput Change = 4,407 tons slag

Hazardous Air Pollutant	Emission Factor (lb/ton slag)	HAP Emission Rate (tons/yr)	HAP Emission Rate (lbs/hr)
Cadmium	1.25E-06	0.00000	0.00000
Chromium	2.17E-05	0.00005	0.00001
Fluorides	4.84E-02	0.10664	0.02435
Hydrogen Cyanide	1.22E-06	0.00000	0.00000
Hydrogen Sulfide	1.62E-01	0.35750	0.08162
Lead	1.50E-05	0.00003	0.00001
Manganese	1.71E-03	0.00378	0.00086
Nickel	8.79E-06	0.00002	0.00000
	Totals	0.4680222	0.1068544

TABLE 4-1
U.S. STEEL - GARY WORKS
NO. 14 BLAST FURNACE RELINE PROJECT
CONSTRUCTION PERMIT APPLICATION
FOR 17,627 TONS/YR HOT METAL THROUGHPUT INCREMENT

Estimated Increases in Emissions of Relevant Regulated Air Pollutants Compared to Significant Emissions (Major Source Modification) Thresholds

Pollutant	Estimated Emissions Increases tons/yr		Significant Emissions Thresholds tons/yr
	Case I[1]	Case II[1]	
Particulate Matter (PM)	3.514	4.219	25
Particulate Matter (PM_{10})	2.144	3.837	15
Sulfur Dioxide (SO_2)	7.172	7.172	40
Oxides of Nitrogen (NOx)	2.415	2.446	40
Carbon Monoxide (CO)	96.791	99.017	100
Volatile Organic Compounds (VOC)	0.054	0.054	15.44[2]
Lead (Pb)	0.0008	0.002	0.6
Hydrogen Sulfide (H_2S)	0.357	0.357	10
Fluorides (F)	0.107	0.107	3
Beryllium (Be)	4.4E-08	4.4E-08	0.0004
Mercury (Hg)	9.7E-07	2.2E-06	0.1
Individual HAP	0.021	0.037	10
Total HAPs	0.090	0.115	25

(1) Assumes all additional hot metal produced at No. 14 Blast Furnace is processed through:

Case I - No. 1 BOP Shop
Case II - No. 2 Q-BOP Shop

(2) Remainder in the USS - Gary Works VOC Diminimis Account prior to the No. 13 Blast Furnace Reline Project (total of all previous increases) in calendar years 2000 through 2004 to date. Total increases including project is less than 25 tons VOC/yr major source modification threshold in severe ozone non-attainment area.

U.S. STEEL - GARY WORKS
NO. 14 BLAST FURNACE RELINE PROJECT
CONSTRUCTION PERMIT APPLICATION
FOR 17,627 TONS/YR HOT METAL THROUGHPUT INCREMENT

Estimated Increases in Emissions of Relevant Regulated Air Pollutants Compared to Significant Emissions (Major Source Modification) Thresholds

Pollutant	Estimated Emissions Increases tons/yr		Significant Emissions Thresholds[2] tons/yr	Exemption Levels[2] tons/yr
	Case I[1]	Case II[1]		
Particulate Matter (PM)	3.514	4.219	25	5
Particulate Matter (PM_{10})	2.144	3.837	15	5
Sulfur Dioxide (SO_2)	7.172	7.172	40	10
Oxides of Nitrogen (NO_x)	2.415	2.446	40	10
Carbon Monoxide (CO)	96.791	99.017	100	Unclassified
Volatile Organic Compounds (VOC)	0.054	0.054	15.44[3]	10
Lead (Pb)	0.0008	0.002	0.6	Unclassified
Hydrogen Sulfide (H_2S)	0.357	0.357	10	Unclassified
Fluorides (F)	0.107	0.107	3	Unclassified
Beryllium (Be)	4.4E-08	4.4E-08	0.0004	Unclassified
Mercury (Hg)	9.7E-07	2.2E-06	0.1	Unclassified
Individual HAP	0.021	0.037	10	Unclassified
Total HAPs	0.090	0.115	25	Unclassified

(1) Assumes all additional hot metal produced at No. 14 Blast Furnace is processed through:

Case I - No. 1 BOP Shop
Case II - No. 2 Q-BOP Shop

(2) 326 IAC 2-13-1, Interim Operating Permit Revision Approvals, allows interim construction approval in nonattainment areas when emissions would be below the significance threshold and would not require a permit revision for the nonattainment pollutant.

(3) Remainder in the USS - Gary Works VOC Diminimis Account prior to the No. 13 Blast Furnace Reline Project (total of all previous increases) in calendar years 2000 through 2004 to date. Total increases including project is less than 25 tons VOC/yr major source modification threshold in severe ozone non-attainment area.

US STEEL GARY WORKS
CONSTRUCTION PERMIT APPLICATION
BLAST FURNACE NO.13 RELINE
EMISSION RATES FOR GASEOUS AIR POLLUTANTS
NO. 13 BLAST FURNACE FUTURE HOT METAL PRODUCTION RATE (TONS/DAY):
8,378
All Additional Hot Metal Through The #1 BOP

Emission Unit	PM_{10}		PM		SO_2		CO		NO_x		VOC	
	tons/yr	lbs/hr	tons/yr	lbs/hr	tons/yr	lbs/hr	tons/yr	lbs/hr	tons/yr	lbs/hr	tons/yr	lbs/hr
No. 13 Blast Furnace	0.88	0.20	1.24	0.28	4.66	1.06	3.57	0.82	1.37	0.31	0.02	0.01
TBBH Boilers	0.31	0.07	0.94	0.21	2.07	0.47	8.59	1.96	0.20	0.05	0.00	0.00
PCI	0.01	0.00	0.01	0.00	0.00	0.00	0.00	0.00	0.00	0.00	0.00	0.00
No. 1 BOP Shop	0.93	0.21	1.28	0.29	0.44	0.10	84.63	19.32	0.85	0.19	0.03	0.01
No. 1 BOP Caster	0.01	0.00	0.04	0.01	0.00	0.00	0.00	0.00	0.00	0.00	0.00	0.00
No. 2 Q-BOP Shop LMF	0.00	0.00	0.00	0.00	0.00	0.00	0.00	0.00	0.00	0.00	0.00	0.00
No. 2 Q-BOP Caster	0.00	0.00	0.00	0.00	0.00	0.00	0.00	0.00	0.00	0.00	0.00	0.00
TOTAL	2.144	0.489	3.514	0.802	7.172	1.638	96.791	22.098	2.415	0.551	0.054	0.012

US STEEL GARY WORKS
CONSTRUCTION PERMIT APPLICATION
BLAST FURNACE NO.13 RELINE
CHANGE IN EMISSION RATES
NO. 13 BLAST FURNACE FUTURE HOT METAL PRODUCTION RATE (TONS/DAY):
8,378
All Additional Hot Metal Through No. 2 Q-BOP

Emission Unit	Emission Location	Emissions Increase			
		PM_{10}		CO	NO_x
		tons/yr	lbs/hr	lbs/hr	lbs/hr
Blast Furnace No.13	Casthouse Baghouse	0.1463	0.0334	0.0000	0.0498
	Casthouse Baghouse (Roof Monitor)	0.0016	0.0004	0.0000	0.0001
	Slag Pit Operations	0.5942	0.1357	0.0406	0.0106
	Stoves (NG)	0.0280	0.0064	0.0705	0.2352
	Stoves (BFG)	0.1117	0.0255	0.7039	0.0162
TBBH Boilers	TBBH Boilers (BFG)	0.3114	0.0711	1.9623	0.0452
PCI	Coal Pulverizer Bldg.	0.0093	0.0021	0.0000	0.0000
No. 1 BOP	Gas Cleaning Systems	0.0000	0.0000	0.0000	0.0000
	Gas Cleaning Systems (Roof Monitor)	0.0000	0.0000	0.0000	0.0000
	Hot Metal Desulf Baghouse	0.0000	0.0000	0.0000	0.0000
	Hot Metal Desulf Baghouse (Roof Monitor)	0.0000	0.0000	0.0000	0.0000
	Continuous Casting	0.00E+00	0.00E+00	0.00E+00	0.00E+00
	CAS Bell Baghouse	0.0000	0.0000	0.0000	0.0000
	CAS Bell Baghouse (Roof Monitor)	0.0000	0.0000	0.0000	0.0000
	Flux Handling Baghouse	0.0000	0.0000	0.0000	0.0000
	Flux Handling Baghouse (Roof Monitor)	0.0000	0.0000	0.0000	0.0000
No. 1 BOP Caster	Fugitives (Roof Monitor)	0.0000	0.0000	0.0000	0.0000
No. 2 Q-BOP	Gas Cleaning Systems	1.1216	0.2561	18.4062	0.1889
	Gas Cleaning Systems (Roof Monitor)	0.2099	0.0479	0.9147	0.0005
	Hot Metal Desulf Baghouse	0.2475	0.0565	0.0000	0.0048
	Hot Metal Desulf Baghouse (Roof Monitor)	0.0053	0.0012	0.0000	0.0000
	Continuous Casting	1.21E-04	2.77E-05	0.00E+00	0.00E+00
	Secondary Emissions Baghouse	0.5140	0.1174	0.0000	0.0000
	116' Elevation North and South Flux Handling System Baghouses	0.0343	0.0078	0.0000	0.0000
	116' Elevation North and South Flux Handling System Baghouses (Roof Monitor)	0.0003	0.0001	0.0000	0.0000
	North Roof Baghouse (166')	0.0097	0.0022	0.0000	0.0000
	North Roof Baghouse (166') (Roof Monitor)	0.0003	0.0001	0.0000	0.0000
	South Roof Baghouse (166')	0.0097	0.0022	0.0000	0.0000
	South Roof Baghouse (166') (Roof Monitor)	0.0003	0.0001	0.0000	0.0000
	Middle Roof Baghouse (166')	0.0097	0.0022	0.0000	0.0000
	Middle Roof Baghouse (166') (Roof Monitor)	0.0003	0.0001	0.0000	0.0000
	Day Tank Lime Silo Baghouse	0.0154	0.0035	0.0000	0.0000
	Day Tank Lime Silo Baghouse (Roof	0.0009	0.0002	0.0000	0.0000
	Lime Dump Station Baghouse	0.0086	0.0020	0.0000	0.0000
	Lime Dume Station Baghouse (Roof	0.0009	0.0002	0.0000	0.0000
	No. 1 Hot Fume Exhaust Baghouse	0.0971	0.0222	0.0375	0.0022
	No. 1 Hot Fume Exhaust Baghouse (Roof Monitor)	0.0088	0.0020	0.0020	0.0001
	No. 2 Hot Fume Exhaust Baghouse	0.0971	0.0222	0.0375	0.0022
	No. 2 Hot Fume Exhaust Baghouse (Roof Monitor)	0.0088	0.0020	0.0020	0.0001
	No. 1&2 Material Handling System	0.0729	0.0166	0.0000	0.0000
	No. 1 & 2 Material Handling System (Roof Monitor)	0.0009	0.0002	0.0000	0.0000
	No. 3 LMF Hot Fume Extraction Exhaust/ Material Handling System	0.0514	0.0117	0.0387	0.0023
	No. 3 LMF Hot Fume Extraction Exhaust/ Material Handling System (Roof Monitor)	0.0035	0.0008	0.0008	0.0000
	RH Vacuum Degasser Slag Conditioning Baghouse	0.1045	0.0239	0.3900	0.0001
	RH Vacuum Degasser Slag Conditioning Baghouse (Roof Monitor)	0.0000	0.0000	0.0000	0.0000
No. 2 Q-BOP Caster	Fugitives (Roof Monitor)	0.0006	0.0001	0.0000	0.0000

US STEEL GARY WORKS
CONSTRUCTION PERMIT APPLICATION
BLAST FURNACE NO.13 RELINE
CHANGE IN EMISSION RATES
NO. 13 BLAST FURNACE FUTURE HOT METAL PRODUCTION RATE (TONS/DAY):
8,378
All Additional Hot Metal Through the #1 BOP

Emission Unit	Emission Location	Emissions Increase			
		PM_{10}		CO	NO_X
		tons/yr	lbs/hr	lbs/hr	lbs/hr
Blast Furnace No.13	Casthouse Baghouse	0.1463	0.0334	0.0000	0.0498
	Casthouse Baghouse (Roof Monitor)	0.0016	0.0004	0.0000	0.0001
	Slag Pit Operations	0.5942	0.1357	0.0406	0.0106
	Stoves (NG)	0.0280	0.0064	0.0705	0.2352
	Stoves (BFG)	0.1117	0.0255	0.7039	0.0162
TBBH Boilers	TBBH Boilers (BFG)	0.3114	0.0711	1.9623	0.0452
PCI	Coal Pulverizer Bldg.	0.0093	0.0021	0.0000	0.0000
No. 1 BOP	Gas Cleaning Systems	0.2523	0.0576	18.4062	0.1889
	Gas Cleaning Systems (Roof Monitor)	0.2125	0.0485	0.9147	0.0005
	Hot Metal Desulf Baghouse	0.2856	0.0652	0.0000	0.0048
	Hot Metal Desulf Baghouse (Roof Monitor)	0.0344	0.0078	0.0000	0.0001
	Continuous Casting	0.00E+00	0.00E+00	0.00E+00	0.00E+00
	CAS Bell Baghouse	0.0971	0.0222	0.0000	0.0000
	CAS Bell Baghouse (Roof Monitor)	0.0100	0.0023	0.0000	0.0000
	Flux Handling Baghouse	0.0366	0.0083	0.0000	0.0000
	Flux Handling Baghouse (Roof Monitor)	0.0003	0.0001	0.0000	0.0000
No. 1 BOP Caster	Fugitives (Roof Monitor)	0.0128	0.0029	0.0000	0.0000
No. 2 Q-BOP	Gas Cleaning Systems	0.0000	0.0000	0.0000	0.0000
	Gas Cleaning Systems (Roof Monitor)	0.0000	0.0000	0.0000	0.0000
	Hot Metal Desulf Baghouse	0.0000	0.0000	0.0000	0.0000
	Hot Metal Desulf Baghouse (Roof Monitor)	0.0000	0.0000	0.0000	0.0000
	Continuous Casting	0.00E+00	0.00E+00	0.00E+00	0.00E+00
	Secondary Emissions Baghouse	0.0000	0.0000	0.0000	0.0000
	116' Elevation North and South Flux Handling System Baghouses	0.0000	0.0000	0.0000	0.0000
	116' Elevation North and South Flux Handling System Baghouses (Roof Monitor)	0.0000	0.0000	0.0000	0.0000
	North Roof Baghouse (166')	0.0000	0.0000	0.0000	0.0000
	North Roof Baghouse (166') (Roof Monitor)	0.0000	0.0000	0.0000	0.0000
	South Roof Baghouse (166')	0.0000	0.0000	0.0000	0.0000
	South Roof Baghouse (166') (Roof Monitor)	0.0000	0.0000	0.0000	0.0000
	Middle Roof Baghouse (166')	0.0000	0.0000	0.0000	0.0000
	Middle Roof Baghouse (166') (Roof Monitor)	0.0000	0.0000	0.0000	0.0000
	Day Tank Lime Silo Baghouse	0.0000	0.0000	0.0000	0.0000
	Day Tank Lime Silo Baghouse (Roof	0.0000	0.0000	0.0000	0.0000
	Lime Dump Station Baghouse	0.0000	0.0000	0.0000	0.0000
	Lime Dume Station Baghouse (Roof	0.0000	0.0000	0.0000	0.0000
	No. 1 Hot Fume Exhaust Baghouse	0.0000	0.0000	0.0000	0.0000
	No. 1 Hot Fume Exhaust Baghouse (Roof Monitor)	0.0000	0.0000	0.0000	0.0000
	No. 2 Hot Fume Exhaust Baghouse	0.0000	0.0000	0.0000	0.0000
	No. 2 Hot Fume Exhaust Baghouse (Roof Monitor)	0.0000	0.0000	0.0000	0.0000
	No. 1&2 Material Handling System	0.0000	0.0000	0.0000	0.0000
	No. 1 & 2 Material Handling System (Roof Monitor)	0.0000	0.0000	0.0000	0.0000
	No. 3 LMF Hot Fume Extraction Exhaust/ Material Handling System	0.0000	0.0000	0.0000	0.0000
	No. 3 LMF Hot Fume Extraction Exhaust/ Material Handling System (Roof Monitor)	0.0000	0.0000	0.0000	0.0000
	RH Vacuum Degasser Slag Conditioning Baghouse	0.0000	0.0000	0.0000	0.0000
	RH Vacuum Degasser Slag Conditioning Baghouse (Roof Monitor)	0.0000	0.0000	0.0000	0.0000
No. 2 Q-BOP Caster	Fugitives (Roof Monitor)	0.0000	0.0000	0.0000	0.0000

CONSTRUCTION PERMIT APPLICATION
RELINE OF NO. 13 BLAST FURNACE
U.S. STEEL – GARY WORKS
PLANT ID NO. 089-00121

TABLES

CONSTRUCTION PERMIT APPLICATION
RELINE OF NO. 13 BLAST FURNACE
U.S. STEEL – GARY WORKS
PLANT ID NO. 089-00121

TABLES

TABLE 2-1
U.S. STEEL - GARY WORKS
NO. 13 BLAST FURNACE RELINE PROJECT
CONSTRUCTION PERMIT APPLICATION

Expected Production/Throughput Changes at Affected Facilities

Facility	Annual Production/Throughput Changes
No. 13 Blast Furnace	609,592 tons of hot metal produced
	152,398 tons of slag generated
	30,480 million standard cubic feet of gas generated
	8,047 million standard cubic feet of blast furnace gas consumed at the stoves
	254 million standard cubic feet of natural gas consumed at the stoves
	91,439 tons of pulverized coal consumed
	827,549 tons of self fluxing pellets consumed
No. 1 BOP Shop or No. 2 BOP Shop	609,592 tons of hot metal consumed*
	717,167 tons of liquid steel produced
	71,717 tons of slag generated
Pulverized Coal Injection Facility	91,439 tons of pulverized coal produced
Self-Fluxing Pellets Receipt and Handling	827,549 tons of self fluxing pellets received and handled
Turboblower Boiler House	22,433 million standard cubic feet of blast furnace gas consumed

* Two operating scenarios are being permitted
Case I – All additional hot metal processed through No. 1 BOP Shop
Case II – All additional hot metal processed through No. 2 Q-BOP Shop

TABLE 3-1
U.S. STEEL- GARYWORKS
NO. 13 BLAST FURNACE RELINE PROJECT
CONSTRUCTION PERMIT APPLICATION

Monthly Hot Metal Production at No. 13 Blast Furnace
June 1996 through May 1998

	Month	No. 13 Blast Furnace (NTHM/Mo.)
1	Jun-96	208,911
2	Jul-96	227,633
3	Aug-96	259,805
4	Sep-96	247,798
5	Oct-96	259,816
6	Nov-96	268,076
7	Dec-96	275,565
8	Jan-97	272,012
9	Feb-97	233,392
10	Mar-97	269,408
11	Apr-97	253,567
12	May-97	277,773
13	Jun-97	277,488
14	Jul-97	247,779
15	Aug-97	272,231
16	Sep-97	243,610
17	Oct-97	257,054
18	Nov-97	252,362
19	Dec-97	241,805
20	Jan-98	258,284
21	Feb-98	237,931
22	Mar-98	250,700
23	Apr-98	250,758
24	May-98	237,057
24 Month Total		6,080,815
Annual Average Tons/Yr		3,040,408

Table 3-2
US STEEL GARY WORKS
CONSTRUCTION PERMIT APPLICATION
BLAST FURNACE NO.13 RELINE
CHANGE IN EMISSION RATES FROM PROCESS SOURCES
PM
All Additional Hot Metal Through No. 1 BOP

Emission Unit	Emission Location	Annual Production/ Throughput Change	Units (tons)	Emission Factor	Units	Capture Efficiency	Control Efficiency	Annual Change in Emissions		Source of Emission Factor
								(tons/yr)	(lbs/hr)	
No. 13 Blast Furnace	Casthouse Fugitives *	609,592	hot metal	0.60	lb/ton	99.80%	N/A	0.1097	0.0251	AP-42
	Casthouse Emission Control Baghouse	256	hours	0.0024	lb/ton	N/A	N/A	0.0003	0.0001	SIP Limit (Controlled Emissions)
	Slag Pit Operations	152,398	slag	0.106	lb/ton	0.00%	0.00%	8.0771	1.8441	ISPAT Inland Permit Application
PCI	Coal Pulverizer Bldg.	91,439	coal	0.008	lb/ton	N/A	N/A	0.3658	0.0835	Ispat Inland PCI Controlled Emission Factor
No. 1 BOP Shop	Fugitives (Roof Monitor)					N/A	N/A	16.4815	3.7629	See PM Fugitive Emission Calculation Table
	Gas Cleaning System (2 units)	717,167	molten steel	36.97	lb/ton	99.72%	99.90%	13.2197	3.0182	AP-42
	Hot Metal Desulfurization Baghouse	350	hours	15.00	lb/hr	N/A	N/A	2.6250	0.5993	SIP Limit (Controlled Emissions)
	Continuous Casting	717,167	molten steel	0.014	lb/ton	0.00%	0.00%	0.0000	0.0000	PM10 SIP Background Documentation for No. 2 Caster
	CAS Bell/OB Lancing Baghouse	350	hours	5.100	lb/hr	N/A	N/A	0.8925	0.2038	SIP Limit (Controlled Emissions)
	Flux Handling Baghouse	350	hours	1.920	lb/hr	N/A	N/A	0.3360	0.0767	SIP Modeling Limit
No. 1 BOP Caster	Fugitives (Roof Monitor) *	717,167	molten steel	0.014	lb/ton	0.00%	N/A	1.5061	0.3438	PM10 SIP Background Documentation for No. 2 Caster

Table 3-2
US STEEL GARY WORKS
CONSTRUCTION PERMIT APPLICATION
BLAST FURNACE NO.13 RELINE
CHANGE IN EMISSION RATES FROM PROCESS SOURCES
PM
All Additional Hot Metal Through No. 1 BOP

Emission Unit	Emission Location	Annual Production/ Throughput Change	Units (tons)	Emission Factor	Units	Capture Efficiency	Control Efficiency	Annual Change in Emissions		Source of Emission Factor
								(tons/yr)	(lbs/hr)	
No. 2 Q-BOP Shop LMF	Fugitives (Roof Monitor)					N/A	N/A	0.0000	0.0000	See PM Fugitive Emission Calculation Table
	Gas Cleaning System (2 units)	0	molten steel	36.960	lb/ton	99.72%	99.90%	0.0000	0.0000	AP-42
	Hot Metal Desulfurization Baghouse	0	hours	13.000	lb/hr	N/A	N/A	0.0000	0.0000	SIP Limit (Controlled Emissions)
	Continuous Casting *	0	molten steel	0.014	lb/ton	95.00%	99.99%	0.0000	0.0000	PM10 SIP Background Documentation for No. 2 Caster
	Secondary Emissions Baghouse	0	hours	27.000	lb/hr	N/A	N/A	0.0000	0.0000	SIP Limit (Controlled Emissions)
	116' Elevation North and South Flux Handling System Baghouses	0	hours	1.800	lb/hr	N/A	N/A	0.0000	0.0000	SIP Limit (Controlled Emissions)
	North Roof Baghouse (166')	0	hours	0.510	lb/hr	N/A	N/A	0.0000	0.0000	SIP Limit (Controlled Emissions)
	South Roof Baghouse (166')	0	hours	0.510	lb/hr	N/A	N/A	0.0000	0.0000	SIP Limit (Controlled Emissions)
	Middle Roof Baghouse (166')	0	hours	0.510	lb/hr	N/A	N/A	0.0000	0.0000	SIP Limit (Controlled Emissions)
	Day Tank Lime Silo Baghouse	0	hours	0.810	lb/hr	N/A	N/A	0.0000	0.0000	SIP Modeling Limit
	Lime Dump Station Baghouse	0	hours	0.450	lb/hr	N/A	N/A	0.0000	0.0000	SIP Modeling Limit
	No. 1 Hot Fume Exhaust Baghouse	0	hours	5.100	lb/hr	N/A	N/A	0.0000	0.0000	SIP Limit (Controlled Emissions)
	No. 2 Hot Fume Exhaust Baghouse	0	hours	5.1	lb/hr	N/A	N/A	0.0000	0.0000	SIP Limit (Controlled Emissions)
	LMF 1 & 2 Material Handling System	0	hours	3.830	lb/hr	N/A	N/A	0.0000	0.0000	SIP Limit (Controlled Emissions)
	No. 3 LMF Hot Fume Extracation Exhaust	0	hours	2.700	lb/hr	N/A	N/A	0.0000	0.0000	SIP Limit (Controlled Emissions)
	RH Vacuum Degasser Slag Conditioning Baghouse	0	hours	5.490	lb/hr	N/A	N/A	0.0000	0.0000	SIP Limit (Controlled Emissions)
No. 2 Q-BOP Caster	Fugitives (Roof Monitor) *	0	molten steel	0.014	lb/ton	95.00%	N/A	0.0000	0.0000	PM10 SIP Background Documentation for No. 2 Caster

* - Emission unit locations where 70% containment efficiency was applied to the controlled annual change in emissions

Table 3-2a
US STEEL GARY WORKS
CONSTRUCTION PERMIT APPLICATION
BLAST FURNACE NO.13 RELINE
FUGITIVE EMISSION CALCULATION

PM

All Additional Hot Metal Through No. 1 BOP

Emission Unit	Emission Location	Annual Production/ Throughput Change	Units (tons)	Emission Factor	Units	Capture Efficiency	Annual Change In Emissions		Source of Emission Factor
							(tons/yr)	(lbs/hr)	
No. 1 BOP Shop	Gas Cleaning System (2 units)	717,167	molten steel	36.96	lb/ton	99.72%	11.1327	2.5417	AP-42
	Hot Metal Desulfurization Baghouse *	609,592	hot metal	1.09	lb/ton	98.50%	4.9834	1.1378	AP-42
	CAS Bell Baghouse	717,167	molten steel	0.0640	lb/ton	94.99%	0.3449	0.0788	Source Registration Notification (April 1995)
	Flux Handling Baghouse	717,167	molten steel	0.0190	lb/ton	99.00%	0.0204	0.0047	AP-42
Total Fugitives (Roof Monitor - 70% Building Containment Efficiency where applicable)							16.482	3.763	
No. 2 Q-BOP Shop & LMF	Gas Cleaning System (2 units)	0	molten steel	36.7900	lb/ton	99.72%	0.0000	0.0000	AP-42
	Hot Metal Desulfurization Baghouse	0	hot metal	1.2590	lb/ton	99.40%	0.0000	0.0000	AP-42
	No. 1 Hot Fume Exhaust Baghouse	0	molten steel	0.17	lb/ton	94.99%	0.0000	0.0000	Gary Works No. 3 LMF CPA Addendum (April 1995)
	No. 2 Hot Fume Exhaust Baghouse	0	molten steel	0.17	lb/ton	94.99%	0.0000	0.0000	Gary Works No. 3 LMF CPA Addendum (April 1995)
	LMF 1 & 2 Material Handling System	0	molten steel	0.019	lb/ton	95.00%	0.0000	0.0000	AP-42
	No. 3 LMF Hot Fume Extracation Exhaust/ Material Handling	0	molten steel	0.17	lb/ton	97.99%	0.0000	0.0000	Gary Works No. 3 LMF CPA Addendum (April 1995)
	RH Vacuum Degasser Slag Conditioning Baghouse	0	molten steel	0.165	lb/ton	100.00%	0.0000	0.0000	Nippon Steel Test
	116' Elevation North and South Flux Handling Baghouse	0	molten steel	0.019	lb/ton	99.00%	0.0000	0.0000	Same as LMF Material Handling
	North Roof Baghouse (166')	0	molten steel	0.019	lb/ton	99.00%	0.0000	0.0000	Same as LMF Material Handling
	South Roof Baghouse (166')	0	molten steel	0.019	lb/ton	99.00%	0.0000	0.0000	Same as LMF Material Handling
	Middle Roof Baghouse (166')	0	molten steel	0.019	lb/ton	99.00%	0.0000	0.0000	Same as LMF Material Handling
	Day Tank Lime Silo Baghouse *	0	molten steel	0.019	lb/ton	99.00%	0.0000	0.0000	Same as LMF Material Handling
	Lime Dump Station Baghouse *	0	molten steel	0.019	lb/ton	99.00%	0.0000	0.0000	Same as LMF Material Handling
Total Fugitives (Roof Monitor - 70% Building Containment Efficiency where applicable)							0.0000	0.0000	

* - Emissions Unit Locations where 70% containment efficiency was not applicable.

Table 3-3

US STEEL GARY WORKS
CONSTRUCTION PERMIT APPLICATION
BLAST FURNACE NO.13 RELINE
CHANGE IN EMISSION RATES FROM PROCESS SOURCES

PM_{10}

All Additional Hot Metal Through No. 1 BOP

Emission Unit	Emission Location	Annual Production/ Throughput Change	Units (tons)	Emission Factor	Units	Capture Efficiency	Control Efficiency	Annual Change in Emissions		Source of Emission Factor
								(tons/yr)	(lbs/hr)	
No. 13 Blast Furnace	Casthouse Fugitives *	609,592	hot metal	0.306	lb/ton	99.80%	N/A	0.0560	0.0128	AP-42
	Casthouse Emission Control Baghouse	256	hours	38.570	lbs/hr	N/A	N/A	4.9410	1.1281	SIP Limit (Controlled Emissions)
	Slag Pit Operations	152,398	slag	0.0425	lb/ton	0.00%	0.00%	3.2385	0.7394	ISPAT Inland Permit
PCI	Coal Pulverizer Bldg.	91,439	coal	0.007	lb/ton	N/A	N/A	0.3200	0.0731	Ispat Inland PCI Controlled Emission Factor
No. 1 BOP Shop	Fugitives (Roof Monitor)					N/A	N/A	8.8928	2.0303	See PM10 Fugitive Emission Calculation Table
	Gas Cleaning System (2 units)	717,167	molten steel	24.40	lb/ton	99.72%	99.90%	8.7249	1.9920	AP-42
	Hot Metal Desulfurization Baghouse	350	hours	15.00	lbs/hr	N/A	N/A	2.6250	0.5993	SIP Limit (Controlled Emissions)
	Continuous Casting	717,167	molten steel	0.0041	lb/ton	0.00%	0.00%	0.0000	0.0000	PM10 SIP Background Documentation for No. 2 Caster
	CAS Bell/OB Lancing Baghouse	350	hours	5.1000	lbs/hr	N/A	N/A	0.8925	0.2038	SIP Limit (Controlled Emissions)
	Flux Handling Baghouse	350	hours	1.9200	lbs/hr	N/A	N/A	0.3360	0.0767	SIP Modeling Limit
No. 1 BOP Caster	Fugitives (Roof Monitor) *	717,167	molten steel	0.0041	lb/ton	0.00%	N/A	0.4411	0.1007	PM10 SIP Background Documentation for No. 2 Caster

Table 3-3
US STEEL GARY WORKS
CONSTRUCTION PERMIT APPLICATION
BLAST FURNACE NO.13 RELINE
CHANGE IN EMISSION RATES FROM PROCESS SOURCES
PM_{10}
All Additional Hot Metal Through No. 1 BOP

Emission Unit	Emission Location	Annual Production/ Throughput Change	Units (tons)	Emission Factor	Units	Capture Efficiency	Control Efficiency	Annual Change in Emissions		Source of Emission Factor
								(tons/yr)	(lbs/hr)	
No. 2 Q-BOP Shop LMF	Fugitives (Roof Monitor)					N/A	N/A	0.0000	0.0000	See PM10 Fugitive Emission Calculation Table
	Gas Cleaning System (2 units)	0	molten steel	24.1000	lb/ton	99.72%	99.62%	0.0000	0.0000	AP-42
	Hot Metal Desulfurization Baghouse	0	hours	13.0000	lbs/hr	N/A	N/A	0.0000	0.0000	SIP Limit (Controlled Emissions)
	Continuous Casting *	0	molten steel	0.0041	lb/ton	95.00%	99.00%	0.00E+00	0.00E+00	PM10 SIP Background Documentation for No. 2 Caster
	Secondary Emissions Baghouse	0	hours	27.0000	lbs/hr	N/A	N/A	0.0000	0.0000	SIP Limit (Controlled Emissions)
	116' Elevation North and South Flux Handling System Baghouses	0	hours	1.8000	lbs/hr	N/A	N/A	0.0000	0.0000	SIP Limit (Controlled Emissions)
	North Roof Baghouse (166')	0	hours	0.5100	lbs/hr	N/A	N/A	0.0000	0.0000	SIP Limit (Controlled Emissions)
	South Roof Baghouse (166')	0	hours	0.5100	lbs/hr	N/A	N/A	0.0000	0.0000	SIP Limit (Controlled Emissions)
	Middle Roof Baghouse (166')	0	hours	0.5100	lbs/hr	N/A	N/A	0.0000	0.0000	SIP Limit (Controlled Emissions)
	Day Tank Lime Silo Baghouse	0	hours	0.8100	lbs/hr	N/A	N/A	0.0000	0.0000	SIP Modeling Limit
	Lime Dump Station Baghouse	0	hours	0.4500	lbs/hr	N/A	N/A	0.0000	0.0000	SIP Modeling Limit
	No. 1 Hot Fume Exhaust Baghouse	0	hours	5.10	lbs/hr	N/A	N/A	0.0000	0.0000	SIP Limit (Controlled Emissions)
	No. 2 Hot Fume Exhaust Baghouse	0	hours	5.10	lbs/hr	N/A	N/A	0.0000	0.0000	SIP Limit (Controlled Emissions)
	LMF 1 & 2 Material Handling System	0	hours	3.830	lbs/hr	N/A	N/A	0.0000	0.0000	SIP Limit (Controlled Emissions)
	No. 3 LMF Hot Fume Extracation Exhaust/ Material Handling System	0	hours	2.70	lbs/hr	N/A	N/A	0.0000	0.0000	SIP Limit (Controlled Emissions)
	RH Vacuum Degasser Slag Conditioning Baghouse	0	hours	5.49	lbs/hr	N/A	N/A	0.0000	0.0000	SIP Limit (Controlled Emissions)
No. 2 Q-BOP Cester	Fugitives (Roof Monitor) *	0	molten steel	0.0041	lb/ton	95.00%	N/A	0.0000	0.0000	PM10 SIP Background Documentation for No. 2 Caster

* - Emission unit locations where 70% containment efficiency was applied to the controlled annual change in emissions

Table 3-3a
US STEEL GARY WORKS
CONSTRUCTION PERMIT APPLICATION
BLAST FURNACE NO.13 RELINE
FUGITIVE EMISSION CALCULATION

PM_{10}

All Additional Hot Metal Through No. 1 BOP

Emission Unit	Emission Location	Annual Production/ Throughput Change	Units (tons)	Emission Factor	Units	Capture Efficiency	Annual Change in Emissions		Source of Emission Factor
							(tons/yr)	(lbs/hr)	
No. 1 BOP Shop	Gas Cleaning System (2 units)	717,167	molten steel	24.40	lb/ton	99.72%	7.3495	1.6780	AP-42
	Hot Metal Desulfurization Baghouse *	609,592	hot metal	0.26	lb/ton	98.50%	1.1887	0.2714	AP-42
	CAS Bell Baghouse	717,167	molten steel	0.0640	lb/ton	94.99%	0.3449	0.0788	Source Registration Notification (April 1995)
	Flux Handling Baghouse	717,167	molten steel	0.0090	lb/ton	99.00%	0.0097	0.0022	AP-42
Total Fugitives (Roof Monitor - 70% Building Containmant Efficiency where applicable)							8.893	2.030	
No. 2 Q-BOP Shop & LMF	Gas Cleaning System (2 units)	0	molten steel	24.1000	lb/ton	99.72%	0.0000	0.0000	AP-42
	Hot Metal Desulfurization Baghouse	0	hot metal	0.3340	lb/ton	99.40%	0.0000	0.0000	AP-42
	No. 1 Hot Fume Exhaust Baghouse	0	molten steel	0.17	lb/ton	94.99%	0.0000	0.0000	Gary Works No. 3 LMF CPA Addendum (April 1995)
	No. 2 Hot Fume Exhaust Baghouse	0	molten steel	0.17	lb/ton	94.99%	0.0000	0.0000	Gary Works No. 3 LMF CPA Addendum (April 1995)
	LMF 1 & 2 Material Handling System	0	molten steel	0.009	lb/ton	95.00%	0.0000	0.0000	AP-42
	No. 3 LMF Hot Fume Extrecation Exhaust	0	molten steel	0.17	lb/ton	97.99%	0.0000	0.0000	Gary Works No. 3 LMF CPA Addendum (April 1995)
	RH Vacuum Degasser Slag Conditioning Baghouse	0	molten steel	0.165	lb/ton	100.00%	0.0000	0.0000	Nippon Steel Test
	LMF 3 Material Handling System	0	molten steel	0.009	lb/ton	97.99%	0.0000	0.0000	AP-42
	116' Elevation North and South Flux Handling Baghouse	0	molten steel	0.009	lb/ton	99.00%	0.0000	0.0000	Same as LMF Material Handling
	North Roof Baghouse (166')	0	molten steel	0.009	lb/ton	99.00%	0.0000	0.0000	Same as LMF Material Handling
	South Roof Baghouse (166')	0	molten steel	0.009	lb/ton	99.00%	0.0000	0.0000	Same as LMF Material Handling
	Middle Roof Baghouse (166')	0	molten steel	0.009	lb/ton	99.00%	0.0000	0.0000	Same as LMF Material Handling
	Day Tank Lime Silo Baghouse *	0	molten steel	0.009	lb/ton	99.00%	0.0000	0.0000	Same as LMF Material Handling
	Lime Dump Station Baghouse *	0	molten steel	0.009	lb/ton	99.00%	0.0000	0.0000	Same as LMF Material Handling
Total Fugitives (Roof Monitor - 70% Building Containment Efficiency where applicable)							0.0000	0.0000	

* - Emissions Unit Locations where 70% containment efficiency was not applicable.

Table 3-4
US STEEL GARY WORKS
CONSTRUCTION PERMIT APPLICATION
BLAST FURNACE NO.13 RELINE
CHANGE IN EMISSION RATES FROM PROCESS SOURCES
SO_2
All Additional Hot Metal Through No. 1 BOP

Emission Unit	Emission Location	Annual Production/ Throughput Change	Units (tons)	Emission Factor	Units	Capture Efficiency	Control Efficiency	Annual Change in Emissions		Source of Emission Factor
								(tons/yr)	(lbs/hr)	
No. 13 Blast Furnace	Casthouse Fugitives	609,592	hot metal	0.276	lb/ton	99.80%	N/A	0.1682	0.0384	June 11, 2002 letter and SO2 SIP
	Casthouse Emission Control Baghouse	609,592	hot metal	0.276	lb/ton	99.80%	0.00%	83.9554	19.1679	SIP Limit and Future Production Rate
	Slag Pit Operations	609,592	hot metal	0.0400	lb/ton	0.00%	0.00	12.1918	2.7835	EWB Engineering Calculation
PCI	Coal Pulverizer Bldg.	91,439	coal	0.00	lb/ton	N/A	N/A	0.0000	0.0000	Not Applicable
No. 1 BOP Shop	Fugitives (Roof Monitor)					N/A	N/A	0.2286	0.0522	See SO2 Fugitive Emission Calculation Table
	Gas Cleaning System (2 units)	717,167	molten steel	0.00	lb/ton	0.00%	0.00%	0.0000	0.0000	Not Applicable
	Hot Metal Desulfurization Baghouse	609,592	hot metal	0.05	lb/ton	98.50%	0.00%	15.0112	3.4272	June 11, 2002 letter and SO2 SIP
	Continuous Casting	717,167	molten steel	0.00	lb/ton	0.00%	0.00%	0.0000	0.0000	Not Applicable
	CAS Bell/OB Lancing Baghouse	717,167	molten steel	0.0000	lb/ton	94.99%	0.00%	0.0000	0.0000	Not Applicable
	Flux Handling Baghouse	717,167	molten steel	0.0000	lb/ton	99.00%	0.00%	0.0000	0.0000	Not Applicable
No. 1 BOP Caster	Fugitives (Roof Monitor)	717,167	molten steel	0.0000	lb/ton	0.00%	N/A	0.0000	0.0000	Not Applicable

Table 3-4

US STEEL GARY WORKS
CONSTRUCTION PERMIT APPLICATION
BLAST FURNACE NO.13 RELINE
CHANGE IN EMISSION RATES FROM PROCESS SOURCES

SO_2

All Additional Hot Metal Through No. 1 BOP

Emission Unit	Emission Location	Annual Production/ Throughput Change	Units (tons)	Emission Factor	Units	Capture Efficiency	Control Efficiency	Annual Change in Emissions		Source of Emission Factor
								(tons/yr)	(lbs/hr)	
No. 2 Q-BOP Shop LMF	Fugitives (Roof Monitor)					N/A	N/A	0.0000	0.0000	See SO2 Fugitive Emission Calculation Table
	Gas Cleaning System (2 units)	0	molten steel	0.0000	lb/ton	0.00%	0.00%	0.0000	0.0000	Not Applicable
	Hot Metal Desulfurization Baghouse	0	hot metal	0.0500	lb/ton	99.40%	0.00%	0.0000	0.0000	June 11, 2002 letter and SO2 SIP
	Continuous Casting	0	molten steel	0.0000	lb/ton	95.00%	0.00%	0.0000	0.0000	Not Applicable
	Secondary Emissions Baghouse	0	molten steel	0.0000	lb/ton	0.00%	0.00%	0.0000	0.0000	Not Applicable
	116' Elevation North and South Flux Handling System Baghouses	0	molten steel	0.0000	lb/ton	99.00%	0.00%	0.0000	0.0000	Not Applicable
	North Roof Baghouse (166')	0	molten steel	0.0000	lb/ton	99.00%	0.00%	0.0000	0.0000	Not Applicable
	South Roof Baghouse (166')	0	molten steel	0.0000	lb/ton	99.00%	0.00%	0.0000	0.0000	Not Applicable
	Middle Roof Baghouse (166')	0	molten steel	0.0000	lb/ton	99.00%	0.00%	0.0000	0.0000	Not Applicable
	Day Tank Lime Silo Baghouse	0	molten steel	0.0000	lb/ton	99.00%	0.00%	0.0000	0.0000	Not Applicable
	Lime Dump Station Baghouse	0	molten steel	0.0000	lb/ton	99.00%	0.00%	0.0000	0.0000	Not Applicable
	No. 1 Hot Fume Exhaust Baghouse	0	molten steel	0.00	lb/ton	94.99%	0.00%	0.0000	0.0000	Not Applicable
	No. 2 Hot Fume Exhaust Baghouse	0	molten steel	0.00	lb/ton	94.99%	0.00%	0.0000	0.0000	Not Applicable
	LMF 1 & 2 Material Handling System	0	molten steel	0.00	lb/ton	95.00%	0.00%	0.0000	0.0000	Not Applicable
	No. 3 LMF Hot Fume Extracation Exhaust	0	molten steel	0.00	lb/ton	97.99%	0.00%	0.0000	0.0000	Not Applicable
	RH Vacuum Degasser Slag Conditioning Baghouse	0	molten steel	0.00	lb/ton	100.00%	0.00%	0.0000	0.0000	Not Applicable
	No. 3 LMF Material Handling System	0	molten steel	0.00	lb/ton	97.99%	0.00%	0.0000	0.0000	Not Applicable
No. 2 Q-BOP Caster	Fugitives (Roof Monitor)	0	molten steel	0.0000	lb/ton	95.00%	N/A	0.0000	0.0000	Not Applicable

Table 3-4a

US STEEL GARY WORKS
CONSTRUCTION PERMIT APPLICATION
BLAST FURNACE NO.13 RELINE
FUGITIVE EMISSION CALCULATION

SO_2

All Additional Hot Metal Through No. 1 BOP

Emission Unit	Emission Location	Annual Production/ Throughput Change	Units (tons)	Emission Factor	Units	Capture Efficiency	Annual Change in Emissions		Source of Emission Factor
							(tons/yr)	(lbs/hr)	
No. 1 BOP Shop	Gas Cleaning System (2 units)	717,167	molten steel	0.00	lb/ton	99.72%	0.0000	0.0000	Not Applicable
	Hot Metal Desulfurization Baghouse	609,592	hot metal	0.05	lb/ton	98.50%	0.2286	0.0522	Hot Metal Desulf Factor
	CAS Bell Baghouse	717,167	molten steel	0.0000	lb/ton	94.99%	0.0000	0.0000	Not Applicable
	Flux Handling Baghouse	717,167	molten steel	0.0000	lb/ton	99.00%	0.0000	0.0000	Not Applicable
						Total Fugitives	0.229	0.052	
No. 2 Q-BOP Shop & LMF	Gas Cleaning System (2 units)	0	molten steel	0.0000	lb/ton	99.72%	0.0000	0.0000	Not Applicable
	Hot Metal Desulfurization Baghouse	0	hot metal	0.0500	lb/ton	99.40%	0.0000	0.0000	Hot Metal Desulf Factor
	No. 1 Hot Fume Exhaust Baghouse	0	molten steel	0.00	lb/ton	94.99%	0.0000	0.0000	Not Applicable
	No. 2 Hot Fume Exhaust Baghouse	0	molten steel	0.00	lb/ton	94.99%	0.0000	0.0000	Not Applicable
	LMF 1 & 2 Material Handling System	0	molten steel	0.00	lb/ton	95.00%	0.0000	0.0000	Not Applicable
	No. 3 LMF Hot Fume Extracation Exhaust	0	molten steel	0.00	lb/ton	97.99%	0.0000	0.0000	Not Applicable
	RH Vacuum Degasser Slag Conditioning Baghouse	0	molten steel	0.00	lb/ton	100.00%	0.0000	0.0000	Not Applicable
	LMF 3 Material Handling System	0	molten steel	0.00	lb/ton	97.99%	0.0000	0.0000	Not Applicable
						Total Fugitives	0.0000	0.0000	Not Applicable

Table 3-5

US STEEL GARY WORKS
CONSTRUCTION PERMIT APPLICATION
BLAST FURNACE NO.13 RELINE
CHANGE IN EMISSION RATES FROM PROCESS SOURCES

NO_X

All Additional Hot Metal Through No. 1 BOP

Emission Unit	Emission Location	Annual Production/ Throughput Change	Units (tons)	Emission Factor	Units	Capture Efficiency	Control Efficiency	Annual Change in Emissions		Source of Emission Factor
								(tons/yr)	(lbs/hr)	
No. 13 Blast Furnace	Casthouse Fugitives	609,592	hot metal	0.0248	lb/ton	99.80%	N/A	0.0151	0.0035	ISPAT Inland Stack Test
	Casthouse Emission Control Baghouse	609,592	hot metal	0.0248	lb/ton	99.80%	0.00%	7.5438	1.7223	ISPAT Inland Stack Test
	Slag Pit Operations	152,398	slag	0.0137	lb/ton	0.00%	0.00%	1.0439	0.2383	ISPAT Inland Permit Application
PCI	Coal Pulverizer Bldg.	91,439	coal	0.000	lb/ton	N/A	N/A	0.0000	0.0000	Not Applicable
No. 1 BOP Shop	Fugitives (Roof Monitor)					N/A	N/A	0.0913	0.0208	See NOx Fugitive Emission Calculation Table
	Gas Cleaning System (2 units)	717,167	molten steel	0.0800	lb/ton	99.72%	0.00%	28.6064	6.5311	AIRS
	Hot Metal Desulfurization Baghouse	609,592	hot metal	0.0024	lb/ton	98.50%	0.00%	0.7205	0.1645	ISPAT Inland Stack Test
	Continuous Casting	717,167	molten steel	0.00	lb/ton	0.00%	0.00%	0.0000	0.0000	Not Applicable
	CAS Bell/OB Lancing Baghouse	717,167	molten steel	0.0000	lb/ton	94.99%	0.00%	0.0000	0.0000	Not Applicable
	Flux Handling Baghouse	717,167	molten steel	0.0000	lb/ton	99.00%	0.00%	0.0000	0.0000	No combustion
No. 1 BOP Caster	Fugitives (Roof Monitor)	717,167	molten steel	0.0000	lb/ton	0.00%	N/A	0.0000	0.0000	Not Applicable

Table 3-5
US STEEL GARY WORKS
CONSTRUCTION PERMIT APPLICATION
BLAST FURNACE NO.13 RELINE
CHANGE IN EMISSION RATES FROM PROCESS SOURCES
NO_X
All Additional Hot Metal Through No. 1 BOP

Emission Unit	Emission Location	Annual Production/ Throughput Change	Units (tons)	Emission Factor	Units	Capture Efficiency	Control Efficiency	Annual Change in Emissions		Source of Emission Factor
								(tons/yr)	(lbs/hr)	
No. 2 Q-BOP Shop LMF	Fugitives (Roof Monitor)					N/A	N/A	0.0000	0.0000	See NOx Fugitive Emission Calculation Table
	Gas Cleaning System (2 units)	0	molten steel	0.08	lb/ton	99.72%	0.00%	0.0000	0.0000	AIRS
	Hot Metal Desulfurization Baghouse	0	hot metal	0.0024	lb/ton	99.40%	0.00%	0.0000	0.0000	ISPAT Inland Stack Test
	Continuous Casting	0	molten steel	0.00	lb/ton	95.00%	0.00%	0.0000	0.0000	Not Applicable
	Secondary Emissions Baghouse	0	molten steel	0.0000	lb/ton	99.72%	0.00%	0.0000	0.0000	Not Applicable
	116' Elevation North and South Flux Handling System Baghouses	0	molten steel	0.00	lb/ton	99.00%	0.00%	0.0000	0.0000	Not Applicable
	North Roof Baghouse (166')	0	molten steel	0.00	lb/ton	99.00%	0.00%	0.0000	0.0000	Not Applicable
	South Roof Baghouse (166')	0	molten steel	0.00	lb/ton	99.00%	0.00%	0.0000	0.0000	Not Applicable
	Middle Roof Baghouse (166')	0	molten steel	0.00	lb/ton	99.00%	0.00%	0.0000	0.0000	Not Applicable
	Day Tank Lime Silo Baghouse	0	molten steel	0.00	lb/ton	99.00%	0.00%	0.0000	0.0000	Not Applicable
	Lime Dump Station Baghouse	0	molten steel	0.00	lb/ton	99.00%	0.00%	0.0000	0.0000	Not Applicable
	No. 1 Hot Fume Exhaust Baghouse	0	molten steel	0.003	lb/ton	94.99%	0.00%	0.0000	0.0000	Inland Steel EAF Shop modifications construction permit application submitted March 1994
	No. 2 Hot Fume Exhaust Baghouse	0	molten steel	0.003	lb/ton	94.99%	0.00%	0.0000	0.0000	Inland Steel EAF Shop modifications construction permit application submitted
	LMF 1 & 2 Material Handling System	0	molten steel	0.00	lb/ton	95.00%	0.00%	0.0000	0.0000	Not Applicable
	No. 3 LMF Hot Fume Extracation Exhaust	0	molten steel	0.003	lb/ton	97.99%	0.00%	0.0000	0.0000	Inland Steel EAF Shop modifications construction permit application submitted March 1994
	RH Vacuum Degasser Slag Conditioning Baghouse	0	molten steel	0.00015	lb/ton	100.00%	0.00%	0.0000	0.0000	Permit Application for PH Vacuum Degasser (October 1988)
	No. 3 LMF Material Handling System	0	molten steel	0.00000	lb/ton	97.99%	0.00%	0.0000	0.0000	Not Applicable
No. 2 Q-BOP Caster	Fugitives (Roof Monitor)	0	molten steel	0.0000	lb/ton	95.00%	N/A	0.0000	0.0000	Source registration notification submitted April 1995

Table 3-5a
US STEEL GARY WORKS
CONSTRUCTION PERMIT APPLICATION
BLAST FURNACE NO.13 RELINE
FUGITIVE EMISSION CALCULATION

NO_x

All Additional Hot Metal Through No. 1 BOP

Emission Unit	Emission Location	Annual Production/ Throughput Change	Units (tons)	Emission Factor	Units	Capture Efficiency	Annual Change in Emissions		Source of Emission Factor
							(tons/yr)	(lbs/hr)	
No. 1 BOP Shop	Gas Cleaning System (2 units)	717,167	molten steel	0.08	lb/ton	99.72%	0.0803	0.0183	Gas Cleaning System Factor
	Hot Metal Desulfurization Baghouse	609,592	hot metal	0.0024	lb/ton	98.50%	0.0110	0.0025	Hot Metal Desulf Factor
	CAS Bell Baghouse	717,167	molten steel	0.0000	lb/ton	94.99%	0.0000	0.0000	Not Applicable
	Flux Handling Baghouse	717,167	molten steel	0.0000	lb/ton	99.00%	0.0000	0.0000	Not Applicable
						Total Fugitives	0.091	0.021	
No. 2 Q-BOP Shop & LMF	Gas Cleaning System (2 units)	0	molten steel	0.08	lb/ton	99.72%	0.0000	0.0000	Gas Cleaning System Factor
	Hot Metal Desulfurization Baghouse	0	hot metal	0.0024	lb/ton	99.40%	0.0000	0.0000	Hot Metal Desulf Factor
	No. 1 Hot Fume Exhaust Baghouse	0	molten steel	0.003	lb/ton	94.99%	0.0000	0.0000	No. 1 Hot Fume Exhaust Factor
	No. 2 Hot Fume Exhaust Baghouse	0	molten steel	0.003	lb/ton	94.99%	0.0000	0.0000	No. 2 Hot Fume Exhaust Factor
	LMF 1 & 2 Material Handling System	0	molten steel	0.00	lb/ton	95.00%	0.0000	0.0000	Not Applicable
	No. 3 LMF Hot Fume Extracation Exhaust	0	molten steel	0.003	lb/ton	97.99%	0.0000	0.0000	No.3 LMF Hot Fume Extracation Factor
	RH Vacuum Degasser Slag Conditioning Baghouse	0	molten steel	0.00015	lb/ton	100.00%	0.0000	0.0000	RH Vacuum Degasser Factor
	LMF 3 Material Handling System	0	molten steel	0.00000	lb/ton	97.99%	0.0000	0.0000	Not Applicable
						Total Fugitives	0.0000	0.0000	

Table 3-6
US STEEL GARY WORKS
CONSTRUCTION PERMIT APPLICATION
BLAST FURNACE NO.13 RELINE
CHANGE IN EMISSION RATES FROM PROCESS SOURCES
CO

All Additional Hot Metal Through No. 1 BOP

Emission Unit	Emission Location	Annual Production/ Throughput Change	Units (tons)	Emission Factor	Units	Capture Efficiency	Control Efficiency	Annual Change in Emissions		Source of Emission Factor
								(tons/yr)	(lbs/hr)	
No. 13 Blast Furnace	Casthouse Fugitives	609,592	hot metal	0.000	lb/ton	99.80%	N/A	0.0000	0.0000	Not Applicable
	Casthouse Emission Control Baghouse	609,592	hot metal	0.000	lb/ton	99.80%	0.00%	0.0000	0.0000	Not Applicable
	Slag Pit Operations	152,398	slag	0.070	lb/ton	0.00%	0.00%	5.3530	1.2221	ISPAT Inland Permit Application
PCI	Coal Pulverizer Bldg.	91,439	coal	0.000	lb/ton	N/A	N/A	0.0000	0.0000	Not Applicable
No. 1 BOP Shop	Fugitives (Roof Monitor)					N/A	N/A	138.5567	31.6339	See CO Fugitive Emission Calculation Table
	Gas Cleaning System (2 units)	717,167	molten steel	138.00	lb/ton	99.72%	94.35%	2788.0473	636.5405	AIRS, Carbon Balance and March 1996 Stack Test
	Hot Metal Desulfurization Baghouse	609,592	hot metal	0.00	lb/ton	98.50%	0.00%	0.0000	0.0000	Not Applicable
	Continuous Casting	717,167	molten steel	0.00	lb/ton	0.00%	0.00%	0.0000	0.0000	Not Applicable
	CAS Bell/OB Lancing Baghouse	717,167	molten steel	0.0000	lb/ton	94.99%	0.00%	0.0000	0.0000	Not Applicable
	Flux Handling Baghouse	717,167	molten steel	0.0000	lb/ton	99.00%	0.00%	0.0000	0.0000	Not Applicable
No. 1 BOP Caster	Fugitives (Roof Monitor)	717,167	molten steel	0.0000	lb/ton	0.00%	N/A	0.0000	0.0000	Not Applicable

Table 3-6
US STEEL GARY WORKS
CONSTRUCTION PERMIT APPLICATION
BLAST FURNACE NO.13 RELINE
CHANGE IN EMISSION RATES FROM PROCESS SOURCES
CO
All Additional Hot Metal Through No. 1 BOP

Emission Unit	Emission Location	Annual Production/ Throughput Change	Units (tons)	Emission Factor	Units	Capture Efficiency	Control Efficiency	Annual Change in Emissions		Source of Emission Factor
								(tons/yr)	(lbs/hr)	
No. 2 Q-BOP Shop LMF	Fugitives (Roof Monitor)					N/A	N/A	0.0000	0.0000	See CO Fugitive Emission Calculation Table
	Gas Cleaning System (2 units)	0	molten steel	138.00	lb/ton	99.72%	94.35%	0.0000	0.0000	AIRS, Carbon Balance and March 1996 Stack Test
	Hot Metal Desulfurization Baghouse	0	hot metal	0.00	lb/ton	99.40%	0.00%	0.0000	0.0000	Not Applicable
	Continuous Casting	0	molten steel	0.00	lb/ton	95.00%	0.00%	0.0000	0.0000	Not Applicable
	Secondary Emissions Baghouse	0	molten steel	0.00	lb/ton	99.72%	0.00%	0.0000	0.0000	Not Applicable
	116' Elevation North and South Flux Handling System Baghouses	0	molten steel	0.00	lb/ton	99.00%	0.00%	0.0000	0.0000	Not Applicable
	North Roof Baghouse (166')	0	molten steel	0.00	lb/ton	99.00%	0.00%	0.0000	0.0000	Not Applicable
	South Roof Baghouse (166')	0	molten steel	0.00	lb/ton	99.00%	0.00%	0.0000	0.0000	Not Applicable
	Middle Roof Baghouse (166')	0	molten steel	0.00	lb/ton	99.00%	0.00%	0.0000	0.0000	Not Applicable
	Day Tank Lime Silo Baghouse	0	molten steel	0.00	lb/ton	99.00%	0.00%	0.0000	0.0000	Not Applicable
	Lime Dump Station Baghouse	0	molten steel	0.00	lb/ton	99.00%	0.00%	0.0000	0.0000	Not Applicable
	No. 1 Hot Fume Exhaust Baghouse	0	molten steel	0.05	lb/ton	94.99%	0.00%	0.0000	0.0000	Inland Steel EAF Shop modifications construction permit application submitted March 1994
	No. 2 Hot Fume Exhaust Baghouse	0	molten steel	0.05	lb/ton	94.99%	0.00%	0.0000	0.0000	Inland Steel EAF Shop modifications construction permit application submitted March 1994
	LMF 1 & 2 Material Handling System	0	molten steel	0.00	lb/ton	95.00%	0.00%	0.0000	0.0000	Not Applicable
	No. 3 LMF Hot Fume Extracation Exhaust	0	molten steel	0.05	lb/ton	97.99%	0.00%	0.0000	0.0000	Inland Steel EAF Shop modifications construction permit application submitted March 1994
	RH Vacuum Degasser Slag Conditioning Baghouse	0	molten steel	0.887	lb/ton	100.00%	0.00%	0.0000	0.0000	Weight percent of carbon in steel before and after degassing process. Assume all carbon removed during the degassing process is converted to CO.
	No. 3 LMF Material Handling System	0	molten steel	0.000	lb/ton	97.99%	0.00%	0.0000	0.0000	Not Applicable
No. 2 Q-BOP Caster	Fugitives (Roof Monitor)	0	molten steel	0.0000	lb/ton	95.00%	N/A	0.0000	0.0000	Source registration notification submitted April 1995

Table 3-6a
US STEEL GARY WORKS
CONSTRUCTION PERMIT APPLICATION
BLAST FURNACE NO.13 RELINE
FUGITIVE EMISSION CALCULATION

CO

All Additional Hot Metal Through No. 1 BOP

Emission Unit	Emission Location	Annual Production/ Throughput Change	Units (tons)	Emission Factor	Units	Capture Efficiency	Annual Change in Emissions (tons/yr)	Annual Change in Emissions (lbs/hr)	Source of Emission Factor
No. 1 BOP Shop	Gas Cleaning System (2 units)	717,167	molten steel	138.00	lb/ton	99.72%	138.5567	31.6339	Gas Cleaning System Factor
	Hot Metal Desulfurization Baghouse	609,592	hot metal	0.00	lb/ton	98.50%	0.0000	0.0000	Not Applicable
	CAS Bell Baghouse	717,167	molten steel	0.0000	lb/ton	94.99%	0.0000	0.0000	Not Applicable
	Flux Handling Baghouse	717,167	molten steel	0.0000	lb/ton	99.00%	0.0000	0.0000	Not Applicable
						Total Fugitives	138.557	31.634	
No. 2 Q-BOP Shop & LMF	Gas Cleaning System (2 units)	0	molten steel	138.00	lb/ton	99.72%	0.0000	0.0000	Gas Cleaning System Factor
	Hot Metal Desulfurization Baghouse	0	hot metal	0.00	lb/ton	99.40%	0.0000	0.0000	Not Applicable
	No. 1 Hot Fume Exhaust Baghouse	0	molten steel	0.05	lb/ton	94.99%	0.0000	0.0000	No.1 Hot Furme Exhaust Factor
	No. 2 Hot Fume Exhaust Baghouse	0	molten steel	0.05	lb/ton	94.99%	0.0000	0.0000	No.2 Hot Fumre Exhaust Factor
	LMF 1 & 2 Material Handling System	0	molten steel	0.00	lb/ton	95.00%	0.0000	0.0000	Not Applicable
	No. 3 LMF Hot Fume Extracation Exhaust	0	molten steel	0.05	lb/ton	97.99%	0.0000	0.0000	No.3 LMF Hot Fume Extracation Factor
	RH Vacuum Degasser Slag Conditioning Baghouse	0	molten steel	0.887	lb/ton	100.00%	0.00E+00	0.00E+00	RH Vacuum Degasser Factor
	LMF 3 Material Handling System	0	molten steel	0.000	lb/ton	97.99%	0.0000	0.0000	Not Applicable
						Total Fugitives	0.0000	0.0000	

Table 3-7
US STEEL GARY WORKS
CONSTRUCTION PERMIT APPLICATION
BLAST FURNACE NO.13 RELINE
CHANGE IN EMISSION RATES FROM PROCESS SOURCES
VOC

All Additional Hot Metal Through No. 1 BOP

Emission Unit	Emission Location	Annual Production/ Throughput Change	Units (tons)	Emission Factor	Units	Capture Efficiency %	Control Efficiency	Annual Change in Emissions		Source of Emission Factor
								(tons/yr)	(lbs/hr)	
No. 13 Blast Furnace	Casthouse Fugitives	609,592	hot metal	0.0000	lb/ton	99.80%	0.00%	0.0000	0.0000	Not Applicable
	Casthouse Emission Control Baghouse	609,592	hot metal	0.00000	lb/ton	99.80%	0.00%	0.0000	0.0000	Not Applicable
	Slag Pit Operations	152,398	slag	0.00134	lb/ton	0.00%	0.00%	0.1017	0.0232	ISPAT Inland Permit Application
PCI	Coal Pulverizer Bldg.	91,439	coal	0.000	lb/ton	N/A	N/A	0.0000	0.0000	Not Applicable
No. 1 BOP Shop	Fugitives (Roof Monitor)					N/A	N/A	0.0066	0.0015	See VOC Fugitive Emission Calculation Table
	Gas Cleaning System (2 units)	717,167	molten steel	0.002	lb/ton	99.72%	0.00%	0.7152	0.1633	AIRS
	Hot Metal Desulfurization Baghouse	609,592	hot metal	0.001	lb/ton	98.50%	0.00%	0.3002	0.0685	AIRS
	Continuous Casting	717,167	molten steel	0.000	lb/ton	0.00%	0.00%	0.0000	0.0000	Not Applicable
	CAS Bell/OB Lancing Baghouse	717,167	molten steel	0.00000	lb/ton	94.99%	0.00%	0.0000	0.0000	Source registration notification submitted April 1995
	Flux Handling Baghouse	717,167	molten steel	0.00000	lb/ton	99.00%	0.00%	0.0000	0.0000	Not Applicable
No. 1 BOP Caster	Fugitives (Roof Monitor)	717,167	molten steel	0.00000	lb/ton	0.00%	N/A	0.0000	0.0000	Not Applicable

Table 3-7

US STEEL GARY WORKS
CONSTRUCTION PERMIT APPLICATION
BLAST FURNACE NO.13 RELINE
CHANGE IN EMISSION RATES FROM PROCESS SOURCES

VOC

All Additional Hot Metal Through No. 1 BOP

Emission Unit	Emission Location	Annual Production/ Throughput Change	Units (tons)	Emission Factor	Units	Capture Efficiency	Control Efficiency	Annual Change in Emissions		Source of Emission Factor
								(tons/yr)	(lbs/hr)	
No. 2 Q-BOP Shop LMF	Fugitives (Roof Monitor)					N/A	N/A	0.0000	0.0000	See VOC Fugitive Emission Calculation Table
	Gas Cleaning System (2 units)	0	molten steel	0.002	lb/ton	99.72%	0.00%	0.0000	0.0000	AIRS
	Hot Metal Desulfurization Baghouse	0	hot metal	0.001	lb/ton	99.40%	0.00%	0.0000	0.0000	AIRS
	Continuous Casting	0	molten steel	0.000	lb/ton	95.00%	0.00%	0.0000	0.0000	Not Applicable
	Secondary Emissions Baghouse	0	molten steel	0.000	lb/ton	99.72%	0.00%	0.0000	0.0000	Not Applicable
	116' Elevation North and South Flux Handling System Baghouses	0	molten steel	0.000	lb/ton	99.00%	0.00%	0.0000	0.0000	Not Applicable
	North Roof Baghouse (166')	0	molten steel	0.00	lb/ton	99.00%	0.00%	0.0000	0.0000	Not Applicable
	South Roof Baghouse (166')	0	molten steel	0.00	lb/ton	99.00%	0.00%	0.0000	0.0000	Not Applicable
	Middle Roof Baghouse (166')	0	molten steel	0.00	lb/ton	99.00%	0.00%	0.0000	0.0000	Not Applicable
	Day Tank Lime Silo Baghouse	0	molten steel	0.00	lb/ton	99.00%	0.00%	0.0000	0.0000	Not Applicable
	Lime Dump Station Baghouse	0	molten steel	0.00	lb/ton	99.00%	0.00%	0.0000	0.0000	Not Applicable
	No. 1 Hot Fume Exhaust Baghouse	0	molten steel	0.000	lb/ton	94.99%	0.00%	0.0000	0.0000	Not Applicable
	No. 2 Hot Fume Exhaust Baghouse	0	molten steel	0.000	lb/ton	94.99%	0.00%	0.0000	0.0000	Not Applicable
	LMF 1 & 2 Material Handling System	0	molten steel	0.000	lb/ton	95.00%	0.00%	0.0000	0.0000	Not Applicable
	No. 3 LMF Hot Fume Extracation Exhaust	0	molten steel	0.000	lb/ton	97.99%	0.00%	0.0000	0.0000	Not Applicable
	RH Vacuum Degasser Slag Conditioning Baghouse	0	molten steel	0.000	lb/ton	100.00%	0.00%	0.0000	0.0000	Not Applicable
	No. 3 LMF Material Handling System	0	molten steel	0.000	lb/ton	97.99%	0.00%	0.0000	0.0000	Not Applicable
No. 2 Q-BOP Caster	Fugitives (Roof Monitor)	0	molten steel	0.00000	lb/ton	95.00%	N/A	0.0000	0.0000	Not Applicable

* - See Table 5, Attachment 1

Table 3-7a
US STEEL GARY WORKS
CONSTRUCTION PERMIT APPLICATION
BLAST FURNACE NO.13 RELINE
FUGITIVE EMISSION CALCULATION

VOC

All Additional Hot Metal Through No. 1 BOP

Emission Unit	Emission Location	Annual Production/ Throughput Change	Units (tons)	Emission Factor	Units	Capture Efficiency	Annual Change in Emissions		Source of Emission Factor
							(tons/yr)	(lbs/hr)	
No. 1 BOP Shop	Gas Cleaning System (2 units)	717,167	molten steel	0.002	lb/ton	99.72%	0.0020	0.0005	Gas Cleaning System Factor
	Hot Metal Desulfurization Baghouse	609,592	hot metal	0.001	lb/ton	98.50%	0.0046	0.0010	Hot Metal Desulf Factor
	CAS Bell Baghouse	717,167	molten steel	0.00000	lb/ton	94.99%	0.0000	0.0000	Not Applicable
	Flux Handling Baghouse	717,167	molten steel	0.00000	lb/ton	99.00%	0.0000	0.0000	Not Applicable
						Total Fugitives	0.007	0.002	
No. 2 Q-BOP Shop & LMF	Gas Cleaning System (2 units)	0	molten steel	0.002	lb/ton	99.72%	0.0000	0.0000	Gas Cleaning System Factor
	Hot Metal Desulfurization Baghouse	0	hot metal	0.001	lb/ton	99.40%	0.0000	0.0000	Hot Metal Desulf Factor
	No. 1 Hot Fume Exhaust Baghouse	0	molten steel	0.000	lb/ton	94.99%	0.0000	0.0000	Not Applicable
	No. 2 Hot Fume Exhaust Baghouse	0	molten steel	0.000	lb/ton	94.99%	0.0000	0.0000	Not Applicable
	LMF 1 & 2 Material Handling System	0	molten steel	0.000	lb/ton	95.00%	0.0000	0.0000	Not Applicable
	No. 3 LMF Hot Fume Extracation Exhaust	0	molten steel	0.000	lb/ton	97.99%	0.0000	0.0000	Not Applicable
	RH Vacuum Degasser Slag Conditioning Baghouse	0	molten steel	0.000	lb/ton	100.00%	0.0000	0.0000	Not Applicable
	LMF 3 Material Handling System	0	molten steel	0.000	lb/ton	97.99%	0.0000	0.0000	Not Applicable
						Total Fugitives	0.0000	0.0000	Not Applicable

Table 3-8

US STEEL GARY WORKS
CONSTRUCTION PERMIT APPLICATION
BLAST FURNACE NO.13 RELINE
CHANGE IN EMISSION RATES FROM COMBUSTION SOURCES

PM

All Additional Hot Metal Through No. 1 BOP

Emission Unit	Emission Location	Throughput Change	Units	Emission Factor	Units	Capture Efficiency	Control Efficiency	Annual Change in Emissions		Source of Emission Factor
								(tons/yr)	(lbs/hr)	
Blast Furnace No. 13	Stoves (NG)	254	mmcf	7.60	lb/mmcf	100.00%	0.00%	0.967	0.2207	AP-42
	Stoves (BFG)	8,047	mmcf	2.90	lb/mmcf	100.00%	0.00%	11.667	2.6638	AIRS
						Total Stoves		12.634	2.885	
TBBH Boilers	TBBH Boilers (BFG)	22,433	mmcf	2.90	lb/mmcf	100.00%	0.00%	32.528	7.4265	AIRS
						Total Boiler House		32.528	7.426	

Table 3-9
US STEEL GARY WORKS
CONSTRUCTION PERMIT APPLICATION
BLAST FURNACE NO.13 RELINE
CHANGE IN EMISSION RATES FROM COMBUSTION SOURCES

PM_{10}

All Additional Hot Metal Through No. 1 BOP

Emission Unit	Emission Location	Throughput Change	Units	Emission Factor	Units	Capture Efficiency	Control Efficiency	Annual Change in Emissions		Source of Emission Factor
								(tons/yr)	(lbs/hr)	
Blast Furnace No. 13	Stoves (NG)	254	mmcf	7.60	lb/mmcf	100.00%	0.00%	0.967	0.2207	AP-42
	Stoves (BFG)	8,047	mmcf	0.96	lb/mmcf	100.00%	0.00%	3.862	0.8818	Oct. 11, 2001 - Stack Test on No. 6 Boiler (100% BFG)
						Total Stoves		4.829	1.1026	
TBBH Boilers	TBBH Boilers (BFG)	22,433	mmcf	0.96	lb/mmcf	100.00%	0.00%	10.768	2.4584	Oct. 11, 2001 - Stack Test on No. 6 Boiler (100% BFG)
						Total Boiler House		10.768	2.458	

Table 3-10
US STEEL GARY WORKS
CONSTRUCTION PERMIT APPLICATION
BLAST FURNACE NO.13 RELINE
CHANGE IN EMISSION RATES FROM COMBUSTION SOURCES

SO_2

All Additional Hot Metal Through No. 1 BOP

Emission Unit	Emission Location	Throughput Change	Units	Emission Factor	Units	Capture Efficiency	Control Efficiency	Annual Change in Emissions		Source of Emission Factor
								(tons/yr)	(lbs/hr)	
Blast Furnace No. 13	Stoves (NG)	254	mmcf	0.60	lb/mmcf	100.00%	0.00%	0.076	0.0174	AP-42 (1998)
	Stoves (BFG)	8,047	mmcf	6.39	lb/mmcf	100.00%	0.00%	25.709	5.8696	IDEM SO2 Quarterly Report
						Total Stoves		25.785	5.887	
TBBH Boilers	TBBH Boilers (BFG)	22,433	mmcf	6.39	lb/mmcf	100.00%	0.00%	71.674	16.3638	IDEM SO2 Quarterly Report
						Total Boiler House		71.674	16.364	

Table 3-11
US STEEL GARY WORKS
CONSTRUCTION PERMIT APPLICATION
BLAST FURNACE NO.13 RELINE
CHANGE IN EMISSION RATES FROM COMBUSTION SOURCES

NO_X

All Additional Hot Metal Through No. 1 BOP

Emission Unit	Emission Location	Throughput Change	Units	Emission Factor	Units	Capture Efficiency	Control Efficiency	Annual Change in Emissions		Source of Emission Factor
								(tons/yr)	(lbs/hr)	
Blast Furnace No. 13	Stoves (NG)	254	mmcf	280.00	lb/mmcf	100.00%	0.00%	35.620	8.1325	AP-42 (1998)
	Stoves (BFG)	8,047	mmcf	0.61	lb/mmcf	100.00%	0.00%	2.454	0.5603	RATA Testing on Jan 2004
						Total Stoves		38.074	8.693	
TBBH Boilers	TBBH Boilers (BFG)	22,433	mmcf	0.61	lb/mmcf	100.00%	0.00%	6.842	1.5621	RATA Testing on Jan 2004
						Total Boiler House		6.84	1.56	

Table 3-12
US STEEL GARY WORKS
CONSTRUCTION PERMIT APPLICATION
BLAST FURNACE NO.13 RELINE
CHANGE IN EMISSION RATES FROM COMBUSTION SOURCES

CO

All Additional Hot Metal Through No. 1 BOP

Emission Unit	Emission Location	Throughput Change	Units	Emission Factor	Units	Capture Efficiency	Control Efficiency	Annual Change in Emissions		Source of Emission Factor
								(tons/yr)	(lbs/hr)	
Blast Furnace No. 13	Stoves (NG)	254	mmcf	84.00	lb/mmcf	100.00%	0.00%	10.686	2.4397	AP-42 (1998)
	Stoves (BFG)	8,047	mmcf	26.50	lb/mmcf	100.00%	0.00%	106.617	24.3417	Stack tests at TBBH No. 4
						Total Stoves		117.303	26.781	
TBBH Boilers	TBBH Boilers (BFG)	22,433	mmcf	26.50	lb/mmcf	100.00%	0.00%	297.238	67.8626	Stack tests at TBBH No. 4
						Total Boiler House		297.238	67.863	

Table 3-13
US STEEL GARY WORKS
CONSTRUCTION PERMIT APPLICATION
BLAST FURNACE NO.13 RELINE
CHANGE IN EMISSION RATES FROM COMBUSTION SOURCES

VOC

All Additional Hot Metal Through No. 1 BOP

Emission Unit	Emission Location	Throughput Change	Units	Emission Factor	Units	Capture Efficiency	Control Efficiency	Annual Change in Emissions		Source of Emission Factor
								(tons/yr)	(lbs/hr)	
Blast Furnace No. 13	Stoves (NG)	254	mmcf	5.50	lb/mmcf	100.00%	0.00%	0.700	0.1597	AP-42 (1998)
	Stoves (BFG)	8,047	mmcf	0.00	lb/mmcf	100.00%	0.00%	0.000	0.0000	AIRS
						Total Stoves		0.700	0.160	
TBBH Boilers	TBBH Boilers (BFG)	22,433	mmcf	0.00	lb/mmcf	100.00%	0.00%	0.000	0.0000	AIRS
						Total Boiler House		0.000	0.000	

Table 3-14
US STEEL GARY WORKS
CONSTRUCTION PERMIT APPLICATION
BLAST FURNACE NO.13 RELINE
CHANGE IN EMISSION RATES FROM PROCESS SOURCES
PM
All Additional Hot Metal Through No. 2 Q-BOP

Emission Unit	Emission Location	Annual Production/ Throughput Change	Units (tons)	Emission Factor	Units	Capture Efficiency	Control Efficiency	Annual Change in Emissions		Source of Emission Factor
								(tons/yr)	(lbs/hr)	
No. 13 Blast Furnace	Casthouse Fugitives *	609,592	hot metal	0.60	lb/ton	99.80%	N/A	0.1097	0.0251	AP-42
	Casthouse Emission Control Baghouse	256	hours	0.0024	lb/ton	N/A	N/A	0.0003	0.0001	SIP Limit (Controlled Emissions)
	Slag Pit Operations	152,398	slag	0.106	lb/ton	0.00%	0.00%	8.0771	1.8441	ISPAT Inland Permit Application
PCI	Coal Pulverizer Bldg.	91,439	coal	0.008	lb/ton	N/A	N/A	0.3658	0.0835	Ispat Inland PCI Controlled Emission Factor
No. 1 BOP Shop	Fugitives (Roof Monitor)					N/A	N/A	0.0000	0.0000	See PM Fugitive Emission Calculation Table
	Gas Cleaning System (2 units)	0	molten steel	36.97	lb/ton	99.72%	99.90%	0.0000	0.0000	AP-42
	Hot Metal Desulfurization Baghouse	0	hours	15.00	lb/hr	N/A	N/A	0.0000	0.0000	SIP Limit (Controlled Emissions)
	Continuous Casting	0	molten steel	0.014	lb/ton	0.00%	0.00%	0.0000	0.0000	PM10 SIP Background Documentation for No. 2 Caster
	CAS Bell/OB Lancing Baghouse	0	hours	5.100	lb/hr	N/A	N/A	0.0000	0.0000	SIP Limit (Controlled Emissions)
	Flux Handling Baghouse	0	hours	1.920	lb/hr	N/A	N/A	0.0000	0.0000	SIP Modeling Limit
No. 1 BOP Caster	Fugitives (Roof Monitor) *	0	molten steel	0.014	lb/ton	0.00%	N/A	0.0000	0.0000	PM10 SIP Background Documentation for No. 2 Caster

Table 3-14
US STEEL GARY WORKS
CONSTRUCTION PERMIT APPLICATION
BLAST FURNACE NO.13 RELINE
CHANGE IN EMISSION RATES FROM PROCESS SOURCES
PM
All Additional Hot Metal Through No. 2 Q-BOP

Emission Unit	Emission Location	Annual Production/ Throughput Change	Units (tons)	Emission Factor	Units	Capture Efficiency	Control Efficiency	Annual Change in Emissions		Source of Emission Factor
								(tons/yr)	(lbs/hr)	
No. 2 Q-BOP Shop LMF	Fugitives (Roof Monitor)					N/A	N/A	12.7917	2.9205	See PM Fugitive Emission Calculation Table
	Gas Cleaning System (2 units)	717,167	molten steel	36.960	lb/ton	99.72%	99.90%	13.2161	3.0174	AP-42
	Hot Metal Desulfurization Baghouse	350	hours	13.000	lb/hr	N/A	N/A	2.2750	0.5194	SIP Limit (Controlled Emissions)
	Continuous Casting *	717,167	molten steel	0.014	lb/ton	95.00%	99.99%	0.0001	0.0000	PM10 SIP Background Documentation for No. 2 Caster
	Secondary Emissions Baghouse	350	hours	27.000	lb/hr	N/A	N/A	4.7250	1.0788	SIP Limit (Controlled Emissions)
	116' Elevation North and South Flux Handling System Baghouses	350	hours	1.800	lb/hr	N/A	N/A	0.3150	0.0719	SIP Limit (Controlled Emissions)
	North Roof Baghouse (166')	350	hours	0.510	lb/hr	N/A	N/A	0.0893	0.0204	SIP Limit (Controlled Emissions)
	South Roof Baghouse (166')	350	hours	0.510	lb/hr	N/A	N/A	0.0893	0.0204	SIP Limit (Controlled Emissions)
	Middle Roof Baghouse (166')	350	hours	0.510	lb/hr	N/A	N/A	0.0893	0.0204	SIP Limit (Controlled Emissions)
	Day Tank Lime Silo Baghouse	350	hours	0.810	lb/hr	N/A	N/A	0.1418	0.0324	SIP Modeling Limit
	Lime Dump Station Baghouse	350	hours	0.450	lb/hr	N/A	N/A	0.0788	0.0180	SIP Modeling Limit
	No. 1 Hot Fume Exhaust Baghouse	350	hours	5.100	lb/hr	N/A	N/A	0.8925	0.2038	SIP Limit (Controlled Emissions)
	No. 2 Hot Fume Exhaust Baghouse	350	hours	5.1	lb/hr	N/A	N/A	0.8925	0.2038	SIP Limit (Controlled Emissions)
	LMF 1 & 2 Material Handling System	350	hours	3.830	lb/hr	N/A	N/A	0.6703	0.1530	SIP Limit (Controlled Emissions)
	No. 3 LMF Hot Fume Extracation Exhaust	350	hours	2.700	lb/hr	N/A	N/A	0.4725	0.1079	SIP Limit (Controlled Emissions)
	RH Vacuum Degasser Slag Conditioning Baghouse	350	hours	5.490	lb/hr	N/A	N/A	0.9608	0.2193	SIP Limit (Controlled Emissions)
	No. 3 LMF Material Handling System	350	hours	0.000	lb/hr	N/A	N/A	0.0000	0.0000	SIP Limit (Controlled Emissions)
No. 2 Q-BOP Caster	Fugitives (Roof Monitor) *	717,167	molten steel	0.014	lb/ton	95.00%	N/A	0.0753	0.0172	PM10 SIP Background Documentation for No. 2 Caster

* - Emission unit locations where 70% containment efficiency was applied to the controlled annual change in emissions

Table 3-14a
US STEEL GARY WORKS
CONSTRUCTION PERMIT APPLICATION
BLAST FURNACE NO.13 RELINE
FUGITIVE EMISSION CALCULATION

PM

All Additional Hot Metal Through No. 2 Q-BOP

Emission Unit	Emission Location	Annual Production/ Throughput Change	Units (tons)	Emission Factor	Units	Capture Efficiency	Annual Change in Emissions		Source of Emission Factor
							(tons/yr)	(lbs/hr)	
No. 1 BOP Shop	Gas Cleaning System (2 units)	0	molten steel	36.96	lb/ton	99.72%	0.0000	0.0000	AP-42
	Hot Metal Desulfurization Baghouse *	0	hot metal	1.09	lb/ton	98.50%	0.0000	0.0000	AP-42
	CAS Bell Baghouse	0	molten steel	0.0640	lb/ton	94.99%	0.0000	0.0000	Source Registration Notification (April 1995)
	Flux Handling Baghouse	0	molten steel	0.0190	lb/ton	99.00%	0.0000	0.0000	AP-42
Total Fugitives (Roof Monitor - 70% Building Containment Efficiency where applicable)							0.000	0.000	
No. 2 Q-BOP Shop & LMF	Gas Cleaning System (2 units)	717,167	molten steel	36.7900	lb/ton	99.72%	11.0815	2.5300	AP-42
	Hot Metal Desulfurization Baghouse	609,592	hot metal	1.2590	lb/ton	99.40%	0.6907	0.1577	AP-42
	No. 1 Hot Fume Exhaust Baghouse	239,056	molten steel	0.17	lb/ton	94.99%	0.3054	0.0697	Gary Works No. 3 LMF CPA Addendum (April 1995)
	No. 2 Hot Fume Exhaust Baghouse	239,056	molten steel	0.17	lb/ton	94.99%	0.3054	0.0697	Gary Works No. 3 LMF CPA Addendum (April 1995)
	LMF 1 & 2 Material Handling System	478,111	molten steel	0.019	lb/ton	95.00%	0.0681	0.0156	AP-42
	No. 3 LMF Hot Fume Extracation Exhaust/ Material Handling	239,056	molten steel	0.17	lb/ton	97.99%	0.1225	0.0280	Gary Works No. 3 LMF CPA Addendum (April 1995)
	RH Vacuum Degasser Slag Conditioning Baghouse	133,185	molten steel	0.165	lb/ton	100.00%	0.0000	0.0000	Nippon Steel Test
	116' Elevation North and South Flux Handling Baghouse	717,167	molten steel	0.019	lb/ton	99.00%	0.0204	0.0047	Same as LMF Material Handling
	North Roof Baghouse (166')	717,167	molten steel	0.019	lb/ton	99.00%	0.0204	0.0047	Same as LMF Material Handling
	South Roof Baghouse (166')	717,167	molten steel	0.019	lb/ton	99.00%	0.0204	0.0047	Same as LMF Material Handling
	Middle Roof Baghouse (166')	717,167	molten steel	0.019	lb/ton	99.00%	0.0204	0.0047	Same as LMF Material Handling
	Day Tank Lime Silo Baghouse *	717,167	molten steel	0.019	lb/ton	99.00%	0.0681	0.0156	Same as LMF Material Handling
	Lime Dump Station Baghouse *	717,167	molten steel	0.019	lb/ton	99.00%	0.0681	0.0156	Same as LMF Material Handling
Total Fugitives (Roof Monitor - 70% Building Containment Efficiency where applicable)							12.7917	2.9205	

* - Emissions Unit Locations where 70% containment efficiency was not applicable.

Table 3-15
US STEEL GARY WORKS
CONSTRUCTION PERMIT APPLICATION
BLAST FURNACE NO.13 RELINE
CHANGE IN EMISSION RATES FROM PROCESS SOURCES
PM_{10}
All Additional Hot Metal Through No. 2 Q-BOP

Emission Unit	Emission Location	Annual Production/ Throughput Change	Units (tons)	Emission Factor	Units	Capture Efficiency	Control Efficiency	Annual Change in Emissions		Source of Emission Factor
								(tons/yr)	(lbs/hr)	
No. 13 Blast Furnace	Casthouse Fugitives *	609,592	hot metal	0.306	lb/ton	99.80%	N/A	0.0560	0.0128	AP-42
	Casthouse Emission Control Baghouse	256	hours	38.570	lbs/hr	N/A	N/A	4.9410	1.1281	SIP Limit (Controlled Emissions)
	Slag Pit Operations	152,398	slag	0.0425	lb/ton	0.00%	0.00%	3.2385	0.7394	ISPAT Inland Permit
PCI	Coal Pulverizer Bldg.	91,439	coal	0.007	lb/ton	N/A	N/A	0.3200	0.0731	Ispat Inland PCI Controlled Emission Factor
No. 1 BOP Shop	Fugitives (Roof Monitor)					N/A	N/A	0.0000	0.0000	See PM10 Fugitive Emission Calculation Table
	Gas Cleaning System (2 units)	0	molten steel	24.40	lb/ton	99.72%	99.90%	0.0000	0.0000	AP-42
	Hot Metal Desulfurization Baghouse	0	hours	15.00	lbs/hr	N/A	N/A	0.0000	0.0000	SIP Limit (Controlled Emissions)
	Continuous Casting	0	molten steel	0.0041	lb/ton	0.00%	0.00%	0.0000	0.0000	PM10 SIP Background Documentation for No. 2 Caster
	CAS Bell/OB Lancing Baghouse	0	hours	5.1000	lbs/hr	N/A	N/A	0.0000	0.0000	SIP Limit (Controlled Emissions)
	Flux Handling Baghouse	0	hours	1.9200	lbs/hr	N/A	N/A	0.0000	0.0000	SIP Modeling Limit
No. 1 BOP Caster	Fugitives (Roof Monitor) *	0	molten steel	0.0041	lb/ton	0.00%	N/A	0.0000	0.0000	PM10 SIP Background Documentation for No. 2 Caster

Table 3-15
US STEEL GARY WORKS
CONSTRUCTION PERMIT APPLICATION
BLAST FURNACE NO.13 RELINE
CHANGE IN EMISSION RATES FROM PROCESS SOURCES
PM_{10}
All Additional Hot Metal Through No. 2 Q-BOP

Emission Unit	Emission Location	Annual Production/ Throughput Change	Units (tons)	Emission Factor	Units	Capture Efficiency	Control Efficiency	Annual Change in Emissions		Source of Emission Factor
								(tons/yr)	(lbs/hr)	
No. 2 Q-BOP Shop LMF	Fugitives (Roof Monitor)					N/A	N/A	8.3113	1.8976	See PM10 Fugitive Emission Calculation Table
	Gas Cleaning System (2 units)	717,167	molten steel	24.1000	lb/ton	99.72%	99.62%	32.4977	7.4196	AP-42
	Hot Metal Dasulfurization Baghouse	350	hours	13.0000	lbs/hr	N/A	N/A	2.2750	0.5194	SIP Limit (Controlled Emissions)
	Continuous Casting *	717,167	molten steel	0.0041	lb/ton	95.00%	99.00%	4.19E-03	9.57E-04	PM10 SIP Background Documentation for No. 2 Caster
	Secondary Emissions Baghouse	350	hours	27.0000	lbs/hr	N/A	N/A	4.7250	1.0788	SIP Limit (Controlled Emissions)
	116' Elevation North and South Flux Handling System Baghouses	350	hours	1.8000	lbs/hr	N/A	N/A	0.3150	0.0719	SIP Limit (Controlled Emissions)
	North Roof Baghouse (166')	350	hours	0.5100	lbs/hr	N/A	N/A	0.0893	0.0204	SIP Limit (Controlled Emissions)
	South Roof Baghouse (166')	350	hours	0.5100	lbs/hr	N/A	N/A	0.0893	0.0204	SIP Limit (Controlled Emissions)
	Middle Roof Baghouse (166')	350	hours	0.5100	lbs/hr	N/A	N/A	0.0893	0.0204	SIP Limit (Controlled Emissions)
	Day Tank Lime Silo Baghouse	350	hours	0.8100	lbs/hr	N/A	N/A	0.1418	0.0324	SIP Modeling Limit
	Lime Dump Station Baghouse	350	hours	0.4500	lbs/hr	N/A	N/A	0.0788	0.0180	SIP Modeling Limit
	No. 1 Hot Fume Exhaust Baghouse	350	hours	5.10	lbs/hr	N/A	N/A	0.8925	0.2038	SIP Limit (Controlled Emissions)
	No. 2 Hot Fume Exhaust Baghouse	350	hours	5.10	lbs/hr	N/A	N/A	0.8925	0.2038	SIP Limit (Controlled Emissions)
	LMF 1 & 2 Material Handling System	350	hours	3.830	lbs/hr	N/A	N/A	0.6703	0.1530	SIP Limit (Controlled Emissions)
	No. 3 LMF Hot Fume Extracation Exhaust/ Material Handling System	350	hours	2.70	lbs/hr	N/A	N/A	0.4725	0.1079	SIP Limit (Controlled Emissions)
	RH Vacuum Degasser Slag Conditioning Baghouse	350	hours	5.49	lbs/hr	N/A	N/A	0.9608	0.2193	SIP Limit (Controlled Emissions)
	LMF 3 Material Handling System	350	hours	0.000	lbs/hr	N/A	N/A	0.0000	0.0000	Not Applicable
No. 2 Q-BOP Caster	Fugitives (Roof Monitor) *	717,167	molten steel	0.0041	lb/ton	95.00%	N/A	0.0221	0.0050	PM10 SIP Background Documentation for No. 2 Caster

* - Emission unit locations where 70% containment efficiency was applied to the controlled annual change in emissions

Table 3-15a
US STEEL GARY WORKS
CONSTRUCTION PERMIT APPLICATION
BLAST FURNACE NO.13 RELINE
FUGITIVE EMISSION CALCULATION

PM_{10}

All Additional Hot Metal Through No. 2-Q-BOP

Emission Unit	Emission Location	Annual Production/ Throughput Change	Units (tons)	Emission Factor	Units	Capture Efficiency	Annual Change in Emissions		Source of Emission Factor
							(tons/yr)	(lbs/hr)	
No. 1 BOP Shop	Gas Cleaning System (2 units)	0	molten steel	24.40	lb/ton	99.72%	0.0000	0.0000	AP-42
	Hot Metal Desulfurization Baghouse *	0	hot metal	0.26	lb/ton	98.50%	0.0000	0.0000	AP-42
	CAS Bell Baghouse	0	molten steel	0.0640	lb/ton	94.99%	0.0000	0.0000	Source Registration Notification (April 1995)
	Flux Handling Baghouse	0	molten steel	0.0090	lb/ton	99.00%	0.0000	0.0000	AP-42
Total Fugitives (Roof Monitor - 70% Building Containment Efficiency where applicable)							0.000	0.000	
No. 2 Q-BOP Shop & LMF	Gas Cleaning System (2 units)	717,167	molten steel	24.1000	lb/ton	99.72%	7.2592	1.6573	AP-42
	Hot Metal Desulfurization Baghouse	609,592	hot metal	0.3340	lb/ton	99.40%	0.1832	0.0418	AP-42
	No. 1 Hot Fume Exhaust Baghouse	239,056	molten steel	0.17	lb/ton	94.99%	0.3054	0.0697	Gary Works No. 3 LMF CPA Addendum (April 1995)
	No. 2 Hot Fume Exhaust Baghouse	239,056	molten steel	0.17	lb/ton	94.99%	0.3054	0.0697	Gary Works No. 3 LMF CPA Addendum (April 1995)
	LMF 1 & 2 Material Handling System	478,111	molten steel	0.009	lb/ton	95.00%	0.0323	0.0074	AP-42
	No. 3 LMF Hot Fume Extracation Exhaust	239,056	molten steel	0.17	lb/ton	97.99%	0.1225	0.0280	Gary Works No. 3 LMF CPA Addendum (April 1995)
	RH Vacuum Degasser Slag Conditioning Baghouse	133,185	molten steel	0.165	lb/ton	100.00%	0.0000	0.0000	Nippon Steel Test
	LMF 3 Material Handling System	239,056	molten steel	0.009	lb/ton	97.99%	0.0065	0.0015	AP-42
	116' Elevation North and South Flux Handling Baghouse	717,167	molten steel	0.009	lb/ton	99.00%	0.0097	0.0022	Same as LMF Material Handling
	North Roof Baghouse (166')	717,167	molten steel	0.009	lb/ton	99.00%	0.0097	0.0022	Same as LMF Material Handling
	South Roof Baghouse (166')	717,167	molten steel	0.009	lb/ton	99.00%	0.0097	0.0022	Same as LMF Material Handling
	Middle Roof Baghouse (166')	717,167	molten steel	0.009	lb/ton	99.00%	0.0097	0.0022	Same as LMF Material Handling
	Day Tank Lime Silo Baghouse *	717,167	molten steel	0.009	lb/ton	99.00%	0.0323	0.0074	Same as LMF Material Handling
	Lime Dump Station Baghouse *	717,167	molten steel	0.009	lb/ton	99.00%	0.0323	0.0074	Same as LMF Material Handling
Total Fugitives (Roof Monitor - 70% Building Containment Efficiency where applicable)							8.3113	1.8976	

* - Emissions Unit Locations where 70% containment efficiency was not applicable.

Table 3-16
US STEEL GARY WORKS
CONSTRUCTION PERMIT APPLICATION
BLAST FURNACE NO.13 RELINE
CHANGE IN EMISSION RATES FROM PROCESS SOURCES
SO_2
All Additional Hot Metal Through No. 2 Q-BOP

Emission Unit	Emission Location	Annual Production/ Throughput Change	Units (tons)	Emission Factor	Units	Capture Efficiency	Control Efficiency	Annual Change in Emissions		Source of Emission Factor
								(tons/yr)	(lbs/hr)	
No. 13 Blast Furnace	Casthouse Fugitives	609,592	hot metal	0.276	lb/ton	99.80%	N/A	0.1682	0.0384	June 11, 2002 letter and SO2 SIP
	Casthouse Emission Control Baghouse	609,592	hot metal	0.276	lb/ton	99.80%	0.00%	83.9554	19.1679	SIP Limit and Future Production Rate
	Slag Pit Operations	609,592	hot metal	0.0400	lb/ton	0.00%	0.00	12.1918	2.7835	EWB Engineering Calculation
PCI	Coal Pulverizer Bldg.	91,439	coal	0.00	lb/ton	N/A	N/A	0.0000	0.0000	Not Applicable
No. 1 BOP Shop	Fugitives (Roof Monitor)					N/A	N/A	0.0000	0.0000	See SO2 Fugitive Emission Calculation Table
	Gas Cleaning System (2 units)	0	molten steel	0.00	lb/ton	0.00%	0.00%	0.0000	0.0000	Not Applicable
	Hot Metal Desulfurization Baghouse	0	hot metal	0.05	lb/ton	98.50%	0.00%	0.0000	0.0000	June 11, 2002 letter and SO2 SIP
	Continuous Casting	0	molten steel	0.00	lb/ton	0.00%	0.00%	0.0000	0.0000	Not Applicable
	CAS Bell/OB Lancing Baghouse	0	molten steel	0.0000	lb/ton	94.99%	0.00%	0.0000	0.0000	Not Applicable
	Flux Handling Baghouse	0	molten steel	0.0000	lb/ton	99.00%	0.00%	0.0000	0.0000	Not Applicable
No. 1 BOP Caster	Fugitives (Roof Monitor)	0	molten steel	0.0000	lb/ton	0.00%	N/A	0.0000	0.0000	Not Applicable

Table 3-16
US STEEL GARY WORKS
CONSTRUCTION PERMIT APPLICATION
BLAST FURNACE NO.13 RELINE
CHANGE IN EMISSION RATES FROM PROCESS SOURCES
SO_2
All Additional Hot Metal Through No. 2 Q-BOP

Emission Unit	Emission Location	Annual Production/ Throughput Change	Units (tons)	Emission Factor	Units	Capture Efficiency	Control Efficiency	Annual Change in Emissions		Source of Emission Factor
								(tons/yr)	(lbs/hr)	
No. 2 Q-BOP Shop LMF	Fugitives (Roof Monitor)					N/A	N/A	0.0914	0.0209	See SO2 Fugitive Emission Calculation Table
	Gas Cleaning System (2 units)	717,167	molten steel	0.0000	lb/ton	0.00%	0.00%	0.0000	0.0000	Not Applicable
	Hot Metal Desulfurization Baghouse	609,592	hot metal	0.0500	lb/ton	99.40%	0.00%	15.1484	3.4585	June 11, 2002 letter and SO2 SIP
	Continuous Casting	717,167	molten steel	0.0000	lb/ton	95.00%	0.00%	0.0000	0.0000	Not Applicable
	Secondary Emissions Baghouse	717,167	molten steel	0.0000	lb/ton	0.00%	0.00%	0.0000	0.0000	Not Applicable
	116' Elevation North and South Flux Handling System Baghouses	717,167	molten steel	0.0000	lb/ton	99.00%	0.00%	0.0000	0.0000	Not Applicable
	North Roof Baghouse (166')	717,167	molten steel	0.0000	lb/ton	99.00%	0.00%	0.0000	0.0000	Not Applicable
	South Roof Baghouse (166')	717,167	molten steel	0.0000	lb/ton	99.00%	0.00%	0.0000	0.0000	Not Applicable
	Middle Roof Baghouse (166')	717,167	molten steel	0.0000	lb/ton	99.00%	0.00%	0.0000	0.0000	Not Applicable
	Day Tank Lime Silo Baghouse	717,167	molten steel	0.0000	lb/ton	99.00%	0.00%	0.0000	0.0000	Not Applicable
	Lime Dump Station Baghouse	717,167	molten steel	0.0000	lb/ton	99.00%	0.00%	0.0000	0.0000	Not Applicable
	No. 1 Hot Fume Exhaust Baghouse	239,056	molten steel	0.00	lb/ton	94.99%	0.00%	0.0000	0.0000	Not Applicable
	No. 2 Hot Fume Exhaust Baghouse	239,056	molten steel	0.00	lb/ton	94.99%	0.00%	0.0000	0.0000	Not Applicable
	LMF 1 & 2 Material Handling System	478,111	molten steel	0.00	lb/ton	95.00%	0.00%	0.0000	0.0000	Not Applicable
	No. 3 LMF Hot Fume Extracation Exhaust	239,056	molten steel	0.00	lb/ton	97.99%	0.00%	0.0000	0.0000	Not Applicable
	RH Vacuum Degasser Slag Conditioning Baghouse	133,185	molten steel	0.00	lb/ton	100.00%	0.00%	0.0000	0.0000	Not Applicable
	No. 3 LMF Material Handling System	239,056	molten steel	0.00	lb/ton	97.99%	0.00%	0.0000	0.0000	Not Applicable
No. 2 Q-BOP Caster	Fugitives (Roof Monitor)	717,167	molten steel	0.0000	lb/ton	95.00%	N/A	0.0000	0.0000	Not Applicable

Table 3-16a

US STEEL GARY WORKS
CONSTRUCTION PERMIT APPLICATION
BLAST FURNACE NO.13 RELINE
FUGITIVE EMISSION CALCULATION

SO_2

All Additional Hot Metal Through No. 2 Q-BOP

Emission Unit	Emission Location	Annual Production/ Throughput Change	Units (tons)	Emission Factor	Units	Capture Efficiency	Annual Change in Emissions		Source of Emission Factor
							(tons/yr)	(lbs/hr)	
No. 1 BOP Shop	Gas Cleaning System (2 units)	0	molten steel	0.00	lb/ton	99.72%	0.0000	0.0000	Not Applicable
	Hot Metal Desulfurization Baghouse	0	hot metal	0.05	lb/ton	98.50%	0.0000	0.0000	Hot Metal Desulf Factor
	CAS Bell Baghouse	0	molten steel	0.0000	lb/ton	94.99%	0.0000	0.0000	Not Applicable
	Flux Handling Baghouse	0	molten steel	0.0000	lb/ton	99.00%	0.0000	0.0000	Not Applicable
						Total Fugitives	0.000	0.000	
No. 2 Q-BOP Shop & LMF	Gas Cleaning System (2 units)	717,167	molten steel	0.0000	lb/ton	99.72%	0.0000	0.0000	Not Applicable
	Hot Metal Desulfurization Baghouse	609,592	hot metal	0.0500	lb/ton	99.40%	0.0914	0.0209	Hot Metal Desulf Factor
	No. 1 Hot Fume Exhaust Baghouse	239,056	molten steel	0.00	lb/ton	94.99%	0.0000	0.0000	Not Applicable
	No. 2 Hot Fume Exhaust Baghouse	239,056	molten steel	0.00	lb/ton	94.99%	0.0000	0.0000	Not Applicable
	LMF 1 & 2 Material Handling System	478,111	molten steel	0.00	lb/ton	95.00%	0.0000	0.0000	Not Applicable
	No. 3 LMF Hot Fume Extracation Exhaust	239,056	molten steel	0.00	lb/ton	97.99%	0.0000	0.0000	Not Applicable
	RH Vacuum Degasser Slag Conditioning Baghouse	133,185	molten steel	0.00	lb/ton	100.00%	0.0000	0.0000	Not Applicable
	LMF 3 Material Handling System	239,056	molten steel	0.00	lb/ton	97.99%	0.0000	0.0000	Not Applicable
						Total Fugitives	0.0914	0.0209	Not Applicable

Table 3-17

US STEEL GARY WORKS
CONSTRUCTION PERMIT APPLICATION
BLAST FURNACE NO.13 RELINE
CHANGE IN EMISSION RATES FROM PROCESS SOURCES

NO_X

All Additional Hot Metal Through No. 2 Q-BOP

Emission Unit	Emission Location	Annual Production/ Throughput Change	Units (tons)	Emission Factor	Units	Capture Efficiency	Control Efficiency	Annual Change in Emissions		Source of Emission Factor
								(tons/yr)	(lbs/hr)	
No. 13 Blast Furnace	Casthouse Fugitives	609,592	hot metal	0.0248	lb/ton	99.80%	N/A	0.0151	0.0035	ISPAT Inland Stack Test
	Casthouse Emission Control Baghouse	609,592	hot metal	0.0248	lb/ton	99.80%	0.00%	7.5438	1.7223	ISPAT Inland Stack Test
	Slag Pit Operations	152,398	slag	0.0137	lb/ton	0.00%	0.00%	1.0439	0.2383	ISPAT Inland Permit Application
PCI	Coal Pulverizer Bldg.	91,439	coal	0.000	lb/ton	N/A	N/A	0.0000	0.0000	Not Applicable
No. 1 BOP Shop	Fugitives (Roof Monitor)					N/A	N/A	0.0000	0.0000	See NOx Fugitive Emission Calculation Table
	Gas Cleaning System (2 units)	0	molten steel	0.0800	lb/ton	99.72%	0.00%	0.0000	0.0000	AIRS
	Hot Metal Desulfurization Baghouse	0	hot metal	0.0024	lb/ton	98.50%	0.00%	0.0000	0.0000	ISPAT Inland Stack Test
	Continuous Casting	0	molten steel	0.00	lb/ton	0.00%	0.00%	0.0000	0.0000	Not Applicable
	CAS Bell/OB Lancing Baghouse	0	molten steel	0.0000	lb/ton	94.99%	0.00%	0.0000	0.0000	Not Applicable
	Flux Handling Baghouse	0	molten steel	0.0000	lb/ton	99.00%	0.00%	0.0000	0.0000	No combustion
No. 1 BOP Caster	Fugitives (Roof Monitor)	0	molten steel	0.0000	lb/ton	0.00%	N/A	0.0000	0.0000	Not Applicable

Table 3-17
US STEEL GARY WORKS
CONSTRUCTION PERMIT APPLICATION
BLAST FURNACE NO.13 RELINE
CHANGE IN EMISSION RATES FROM PROCESS SOURCES

NO_X

All Additional Hot Metal Through No. 2 Q-BOP

Emission Unit	Emission Location	Annual Production/ Throughput Change	Units (tons)	Emission Factor	Units	Capture Efficiency	Control Efficiency	Annual Change in Emissions		Source of Emission Factor
								(tons/yr)	(lbs/hr)	
No. 2 Q-BOP Shop LMF	Fugitives (Roof Monitor)					N/A	N/A	0.1278	0.0292	See NOx Fugitive Emission Calculation Table
	Gas Cleaning System (2 units)	717,167	molten steel	0.08	lb/ton	99.72%	0:00%	28.6064	6.5311	AIRS
	Hot Metal Desulfurization Baghouse	609,592	hot metal	0.0024	lb/ton	99.40%	0.00%	0.7271	0.1660	ISPAT Inland Stack Test
	Continuous Casting	717,167	molten steel	0.00	lb/ton	95.00%	0.00%	0.0000	0.0000	Not Applicable
	Secondary Emissions Baghouse	717,167	molten steel	0.0000	lb/ton	99.72%	0.00%	0.0000	0.0000	Not Applicable
	116' Elevation North and South Flux Handling System Baghouses	717,167	molten steel	0.00	lb/ton	99.00%	0.00%	0.0000	0.0000	Not Applicable
	North Roof Baghouse (166'l	717,167	molten steel	0.00	lb/ton	99.00%	0.00%	0.0000	0.0000	Not Applicable
	South Roof Baghouse (166')	717,167	molten steel	0.00	lb/ton	99.00%	0.00%	0.0000	0.0000	Not Applicable
	Middle Roof Baghouse (166')	717,167	molten steel	0.00	lb/ton	99.00%	0.00%	0.0000	0.0000	Not Applicable
	Day Tank Lime Silo Baghouse	717,167	molten steel	0.00	lb/ton	99.00%	0.00%	0.0000	0.0000	Not Applicable
	Lime Dump Station Baghouse	717,167	molten steel	0.00	lb/ton	99.00%	0.00%	0.0000	0.0000	Not Applicable
	No. 1 Hot Fume Exhaust Baghouse	239,056	molten steel	0.003	lb/ton	94.99%	0.00%	0.3406	0.0778	Inland Steel EAF Shop modifications construction permit application submitted March 1994
	No. 2 Hot Fume Exhaust Baghouse	239,056	molten steel	0.003	lb/ton	94.99%	0.00%	0.3406	0.0778	Inland Steel EAF Shop modifications construction permit application submitted
	LMF 1 & 2 Material Handling System	478,111	molten steel	0.00	lb/ton	95.00%	0.00%	0.0000	0.0000	Not Applicable
	No. 3 LMF Hot Fume Extracation Exhaust	239,056	molten steel	0.003	lb/ton	97.99%	0.00%	0.3514	0.0802	Inland Steel EAF Shop modifications construction permit application submitted March 1994
	RH Vacuum Degasser Slag Conditioning Baghouse	133,185	molten steel	0.00015	lb/ton	100.00%	0.00%	0.0100	0.0023	Permit Application for PH Vacuum Degasse (October 1988)
	No. 3 LMF Material Handling System	239,056	molten steel	0.00000	lb/ton	97.99%	0.00%	0.0000	0.0000	Not Applicable
No. 2 Q-BOP Caster	Fugitives (Roof Monitor)	717,167	molten steel	0.0000	lb/ton	95.00%	N/A	0.0000	0.0000	Source registration notification submitted April 1995

Table 3-17a
US STEEL GARY WORKS
CONSTRUCTION PERMIT APPLICATION
BLAST FURNACE NO.13 RELINE
FUGITIVE EMISSION CALCULATION

NO_X

All Additional Hot Metal Through No. 2 Q-BOP

Emission Unit	Emission Location	Annual Production/ Throughput Change	Units (tons)	Emission Factor	Units	Capture Efficiency	Annual Change in Emissions		Source of Emission Factor
							(tons/yr)	(lbs/hr)	
No. 1 BOP Shop	Gas Cleaning System (2 units)	0	molten steel	0.08	lb/ton	99.72%	0.0000	0.0000	Gas Cleaning System Factor
	Hot Metal Desulfurization Baghouse	0	hot metal	0.0024	lb/ton	98.50%	0.0000	0.0000	Hot Metal Desulf Factor
	CAS Bell Baghouse	0	molten steel	0.0000	lb/ton	94.99%	0.0000	0.0000	Not Applicable
	Flux Handling Baghouse	0	molten steel	0.0000	lb/ton	99.00%	0.0000	0.0000	Not Applicable
						Total Fugitives	0.000	0.000	
No. 2 Q-BOP Shop & LMF	Gas Cleaning System (2 units)	717,167	molten steel	0.08	lb/ton	99.72%	0.0803	0.0183	Gas Cleaning System Factor
	Hot Metal Desulfurization Baghouse	609,592	hot metal	0.0024	lb/ton	99.40%	0.0044	0.0010	Hot Metal Desulf Factor
	No. 1 Hot Fume Exhaust Baghouse	239,056	molten steel	0.003	lb/ton	94.99%	0.0180	0.0041	No. 1 Hot Fume Exhaust Factor
	No. 2 Hot Fume Exhaust Baghouse	239,056	molten steel	0.003	lb/ton	94.99%	0.0180	0.0041	No. 2 Hot Fume Exhaust Factor
	LMF 1 & 2 Material Handling System	478,111	molten steel	0.00	lb/ton	95.00%	0.0000	0.0000	Not Applicable
	No. 3 LMF Hot Fume Extracation Exhaust	239,056	molten steel	0.003	lb/ton	97.99%	0.0072	0.0016	No.3 LMF Hot Fume Extracation Factor
	RH Vacuum Degasser Slag Conditioning Baghouse	133,185	molten steel	0.00015	lb/ton	100.00%	0.0000	0.0000	RH Vacuum Degasser Factor
	LMF 3 Material Handling System	239,056	molten steel	0.00000	lb/ton	97.99%	0.0000	0.0000	Not Applicable
						Total Fugitives	0.1278	0.0292	

Table 3-18
US STEEL GARY WORKS
CONSTRUCTION PERMIT APPLICATION
BLAST FURNACE N0.13 RELINE
CHANGE IN EMISSION RATES FROM PROCESS SOURCES

CO

All Additional Hot Metal Through No. 2 Q-BOP

Emission Unit	Emission Location	Annual Production/ Throughput Change	Units (tons)	Emission Factor	Units	Capture Efficiency	Control Efficiency	Annual Change in Emissions		Source of Emission Factor
								(tons/yr)	(lbs/hr)	
No. 13 Blast Furnace	Casthouse Fugitives	609,592	hot metal	0.000	lb/ton	99.80%	N/A	0.0000	0.0000	Not Applicable
	Casthouse Emission Control Baghouse	609,592	hot metal	0.000	lb/ton	99.80%	0.00%	0.0000	0.0000	Not Applicable
	Slag Pit Operations	152,398	slag	0.070	lb/ton	0.00%	0.00%	5.3530	1.2221	ISPAT Inland Permit Application
PCI	Coal Pulverizer Bldg.	91,439	coal	0.000	lb/ton	N/A	N/A	0.0000	0.0000	Not Applicable
No. 1 BOP Shop	Fugitives (Roof Monitor)					N/A	N/A	0.0000	0.0000	See CO Fugitive Emission Calculation Table
	Gas Cleaning System (2 units)	0	molten steel	138.00	lb/ton	99.72%	94.35%	0.0000	0.0000	AIRS, Carbon Balance and March 1996 Stack Test
	Hot Metal Desulfurization Baghouse	0	hot metal	0.00	lb/ton	98.50%	0.00%	0.0000	0.0000	Not Applicable
	Continuous Casting	0	molten steel	0.00	lb/ton	0.00%	0.00%	0.0000	0.0000	Not Applicable
	CAS Bell/OB Lancing Baghouse	0	molten steel	0.0000	lb/ton	94.99%	0.00%	0.0000	0.0000	Not Applicable
	Flux Handling Baghouse	0	molten steel	0.0000	lb/ton	99.00%	0.00%	0.0000	0.0000	Not Applicable
No. 1 BOP Caster	Fugitives (Roof Monitor)	0	molten steel	0.0000	lb/ton	0.00%	N/A	0.0000	0.0000	Not Applicable

Table 3-18
US STEEL GARY WORKS
CONSTRUCTION PERMIT APPLICATION
BLAST FURNACE NO.13 RELINE
CHANGE IN EMISSION RATES FROM PROCESS SOURCES
CO
All Additional Hot Metal Through No. 2 Q-BOP

Emission Unit	Emission Location	Annual Production/ Throughput Change	Units (tons)	Emission Factor	Units	Capture Efficiency	Control Efficiency	Annual Change in Emissions		Source of Emission Factor
								(tons/yr)	(lbs/hr)	
No. 2 Q-BOP Shop LMF	Fugitives (Roof Monitor)					N/A	N/A	139.2756	31.7981	See CO Fugitive Emission Calculation Table
	Gas Cleaning System (2 units)	717,167	molten steel	138.00	lb/ton	99.72%	94.35%	2788.0473	636.5405	AIRS, Carbon Balance and March 1996 Stack Test
	Hot Metal Desulfurization Baghouse	609,592	hot metal	0.00	lb/ton	99.40%	0.00%	0.0000	0.0000	Not Applicable
	Continuous Casting	717,167	molten steel	0.00	lb/ton	95.00%	0.00%	0.0000	0.0000	Not Applicable
	Secondary Emissions Baghouse	717,167	molten steel	0.00	lb/ton	99.72%	0.00%	0.0000	0.0000	Not Applicable
	116' Elevation North and South Flux Handling System Baghouses	717,167	molten steel	0.00	lb/ton	99.00%	0.00%	0.0000	0.0000	Not Applicable
	North Roof Baghouse (166')	717,167	molten steel	0.00	lb/ton	99.00%	0.00%	0.0000	0.0000	Not Applicable
	South Roof Baghouse (166')	717,167	molten steel	0.00	lb/ton	99.00%	0.00%	0.0000	0.0000	Not Applicable
	Middle Roof Baghouse (166')	717,167	molten steel	0.00	lb/ton	99.00%	0.00%	0.0000	0.0000	Not Applicable
	Day Tank Lime Silo Baghouse	717,167	molten steel	0.00	lb/ton	99.00%	0.00%	0.0000	0.0000	Not Applicable
	Lime Dump Station Baghouse	717,167	molten steel	0.00	lb/ton	99.00%	0.00%	0.0000	0.0000	Not Applicable
	No. 1 Hot Fume Exhaust Baghouse	239,056	molten steel	0.05	lb/ton	94.99%	0.00%	5.6770	1.2961	Inland Steel EAF Shop modifications construction permit application submitted March 1994
	No. 2 Hot Fume Exhaust Baghouse	239,056	molten steel	0.05	lb/ton	94.99%	0.00%	5.6770	1.2961	Inland Steel EAF Shop modifications construction permit application submitted March 1994
	LMF 1 & 2 Material Handling System	478,111	molten steel	0.00	lb/ton	95.00%	0.00%	0.0000	0.0000	Not Applicable
	No. 3 LMF Hot Fume Extracation Exhaust	239,056	molten steel	0.05	lb/ton	97.99%	0.00%	5.8563	1.3370	Inland Steel EAF Shop modifications construction permit application submitted March 1994
	RH Vacuum Degasser Slag Conditioning Baghouse	133,185	molten steel	0.887	lb/ton	100.00%	0.00%	59.0676	13.4857	Weight percent of carbon in steel before and after degassing process. Assume all carbon removed during the degassing process is converted to CO.
	No. 3 LMF Material Handling System	239,056	molten steel	0.000	lb/ton	97.99%	0.00%	0.0000	0.0000	Not Applicable
No. 2 Q-BOP Caster	Fugitives (Roof Monitor)	717,167	molten steel	0.0000	lb/ton	95.00%	N/A	0.0000	0.0000	Source registration notification submitted April 1995

Table 3-18a
US STEEL GARY WORKS
CONSTRUCTION PERMIT APPLICATION
BLAST FURNACE NO.13 RELINE
FUGITIVE EMISSION CALCULATION

CO

All Additional Hot Metal Through No. 2 Q-BOP

Emission Unit	Emission Location	Annual Production/ Throughput Change	Units (tons)	Emission Factor	Units	Capture Efficiency	Annual Change in Emissions		Source of Emission Factor
							(tons/yr)	(lbs/hr)	
No. 1 BOP Shop	Gas Cleaning System (2 units)	0	molten steel	138.00	lb/ton	99.72%	0.0000	0.0000	Gas Cleaning System Factor
	Hot Metal Desulfurization Baghouse	0	hot metal	0.00	lb/ton	98.50%	0.0000	0.0000	Not Applicable
	CAS Bell Baghouse	0	molten steel	0.0000	lb/ton	94.99%	0.0000	0.0000	Not Applicable
	Flux Handling Baghouse	0	molten steel	0.0000	lb/ton	99.00%	0.0000	0.0000	Not Applicable
						Total Fugitives	0.000	0.000	
No. 2 Q-BOP Shop & LMF	Gas Cleaning System (2 units)	717,167	molten steel	138.00	lb/ton	99.72%	138.5567	31.6339	Gas Cleaning System Factor
	Hot Metal Desulfurization Baghouse	609,592	hot metal	0.00	lb/ton	99.40%	0.0000	0.0000	Not Applicable
	No. 1 Hot Fume Exhaust Baghouse	239,056	molten steel	0.05	lb/ton	94.99%	0.2994	0.0684	No.1 Hot Furme Exhaust Factor
	No. 2 Hot Fume Exhaust Baghouse	239,056	molten steel	0.05	lb/ton	94.99%	0.2994	0.0684	No.2 Hot Fumre Exhaust Factor
	LMF 1 & 2 Material Handling System	478,111	molten steel	0.00	lb/ton	95.00%	0.0000	0.0000	Not Applicable
	No. 3 LMF Hot Fume Extracation Exhaust	239,056	molten steel	0.05	lb/ton	97.99%	0.1201	0.0274	No.3 LMF Hot Fume Extracation Factor
	RH Vacuum Degasser Slag Conditioning Baghouse	133,185	molten steel	0.887	lb/ton	100.00%	0.00E+00	0.00E+00	RH Vacuum Degasser Factor
	LMF 3 Material Handling System	239,056	molten steel	0.000	lb/ton	97.99%	0.0000	0.0000	Not Applicable
						Total Fugitives	139.2756	31.7981	

Table 3-19
US STEEL GARY WORKS
CONSTRUCTION PERMIT APPLICATION
BLAST FURNACE NO.13 RELINE
CHANGE IN EMISSION RATES FROM PROCESS SOURCES

VOC

All Additional Hot Metal Through No. 2 Q-BOP

Emission Unit	Emission Location	Annual Production/ Throughput Change	Units (tons)	Emission Factor	Units	Capture Efficiency	Control Efficiency	Annual Change in Emissions		Source of Emission Factor
								(tons/yr)	(lbs/hr)	
No. 13 Blast Furnace	Casthouse Fugitives	609,592	hot metal	0.0000	lb/ton	99.80%	0.00%	0.0000	0.0000	Not Applicable
	Casthouse Emission Control Baghouse	609,592	hot metal	0.00000	lb/ton	99.80%	0.00%	0.0000	0.0000	Not Applicable
	Slag Pit Operations	152,398	slag	0.00134	lb/ton	0.00%	0.00%	0.1017	0.0232	ISPAT Inland Permit Application
PCI	Coal Pulverizer Bldg.	91,439	coal	0.000	lb/ton	N/A	N/A	0.0000	0.0000	Not Applicable
No. 1 BOP Shop	Fugitives (Roof Monitor)					N/A	N/A	0.0000	0.0000	See VOC Fugitive Emission Calculation Table
	Gas Cleaning System (2 units)	0	molten steel	0.002	lb/ton	99.72%	0.00%	0.0000	0.0000	AIRS
	Hot Metal Desulfurization Baghouse	0	hot metal	0.001	lb/ton	98.50%	0.00%	0.0000	0.0000	AIRS
	Continuous Casting	0	molten steel	0.000	lb/ton	0.00%	0.00%	0.0000	0.0000	Not Applicable
	CAS Bell/OB Lancing Baghouse	0	molten steel	0.00000	lb/ton	94.99%	0.00%	0.0000	0.0000	Source registration notification submitted April 1995
	Flux Handling Baghouse	0	molten steel	0.00000	lb/ton	99.00%	0.00%	0.0000	0.0000	Not Applicable
No. 1 BOP Caster	Fugitives (Roof Monitor)	0	molten steel	0.00000	lb/ton	0.00%	N/A	0.0000	0.0000	Not Applicable

Table 3-19
US STEEL GARY WORKS
CONSTRUCTION PERMIT APPLICATION
BLAST FURNACE NO.13 RELINE
CHANGE IN EMISSION RATES FROM PROCESS SOURCES
VOC
All Additional Hot Metal Through No. 2 Q-BOP

Emission Unit	Emission Location	Annual Production/ Throughput Change	Units (tons)	Emission Factor	Units	Capture Efficiency	Control Efficiency	Annual Change in Emissions		Source of Emission Factor
								(tons/yr)	(lbs/hr)	
No. 2 Q-BOP Shop LMF	Fugitives (Roof Monitor)					N/A	N/A	0.0038	0.0009	See VOC Fugitive Emission Calculation Table
	Gas Cleaning System (2 units)	717,167	molten steel	0.002	lb/ton	99.72%	0.00%	0.7152	0.1633	AIRS
	Hot Metal Desulfurization Baghouse	609,592	hot metal	0.001	lb/ton	99.40%	0.00%	0.3030	0.0692	AIRS
	Continuous Casting	717,167	molten steel	0.000	lb/ton	95.00%	0.00%	0.0000	0.0000	Not Applicable
	Secondary Emissions Baghouse	717,167	molten steel	0.000	lb/ton	99.72%	0.00%	0.0000	0.0000	Not Applicable
	116' Elevation North and South Flux Handling System Baghouses	717,167	molten steel	0.000	lb/ton	99.00%	0.00%	0.0000	0.0000	Not Applicable
	North Roof Baghouse (166')	717,167	molten steel	0.00	lb/ton	99.00%	0.00%	0.0000	0.0000	Not Applicable
	South Roof Baghouse (166')	717,167	molten steel	0.00	lb/ton	99.00%	0.00%	0.0000	0.0000	Not Applicable
	Middle Roof Baghouse (166')	717,167	molten steel	0.00	lb/ton	99.00%	0.00%	0.0000	0.0000	Not Applicable
	Day Tank Lime Silo Baghouse	717,167	molten steel	0.00	lb/ton	99.00%	0.00%	0.0000	0.0000	Not Applicable
	Lime Dump Station Baghouse	717,167	molten steel	0.00	lb/ton	99.00%	0.00%	0.0000	0.0000	Not Applicable
	No. 1 Hot Fume Exhaust Baghouse	239,056	molten steel	0.000	lb/ton	94.99%	0.00%	0.0000	0.0000	Not Applicable
	No. 2 Hot Fume Exhaust Baghouse	239,056	molten steel	0.000	lb/ton	94.99%	0.00%	0.0000	0.0000	Not Applicable
	LMF 1 & 2 Material Handling System	478,111	molten steel	0.000	lb/ton	95.00%	0.00%	0.0000	0.0000	Not Applicable
	No. 3 LMF Hot Fume Extracation Exhaust	239,056	molten steel	0.000	lb/ton	97.99%	0.00%	0.0000	0.0000	Not Applicable
	RH Vacuum Degasser Slag Conditioning Baghouse	133,185	molten steel	0.000	lb/ton	100.00%	0.00%	0.0000	0.0000	Not Applicable
	No. 3 LMF Material Handling System	239,056	molten steel	0.000	lb/ton	97.99%	0.00%	0.0000	0.0000	Not Applicable
No. 2 Q-BOP Caster	Fugitives (Roof Monitor)	717,167	molten steel	0.00000	lb/ton	95.00%	N/A	0.0000	0.0000	Not Applicable

* - See Table 5, Attachment 1

Table 3-19a
US STEEL GARY WORKS
CONSTRUCTION PERMIT APPLICATION
BLAST FURNACE NO.13 RELINE
FUGITIVE EMISSION CALCULATION

VOC

All Additional Hot Metal Through No. 2 Q-BOP

Emission Unit	Emission Location	Annual Production/ Throughput Change	Units (tons)	Emission Factor	Units	Capture Efficiency	Annual Change in Emissions		Source of Emission Factor
							(tons/yr)	(lbs/hr)	
No. 1 BOP Shop	Gas Cleaning System (2 units)	0	molten steel	0.002	lb/ton	99.72%	0.0000	0.0000	Gas Cleaning System Factor
	Hot Metal Desulfurization Baghouse	0	hot metal	0.001	lb/ton	98.50%	0.0000	0.0000	Hot Metal Desulf Factor
	CAS Bell Baghouse	0	molten steel	0.00000	lb/ton	94.99%	0.0000	0.0000	Not Applicable
	Flux Handling Baghouse	0	molten steel	0.00000	lb/ton	99.00%	0.0000	0.0000	Not Applicable
						Total Fugitives	0.000	0.000	
No. 2 Q-BOP Shop & LMF	Gas Cleaning System (2 units)	717,167	molten steel	0.002	lb/ton	99.72%	0.0020	0.0005	Gas Cleaning System Factor
	Hot Metal Desulfurization Baghouse	609,592	hot metal	0.001	lb/ton	99.40%	0.0018	0.0004	Hot Metal Desulf Factor
	No. 1 Hot Fume Exhaust Baghouse	239,056	molten steel	0.000	lb/ton	94.99%	0.0000	0.0000	Not Applicable
	No. 2 Hot Fume Exhaust Baghouse	239,056	molten steel	0.000	lb/ton	94.99%	0.0000	0.0000	Not Applicable
	LMF 1 & 2 Material Handling System	478,111	molten steel	0.000	lb/ton	95.00%	0.0000	0.0000	Not Applicable
	No. 3 LMF Hot Fume Extracation Exhaust	239,056	molten steel	0.000	lb/ton	97.99%	0.0000	0.0000	Not Applicable
	RH Vacuum Degasser Slag Conditioning Baghouse	133,185	molten steel	0.000	lb/ton	100.00%	0.0000	0.0000	Not Applicable
	LMF 3 Material Handling System	239,056	molten steel	0.000	lb/ton	97.99%	0.0000	0.0000	Not Applicable
						Total Fugitives	0.0038	0.0009	Not Applicable

Table 3-20
US STEEL GARY WORKS
CONSTRUCTION PERMIT APPLICATION
BLAST FURNACE NO.13 RELINE
CHANGE IN EMISSION RATES FROM COMBUSTION SOURCES

PM

All Additional Hot Metal Through No. 2 Q-BOP

Emission Unit	Emission Location	Throughput Change	Units	Emission Factor	Units	Capture Efficiency	Control Efficiency	Annual Change in Emissions		Source of Emission Factor
								(tons/yr)	(lbs/hr)	
Blast Furnace No. 13	Stoves (NG)	254	mmcf	7.60	lb/mmcf	100.00%	0.00%	0.967	0.2207	AP-42
	Stoves (BFG)	8,047	mmcf	2.90	lb/mmcf	100.00%	0.00%	11.667	2.6638	AIRS
						Total Stoves		12.634	2.885	
TBBH Boilers	TBBH Boilers (BFG)	22,433	mmcf	2.90	lb/mmcf	100.00%	0.00%	32.528	7.4265	AIRS
						Total Boiler House		32.528	7.426	

Table 3-21

US STEEL GARY WORKS
CONSTRUCTION PERMIT APPLICATION
BLAST FURNACE NO.13 RELINE
CHANGE IN EMISSION RATES FROM COMBUSTION SOURCES

PM_{10}

All Additional Hot Metal Through No. 2 Q-BOP

Emission Unit	Emission Location	Throughput Change	Units	Emission Factor	Units	Capture Efficiency	Control Efficiency	Annual Change in Emissions		Source of Emission Factor
								(tons/yr)	(lbs/hr)	
Blast Furnace No. 13	Stoves (NG)	254	mmcf	7.60	lb/mmcf	100.00%	0.00%	0.967	0.2207	AP-42
	Stoves (BFG)	8,047	mmcf	0.96	lb/mmcf	100.00%	0.00%	3.862	0.8818	Oct. 11, 2001 - Stack Test on No. 6 Boiler (100% BFG)
						Total Stoves		4.829	1.1026	
TBBH Boilers	TBBH Boilers (BFG)	22,433	mmcf	0.96	lb/mmcf	100.00%	0.00%	10.768	2.4584	Oct. 11, 2001 - Stack Test on No. 6 Boiler (100% BFG)
						Total Boiler House		10.768	2.458	

Table 3-22
US STEEL GARY WORKS
CONSTRUCTION PERMIT APPLICATION
BLAST FURNACE NO.13 RELINE
CHANGE IN EMISSION RATES FROM COMBUSTION SOURCES

SO_2

All Additional Hot Metal Through No. 2 Q-BOP

Emission Unit	Emission Location	Throughput Change	Units	Emission Factor	Units	Capture Efficiency	Control Efficiency	Annual Change in Emissions		Source of Emission Factor
								(tons/yr)	(lbs/hr)	
Blast Furnace No. 13	Stoves (NG)	254	mmcf	0.60	lb/mmcf	100.00%	0.00%	0.076	0.0174	AP-42 (1998)
	Stoves (BFG)	8,047	mmcf	6.39	lb/mmcf	100.00%	0.00%	25.709	5.8696	IDEM SO2 Quarterly Report
						Total Stoves		25.785	5.887	
TBBH Boilers	TBBH Boilers (BFG)	22,433	mmcf	6.39	lb/mmcf	100.00%	0.00%	71.674	16.3638	IDEM SO2 Quarterly Report
						Total Boiler House		71.674	16.364	

Table 3-23
US STEEL GARY WORKS
CONSTRUCTION PERMIT APPLICATION
BLAST FURNACE NO.13 RELINE
CHANGE IN EMISSION RATES FROM COMBUSTION SOURCES

NO_X

All Additional Hot Metal Through No. 2 Q-BOP

Emission Unit	Emission Location	Throughput Change	Units	Emission Factor	Units	Capture Efficiency	Control Efficiency	Annual Change in Emissions		Source of Emission Factor
								(tons/yr)	(lbs/hr)	
Blast Furnace No. 13	Stoves (NG)	254	mmcf	280.00	lb/mmcf	100.00%	0.00%	35.620	8.1325	AP-42 (1998)
	Stoves (BFG)	8,047	mmcf	0.61	lb/mmcf	100.00%	0.00%	2.454	0.5603	RATA Testing on Jan 2004
						Total Stoves		38.074	8.693	
TBBH Boilers	TBBH Boilers (BFG)	22,433	mmcf	0.61	lb/mmcf	100.00%	0.00%	6.842	1.5621	RATA Testing on Jan 2004
						Total Boiler House		6.84	1.56	

Table 3-24
US STEEL GARY WORKS
CONSTRUCTION PERMIT APPLICATION
BLAST FURNACE NO.13 RELINE
CHANGE IN EMISSION RATES FROM COMBUSTION SOURCES

CO

All Additional Hot Metal Through No. 2 Q-BOP

Emission Unit	Emission Location	Throughput Change	Units	Emission Factor	Units	Capture Efficiency	Control Efficiency	Annual Change in Emissions		Source of Emission Factor
								(tons/yr)	(lbs/hr)	
Blast Furnace No. 13	Stoves (NG)	254	mmcf	84.00	lb/mmcf	100.00%	0.00%	10.686	2.4397	AP-42 (1998)
	Stoves (BFG)	8,047	mmcf	26.50	lb/mmcf	100.00%	0.00%	106.617	24.3417	Stack tests at TBBH No. 4
						Total Stoves		117.303	26.781	
TBBH Boilers	TBBH Boilers (BFG)	22,433	mmcf	26.50	lb/mmcf	100.00%	0.00%	297.238	67.8626	Stack tests at TBBH No. 4
						Total Boiler House		297.238	67.863	

Table 3-25
US STEEL GARY WORKS
CONSTRUCTION PERMIT APPLICATION
BLAST FURNACE NO.13 RELINE
CHANGE IN EMISSION RATES FROM COMBUSTION SOURCES

VOC

Emission Unit	Emission Location	Throughput Change	Units	Emission Factor	Units	Capture Efficiency	Control Efficiency	Annual Change in Emissions		Source of Emission Factor
								(tons/yr)	(lbs/hr)	
Blast Furnace No. 13	Stoves (NG)	254	mmcf	5.50	lb/mmcf	100.00%	0.00%	0.700	0.1597	AP-42 (1998)
	Stoves (BFG)	8,047	mmcf	0.00	lb/mmcf	100.00%	0.00%	0.000	0.0000	AIRS
						Total Stoves		0.700	0.160	
TBBH Boilers	TBBH Boilers (BFG)	22,433	mmcf	0.00	lb/mmcf	100.00%	0.00%	0.000	0.0000	AIRS
						Total Boiler House		0.000	0.000	

TABLE 3-26
US STEEL GARY WORKS
CONTRUCTION PERMIT APPLICATION
NO. 13 BLAST FURNACE RELINE
CHANGE IN HAZARDOUS AIR POLLUTANTS
EMISSION RATE

Hazardous Air Pollutant	Change in Emission Rates (tons/yr)	
	Case I (1)	Case II (1)
2,4-Dinitrotoluene	4.72E-05	4.72E-05
2-Chloroacetophenone	1.10E-03	1.10E-03
Acetaldehyde	8.96E-02	8.96E-02
Acetophenone	2.36E-03	2.36E-03
Acrolein	4.57E-02	4.57E-02
Antimony	3.35E-03	3.63E-03
Arsenic	3.17E-04	6.36E-04
Benzene	2.04E-01	2.04E-01
Benzyl Chloride	1.10E-01	1.10E-01
Beryllium	1.53E-06	1.53E-06
Bromoform	6.13E-03	6.13E-03
Cadmium	4.01E-04	2.71E-03
Carbon Disulfide	2.04E-02	2.04E-02
Carbonyl Sulfide	1.49E-01	1.49E-01
Chlorobenzene	3.46E-03	3.46E-03
Chloroform	9.28E-03	9.28E-03
Chromium	8.31E-03	1.35E-02
Cobalt	6.77E-05	1.11E-04
Cumene	8.35E-04	8.35E-04
Cyanide	3.93E-01	3.93E-01
DEHP	1.15E-02	1.15E-02
Dichlorobenzene	1.53E-04	1.53E-04
Dimethyl Sulfate	7.56E-03	7.56E-03
Ethelyne Dibromide	1.86E-04	1.86E-04
Ethelyne Dichloride	6.29E-03	6.29E-03
Ethyl Chloride	6.61E-03	6.61E-03
Ethylbenzene	1.46E-02	1.48E-02
Formaldehyde	4.73E-02	4.73E-02
HCN	4.18E-02	4.18E-02
Hexane	2.40E-01	2.40E-01
Isophorone	9.13E-02	9.13E-02
Lead	2.03E-02	5.32E-02
Manganese	2.59E-01	5.62E-01
Mercury	3.33E-05	4.46E-05
Methyl Bromide	2.51E-02	2.51E-02
Methyl Chloride	8.34E-02	8.34E-02
Methyl Chloroform (1,1,1-Trichloroethane)	2.27E-03	2.27E-03
Methyl Ethyl Ketone (MEK)	6.14E-02	6.14E-02
Methyl Methacryalate	3.14E-03	3.14E-03
Methyl tert butyl ether	5.50E-03	5.50E-03
Methylene Chloride	4.57E-02	4.57E-02
Methylhydrazine	2.68E-02	2.68E-02
Naphthalene	7.21E-01	7.21E-01
Nickel	2.67E-04	8.83E-04
Phenol	2.51E-03	2.51E-03
POM	5.07E-05	5.07E-05
Propionaldehyde	5.97E-02	5.97E-02
Quinoline	2.50E-06	2.50E-06
Selenium	2.47E-04	2.38E-04
Styrene	3.93E-03	3.93E-03
Tetrachloroethylene	6.77E-03	6.77E-03
Toluene	3.82E-02	3.82E-02
Vinyl Acetate	1.19E-03	1.19E-03
Xylene	5.82E-03	5.82E-03
TOTAL (tons/yr)	2.8880	3.2327

(1) Assume all additional hot metal produced at No. 13 Blast Furnace is processed through:
Case I - No. 1 BOP Shop
Case II - No. 2 Q-BOP Shop

TABLE 4-1
U.S. STEEL – GARY WORKS
NO. 13 BLAST FURNACE RELINE PROJECT
CONSTRUCTION PERMIT APPLICATION

Estimated Increases in Emissions of Relevant Regulated Air Pollutants Compared to Significant Emissions (Major Source Modification) Thresholds

Pollutant	Estimated Emissions Increases tons/yr		Significant Emissions Thresholds tons/yr
	Case I[1]	Case II[1]	
Particulate Matter (PM)	89	91	N/A
Particulate Matter (PM_{10})	46	77	15
Sulfur Dioxide (SO_2)	209	209	40
Oxides of Nitrogen (NO_x)	83	83	40
Carbon Monoxide (CO)	3,346	3,346	100
Volatile Organic Compounds (VOC)	1.82	1.82	15.44[2]
Lead (Pb)	0.02	0.05	0.6
Hydrogen Sulfide (H_2S)	7.7	7.7	10
Fluorides (F)	2.7	2.7	3
Beryllium (Be)	<0.0001	<0.0001	0.0004
Mercury (Hg)	<0.0001	<0.0001	0.1
Individual HAP	0.72	0.72	10
Total HAPs	2.9	3.2	25

(1) Assumes all additional hot metal produced at No. 13 Blast Furnace is processed through:

Case I – No. 1 BOP Shop
Case II – No. 2 Q-BOP Shop

(2) Remainder in the USS-Gary Works VOC Diminimis Account prior to the No. 13 Blast Furnace Reline Project (total of all previous increases) in calendar years 2000 through 2004 to date. Total increases including this project is less than 25 tons VOC/yr major source modification threshold in severe ozone non-attainment area

TABLE 6-1

U.S. STEEL – GARY WORKS
NO. 13 BLAST FURNACE RELINE PROJECT
CONSTRUCTION PERMIT APPLICATION
NAAQS, ALLOWABLE PSD INCREMENTS, AND SIGNIFICANT IMPACT LEVELS

Pollutant	Averaging Period	NAAQS[1] Standard (ug/m^3)	Allowable[2] PSD Increment (ug/m^3)	Significant[4] Impact Level (ug/m^3)
Nitrogen Dioxide (NO_2)	Annual	100	25	1
Carbon Monoxide (CO)	1-hour	40,000[3]	--	2,000
	8-hour	10,000[3]	--	500
Particulate Matter (PM_{10})	24-hour	150[3]	30	5
	Annual	50	17	1
Sulfur Dioxide (SO_2)	3-hour	1,300[3]	512	25
	24-hour	365[3]	91	5
	Annual	80	20	1

[1] 40 CFR 50
[2] Class II PSD Increments, 40 CFR 52.166
[3] May be exceeded once a year
[4] 40 CFR 51.165

TABLE 6-2
U.S. STEEL-GARY WORKS
NO. 13 BLAST FURNACE RELINE PROJECT
CONSTRUCTION PERMIT APPLICATION
Modeled Parameters for Point Sources

Description	UTM Coordinates (m)		Elevation (m)	Stack Ht. (m)	Temperature (Deg K)	Exit Vel. (m/s)	Stack Dia. (m)
	X	Y					
Blast Furnace No. 13 Stoves Stack	472713	4607465	179.8	75.8	325	6.23	4.72
Blast Furnace No. 13 Casthouse Baghouse Stack	472640	4607616	182.9	50.1	339	22.49	3.96
#1 BOP Gas Cleaning System Stack	472192	4606491	179.8	46.4	336	17.21	3.35
#2 Q-BOP Gas Cleaning System Stack	472313	4607298	179.8	57.9	322	12.01	3.66
#2 Q-BOP LMF #1 Hot Fume Exhaust Baghouse Stack	472444	4607590	182.9	13.2	339	5.15	0.91
#2 Q-BOP LMF #2 Hot Fume Exhaust Baghouse Stack	472304	4607416	182.9	13.2	339	5.15	0.91
#2 Q-BOP LMF #3 Hot Fume Exhaust/Material Handling Baghouse Stack	472275	4607372	179.8	12.1	339	3.72	3.26
#2 Q-BOP RH-Degasser Slag Conditioning Baghouse Stack	472440	4607593	182.9	13.2	325	5.16	0.91
Turboblower Boiler House Boiler Nos. 1,2,3 and 5	472662	4606904	179.8	45.7	445	8.12	3.81
Turboblower Boiler House Boiler No. 6	472652	4606850	179.8	45.7	445	15.78	3.05

TABLE 6-3
U.S. STEEL-GARY WORKS
NO. 13 BLAST FURNACE RELINE PROJECT
CONSTRUCTION PERMIT APPLICATION
Modeled Parameters for Volume Sources

Description	UTM Coordinates (m)		Elevation (m)	Release Ht. (m)	Init. Lat. Dim. (m)	Init. Vert. Dim. (m)
	X	Y				
Blast Furnace No. 13 Slag Pit	472664	4607542	181.5	9.14	2.22	4.25
Blast Furnace No. 13 Casthouse Fugitives (1)	472711	4607478	179.8	34.40	6.40	16.00
Blast Furnace No. 13 Casthouse Fugitives (2)	472713	4607461	179.8	34.40	6.40	16.00
#1 BOP Fugitives (1)	472292	4606519	179.8	52.30	31.90	24.70
#1 BOP Fugitives (2)	472248	4606461	179.8	52.30	31.90	24.70
#1 BOP Hot Metal Desulfurization Baghouse (1)	472280	4606492	181.5	14.20	10.50	6.60
#1 BOP Hot Metal Desulfurization Baghouse (2)	472290	4606492	181.5	14.20	10.50	6.60
#1 BOP Hot Metal Desulfurization Fugitives	472459	4606732	179.8	19.10	5.81	8.88
#2 Q-BOP Fugitives	472410	4607395	179.8	52.90	41.70	26.00
#2 Q-BOP Hot Metal Desulfurization Baghouse	472522	4607455	181.5	16.80	4.30	7.80
#2 Q-BOP Hot Metal Desulfurization Fugitives	472488	4607414	179.8	21.94	7.09	10.20
No. 2 Caster A Line (1)	472295	4607563	182.5	20.80	6.00	9.70
No. 2 Caster A Line (2)	472301	4607560	182.5	20.80	6.00	9.70
No. 2 Caster A Line (3)	472307	4607556	182.5	20.80	6.00	9.70
No. 2 Caster A Line (4)	472313	4607553	182.5	20.80	6.00	9.70
No. 2 Caster A Line (5)	472319	4607549	182.5	20.80	6.00	9.70
No. 2 Caster A Line (6)	472325	4607545	182.5	20.80	6.00	9.70
No. 2 Caster B Line (1)	472267	4607562	182.5	20.80	6.20	9.70
No. 2 Caster B Line (2)	472274	4607557	182.5	20.80	6.20	9.70
No. 2 Caster B Line (4)	472285	4607547	182.5	20.80	6.20	9.70
No. 2 Caster B Line (7)	472303	4607532	182.5	20.80	6.20	9.70
No. 2 Caster B Line (8)	472309	4607527	182.5	20.80	6.20	9.70
No. 2 Caster B Line(3)	472279	4607552	182.5	20.80	6.20	9.70
No. 2 Caster B Line(5)	472291	4607542	182.5	20.80	6.20	9.70
No. 2 Caster B Line(6)	472297	4607537	182.5	20.80	6.20	9.70
No. 2 Caster C Line (1)	472251	4607540	182.5	20.80	6.20	9.70
No. 2 Caster C Line (2)	472256	4607535	182.5	20.80	6.20	9.70

TABLE 6-3
U.S. STEEL-GARY WORKS
NO. 13 BLAST FURNACE RELINE PROJECT
CONSTRUCTION PERMIT APPLICATION
Modeled Parameters for Volume Sources

Description	UTM Coordinates (m)		Elevation (m)	Release Ht. (m)	Init. Lat. Dim. (m)	Init. Vert. Dim. (m)
	X	Y				
No. 2 Caster C Line (3)	472262	4607530	182.5	20.80	6.20	9.70
No. 2 Caster C Line (4)	472268	4607525	182.5	20.80	6.20	9.70
No. 2 Caster C Line (5)	472274	4607520	182.5	20.80	6.20	9.70
No. 2 Caster C Line (6)	472280	4607515	182.5	20.80	6.20	9.70
No. 2 Caster C Line (7)	472286	4607510	182.5	20.80	6.20	9.70
No. 2 Caster C Line (8)	472292	4607505	182.5	20.80	6.20	9.70

TABLE 6-4A
U.S. STEEL-GARY WORKS
NO. 13 BLAST FURNACE RELINE PROJECT
CONSTRUCTION PERMIT APPLICATION
Modeled PM_{10} Emission Rate Increases for Level 2 Modeling

Description	Modeled PM_{10} Emission Rate (lb/hr)	
	10,000 Tons of Hot Metal Per Day Processed Through No. 1 BOP Shop (lb/hr)	10,000 Tons of Hot Metal Per Day Processed Through No. 2 Q-BOP Shop (lb/hr)
Point Sources		
Blast Furnace No. 13 Stoves Stack	1.1025	1.1025
Volume Sources		
Blast Furnace No. 13 Slag Pit	0.7394	0.7394
Blast Furnace No. 13 Casthouse Fugitives (1)	0.0064	0.0064
Blast Furnace No. 13 Casthouse Fugitives (2)	0.0064	0.0064
#1 BOP Fugitives (1)	1.0656	NA
#1 BOP Fugitives (2)	1.0656	NA
#2 Q-BOP Fugitives	NA	1.8975
No. 2 Caster A Line (1)	NA	0.00023
No. 2 Caster A Line (2)	NA	0.00023
No. 2 Caster A Line (3)	NA	0.00023
No. 2 Caster A Line (4)	NA	0.00023
No. 2 Caster A Line (5)	NA	0.00023
No. 2 Caster A Line (6)	NA	0.00023
No. 2 Caster B Line (1)	NA	0.00023
No. 2 Caster B Line (2)	NA	0.00023
No. 2 Caster B Line (4)	NA	0.00023
No. 2 Caster B Line (7)	NA	0.00023
No. 2 Caster B Line (8)	NA	0.00023
No. 2 Caster B Line(3)	NA	0.00023
No. 2 Caster B Line(5)	NA	0.00023
No. 2 Caster B Line(6)	NA	0.00023
No. 2 Caster C Line (1)	NA	0.00023
No. 2 Caster C Line (2)	NA	0.00023
No. 2 Caster C Line (3)	NA	0.00023
No. 2 Caster C Line (4)	NA	0.00023
No. 2 Caster C Line (5)	NA	0.00023
No. 2 Caster C Line (6)	NA	0.00023
No. 2 Caster C Line (7)	NA	0.00023
No. 2 Caster C Line (8)	NA	0.00023

TABLE 6-4B
U.S. STEEL-GARY WORKS
NO. 13 BLAST FURNACE RELINE PROJECT
CONSTRUCTION PERMIT APPLICATION
Modeled Oxides of Nitrogen Emission Rates for Level 2 Modeling

Description	Modeled NOx Emission Rate (lb/hr)	
	10,000 Tons of Hot Metal Per Day Processed Through No. 1 BOP Shop (lb/hr)	10,000 Tons of Hot Metal Per Day Processed Through No. 2 Q-BOP Shop (lb/hr)
Point Sources		
Blast Furnace No. 13 Stoves Stack	8.6928	8.6928
Blast Furnace No. 13 Casthouse Baghouse Stack	1.7223	1.7223
#1 BOP Gas Cleaning System Stack	6.5311	NA
#2 Q-BOP Gas Cleaning System Stack	NA	6.5311
#2 Q-BOP LMF #1 Hot Fume Exhaust Baghouse Stack	NA	0.0778
#2 Q-BOP LMF #2 Hot Fume Exhaust Baghouse Stack	NA	0.0778
#2 Q-BOP LMF #3 Hot Fume Exhaust/Material Handling Baghouse Stack	NA	0.0802
#2 Q-BOP RH-Degasser Slag Conditioning Baghouse Stack	NA	0.0023
Turboblower Boiler House Boiler Nos. 1,2,3 and 5	1.0901	1.0901
Turboblower Boiler House Boiler No. 6	0.4720	0.4720
Volume Sources		
Blast Furnace No. 13 Slag Pit	0.2383	0.2383
Blast Furnace No. 13 Casthouse Fugitives (1)	0.0018	0.0018
Blast Furnace No. 13 Casthouse Fugitives (2)	0.0018	0.0018
#1 BOP Fugitives (1)	0.0092	NA
#1 BOP Fugitives (2)	0.0092	NA
#1 BOP Hot Metal Desulfurization Baghouse (1)	0.0823	NA
#1 BOP Hot Metal Desulfurization Baghouse (2)	0.0823	NA
#1 BOP Hot Metal Desulfurization Fugitives	0.0025	NA
#2 Q-BOP Fugitives	NA	0.0281
#2 Q-BOP Hot Metal Desulfurization Baghouse	NA	0.1660
#2 Q-BOP Hot Metal Desulfurization Fugitives	NA	0.0010

TABLE 6-4C
U.S. STEEL-GARY WORKS
NO. 13 BLAST FURNACE RELINE PROJECT
CONSTRUCTION PERMIT APPLICATION
Modeled Carbon Monoxide Emission Rates for Level 2 Modeling

Description	Modeled CO Emission Rate (lb/hr)	
	10,000 Tons of Hot Metal Per Day Processed Through No. 1 BOP Shop (lb/hr)	10,000 Tons of Hot Metal Per Day Processed Through No. 2 Q-BOP Shop (lb/hr)
Point Sources		
Blast Furnace No. 13 Stoves Stack	26.7814	26.7814
#1 BOP Gas Cleaning System Stack	636.5405	NA
#2 Q-BOP Gas Cleaning System Stack	NA	636.5405
#2 Q-BOP LMF #1 Hot Fume Exhaust Baghouse Stack	NA	1.2961
#2 Q-BOP LMF #2 Hot Fume Exhaust Baghouse Stack	NA	1.2961
#2 Q-BOP LMF #3 Hot Fume Exhaust/Material Handling Baghouse Stack	NA	1.3370
#2 Q-BOP RH-Degasser Slag Conditioning Baghouse Stack	NA	13.4857
Turboblower Boiler House Boiler Nos. 1,2,3 and 5	47.3613	47.3613
Turboblower Boiler House Boiler No. 6	20.5013	20.5013
Volume Sources		
Blast Furnace No. 13 Slag Pit	1.2221	1.2221
#1 BOP Fugitives (1)	15.8170	NA
#1 BOP Fugitives (2)	15.8170	NA
#2 Q-BOP Fugitives	NA	31.7981

TABLE 6-5A
U.S. STEEL-GARY WORKS
NO. 13 BLAST FURNACE RELINE PROJECT
CONSTRUCTION PERMIT APPLICATION
Results of PM_{10} Level 2 Air Dispersion Modeling

Scenario	Meteorological Data Year	Maximum Predicted Concentration (micrograms/cu. meter)		Significant Impact Levels (micrograms/cu. meter)	
		24-Hr Avg.	Annual	24-Hr Avg.	Annual
10,000 tons Hot Metal per Day Processed Through No. 1 BOP Shop	1991	2.79	0.36	5	1
	1992	3.82	0.32		
	1993	3.23	0.36		
	1994	2.83	0.35		
	1995	3.68	0.30		
10,000 tons Hot Metal per Day Processed Through No. 2 Q-BOP Shop	1991	3.16	0.44		
	1992	3.75	0.38		
	1993	3.33	0.43		
	1994	3.13	0.40		
	1995	3.74	0.37		
Maximum		3.82	0.44		

TABLE 6-5B
U.S. STEEL-GARY WORKS
NO. 13 BLAST FURNACE RELINE PROJECT
CONSTRUCTION PERMIT APPLICATION
Results of Oxides of Nitrogen Level 2 Air Dispersion Modeling

Scenario	Meteorological Data Year	Maximum Predicted Concentration (micrograms/cu. meter)	Significant Impact Levels (micrograms/cu. meter)
		Annual	Annual
10,000 tons Hot Metal per Day Processed Through No. 1 BOP Shop	1991	0.40	1
	1992	0.32	
	1993	0.34	
	1994	0.43	
	1995	0.29	
10,000 tons Hot Metal per Day Processed Through No. 2 Q-BOP Shop	1991	0.49	
	1992	0.37	
	1993	0.42	
	1994	0.43	
	1995	0.36	
Maximum		0.49	

TABLE 6-5C
U.S. STEEL-GARY WORKS
NO. 13 BLAST FURNACE RELINE PROJECT
CONSTRUCTION PERMIT APPLICATION
Resutls of Carbon Monoxide Level 2 Air Dispersion Modeling

Scenario	Meteorological Data Year	Maximum Predicted Concentration (micrograms/cu. meter)		Significant Impact Levels (micrograms/cu. meter)	
		8-Hr Avg.	1-Hr Avg.	8-Hr Avg.	1-Hr Avg.
10,000 tons Hot Metal per Day Processed Through No. 1 BOP Shop	1991	188.04	523.03	500	2000
	1992	187.68	532.70		
	1993	175.63	531.16		
	1994	179.63	505.35		
	1995	196.13	521.95		
10,000 tons Hot Metal per Day Processed Through No. 2 Q-BOP Shop	1991	240.86	554.84		
	1992	189.07	527.47		
	1993	194.63	585.95		
	1994	195.82	522.19		
	1995	189.74	546.56		
Maximum		240.86	585.95		

TABLE 8-1
U.S. STEEL - GARY WORKS
NO. 13 BLAST FURNACE RELINE PROJECT
CONSTRUCTION PERMIT APPLICATION

Typical Destruction Efficiencies
For Various CO Control Technologies[1]

Control Technology	Typical Control Efficiencies
Combustion in Blast Furnace Stove or Boiler	98+%
Thermal Oxidizer w/Heat Exchanger (Recuperative)	98+%
Flare	98+%

NOTE:
[1]From Air Pollution Technology Fact Sheet, CATC

TABLE 8-2
U.S. STEEL - GARY WORKS
NO. 13 BLAST FURNACE RELINE PROJECT
CONSTRUCTION PERMIT APPLICATION

BACT/LAER Clearinghouse Listing for Iron and Steel Making Permits
Available Control Technologies for Carbon Monoxide

Date	Facility Name	State	Process	Add-on Description	CO Emission Limit	Basis
Jan 2003	Ispat-Inland, Inc.	IN	Blast Furnace	Burn gas in Blast Furnace Stove	None	BACT-PSD
Dec 2000	Acme Steel Company	IL	Blast Furnace	Burn gas in Blast Furnace Stove	None	Non-PSD
Dec 2000	Acme Steel Company	IL	Blast Furnace	Gas Flare*	None	Non-PSD
Aug 1999	Steel Dynamics, Inc.	IN	Rotary Health Furnace (Natural Gas)	Afterburner*	1.4 lb/ton iron	BACT-PSD
Jul 1999	Steel Dynamics, Inc.	IN	Electric Arc Furnace	Thermal Oxidation at DEC Air Gap*	400 lb/hr (2 lb/ton iron)	BACT-PSD
Mar 1998	Steel Dynamics, Inc.	IN	Submerged Arc Furnace	Thermal Oxidation*	1.26 lb/ton iron	BACT-PSD

*These systems do not provide beneficial recovery of heat energy.

TABLE 8-3
U.S. STEEL - GARY WORKS
NO. 13 BLAST FURNACE RELINE PROJECT
CONSTRUCTION PERMIT APPLICATION

Spray Dryer Absorption Process
Estimated Cost per Ton of SO_2 Abated

(Estimated Capital Cost is $500,000)

Annualized Capital Cost – 15 yrs @4%	$53,333
Cost of Lime Injectant	$876,000
Cost of Additional Electric Power	$49,336
Cost of Additional Baghouse Dust Disposal @ $125/Ton	$1,095,000
Maintenance Cost 5% of Capital	$25,000
Total Annualized Cost	$2,098,670
Maximum Future SO_2 Emissions Tons/Yr	504
Estimated Control Efficiency	40.0%
Estimated Tons of SO_2 Abated	201
Cost per Ton of SO_2 Abated	$10,441

TABLE 8-4
U.S. STEEL - GARY WORKS
NO. 13 BLAST FURNACE RELINE PROJECT
CONSTRUCTION PERMIT APPLICATION

Estimated Cost Comparison of Polyester and Gortex Bags

	Polyester	Gortex®
Total Number of Bags	5,472	5,472
Cost Per Bag	$14	$30
Total Cost of 1 Set of Bags	$76,608	$164,160
Life of Bags (Years)	5	6
Annualized Cost of 1 Set of Bags	$15,322	$27,360
Guaranteed Maximum Discharge (grains/acf)	0.005	0.001
Average Flow Rate (acfm)	586,900	580,699
Maximum Future PM_{10} Emissions Tons/Yr	110	22
Annualized Cost per Ton of PM_{10} Abated		$137

TABLE 8-5
U.S. STEEL GARY WORKS
NO. 13 BLAST FURNACE RELINE PROJECT
CONSTRUCTION PERMIT APPLICATION

Effects of Slag Granulation on Emissions of Pollutants

Emission Factors (Lbs. per Ton of Slag)

Pollutants	Without Slag Granulation	With 100% Slag Granulation	With 75% Slag Granulation	Emission Reduction Efficiency at 75% Slag Granulation
PM_{10}	0.0680	0.0340	0.0427	37.21%
SO_2	0.3400	0.1000	0.1594	53.12%
NO_x	0.248	0.0100	0.0138	44.35%

CONSTRUCTION PERMIT APPLICATION
RELINE OF NO. 13 BLAST FURNACE
U.S. STEEL – GARY WORKS
PLANT ID NO. 089-00121

FIGURES

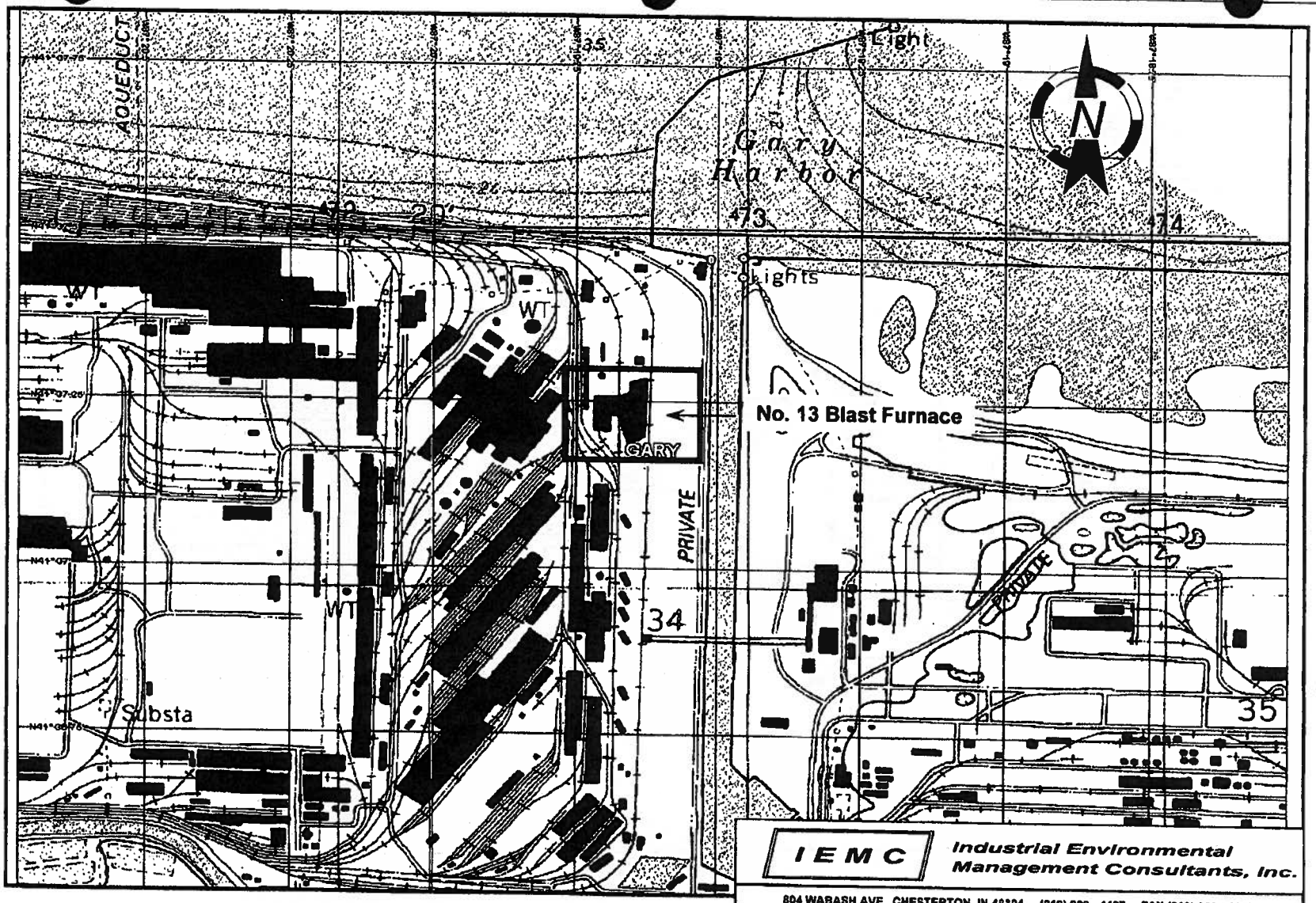

Figure 1 - 1

IEMC Industrial Environmental Management Consultants, Inc.

804 WABASH AVE., CHESTERTON, IN 46304 (219) 929 - 4487 FAX (219) 929 - 4105

U. S. STEEL - GARY WORKS
MAP SHOWING LOCATION OF
NO. 13 BLAST FURNACE FACILITY

DRAWN: NDH	SCALE: NTS		DATE: 06/19/04
CHECKED: EWB	DWG #: 1359		
FILE: USSG041026			

Figure 2-1

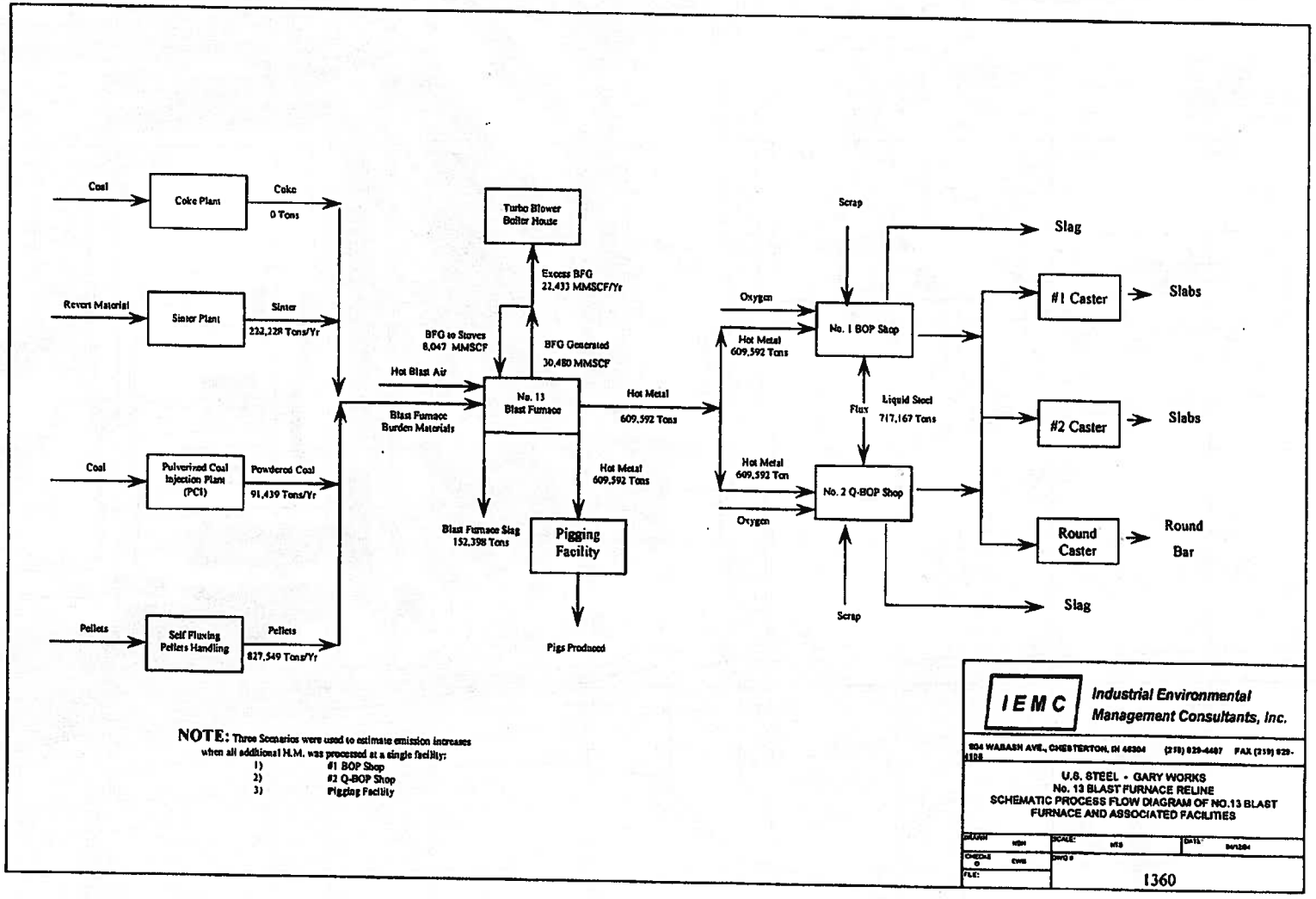
Coal
Coke Plant
Coke
0 Tons
Revert Material
Sinter Plant
Sinter
232,228 Tons/Yr
Coal
Pulverized Coal Injection Plant (PCI)
Powdered Coal
91,439 Tons/Yr
Pellets
Self Fluxing Pellets Handling
Pellets
827,549 Tons/Yr
Turbo Blower Boiler House
Excess BFG
22,433 MMSCF/Yr
BFG to Stoves
8,047 MMSCF
BFG Generated
30,480 MMSCF
Hot Blast Air
Blast Furnace Burden Materials
No. 13 Blast Furnace
Hot Metal
609,592 Tons
Hot Metal
609,592 Tons
Blast Furnace Slag
152,398 Tons
Pigging Facility
Pigs Produced
Oxygen
Hot Metal
609,592 Tons
Hot Metal
609,592 Ton
Oxygen
Scrap
No. 1 BOP Shop
Flux
Liquid Steel
717,167 Tons
No. 2 Q-BOP Shop
Scrap
Slag
Slag
#1 Caster
Slabs
#2 Caster
Slabs
Round Caster
Round Bar
NOTE: Three Scenarios were used to estimate emission increases when all additional H.M. was processed at a single facility:
1) #1 BOP Shop
2) #2 Q-BOP Shop
3) Pigging Facility
IEMC
Industrial Environmental Management Consultants, Inc.
904 WABASH AVE., CHESTERTON, IN 46304 (219) 929-4407 FAX (219) 929-4128
U.S. STEEL - GARY WORKS
No. 13 BLAST FURNACE RELINE
SCHEMATIC PROCESS FLOW DIAGRAM OF NO.13 BLAST FURNACE AND ASSOCIATED FACILITIES
DRAWN
SCALE:
DATE:
CHECKED
DWG #
FILE:
1360

FIGURE 3 - 1
U.S. STEEL - GARY WORKS
NO. 13 BLAST FURNACE RELINE PERMIT
MONTHLY HOT METAL PRODUCTION 1995 THROUGH 2003

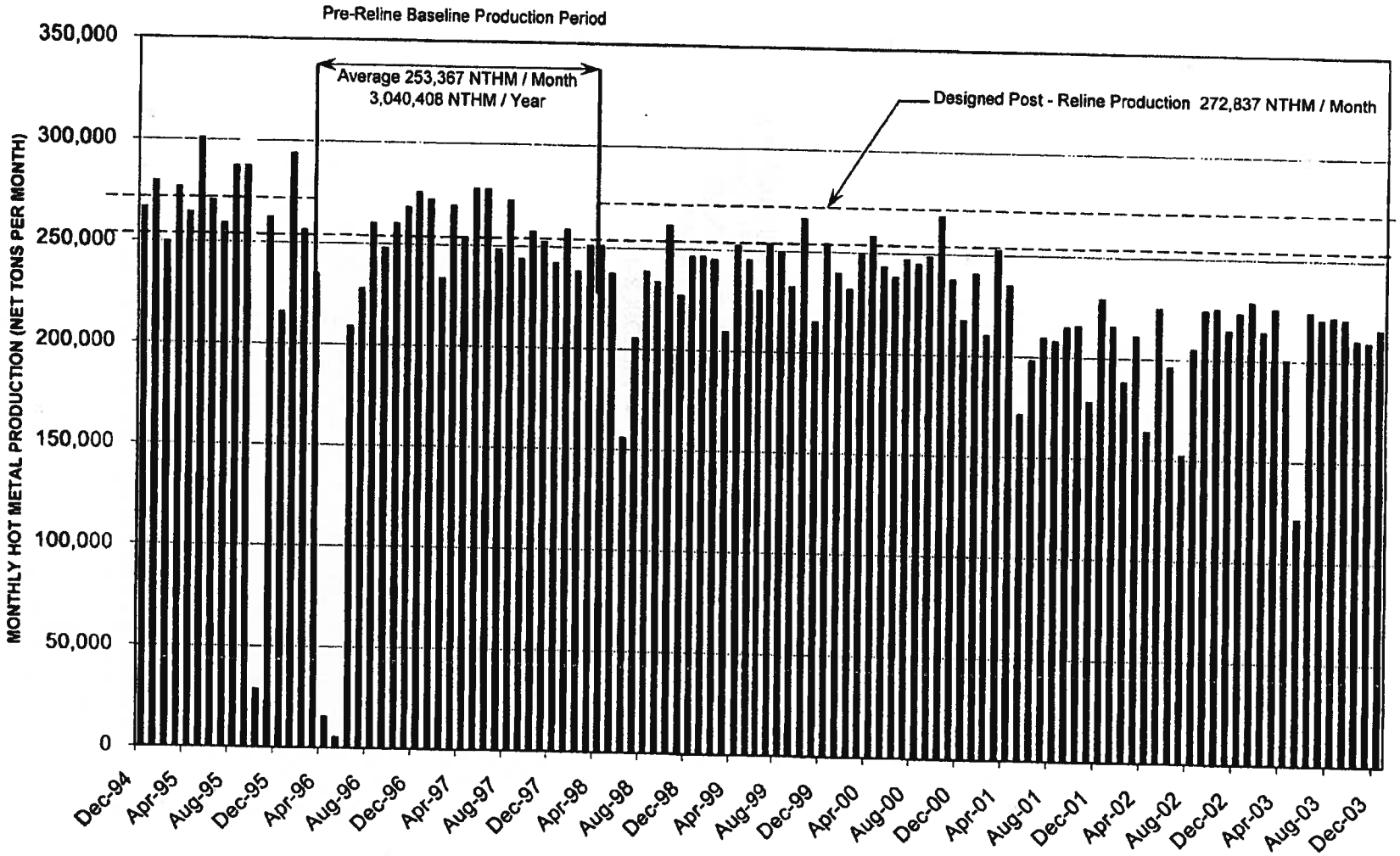

CONSTRUCTION PERMIT APPLICATION
RELINE OF NO. 13 BLAST FURNACE
U.S. STEEL – GARY WORKS
PLANT ID NO. 089-00121

APPENDIX 3-1

CONSTRUCTION PERMIT APPLICATION
RELINE OF NO. 13 BLAST FURNACE
U.S. STEEL – GARY WORKS
PLANT ID NO. 089-00121

APPENDIX 3-1

US STEEL GARY WORKS
CONTRUCTION PERMIT APPLICATION
NO. 13 BLAST FURNACE RELINE
CHANGE IN HAZARDOUS AIR POLLUTANTS EMISSION RATE

Source Description	Case I	Case II
	Change in Emission Rate (tons/yr)	Change in Emission Rate (tons/yr)
No. 13 Blast Furnace Casthouse Baghouse	2.40E-02	2.40E-02
No. 13 Blast Furnace Stoves (BFG)	6.54E-01	6.54E-01
No. 13 Blast Furnace Stoves (NG)	2.40E-01	2.40E-01
TBBH Boilers (BFG)	1.82E+00	1.82E+00
No. 1 BOP HM Desulfurization Baghouse	1.81E-02	0.00E+00
No. 1 BOP Gas Cleaner	9.63E-02	0.00E+00
No. 1 BOP CAS Bell/OB Lancing Baghouse	3.21E-02	0.00E+00
No. 2 Caster Mold Baghouses	0.00E+00	2.45E-04
No. 2 QBOP HM Desulfurization Baghouse	0.00E+00	1.17E-02
No. 2 QBOP Secondary Emissions Baghouse	0.00E+00	4.35E-02
No. 2 QBOP Gas Cleaner	0.00E+00	2.33E-01
No. 1 LMF Fume Exhaust Baghouse	0.00E+00	8.11E-02
No. 2 LMF Fume Exhaust Baghouse	0.00E+00	8.11E-02
No. 3 LMF Fume Exhaust/Mat. Handling Baghouse	0.00E+00	4.03E-02
TOTAL HAPs (tons/yr)	**2.8880**	**3.2327**

Table A3 - A
US STEEL GARY WORKS
CONSTRUCTION PERMIT APPLICATION
NO. 13 BLAST FURNACE RELINE
CALCULATION OF CHANGE IN HAZARDOUS AIR POLLUTANTS
EMISSION RATE FROM PROCESS SOURCES
All Additional Hot Metal Through The No. 1 BOP

Emission Unit: Iron Producing
Emission Location: No. 13 Blast Furnace Casthouse Baghouse

Change in PM_{10} Emission Rate (tons/yr)	5.00

Hazardous Air Pollutant	Weight Percent of HAP in Dust	HAP Emission Rate (Based on PM10)	
		(tons/yr)	(lbs/hr)
Antimony	0.001200%	0.00006	0.00001
Arsenic	0.001120%	0.00006	0.00001
Chromium	0.025600%	0.00128	0.00029
Lead	0.005300%	0.00026	0.00006
Manganese	0.441000%	0.02204	0.00503
Selenium	0.004400%	0.00022	0.00005
POM	0.000790%	0.00004	0.00001
Quinoline	0.000050%	0.00000	0.00000
	Totals	0.02396	0.00547

file: process.xls (Page idb)

Table A3 - C
US STEEL GARY WORKS
CONSTRUCTION PERMIT APPLICATION
NO. 13 BLAST FURNACE RELINE
CALCULATION OF CHANGE IN HAZARDOUS AIR POLLUTANTS
EMISSION RATE FROM COMBUSTION SOURCES
All Additional Hot Metal Through The No. 1 BOP

Emission Unit: No. 13 Blast Furnace
Emission Location: Stoves (BFG)

Change in Blast Furnace Gas Consumption (MMSCF/yr)	8,047

Hazardous Air Pollutant	Emission Factor (lb/MMSCF)[1]	Change in HAP Emission Rate	
		(tons/yr)	(lbs/hr)
Non-POM HAPs			
Acetaldehyde	5.88E-03	2.37E-02	5.40E-03
Acetophenone	1.55E-04	6.24E-04	1.42E-04
Acrolein	3.00E-03	1.21E-02	2.76E-03
Benzene	1.34E-02	5.39E-02	1.23E-02
Benzyl Chloride	7.23E-03	2.91E-02	6.64E-03
DEHP	7.54E-04	3.03E-03	6.93E-04
Bromoform	4.02E-04	1.62E-03	3.69E-04
Carbon Disulfide	1.34E-03	5.39E-03	1.23E-03
Carbonyl Sulfide	9.78E-03	3.93E-02	8.98E-03
2-Chloroacetophenone	7.25E-05	2.92E-04	6.66E-05
Chlorobenzene	2.27E-04	9.13E-04	2.09E-04
Chloroform	6.09E-04	2.45E-03	5.59E-04
Cumene	5.48E-05	2.20E-04	5.03E-05
Dimethyl Sulfate	4.96E-04	2.00E-03	4.56E-04
2,4-Dinitrotoluene	3.10E-06	1.25E-05	2.85E-06
Ethylbenzene	9.71E-04	3.91E-03	8.92E-04
Ethyl Chloride	4.34E-04	1.75E-03	3.99E-04
Ethelyne Dibromide	1.22E-05	4.91E-05	1.12E-05
Ethelyne Dichloride	4.13E-04	1.66E-03	3.79E-04
Formaldehyde	2.48E-03	9.98E-03	2.28E-03
Hexane	6.92E-04	2.78E-03	6.36E-04
Isophorone	5.99E-03	2.41E-02	5.50E-03
Methyl Bromide	1.65E-03	6.64E-03	1.52E-03
Methyl Chloride	5.47E-03	2.20E-02	5.02E-03
Methyl Chloroform (1,1,1-Trichloroethane)	1.49E-04	5.99E-04	1.37E-04
Methyl Ethyl Ketone (MEK)	4.03E-03	1.62E-02	3.70E-03
Methylhydrazine	1.76E-03	7.08E-03	1.62E-03
Methyl Methacrylate	2.06E-04	8.29E-04	1.89E-04
Methyl tert butyl ether	3.61E-04	1.45E-03	3.32E-04
Methylene Chloride	3.00E-03	1.21E-02	2.76E-03
Naphthalene	4.73E-02	1.90E-01	4.34E-02
Phenol	1.65E-04	6.64E-04	1.52E-04
Propionaldehyde	3.92E-03	1.58E-02	3.60E-03
Styrene	2.58E-04	1.04E-03	2.37E-04
Tetrachloroethylene	4.44E-04	1.79E-03	4.08E-04
Toluene	2.48E-03	9.98E-03	2.28E-03
Vinyl Acetate	7.83E-05	3.15E-04	7.19E-05
Xylene	3.82E-04	1.54E-03	3.51E-04
Subtotal of Non-POMs HAPs		*5.07E-01*	*1.16E-01*
Metallic HAPs			
Antimony	2.00E-04	8.05E-04	1.84E-04
Cadmium	5.60E-06	2.25E-05	5.14E-06
Chromium	9.61E-05	3.87E-04	8.83E-05
Cyanide	2.58E-02	1.04E-01	2.37E-02
HCN	2.74E-03	1.10E-02	2.52E-03
Lead	6.70E-05	2.70E-04	6.15E-05
Manganese	7.60E-03	3.06E-02	6.98E-03
Subtotal Metallic HAPs		*1.47E-01*	*3.35E-02*
	Totals	**6.54E-01**	**1.49E-01**

[1] Emission Factors from Ispat Inland HAPs Inventory

Table A3 - B
US STEEL GARY WORKS
CONSTRUCTION PERMIT APPLICATION
NO. 13 BLAST FURNACE RELINE
CALCULATION OF CHANGE IN HAZARDOUS AIR POLLUTANTS
EMISSION RATE FROM COMBUSTION SOURCES
All Additional Hot Metal Through The No. 1 BOP

Emission Unit: No. 13 Blast Furnace
Emission Location: Stoves (NG)

Change in Natural Gas Consumption (MMSCF/yr)	254.43

Hazardous Air Pollutant	Emission Factor (lb/MMSCF)[1]	Change in HAP Emission Rate	
		(tons/yr)	(lbs/hr)
Non-POMs			
Benzene	2.10E-03	2.67E-04	6.10E-05
Dichlorobenzene	1.20E-03	1.53E-04	3.49E-05
Formaldehyde	7.50E-02	9.54E-03	2.18E-03
Hexane	1.80E+00	2.29E-01	5.23E-02
Naphthalene	6.10E-04	7.76E-05	1.77E-05
Toluene	3.40E-03	4.33E-04	9.88E-05
Subtotal Non-POMs		*2.39E-01*	*5.47E-02*
POMs			
2-Methylnaphthalene	2.40E-05	3.05E-06	6.97E-07
3-Methylchloranthrene	1.80E-06	2.29E-07	5.23E-08
7,12-Dimethylbenz(a)-anthracene	1.60E-05	2.04E-06	4.65E-07
Acenaphthene	1.80E-06	2.29E-07	5.23E-08
Acenaphthylene	1.80E-06	2.29E-07	5.23E-08
Anthracene	2.40E-06	3.05E-07	6.97E-08
Benz(a)anthracene	1.80E-06	2.29E-07	5.23E-08
Benzo(a)pyrene	1.20E-06	1.53E-07	3.49E-08
Benzo(b)fluoranthene	1.80E-06	2.29E-07	5.23E-08
Benzo(g,h,I)perylene	1.20E-06	1.53E-07	3.49E-08
Benzo(k)fluoranthene	1.80E-06	2.29E-07	5.23E-08
Chrysene	1.80E-06	2.29E-07	5.23E-08
Dibenzo(a,h)anthracene	1.20E-06	1.53E-07	3.49E-08
Fluoranthene	3.00E-06	3.82E-07	8.71E-08
Fluorene	2.80E-06	3.56E-07	8.13E-08
Indeno(1,2,3-cd)pyrene	1.80E-06	2.29E-07	5.23E-08
Phenanathrene	1.70E-05	2.16E-06	4.94E-07
Pyrene	5.00E-06	6.36E-07	1.45E-07
Subtotal POMs		*1.12E-05*	*2.56E-06*
Metallic HAPs			
Arsenic	2.00E-04	2.54E-05	5.81E-06
Beryllium	1.20E-05	1.53E-06	3.49E-07
Cadmium	1.10E-03	1.40E-04	3.19E-05
Chromium	1.40E-03	1.78E-04	4.07E-05
Cobalt	8.40E-05	1.07E-05	2.44E-06
Manganese	3.80E-04	4.83E-05	1.10E-05
Mercury	2.60E-04	3.31E-05	7.55E-06
Nickel	2.10E-03	2.67E-04	6.10E-05
Selenium	2.40E-05	3.05E-06	6.97E-07
Subtotal Metallic HAPs		*7.07E-04*	*1.61E-04*
	Total HAPs	**2.40E-01**	**5.48E-02**

[1] Emission Factors specified in EPA's AP-42 Section 1.4, July 1998 for Natural Gas Combustio

Table A3 - D
US STEEL GARY WORKS
CONSTRUCTION PERMIT APPLICATION
NO. 13 BLAST FURNACE RELINE
CALCULATION OF CHANGE IN HAZARDOUS AIR POLLUTANTS
EMISSION RATE FROM COMBUSTION SOURCES
All Additional Hot Metal Through The No. 1 BOP

Emission Unit: TBBH Boilers
Emission Location: TBBH Boilers (BFG)

Change in Blast Furnace Gas Consumption (MMSCF/yr)	22,433

Hazardous Air Pollutant	Emission Factor (lb/MMSCF)[1]	Change in HAP Emission Rate	
		(tons/yr)	(lbs/hr)
Non-POM HAPs			
Acetaldehyde	5.88E-03	6.60E-02	1.51E-02
Acetophenone	1.55E-04	1.74E-03	3.97E-04
Acrolein	3.00E-03	3.36E-02	7.68E-03
Benzene	1.34E-02	1.50E-01	3.43E-02
Benzyl Chloride	7.23E-03	8.11E-02	1.85E-02
DEHP	7.54E-04	8.46E-03	1.93E-03
Bromoform	4.02E-04	4.51E-03	1.03E-03
Carbon Disulfide	1.34E-03	1.50E-02	3.43E-03
Carbonyl Sulfide	9.78E-03	1.10E-01	2.50E-02
2-Chloroacetophenone	7.25E-05	8.13E-04	1.86E-04
Chlorobenzene	2.27E-04	2.55E-03	5.81E-04
Chloroform	6.09E-04	6.83E-03	1.56E-03
Cumene	5.48E-05	6.15E-04	1.40E-04
Dimethyl Sulfate	4.96E-04	5.56E-03	1.27E-03
2,4-Dinitrotoluene	3.10E-06	3.48E-05	7.94E-06
Ethylbenzene	9.71E-04	1.09E-02	2.49E-03
Ethyl Chloride	4.34E-04	4.87E-03	1.11E-03
Ethelyne Dibromide	1.22E-05	1.37E-04	3.12E-05
Ethelyne Dichloride	4.13E-04	4.63E-03	1.06E-03
Formaldehyde	2.48E-03	2.78E-02	6.35E-03
Hexane	6.92E-04	7.76E-03	1.77E-03
Isophorone	5.99E-03	6.72E-02	1.53E-02
Methyl Bromide	1.65E-03	1.85E-02	4.23E-03
Methyl Chloride	5.47E-03	6.14E-02	1.40E-02
Methyl Chloroform (1,1,1-Trichloroethane)	1.49E-04	1.67E-03	3.82E-04
Methyl Ethyl Ketone (MEK)	4.03E-03	4.52E-02	1.03E-02
Methylhydrazine	1.76E-03	1.97E-02	4.51E-03
Methyl Methacrylate	2.06E-04	2.31E-03	5.28E-04
Methyl tert butyl ether	3.61E-04	4.05E-03	9.24E-04
Methylene Chloride	3.00E-03	3.36E-02	7.68E-03
Naphthalene	4.73E-02	5.31E-01	1.21E-01
Phenol	1.65E-04	1.85E-03	4.23E-04
Propionaldehyde	3.92E-03	4.40E-02	1.00E-02
Styrene	2.58E-04	2.89E-03	6.61E-04
Tetrachloroethylene	4.44E-04	4.98E-03	1.14E-03
Toluene	2.48E-03	2.78E-02	6.35E-03
Vinyl Acetate	7.83E-05	8.78E-04	2.01E-04
Xylene	3.82E-04	4.28E-03	9.78E-04
Subtotal of Non-POMs HAPs		*1.41E+00*	*3.23E-01*
Metallic HAPs			
Antimony	2.00E-04	2.24E-03	5.12E-04
Cadmium	5.60E-06	6.28E-05	1.43E-05
Chromium	9.61E-05	1.08E-03	2.46E-04
Cyanide	2.58E-02	2.89E-01	6.61E-02
HCN	2.74E-03	3.07E-02	7.02E-03
Lead	6.70E-05	7.52E-04	1.72E-04
Manganese	7.60E-03	8.52E-02	1.95E-02
Subtotal Metallic HAPs		*4.10E-01*	*9.35E-02*
	Totals	**1.82E+00**	**4.16E-01**

[1] Emission Factors from Ispat Inland HAPs Inventory

Table A3 - E
US STEEL GARY WORKS
CONSTRUCTION PERMIT APPLICATION
NO. 13 BLAST FURNACE RELINE
CALCULATION OF CHANGE IN HAZARDOUS AIR POLLUTANTS
EMISSION RATE FROM PROCESS SOURCES
All Additional Hot Metal Through The No. 1 BOP

Emission Unit: Steel Producing
Emission Location: No. 1 BOP HM Desulfurization Baghouse

Change in PM_{10} Emission Rate (tons/yr)	3.81

Hazardous Air Pollutant	Weight Percent of HAP in Dust	HAP Emission Rate (Based on PM10)	
		(tons/yr)	(lbs/hr)
Antimony	0.001900%	0.00007	0.00002
Arsenic	0.003300%	0.00013	0.00003
Chromium	0.021700%	0.00083	0.00019
Cobalt	0.000390%	0.00001	0.00000
Lead	0.009500%	0.00036	0.00008
Manganese	0.437000%	0.01667	0.00380
Selenium	0.000620%	0.00002	0.00001
	Totals	0.01809	0.00413

file: process.xls (Page ssa)

Table A3 - F
US STEEL GARY WORKS
CONSTRUCTION PERMIT APPLICATION
NO. 13 BLAST FURNACE RELINE
CALCULATION OF CHANGE IN HAZARDOUS AIR POLLUTANTS
EMISSION RATE FROM PROCESS SOURCES
All Additional Hot Metal Through The No. 1 BOP

Emission Unit: Steel Producing
Emission Location: No. 1 BOP Gas Cleaner

Change in PM_{10} Emission Rate (tons/yr)	16.07

Hazardous Air Pollutant	Weight Percent of HAP in Sludge	HAP Emission Rate (Based on PM10)	
		(tons/yr)	(lbs/hr)
Antimony	0.001000%	0.00016	0.00004
Arsenic	0.000490%	0.00008	0.00002
Chromium	0.025700%	0.00413	0.00094
Cobalt	0.000200%	0.00003	0.00001
Lead	0.094000%	0.01511	0.00345
Manganese	0.478000%	0.07684	0.01754
	Totals	0.09635	0.02200

file: process.xls (Page ssb)

Table A3 - G
US STEEL GARY WORKS
CONSTRUCTION PERMIT APPLICATION
NO. 13 BLAST FURNACE RELINE
CALCULATION OF CHANGE IN HAZARDOUS AIR POLLUTANTS
EMISSION RATE FROM PROCESS SOURCES
All Additional Hot Metal Through The No. 1 BOP

Emission Unit: Steel Producing
Emission Location: No. 1 BOP CAS Bell/OB Lancing Baghouse

Change in PM_{10} Emission Rate (tons/yr)	1.24

Hazardous Air Pollutant	Weight Percent of HAP in Dust	HAP Emission Rate (Based on PM10)	
		(tons/yr)	(lbs/hr)
Antimony	0.000740%	0.00001	0.00000
Arsenic	0.002500%	0.00003	0.00001
Cadmium	0.014200%	0.00018	0.00004
Chromium	0.034800%	0.00043	0.00010
Cobalt	0.000810%	0.00001	0.00000
Lead	0.290000%	0.00359	0.00082
Manganese	2.250000%	0.02784	0.00636
Mercury	0.000017%	0.00000	0.00000
	Totals	0.03209	0.00733

file: process.xls (Page ssc)

Table A3 - H
US STEEL GARY WORKS
CONSTRUCTION PERMIT APPLICATION
NO. 13 BLAST FURNACE RELINE
CALCULATION OF CHANGE IN HAZARDOUS AIR POLLUTANTS
EMISSION RATE FROM PROCESS SOURCES
All Additional Hot Metal Through The No. 1 BOP

Emission Unit: Steel Producing
Emission Location: No. 2 Caster Mold Baghouses

Change in PM_{10} Emission Rate (tons/yr)	0.00

Hazardous Air Pollutant	Weight Percent of HAP in Dust	HAP Emission Rate (Based on PM10)	
		(tons/yr)	(lbs/hr)
Antimony	0.000560%	0.00000	0.00000
Arsenic	0.000620%	0.00000	0.00000
Cadmium	0.004380%	0.00000	0.00000
Chromium	0.005170%	0.00000	0.00000
Cobalt	0.002600%	0.00000	0.00000
Lead	0.022000%	0.00000	0.00000
Manganese	0.898000%	0.00000	0.00000
Mercury	0.000028%	0.00000	0.00000
	Totals	0.00000	0.00000

file: process.xls (Page nsa)

Table A3 - I
US STEEL GARY WORKS
CONSTRUCTION PERMIT APPLICATION
NO. 13 BLAST FURNACE RELINE
CALCULATION OF CHANGE IN HAZARDOUS AIR POLLUTANTS
EMISSION RATE FROM PROCESS SOURCES
All Additional Hot Metal Through The No. 1 BOP

Emission Unit: Steel Producing
Emission Location: No. 2 QBOP HM Desulfurization Baghouse

Change in PM_{10} Emission Rate (tons/yr)	0.00

Hazardous Air Pollutant	Weight Percent of HAP in Dust	HAP Emission Rate (Based on PM10)	
		(tons/yr)	(lbs/hr)
Antimony	0.001900%	0.00000	0.00000
Arsenic	0.003300%	0.00000	0.00000
Chromium	0.021700%	0.00000	0.00000
Cobalt	0.000390%	0.00000	0.00000
Lead	0.009500%	0.00000	0.00000
Manganese	0.437000%	0.00000	0.00000
Selenium	0.000620%	0.00000	0.00000
	Totals	0.00000	0.00000

file: process.xls (Page nsb)

Table A3 - J
US STEEL GARY WORKS
CONSTRUCTION PERMIT APPLICATION
NO. 13 BLAST FURNACE RELINE
CALCULATION OF CHANGE IN HAZARDOUS AIR POLLUTANTS
EMISSION RATE FROM PROCESS SOURCES
All Additional Hot Metal Through The No. 1 BOP

Emission Unit: Steel Producing
Emission Location: No. 2 QBOP Secondary Emissions Baghouse

Change in PM_{10} Emission Rate (tons/y	0.00

Hazardous Air Pollutant	Weight Percent of HAP in Dust	HAP Emission Rate (Based on PM10)	
		(tons/yr)	(lbs/hr)
Antimony	0.001200%	0.00000	0.00000
Arsenic	0.000720%	0.00000	0.00000
Cadmium	0.039900%	0.00000	0.00000
Chromium	0.040000%	0.00000	0.00000
Cobalt	0.000760%	0.00000	0.00000
Lead	0.084100%	0.00000	0.00000
Manganese	0.754000%	0.00000	0.00000
Mercury	0.000238%	0.00000	0.00000
	Totals	0.00000	0.00000

file: process.xls (Page nsc)

Table A3 - K
US STEEL GARY WORKS
CONSTRUCTION PERMIT APPLICATION
NO. 13 BLAST FURNACE RELINE
CALCULATION OF CHANGE IN HAZARDOUS AIR POLLUTANTS
EMISSION RATE FROM PROCESS SOURCES
All Additional Hot Metal Through The No. 1 BOP

Emission Unit: Steel Producing
Emission Location: No. 2 QBOP Gas Cleaner

Change in PM_{10} Emission Rate (tons/yr)	0.00

Hazardous Air Pollutant	Weight Percent of HAP in Dust	HAP Emission Rate (Based on PM10)	
		(tons/yr)	(lbs/hr)
Antimony	0.000910%	0.00000	0.00000
Arsenic	0.000790%	0.00000	0.00000
Cadmium	0.001300%	0.00000	0.00000
Chromium	0.016800%	0.00000	0.00000
Lead	0.120000%	0.00000	0.00000
Manganese	0.447000%	0.00000	0.00000
	Totals	0.00000	0.00000

file: process.xls (Page nsd)

Table A3 - L
US STEEL GARY WORKS
CONSTRUCTION PERMIT APPLICATION
NO. 13 BLAST FURNACE RELINE
CALCULATION OF CHANGE IN HAZARDOUS AIR POLLUTANTS
EMISSION RATE FROM PROCESS SOURCES
All Additional Hot Metal Through The No. 1 BOP

Emission Unit: Steel Producing
Emission Location: No. 1 LMF Fume Exhaust Baghouse

Change in PM_{10} Emission Rate (tons/yr)	0.00

Hazardous Air Pollutant	Weight Percent of HAP in Dust	HAP Emission Rate (Based on PM10)	
		(tons/yr)	(lbs/hr)
Antimony	0.002000%	0.00000	0.00000
Arsenic	0.004200%	0.00000	0.00000
Cadmium	0.002560%	0.00000	0.00000
Chromium	0.049000%	0.00000	0.00000
Cobalt	0.001800%	0.00000	0.00000
Manganese	6.690000%	0.00000	0.00000
Mercury	0.000009%	0.00000	0.00000
Nickel	0.020600%	0.00000	0.00000
	Totals	0.00000	0.00000

file: process.xls (Page nse)

Table A3 - M
US STEEL GARY WORKS
CONSTRUCTION PERMIT APPLICATION
NO. 13 BLAST FURNACE RELINE
CALCULATION OF CHANGE IN HAZARDOUS AIR POLLUTANTS
EMISSION RATE FROM PROCESS SOURCES
All Additional Hot Metal Through The No. 1 BOP

Emission Unit: Steel Producing
Emission Location: No. 2 LMF Fume Exhaust Baghouse

Change in PM_{10} Emission Rate (tons/yr)	0.00

Hazardous Air Pollutant	Weight Percent of HAP in Dust	HAP Emission Rate (Based on PM10)	
		(tons/yr)	(lbs/hr)
Antimony	0.002000%	0.00000	0.00000
Arsenic	0.004200%	0.00000	0.00000
Cadmium	0.002560%	0.00000	0.00000
Chromium	0.049000%	0.00000	0.00000
Cobalt	0.001800%	0.00000	0.00000
Manganese	6.690000%	0.00000	0.00000
Mercury	0.000009%	0.00000	0.00000
Nickel	0.020600%	0.00000	0.00000
	Totals	0.00000	0.00000

file: process.xls (Page nsf)

Table A3 - N
US STEEL GARY WORKS
CONSTRUCTION PERMIT APPLICATION
NO. 13 BLAST FURNACE RELINE
CALCULATION OF CHANGE IN HAZARDOUS AIR POLLUTANTS
EMISSION RATE FROM PROCESS SOURCES
All Additional Hot Metal Through The No. 1 BOP

Emission Unit: Steel Producing
Emission Location: No. 3 LMF Fume Exhaust/Mat. Handling Baghouse

Change in PM_{10} Emission Rate (tons/yr)	0.00

Hazardous Air Pollutant	Weight Percent of HAP in Dust	HAP Emission Rate (Based on PM10)	
		(tons/yr)	(lbs/hr)
Antimony	0.002000%	0.00000	0.00000
Arsenic	0.004200%	0.00000	0.00000
Cadmium	0.002560%	0.00000	0.00000
Chromium	0.049000%	0.00000	0.00000
Cobalt	0.001800%	0.00000	0.00000
Manganese	6.690000%	0.00000	0.00000
Mercury	0.000009%	0.00000	0.00000
Nickel	0.020600%	0.00000	0.00000
	Totals	0.00000	0.00000

file: process.xls (Page nsg)

Table A3 - O
US STEEL GARY WORKS
CONSTRUCTION PERMIT APPLICATION
NO. 13 BLAST FURNACE RELINE
CALCULATION OF CHANGE IN HAZARDOUS AIR POLLUTANTS
All Additional Hot Metal Through No. 2 Q-BOP

Emission Unit: Iron Producing
Emission Location: No. 13 Blast Furnace Casthouse Baghouse

Change in PM_{10} Emission Rate (tons/yr)	5.00

Hazardous Air Pollutant	Weight Percent of HAP in Dust	HAP Emission Rate (Based on PM10)	
		(tons/yr)	(lbs/hr)
Antimony	0.001200%	0.00006	0.00001
Arsenic	0.001120%	0.00006	0.00001
Chromium	0.025600%	0.00128	0.00029
Lead	0.005300%	0.00026	0.00006
Manganese	0.441000%	0.02204	0.00503
Selenium	0.004400%	0.00022	0.00005
POM	0.000790%	0.00004	0.00001
Quinoline	0.000050%	0.00000	0.00000
	Totals	0.02396	0.00547

file: process.xls (Page idb)

Table A3 - P
US STEEL GARY WORKS
CONSTRUCTION PERMIT APPLICATION
NO. 13 BLAST FURNACE RELINE
CALCULATION OF CHANGE IN HAZARDOUS AIR POLLUTANTS
EMISSION RATE FROM COMBUSTION SOURCES
All Additional Hot Metal Through No. 2 Q-BOP

Emission Unit: No. 13 Blast Furnace
Emission Location: Stoves (NG)

Change in Natural Gas Consumption (MMSCF/yr)	254.43

Hazardous Air Pollutant	Emission Factor (lb/MMSCF)[1]	Change in HAP Emission Rate	
		(tons/yr)	(lbs/hr)
Non-POMs			
Benzene	2.10E-03	2.67E-04	6.10E-05
Dichlorobenzene	1.20E-03	1.53E-04	3.49E-05
Formaldehyde	7.50E-02	9.54E-03	2.18E-03
Hexane	1.80E+00	2.29E-01	5.23E-02
Naphthalene	6.10E-04	7.76E-05	1.77E-05
Toluene	3.40E-03	4.33E-04	9.88E-05
Subtotal Non-POMs		*2.39E-01*	*5.47E-02*
POMs			
2-Methylnaphthalene	2.40E-05	3.05E-06	6.97E-07
3-Methylchloranthrene	1.80E-06	2.29E-07	5.23E-08
7,12-Dimethylbenz(a)-anthracene	1.60E-05	2.04E-06	4.65E-07
Acenaphthene	1.80E-06	2.29E-07	5.23E-08
Acenaphthylene	1.80E-06	2.29E-07	5.23E-08
Anthracene	2.40E-06	3.05E-07	6.97E-08
Benz(a)anthracene	1.80E-06	2.29E-07	5.23E-08
Benzo(a)pyrene	1.20E-06	1.53E-07	3.49E-08
Benzo(b)fluoranthene	1.80E-06	2.29E-07	5.23E-08
Benzo(g,h,I)perylene	1.20E-06	1.53E-07	3.49E-08
Benzo(k)fluoranthene	1.80E-06	2.29E-07	5.23E-08
Chrysene	1.80E-06	2.29E-07	5.23E-08
Dibenzo(a,h)anthracene	1.20E-06	1.53E-07	3.49E-08
Fluoranthene	3.00E-06	3.82E-07	8.71E-08
Fluorene	2.80E-06	3.56E-07	8.13E-08
Indeno(1,2,3-cd)pyrene	1.80E-06	2.29E-07	5.23E-08
Phenanathrene	1.70E-05	2.16E-06	4.94E-07
Pyrene	5.00E-06	6.36E-07	1.45E-07
Subtotal POMs		*1.12E-05*	*2.56E-06*
Metallic HAPs			
Arsenic	2.00E-04	2.54E-05	5.81E-06
Beryllium	1.20E-05	1.53E-06	3.49E-07
Cadmium	1.10E-03	1.40E-04	3.19E-05
Chromium	1.40E-03	1.78E-04	4.07E-05
Cobalt	8.40E-05	1.07E-05	2.44E-06
Manganese	3.80E-04	4.83E-05	1.10E-05
Mercury	2.60E-04	3.31E-05	7.55E-06
Nickel	2.10E-03	2.67E-04	6.10E-05
Selenium	2.40E-05	3.05E-06	6.97E-07
Subtotal Metallic HAPs		*7.07E-04*	*1.61E-04*
	Total HAPs	**2.40E-01**	**5.48E-02**

[1] Emission Factors specified in EPA's AP-42 Section 1.4, July 1998 for Natural Gas Combustio

Table A3 - Q
US STEEL GARY WORKS
CONSTRUCTION PERMIT APPLICATION
NO. 13 BLAST FURNACE RELINE
CALCULATION OF CHANGE IN HAZARDOUS AIR POLLUTANTS
EMISSION RATE FROM COMBUSTION SOURCES
All Additional Hot Metal Through No. 2 Q-BOP

Emission Unit: No. 13 Blast Furnace
Emission Location: Stoves (BFG)

Change In Blast Furnace Gas Consumption (MMSCF/yr)	8,047

Hazardous Air Pollutant	Emission Factor (lb/MMSCF)[1]	Change in HAP Emission Rate (tons/yr)	(lbs/hr)
Non-POM HAPs			
Acetaldehyde	5.88E-03	2.37E-02	5.40E-03
Acetophenone	1.55E-04	6.24E-04	1.42E-04
Acrolein	3.00E-03	1.21E-02	2.76E-03
Benzene	1.34E-02	5.39E-02	1.23E-02
Benzyl Chloride	7.23E-03	2.91E-02	6.64E-03
DEHP	7.54E-04	3.03E-03	6.93E-04
Bromoform	4.02E-04	1.62E-03	3.69E-04
Carbon Disulfide	1.34E-03	5.39E-03	1.23E-03
Carbonyl Sulfide	9.78E-03	3.93E-02	8.98E-03
2-Chloroacetophenone	7.25E-05	2.92E-04	6.66E-05
Chlorobenzene	2.27E-04	9.13E-04	2.09E-04
Chloroform	6.09E-04	2.45E-03	5.59E-04
Cumene	5.48E-05	2.20E-04	5.03E-05
Dimethyl Sulfate	4.96E-04	2.00E-03	4.56E-04
2,4-Dinitrotoluene	3.10E-06	1.25E-05	2.85E-06
Ethylbenzene	9.71E-04	3.91E-03	8.92E-04
Ethyl Chloride	4.34E-04	1.75E-03	3.99E-04
Ethelyne Dibromide	1.22E-05	4.91E-05	1.12E-05
Ethelyne Dichloride	4.13E-04	1.66E-03	3.79E-04
Formaldehyde	2.48E-03	9.98E-03	2.28E-03
Hexane	6.92E-04	2.78E-03	6.36E-04
Isophorone	5.99E-03	2.41E-02	5.50E-03
Methyl Bromide	1.65E-03	6.64E-03	1.52E-03
Methyl Chloride	5.47E-03	2.20E-02	5.02E-03
Methyl Chloroform (1,1,1-Trichloroethane)	1.49E-04	5.99E-04	1.37E-04
Methyl Ethyl Ketone (MEK)	4.03E-03	1.62E-02	3.70E-03
Methylhydrazine	1.76E-03	7.08E-03	1.62E-03
Methyl Methacrylate	2.06E-04	8.29E-04	1.89E-04
Methyl tert butyl ether	3.61E-04	1.45E-03	3.32E-04
Methylene Chloride	3.00E-03	1.21E-02	2.76E-03
Naphthalene	4.73E-02	1.90E-01	4.34E-02
Phenol	1.65E-04	6.64E-04	1.52E-04
Propionaldehyde	3.92E-03	1.58E-02	3.60E-03
Styrene	2.58E-04	1.04E-03	2.37E-04
Tetrachloroethylene	4.44E-04	1.79E-03	4.08E-04
Toluene	2.48E-03	9.98E-03	2.28E-03
Vinyl Acetate	7.83E-05	3.15E-04	7.19E-05
Xylene	3.82E-04	1.54E-03	3.51E-04
Subtotal of Non-POMs HAPs		*5.07E-01*	*1.16E-01*
Metallic HAPs			
Antimony	2.00E-04	8.05E-04	1.84E-04
Cadmium	5.60E-06	2.25E-05	5.14E-06
Chromium	9.61E-05	3.87E-04	8.83E-05
Cyanide	2.58E-02	1.04E-01	2.37E-02
HCN	2.74E-03	1.10E-02	2.52E-03
Lead	6.70E-05	2.70E-04	6.15E-05
Manganese	7.60E-03	3.06E-02	6.98E-03
Subtotal Metallic HAPs		*1.47E-01*	*3.35E-02*
	Totals	**6.54E-01**	**1.49E-01**

[1] Emission Factors from Ispat Inland HAPs Inventory

Table A3 - R
US STEEL GARY WORKS
CONSTRUCTION PERMIT APPLICATION
NO. 13 BLAST FURNACE RELINE
CALCULATION OF CHANGE IN HAZARDOUS AIR POLLUTANTS
EMISSION RATE FROM COMBUSTION SOURCES
All Additional Hot Metal Through No. 2 Q-BOP

Emission Unit: TBBH Boilers
Emission Location: TBBH Boilers (BFG)

Change in Blast Furnace Gas Consumption (MMSCF/yr)	22,433

Hazardous Air Pollutant	Emission Factor (lb/MMSCF)[1]	Change in HAP Emission Rate	
		(tons/yr)	(lbs/hr)
Non-POM HAPs			
Acetaldehyde	5.88E-03	6.60E-02	1.51E-02
Acetophenone	1.55E-04	1.74E-03	3.97E-04
Acrolein	3.00E-03	3.36E-02	7.68E-03
Benzene	1.34E-02	1.50E-01	3.43E-02
Benzyl Chloride	7.23E-03	8.11E-02	1.85E-02
DEHP	7.54E-04	8.46E-03	1.93E-03
Bromoform	4.02E-04	4.51E-03	1.03E-03
Carbon Disulfide	1.34E-03	1.50E-02	3.43E-03
Carbonyl Sulfide	9.78E-03	1.10E-01	2.50E-02
2-Chloroacetophenone	7.25E-05	8.13E-04	1.86E-04
Chlorobenzene	2.27E-04	2.55E-03	5.81E-04
Chloroform	6.09E-04	6.83E-03	1.56E-03
Cumene	5.48E-05	6.15E-04	1.40E-04
Dimethyl Sulfate	4.96E-04	5.56E-03	1.27E-03
2,4-Dinitrotoluene	3.10E-06	3.48E-05	7.94E-06
Ethylbenzene	9.71E-04	1.09E-02	2.49E-03
Ethyl Chloride	4.34E-04	4.87E-03	1.11E-03
Ethelyne Dibromide	1.22E-05	1.37E-04	3.12E-05
Ethelyne Dichloride	4.13E-04	4.63E-03	1.06E-03
Formaldehyde	2.48E-03	2.78E-02	6.35E-03
Hexane	6.92E-04	7.76E-03	1.77E-03
Isophorone	5.99E-03	6.72E-02	1.53E-02
Methyl Bromide	1.65E-03	1.85E-02	4.23E-03
Methyl Chloride	5.47E-03	6.14E-02	1.40E-02
Methyl Chloroform (1,1,1-Trichloroethane)	1.49E-04	1.67E-03	3.82E-04
Methyl Ethyl Ketone (MEK)	4.03E-03	4.52E-02	1.03E-02
Methylhydrazine	1.76E-03	1.97E-02	4.51E-03
Methyl Methacrylate	2.06E-04	2.31E-03	5.28E-04
Methyl tert butyl ether	3.61E-04	4.05E-03	9.24E-04
Methylene Chloride	3.00E-03	3.36E-02	7.68E-03
Naphthalene	4.73E-02	5.31E-01	1.21E-01
Phenol	1.65E-04	1.85E-03	4.23E-04
Propionaldehyde	3.92E-03	4.40E-02	1.00E-02
Styrene	2.58E-04	2.89E-03	6.61E-04
Tetrachloroethylene	4.44E-04	4.98E-03	1.14E-03
Toluene	2.48E-03	2.78E-02	6.35E-03
Vinyl Acetate	7.83E-05	8.78E-04	2.01E-04
Xylene	3.82E-04	4.28E-03	9.78E-04
Subtotal of Non-POMs HAPs		*1.41E+00*	*3.23E-01*
Metallic HAPs			
Antimony	2.00E-04	2.24E-03	5.12E-04
Cadmium	5.60E-06	6.28E-05	1.43E-05
Chromium	9.61E-05	1.08E-03	2.46E-04
Cyanide	2.58E-02	2.89E-01	6.61E-02
HCN	2.74E-03	3.07E-02	7.02E-03
Lead	6.70E-05	7.52E-04	1.72E-04
Manganese	7.60E-03	8.52E-02	1.95E-02
Subtotal Metallic HAPs		*4.10E-01*	*9.35E-02*
	Totals	1.82E+00	4.16E-01

[1] Emission Factors from Ispat Inland HAPs Inventory

Table A3 -S
US STEEL GARY WORKS
CONSTRUCTION PERMIT APPLICATION
NO. 13 BLAST FURNACE RELINE
CALCULATION OF CHANGE IN HAZARDOUS AIR POLLUTANTS
EMISSION RATE FROM PROCESS SOURCES
All Additional Hot Metal Through No. 2 Q-BOP

Emission Unit: Steel Producing
Emission Location: No. 1 BOP HM Desulfurization Baghouse

Change in PM_{10} Emission Rate (tons/yr)	0.00

Hazardous Air Pollutant	Weight Percent of HAP in Dust	HAP Emission Rate (Based on PM10)	
		(tons/yr)	(lbs/hr)
Antimony	0.001900%	0.00000	0.00000
Arsenic	0.003300%	0.00000	0.00000
Chromium	0.021700%	0.00000	0.00000
Cobalt	0.000390%	0.00000	0.00000
Lead	0.009500%	0.00000	0.00000
Manganese	0.437000%	0.00000	0.00000
Selenium	0.000620%	0.00000	0.00000
	Totals	0.00000	0.00000

file: process.xls (Page ssa)

Table A3 - T
US STEEL GARY WORKS
CONSTRUCTION PERMIT APPLICATION
NO. 13 BLAST FURNACE RELINE
CALCULATION OF CHANGE IN HAZARDOUS AIR POLLUTANTS
EMISSION RATE FROM PROCESS SOURCES
All Additional Hot Metal Through No. 2 Q-BOP

Emission Unit: Steel Producing
Emission Location: No. 1 BOP Gas Cleaner

Change in PM_{10} Emission Rate (tons/yr)	0.00

Hazardous Air Pollutant	Weight Percent of HAP in Sludge	HAP Emission Rate (Based on PM10)	
		(tons/yr)	(lbs/hr)
Antimony	0.001000%	0.00000	0.00000
Arsenic	0.000490%	0.00000	0.00000
Chromium	0.025700%	0.00000	0.00000
Cobalt	0.000200%	0.00000	0.00000
Lead	0.094000%	0.00000	0.00000
Manganese	0.478000%	0.00000	0.00000
	Totals	0.00000	0.00000

file: process.xls (Page ssb)

Table A3 - U
US STEEL GARY WORKS
CONSTRUCTION PERMIT APPLICATION
NO. 13 BLAST FURNACE RELINE
CALCULATION OF CHANGE IN HAZARDOUS AIR POLLUTANTS
EMISSION RATE FROM PROCESS SOURCES
All Additional Hot Metal Through No. 2 Q-BOP

Emission Unit: Steel Producing
Emission Location: No. 1 BOP CAS Bell/OB Lancing Baghouse

Change in PM_{10} Emission Rate (tons/yr)	0.00

Hazardous Air Pollutant	Weight Percent of HAP in Dust	HAP Emission Rate (Based on PM10)	
		(tons/yr)	(lbs/hr)
Antimony	0.000740%	0.00000	0.00000
Arsenic	0.002500%	0.00000	0.00000
Cadmium	0.014200%	0.00000	0.00000
Chromium	0.034800%	0.00000	0.00000
Cobalt	0.000810%	0.00000	0.00000
Lead	0.290000%	0.00000	0.00000
Manganese	2.250000%	0.00000	0.00000
Mercury	0.000017%	0.00000	0.00000
	Totals	0.00000	0.00000

file: process.xls (Page ssc)

Table A3 - V
US STEEL GARY WORKS
CONSTRUCTION PERMIT APPLICATION
NO. 13 BLAST FURNACE RELINE
CALCULATION OF CHANGE IN HAZARDOUS AIR POLLUTANTS
EMISSION RATE FROM PROCESS SOURCES
All Additional Hot Metal Through No. 2 Q-BOP

Emission Unit: Steel Producing
Emission Location: No. 2 Caster Mold Baghouses

Change in PM_{10} Emission Rate (tons/yr)	0.03

Hazardous Air Pollutant	Weight Percent of HAP in Dust	HAP Emission Rate (Based on PM10)	
		(tons/yr)	(lbs/hr)
Antimony	0.000560%	0.00000	0.00000
Arsenic	0.000620%	0.00000	0.00000
Cadmium	0.004380%	0.00000	0.00000
Chromium	0.005170%	0.00000	0.00000
Cobalt	0.002600%	0.00000	0.00000
Lead	0.022000%	0.00001	0.00000
Manganese	0.898000%	0.00024	0.00005
Mercury	0.000028%	0.00000	0.00000
	Totals	0.00024	0.00006

file: process.xls (Page nsa)

Table A3 - W
US STEEL GARY WORKS
CONSTRUCTION PERMIT APPLICATION
NO. 13 BLAST FURNACE RELINE
CALCULATION OF CHANGE IN HAZARDOUS AIR POLLUTANTS
EMISSION RATE FROM PROCESS SOURCES
All Additional Hot Metal Through No. 2 Q-BOP

Emission Unit: Steel Producing
Emission Location: No. 2 QBOP HM Desulfurization Baghouse

Change in PM_{10} Emission Rate (tons/yr)	2.46

Hazardous Air Pollutant	Weight Percent of HAP in Dust	HAP Emission Rate (Based on PM10)	
		(tons/yr)	(lbs/hr)
Antimony	0.001900%	0.00005	0.00001
Arsenic	0.003300%	0.00008	0.00002
Chromium	0.021700%	0.00053	0.00012
Cobalt	0.000390%	0.00001	0.00000
Lead	0.009500%	0.00023	0.00005
Manganese	0.437000%	0.01074	0.00245
Selenium	0.000620%	0.00002	0.00000
	Totals	0.01166	0.00266

file: process.xls (Page nsb)

Table A3 - X
US STEEL GARY WORKS
CONSTRUCTION PERMIT APPLICATION
NO. 13 BLAST FURNACE RELINE
CALCULATION OF CHANGE IN HAZARDOUS AIR POLLUTANTS
EMISSION RATE FROM PROCESS SOURCES
All Additional Hot Metal Through No. 2 Q-BOP

Emission Unit: Steel Producing
Emission Location: No. 2 QBOP Secondary Emissions Baghouse

Change in PM_{10} Emission Rate (tons/yr)	4.73

Hazardous Air Pollutant	Weight Percent of HAP in Dust	HAP Emission Rate (Based on PM10)	
		(tons/yr)	(lbs/hr)
Antimony	0.001200%	0.00006	0.00001
Arsenic	0.000720%	0.00003	0.00001
Cadmium	0.039900%	0.00189	0.00043
Chromium	0.040000%	0.00189	0.00043
Cobalt	0.000760%	0.00004	0.00001
Lead	0.084100%	0.00397	0.00091
Manganese	0.754000%	0.03563	0.00813
Mercury	0.000238%	0.00001	0.00000
	Totals	0.04351	0.00993

file: process.xls (Page nsc)

Table A3 - Y
US STEEL GARY WORKS
CONSTRUCTION PERMIT APPLICATION
NO. 13 BLAST FURNACE RELINE
CALCULATION OF CHANGE IN HAZARDOUS AIR POLLUTANTS
EMISSION RATE FROM PROCESS SOURCES
All Additional Hot Metal Through No. 2 Q-BOP

Emission Unit: Steel Producing
Emission Location: No. 2 QBOP Gas Cleaner

Change in PM_{10} Emission Rate (tons/yr)	39.76

Hazardous Air Pollutant	Weight Percent of HAP in Dust	HAP Emission Rate (Based on PM10)	
		(tons/yr)	(lbs/hr)
Antimony	0.000910%	0.00036	0.00008
Arsenic	0.000790%	0.00031	0.00007
Cadmium	0.001300%	0.00052	0.00012
Chromium	0.016800%	0.00668	0.00152
Lead	0.120000%	0.04771	0.01089
Manganese	0.447000%	0.17771	0.04057
	Totals	0.23329	0.05326

file: process.xls (Page nsd)

Table A3 - Z
US STEEL GARY WORKS
CONSTRUCTION PERMIT APPLICATION
NO. 13 BLAST FURNACE RELINE
CALCULATION OF CHANGE IN HAZARDOUS AIR POLLUTANTS
EMISSION RATE FROM PROCESS SOURCES
All Additional Hot Metal Through No. 2 Q-BOP

Emission Unit: Steel Producing
Emission Location: No. 1 LMF Fume Exhaust Baghouse

Change in PM_{10} Emission Rate (tons/yr)	1.20

Hazardous Air Pollutant	Weight Percent of HAP in Dust	HAP Emission Rate (Based on PM10)	
		(tons/yr)	(lbs/hr)
Antimony	0.002000%	0.00002	0.00001
Arsenic	0.004200%	0.00005	0.00001
Cadmium	0.002560%	0.00003	0.00001
Chromium	0.049000%	0.00059	0.00013
Cobalt	0.001800%	0.00002	0.00000
Manganese	6.690000%	0.08014	0.01830
Mercury	0.000009%	0.00000	0.00000
Nickel	0.020600%	0.00025	0.00006
	Totals	0.08110	0.01852

file: process.xls (Page nse)

Table A3 - AA
US STEEL GARY WORKS
CONSTRUCTION PERMIT APPLICATION
NO. 13 BLAST FURNACE RELINE
CALCULATION OF CHANGE IN HAZARDOUS AIR POLLUTANTS
EMISSION RATE FROM PROCESS SOURCES
All Additional Hot Metal Through No. 2 Q-BOP

Emission Unit: Steel Producing
Emission Location: No. 2 LMF Fume Exhaust Baghouse

Change in PM_{10} Emission Rate (tons/yr)	1.20

Hazardous Air Pollutant	Weight Percent of HAP in Dust	HAP Emission Rate (Based on PM10)	
		(tons/yr)	(lbs/hr)
Antimony	0.002000%	0.00002	0.00001
Arsenic	0.004200%	0.00005	0.00001
Cadmium	0.002560%	0.00003	0.00001
Chromium	0.049000%	0.00059	0.00013
Cobalt	0.001800%	0.00002	0.00000
Manganese	6.690000%	0.08014	0.01830
Mercury	0.000009%	0.00000	0.00000
Nickel	0.020600%	0.00025	0.00006
	Totals	0.08110	0.01852

file: process.xls (Page nsf)

Table A3 - BB
US STEEL GARY WORKS
CONSTRUCTION PERMIT APPLICATION
NO. 13 BLAST FURNACE RELINE
CALCULATION OF CHANGE IN HAZARDOUS AIR POLLUTANTS
EMISSION RATE FROM PROCESS SOURCES
All Additional Hot Metal Through No. 2 Q-BOP

Emission Unit: Steel Producing
Emission Location: No. 3 LMF Fume Exhaust/Mat. Handling Baghouse

Change in PM_{10} Emission Rate (tons/yr)	0.60

Hazardous Air Pollutant	Weight Percent of HAP in Dust	HAP Emission Rate (Based on PM10)	
		(tons/yr)	(lbs/hr)
Antimony	0.002000%	0.00001	0.00000
Arsenic	0.004200%	0.00002	0.00001
Cadmium	0.002560%	0.00002	0.00000
Chromium	0.049000%	0.00029	0.00007
Cobalt	0.001800%	0.00001	0.00000
Manganese	6.690000%	0.03981	0.00909
Mercury	0.000009%	0.00000	0.00000
Nickel	0.020600%	0.00012	0.00003
	Totals	0.04028	0.00920

file: process.xls (Page nsg)