259796

Final Report
Morgantown Ordnance Works, OU-2
Removal Action

Volume II of II (Appendices D - G)

prepared for submission to:

U.S. Environmental Protection Agency
841 Chestnut Street
Philadelphia, Pennsylvania 19107

EPA

prepared on behalf of:

Morgantown Technical Committee

prepared by:

ICF Kaiser Engineers, Inc.
Gateway View Plaza
1600 West Carson Street
Pittsburgh, Pennsylvania 15219-1031

ICF KAISER

August 20, 1997

ORIGINAL
(Red)

D

ORIGINAL
(Red)

APPENDIX D

PHOTO LOG

ORIGINAL
(Red)

PHOTO LOG PROVIDED UNDER SEPARATE COVER

ORIGINAL
(Red)

E

ORIGINAL
(Red)

APPENDIX E

ADMINISTRATIVE CONSENT ORDER

ORIGINAL
(Red)

UNITED STATES ENVIRONMENTAL PROTECTION AGENCY
REGION III
841 Chestnut Building
Philadelphia, Pennsylvania 19107

Office of Regional Counsel

Andrew S. Goldman
Direct Dial (215) 566-2487

RECEIVED AUG 3 0 1996

AUG 2 9 1996

VIA OVERNIGHT MAIL

Jeffrey N. Hurwitz, Esquire
Morgan, Lewis & Bockius
2000 One Logan Square
Philadelphia, PA 19103

Re: Ordnance Works Disposal Areas Site: OU2 Removal Action Consent Order

Dear Jeff:

Enclosed find the final version of the above-referenced consent order for review and signature by your clients (please insert Attachments A and B from the May 3, 1996 signature version). This document implements the changes identified in both my August 22 letter and your August 27 letter.

In your letter of August 19, you indicated that your clients will not sign this document until an agreement is reached on the land use restrictions under negotiation between EPA and the landowners. For the reasons we have previously discussed at length, I encourage you to reconsider this position. We do anticipate receipt of signatures from Morgantown Industrial Park Associates in the near term and will make that consent order available once EPA has executed the document. We have been informed by Choice Insulation, Inc., however, that it leases, but does not own, the remaining non-MIPA parcels within the cleanup area. EPA is currently investigating ownership of these parcels but does not anticipate completing a land use restriction settlement regarding these remaining parcels prior to the time we will require signatures on the instant removal action consent order.

Once your clients have signed this consent order, the document must be approved by EPA management. If you have any additional questions or comments, please contact me at (215) 566-2487.

ORIGINAL
(Red)

Respectfully,

ANDREW S. GOLDMAN
Sr. Assistant Regional Counsel

Enclosure

ORIGINAL
(Red)

UNITED STATES ENVIRONMENTAL PROTECTION AGENCY
REGION III

IN THE MATTER OF:	:	
MORGANTOWN ORDNANCE WORKS DISPOSAL AREAS SITE	:	
E.I. duPont de Nemours & Company; Olin Corporation; and Tenneco Polymers, Inc.,	:	Docket No. III-96-68-DC
RESPONDENTS	:	
Proceeding Under Sections 106(a) and 122(a) of the Comprehensive Environmental Response, Compensation, and Liability Act of 1980, as amended, 42 U.S.C. §§ 9606(a) and 9622(a)	:	

ADMINISTRATIVE ORDER ON CONSENT FOR REMOVAL RESPONSE ACTION/AMENDMENT NO. 1 TO ADMINISTRATIVE ORDER ON CONSENT NO. III-90-16-DC

The parties to this Administrative Order on Consent ("Consent Order"), E. I. duPont de Nemours & Company ("DuPont"), Olin Corporation ("Olin"), and Tenneco Polymers, Inc. ("Tenneco") (collectively referred to hereinafter as "Respondents"), and the United States Environmental Protection Agency ("EPA"), having agreed to the entry of this Consent Order, it is therefore Ordered, that:

I. JURISDICTION AND GENERAL PROVISIONS

1.1 This Consent Order is issued pursuant to the authority vested in the President of the United States by sections 106(a) and 122(a) of the Comprehensive Environmental Response, Compensation, and Liability Act of 1980, as amended ("CERCLA"), 42 U.S.C. §§ 9606(a) and 9622(a); delegated to the Administrator of EPA by Executive Order No. 12580, 52 Fed. Reg. 2923 (January 29, 1987); and further delegated to the Regional Administrators of EPA. This Consent Order pertains to Operable Unit No. 2 ("OU2") within a property known to EPA as the Ordnance Works Disposal Areas Site in Morgantown, Monongalia County, West Virginia ("Site"), which operable unit was investigated by the Respondents pursuant to an Administrative Order on Consent signed by EPA on June 4, 1990 (EPA Docket No. III-90-16-DC). A more detailed description of the Site, including OU2, is provided in Section III of this Consent Order.

1.2 Respondents agree to undertake all actions required by, and comply with all requirements of, this Consent Order including any modifications hereto (the "Work").

1.3 The Work shall be consistent with the National Oil and Hazardous Substances Pollution Contingency Plan, as amended ("NCP"), 40 C.F.R. Part 300; and CERCLA.

1.4 The Respondents consent to and will not contest EPA's authority or jurisdiction to issue or to enforce this Consent Order.

II. STATEMENT OF PURPOSE

2.1 In entering into this Consent Order, the mutual objectives of EPA and Respondents are to conduct a removal action, as defined in section 101(23) of CERCLA, 42 U.S.C. § 9601(23), to abate, mitigate, and/or eliminate the release or threat of release of hazardous substances at OU2 (as hereinafter described) by preventing the migration of hazardous substances by removing/disposing of hazardous substances from OU2.

III. FINDINGS OF FACT

EPA makes the following findings of fact:

3.1 The Ordnance Works Disposal Areas Site ("Site") is located in Monongalia County on the west bank of the Monongahela River approximately one mile south of the City of Morgantown, West Virginia ("Morgantown") (see Attachment A to this Consent Order). The Site consists of numerous tracts of land containing approximately 800 acres purchased by Respondent DuPont between 1940-1943 pursuant to agreements between Respondent DuPont and the United States of America (as further described in Section 3.3 of this Consent Order). These agreements additionally provided for the construction and operation of manufacturing facilities. A small portion of this land was used as a disposal ground during operations and later became known to EPA as Operable Unit No. 1 of the Site. The remaining portion of the Site containing, among other things, the manufacturing facilities and undeveloped areas, is known to EPA as Operable Unit No. 2 of the Site.

3.2 Operable Unit No. 2 has contained active chemical production facilities since the 1940's. Between 1943 and 1962, the United States held legal title to these facilities. Between 1941 and 1958, various operations were conducted by private parties, in some cases pursuant to government contracts and operating agreements, and in other cases pursuant to

commercial leases. During this time, the facilities were used to produce, among other substances, hexamine, ammonia, methyl alcohol, formaldehyde, ethylene diamine, and coke. As a result of manufacturing operations conducted by others under agreements and leases with the United States, hazardous substances were generated and subsequently disposed at the Site.

3.3 Pursuant to various agreements and contracts with the United States, Respondent DuPont acquired legal title to the Site in stages beginning in October 1940, and proceeded to construct and operate chemical production facilities at OU2 for the war effort between October 1940 and 1945. Under those agreements and contracts, Respondent DuPont transferred legal title to the Site to the United States in December 1943. Between approximately 1940-1945, Respondent DuPont operated manufacturing facilities at OU2 which produced, among other substances, ammonia, methanol, formaldehyde, hexamine, ethylene diamine, light oils, and tars.

3.4 Between approximately January 1951 and May 1958, Respondent Olin operated manufacturing facilities at OU2 which produced, among other substances, methanol, formaldehyde, ethylene diamine, hexamine, ammonia, light oils, and tars.

3.5 Between approximately October 1946 and May 1950, Heyden Chemical Corporation operated the ammonia manufacturing plant at OU2. Respondent Tenneco has agreed to perform the work specified in this Consent Order on behalf of Heyden Chemical Corporation.

3.6 As a result of the above-described operations, waste streams were generated and disposed of at OU1 of the Site. Those waste streams contained hazardous substances.

3.7 Between 1962 and 1978, the Site was owned by Morgantown Ordnance Works, Inc. During that time, Morgantown Ordnance Works, Inc. leased and/or sold portions of OU2 for various industrial and chemical manufacturing activities. In 1964, Weston Chemical Company ("Weston") purchased a small parcel within OU2 from Morgantown Ordnance Works, Inc. Weston subsequently expanded its operations within OU2. This expansion continued after 1969, when Borg-Warner Corporation ("Borg-Warner") purchased Weston, with the result that Borg-Warner ultimately operated two plants and laboratories on company-owned property amounting to approximately 62 acres within OU2. In 1988, General Electric Company ("GE") purchased Borg-Warner's operations at OU2. The GE facilities are currently active.

ORIGINAL
Red

3.8 Except for parcels previously sold, the Site was acquired by Princess Coals, Inc. in 1978. This company did not actively lease or operate the on-site facilities.

3.9 In 1982, the Site was purchased by private individuals who later formed Morgantown Industrial Park, Inc. In 1983, the property was conveyed to Morgantown Industrial Park Associates, Limited Partnership ("MIPA"), the current property owner.

3.10 In April 1983, EPA performed a site inspection at OU1 of the Site. The OU1 area was believed to be a former waste disposal and handling area used by the former tenants of industrial facilities located in OU2 of the Site. The OU1 areas investigated included a former landfill, waste lagoons, a "scraped" area, and a drum staging area. The inspection revealed several drums containing polychlorinated biphenyls ("PCBs"); sediments collected from the scraped and landfill areas containing polynuclear aromatic hydrocarbons ("PAHs") at concentrations exceeding 100 ppm; blue pellets collected from the surface of the former landfill containing zinc and copper; and a yellow solid material collected from the scraped area that contained sulphur. Air monitoring results provided no indication of OU1-related airborne hazardous substances.

3.11 Between May and June 1984, MSES Consultants, Inc. ("MSES"), under contract to MIPA, performed additional sampling of all drums and subsequently disposed of most of the drums at an approved off-site facility.

3.12 In July 1984, EPA performed follow-up sampling to determine the effectiveness of the MIPA response work. Soils in the former drum staging area were found to contain concentrations of PCBs between 6 and 229 ppm; surface soils collected from the landfill and scraped areas and sediments collected adjacent to these areas contained PAHs at concentrations exceeding 700 ppm and 250 ppm, respectively; and inorganic substances such as arsenic, lead, nickel, zinc, chromium, copper, and mercury were identified in concentrations exceeding background levels in surface soils collected from the landfill and scraped areas.

3.13 In October 1984, MIPA removed PCB-contaminated soils from the former drum staging area and disposed of these soils at a licensed off-site facility.

3.14 Operable Unit No. 1 of the Site was promulgated to the CERCLA National Priorities List ("NPL") on June 6, 1986.

3.15 In March 1985, EPA initiated a Remedial Investigation and Feasibility Study ("RI/FS") which focused primarily on

contamination within OU1. During this RI/FS, surface soil and water samples were also collected and analyzed from various locations in and around the complex of process buildings located within OU2 of the Site.

3.16 The OU1 RI/FS report, issued in January 1988, documented the presence of hazardous substances, pollutants, and/or contaminants in the landfill, scraped area, and former lagoon areas within OU1. The report additionally indicated that copper, lead, and mercury were detected above background concentrations in a majority of sampling locations within OU2, and that the concentration of mercury found within OU2 exceeded the OU1 risk-based cleanup level at one sampling location.

3.17 The discovery of releases and threatened releases of hazardous substances at those locations within OU2 sampled during the OU1 RI/FS caused EPA to suspect that there may be additional releases and/or threatened releases of hazardous substances, pollutants, and/or contaminants into the environment from the OU2 area.

3.18 On September 29, 1989, EPA issued a Record of Decision selecting a "preferred" and "contingency" remedial action for OU1 of the Site. The "preferred" remedial action involved, among other things, excavation and treatment of inorganic hotspots from the lagoon and scraped areas; disposal of treated inorganic contaminants at the former landfill area; capping the former landfill; and excavation and treatment of organics-contaminated soils and sediments using bioremediation. The "contingency" remedial action calls for treatment of soils and sediments using soil washing technology. EPA directed Respondent Olin Corporation and Rockwell International Corporation, General Electric Company, and Morgantown Industrial Park Associates to implement this Record of Decision in an administrative order issued by EPA on June 20, 1990 (EPA Docket No. III-90-27-DC).

3.19 EPA and the Respondents entered into an <u>Administrative Order on Consent</u> signed by EPA on June 4, 1990 (EPA Docket No. III-90-16-DC) for performance of an RI/FS at OU2 of the Site. The OU2 RI/FS field work was conducted between January and May 1995. For the purposes of the OU2 RI, OU2 was divided into the following nine investigation areas: the storage yard, the former PCB drum staging area, the oil storage area, the shops area, the coke ovens and by-products area, the organics processing area, main process building area, the gas processing area, and the coal residue disposal area (see Attachment B of this Consent Order).

3.20 The OU2 RI report, issued in November 1995, identified a number of areas within OU2 where elevated levels of hazardous

substances exceed removal action levels. The analytical data from the RI identified a number of hot spots, the following of which are the most significant:

(a) Sediment samples from the crane alley in the main process building area contained levels of PCBs up to 8,480 ppm and levels of lead up to 2,400 ppm;

(b) Surface soil samples in the main process building area contained levels of lead up to 4,150 ppm;

(c) Samples from blue-stained soil in the coke ovens and by-products area contained levels of mercury up to 990 ppm and total PAHs up to 786 ppm; and

(d) Samples of sediment from a sump beside the quenching tower in the coke ovens and by-products area contained total PAHs up to 4,947 ppm (including Benzo(a)pyrene at 170 ppm).

3.21 The presence of elevated levels of PCBs, lead, PAHs, and mercury within OU2 creates the potential for direct contact to any person or animal that comes in close proximity to OU2. Operable Unit No. 2 contains an active industrial park. Access is not completely restricted. Employees, customers, and trespassers may come in contact with soils containing elevated levels of PCBs, lead, PAHs, and/or mercury.

3.22 PCBs, lead, mercury, and PAHs are "hazardous substances" within the meaning of section 101(14) of CERCLA, 42 U.S.C. § 9601(14), and are identified as hazardous substances at 40 C.F.R. § 302.4.

IV. CONCLUSIONS OF LAW

Based on the foregoing Findings of Fact, EPA makes the following Conclusions of Law:

4.1 The Site, including OU2, is a "facility" as defined in section 101(9) of CERCLA, 42 U.S.C. § 9601(9).

4.2 The Respondents are "persons" as defined in section 101(21) of CERCLA, 42 U.S.C. § 9601(21).

4.3 PCBs, lead, mercury, and PAHs are "hazardous substances" within the meaning of section 101(14) of CERCLA, 42 U.S.C. § 9601(14), because they are listed at 40 C.F.R. § 302.4.

4.4 "Hazardous substances," as defined in section 101(14) of CERCLA, 42 U.S.C. § 9601(14), have been disposed of at OU2 and are currently present there.

4.5 The presence of hazardous substances at OU2 and the past, present, and/or potential migration of hazardous substances from OU2 constitutes an actual and/or threatened "release" as defined in section 101(22) of CERCLA, 42 U.S.C. § 9601(22).

4.6 EPA has determined that the Respondents are liable under section 107(a) of CERCLA, 42 U.S.C. § 9607(a).

V. DETERMINATIONS

Based on the Findings of Fact and Conclusions of Law set forth above, EPA has determined that:

5.1 The actual and/or threatened release of hazardous substances from OU2 may present an imminent and substantial endangerment to the public health or welfare or the environment.

5.2 The Work is necessary to protect the public health and welfare and the environment.

5.3 Because there is a threat to public health or welfare or the environment, a removal action is appropriate to abate, prevent, minimize, stabilize, mitigate, or eliminate the release or threat of release of hazardous substances at or from OU2.

5.4 The Work required by this Consent Order is consistent with the National Oil and Hazardous Substances Pollution Contingency Plan, 40 C.F.R. Part 300, and CERCLA.

5.5 EPA has considered the past uses, and likely future uses, of certain areas identified in the OU2 RI and determines that the Work required by this Consent Order will protect the public health and welfare and the environment so long as such areas are not used for residential or like purposes. EPA intends to seek deed restrictions from the owners of such property to ensure continued protection of the public health and welfare and the environment.

VI. PARTIES BOUND

6.1 This Consent Order shall apply to and be binding upon EPA and its agents, and upon the Respondents and their agents, successors, and assigns. Neither a change in ownership or corporate or partnership status of any Respondent, nor a

change in ownership or control of OU2, shall in any way alter the Respondents' responsibilities under this Consent Order.

6.2 In the event that any Respondent files for or is placed into bankruptcy, such Respondent shall notify EPA within three (3) days of such an event.

6.3 The Respondents shall provide a copy of this Consent Order to all contractors, subcontractors, supervisory personnel, laboratories, and consultants retained by the Respondents to conduct any portion of the Work to be performed by the Respondents pursuant to this Consent Order. The Respondents shall require in any and all contracts related to this Site that the Work that is the subject of such contract be performed within the time and in the manner set forth in this Consent Order.

6.4 The undersigned representative of each Respondent certifies that he or she is fully authorized to enter into the terms of this Consent Order and to execute and legally bind such Respondent to this Consent Order.

6.5 The Respondents are jointly and severally liable for compliance with the provisions of this Consent Order. All references to "Respondents" herein shall mean each and every Respondent, both collectively and individually. The failure by one or more of the Respondents to comply with all or any part of this Consent Order shall not in any way excuse or justify noncompliance by any other Respondent. Furthermore, the compliance by one or more of the Respondents with all or part of this Consent Order shall not in any way excuse or justify noncompliance by any other Respondent.

VII. NOTICE TO THE STATE

7.1 Notice of issuance of this Consent Order has been given to the State of West Virginia pursuant to section 106(a) of CERCLA, 42 U.S.C. § 9606(a).

VIII. RESPONSE ACTION PLAN DEVELOPMENT AND IMPLEMENTATION

8.1 The Respondents shall commence and complete performance of the following response action within the time periods specified herein.

8.2 Within five (5) business days after the effective date of this Consent Order, the Respondents shall notify EPA in writing of the identity and qualifications of the contractor, subcon-

tractor, supervisory personnel, and other persons who will be primarily responsible for developing the Response Action Plan ("RAP") required by this Section. The Respondents shall further notify EPA in writing of the identity and qualifications of all contractors, subcontractors, supervisory personnel, and other persons selected by the Respondents who will conduct all or any portion of the response action no less than five (5) days prior to commencement of the response action to be performed by such persons. The Respondents shall ensure that all contractors, subcontractors, supervisory personnel, and other persons retained to perform the response action shall meet the applicable Occupational Safety and Health Administration ("OSHA") requirements as defined in 29 C.F.R. § 1910.120. The Respondents' selection of all contractors, subcontractors, supervisory personnel, and other persons who will perform the response action; the Respondents' Project Coordinator designated pursuant to Section IX; and any replacements to any such persons are subject to disapproval by EPA at any time. In the event of any such disapproval by EPA, the Respondents shall notify EPA within ten (10) calendar days of receipt of such EPA disapproval of the person(s) who will replace the one(s) whose selection was disapproved by EPA. If a person's selection for specified work is disapproved by EPA, they shall not perform such work.

8.3 The Respondents shall accomplish the following items in accordance with an EPA-approved plan:

(a) Develop and submit for EPA approval an extent of contamination study work plan which characterizes the concentration and depth of lead and PCB contamination in the soils of the floor of the crane alley in the main process building area ("crane alley");

(b) Implement the EPA-approved extent of contamination study described above in (a);

(c) Remove and properly dispose or treat all soils contaminated with lead in excess of 1,000 ppm and PCBs in excess of 25 ppm from the dirt floor of the crane alley as identified in the study described in (a) above;

(d) Remove and properly dispose or treat all debris, standing water, and sediment from the reportedly lined sump/trench that runs the length of the crane alley (if this sump/trench is not lined, all sediment contaminated with lead in excess of 1,000 ppm and PCBs in excess of 25 ppm shall be removed and properly disposed of or treated);

(e) Backfill the sump/trench that runs the length of the crane alley and vegetate both the area above the backfilled sump/trench and the crane alley itself;

(f) Propose a method for EPA approval for sealing the three subgrade utility corridors ("Corridors") outside the former coke ovens in the coke ovens and by-products area;

(g) Implement the EPA-approved sealing method described in (h) above;

(h) Remove and properly dispose of or treat all debris, standing water, and sediment from the exterior of the concrete-lined Corridors;

(i) Backfill and vegetate the exterior of the Corridors to eliminate the existing physical hazard;

(j) Remove and properly dispose of or treat all debris, standing water, and sediment from the concrete-lined pit on the southeast side of the quench tower in the coke ovens and by-products area;

(k) Backfill and vegetate the pit on the southeast side of the quench tower in the coke ovens and by-products area to eliminate the existing physical hazard;

(l) Remove and properly dispose of or treat all debris, standing water, and sediment from all remaining sumps and pits in the coke ovens and by-products area;

(m) Backfill and vegetate all remaining sumps and pits in the coke ovens and by-products area to eliminate the existing physical hazard;

(n) Remove and properly dispose or treat all visibly contaminated blue-stained soil areas in the coke ovens and by-products area;

(o) Excavate and properly dispose or treat soils/sediments from the Main Process Building Area which were identified in the OU2 RI to be contaminated with lead in excess of 1,000 ppm;

(p) Contain (in a manner that will eliminate risks presented by contact with hazardous substances) or excavate and properly dispose of soils from the Coke Ovens and Byproducts Area which were identified in the OU2 RI to be contaminated with total carcinogenic PAHs ("CPAHs") in excess of 78 ppm. If proposed by Respondents, EPA will

ORIGINAL
filed

evaluate the use of a soil cover and revegetation to satisfy this requirement;

(q) Operate and maintain any containment system implemented pursuant to paragraph (p), above;

(r) Excavate and properly dispose of soils/sediments specifically identified in the OU2 RI and not otherwise described in this Section 8.3 that are contaminated with one or more of the following:

(1) lead in excess of 1,000 ppm

(2) PCBs in excess of 25 ppm

(3) total CPAHs in excess of 78 ppm

(4) mercury in excess of 610 ppm.

This Section 8.3(r) does not impose any sampling, excavation, disposal, or other removal obligations at any locations other than those identified in the OU2 RI as contaminated above these levels.

(s) After completion of the work described in Sections 8.3(c), (d), (n), (o), (p), and (r) of this Consent Order, conduct confirmatory post-excavation sampling to ensure that contamination levels in soils/sediments are below 1,000 ppm lead, 610 ppm mercury, 25 ppm PCBs, and 78 ppm total CPAHs.

(t) Transport all hazardous substances designated for off-site disposal to an EPA-approved disposal facility in accordance with U.S. Department of Transportation requirements, and assure their proper disposal in accordance with applicable laws and regulations;

(u) Treat and/or remove and properly dispose of contaminated water generated as a result of the above items (e.g., equipment and sampling-related fluids) in accordance with applicable laws and regulations;

(v) Provide OU2-specific health and safety measures, including preparation and implementation of a Health and Safety Plan ("HASP") for actions to be performed at OU2, to protect the health and safety of workers, other personnel, and the public from the hazardous substances and work-related health and safety hazards during performance of the response action specified herein. The HASP shall, as appropriate, provide for proper decontamination of personnel and equipment, monitoring

and control of off-site migration of hazardous substances during the performance of activities at OU2, and protection of public health from exposure to hazardous substances during the conduct of activities at OU2 pursuant to this Consent Order. Health and safety requirements in the HASP shall be at least as stringent as those set forth in Occupational Safety and Health Administration and EPA requirements including, but not limited to, requirements contained in 29 C.F.R. § 1910.120 and/or EPA Standard Operating Safety Guides (July 5, 1988); and

(w) Obtain a Hazardous Waste Generator Identification Number.

8.4 Within fifteen (15) business days after the effective date of this Consent Order, the Respondents shall submit to EPA for approval a Response Action Plan ("RAP") detailing the response action to be implemented for the items specified in Section 8.3 of this Consent Order. To the extent that information concerning the details of a particular item does not yet exist so that it can be described in the RAP, the RAP shall set forth an expeditious schedule and plan for submittal of RAP supplement(s) to EPA for approval, which supplement(s) shall fully detail such items. All references to the review, approval, and enforcement of the RAP shall also be applicable to any RAP supplement(s). The RAP shall include, among other things, a schedule for expeditious performance of the response actions required by this Consent Order. The RAP shall be consistent with the NCP and shall be subject to approval by EPA according to the provisions of Sections 8.5 and 8.9 of this Consent Order.

8.5 EPA will review the RAP and notify the Respondents of EPA's approval or disapproval of the RAP. In the event of disapproval, EPA will specify the deficiencies in writing. The Respondents shall respond to and correct the deficiencies identified by EPA and resubmit the RAP to EPA within ten (10) business days of receipt of EPA disapproval, or such longer time as may be specified in writing by EPA in its discretion. Exercise of EPA's discretion with respect to such period shall not be subject to the dispute resolution procedures set forth in Section XII of this Consent Order. Approval, disapproval, and/or modification by EPA of the subsequent RAP submission shall be according to the provisions of Section 8.9 of this Consent Order.

8.6 Within five (5) business days of receipt from EPA of written approval to proceed with implementation of the EPA-approved RAP ("written approval to proceed"), the Respondents shall commence implementation of such RAP and complete it in accordance with the RAP and the schedule therein. In the

event EPA determines that any portion of the response action performed is deficient, and EPA requires the Respondents to correct or re-perform such portion of the response action pursuant to this Consent Order, the Respondents shall correct or re-perform such response action or portion of the response action in accordance with a schedule provided by EPA.

8.7 Beginning fourteen (14) calendar days subsequent to the date of receipt of EPA approval of the RAP, and every fourteen (14) calendar days thereafter, or such longer interval as may be determined in writing by the EPA Project Coordinator designated pursuant to Section IX, and until EPA advises the Respondents that the Work is complete, the Respondents shall provide EPA with a progress report for each preceding fourteen (14) day period or, if applicable, the period specified in writing by the EPA Project Coordinator. The progress reports shall include, at a minimum:

(a) a description of the response action completed and the actions that have been taken toward achieving compliance with this Consent Order;

(b) a description of all data anticipated and activities scheduled for the next fourteen (14) calendar days or, if applicable, the period specified in writing by the EPA Project Coordinator;

(c) a description of any problems encountered or anticipated, any actions taken to prevent or mitigate such problems, and a schedule for completion of such actions;

(d) copies of all analytical data received during the reporting period; and

(e) all modifications to the response action, RAP, and schedule made in accordance with Section XIV of this Consent Order during the reporting period.

8.8 Documents, including plans, reports, sampling results, and other correspondence to be submitted pursuant to this Consent Order, shall be sent by certified or overnight mail to the EPA Project Coordinator designated pursuant to Section IX of this Consent Order.

8.9 All reports, plans, specifications, schedules, and attachments required by this Consent Order are subject to EPA approval and shall be deemed incorporated into this Consent Order upon approval by EPA. In the event that EPA approves a portion of the RAP, report, or other item required to be submitted under this Consent Order, the approved portion shall be enforceable under this Consent Order. In the event of conflict between

this Consent Order and any document attached hereto, incorporated in, or enforceable hereunder, the provisions of this Consent Order shall control. In the event that EPA disapproves any required submission, EPA will specify the deficiencies in writing to the Respondents. The Respondents shall amend and submit to EPA a revised submission that responds to and corrects the specified deficiencies within ten (10) business days of receipt of EPA disapproval, or such longer time as may be specified by EPA in its discretion. Exercise of EPA's discretion with respect to such period shall not be subject to the dispute resolution procedures set forth in Section XII of this Consent Order. If, after review of such revision, EPA continues to disapprove of the submission, EPA may submit its own modifications to the Respondents. In the event that EPA submits its own modifications to the Respondents, the Respondents are hereby required to incorporate such modifications. Any non-compliance with EPA-approved reports, plans, specifications, schedules, attachments, or submission of deficient revisions following EPA disapproval, or non-compliance with an EPA-required modification shall be considered a failure to comply with a requirement of this Consent Order. Determination(s) of non-compliance will be made by EPA.

8.10 In addition to the information and documents otherwise required by this Consent Order, and subject to Section 11.5 of this Consent Order pertaining to privileged or protected records and documents, the Respondents shall provide to EPA, upon written request, any and all information and documents in their possession, custody, or control related to OU2 including, but not limited to, analytical data (including raw data); safety data; monitoring data; operational logs; copies of all hazardous waste manifests (including copies of all hazardous waste manifests signed upon receipt of the hazardous wastes by a licensed treatment, storage, or disposal facility); the identity of treatment, storage, and/or disposal facilities used; the identity of transporters used; the identity of any contractors, subcontractors, and supervisory personnel used; information and documents concerning the Respondents' compliance with Quality Assurance and Quality Control requirements of this Consent Order; information and documents relating to the Respondents' efforts to secure access; and information and documents relating to any project delays. Nothing herein shall be interpreted as limiting the inspection and information-gathering authority of EPA under Federal law.

8.11 Within twenty (20) business days of the date the Respondents conclude they have completed implementation of the RAP and the items identified in Section 8.3 of this Consent Order, the Respondents shall submit a written Final Report to EPA,

ORIGINAL
(Red)

subject to EPA approval described in Section 8.9 of this Consent Order. The Final Report shall detail the work undertaken to implement the RAP and the items identified in Section 8.3 of this Consent Order, and shall be certified by the Respondents in accordance with the terms of Section XXII of this Consent Order. EPA will review the adequacy of the Respondents' implementation of the RAP and accomplishment of items specified in Section 8.3 of this Consent Order. EPA will notify the Respondents, in writing, of any discrepancies in the Final Report or deficiencies in the execution of the RAP and the items identified in Section 8.3 of this Consent Order and the actions required to correct such discrepancies or deficiencies. Within ten (10) business days of receipt of notification by EPA, or as otherwise specified by EPA, the Respondents shall, as directed by EPA, amend the Final Report, develop an additional plan or amend the existing RAP to address such discrepancies or deficiencies. Any additional plan or amendment to the RAP will be subject to the approval procedures outlined in Sections 8.5 and 8.9 of this Consent Order. The Respondents shall perform all actions approved by EPA in a manner consistent with the NCP and all applicable Federal laws and regulations, as required by the NCP.

8.12 The Respondents shall not handle or remove any hazardous substances from OU2 except in conformance with the terms of this Consent Order and all applicable Federal, State, and local laws and regulations, as required by the NCP. Any off-Site transfer of hazardous substances, pollutants, or contaminants undertaken to comply with this Consent Order shall meet the requirements of 40 C.F.R. § 300.440 and shall be performed in accordance with any rule or regulation promulgated pursuant to Section 121(d)(3) of CERCLA, 42 U.S.C. § 9621(d)(3).

8.13 The Respondents shall not commence any Work except in conformance with the terms of this Consent Order. The Respondents shall not commence implementation of the RAP developed hereunder until receiving written EPA approval to proceed pursuant to Section 8.6 of this Consent Order.

8.14 The Respondents shall immediately notify EPA's Project Coordinator and the National Response Center [(800) 424-8802] and any other party required by law in the event of any action or occurrence during the pendency of this Consent Order which causes or threatens to cause an additional release of hazardous substances, pollutants, or contaminants on, at, or from OU2, or which may create a danger to public health or welfare or to the environment.

8.15 In the event that EPA believes that response action or other activities at OU2 by the Respondents are causing or may cause

a release or potential release of hazardous substances, or are a threat to public health or welfare or to the environment, EPA may, in its discretion, immediately halt or modify such response actions or other activities to eliminate or mitigate such actual or potential releases or threats.

IX. DESIGNATED PROJECT COORDINATORS

9.1 The Respondents shall designate a Project Coordinator and shall notify EPA of such designation no later than five (5) calendar days after the effective date of this Consent Order. Designation of a Project Coordinator shall not relieve Respondents of their obligation to comply with the requirements of this Consent Order. The Respondents' Project Coordinator shall be a technical and/or managerial representative of the Respondents and may be a contractor and/or consultant; provided, however, the Respondents' Project Coordinator shall not be their legal representative(s) in this matter. The Project Coordinator for EPA designated pursuant to this Section and the Project Coordinator for the Respondents shall be responsible for overseeing the Work. To the maximum extent possible, communications between the Respondents and EPA and all documents concerning the activities performed pursuant to the terms and conditions of this Consent Order, including plans, reports, approvals and other correspondence, shall be directed to the Project Coordinators.

9.2 The Project Coordinator for EPA is:

Melissa Whittington (3HW23)
Remedial Project Manager
U.S. Environmental Protection Agency
General Remedial Section
841 Chestnut Building
Philadelphia, PA 19107
(215) 597-1286

9.3 The Respondents shall have the right to change their Project Coordinator. Such a change shall be accomplished by notifying the EPA Project Coordinator in writing at least five (5) calendar days prior to the change.

9.4 EPA shall have the right to change its Project Coordinator at any time without prior notice to the Respondents. EPA's intent is to notify the Respondents as soon as practicable following any such change of its Project Coordinator.

9.5 The absence of the EPA Project Coordinator from OU2 shall not be cause for the stoppage or delay of Work except when such stoppage or delay is specifically required by EPA.

9.6 The EPA Project Coordinator shall have the authority to halt or modify Work or other activities performed by the Respondents at OU2 in order to eliminate a release or threat of release of hazardous substances. Such direction by the EPA Project Coordinator may be given verbally or in writing. If such direction is given verbally, the EPA Project Coordinator will later memorialize such direction in writing.

X. QUALITY ASSURANCE

10.1 The Respondents shall use quality assurance, quality control, and chain of custody procedures in accordance with the following documents while conducting all sample collection and analysis activities required by this Consent Order:

(a) "EPA NEIC Policies and Procedures Manual" (EPA Document 330/9-78-001-R (revised November 1984));

(b) "Interim Guidelines and Specifications for Preparing Quality Assurance Project Plans," (QAMS-005/80 (December 1980)); and

(c) "QA/QC Guidance for Removal Activities," (EPA/540/G-90/004 (April 1990)).

10.2 The Respondents shall consult with EPA in planning for, and prior to, all sampling and analysis required by the approved RAP. The Respondents shall use a laboratory(s) which has a documented Quality Assurance Program that complies with EPA guidance document QAMS-005/80.

XI. ACCESS

11.1 As of the effective date of this Consent Order, the Respondents shall provide to each other and to EPA and its employees, agents, consultants, contractors, and other authorized and/or designated representatives, for the purposes of conducting and/or overseeing the Work, access to all property owned or controlled by the Respondents wherein Work must be undertaken. Such access shall permit EPA and its employees, agents, consultants, contractors, and other authorized and designated representatives to conduct all activities described in Section 11.3 of this Consent Order.

11.2 The Respondents shall use their best efforts to obtain access agreements from the present owner(s). Such access agreements shall be finalized as soon as practicable but no later than fourteen (14) calendar days after receiving EPA's written approval to proceed. Such agreements shall provide reasonable access for the Respondents and their employees, agents, consultants, contractors, and other authorized and designated representatives to conduct the Work, and for EPA and its designated representatives to conduct the activities outlined in Section 11.3 of this Consent Order. In the event that the property owner refuses to provide access or access agreements are not obtained within the time designated above, whichever occurs sooner, the Respondents shall notify EPA at that time, in writing, of all efforts to obtain access and the circumstances of the failure to obtain access. EPA may then take steps to provide access. The Respondents shall reimburse the United States for all costs incurred in obtaining access which are not inconsistent with the NCP.

11.3 In accordance with law and regulation, as appropriate, EPA and its employees, agents, contractors, consultants, and other authorized and designated representatives shall have the authority to enter and freely move about the location where the response actions and/or Work is being performed at all reasonable times for the purposes of, among other things, inspecting Work, records, operating logs and contracts related to OU2; reviewing the progress of the Respondents in carrying out the terms of this Consent Order; conducting such tests as EPA deems necessary; using a camera, sound recording, or other documentary-type equipment; and verifying the data submitted to EPA by the Respondents. Subject to Section 11.5 of this Consent Order pertaining to privileged or protected records and documents, the Respondents shall permit such persons to inspect and copy all records, files, photographs, documents, and other writings, including all sampling and monitoring data, in any way pertaining to the Work.

11.4 The Respondents may make a claim of business confidentiality for information submitted pursuant to this Consent Order in the manner described in 40 C.F.R. § 2.203(b). Such an assertion shall be adequately substantiated in accordance with 40 C.F.R. § 2.204(e)(4) at the time the assertion is made. Information subject to a confidentiality claim shall be made available to the public by EPA only in accordance with the procedures set forth in 40 C.F.R. Part 2, Subpart B. If no such claim of business confidentiality accompanies the information when it is submitted or made available to EPA, the submitted information may be made available to the public by EPA without further notice to the Respondents.

11.5 The Respondents may withhold those records and documents covered by any privilege or protection recognized under federal law and applied by federal courts in actions commenced by the United States. In the event that the Respondents withhold a document as privileged, the Respondents shall provide EPA with the title of the document, the date of the document, the name(s) of the author(s) and addressee(s)/ recipient(s), a description of the nature of the document, and identification of the privilege asserted at the time such document is required to be provided to EPA.

11.6 No claim of confidentiality or privilege shall be made regarding any data required to be submitted pursuant to this Consent Order including, but not limited to, sampling, analytical, monitoring, hydrogeologic, scientific, chemical, or engineering data, or documents or information evidencing conditions at or around OU2. Nor shall such claims be made for analytical data; Site safety data; Site monitoring data; operational logs; hazardous waste manifests; the identity of treatment, storage, and/or disposal facilities used; the identity of transporters used; or the identity of any contractors or subcontractors used in performing work required by this Consent Order.

11.7 Notwithstanding any provision of this Consent Order, EPA retains all of its access and information-gathering authorities and rights under CERCLA and any other applicable statute and regulation.

XII. DISPUTE RESOLUTION

12.1 Except as specifically provided elsewhere in this Consent Order, if the Respondents object to any EPA notification of deficiency, disapproval, or other EPA action taken pursuant to this Consent Order, including billings for oversight costs, the Respondents shall notify EPA in writing of their objection(s) within fourteen (14) calendar days of receipt of such notification or action.

12.2 EPA and the Respondents shall have fourteen (14) calendar days from the receipt by EPA of the notification of objection to reach agreement. EPA may, in its sole discretion which shall not be subject to dispute resolution, extend this period up to fourteen (14) additional calendar days. If agreement cannot be reached on any issue within this fourteen (14) or twenty-eight (28) day period, EPA will provide a written statement of its decision to the Respondents. The Respondents' obligations under this Consent Order shall not be tolled by submission of any objection for dispute resolution under this Section XII.

12.3 In order to prevail in any dispute regarding oversight costs, the Respondents must demonstrate that a mathematical error was made or that the costs were incurred in a manner inconsistent with the NCP.

12.4 Following resolution of the dispute, as provided by this Section XII, the Respondents shall perform the Work that was the subject of the dispute in accordance with the agreement reached or EPA's decision. To the extent that the Respondents do not prevail upon resolution of any dispute involving contested costs, the Respondents shall remit to EPA, within fourteen (14) calendar days of receipt of such resolution, all outstanding oversight costs determined to be owed to EPA, including any accrued interest, as specified in Section 13.1 of this Consent Order.

12.5 Notwithstanding any other provision of this Consent Order, no action or decision by EPA pursuant to this Consent Order shall give rise to any right to judicial review except as set forth in section 113(h) of CERCLA, 42 U.S.C. § 9613(h).

XIII. DELAY IN PERFORMANCE AND STIPULATED PENALTIES

13.1 For each day, or portion thereof, that the Respondents fail to comply with any requirement of this Consent Order at the time and in the manner set forth herein, the Respondents shall be liable upon demand to EPA for the sums set forth below as stipulated penalties. Checks shall be made payable to the "Hazardous Substance Superfund" and shall be transmitted to:

U.S. Environmental Protection Agency, Region III
Attention: Superfund Accounting
P.O. Box 360515
Pittsburgh, PA 15251-6515

Payment shall be made by cashier's or certified check within thirty (30) calendar days of receipt of demand. Interest at the rate of the current annualized treasury bill rate shall begin to accrue on the unpaid balance at the end of the thirty day period pursuant to section 107(a) of CERCLA, 42 U.S.C. § 9607(a). A copy of the transmittal letter shall be sent simultaneously to the EPA Project Coordinator at the address identified in Section IX of this Consent Order and to:

EPA Region III Hearing Clerk (3RC00)
841 Chestnut Building
Philadelphia, PA 19107

13.2 Stipulated penalties shall accrue in the amount of $1,000 per day per violation for the first seven (7) calendar days, and

$2,000 per day for each calendar day thereafter. EPA may, in its sole discretion which shall not be subject to dispute resolution, forego demand for payment of any stipulated penalty under this Section XIII or may delay demand until such time EPA deems appropriate. The accrual of stipulated penalties set forth in this Section XIII shall not preclude EPA from pursuing other penalties or sanctions available to EPA for the Respondents' failure to comply with the requirements of this Consent Order. EPA will not seek civil penalties pursuant to section 122(l) of CERCLA, 42 U.S.C. § 9622(l), for any violation for which a stipulated penalty has been demanded pursuant to Section XIII of this Consent Order, except in the case of a willful violation of this Consent Order.

13.3 If Respondents in good faith object to the imposition of stipulated penalties, Respondents may invoke the dispute resolution procedures of Section XII of this Consent Order. Respondents may not, however, dispute the stipulated penalty rates set forth in Section 13.2 of this Consent Order.

XIV. FORCE MAJEURE AND NOTIFICATION OF DELAY

14.1 The Respondents, through their Project Coordinator, shall notify EPA of any delay or anticipated delay in achieving compliance with any requirement of this Consent Order. Such notification shall be made verbally as soon as possible but not later than two (2) calendar days after the Respondents, or any one of them, becomes aware or should have become aware of any such delay or anticipated delay, and in writing no later than seven (7) calendar days after the Respondents, or any one of them, becomes aware, or should have become aware, of such delay or anticipated delay. Such written notification shall be certified by the Respondents' Project Coordinator in accordance with Section XXII of this Consent Order and shall fully describe the nature of the delay, including how it may affect the Work, RAP, and schedule; the actions that will be or have been taken to mitigate, prevent, and/or minimize further delay; and the timetable according to which the future actions to mitigate, prevent, and/or minimize the delay will be taken. The Respondents shall ensure that their Project Coordinator provides them with immediate notification of any project delays. The Respondents shall adopt all reasonable measures to avoid and minimize such delay.

14.2 To the extent the Respondents intend to claim that any delay or anticipated delay described by the Respondents in accordance with Section 14.1 of this Consent Order was or will be caused by circumstances beyond each of their control, the Respondents shall, within fourteen (14) calendar days after

the Respondents becomes aware, or should have become aware, of such delay or anticipated delay, submit to EPA a "Notice of Force Majeure" in which the Respondents fully demonstrate that the delay was caused by circumstances beyond each of their control which could not have been overcome by due diligence, the necessity of the proposed length of the delay, and that the Respondents took and are taking all reasonable measures to avoid and minimize delay. The Respondents shall have the burden of proving these facts to EPA. Any "Notice of Force Majeure" shall be certified by a responsible official of the Respondents pursuant to Section 22.1(b) of this Consent Order.

14.3 Any such delay that EPA determines (1) has resulted or will result from circumstances beyond the control of the Respondents or any one of them, and (2) that could not and cannot be overcome by due diligence on the Respondents' part, shall not be deemed to be a violation of the Respondents' obligation(s) under this Consent Order, and shall not subject the Respondents to stipulated penalties under this Consent Order for that particular delay. In such event, the schedule affected by the delay shall be extended for a period EPA deems necessary to complete the Work on an expedited basis, but no greater than a period equal to the delay directly resulting from such circumstances. Increased costs of performance of the requirements of this Consent Order or changed economic circumstances shall not be considered circumstances beyond the control of the Respondents. Delay in one item or component of Work or the RAP does not justify delay in timely achievement of other items or components. Each delay must be separately addressed and substantiated according to the provisions of Sections 14.1 and 14.2 of this Consent Order.

14.4 Failure of the Respondents to comply with the notice requirements of Sections 14.1 and 14.2 of this Consent Order shall constitute a waiver of the Respondents' right to invoke the benefits of this Section with respect to that event.

14.5 In the event that EPA and the Respondents cannot agree that any delay in compliance with the requirements of this Consent Order has been or will be caused by circumstances beyond the control of the Respondents that cannot be overcome by due diligence, the dispute shall be resolved in accordance with the provisions of Section XII (Dispute Resolution) of this Consent Order.

XV. RESERVATION OF RIGHTS

15.1 Except as expressly provided in this Consent Order, (1) each party reserves all rights, claims, interests, and defenses it may otherwise have, and (2) nothing herein shall prevent EPA

ORIGINAL
(Red)

from seeking legal or equitable relief to enforce the terms of this Consent Order, including the right to seek injunctive relief and/or the imposition of statutory penalties.

15.2 As provided by this Consent Order, EPA expressly reserves its right to disapprove of Work performed by the Respondents; to halt Work being performed by the Respondents if the Respondents have not complied with an approved RAP or this Consent Order, or at any time EPA deems necessary to protect public health, welfare, or the environment and to perform such Work; to request and require hereunder that the Respondents correct and/or re-perform any and all Work disapproved by EPA; and/or to request or require that the Respondents perform response actions in addition to those required by this Consent Order. In the event EPA requires the Respondents, and the Respondents decline, to correct and/or re-perform work that has been disapproved by EPA and/or to perform response actions in addition to those required by this Consent Order, EPA reserves the right to undertake such actions and seek reimbursement of the costs incurred and/or to seek any other appropriate relief. In addition, EPA reserves the right to undertake removal and/or remedial actions at any time that such actions are appropriate under the NCP and to seek reimbursement for any costs incurred and/or take any other action authorized by law.

15.3 EPA reserves the right to bring an action against the Respondents for recovery of all recoverable costs incurred by the United States related to this Consent Order which are not reimbursed by the Respondents, as well as any other recoverable costs incurred by the United States in connection with response actions conducted at OU2.

15.4 This Consent Order concerns certain response actions (Work described in Section VIII of this Consent Order) concerning OU2. Such response actions might not fully address all contamination at OU2. Subsequent response actions which may be deemed necessary by EPA are not addressed by this Consent Order. EPA reserves all rights to institute other legal action in the future against the Respondents and/or any other parties in connection with the performance of any response actions at OU2 not addressed by this Consent Order.

15.5 Nothing in this Consent Order shall limit the authority of the EPA Remedial Project Manager as outlined in the NCP and CERCLA.

XVI. OTHER CLAIMS

ORIGINAL

16.1 Nothing in this Consent Order shall constitute or be construed as a release from any claim, cause of action, or demand in law or equity against any person, firm, partnership, or corporation not bound by this Consent Order for any liability it may have relating in any way to the generation, storage, treatment, handling, transportation, release, or disposal of any hazardous substances, hazardous wastes, pollutants, or contaminants found at, taken to, or taken from OU2.

16.2 This Consent Order does not constitute any decision on preauthorization of funds under section 111(a)(2) of CERCLA, 42 U.S.C. § 9611(a)(2).

16.3 By consenting to the issuance of this Consent Order, Respondents waive any claim to reimbursement it may have under sections 106(b), 111, and 112 of CERCLA, 42 U.S.C. §§ 9606(b), 9611, and 9612.

XVII. OTHER LAWS

17.1 All Work shall be undertaken in accordance with the requirements of all applicable and/or relevant and appropriate local, State, and Federal laws and regulations, as required by the NCP.

XVIII. EFFECTIVE DATE AND SUBSEQUENT MODIFICATION

18.1 The effective date of this Consent Order shall be the date on which it is signed by EPA.

18.2 This Consent Order may be amended by mutual agreement of EPA and the Respondents. Such amendments shall be in writing and shall have as their effective date the date on which such amendments are signed by EPA. Modifications to the EPA-approved RAP and its implementation may be made by mutual agreement of the Project Coordinators. Such modifications shall be memorialized in writing by the Project Coordinators.

18.3 Any reports, plans, specifications, schedules, or other submissions required by this Consent Order are, upon approval by EPA, incorporated into this Consent Order. Any non-compliance with such EPA-approved reports, plans, specifications, schedules, or other submissions shall be considered non-compliance with the requirements of this Consent Order and will subject the Respondents to the requirements of Section XIII (Delay in Performance and Stipulated Penalties) of this Consent Order. Determinations of non-compliance will be made by EPA.

18.4 No informal advice, guidance, suggestions, or comments by EPA regarding reports, plans, specifications, schedules, or other submissions by the Respondents or the requirements of this Consent Order will be construed as relieving the Respondents of its obligation to obtain formal approval when required by this Consent Order, and to comply with the requirements of this Consent Order unless formally modified.

XIX. LIABILITY OF THE UNITED STATES GOVERNMENT

19.1 Neither the United States Government nor any agency thereof shall be liable for any injuries or damages to persons or property resulting from acts or omissions of the Respondents, or of their employees, agents, servants, receivers, successors, or assigns, or of any persons including, but not limited to, firms, corporations, subsidiaries, contractors, or consultants in carrying out the Work, nor shall the United States Government or any agency thereof be held out as a party to any contract entered into by the Respondents in carrying out the Work.

XX. INDEMNIFICATION AND HOLD HARMLESS

20.1 The Respondents agree to indemnify and hold harmless the United States, its agencies, departments, agents, officers, employees, and representatives from any and all causes of action caused by any acts or omissions of the Respondents or their contractors in carrying out the work required by this Consent Order. Nothing in this Consent Order shall be construed in any way as affecting or limiting the rights or obligations of the Respondents or the United States under their various contracts.

XXI. REIMBURSEMENT OF COSTS

21.1 EPA shall submit to the Respondents periodic and/or a final accounting(s) of oversight costs incurred by the U.S. Government with respect to this Consent Order. Oversight costs shall consist of all costs, including indirect costs, incurred by EPA, its employees, agents, contractors, consultants, and other authorized and/or designated representatives in connection with EPA's oversight of the Work.

21.2 The Respondents shall, within thirty (30) calendar days of receipt of the accounting, remit a check for the amount of those costs made payable to the "Hazardous Substance Superfund." Interest at a rate established pursuant to section 107(a) of CERCLA, 42 U.S.C. § 9607(a), shall begin to

accrue on the unpaid balance from the day after the expiration of the thirty-day period notwithstanding any dispute or an objection to any portion of the costs. Checks shall specifically reference the "Morgantown Ordnance Works Disposal Areas Site-Operable Unit No. 2" and shall be transmitted as specified in Section XIII of this Consent Order.

XXII. CERTIFICATION OF COMPLIANCE

22.1 (a) Unless otherwise required by the terms of this Consent Order, any notice, report, certification, data presentation, or other document submitted by the Respondents under or pursuant to this Consent Order which discusses, describes, demonstrates, or supports any finding or makes any representation concerning the Respondents' compliance or non-compliance with any requirement of this Consent Order shall be certified by each Respondent, a responsible official of each Respondent, or by the Project Coordinator for the Respondents. The term "responsible official" means:

(i) a president, secretary, treasurer or vice-president of the corporation in charge of a principal business function, or any other person who performs similar policy- or decision-making functions for the corporation, or

(ii) the manager of one or more manufacturing facilities employing more than 250 persons or having gross annual sales or expenditures exceeding $35 million (in 1987 dollars when the consumer price index was 345.3), if authority to sign documents has been assigned or delegated to the manager in accordance with corporate procedures.

The responsible official of a partnership or sole proprietorship means the general partner or the proprietor, respectively.

(b) The written Final Report required by Section 8.11 of this Consent Order, any written notification described in Section 12.1 of this Consent Order, and any "Notice of Force Majeure" described in Section 14.2 of this Consent Order shall be certified by each Respondent or a responsible official of each Respondent.

22.2 The certification required by Section 22.1 of this Consent Order shall be in the following form:

ORIGINAL (Red)

I certify that the information contained in or accompanying this (specify type of submission) is true, accurate, and complete.

I am aware that there are significant penalties for submitting false information including the possibility of fines and imprisonment for knowing violations.

Signature:_____
Name (print):_____
Title: _____

22.3 Submission of documents pursuant to this Consent Order which are found by EPA to contain false information shall constitute a failure to comply with this Consent Order and shall subject the Respondents to, among other things, stipulated penalties whether or not a responsible official of the Respondents has certified the document.

XXIII. SHIPMENT OF HAZARDOUS SUBSTANCES

23.1 The Respondents shall, prior to any off-site shipment of hazardous substances from OU2 to an out-of-state waste management facility, provide written notification to the appropriate state environmental official in the receiving state and to EPA's Project Coordinator of such shipment of hazardous substances. The requirement to notify EPA of shipments shall not apply to any such off-site shipments when the total volume of all such shipments will not exceed ten (10) cubic yards. Notifications to States in those circumstances shall be governed by applicable state law.

23.2 The notification required by Section 23.1 of this Consent Order shall be in writing and shall include the following information, where available:

(a) the name and location of the facility to which the hazardous substances are to be shipped;

(b) the type and quantity of the hazardous substances to be shipped;

(c) the expected schedule for the shipment of the hazardous substances; and

(d) the method of transportation of the hazardous substances.

The Respondents shall notify the receiving state of major changes in the shipment plan, such as a decision to ship the

hazardous substances to another facility within the same state or to a facility in another state.

23.3 The identity of the receiving facility and State will be determined by the Respondents. The Respondents shall provide all relevant information to EPA and the receiving State, including information required by Section 23.1 of this Consent Order, relating to the off-site shipments as soon as practicable but no later than one (1) business day before the hazardous substances are actually shipped.

XXIV. RECORD RETENTION

24.1 The Respondents shall preserve all documents and information relating to the Work performed under this Consent Order, or relating to the hazardous substances found at or released from OU2, for six (6) years following completion of the response action required by this Consent Order. In addition, Respondents shall also retain, as appropriate, monthly reports on analytical services pursuant to OSWER Directive No. 9240.0-2B, "Extending the Tracking of Analytical Services to Potentially Responsible Party-Lead Superfund Sites," (July 6, 1992). At the end of this six year period and thirty (30) days before any document or information is destroyed, and subject to Section 11.5 of this Consent Order pertaining to privileged or protected records and documents, the Respondents shall notify EPA that such documents and information are available to EPA for inspection, and upon request, shall provide the originals or copies of such documents and information to EPA.

24.2 Neither agreement to, nor compliance with, the requirements of this Section XXIV shall constitute a waiver of any privileges Respondents might wish to assert over documents preserved, collected, or maintained by Respondents and/or requested by EPA.

XXV. DEFINITIONS

25.1 "Business days" as used in this Consent Order shall mean every day of the week except Saturdays, Sundays, and federal holidays.

25.2 "Calendar days" as used in this Consent Order shall mean every day of the week, including Saturdays, Sundays, and federal holidays.

25.3 "Days" as used herein shall mean "calendar days" unless specified otherwise.

25.4 "RI/FS Consent Order" shall mean the Administrative Order on Consent corresponding to EPA Docket No. III-90-16-DC and which was signed by EPA on June 4, 1990.

25.5 All terms not defined herein shall have the meanings set forth in CERCLA and the NCP.

XXVI. NOTICE OF COMPLETION

26.1 When EPA determines, after EPA's review and approval of the Final Report required pursuant to Section 8.11 of this Consent Order, that the response action specified in Section VIII of this Consent Order has been fully performed, and upon receipt of costs and penalties assessed by EPA (if any), with the exception of any continuing obligations required by this Consent Order, including those requirements specified in Sections XV ("Reservation of Rights"), XVI ("Other Claims"), XIX ("Liability of the United States"), XX ("Indemnification and Hold Harmless"), and XXIV ("Record Retention"), EPA will provide a notice of completion ("Notice of Completion") to the Respondents.

26.2 The Notice of Completion provided by EPA pursuant to Section 26.1 of this Consent Order shall serve as written notice by EPA, pursuant to Section XXIII.B of the RI/FS Consent Order, that all the terms of the RI/FS Consent Order have been completed. In accordance with Section XXIII.B of the RI/FS Consent Order, such notice shall not terminate the Respondents' obligations under Sections XIII (Record Preservation); XVII (Reservation of Rights); XVIII (Reimbursement of Costs); and XX (Other Applicable Laws) of the RI/FS Consent Order.

XVII. AMENDMENT NO. 1 TO THE RI/FS CONSENT ORDER

27.1 Pursuant to Section XXII of the RI/FS Consent Order, the RI/FS Consent Order shall be amended as follows:

(a) Except as provided in Sections 27.1(b) and (c) of this Consent Order (EPA Docket No. III-96-68-DC), all obligations of the Respondents contained in the RI/FS Consent Order are suspended.

(b) The suspension of obligations set forth in Section 27.1(a) of this Consent Order (EPA Docket No. III-96-68-DC) shall not affect the Respondents' obligations under Sections XIII (Record Preservation); XVII (Reservation of Rights); XVIII (Reimbursement of Costs); and XX (Other Applicable Laws) of the RI/FS Consent Order.

(c) This Amendment No. 1 to the RI/FS Consent Order may be revoked by EPA at any time prior to receipt by Respondents of a Notice of Completion pursuant to Section 26.1 of this Consent Order (EPA Docket No. III-96-68-DC) if EPA determines that Respondents are not proceeding in good faith to comply with the requirements of this Consent Order. Any such revocation shall be in writing and shall be effective upon receipt by the Project Coordinator designated by the Respondents under this Consent Order (EPA Docket No. III-96-68-DC), except that in the event dispute resolution is invoked by Respondents pursuant to Section XII of this Consent Order, such effective date shall be the date on which agreement resolving the dispute is reached or EPA issues its written decision resolving such dispute pursuant to Section XII of this Consent Order, whichever occurs earlier.

(d) In the event EPA revokes this Amendment No. 1 to the RI/FS Consent Order, the Respondents shall provide to EPA for approval, within thirty (30) days of the effective date of such revocation notice, a work plan that, at a minimum, describes the tasks remaining to be accomplished in the RI/FS Consent Order and includes an expeditious schedule for completion of such tasks ("RI/FS Restart Workplan"). EPA will notify the Respondents of its approval or disapproval of the RI/FS Restart Workplan, or any portion thereof, in accordance with the procedures set forth in Section VIII.C.3 of the RI/FS Consent Order. The Respondents shall revise and submit the RI/FS Restart Workplan in accordance with the procedures set forth in Section VIII.C.3 of the RI/FS Consent Order. Upon approval by EPA, the RI/FS Restart Workplan shall be incorporated into the RI/FS Consent Order, and the terms and schedules therein shall become requirements of the RI/FS Consent Order. The Respondents shall commence implementation of the EPA-approved RI/FS Restart Workplan no later than thirty (30) days following receipt of EPA approval of the RI/FS Restart Workplan.

27.2 The effective date of this Amendment No. 1 to the RI/FS Consent Order shall be the effective date of this Consent Order (EPA Docket No. III-96-68-DC).

XXVIII. COVENANT NOT TO SUE

28.1 Except as otherwise specifically provided in this Consent Order, upon issuance of the Notice of Completion pursuant to

ORIGINAL (Red)

Section 26.1 of this Consent Order, EPA agrees not to sue or take any administrative action against the Respondents for any failure to perform the Work required by this Consent Order.

XXIX. CONTRIBUTION PROTECTION

29.1 With regard to claims for contribution against Respondents for matters addressed in this Consent Order, the Parties hereto agree that Respondents are entitled to protection from contribution actions or claims to the extent provided by section 113(f)(2) of CERCLA, 42 U.S.C § 9613(f)(2). Nothing in this Consent Order precludes the United States or the Respondents from asserting any claims, causes of action or demands against any persons not party to this Consent Order for indemnification, contribution, or cost recovery.

XXX. ADMISSIONS

30.1 Nothing in this Consent Order is intended or shall be construed to be an admission as to fact or law (including, but not limited to, EPA's Findings of Fact, Conclusions of Law, and Determinations set forth in Sections III, IV, and V of this Consent Order, or an estoppel or a waiver of defenses by Respondents for any purpose other than enforcement of this Consent Order. Further, participation by Respondents in the removal action required by this Consent Order is not intended to be, and shall not be construed to be, an admission of fact or law with regard to any matter addressed by this Consent Order.

FOR THE RESPONDENTS:

_____ _____
Date

Name: _____

Title: _____

Company: _____

ORIGINAL (Red)

_____ _____
Date

Name: _____

Title: _____

Company: _____

_____ _____
Date

Name: _____

Title: _____

Company: _____

FOR EPA:

_____ _____
W. Michael McCabe Date
Regional Administrator
U.S. Environmental Protection Agency
Region III

ORIGINAL

ORIGINAL
(Red)

APPENDIX F

WEEKLY AND BY-WEEKLY ACTIVITY REPORTS

ORIGINAL
(Red)

WEEKLY REPORTS

MORGANTOWN ORDNANCE WORKS OU-2 REMOVAL ACTION
WEEKLY FIELD ACTIVITY REPORT
(Continued)

Week Ending 4-11-97

EXECUTIVE SUMMARY

SUMMARY FORCE REPORT (Total Manhours)

	EPA	ACOE	MTC	ICF KE	SUBS	TOTAL
Supervision		2	1	1/50		50
Health & Safety				4/32		32
Project Advisor		1				
Project Manager	1			1/50		50
Project Engineers				1/50		50
Technicians				1/50	6/300	350
Operators					1/50	50
TOTALS	1	3	1	8	7	582

PROGRESS MILESTONES:

1. Installed temporary roadway into Crane Alley work area.
2. Working on permanent handrail at Crane Alley.
3. Modutank at Main Process Area complete.
4. Modutank at Coke Battery complete.
5. Filter at Crane Alley in place and plumed to tank.
6. Culvert pipe installed and 4" PVC pipe through it.

- Total Samples Shipped None
- Total Volume of Hazardous Soil Shipped None
- Total Volume of Non-Hazardous Soil Shipped None
- Total Volume of Backfill Received None

MORGANTOWN ORDNANCE WORKS OU-2 REMOVAL ACTION
WEEKLY FIELD ACTIVITY REPORT
(Continued)

Week Ending 4-11-97

DETAILED LABOR FORCE

	Sunday	Monday	Tuesday	Wednesday	Thursday	Friday	Saturday
ICF Kaiser							
Project Manager							
Project Engineer		1/10	1/10	1/12	1/10		
H&S Officer			1/10	1/12	1/12	2/6	
Remco							
Project Manager		1/10	1/10	1/12			
Site Manager		1/10	1/10	1/12	1/12	1/6	
Technician		1/10	1/10	1/12	1/12	1/6	
On-Site Environmental							
Laborers		6/10	6/10	6/12	6/12	6/6	
Operators		1/10	1/10	1/12	1/12	1/6	
Tri-Ad Surveyors							
Surveyors							
W&K Trucking							
Drivers							
Stuber							
Operators							
Nashville ACOE							
Representative(s)			3/10	2/10	2/10		
USEPA							
Representative(s)			1/10	1/10	1/10		

RECAP

	Sunday	Monday	Tuesday	Wednesday	Thursday	Friday	Saturday
ACOE			3	2	2		
USEPA			1	1	1		
ICF Kaiser		1	2	2	2	2	
REMCO		3	3	3	2	2	
Subcontractors		7	7	7	7	7	
TOTAL		11	16	15	14	11	

ORIGINAL (Red)

MORGANTOWN ORDNANCE WORKS OU-2 REMOVAL ACTION
WEEKLY FIELD ACTIVITY REPORT
(Continued)

Week Ending 4-11-97

EQUIPMENT

	Sunday	Monday	Tuesday	Wednesday	Thursday	Friday	Saturday	Total
4" Water Pump		1	1	1	1	1		5
3" Water Pump		2	2	2	2	2		10
Pick-Up Truck		2	2	2	2	2		10
Dump Truck								
Excavator		1	1	1	1	1		5
F/E Loader		1	1	1	1	1		5
Power Washer		1	1	1	1	1		5
Air Compressor		1	1	1	1	1		5
ModuTanks		2	2	2	2	2		10
Generator		1	1	1	1	1		5
Porta Johns		2	2	2	2	2		10
Office Trailer		1	1	1	1	1		5
Tool Trailer		1	1	1	1	1		5
Skid Steer		1	1	1	1	1		5
Vacuum Truck								
Compactor		1	1	1	1	1		5
Torch		1	1	1	1	1		5

ORIGI
(Rec

MORGANTOWN ORDNANCE WORKS OU-2 REMOVAL ACTION
WEEKLY FIELD ACTIVITY REPORT
(Continued)

Week Ending 4-11-97

Sunday - 4-6-97 ___°F Low ___°F High

--
--
--
--
--

Monday - 4-7-97 43 °F Low 57 °F High

-- Working on permanent hand rail.
-- Put temporary roadway into Crane Alley Area.
-- Finished Crane Alley Modutank.
-- Leveling and installing berms for second containment cell.
--
--

Tuesday - 4-8-97 37 °F Low 55 °F High

-- Steve Thompson, John Burns, Wren Wilson, Melissa Whittington and Doug Mullendor on-site.
-- Construction fence installation complete.
-- Two loads of sand delivered.
--
--
--

Wednesday - 4-9-97 25 °F Low 30 °F High

-- Melissa Whittington told us not to take confirmatory sample of excavation until Steve Thompson returns on the 15th of April.
-- 600 feet of 4" discharge line glued and laid out.
--
--

MORGANTOWN ORDNANCE WORKS OU-2 REMOVAL ACTION
WEEKLY FIELD ACTIVITY REPORT
(Continued)

ORIGINAL (Red)

Week Ending 4-11-97

Thursday - 4-10-97 25 °F Low ___°F High

-- Second Modutank completed.
-- Filter for Modutank at Crane Alley in place, hooked up.
-- Culvert across junk yard road in place, PVC line installed through it.
-- 4" trash pump in place and flow meter installed.
--
--
--

Friday - 4-11-97 ___°F Low ___°F High

-- Finished installing 4" PVC pipe to outfall.
-- Finish safety cable at pump pit.
-- Patch hole in liner at Crane Alley Modutank.
-- Burn holes in plate for Crane Alley.
-- Move ears on plates and reweld.
--
--

Saturday - _____ ___°F Low ___°F High

-- No work
--
--
--
--
--
--
--

MORGANTOWN ORDNANCE WORKS OU-2 REMOVAL ACTION
WEEKLY FIELD ACTIVITY REPORT
(Continued)

Week Ending 4-11-97

	S	M	T	W	T	F	S	Total
Total Samples Shipped								
Total Tons of Rip-Rap Backfill Received								
Total Tons of Borrow Soil Backfill Received								
Total Tons of 3" Limestone					55.4			55.4
Total Tons of Sand Backfill Received		133.6	60.2		59.2			253.0
Total Tons of 2A Modified Crusher Run Backfill Received					19.95			19.95
Total Tons of Pea Stone Chips					77.05			77.05
Total Tons of River Gravel Backfill Received								
Total Tons of Hazardous Soil Removed								
Total Tons of Non-Hazardous Soil Removed								
HAZARDOUS SOIL (Tons Leaving Site)								
Main Process Bldg. Hot Spots								
Crane Alley								
Blue Stained Area								
Quench Tower								
Interceptor Sump								
NON-HAZARDOUS SOIL (Tons)								
Main Process Bldg. Hot Spots								
Crane Alley								
Blue Stained Area								
Quench Tower								
Interceptor Sump								

MORGANTOWN ORDNANCE WORKS OU-2 REMOVAL ACTION
WEEKLY FIELD ACTIVITY REPORT
(Continued)

ORIGINAL (Red)

Week Ending 4-4-97

EXECUTIVE SUMMARY

SUMMARY FORCE REPORT (Total Manhours)

	EPA	ACOE	MTC	ICF KE	SUBS	TOTAL
Supervision	___	___	___	1/50	___	50
Health & Safety	___	___	___	2/72	___	72
Project Advisor	___	___	___	0	___	0
Project Manager	___	___	___	1/50	___	50
Project Engineers	___	___	___	1/50	___	50
TOTALS	___	___	___	5	___	222

PROGRESS MILESTONES:

1. Dozer, skidloader, and excavator on-site.
2. Pumps and equipment on-site.
3. Tool trailer on-site
4. Hot spots surveyed.
5. Steps leading into Crane Alley complete.
6. Containment cell at Crane Alley complete.

- Total Samples Shipped None
- Total Volume of Hazardous Soil Shipped None
- Total Volume of Non-Hazardous Soil Shipped None
- Total Volume of Backfill Received None

ORIGINAL (Red)

MORGANTOWN ORDNANCE WORKS OU-2 REMOVAL ACTION
WEEKLY FIELD ACTIVITY REPORT
(Continued)

Week Ending 4-4-97

DETAILED LABOR FORCE

	Sunday	Monday	Tuesday	Wednesday	Thursday	Friday	Saturday
ICF Kaiser							
Project Manager							
Project Engineer		1/10	1/10	1/10	1/10	1/10	
H&S Officer							
Remco							
Project Manager		1/10	1/10	1/10	1/10	1/10	
Site Manager		1/10	1/10	1/10	1/10	1/10	
Technician		1/10	1/10	1/10	1/10	1/10	
On-Site Environmental							
Laborers		6/10	6/10	6/10	6/10	6/10	
Operators		1/10	1/10	1/10	1/10	1/10	
Tri-Ad Surveyors							
Surveyors		2/10	2/4				
W&K Trucking							
Drivers							
Stuber							
Operators							
Nashville ACOE							
Representative(s)							
USEPA							
Representative(s)							

RECAP

	Sunday	Monday	Tuesday	Wednesday	Thursday	Friday	Saturday
ACOE							
USEPA							
MTC							
ICF Kaiser		1	1	1	1	1	
REMCO		3	3	3	3	3	
Subcontractors		9	9	7	7	7	
TOTAL		13	13	11	11	11	

ORIGINAL (Red)

MORGANTOWN ORDNANCE WORKS OU-2 REMOVAL ACTION
WEEKLY FIELD ACTIVITY REPORT
(Continued)

Week Ending 4-4-97

EQUIPMENT

	Sunday	Monday	Tuesday	Wednesday	Thursday	Friday	Saturday	Total
4" Water Pump		1	1	1	1	1		5
3" Water Pump		2	2	2	2	2		10
Pick-Up Truck		2	2	2	2	2		10
Dump Truck								
Excavator		1	1	1	1	1		5
F/E Loader						1		1
Power Washer		1	1	1	1	1		5
Air Compressor		1	1	1	1	1		5
ModuTanks			2	2	2	2		8
Generator		1	1	1	1	1		5
Porta Johns		2	2	2	2	2		10
Office Trailer			1	1	1	1		4
Tool Trailer		1	1	1	1	1		5
Skid Steer		1	1	1	1	1		5
Vacuum Truck								
Compactor			1	1	1	1		4
Torch								

ORIGINAL (Red)

MORGANTOWN ORDNANCE WORKS OU-2 REMOVAL ACTION
WEEKLY FIELD ACTIVITY REPORT
(Continued)

Week Ending 4-4-97

Sunday - 3-30-97 ___°F Low ___°F High

-- No Work
--
--
--
--
--

Monday - 3-31-97 32 °F Low 38 °F High

-- Equipment tools and supplies being delivered.
-- Begin construction of haul road to OU-1 Landfill.
-- Install construction fence around work areas.
-- PVC pipe delivered.
-- Lay fabric and stone for trailer staging area.
-- Begin building steps in Crane Alley

Tuesday - 4-1-97 24 °F Low 52 °F High

-- Health and safety meeting with Dan Welshons.
-- Surveyor on-Site.
-- Office trailer delivered.
-- Quantitative fit test conducted at West Virginia University.
-- Modutank Tanks on-Site.

Wednesday - 4-2-97 43 °F Low 64 °F High

-- Install construction fence around Main Process Area.
-- Road to OU-1 landfill complete.
-- Water filter and road plates delivered.
-- Westover Fire Department delivers water for decon tanks.
-- Steps complete for main access to Crane Alley
-- Sam Bloom injured his finger, was taken to the hospital.

MORGANTOWN ORDNANCE WORKS OU-2 REMOVAL ACTION
WEEKLY FIELD ACTIVITY REPORT
(Continued)

Week Ending 4-4-97

Thursday - 4-3-97 40 °F Low 66 °F High

-- Clearing and chipping of work areas
-- Sand being graded and leveled in Modutank construction area.
-- Pump pit steps completed and temporarily anchored.
-- Construction fence being installed at Coke Battery.
-- Lay out PVC liner for containment.
--
--
--

Friday - 4-4-97 45 °F Low 67 °F High

-- Final layer of sand being placed for containment cell.
-- Construction of Modutank begins.
-- First layer of sand being placed at Coke Battery location.
-- All but 4 or 5 panels of Modutank compete in order to access with liner.
--
--
--

Saturday - _____ ___°F Low ___°F High

-- No Work
--
--
--
--
--
--
--

(ORIGINAL Red)

MORGANTOWN ORDNANCE WORKS OU-2 REMOVAL ACTION
WEEKLY FIELD ACTIVITY REPORT
(Continued)

Week Ending 4-4-97

	S	M	T	W	T	F	S	Total
Total Samples Shipped								
Total Tons of Rip-Rap Backfill Received		8						8
Total Tons of Borrow Soil Backfill Received								
Total Tons of 3" Limestone		4		10				14
Total Tons of Sand Backfill Received				9	12	4		25
Total Tons of 2A Modified Crusher Run Backfill Received								
Total Tons of River Gravel Backfill Received								
Total Tons of Hazardous Soil Removed								
Total Tons of Non-Hazardous Soil Removed								
HAZARDOUS SOIL (Tons Leaving Site)								
Main Process Bldg. Hot Spots								
Crane Alley								
Blue Stained Area								
Quench Tower								
Interceptor Sump								
NON-HAZARDOUS SOIL (Tons)								
Main Process Bldg. Hot Spots								
Crane Alley								
Blue Stained Area								
Quench Tower								
Interceptor Sump								

MORGANTOWN ORDNANCE WORKS OU-2 REMOVAL ACTION
WEEKLY FIELD ACTIVITY REPORT
(Continued)

ORIGINAL (Red)

Week Ending 4-18-97

EXECUTIVE SUMMARY

SUMMARY FORCE REPORT (Total Manhours)

	EPA	ACOE	MTC	ICF KE	SUBS	TOTAL
Supervision		1/30		1/50		80
Health & Safety				2/70		140
Project Advisor				0		0
Project Manager				1/20		20
Project Engineers				1/20		20
TOTALS		1		5		260

PROGRESS MILESTONES:

1. Phase I excavation of Lead Hot Spot Nos. 1, 2, 4, 8, and 10 complete.
2. Base and side wall confirmatory samples collected from Hot Spots.
3. Water from Eastern Pit #6 filled C-SS-8 excavation.
4. Modutank at Crane Alley full. Two water samples collected.
5. Air monitoring samples shipped.
6.

- Total Samples Shipped 39
- Total Volume of Hazardous Soil Shipped None
- Total Volume of Non-Hazardous Soil Shipped None
- Total Volume of Backfill Received None

ORIGINAL
(Red)

MORGANTOWN ORDNANCE WORKS OU-2 REMOVAL ACTION
WEEKLY FIELD ACTIVITY REPORT
(Continued)

Week Ending 4-18-97

DETAILED LABOR FORCE

	Sunday	Monday	Tuesday	Wednesday	Thursday	Friday	Saturday
ICF Kaiser							
Project Manager			1/3				
Project Engineer			1/10	1/10			
H&S Officer		1/10	1/10	1/10			
Remco							
Project Manager					1/10	1/6	
Site Manager		1/10	1/10	1/10	1/10	1/10	
Technician		1/10	1/10	1/10	1/10	1/10	
On-Site Environmental							
Laborers		6/60	6/60	6/60	6/60	6/60	
Operators		1/10	1/10	1/10	1/10	1/10	
Tri-Ad Surveyors							
Surveyors			2				
W&K Trucking							
Drivers							
Stuber							
Operators							
Nashville ACOE							
Representative(s)			1/6	1/11	1/5		
USEPA							
Representative(s)							
AACC Subcontractor							
Representative(s)					2/10		

RECAP

	Sunday	Monday	Tuesday	Wednesday	Thursday	Friday	Saturday
ACOE			1/6	1/11	1/5		
USEPA							
ICF Kaiser		1/10	3/23	2/20			
REMCO		2/20	2/20	2/20	3/30	3/26	
Subtotal		**3/30**	**6/49**	**5/51**	**4/35**	**3/26**	
Contractors		7/70	7/70	7/70	9/90	7/70	
TOTAL		**10/100**	**13/119**	**12/121**	**13/125**	**10/96**	

ORIGINAL
(Red)

MORGANTOWN ORDNANCE WORKS OU-2 REMOVAL ACTION
WEEKLY FIELD ACTIVITY REPORT
(Continued)

Week Ending 4-18-97

EQUIPMENT

	Sunday	Monday	Tuesday	Wednesday	Thursday	Friday	Saturday	Total
4" Water Pump		1	1	1	1	1		5
3" Water Pump		2	2	2	2	2		10
Pick-Up Truck		2	2	2	2	2		10
Dump Truck								
Excavator		1	1	1	1	1		5
F/E Loader		1	1	1	1	1		5
Power Washer		1	1	1	1	1		5
Air Compressor		1	1	1	1	1		5
ModuTanks		2	2	2	2	2		10
Generator		1	1	1	1	1		5
Porta Johns		2	2	2	2	2		10
Office Trailer		1	1	1	1	1		5
Tool Trailer		1	1	1	1	1		5
Skid Steer		1	1	1	1	1		5
Vacuum Truck								
Compactor		1	1	1	1	1		5
Torch		1	1	1	1	1		5
Filter Unit		1	1	1	1	1		5

ORIGINAL
(Red)

MORGANTOWN ORDNANCE WORKS OU-2 REMOVAL ACTION
WEEKLY FIELD ACTIVITY REPORT
(Continued)

Week Ending 4-18-97

Sunday - _____ ___°F Low ___°F High

-- No Work

--

--

--

--

Monday - 4-14-97 30 °F Low 58 °F High

-- G.E. personnel informed crew installing 4" PVC discharge line to stop working in that area due to a gas leak.

-- Phase I excavations of Hot Spot Nos. 1, 2, 4 complete.

-- Shipped air monitoring samples to lab via federal express.

-- Soil stockpiles secured with hay bales and poly covering.

--

Tuesday - 4-15-97 35 °F Low 51 °F High

-- Chipping in coke battery area complete.

-- Phase I excavations of Hot Spot Areas 8 & 10 complete. Over excavated Hot Spot #2, 65" north, took perimeter sample.

-- Hot Spots 1, 2, 4, 8, & 10 base and side wall samples taken and shipped to lab.

-- Doug Taylor visited site, Steve Thompson (ACOE) on-site at 1300.

--

Wednesday - 4-16-97 30 °F Low 70 °F High

-- Took sample in Crane Alley Modutank at 50,000 gallon volume (1/2 full).

-- End of day Modutank volume 100,000 gal. Took second sample.

-- Thompson & Cecchett took base and side wall soil samples of C-SS-11.

-- During final phase of excavating Hot Spot C-SS-8 uncovered 18" pipe that lead to Eastern Pit #6. Excavation filled with water.

MORGANTOWN ORDNANCE WORKS OU-2 REMOVAL ACTION
WEEKLY FIELD ACTIVITY REPORT
(Continued)

Week Ending 4-18-97

Thursday - 4-17-97 35 °F Low 43 °F High

-- Asbestos task in Crane Alley complete.
-- Chipping and clearing of OU-1 Landfill complete.
-- Excavation of C-SED-3 (Northern Blue Stained Material Area) began.
-- Chipping and clearing of Western Sump #20.
--
--
--
--

Friday - 4-18-97 34 °F Low 51 °F High

-- Collected three samples from Hot Spot #2.
-- Decon of excavator bucket.
-- Cleared and grubbed pump pit at Crane Alley.
--
--
--
--

Saturday - _____ ___°F Low ___°F High

-- No work.
--
--
--
--
--
--
--

MORGANTOWN ORDNANCE WORKS OU-2 REMOVAL ACTION
WEEKLY FIELD ACTIVITY REPORT
(Continued)

Week Ending 4-18-97

	S	M	T	W	T	F	S	Total
Total Samples Shipped			28	2	6	3		39
Total Tons of Rip-Rap Backfill Received								
Total Tons of Borrow Soil Backfill Received								
Total Tons of 3" Limestone			81.55					81.55
Total Tons of Sand Backfill Received								
Total Tons of 2A Modified Crusher Run Backfill Received			60.70					60.70
Total Tons of River Gravel Backfill Received								
Total Tons of Hazardous Soil Removed								
Total Tons of Non-Hazardous Soil Removed								
HAZARDOUS SOIL (Tons Leaving Site)								
Main Process Bldg. Hot Spots								
Crane Alley								
Blue Stained Area								
Quench Tower								
Interceptor Sump								
NON-HAZARDOUS SOIL (Tons)								
Main Process Bldg. Hot Spots								
Crane Alley								
Blue Stained Area								
Quench Tower								
Interceptor Sump								

MORGANTOWN ORDNANCE WORKS OU-2 REMOVAL ACTION
WEEKLY FIELD ACTIVITY REPORT
(Continued)

ORIGINAL (Red)

Week Ending 4-25-97

EXECUTIVE SUMMARY

SUMMARY FORCE REPORT (Total Manhours)

	EPA	ACOE	MTC	ICF KE	REMCO	SUBS	TOTAL
Supervision		16	18		1/62	369	465
Health & Safety					1/56		56
Project Advisor							
Project Manager				1/4	1/32		36
Project Engineers				1/11			11
TOTALS		16	18	2/15	3/150	369	568

PROGRESS MILESTONES:

1. Phase II over-excavations of Hot Spots 1, 4, and 8 complete.
2. All PVC pipe in place for water discharge.
3. C-SED-3 (Northern Blue Stained Material) excavation complete.
4. Pumped Modutank #1 Main Process Area. Discharged approximately 82,190 gallons to river.

- Total Samples Shipped 14
- Total Volume of Hazardous Soil Shipped 0
- Total Volume of Non-Hazardous Soil Shipped 17.5 tons
- Total Volume of Backfill Received 282

MORGANTOWN ORDNANCE WORKS OU-2 REMOVAL ACTION
WEEKLY FIELD ACTIVITY REPORT
(Continued)

Week Ending 4-25-97

DETAILED LABOR FORCE

	Sunday	Monday	Tuesday	Wednesday	Thursday	Friday	Saturday
ICF Kaiser							
Project Manager				1/4			
Project Engineer					1/11		
H&S Officer							
Remco							
Project Manager				1/16	1/10		1/6
Site Manager		1/10	1/10	1/16	1/10	1/10	1/6
Technician		1/10	1/10	1/16	1/10	1/10	
On-Site Environmental							
Laborers		6/60	6/60	6/60	6/60	6/60	
Operators		1/10	1/10	1/13	1/10	1/10	
Tri-Ad Surveyors							
Surveyors							
W&K Trucking							
Drivers							
Stuber							
Operators					1/11	1/5	
Nashville ACOE							
Representative(s)					1/11	1/5	
USEPA							
Representative(s)							
MTC							
Representative(s)				1/13	1/5		

RECAP

	Sunday	Monday	Tuesday	Wednesday	Thursday	Friday	Saturday
ACOE					11	5	
USEPA							
ICF Kaiser				4	11		
REMCO		20	20	48	30	20	
Subtotal		20	20	52	52	25	
Contractors		70	70	73	81	75	
Contractors				13	5		
TOTAL		90	90	138	138	100	

MORGANTOWN ORDNANCE WORKS OU-2 REMOVAL ACTION
WEEKLY FIELD ACTIVITY REPORT
(Continued)

ORIGINAL (Red)

Week Ending 4-25-97

EQUIPMENT

	Sunday	Monday	Tuesday	Wednesday	Thursday	Friday	Saturday	Total
4" Water Pump		1	1	1	1	1		5
3" Water Pump		2	2	2	2	2		10
Pick-Up Truck		2	2	2	2	2		10
Dump Truck								
Excavator		1	1	1	1	1		5
F/E Loader		1	1	1	1	1		5
Power Washer		1	1	1	1	1		5
Air Compressor		1	1	1	1	1		5
ModuTanks		2	2	2	2	2		10
Generator		1	1	1	1	1		5
Porta Johns		2	2	2	2	2		10
Office Trailer		1	1	1	1	1		5
Tool Trailer		1	1	1	1	1		5
Skid Steer		1	1	1	1	1		5
Vacuum Truck					1	1		2
Compactor		1	1	1	1	1		5
Torch		1	1	1	1	1		5

MORGANTOWN ORDNANCE WORKS OU-2 REMOVAL ACTION
WEEKLY FIELD ACTIVITY REPORT
(Continued)

Week Ending 4-25-97

Sunday - _____ ___°F Low ___°F High

-- No work.

Monday - 4-21-97 40 °F Low 54 °F High

-- Pumped water from sumps and pits in former Coke Battery Area.
-- Phase II over-excavations of Hot Spots 1, 4, and 8 complete.
-- 100 bales of hay delivered.
-- Pumped water from sumps 6A-B-C, 7, 8, and 10.

Tuesday - 4-22-97 42 °F Low 62 °F High

-- Modutank #2 near Coke Battery filled.
-- Finished C-SED-3 excavation.
-- Kiln dust delivered.
-- Hot Spot 10 backfilled.
-- Finished assembly of 4" PVC discharge line.

Wednesday - 4-23-97 43 °F Low 61 °F High

-- Cleared and grubbed Hot Spot 2.
-- Performed pressure test of discharge line.
-- Peformed decontamination of excavator bucket.
-- Received backfill for C-SS-11.
-- Pumped Modutank #1 to River (approximately 82,190 gallons). Pumping rate from pump to outfall was 325 gpm.

MORGANTOWN ORDNANCE WORKS OU-2 REMOVAL ACTION
WEEKLY FIELD ACTIVITY REPORT
(Continued)

Week Ending 4-25-97

Thursday - 4-24-97 50 °F Low 60 °F High

-- Pumping water from pit into Modutank #1 at Crane Alley.
-- Began supersucking of sediment in eastern sumps, Hot Spot 2, and Hot Spot 8.
-- Sediment from Crane Alley and Pump Pit excavated into roll-off.
-- Began Phase II over-excavation of Hot Spot 2.
-- Finely divided droplets of mercury were discovered in recessed box drains in Hot Spot 2 area.

Friday - 4-25-97 39°F Low 53°F High

-- Continued supersucking of pits in former Coke Oven Area.
-- Completed backfilling of sumps 1, 2, 3A, 3B, 4, 5 and 7.
-- Completed overexcavation of Hot Spot 2.
--
--
--
--

Saturday - _____ ___°F Low ___°F High

-- No work.
--
--
--
--
--
--
--

ORIGINAL (Red)

MORGANTOWN ORDNANCE WORKS OU-2 REMOVAL ACTION
WEEKLY FIELD ACTIVITY REPORT
(Continued)

Week Ending 4-25-97

	S	M	T	W	T	F	S	Total
Total Samples Shipped			2	1	11			14
Total Tons of Rip-Rap Backfill Received								
Total Tons of Borrow Soil Backfill Received					48			48
Total Tons of 3" Limestone		64.3	50.6					114.9
Total Tons of Sand Backfill Received		50.95	156.87					207.8
Total Tons of 2A Modified Crusher Run Backfill Received								25.9
Total Tons of River Gravel Backfill Received								
Total Tons of Hazardous Soil Removed								
Total Tons of Non-Hazardous Soil Removed								
Kiln Dust			17.34					17.34
HAZARDOUS SOIL (Tons Leaving Site)								
Main Process Bldg. Hot Spots								
Crane Alley								
Blue Stained Area								
Quench Tower								
Interceptor Sump								
NON-HAZARDOUS SOIL (Tons)								
Main Process Bldg. Hot Spots								
Crane Alley					18			18
Blue Stained Area								
Quench Tower								
Eastern Sumps								
Western Sumps					5			5
GALLONS OF WATER PUMPED								
Main Process Building Modutank				82,190				82,190
Coke Oven Battery Modutank								

MORGANTOWN ORDNANCE WORKS OU-2 REMOVAL ACTION
WEEKLY FIELD ACTIVITY REPORT
(Continued)

Week Ending 5-2-97

EXECUTIVE SUMMARY

SUMMARY FORCE REPORT (Total Manhours)

	EPA	ACOE	MTC	ICF KE	SUBS	TOTAL
Supervision	20	20		1/53	503	596
Health & Safety				1/73		73
Project Advisor						
Project Manager				1/23		23
Project Engineers						
TOTALS	20	20		3/149	503	692

PROGRESS MILESTONES:

1. Roll-offs on-site.
2. Excavation and transportation of soil to OU-1 landfill complete.
3. (L)-shaped excavation behind coke oven complete.
4. Loaded and shipped 20 loads of non-hazardous soil to Model City, NY (CWM)
5. Shipped two roll-offs of non-hazardous soil to Model City, NY. (CWM)
6. Modular Tank pumping to outfall (Tank #2).

- Total Samples Shipped 5
- Total Volume of Hazardous Soil Shipped None
- Total Volume of Non-Hazardous Soil Shipped 497.68 tons
- Total Volume of Backfill Received None

MORGANTOWN ORDNANCE WORKS OU-2 REMOVAL ACTION
WEEKLY FIELD ACTIVITY REPORT
(Continued)

Week Ending 5-2-97

DETAILED LABOR FORCE

	Sunday	Monday	Tuesday	Wednesday	Thursday	Friday	Saturday
ICF Kaiser							
Project Manager							
Project Engineer							
H&S Officer		1/10		1/10	1/10		
Remco							
Project Manager				1/10		1/13	
Site Manager		1/10	1/10	1/10	1/10	1/13	
Technician		1/10	1/10	1/10	1/10	1/13	
On-Site Environmental							
Laborers		6/60	6/60	6/60	6/60	6/60	
Operators		1/10	1/10	1/10	1/10	1/13	
Tri-Ad Surveyors							
Surveyors							
W&K Trucking							
Drivers		2/20	2/20	2/20	2/20	2/20	
Stuber							
Operators		1/10	1/10	1/10	1/10	1/10	
Nashville ACOE							
Representative(s)			1/10	1/10			
USEPA							
Representative(s)				1/10	1/10		

RECAP

	Sunday	Monday	Tuesday	Wednesday	Thursday	Friday	Saturday
ACOE			10	10			
USEPA				10	10		
ICF Kaiser		10		10	10		
REMCO		20	20	30	20	39	
Subtotal		30	30	60	40	39	
Contractors		100	100	100	100	103	
TOTAL		130	130	160	140	142	

MORGANTOWN ORDNANCE WORKS OU-2 REMOVAL ACTION
WEEKLY FIELD ACTIVITY REPORT
(Continued)

Week Ending 5-2-97

EQUIPMENT

	Sunday	Monday	Tuesday	Wednesday	Thursday	Friday	Saturday	Total
4" Water Pump		1	1	1	1	1		5
3" Water Pump		2	2	2	2	2		10
Pick-Up Truck		2	2	2	2	2		10
Dump Truck		2	2	2	2	2		10
Excavator		1	1	1	1	1		5
F/E Loader		1	1	1	1	1		5
Power Washer		1	1	1	1	1		5
Air Compressor		1	1	1	1	1		5
ModuTanks		2	2	2	2	2		10
Generator		1	1	1	1	1		5
Porta Johns		2	2	2	2	2		10
Office Trailer		1	1	1	1	1		5
Tool Trailer		1	1	1	1	1		5
Skid Steer		1	1	1	1	1		5
Vacuum Truck		1	1	1	1	1		5
Compactor		1	1	1	1	1		5
Torch		1	1	1	1	1		5

MORGANTOWN ORDNANCE WORKS OU-2 REMOVAL ACTION
WEEKLY FIELD ACTIVITY REPORT
(Continued)

Week Ending 5-2-97

Sunday - _____ ___°F Low ___°F High

-- No work.
--
--
--
--

Monday - 4-28-97 50 °F Low 62 °F High

-- Roll-off box on-site.
-- Pumped 44,060 gallons of water from Modular Tank #2 at Coke Oven to outfall.
-- Kohan Trucking on-site.
-- Stuber Supersucker on-site.

Tuesday - 4-29-97 40 °F Low 70 °F High

-- Staging soil at OU-1 landfill.
-- Super sucking sediment from Crane Alley.
-- Finished pumping Modular Tank #2 to outfall.
-- Took samples from roll-offs to be analyzed for total mercury.
-- Mike Crain on-site.

Wednesday - 4-30-97 37 °F Low 70 °F High

-- Mike Crain and Melissa Whittington on-site.
-- Excavating (L)-shaped area and hauling to OU-1 landfill.
-- Loaded two roll-offs with dirt and debris from Crane Alley.
-- Kiln dust on-site.
-- Modular Tank #2 at Coke Oven half full, sample collected.

MORGANTOWN ORDNANCE WORKS OU-2 REMOVAL ACTION
WEEKLY FIELD ACTIVITY REPORT
(Continued)

Week Ending 5-2-97

Thursday - 5-1-97 50 °F Low 55 °F High

-- (L)-shaped area behind Coke Oven/excavation complete.

-- Modular Tank #2 at Coke Oven full, sample collected.

-- Installed silt fence around soil stockpiled in OU-1 landfill.

-- Excavated soil from C-SS-8 transported to OU-1 landfill.

Friday - 5-2-97 40 °F Low 80 °F High

-- Decon Kohan trucks.

-- Load trucks for shipment to Model City, NY (20 trucks & 2 roll-off cans).

-- Crew working in Crane Alley.

Saturday - _____ ___°F Low ___°F High

-- No work.

--

--

--

--

--

--

--

MORGANTOWN ORDNANCE WORKS OU-2 REMOVAL ACTION
WEEKLY FIELD ACTIVITY REPORT
(Continued)

Week Ending 5-2-97

	S	M	T	W	T	F	S	Total
Total Samples Shipped		1	2	1	1			5
Total Tons of Rip-Rap Backfill Received								
Total Tons of Borrow Soil Backfill Received								
Total Tons of 3" Limestone		119.40	29.75					149.15
Total Tons of Sand Backfill Received								
Total Tons of 2A Modified Crusher Run Backfill Received			30.55					30.55
Total Tons of River Gravel Backfill Received								
Total Tons of Hazardous Soil Removed								
Total Tons of Non-Hazardous Soil Removed		330	420	450	450			1,650
Kiln Dust				22.40				22.40
HAZARDOUS SOIL (Tons Leaving Site)								
Main Process Bldg. Hot Spots								
Crane Alley								
Blue Stained Area								
Quench Tower								
Interceptor Sump								
NON-HAZARDOUS SOIL (Tons)								
Main Process Bldg. Hot Spots						383.05		383.05
Crane Alley						21.26		21.26
Blue Stained Area						93.37		93.37
Quench Tower								
Interceptor Sump								

MORGANTOWN ORDNANCE WORKS OU-2 REMOVAL ACTION
WEEKLY FIELD ACTIVITY REPORT
(Continued)

Week Ending 5-9-97

EXECUTIVE SUMMARY

SUMMARY FORCE REPORT (Total Manhours)

	EPA	ACOE	MTC	ICF KE	REMCO	SUBS	TOTAL
Supervision		25			1/50	402	477
Health & Safety					1/50		50
Project Advisor							
Project Manager					1/30		30
Project Engineers				1/10			10
TOTALS		25		1/10	3/130	402	567

PROGRESS MILESTONES:

1. Clearing of Crane Alley floor complete.
2. Shipped approximately 725 tons of soil from Blue Stained Material Areas.
3. Discharged approximately 176,000 gallons of water to outfall.
4.
5.
6.

- Total Samples Shipped 10
- Total Volume of Hazardous Soil Shipped 0
- Total Volume of Non-Hazardous Soil Shipped 752.57 tons
- Total Volume of Backfill Received 1,067.5 tons

MORGANTOWN ORDNANCE WORKS OU-2 REMOVAL ACTION
WEEKLY FIELD ACTIVITY REPORT
(Continued)

Week Ending 5-9-97

DETAILED LABOR FORCE

	Sunday	Monday	Tuesday	Wednesday	Thursday	Friday	Saturday
ICF Kaiser							
Project Manager							
Project Engineer		1/10					
H&S Officer							
Remco							
Project Manager				1/10	1/10	1/10	
Site Manager		1/10	1/10	1/10	1/10	1/10	
Technician		1/10	1/10	1/10	1/10	1/10	
On-Site Environmental							
Laborers		6/60	6/60	6/60	6/60	6/60	
Operators		1/10	1/10	1/10	1/10	1/10	
Tri-Ad Surveyors							
Surveyors		2/20					
W&K Trucking							
Drivers				1/10			
Stuber							
Operators		1/11	1/11				
Nashville ACOE							
Representative(s)		1/10	1/10	1/5			
USEPA							
Representative(s)							

RECAP

	Sunday	Monday	Tuesday	Wednesday	Thursday	Friday	Saturday
ACOE		1/10	1/10	1/5			
USEPA							
ICF Kaiser		1/10					
REMCO		2/20	2/20	3/30	3/30	3/30	
Subtotal		40	30	35	30	30	
Contractors		101	81	80	70	70	
TOTAL		141	111	115	100	100	

MORGANTOWN ORDNANCE WORKS OU-2 REMOVAL ACTION
WEEKLY FIELD ACTIVITY REPORT
(Continued)

Week Ending 5-9-97

EQUIPMENT

	Sunday	Monday	Tuesday	Wednesday	Thursday	Friday	Saturday	Total
4" Water Pump		1	1	1	1	1		5
3" Water Pump		2	2	2	2	2		10
Pick-Up Truck		2	2	2	2	2		10
Dump Truck				1	1	1		3
Excavator		1	1	1	1	1		5
F/E Loader		1	1	1	1	1		5
Power Washer		1	1					2
Air Compressor								
ModuTanks		2	2	2	2	2		10
Generator		1	1	1	1	1		5
Porta Johns		2	2	2	2	2		10
Office Trailer		1	1	1	1	1		5
Tool Trailer		1	1	1	1	1		5
Skid Steer		1	1	1	1	1		5
Vacuum Truck		1	1					2
Compactor		1	1	1	1	1		5
Torch		1	1	1	1	1		5

MORGANTOWN ORDNANCE WORKS OU-2 REMOVAL ACTION
WEEKLY FIELD ACTIVITY REPORT
(Continued)

Week Ending 5-9-97

Sunday - _____ ___°F Low ___°F High

-- No work.

Monday - 5-5-97 43 °F Low 68 °F High

-- Cecchett and Thompson collected base confirmatory samples from (L)-shaped excavation.
-- Hot Spots 1, 4, and 8 backfilled.
-- C-SS-11 soil shipped to landfill; excavation complete.
-- Backfill material stockpiled at (L)-shaped excavation and C-SED-3

Tuesday - 5-6-97 55 °F Low 65 °F High

-- Completed shipping soils from C-SED-3 to Model City, NY.
-- Deconed Stuber truck and shipped off-site.
-- Deconed bucket of excavator.

Wednesday - 5-7-97 45 °F Low 65 °F High

-- Stockpiled soils from Utility Corridors and covered for off-site disposal.
-- Finished pumping coke oven Modular Tank #2 to discharge outfall.
-- Cleaning and grubbing completed at Quench Tower.

Thursday - 5-8-97 43 °F Low 56 °F High

-- Completed backfilling of Hot Spots 1, 4, and 8.
-- All openings on Hot Spot #2 floor have been sealed with concrete
-- Completed concrete sealing of all openings at Hot Spot #2 floor
-- Utility Corridor doorways are 80% complete forming for concrete.

Friday - 5-9-97 47 °F Low 57 °F High

-- Utility corridor #1 doorways pumped with concrete.
-- Pumping sump at C-SED-3 and floor of utility corridor #2.

MORGANTOWN ORDNANCE WORKS OU-2 REMOVAL ACTION
WEEKLY FIELD ACTIVITY REPORT
(Continued)

Week Ending 5-9-97

Saturday - _____ ___°F Low ___°F High

-- No work.

--

MORGANTOWN ORDNANCE WORKS OU-2 REMOVAL ACTION
WEEKLY FIELD ACTIVITY REPORT
(Continued)

Week Ending 5-9-97

	S	M	T	W	T	F	S	Total
Total Samples Shipped		8			2			10
Total Tons of Rip-Rap Backfill Received								
Total Tons of Borrow Soil Backfill Received					152.6			152.6
Total Tons of 3" Limestone								
Total Tons of Sand Backfill Received		713.6		171.6				885.2
Total Tons of 2A Modified Crusher Run Backfill Received		29.7						29.7
Total Tons of River Gravel Backfill Received								
Total Tons of Hazardous Soil Removed								
Total Tons of Non-Hazardous Soil Removed		402.21	322.6					724.81
HAZARDOUS SOIL (Tons Leaving Site)								
Main Process Bldg. Hot Spots								
Crane Alley								
Blue Stained Area								
Quench Tower								
Interceptor Sump								
NON-HAZARDOUS SOIL (Tons)								
Main Process Bldg. Hot Spots								
Crane Alley		27.76						27.76
Blue Stained Area		402.21	322.6					724.81
Quench Tower								
Eastern Sumps								
Western Sumps								
GALLONS OF WATER PUMPED								
Main Process Building Modutank				79,848				79,848
Coke Oven Battery Modutank					96,316			96,316

ORIGINAL (Red)

MORGANTOWN ORDNANCE WORKS OU-2 REMOVAL ACTION
WEEKLY FIELD ACTIVITY REPORT
(Continued)

Week Ending 5-16-97

EXECUTIVE SUMMARY

SUMMARY FORCE REPORT (Total Manhours)

	EPA	ACOE	MTC	ICF KE	REMCO	SUBS	TOTAL
Supervision	___	1	___	1/11	1/22	7/350	383
Health & Safety	___	___	___	1/50	___	___	50
Project Advisor	___	___	___	___	1/38	___	38
Project Manager	___	___	___	___	1/34	___	34
Project Engineers	___	___	___	___	___	___	___
TOTALS	___	1	___	2/61	3/94	7/350	505

PROGRESS MILESTONES:

1. Soil cover & seed cover of soil at OU-1 Landfill completed.
2. Pump pit water removed.
3. Zones A-G 90% complete (backfill).
4. Initiated work on Quench Tower.
5. Debris & metal removal from non-PCB contaminated side of Crane Alley sump/trench.
6. Backfilled and sealed Utility Corridors 1 and 2.

- Total Samples Shipped 2
- Total Volume of Hazardous Soil Shipped 0
- Total Volume of Non-Hazardous Soil Shipped 65 ton
- Total Volume of Backfill Received 1,782.70

MORGANTOWN ORDNANCE WORKS OU-2 REMOVAL ACTION
WEEKLY FIELD ACTIVITY REPORT
(Continued)

Week Ending 5-16-97

DETAILED LABOR FORCE

	Sunday	Monday	Tuesday	Wednesday	Thursday	Friday	Saturday
ICF Kaiser							
Project Manager				1/11			
Project Engineer							
H&S Officer		1/10	1/10	1/10	1/10	1/10	
Remco							
Project Manager				1/10	1/10	1/6	1/8
Site Manager		1/11	1/11				
Project Advisor		1/11	1/11	1/11	1/5		
On-Site Environmental							
Laborers		6/60	6/60	6/60	6/60	6/60	
Operators		1/10	1/10	1/10	1/10	1/10	
Tri-Ad Surveyors							
Surveyors							
W&K Trucking							
Drivers							
Stuber							
Operators							
Nashville ACOE							
Representative(s)				1/11	1/11	1/6	
USEPA							
Representative(s)							

RECAP

	Sunday	Monday	Tuesday	Wednesday	Thursday	Friday	Saturday
ACOE				1/11	1/11	1/6	
USEPA							
ICF Kaiser		1/10	1/10	2/21	1/10	1/10	
REMCO		2/22	2/22	2/21	2/15	1/6	1/8
Subtotal		3/32	3/32	5/53	4/36	3/22	1/8
Contractors		7/70	7/70	7/70	7/70	7/70	
TOTAL		10/102	10/102	12/123	11/106	10/92	1/8

MORGANTOWN ORDNANCE WORKS OU-2 REMOVAL ACTION
WEEKLY FIELD ACTIVITY REPORT
(Continued)

Week Ending 5-16-97

EQUIPMENT

	Sunday	Monday	Tuesday	Wednesday	Thursday	Friday	Saturday	Total
4" Water Pump		1	1	1	1	1		5
3" Water Pump		2	2	2	2	2		10
Pick-Up Truck		2	2	2	2	2		10
Excavator		1	1	2	2	2		8
F/E Loader		1	1	1	1	1		5
Power Washer						1	1	2
Air Compressor								
ModuTanks		2	2	2	2	2		10
Generator		1	1	1	1	1		5
Porta Johns		2	2	2	2	2		10
Office Trailer		1	1	1	1	1		5
Tool Trailer		1	1	1	1	1		5
Skid Steer		1	1	1	1	1		5
Vacuum Truck								
Compactor		1	1	1	1	1		5
Torch		1	1	1	1	1		5

MORGANTOWN ORDNANCE WORKS OU-2 REMOVAL ACTION
WEEKLY FIELD ACTIVITY REPORT
(Continued)

Week Ending 5-16-97

Sunday - _____ ___°F Low ___°F High

-- No work

--

--

--

Monday - 5-12-97 40 °F Low 58 °F High

-- Covered OU-1 staged soil with dirt, mulched & seeded.

-- Shipped four roll-off containers to Model City, NY.

--

--

--

--

Tuesday - 5-13-97 42 °F Low 62 °F High

-- Sealed Utility Corridor openings 1 and 2 manways with concrete.

-- Backfilled Utility Corridors 1 and 2.

--

--

--

Wednesday - 5-14-97 40 °F Low 60 °F High

-- Sampled Modular Tanks 1 & 2, mini-excavator arrives.

-- Lowered mini-excavator into Crane Alley.

-- 162.65 tons of soil (borrow) hauled to "L" shaped area.

-- Backfilling of Zones A-G.

-- 4 Roll-offs out - total debris/dirt = 64.525 tons to CWM in Model City, NY.

-- Burned off metal in Crane Alley/Coke Ovens

-- Pumped water from pump pit.

MORGANTOWN ORDNANCE WORKS OU-2 REMOVAL ACTION
WEEKLY FIELD ACTIVITY REPORT
(Continued)

Week Ending 5-16-97

Thursday - 5-15-97 47 °F Low 60 °F High

-- Removed metal and debris from non-PCB contaminated side of Crane Alley sump/trench.
-- Graded Zones A-G area, hauled in dirt & sand.
-- Removed water from Quench Tower sump.
-- Removed water from Sump #11.
-- Deconned Roller (ready to send off-site).
-- Graded around Utility Corridor.
--
--

Friday - 5-16-97 47 °F Low 60 °F High

-- Deconned east side of Crane Alley walkway.
-- Pumped water from Sump #11.
-- Cleaned leaves and debris from Quench Tower sump.
-- Pressure washed top half of Quench Tower sump.
--
--
--

Saturday - 5-17-97 48 °F Low 65 °F High

-- Hauled in two loads of kiln dust.
-- Repaired fencing.
--
--
--
--
--
--

ORIGINAL (Red)

MORGANTOWN ORDNANCE WORKS OU-2 REMOVAL ACTION
WEEKLY FIELD ACTIVITY REPORT
(Continued)

Week Ending 5-16-97

	S	M	T	W	T	F	S	Total
Total Samples Shipped				2				2
Total Tons of Rip-Rap Backfill Received								
Total Tons of Borrow Soil Backfill Received		386.5		162.65	220.75	73.2		843.1
Total Tons of 3" Limestone								
Total Tons of Sand Backfill Received		236.75	276.56		164.05	237		914.36
Kiln Dust (TNS)							25.24	25.24
Concrete (CY)			12					12
Total Tons of Hazardous Soil Removed								
Total Tons of Non-Hazardous Soil Removed			64.525					64.525

HAZARDOUS SOIL (Tons Leaving Site)

Main Process Bldg. Hot Spots			COMPLETED					
Crane Alley								
Blue Stained Area			COMPLETED					
Quench Tower								
Interceptor Sump								

NON-HAZARDOUS SOIL (Tons)

Main Process Bldg. Hot Spots			COMPLETED					
Crane Alley								
Blue Stained Area								
Quench Tower			COMPLETED					
Interceptor Sump				64.525				64.525
Utility Corridors (Sediment)								

MORGANTOWN ORDNANCE WORKS OU-2 REMOVAL ACTION
WEEKLY FIELD ACTIVITY REPORT
(Continued)

Week Ending 5-23-97

EXECUTIVE SUMMARY

SUMMARY FORCE REPORT (Total Manhours)

	EPA	ACOE	MTC	ICF KE	REMCO	SUBS	TOTAL
Supervision	___	___	___	___	1/53.5	___	53.5
Health & Safety	___	___	___	1/50	___	___	50
Project Advisor	___	17	___	___	___	___	17
Project Manager	___	___	___	___	1/28	___	28
Project Engineers	___	___	___	___	___	408.5	408.5
TOTALS	___	17	___	1/50	2/81.5	408.5	557

PROGRESS MILESTONES:

1. Built walkway in Crane Alley settling basin.
2. One-third trench in Crane Alley stabilized.
3. Pumped Southern Sump into Quench Tower pit.
4. Eastern pits 13 & 14 pumped, cleaned, and backfilled.
5. Southern Blue Material Area (C-SS-11) backfilled & seeded.
6. Pumped 95,700 gallons from Modular Tank #1

- Total Samples Shipped 5
- Total Volume of Hazardous Soil Shipped 0
- Total Volume of Non-Hazardous Soil Shipped 106.21
- Total Volume of Backfill Received 724.03

MORGANTOWN ORDNANCE WORKS OU-2 REMOVAL ACTION
WEEKLY FIELD ACTIVITY REPORT
(Continued)

Week Ending 5-23-97

DETAILED LABOR FORCE

	Sunday	Monday	Tuesday	Wednesday	Thursday	Friday	Saturday
ICF Kaiser							
Project Manager							
Project Engineer							
H&S Officer		1/10	1/10	1/10	1/10	1/10	
Remco							
Project Manager	1/6	1/10			1/6	1/6	
Site Manager		1/10	1/10	1/10	1/13.5	1/10	
Technician							
On-Site Environmental							
Laborers		6/60	6/60	6/60	6/60	6/60	
Operators	1/6	1/10	1/10	1/10	1/13.5	1/10	
Tri-Ad Surveyors							
Surveyors							
W&K Trucking							
Drivers							
Stuber							
Operators			1/11	1/11	1/11	1/6	
Nashville ACOE							
Representative(s)				1/5	1/12		
USEPA							
Representative(s)							

RECAP

	Sunday	Monday	Tuesday	Wednesday	Thursday	Friday	Saturday
ACOE				1/5	1/12		
USEPA							
ICF Kaiser		1/10	1/10	1/10	1/10	1/10	
REMCO	1/6	2/20	1/10	1/10	2/19.5	2/16	
Subtotal	1/6	3/30	2/20	3/25	3/41.5	3/26	
Contractors	1/6	7/70	7/70	7/70	7/84.5	8/76	
TOTAL	2/12	10/100	9/90	10/95	10/126	11/102	

MORGANTOWN ORDNANCE WORKS OU-2 REMOVAL ACTION
WEEKLY FIELD ACTIVITY REPORT
(Continued)

Week Ending 5-23-97

EQUIPMENT

	Sunday	Monday	Tuesday	Wednesday	Thursday	Friday	Saturday	Total
4" Water Pump		1	1	1	1	1		5
3" Water Pump		2	2	2	2	2		10
Pick-Up Truck		2	2	2	2	2		10
Dump Truck								
Excavator		2	2	2	2	2		10
F/E Loader		1	1	1	1	1		5
Power Washer		1	1	1	1	1		5
Air Compressor								
ModuTanks		2	2	2	2	2		10
Generator		1	1	1	1	1		5
Porta Johns		2	2	2	2	2		10
Office Trailer		1	1	1	1	1		5
Tool Trailer		1	1	1	1	1		5
Skid Steer		1	1	1	1	1		5
Vacuum Truck			1	1		1		3
Compactor								
Torch		1	1	1	1	1		5

MORGANTOWN ORDNANCE WORKS OU-2 REMOVAL ACTION
WEEKLY FIELD ACTIVITY REPORT
(Continued)

Week Ending 5-23-97

Sunday - 5-18-97 ___°F Low ___°F High

-- Pumped water from Western Sumps.

--

Monday - 5-19-97 60 °F Low 84 °F High

-- Built walkway in Settling Basin.

-- Southern Blue Stained Material Area (C-SS-11) backfilled, seeded, and mulched.

-- Samples collected from Modular Tank #1 and #2.

--

Tuesday - 5-20-97 50 °F Low 65 °F High

-- Stabilized one-third of Crane Alley sump/trench.

-- Shipped three roll-offs with soil and debris from Utility Corridors.

--

Wednesday - 5-21-97 50 °F Low 65 °F High

-- Pumped water from Southern Sump into Quench Tower pit.

-- Pulled large pieces of scrap iron out of Crane Alley sump/trench on PCB contaminated side.

-- One load of kiln dust delivered on-site.

--

Thursday - 5-22-97 39 °F Low 60 °F High

-- Eastern Sumps 13 and 14 cleaned out and backfilled.

-- Cut scrap iron into smaller pieces.

-- Deconed dozer.

-- Discharged 95,700 gallons of water from Modular Tank #1.

--

ORIGINAL

MORGANTOWN ORDNANCE WORKS OU-2 REMOVAL ACTION
WEEKLY FIELD ACTIVITY REPORT
(Continued)

Week Ending 5-23-97

Friday - 5-23-97 40 °F Low 68 °F High

-- Pumping water from Pump Pit and Crane Alley sump/trench.

-- Sucking out sediment from non-PCB contaminated side of Crane Alley sump/trench.

-- Shipped 3 dump trailers of non-hazardous lead soil.

-- Shipped 1 roll-off from Crane Alley.

--

Saturday - _____ ___°F Low ___°F High

-- No work.

--

ORIGINAL

MORGANTOWN ORDNANCE WORKS OU-2 REMOVAL ACTION
WEEKLY FIELD ACTIVITY REPORT
(Continued)

Week Ending 5-23-97

	S	M	T	W	T	F	S	Total
Total Samples Shipped		2				3		5
Total Tons of Rip-Rap Backfill Received								
Total Tons of Borrow Soil Backfill Received		337.60	115.15		55.9			508.65
Total Tons of 3" Limestone (Kiln Dust)				13.27		20.02		33.29
Total Tons of Sand Backfill Received		59.40	32.65		90.4			182.45
Total Tons of 2A Modified Crusher Run Backfill Received								
Total Tons of River Gravel Backfill Received								
Total Tons of Hazardous Soil Removed								
Total Tons of Non-Hazardous Soil Removed			50.48			56.33		106.81
HAZARDOUS SOIL (Tons Leaving Site)								
Main Process Bldg. Hot Spots								
Crane Alley								
Blue Stained Area								
Quench Tower								
Interceptor Sump								
NON-HAZARDOUS SOIL (Tons)								
Main Process Bldg. Hot Spots								
Crane Alley						13.52		13.52
Blue Stained Area								
Quench Tower						23.69		23.69
Interceptor Sump			5					5
Utility Corridor			45.48					45.48
Sump Pit #2						19.12		19.12

ORIGINAL (Red)

MORGANTOWN ORDNANCE WORKS OU-2 REMOVAL ACTION
WEEKLY FIELD ACTIVITY REPORT
(Continued)

Week Ending 5-31-97

EXECUTIVE SUMMARY

SUMMARY FORCE REPORT (Total Manhours)

	EPA	ACOE	MTC	ICF KE	REMCO	SUBS	TOTAL
Supervision		16			65	423	504
Health & Safety				33			33
Project Advisor							
Project Manager					36		
Project Engineers							
TOTALS		16		33	101	423	573

PROGRESS MILESTONES:

1. Removal of non-PCB contaminated sediment from Crane Alley sump/trench complete.
2. Removal of PCB-contaminated sediment from Crane Alley sump/trench complete.
3. Western sump backfilling completed.
4.
5.
6.

- Total Samples Shipped 7
- Total Volume of Hazardous Soil Shipped 71.24 tons
- Total Volume of Non-Hazardous Soil Shipped 141.37 tons
- Total Volume of Backfill Received 677.6 tons
- Total Volume of Kiln Dust 46.32 tons

ORIGINAL

MORGANTOWN ORDNANCE WORKS OU-2 REMOVAL ACTION
WEEKLY FIELD ACTIVITY REPORT
(Continued)

Week Ending 5-31-97

DETAILED LABOR FORCE

	Sunday	Monday	Tuesday	Wednesday	Thursday	Friday	Saturday
ICF Kaiser							
Project Manager							
Project Engineer							
H&S Officer			1/11	1/11	1/11		
Remco							
Project Manager				1/11		1/11	1/14
Site Manager		1/6	1/11	1/11	1/11	1/11	1/15
Technician							
On-Site Environmental							
Laborers			6/66	6/66	6/66	6/66	6/78
Operators		1/6	1/11	1/7			1/14
Tri-Ad Surveyors							
Surveyors							
W&K Trucking							
Drivers							
Stuber							
Operators			1/11	1/11	1/8		1/13
Nashville ACOE							
Representative(s)					1/8	1/8	
USEPA							
Representative(s)							

RECAP

	Sunday	Monday	Tuesday	Wednesday	Thursday	Friday	Saturday
ACOE					1/8	1/8	
USEPA							
ICF Kaiser			1/11	1/11	1/11		
REMCO		1/6	1/11	2/22	1/11	2/22	2/29
Subtotal		1/6	2/22	3/33	3/30	3/30	2/29
Contractors		1/6	8/88	8/84	7/74	6/66	8/105
TOTAL		2/12	12/110	11/117	10/104	9/96	10/134

MORGANTOWN ORDNANCE WORKS OU-2 REMOVAL ACTION
WEEKLY FIELD ACTIVITY REPORT
(Continued)

Week Ending 5-31-97

EQUIPMENT

	Sunday	Monday	Tuesday	Wednesday	Thursday	Friday	Saturday	Total
4" Water Pump			1	1	1	1	1	5
3" Water Pump			2	2	2	2	2	10
Pick-Up Truck			2	2	2	2	2	10
Dump Truck								
Excavator			2	2	2	2	2	10
F/E Loader			1	1	1	1	1	5
Power Washer			1	1	1	1	1	5
Air Compressor								
ModuTanks			2	2	2	2	2	10
Generator			1	1	1	1	1	5
Porta Johns			2	2	2	2	2	10
Office Trailer			1	1	1	1	1	5
Tool Trailer			1	1	1	1	1	5
Skid Steer			1	1	1	1	1	5
Vacuum Truck			1	1	1	1	1	5
Compactor								
Torch			1	1	1	1	1	5

MORGANTOWN ORDNANCE WORKS OU-2 REMOVAL ACTION
WEEKLY FIELD ACTIVITY REPORT
(Continued)

Week Ending 5-31-97

Sunday - 5-25-97 ___°F Low ___°F High

-- No work.

--

Monday - 5-26-97 50 °F Low 79 °F High

-- Pumping water out of Crane Alley sump/trench into Modular Tank #1

--

Tuesday - 5-27-97 50 °F Low 78 °F High

-- Pumped 98,633 gallons from Modular Tank #2. Discharged 87,892 gallons from Modular Tank #1.

-- Completed sediment removal from Settling Basin at Crane Alley pump pit.

Wednesday - 5-28-97 59 °F Low 80 °F High

-- Shipped three roll-offs to Model City, NY.

-- Loaded and stabilized two additional roll-offs.

-- Continued sucking sediment non-PCB contaminated side of from Crane Alley sump/trench.

-- Pressure washed floor on west side of Crane Alley sump/trench.

Thursday - 5-29-97 57 °F Low 64 °F High

-- Pressure washed Crane Alley sump/trench on non-PCB contaminated side.

-- Sediment removal from non-PCB side of Crane Alley sump/trench complete.

-- Shipped two roll-offs to Model City, NY

-- One load of kiln dust delivered to Site.

Friday - 5-30-97 60 °F Low 76 °F High

-- Pumped water from Settling Basin (PCB-contaminated side of Crane Alley sump/trench).

-- Pumped water from Quench Tower pit.

-- Removed debris from PCB-contaminated side of Crane Alley sump/trench.

MORGANTOWN ORDNANCE WORKS OU-2 REMOVAL ACTION
WEEKLY FIELD ACTIVITY REPORT
(Continued)

Week Ending 5-31-97

Saturday - 5-31-97 57 °F Low 70 °F High

-- Removed water and sediment and backfilled Western Pits 17, 18, 19, and 20

-- Removed sediment from PCB-contaminated side of Crane Alley sump/trench.

-- Shipped four roll-offs of PCB-contaminated sediment to Port Arthur, Texas.

MORGANTOWN ORDNANCE WORKS OU-2 REMOVAL ACTION
WEEKLY FIELD ACTIVITY REPORT
(Continued)

Week Ending 5-31-97

	S	M	T	W	T	F	S	Total
Total Samples Shipped				2	1	4		7
Total Tons of Rip-Rap Backfill Received								
Total Tons of Borrow Soil Backfill Received								
Total Tons of 3" Limestone								
Total Tons of Sand Backfill Received						677.6		677.6
Total Tons of 2A Modified Crusher Run Backfill Received								
Total Tons of River Gravel Backfill Received						71.24		71.24
Total Tons of Hazardous Soil Removed				49.28	57.86	34.23		141.37
Total Tons of Non-Hazardous Soil Removed								
Total Tons of Non-Hazardous Soil Removed								
Total Tons of Kiln Dust					10.95		35.37	46.32
HAZARDOUS SOIL (Tons Leaving Site)								
Main Process Bldg. Hot Spots								
Crane Alley							71.24	71.24
Blue Stained Area								
Quench Tower								
Interceptor Sump								
NON-HAZARDOUS SOIL (Tons)								
Main Process Bldg. Hot Spots				49.28	57.86	34.23		141.37
Crane Alley								
Blue Stained Area								
Quench Tower								
Interceptor Sump								

MORGANTOWN ORDNANCE WORKS OU-2 REMOVAL ACTION
WEEKLY FIELD ACTIVITY REPORT
(Continued)

Week Ending 6-7-97

EXECUTIVE SUMMARY

SUMMARY FORCE REPORT (Total Manhours)

	EPA	ACOE	MTC	ICF KE	REMCO	SUBS	TOTAL
Supervision		17			50	294	361
Health & Safety				50			50
Project Advisor							
Project Manager							
Project Engineers							
TOTALS		17		50	50	294	411

PROGRESS MILESTONES:

1.
2.
3.
4.
5.
6.

- Total Samples Shipped 5
- Total Volume of Hazardous Soil Shipped 0
- Total Volume of Non-Hazardous Soil Shipped 32.25 tons
- Total Volume of Backfill Received 290.32 tons

MORGANTOWN ORDNANCE WORKS OU-2 REMOVAL ACTION
WEEKLY FIELD ACTIVITY REPORT
(Continued)

Week Ending 6-7-97

DETAILED LABOR FORCE

	Sunday	Monday	Tuesday	Wednesday	Thursday	Friday	Saturday
ICF Kaiser							
Project Manager							
Project Engineer							
H&S Officer		1/11	1/11	1/11	1/11	1/6	
Remco							
Project Manager							
Site Manager		1/11	1/11	1/11	1/11	1/6	
Technician							
On-Site Environmental							
Laborers		6/66	6/66	4/44	4/44	4/24	
Operators		1/11	1/11	1/11	1/11	1/6	
Tri-Ad Surveyors							
Surveyors							
W&K Trucking							
Drivers							
Stuber							
Operators							
Nashville ACOE							
Representative(s)					1/11	1/6	
USEPA							
Representative(s)							

RECAP

	Sunday	Monday	Tuesday	Wednesday	Thursday	Friday	Saturday
ACOE					1/11	1/6	
USEPA							
ICF Kaiser		1/11	1/11	1/11	1/11	1/6	
REMCO		1/11	1/11	1/11	1/11	1/6	
Subtotal		2/22	2/22	2/22	3/33	3/18	
Contractors		7/77	7/77	5/55	5/55	5/30	
TOTAL		9/99	9/99	7/77	8/88	8/48	

MORGANTOWN ORDNANCE WORKS OU-2 REMOVAL ACTION
WEEKLY FIELD ACTIVITY REPORT
(Continued)

Week Ending 6-7-97

EQUIPMENT

	Sunday	Monday	Tuesday	Wednesday	Thursday	Friday	Saturday	Total
4" Water Pump		1	1	1	1	1		5
3" Water Pump		2	2	2	2	2		10
Pick-Up Truck		2	2	2	2	2		10
Dump Truck								
Excavator		2	2	2	2	2		10
F/E Loader		1	1	1	1	1		5
Power Washer		1	1	1	1	1		5
Air Compressor								
ModuTanks		2	2	2	2	2		10
Generator		1	1	1	1	1		5
Porta Johns		2	2	2	2	2		10
Office Trailer		1	1	1	1	1		5
Tool Trailer		1	1	1	1	1		5
Skid Steer		1	1	1	1	1		5
Vacuum Truck								
Compactor								
Torch		1	1	1	1	1		5

ORIGINAL
(Red)

MORGANTOWN ORDNANCE WORKS OU-2 REMOVAL ACTION
WEEKLY FIELD ACTIVITY REPORT
(Continued)

Week Ending 6-7-97

Sunday - June 1, 1997 ___°F Low ___°F High

-- No work.

--

Monday - June 2, 1997 40 °F Low 65 °F High

-- Finished final grading of Western Sumps #17, 18, 19, and 20.

-- Sealed two pipes in non-PCB contaminated side of Crane Alley sump/trench.

-- Pressure washing floor of Crane Alley sump/trench.

-- Removing debris from PCB-contaminated side of Crane Alley sump/trench.

Tuesday - June 3, 1997 55 °F Low 58 °F High

-- Finished pressure washing floor in Crane Alley PCB side.

-- Plugs being constructed for Crane Alley sump/trench and Pump Pit openings.

-- Sealed two openings on non-PCB contaminated side of Crane Alley sump/trench.

Wednesday - June 4, 1997 55 °F Low 74 °F High

-- Continued stabilizing Quench Tower Pit sediment.

-- Shipped one roll-off to CWM in Model City, NY.

-- Plates installed in doorways of Utility Corridor #3.

Thursday - June 5, 1997 56 °F Low 72 °F High

-- Continued backfilling Utility Corridor #3.

-- Completed sealing of pipe in the tunnel between the Crane Alley sump/trench and Pump Pit.

-- Deconed mini excavator and skid loader and collected PCB wipe sample.

-- Shipped three drums containing non-hazardous soil from diesel spill to CWM. (Spill occurred on Friday, May 30, 1997.)

-- Shipped one roll-off to CWM.

ORIGINAL (Red)

MORGANTOWN ORDNANCE WORKS OU-2 REMOVAL ACTION
WEEKLY FIELD ACTIVITY REPORT
(Continued)

Week Ending 6-7-97

Friday - June 6, 1997 56 °F Low 72 °F High

-- Finished backfilling Utility Corridor #3.

-- Removing debris from Southern Sump.

--

Saturday - June 7, 1997 ___°F Low ___°F High

-- No work.

--

MORGANTOWN ORDNANCE WORKS OU-2 REMOVAL ACTION
WEEKLY FIELD ACTIVITY REPORT
(Continued)

Week Ending 6-7-97

	S	M	T	W	T	F	S	Total
Total Samples Shipped		3			2			5
Total Tons of Rip-Rap Backfill Received								
Total Tons of Borrow Soil Backfill Received								
Total Tons of 3" Limestone								
Total Tons of Sand Backfill Received					87.2			87.2
Total Tons of 2A Modified Crusher Run Backfill Received					53.6			53.6
Total Tons of River Gravel Backfill Received					66.55			66.55
Total Tons of Hazardous Soil Removed								
Total Tons of Non-Hazardous Soil Removed				16.5	15.75			32.25
Kiln Dust Delivered				22.32		60.65		82.97
HAZARDOUS SOIL (Tons Leaving Site)								
Main Process Bldg. Hot Spots								
Crane Alley								
Blue Stained Area								
Quench Tower								
Interceptor Sump								
NON-HAZARDOUS SOIL (Tons)								
Main Process Bldg. Hot Spots								
Crane Alley								
Blue Stained Area								
Quench Tower				16.5	15.75			32.25
Interceptor Sump								

MORGANTOWN ORDNANCE WORKS OU-2 REMOVAL ACTION
WEEKLY FIELD ACTIVITY REPORT
(Continued)

Week Ending 6-14-97

EXECUTIVE SUMMARY

SUMMARY FORCE REPORT (Total Manhours)

	EPA	ACOE	MTC	ICF KE	REMCO	SUBS	TOTAL
Supervision		17			69.5	326	412.5
Health & Safety				77.5			77.5
Project Advisor							
Project Manager							
Project Engineers							
TOTALS		17		77.5	69.5	326	490

PROGRESS MILESTONES:

1.
2.
3.
4.
5.
6.

- Total Samples Shipped 4
- Total Volume of Hazardous Soil Shipped 111.16 ton
- Total Volume of Non-Hazardous Soil Shipped 17.52 ton
- Total Volume of Backfill Received 437.15 ton

MORGANTOWN ORDNANCE WORKS OU-2 REMOVAL ACTION
WEEKLY FIELD ACTIVITY REPORT
(Continued)

Week Ending 6-14-97

DETAILED LABOR FORCE

	Sunday	Monday	Tuesday	Wednesday	Thursday	Friday	Saturday
ICF Kaiser							
Project Manager							
Project Engineer			2/20				
H&S Officer		1/13.5	1/13	1/14	1/11	1/6	
Remco							
Project Manager			1/10				
Site Manager		1/13.5	1/15	1/14	1/11	1/6	
Technician							
On-Site Environmental							
Laborers		4/54	4/52	4/56	4/44	4/24	
Operators		1/13.5	1/13	1/14	1/11	1/6	
Tri-Ad Surveyors							
Surveyors							
W&K Trucking							
Drivers							
Stuber							
Operators		1/11.5	1/13	1/14			
Nashville ACOE							
Representative(s)			1/11	1/6			
USEPA							
Representative(s)							

RECAP

	Sunday	Monday	Tuesday	Wednesday	Thursday	Friday	Saturday
ACOE			1/11	1/6			
USEPA							
ICF Kaiser		1/13.5	3/33	1/14	1/11	1/6	
REMCO		1/13.5	2/25	1/14	1/11	1/6	
Subtotal		2/27	5/69	3/34	2/22	2/12	
Contractors		6/79	6/78	6/84	5/55	5/30	
TOTAL		8/106	11/147	9/118	7/77	7/42	

MORGANTOWN ORDNANCE WORKS OU-2 REMOVAL ACTION
WEEKLY FIELD ACTIVITY REPORT
(Continued)

Week Ending 6-14-97

EQUIPMENT

	Sunday	Monday	Tuesday	Wednesday	Thursday	Friday	Saturday	Total
4" Water Pump		1	1	1	1	1		5
3" Water Pump		2	2	2	2	2		10
Pick-Up Truck		2	2	2	2	2		10
Dump Truck								
Excavator		2	2	2	1	1		8
F/E Loader		1	1	1	1	1		5
Power Washer		1	1	1	1	1		5
Air Compressor								
ModuTanks		2	2	2	2	2		10
Generator		1	1	1	1	1		5
Porta Johns		2	2	2	2	2		10
Office Trailer		1	1	1	1	1		5
Tool Trailer		1	1	1	1	1		5
Skid Steer		1	1	1	1	1		5
Vacuum Truck		1	1	1				3
Compactor								
Torch		1	1	1	1	1		5

MORGANTOWN ORDNANCE WORKS OU-2 REMOVAL ACTION
WEEKLY FIELD ACTIVITY REPORT
(Continued)

Week Ending 6-14-97

Sunday - June 8, 1997 ___°F Low ___°F High

-- No work.

Monday - June 9, 1997 59°F Low 77°F High

-- Pumped remaining water from Crane Alley Settling Basin.
-- Pumped, sucked, and cleaned Southern Sump.
-- Collected sample from coke oven Modular Tank #2 for total lead, dissolved lead, and TSS.

Tuesday - June 10, 1997 55°F Low 87°F High

-- Sucking sludge from PCB-contaminated side of Crane Alley Settling Basin.
-- Loaded three roll-offs for shipment to Port Arthur, TX.

Wednesday - June 11, 1997 55°F Low 87°F High

-- Completed removal of sludge from Crane Alley Settling Basin.
-- Pressure washing steel & debris. Pressure washing and sucking water from Settling Basins complete.
-- Collected PCB wipe samples from cyclone, large excavator, and floor of middle Settling Basin in Crane Alley.

Thursday - June 12, 1997 65°F Low 86°F High

-- Sucked benzene contaminated water from Quench Tower into Clean Harbor vac tankers.
-- Pumping water from Eastern Sump #11.
-- Quench Tower backfilled, 50% complete.
-- 14,200 gallons of water shipped off-site to Clean Harbors.

Friday - June 13, 1997 64°F Low 76°F High

-- Completed pumping water from Eastern Sump #11.
-- Discharged 43,900 gallons of water from Coke Oven Modular Tank.
-- Removed dike from Crane Alley sump/trench.
-- Backfilled Eastern Sump #11.

MORGANTOWN ORDNANCE WORKS OU-2 REMOVAL ACTION
WEEKLY FIELD ACTIVITY REPORT
(Continued)

Week Ending 6-14-97

Saturday - June 14, 1997 ___°F Low ___°F High

-- No work.

MORGANTOWN ORDNANCE WORKS OU-2 REMOVAL ACTION
WEEKLY FIELD ACTIVITY REPORT
(Continued)

Week Ending 6-14-97

	S	M	T	W	T	F	S	Total
Total Samples Shipped		1			3			4
Total Tons of Rip-Rap Backfill Received								
Total Tons of Borrow Soil Backfill Received								
Total Tons of 3" Limestone								
Total Tons of Sand Backfill Received			327.85	109.3				437.15
Total Tons of 2A Modified Crusher Run Backfill Received								
Total Tons of River Gravel Backfill Received								
Total Tons of Hazardous Soil Removed		15.57		30.3	12.26			58.13
Total Tons of Non-Hazardous Soil Removed		17.52						17.52
Kiln Dust						15.92		15.92
HAZARDOUS SOIL (Tons Leaving Site)								
Main Process Bldg. Hot Spots								
Crane Alley			53.03	30.3				83.33
Blue Stained Area								
Quench Tower								
Interceptor Sump		15.57		12.26				27.83
Non-Haz Gallons of Water					14,000			14,000
NON-HAZARDOUS SOIL (Tons)								
Main Process Bldg. Hot Spots								
Crane Alley								
Blue Stained Area								
Quench Tower		17.52						17.52
Interceptor Sump								

MORGANTOWN ORDNANCE WORKS OU-2 REMOVAL ACTION
WEEKLY FIELD ACTIVITY REPORT
(Continued)

Week Ending 6-21-97

EXECUTIVE SUMMARY

SUMMARY FORCE REPORT (Total Manhours)

	EPA	ACOE	MTC	ICF KE	REMCO	SUBS	TOTAL
Supervision	5	10			50	256	321
Health & Safety							
Project Advisor							
Project Manager					11		11
Project Engineers							
TOTALS	5	10			61	256	332

PROGRESS MILESTONES:

1. Began demobilization activities.
2.
3.
4.
5.
6.

- Total Samples Shipped 0
- Total Volume of Hazardous Soil Shipped 13.06 Tons
- Total Volume of Non-Hazardous Soil Shipped 0
- Total Volume of Backfill Received 249.5 Tons

MORGANTOWN ORDNANCE WORKS OU-2 REMOVAL ACTION
WEEKLY FIELD ACTIVITY REPORT
(Continued)

Week Ending 6-21-97

DETAILED LABOR FORCE

	Sunday	Monday	Tuesday	Wednesday	Thursday	Friday	Saturday
ICF Kaiser							
Project Manager							
Project Engineer							
H&S Officer							
Remco							
Project Manager			1/11				
Site Manager		1/11	1/11	1/11	1/11	1/6	
Technician							
On-Site Environmental							
Laborers		4/44	4/44	4/44	4/44	4/24	
Operators		1/11	1/11	1/11	1/11	1/6	
Tri-Ad Surveyors							
Surveyors							
W&K Trucking							
Drivers							
Stuber							
Operators							
Nashville ACOE							
Representative(s)			2/10				
USEPA							
Representative(s)			1/5				

RECAP

	Sunday	Monday	Tuesday	Wednesday	Thursday	Friday	Saturday
ACOE			2/10				
USEPA			1/5				
ICF Kaiser							
REMCO		1/11	2/22	1/11	1/11	1/6	
Subtotal		1/11	5/37	1/11	1/11	1/6	
Contractors		5/55	5/55	5/55	5/55	5/36	
TOTAL		6/66	10/92	6/66	6/66	6/42	

MORGANTOWN ORDNANCE WORKS OU-2 REMOVAL ACTION
WEEKLY FIELD ACTIVITY REPORT
(Continued)

Week Ending 6-21-97

EQUIPMENT

	Sunday	Monday	Tuesday	Wednesday	Thursday	Friday	Saturday	Total
4" Water Pump		1	1	1	1	1		5
3" Water Pump		2	2	2	2	2		10
Pick-Up Truck		1	1	1	1	1		5
Dump Truck								
Excavator		1	1	1	1	1		5
F/E Loader		1	1	1	1	1		5
Power Washer		1	1	1	1	1		5
Air Compressor		1	1	1	1	1		5
ModuTanks		2	2	2	2	2		10
Generator		1	1	1	1	1		5
Porta Johns		2	2	2	2	2		10
Office Trailer		1	1	1	1	1		5
Tool Trailer		1	1	1	1	1		5
Skid Steer								
Vacuum Truck								
Compactor								
Torch		1	1	1	1	1		5

MORGANTOWN ORDNANCE WORKS OU-2 REMOVAL ACTION
WEEKLY FIELD ACTIVITY REPORT
(Continued)

Week Ending 6-21-97

Sunday - June 15, 1997 ___°F Low ___°F High

-- No work.

Monday - June 16, 1997 55 °F Low 88 °F High

-- Pipe from Crane Alley being cut into smaller pieces.
-- Liner from Crane Alley Modular Tank cut up and staged on pallet.
-- Water being discharged from Coke Oven Modular Tank.

Tuesday - June 17, 1997 68 °F Low 89 °F High

-- Crane Alley Modular Tank dismantled and staged on pallets.
-- Shipped roll-off to CWM in Sauget, Illinois.
-- USEPA (M. Whittington) and ACOE conduct final walk-through inspection.

Wednesday - June 18, 1997 62 °F Low 80 °F High

-- Steel being prepared for shipment to Steel of West Virginia.
-- Crew begins dismantling Coke Oven Modular Tank.
-- Crews cutting 1/2 mile of 4" PVC pipe.

Thursday - June 19, 1997 73 °F Low 90 °F High

-- Liners & debris from both Crane Alley and Coke Oven Modular Tanks loaded into roll-off.
-- All 4" PVC pipe cut and loaded onto pallets.
-- All areas backfilled as per item on Final Punch List.
-- All steps used for access to work areas removed.

Friday - June 20, 1997 72 °F Low 87 °F High

-- Banding pipe and Modular Tank onto pallets.
-- Dressing up Site.
-- Picking up trash and debris.
-- Shipped steel to Steel of West Virginia.

MORGANTOWN ORDNANCE WORKS OU-2 REMOVAL ACTION
WEEKLY FIELD ACTIVITY REPORT
(Continued)

Week Ending 6-21-97

Saturday - June 21, 1997 ___°F Low ___°F High

-- No work.

MORGANTOWN ORDNANCE WORKS OU-2 REMOVAL ACTION
WEEKLY FIELD ACTIVITY REPORT
(Continued)

Week Ending 6-21-97

	S	M	T	W	T	F	S	Total
Total Samples Shipped								
Total Tons of Rip-Rap Backfill Received								
Total Tons of Borrow Soil Backfill Received								
Total Tons of 3" Limestone								
Total Tons of Sand Backfill Received		249.5						249.5
Total Tons of 2A Modified Crusher Run Backfill Received								
Total Tons of River Gravel Backfill Received								
Total Tons of Hazardous Soil Removed			13.06					13.06
Total Tons of Non-Hazardous Soil Removed								
HAZARDOUS SOIL (Tons Leaving Site)								
Main Process Bldg. Hot Spots								
Crane Alley								
Blue Stained Area								
Quench Tower			13.06					13.06
Interceptor Sump								
NON-HAZARDOUS SOIL (Tons)								
Main Process Bldg. Hot Spots								
Crane Alley								
Blue Stained Area								
Quench Tower								
Interceptor Sump								

MORGANTOWN ORDNANCE WORKS OU-2 REMOVAL ACTION
WEEKLY FIELD ACTIVITY REPORT
(Continued)

Week Ending 6-28-97

EXECUTIVE SUMMARY

SUMMARY FORCE REPORT (Total Manhours)

	EPA	ACOE	MTC	ICF KE	REMCO	SUBS	TOTAL
Supervision		2			29	105	136
Health & Safety							
Project Advisor							
Project Manager							
Project Engineers							
TOTALS		2			29	105	136

PROGRESS MILESTONES:

1.
2.
3.
4.
5.
6.

- Total Samples Shipped 0
- Total Volume of Hazardous Soil Shipped 54.33 tons
- Total Volume of Non-Hazardous Soil Shipped 11.97 tons
- Total Volume of Backfill Received

MORGANTOWN ORDNANCE WORKS OU-2 REMOVAL ACTION
WEEKLY FIELD ACTIVITY REPORT
(Continued)

Week Ending 6-28-97

DETAILED LABOR FORCE

	Sunday	Monday	Tuesday	Wednesday	Thursday	Friday	Saturday
ICF Kaiser							
Project Manager							
Project Engineer							
H&S Officer							
Remco							
Project Manager							
Site Manager		1/11	1/10	1/8			
Technician							
On-Site Environmental							
Laborers		4/44	4/40				
Operators		1/11	1/10				
Tri-Ad Surveyors							
Surveyors							
W&K Trucking							
Drivers							
Stuber							
Operators							
Nashville ACOE							
Representative(s)			1/2				
USEPA							
Representative(s)							

RECAP

	Sunday	Monday	Tuesday	Wednesday	Thursday	Friday	Saturday
ACOE			1/2				
USEPA							
ICF Kaiser							
REMCO		1/11	1/10	1/8			
Subtotal		1/11	2/12	1/8			
Contractors		5/55	5/50				
TOTAL		6/66	7/62	1/8			

MORGANTOWN ORDNANCE WORKS OU-2 REMOVAL ACTION
WEEKLY FIELD ACTIVITY REPORT
(Continued)

Week Ending 6-28-97

EQUIPMENT

	Sunday	Monday	Tuesday	Wednesday	Thursday	Friday	Saturday	Total
4" Water Pump								
3" Water Pump		2						2
Pick-Up Truck		1	1					2
Dump Truck								
Excavator		1						1
F/E Loader		1	1					2
Power Washer		1						1
Air Compressor								
ModuTanks		2						2
Generator								
Porta Johns		2						2
Office Trailer		1						1
Tool Trailer		1						1
Skid Steer								
Vacuum Truck								
Compactor								
Torch		1						1

MORGANTOWN ORDNANCE WORKS OU-2 REMOVAL ACTION
WEEKLY FIELD ACTIVITY REPORT
(Continued)

Week Ending 6-28-97

Sunday - June 22, 1997 ___°F Low ___°F High

-- No work activity.

Monday - June 23, 1997 60 °F Low 89 °F High

-- Shipped Modular Tank back to New York.

-- Shipped three roll-offs to Port Arthur, TX (CA-4103)

-- Shipped 1 roll-off to Model City, New York (CA-4102)

Tuesday - June 24, 1997 70 °F Low 90 °F High

-- Shipped excavator off-site.

-- Relocated tool trailer to Main Process Building Area.

-- Shipped compressor, welder, generator, and 4" pump back to Knickerbocker.

Wednesday - June 25, 1997 ___°F Low ___°F High

-- No work activity.

Thursday - June 26, 1997 ___°F Low ___°F High

-- No work activity.

Friday - June 27, 1997 ___°F Low ___°F High

-- No work activity.

Saturday - June 28, 1997 ___°F Low ___°F High

-- No work activity.

MORGANTOWN ORDNANCE WORKS OU-2 REMOVAL ACTION
WEEKLY FIELD ACTIVITY REPORT
(Continued)

Week Ending 6-28-97

	S	M	T	W	T	F	S	Total
Total Samples Shipped								
Total Tons of Rip-Rap Backfill Received								
Total Tons of Borrow Soil Backfill Received								
Total Tons of 3" Limestone								
Total Tons of Sand Backfill Received								
Total Tons of 2A Modified Crusher Run Backfill Received								
Total Tons of River Gravel Backfill Received								
Total Tons of Hazardous Soil Removed		54.33						54.33
Total Tons of Non-Hazardous Soil Removed		11.97						11.97
HAZARDOUS SOIL (Tons Leaving Site)								
Main Process Bldg. Hot Spots								
Crane Alley		54.33						54.33
Blue Stained Area								
Quench Tower								
Interceptor Sump								
NON-HAZARDOUS SOIL (Tons)								
Main Process Bldg. Hot Spots								
Crane Alley		11.97						11.97
Blue Stained Area								
Quench Tower								
Interceptor Sump								

MORGANTOWN ORDNANCE WORKS OU-2 REMOVAL ACTION
WEEKLY FIELD ACTIVITY REPORT
(Continued)

Week Ending 7-5-97

EXECUTIVE SUMMARY

SUMMARY FORCE REPORT (Total Manhours)

	EPA	ACOE	MTC	ICF KE	REMCO	SUBS	TOTAL
Supervision	___	___	___	___	1/4	___	1/4
Health & Safety	___	___	___	___	___	___	___
Project Advisor	___	___	___	___	___	___	___
Project Manager	___	___	___	___	___	___	___
Project Engineers	___	___	___	___	___	___	___
TOTALS	___	___	___	___	1/4	___	1/4

PROGRESS MILESTONES:

1. Field activities completed.
2.
3.
4.
5.
6.

- Total Samples Shipped 0
- Total Volume of Hazardous Soil Shipped 20.29 Ton
- Total Volume of Non-Hazardous Soil Shipped 0
- Total Volume of Backfill Received 0

MORGANTOWN ORDNANCE WORKS OU-2 REMOVAL ACTION
WEEKLY FIELD ACTIVITY REPORT
(Continued)

Week Ending 7-5-97

DETAILED LABOR FORCE

	Sunday	Monday	Tuesday	Wednesday	Thursday	Friday	Saturday
ICF Kaiser							
Project Manager							
Project Engineer							
H&S Officer							
Remco							
Project Manager							
Site Manager		1/4					
Technician							
On-Site Environmental							
Laborers							
Operators							
Tri-Ad Surveyors							
Surveyors							
W&K Trucking							
Drivers							
Stuber							
Operators							
Nashville ACOE							
Representative(s)							
USEPA							
Representative(s)							

RECAP

	Sunday	Monday	Tuesday	Wednesday	Thursday	Friday	Saturday
ACOE							
USEPA							
ICF Kaiser							
REMCO		1/4					
Subtotal		1/4					
Contractors							
TOTAL		1/4					

MORGANTOWN ORDNANCE WORKS OU-2 REMOVAL ACTION
WEEKLY FIELD ACTIVITY REPORT
(Continued)

Week Ending 7-5-97

EQUIPMENT

	Sunday	Monday	Tuesday	Wednesday	Thursday	Friday	Saturday	Total
4" Water Pump								
3" Water Pump								
Pick-Up Truck								
Dump Truck								
Excavator								
F/E Loader		1						1
Power Washer								
Air Compressor								
ModuTanks								
Generator								
Porta Johns								
Office Trailer								
Tool Trailer								
Skid Steer								
Vacuum Truck								
Compactor								
Torch								

MORGANTOWN ORDNANCE WORKS OU-2 REMOVAL ACTION
WEEKLY FIELD ACTIVITY REPORT
(Continued)

Week Ending 7-5-97

Sunday - June 29, 1997 ___°F Low ___°F High

-- No work activity.

Monday - June 30, 1997 68 °F Low 79°F High

-- Shipped 20.29 tons of PCB contaminated soils to Port Arthur, TX.

-- Loader off-site.

Tuesday - July 1, 1997 ___°F Low ___°F High

-- No work activity.

Wednesday - July 2, 1997 ___°F Low ___°F High

-- No work activity.

Thursday - July 3, 1997 ___°F Low ___°F High

-- No work activity.

Friday - July 4, 1997 ___°F Low ___°F High

-- No work activity.

Saturday - July 5, 1997 ___°F Low ___°F High

-- No work activity.

MORGANTOWN ORDNANCE WORKS OU-2 REMOVAL ACTION
WEEKLY FIELD ACTIVITY REPORT
(Continued)

Week Ending 7-5-97

	S	M	T	W	T	F	S	Total
Total Samples Shipped								
Total Tons of Rip-Rap Backfill Received								
Total Tons of Borrow Soil Backfill Received								
Total Tons of 3" Limestone								
Total Tons of Sand Backfill Received								
Total Tons of 2A Modified Crusher Run Backfill Received								
Total Tons of River Gravel Backfill Received								
Total Tons of Hazardous Soil Removed		20.29						20.29
Total Tons of Non-Hazardous Soil Removed								
HAZARDOUS SOIL (Tons Leaving Site)								
Main Process Bldg. Hot Spots								
Crane Alley		20.29						20.29
Blue Stained Area								
Quench Tower								
Interceptor Sump								
NON-HAZARDOUS SOIL (Tons)								
Main Process Bldg. Hot Spots								
Crane Alley								
Blue Stained Area								
Quench Tower								
Interceptor Sump								

BI-WEEKLY REPORTS

ICF KAISER

ICF KAISER ENGINEERS GROUP

ICF Kaiser Engineers, Inc.
Gateway View Plaza
1600 West Carson Street
Pittsburgh, PA 15219-1031
412/497-2000 Fax 412/497-2212

April 25, 1997

Ms. Melissa Whittington, RPM
General Remedial Section
USEPA Region III, 3HW23
841 Chestnut Building
Philadelphia, PA 19107

Subject: **Response Action at Morgantown Ordnance Works OU-2, Morgantown, WV**
Bi-Weekly Progress Report for the Period April 14 to April 25, 1997

Dear Ms. Whittington:

At the request of the Morgantown PRP Committee ICF Kaiser Engineers, Inc. is submitting the Bi-Weekly Progress report for the above referenced reporting period. This report is being submitted in accordance with the requirements of Section 8.7, of the Administrative Order on Consent for Removal Response Action, Docket No. III-96-68 (the Removal Order). A summary of the work anticipated for the next bi-weekly report is also attached.

Please call me or the Committee (contacts listed below) if you have any questions regarding this report.

Morgantown PRP Committee Contacts

Linda White U.S. Army Corps of Engineers (402) 221-7672	Steve Morrow Olin Corporation (423) 336-4511

Sincerely,

Charles Haefner Jr.

Charles Haefner, Jr., P.G.
Remediation Project Manager

cc: Steve Morrow, Olin
John Burns, Olin
Roger Towe, EPES
Michael Stratton, WVA DEP
Linda White, USACOE
Ken Cooper - USACOE
Doug Taylor, ICF Kaiser
OU-1 PRP Group

66473-154-G

ICF KAISER

BI-WEEKLY REPORT
APRIL 14, 1997 TO APRIL 25, 1997

OU-2 RESPONSE ACTION
MORGANTOWN ORDNANCE WORKS
MORGANTOWN, WV

A. WORK PERFORMED APRIL 14 TO APRIL 25, 1997

- The Committee completed initial excavation of soil hot spots. (Main Process Building Area) 1, 2, 4, 8 and 10.
- The Committee collected confirmation soil samples from soil hot spots 1, 2, 4, 8 and 10. Samples were analyzed for total lead by Lancaster Laboratories, Lancaster, PA.
- The Committee pumped approximately 100,000 gallons from the Crane Alley Sump/Trench and Pump Pit into a Modular Tank located at the Main Process Building Area.
- The Committee collected discharge water samples from the Modular Tank containing water pumped out of the Crane Alley Sump/Trench and Pump Pit. Water samples were obtained when approximately 50,000 gallons were pumped into the Modular Tank and at the conclusion of pumping. Samples were analyzed for TOC, COD, phenols, oil and grease, benzene, Fe, Pb, Mn, Cu, Zn, Hg and Al, PAHs, PCBs, CN, pH, TSS, flourene, chlorides and ammonia-nitrogen.
- The Committee pumped water from sumps and pits located east of the former Coke Oven batteries and from the Utility Trench.
- The Committee collected confirmation sample results from soil hot spots 1, 2, 4 and 8 which indicated additional excavation would be required. Figures 3-4 through 3-9 show these results. An additional 2 feet of soil was removed from hot spots 1, 4 and 8 in the direction of elevated lead concentration.
- The Committee completed excavations associated with the blue-stained material areas (C-SED-3 and C-SED-11).
- The Committee discharged 82,190 gallons to the Monongahela River through the temporary NPDES.
- The Committee backfilled the excavation at soil hot spot M-SS-10.
- The Committee cleared and grubbed trees within the Crane Alley.
- The Committee placed the skid loader and road plates within the Crane Alley.
- The Committee removed sediments and debris from the Pump Pit and eastern sumps (Nos. 3A, 3B, 6 and 10).

- The Committee excavated soils from the 20' x 20' area surrounding C-SS-8 (Zone G) in the Coke Oven/Coke By-Products Area.

B. WORK TO BE PERFORMED APRIL 28 TO MAY 9, 1997

- The Committee will begin excavating the "L-shaped" Area (Zones A-F) located around the former Coke Oven Batteries.
- The Committee will continue pumping water from the Crane Alley Sump/Trench and from the sumps and pits in the Coke Oven/Coke By-Products Area.
- The Committee will continue removing the sediments from the various sumps and pits located in the Coke Oven/Coke By-Products Area.
- The Committee will backfill the sumps and pits located in the Coke Oven/Coke By-Products Area.
- The Committee will begin shipping excavated soil and sediments to the approved landfill facility.
- The Committee will continue to discharge water from the Modular Tanks into the Monongahela River through the NPDES.

C. SUMMARY OF CONCERNS AND THEIR IMPACT ON RESPONSE ACTION ACTIVITIES

- The weather continues to be cold and wet. Implementation and completion of the RAP is not expected to be impacted by the weather conditions.
- Metal debris was observed in the Crane Alley Sump/Trench. This material will not be vacuumed out by the supersucker truck. The debris will be removed using a small excavator located within the Crane Alley. Attachment C provides a summary of the revised implementation procedure. Any impact on the Response Action Plan will be discussed in Section E of this bi-weekly report. A photo of the debris is included as Attachment D.

D. ANALYTICAL DATA RECEIVED

- Soil confirmation samples were obtained from the soil hot spots located in the Main Process Building Area. Samples were obtained from hot spot M-SED-1, M-SED-2, M-SS-4, M-SS-8 and M-SS-10.

- Four water samples were obtained from the two Modular Tanks. Two samples were taken from the Modular Tank located in the Main Process Building Area and five samples were obtained from the tank located at the former Coke Ovens. Chain-of-Custodies and analytical sample results are included in Attachment B.

- Additional confirmation samples were being collected on Thursday, April 24, 1997. Results from those samples will be submitted during the next reporting period.

E. MODIFICATIONS TO RESPONSE ACTION PLAN

- Revision of the procedure to remove sediments/metal debris from the Crane Alley Sump/Trench impacts the Response Action Plan from a scheduling aspect. The schedule of implementing the response action will be increased by approximately 2-3 weeks.

- The initial confirmational sampling associated with Soil Hot Spot M-SED-2 (Main Process Area) indicated elevated concentrations of lead (greater than 1,000 ppm). The procedure outlined in the RAP indicates that the soil will be removed from the location of the elevated lead concentration floor of excavation or sidewall.

  The layout of the M-SED-2 location is as follows. The soil is underlain by a concrete floor. The west side wall is a concrete retaining wall. The south wall is a cement block wall. The eastern wall is the Main Process Building itself.

  The confirmation sample was taken from the north end of the initial excavation. Refer to Figure 3-5 in Attachment A.

  The volume of soil remaining within the M-SED-2 Area, to the end of the concrete pad, is approximately 16 yd^3. The Committee obtained three composite samples of the remaining soil at M-SED-2. The samples were obtained from 40-foot, 80-foot and 120-foot intervals from the original excavation side wall, Figure 3-4. The 40-foot and 80-foot intervals indicated concentrations of lead greater than 2,000 ppm. The 120-foot interval sample located at the end of the concrete pad, indicated a concentration of lead below 1,000 ppm.

  The Committee proposes removing all of the soil overlying the concrete pad. No confirmation sample will be taken from the concrete surface. The Committee will obtain the confirmation sample off the edge of the pad.

  This proposed change to the RAP was presented to the USEPA on Thursday, April 24, 1996. A verbal approval was provided to the Committee. The Committee will perform the excavation activities during the next reporting period.

ATTACHMENT A

JOB NO.: 6647300900 PLOT SCALE: 1=1

STARTED ON: 11/15/96 REVISED: 4/23/97

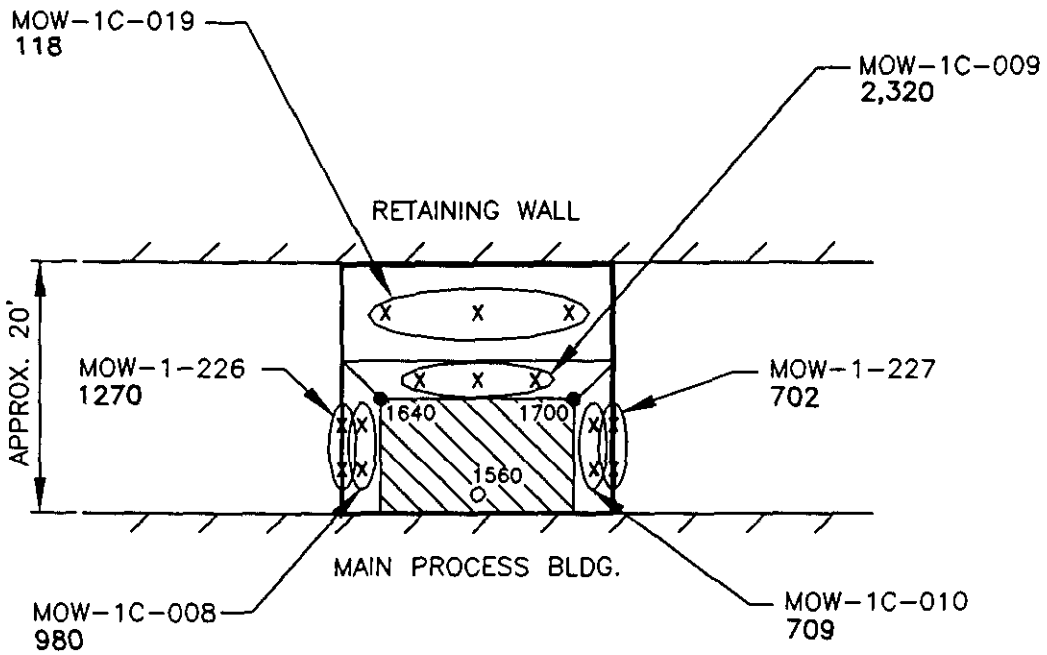

M-SED-1 HOT SPOT

BASE:

MOW-1B-228
69

MOW-1B-228D
14
(FIELD DUPLICATE)

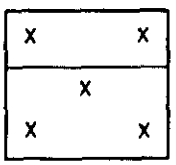

LEGEND:

- o RI SAMPLE LOCATION
- ● PRE-REMOVAL SAMPLE LOCATION
- x GRAB SAMPLE LOCATION
- ▨ ORIGINAL 10' X 5' HOT SPOT

MOW-1C-008 PHASE II COMPOSITE SAMPLE LOCATIONS
2320 TOTAL LEAD DRY WEIGHT CONCENTRATION (mg/kg)

FIGURE 3-4

MORGANTOWN TECHNICAL COMMITTEE MORGANTOWN, WEST VIRGINIA	PRE-EXCAVATION CONFIRMATORY SAMPLING MAIN PROCESS BUILDING AREA	
ICF KAISER ENGINEERS PITTSBURGH, PA	DATE: 11/15/96	DR.: B. SNYDER
	SCALE: N.T.S.	FILE NAME: 40152046

JOB NO.: 6647300900 PLOT SCALE: 1=1

STARTED ON: 11/15/96 REVISED: 4/23/97

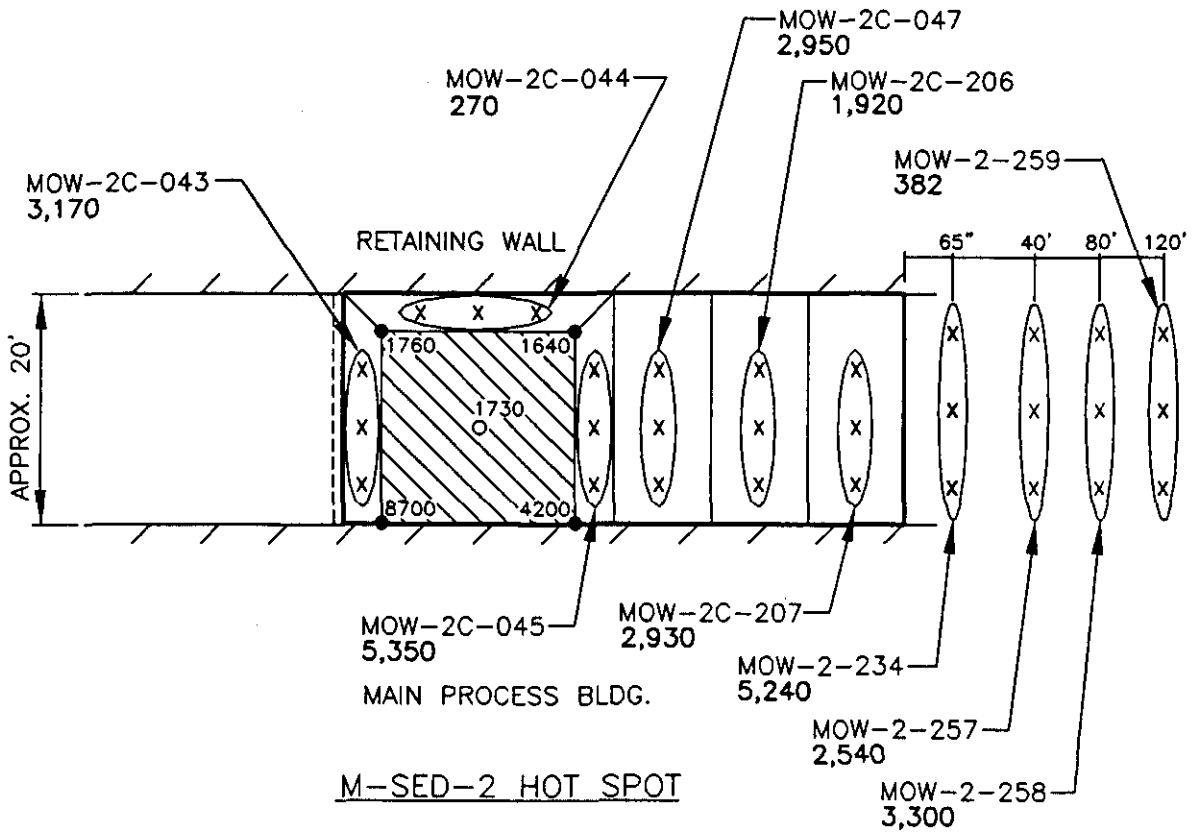

M-SED-2 HOT SPOT

LEGEND:

o RI SAMPLE LOCATION

● PRE-REMOVAL SAMPLE LOCATION

x PROPOSED CONFIRMATORY COMPOSITE LOCATION

▨ ORIGINAL 10' x 10' HOT SPOT

---- APPROXIMATE LOCATION OF CONCRETE WALL

MOW-2C-043 PHASE II COMPOSITE SAMPLE LOCATIONS
3,170 TOTAL LEAD DRY WEIGHT CONCENTRATION (mg/kg)

NO BASE SAMPLE - EXCAVATION UNDERLAIN BY CONCRETE PAD

FIGURE 3-5

MORGANTOWN TECHNICAL COMMITTEE MORGANTOWN, WEST VIRGINIA	PRE-EXCAVATION CONFIRMATORY SAMPLING MAIN PROCESS BUILDING AREA	
ICF KAISER ENGINEERS PITTSBURGH, PA	DATE: 11/15/96	DR.: B. SNYDER
	SCALE: N.T.S.	FILE NAME: 40152050

JOB NO.: 6647300900 PLOT SCALE: 1=1

STARTED ON: 11/15/96 REVISED: 4/23/97

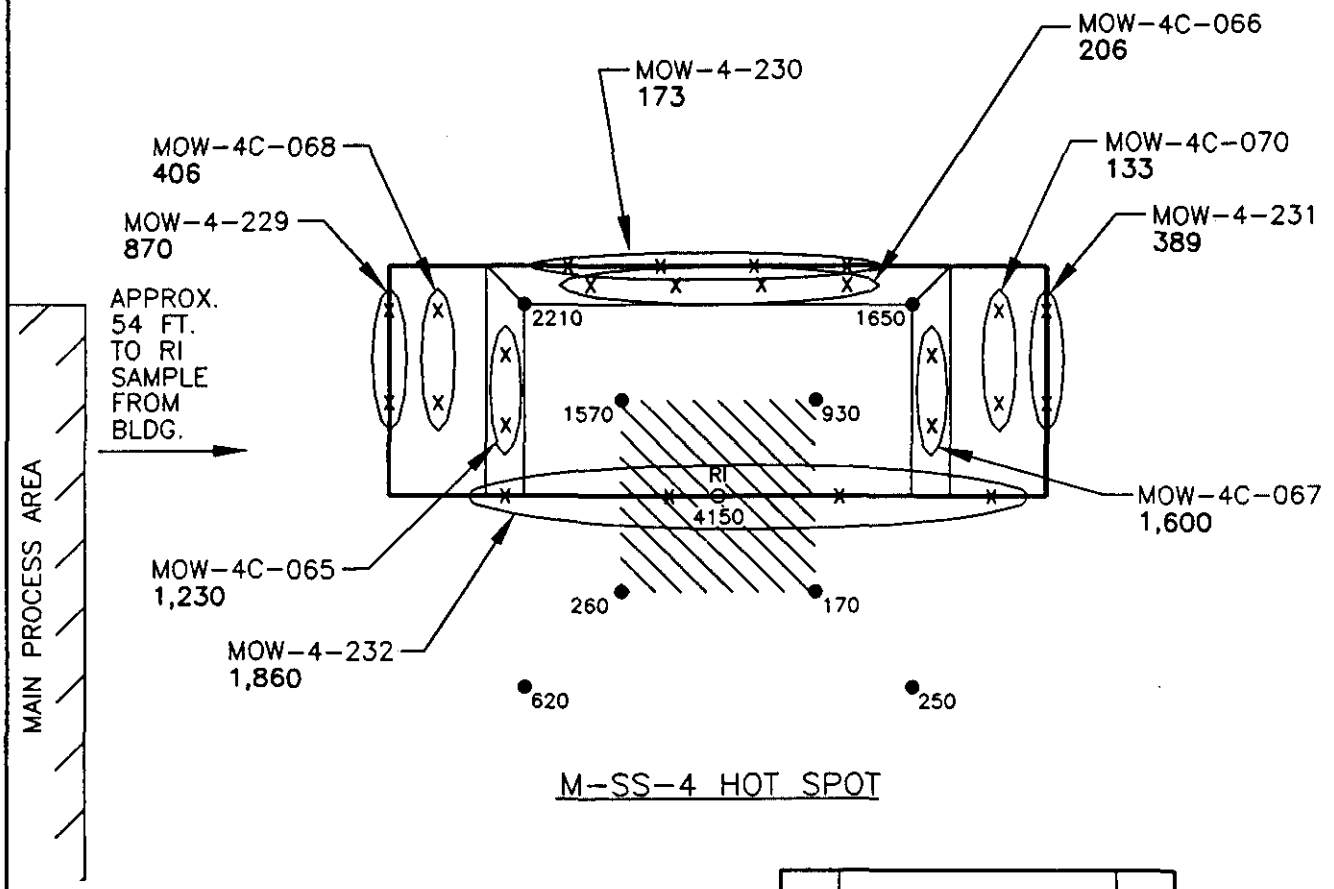

M-SS-4 HOT SPOT

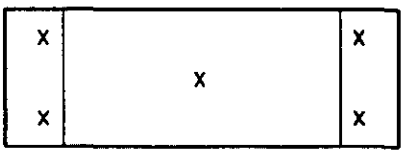

BASE:
MOW-4B-233
41

LEGEND:

- ○ RI SAMPLE LOCATION
- ● PRE-REMOVAL SAMPLE LOCATION
- x PROPOSED CONFIRMATORY COMPOSITE LOCATION
- ▨ ORIGINAL 10' x 10' HOT SPOT
- MOW-4C-065 / 1,230 — PHASE II COMPOSITE SAMPLE LOCATIONS TOTAL LEAD DRY WEIGHT CONCENTRATION (mg/kg)

FIGURE 3-6

MORGANTOWN TECHNICAL COMMITTEE MORGANTOWN, WEST VIRGINIA	PRE-EXCAVATION CONFIRMATORY SAMPLING MAIN PROCESS BUILDING AREA	
ICF KAISER ENGINEERS PITTSBURGH, PA	DATE: 11/15/96	DR.: B. SNYDER
	SCALE: N.T.S.	FILE NAME: 40152048

JOB NO.: 6647300900 PLOT SCALE: 1=1

STARTED ON: 11/15/96 REVISED: 4/23/97

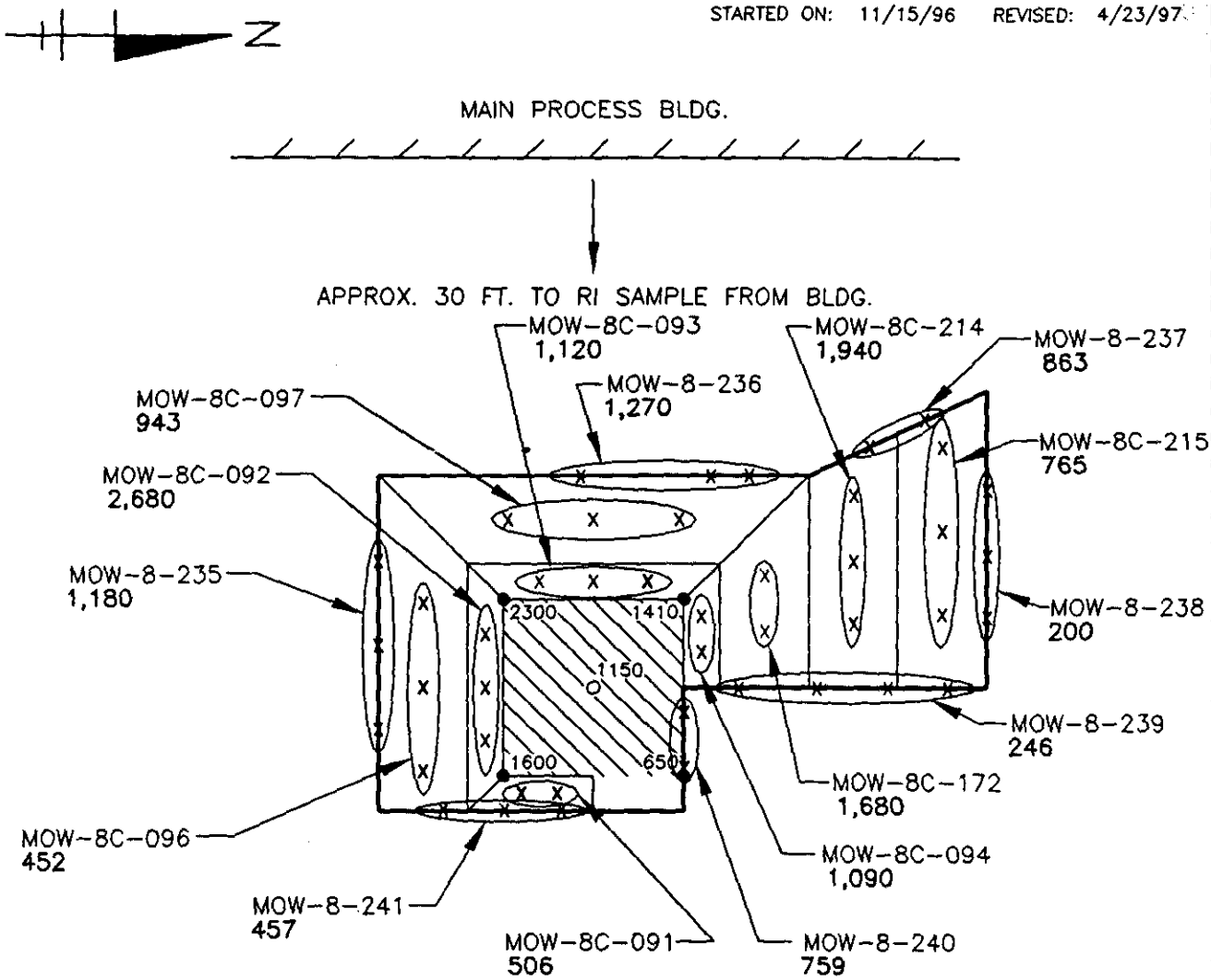

M-SS-8 HOT SPOT

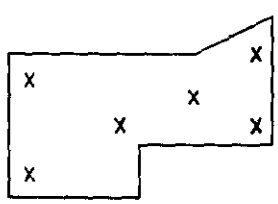

BASE:
MOW-8B-242
134

LEGEND:

- o RI SAMPLE LOCATION
- ● PRE-REMOVAL SAMPLE LOCATION
- x PROPOSED CONFIRMATORY COMPOSITE LOCATION
- ▨ ORIGINAL 10' x 10' HOT SPOTS
- MOW-8C-092 2,680 PHASE II COMPOSITE SAMPLE LOCATIONS TOTAL LEAD DRY WEIGHT CONCENTRATION (mg/kg)

FIGURE 3-7

MORGANTOWN TECHNICAL COMMITTEE MORGANTOWN, WEST VIRGINIA	PRE-EXCAVATION CONFIRMATORY SAMPLING MAIN PROCESS BUILDING AREA	
ICF KAISER ENGINEERS PITTSBURGH, PA	DATE: 11/15/96	DR.: B. SNYDER
	SCALE: N.T.S.	FILE NAME: 40152049

JOB NO.: 6647300900 PLOT SCALE: 1=1

STARTED ON: 11/15/96 REVISED: 4/23/97

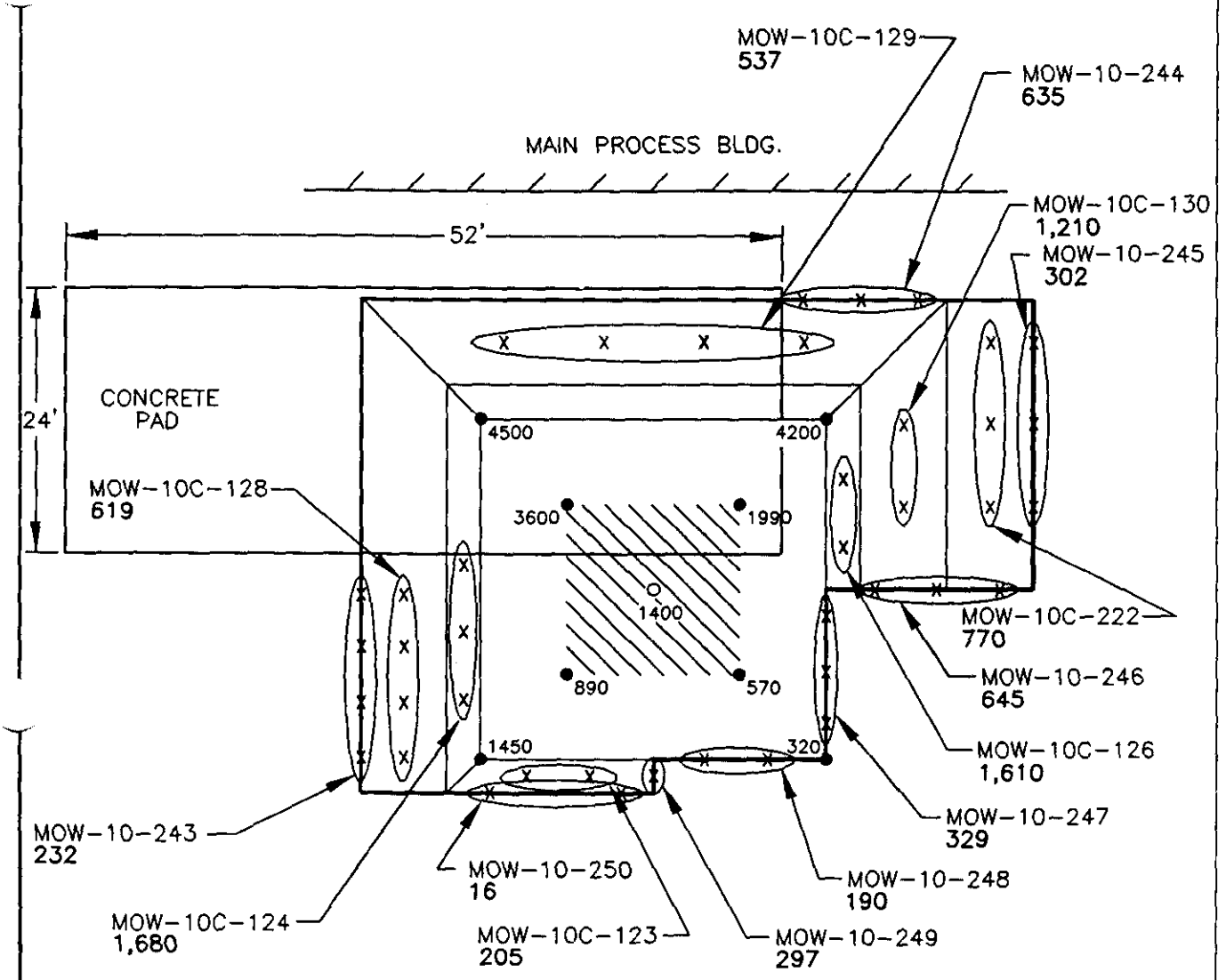

M-SS-10 HOT SPOT

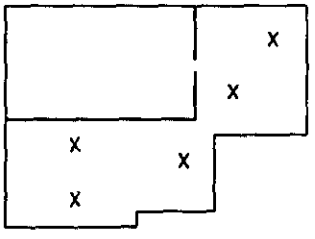

BASE:
MOW-10B-251
169

LEGEND:

o RI SAMPLE LOCATION

● PRE-REMOVAL SAMPLE LOCATION

x PROPOSED CONFIRMATORY COMPOSITE LOCATION

▨ ORIGINAL 10' x 10' HOT SPOT

MOW-10C-123 205 PHASE II COMPOSITE SAMPLE LOCATIONS TOTAL LEAD DRY WEIGHT CONCENTRATION (mg/kg)

FIGURE 3-8

MORGANTOWN TECHNICAL COMMITTEE MORGANTOWN, WEST VIRGINIA	PRE-EXCAVATION CONFIRMATORY SAMPLING MAIN PROCESS BUILDING AREA
ICF KAISER ENGINEERS PITTSBURGH, PA	DATE: 11/15/96 DR.: B. SNYDER SCALE: N.T.S. FILE NAME: 40152047

JOB NO.: 6647300900 PLOT SCALE: 1=1

STARTED ON: 4/23/97 REVISED: 0/00/00

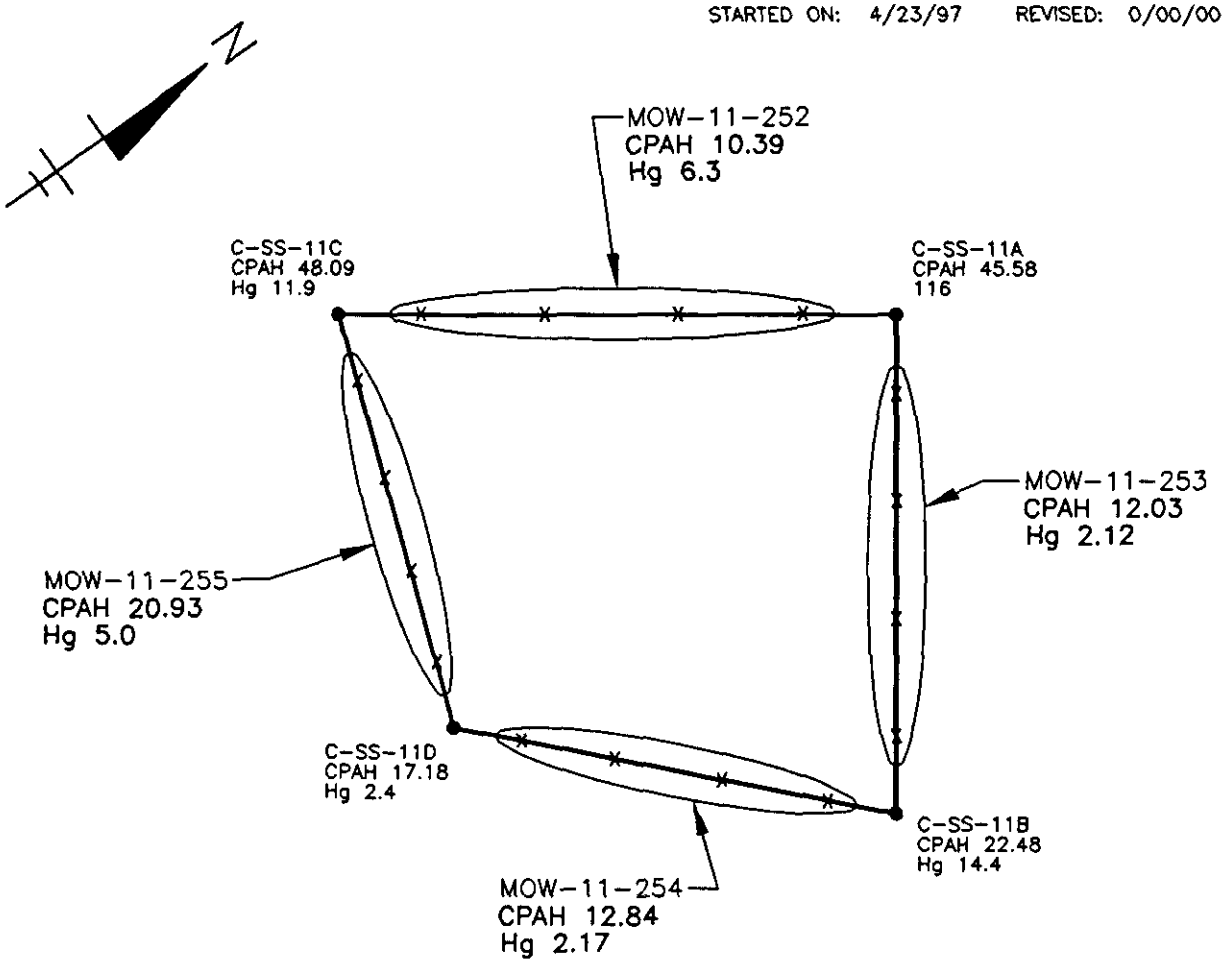

C-SS-11 BLUE MATERIAL AREA

BASE:

MOW-11B-256
CPAH 0.34
Hg 0.19

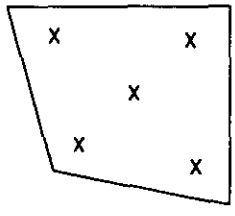

LEGEND:

● PRE-REMOVAL SAMPLE LOCATION

x GRAB SAMPLE LOCATION

MOW-1C-008 PHASE II COMPOSITE SAMPLE LOCATIONS
CPAH 0.34 ALL RESULTS IN mg/kg
Hg 0.12

FIGURE 3-9

MORGANTOWN TECHNICAL COMMITTEE MORGANTOWN, WEST VIRGINIA	PRE-EXCAVATION CONFIRMATORY SAMPLING BLUE MATERIAL AREA	
ICF KAISER ENGINEERS PITTSBURGH, PA	DATE: 4/23/97	DR.: BRENT
	SCALE: N.T.S.	FILE NAME: 40152051

ATTACHMENT B

Analysis Report

Lancaster Laboratories
A division of Thermo Analytical Inc.

LLI Sample No. SW 2682153
Collected: 3/20/97 at 13:30 by CLC

Submitted: 3/22/97 Reported: 4/ 2/97
Discard: 4/17/97

MOW-BA-1 Grab Soil Sample

Morgantown Ordnance - Project No. 66473
NVBA1 SOG#: MOW15-01

Account No: 07867
ICF Kaiser Engineers, Inc.
Gateway View Plaza
1600 W. Carson St.
Pittsburgh PA 15219

P.O. 66473
Rel.

CAT NO.	ANALYSIS NAME	AS RECEIVED RESULTS	LIMIT OF QUANTITATION	UNITS
4593	TCL Volatiles by 8240			See Page 2
1646	Barium	166.	9.9	mg/kg
1649	Cadmium	< 2.0	2.0	mg/kg
1651	Chromium	29.9	4.0	mg/kg
1655	Lead	27.5	9.9	mg/kg
1666	Silver	< 2.0	2.0	mg/kg
6935	Arsenic TR	17.6	1.0	mg/kg
6936	Selenium TR	< 0.50	0.50	mg/kg
0159	Mercury	< 0.10	0.10	mg/kg
4688	TCL SW846 Semivolatiles Soil			See Page 3
4689	TCL SW846 Semivolatiles/Soil			See Page 4
0111	Moisture	16.9	0.50	% by wt.

"Moisture" represents the loss in weight of the sample after oven drying at 103 - 105 degrees Celsius.

ATTACHMENT B

Analysis Reports

(Missing MOW 041697-M1 RB-11

1 COPY TO ICF Kaiser Engineers, Inc. ATTN: Mr. Doug Taylor
1 COPY TO Data Package Group

Questions? Contact your Client Services Representative
De Brooks at (717) 656-2300
05:14:36 D 0002 4 129101 557989
890 160.00 00163150 ASR000

Respectfully Submitted
Ramona V. Layman
Manager, Metals/Leachates

Analysis Report

Lancaster Laboratories
A division of Thermo Analytical Inc.

LLI Sample No. SW 2682153
Collected: 3/20/97 at 13:30 by CLC

Submitted: 3/22/97 Reported: 4/ 2/97
Discard: 4/17/97

MOW-BA-1 Grab Soil Sample

Morgantown Ordnance - Project No. 66473
NVBA1 SDG#: MOW15-01

Account No: 07867
ICF Kaiser Engineers, Inc.
Gateway View Plaza
1600 W. Carson St.
Pittsburgh PA 15219

P.O. 66473
Rel.

CAT NO.	ANALYSIS NAME	AS RECEIVED RESULTS	LIMIT OF QUANTITATION	UNITS
TCL Volatiles by 8240				
3434	Chloromethane	< 5.	5.	ug/kg
3435	Bromomethane	< 5.	5.	ug/kg
3436	Vinyl Chloride	< 5.	5.	ug/kg
3437	Chloroethane	< 5.	5.	ug/kg
3440	Methylene Chloride	< 5.	5.	ug/kg
4074	Acetone	< 20.	20.	ug/kg
4076	Carbon Disulfide	< 5.	5.	ug/kg
1180	1,1-Dichloroethene	< 5.	5.	ug/kg
3442	1,1-Dichloroethane	< 5.	5.	ug/kg
3444	Chloroform	< 5.	5.	ug/kg
3445	1,2-Dichloroethane	< 5.	5.	ug/kg
4085	2-Butanone	< 10.	10.	ug/kg
3446	1,1,1-Trichloroethane	< 5.	5.	ug/kg
3447	Carbon Tetrachloride	< 5.	5.	ug/kg
4091	Vinyl Acetate	< 10.	10.	ug/kg
3448	Bromodichloromethane	< 5.	5.	ug/kg
3450	1,2-Dichloropropane	< 5.	5.	ug/kg
3454	cis-1,3-Dichloropropene	< 5.	5.	ug/kg
1181	Trichloroethene	< 5.	5.	ug/kg
3452	Dibromochloromethane	< 5.	5.	ug/kg
3453	1,1,2-Trichloroethane	< 5.	5.	ug/kg
1182	Benzene	< 5.	5.	ug/kg
3451	trans-1,3-Dichloropropene	< 5.	5.	ug/kg
3456	Bromoform	< 5.	5.	ug/kg
4108	4-Methyl-2-pentanone	< 10.	10.	ug/kg
4107	2-Hexanone	< 10.	10.	ug/kg
3457	Tetrachloroethene	< 5.	5.	ug/kg
3449	1,1,2,2-Tetrachloroethane	< 5.	5.	ug/kg
1183	Toluene	< 5.	5.	ug/kg
1184	Chlorobenzene	< 5.	5.	ug/kg
3458	Ethylbenzene	< 5.	5.	ug/kg
4117	Styrene	< 5.	5.	ug/kg
3355	Xylene (total)	< 5.	5.	ug/kg
6187	trans-1,2-Dichloroethene	< 5.	5.	ug/kg
6277	cis-1,2-Dichloroethene	< 5.	5.	ug/kg

Questions? Contact your Client Services Representative
De Brooks at (717) 656-2300

Respectfully Submitted
Duane A. Luckenbill, B.S.
Group Leader, GC/MS Volatiles

Lancaster Laboratories
2425 Newport Road
P.O. Box 12425
Lancaster PA 17605-2425
717-656-2300 Fax 717-656-2681

MEMBER ACIL

See reverse side for explanation of symbols and abbreviations

Analysis Report

Lancaster Laboratories
A division of Thermo Analytical Inc.

LLI Sample No. SW 2682153
Collected: 3/20/97 at 13:30 by CLC

Submitted: 3/22/97 Reported: 4/ 2/97
Discard: 4/17/97

MOW-BA-1 Grab Soil Sample

Morgantown Ordnance - Project No. 66473
NVBA1 SDG#: MOW15-01

Account No: 07867
ICF Kaiser Engineers, Inc.
Gateway View Plaza
1600 W. Carson St.
Pittsburgh PA 15219

P.O. 66473
Rel.

CAT NO.	ANALYSIS NAME	AS RECEIVED RESULTS	LIMIT OF QUANTITATION	UNITS
TCL SW846 Semivolatiles Soil				
1185	phenol	< 330.	330.	ug/kg
3753	bis (2-chloroethyl) ether	< 330.	330.	ug/kg
1186	2-chlorophenol	< 330.	330.	ug/kg
3754	1,3-dichlorobenzene	< 330.	330.	ug/kg
1187	1,4-dichlorobenzene	< 330.	330.	ug/kg
3755	1,2-dichlorobenzene	< 330.	330.	ug/kg
4690	2-methylphenol	< 330.	330.	ug/kg
4691	2,2'-oxybis (1-chloropropane)	< 330.	330.	ug/kg
4692	4-methylphenol	< 330.	330.	ug/kg
1188	N-nitrosodi-n-propylamine	< 330.	330.	ug/kg
3757	hexachloroethane	< 330.	330.	ug/kg
3758	nitrobenzene	< 330.	330.	ug/kg
3759	isophorone	< 330.	330.	ug/kg
3746	2-nitrophenol	< 330.	330.	ug/kg
3747	2,4-dimethylphenol	< 330.	330.	ug/kg
3760	bis (2-chloroethoxy) methane	< 330.	330.	ug/kg
3748	2,4-dichlorophenol	< 330.	330.	ug/kg
1189	1,2,4-trichlorobenzene	< 330.	330.	ug/kg
3761	naphthalene	< 330.	330.	ug/kg
4693	4-chloroaniline	< 330.	330.	ug/kg
3762	hexachlorobutadiene	< 330.	330.	ug/kg
1190	4-chloro-3-methylphenol	< 330.	330.	ug/kg
4694	2-methylnaphthalene	< 330.	330.	ug/kg
3763	hexachlorocyclopentadiene	< 330.	330.	ug/kg
3749	2,4,6-trichlorophenol	< 330.	330.	ug/kg
4695	2,4,5-trichlorophenol	< 330.	330.	ug/kg
3764	2-chloronaphthalene	< 330.	330.	ug/kg
4696	2-nitroaniline	< 330.	330.	ug/kg
3766	dimethyl phthalate	< 330.	330.	ug/kg
3765	acenaphthylene	< 330.	330.	ug/kg

Questions? Contact your Client Services Representative
De Brooks at (717) 656-2300

Respectfully Submitted
Christine M. Ratcliff, B.S.
Senior Chemist, GC/MS

Lancaster Laboratories
2425 New Holland Pike
PO Box 12425
Lancaster, PA 17605-2425
717-656-2300 Fax 717-656-2681

MEMBER ACIL

See reverse side for explanation of symbols and abbreviations

Lancaster Laboratories
A division of Thermo Analytical Inc.

LLI Sample No. SW 2682153
Collected: 3/20/97 at 13:30 by CLC

Submitted: 3/22/97 Reported: 4/ 2/97
Discard: 4/17/97

MOW-BA-1 Grab Soil Sample

Morgantown Ordnance - Project No. 66473
NVBA1 SDG#: MOW15-01

Account No: 07867
ICF Kaiser Engineers, Inc.
Gateway View Plaza
1600 W. Carson St.
Pittsburgh PA 15219

P.O. 66473
Rel.

CAT NO.	ANALYSIS NAME	AS RECEIVED RESULTS	LIMIT OF QUANTITATION	UNITS
TCL SW846 Semivolatiles/Soil				
4697	3-nitroaniline	< 330.	330.	ug/kg
1191	acenaphthene	< 330.	330.	ug/kg
3750	2,4-dinitrophenol	< 830.	830.	ug/kg
1192	4-nitrophenol	< 830.	830.	ug/kg
4698	dibenzofuran	< 330.	330.	ug/kg
1193	2,4-dinitrotoluene	< 330.	330.	ug/kg
4699	2,6-dinitrotoluene	< 330.	330.	ug/kg
3770	diethyl phthalate	< 330.	330.	ug/kg
3769	4-chlorophenyl phenyl ether	< 330.	330.	ug/kg
3768	fluorene	< 330.	330.	ug/kg
4700	4-nitroaniline	< 330.	330.	ug/kg
4701	4,6-dinitro-2-methylphenol	< 830.	830.	ug/kg
3772	N-nitrosodiphenylamine	< 330.	330.	ug/kg
3773	4-bromophenyl phenyl ether	< 330.	330.	ug/kg
3774	hexachlorobenzene	< 330.	330.	ug/kg
1194	pentachlorophenol	< 830.	830.	ug/kg
3775	phenanthrene	< 330.	330.	ug/kg
3776	anthracene	< 330.	330.	ug/kg
4702	carbazole	< 330.	330.	ug/kg
3777	di-n-butyl phthalate	< 330.	330.	ug/kg
3778	fluoranthene	< 330.	330.	ug/kg
1195	pyrene	< 330.	330.	ug/kg
3780	butyl benzyl phthalate	< 330.	330.	ug/kg
3783	3,3'-dichlorobenzidine	< 670.	670.	ug/kg
3781	benzo (a) anthracene	< 330.	330.	ug/kg
3784	bis (2-ethylhexyl) phthalate	< 330.	330.	ug/kg
3782	chrysene	< 330.	330.	ug/kg
3785	di-n-octyl phthalate	< 330.	330.	ug/kg
3786	benzo (b) fluoranthene	< 330.	330.	ug/kg
3787	benzo (k) fluoranthene	< 330.	330.	ug/kg
3788	benzo (a) pyrene	< 330.	330.	ug/kg
3789	indeno (1,2,3-cd) pyrene	< 330.	330.	ug/kg
3790	dibenz (a,h) anthracene	< 330.	330.	ug/kg
3791	benzo (ghi) perylene	< 330.	330.	ug/kg

Questions? Contact your Client Services Representative
De Brooks at (717) 656-2300

Respectfully Submitted
Christine M. Ratcliff, B.S.
Senior Chemist, GC/MS

MEMBER ACIL
Lancaster Laboratories
2425 New Holland Pike
PO Box 12425
Lancaster, PA 17605-2425
717-656-2300 Fax 717-656-2681

Analysis Report

Lancaster Laboratories
A division of Thermo Analytical Inc.

LLI Sample No. SW 2682153
Collected: 3/20/97 at 13:30 by CLC

Submitted: 3/22/97 Reported: 4/ 2/97
Discard: 4/17/97

MOW-BA-1 Grab Soil Sample

Morgantown Ordnance - Project No. 66473
NVBA1 SDG#: MOW15-01

Account No: 07867
ICF Kaiser Engineers, Inc.
Gateway View Plaza
1600 W. Carson St.
Pittsburgh PA 15219

P.O. 66473
Rel.

CAT NO.	ANALYSIS NAME	AS RECEIVED RESULTS	LIMIT OF QUANTITATION	UNITS
TCL SW846	Semivolatiles/Soil			

N-nitrosodiphenylamine decomposes in the GC inlet forming diphenylamine. The result reported for N-nitrosodiphenylamine represents the combined total of both compounds.

Questions? Contact your Client Services Representative
De Brooks at (717) 656-2300

Respectfully Submitted
Christine M. Ratcliff, B.S.
Senior Chemist, GC/MS

MEMBER ACIL
Lancaster Laboratories
2425 New Holland Pike
PO Box 12425
Lancaster, PA 17605-2425
717-656-2300 Fax 717-656-2681

Analysis Report

Lancaster Laboratories
A division of Thermo Analytical Inc.

LLI Sample No. SW 2682155
Collected: 3/20/97 at 13:00 by CLC

Submitted: 3/22/97 Reported: 4/ 2/97
Discard: 4/17/97

MOW-BA-2 Grab Soil Sample

Morgantown Ordnance - Project No. 66473
NVBA2 SDG#: MOW15-03*

Account No: 07867
ICF Kaiser Engineers, Inc.
Gateway View Plaza
1600 W. Carson St.
Pittsburgh PA 15219

P.O. 66473
Rel.

CAT NO.	ANALYSIS NAME	AS RECEIVED RESULTS	LIMIT OF QUANTITATION	UNITS
4593	TCL Volatiles by 8240			See Page 2
1646	Barium	178.	9.9	mg/kg
1649	Cadmium	< 2.0	2.0	mg/kg
1651	Chromium	21.7	4.0	mg/kg
1655	Lead	23.3	9.9	mg/kg
1666	Silver	< 2.0	2.0	mg/kg
6935	Arsenic TR	9.1	1.0	mg/kg
6936	Selenium TR	< 0.50	0.50	mg/kg
0159	Mercury	< 0.097	0.097	mg/kg
4688	TCL SW846 Semivolatiles Soil			See Page 3
4689	TCL SW846 Semivolatiles/Soil			See Page 4
0111	Moisture	14.9	0.50	% by wt.

"Moisture" represents the loss in weight of the sample after oven drying at 103 - 105 degrees Celsius.

1 COPY TO ICF Kaiser Engineers, Inc. ATTN: Mr. Doug Taylor
1 COPY TO Data Package Group

Questions? Contact your Client Services Representative
De Brooks at (717) 656-2300
05:15:37 D 0002 4 129101 557989
890 120.00 00159150 ASR000

Respectfully Submitted
Ramona V. Layman
Manager, Metals/Leachates

MEMBER ACIL
Lancaster Laboratories
2425 New Holland Pike
P.O. Box 12425
Lancaster PA 17605-2425
717-656-2300 Fax 717-656-2681

See reverse side for explanation of symbols and abbreviations

Analysis Report

Lancaster Laboratories
A division of Thermo Analytical Inc.

LLI Sample No. SW 2682155
Collected: 3/20/97 at 13:00 by CLC

Submitted: 3/22/97 Reported: 4/ 2/97
Discard: 4/17/97

MOW-BA-2 Grab Soil Sample

Morgantown Ordnance - Project No. 66473
NVBA2 SDG#: MOW15-03*

Account No: 07867
ICF Kaiser Engineers, Inc.
Gateway View Plaza
1600 W. Carson St.
Pittsburgh PA 15219

P.O. 66473
Rel.

CAT NO.	ANALYSIS NAME	AS RECEIVED RESULTS	LIMIT OF QUANTITATION	UNITS
TCL Volatiles by 8240				
3434	Chloromethane	< 5.	5.	ug/kg
3435	Bromomethane	< 5.	5.	ug/kg
3436	Vinyl Chloride	< 5.	5.	ug/kg
3437	Chloroethane	< 5.	5.	ug/kg
3440	Methylene Chloride	< 5.	5.	ug/kg
4074	Acetone	< 20.	20.	ug/kg
4076	Carbon Disulfide	< 5.	5.	ug/kg
1180	1,1-Dichloroethene	< 5.	5.	ug/kg
3442	1,1-Dichloroethane	< 5.	5.	ug/kg
3444	Chloroform	< 5.	5.	ug/kg
3445	1,2-Dichloroethane	< 5.	5.	ug/kg
4085	2-Butanone	< 10.	10.	ug/kg
3446	1,1,1-Trichloroethane	< 5.	5.	ug/kg
3447	Carbon Tetrachloride	< 5.	5.	ug/kg
4091	Vinyl Acetate	< 10.	10.	ug/kg
3448	Bromodichloromethane	< 5.	5.	ug/kg
3450	1,2-Dichloropropane	< 5.	5.	ug/kg
3454	cis-1,3-Dichloropropene	< 5.	5.	ug/kg
1181	Trichloroethene	< 5.	5.	ug/kg
3452	Dibromochloromethane	< 5.	5.	ug/kg
3453	1,1,2-Trichloroethane	< 5.	5.	ug/kg
1182	Benzene	< 5.	5.	ug/kg
3451	trans-1,3-Dichloropropene	< 5.	5.	ug/kg
3456	Bromoform	< 5.	5.	ug/kg
4108	4-Methyl-2-pentanone	< 10.	10.	ug/kg
4107	2-Hexanone	< 10.	10.	ug/kg
3457	Tetrachloroethene	< 5.	5.	ug/kg
3449	1,1,2,2-Tetrachloroethane	< 5.	5.	ug/kg
1183	Toluene	< 5.	5.	ug/kg
1184	Chlorobenzene	< 5.	5.	ug/kg
3458	Ethylbenzene	< 5.	5.	ug/kg
4117	Styrene	< 5.	5.	ug/kg
3355	Xylene (total)	< 5.	5.	ug/kg
6187	trans-1,2-Dichloroethene	< 5.	5.	ug/kg
6277	cis-1,2-Dichloroethene	< 5.	5.	ug/kg

Questions? Contact your Client Services Representative
De Brooks at (717) 656-2300

Respectfully Submitted
Duane A. Luckenbill, B.S.
Group Leader, GC/MS Volatiles

MEMBER ACIL
Lancaster Laboratories
2425 New Holland Pike
P.O. Box 12425
Lancaster, PA 17605-2425
717-656-2300 Fax 717-656-2681

See reverse side for explanation of symbols and abbreviations

Lancaster Laboratories
A division of Thermo Analytical Inc.

LLI Sample No. SW 2682155
Collected: 3/20/97 at 13:00 by CLC

Submitted: 3/22/97 Reported: 4/ 2/97
Discard: 4/17/97

MOW-BA-2 Grab Soil Sample

Morgantown Ordnance - Project No. 66473
NVBA2 SDG#: MOW15-03*

Account No: 07867
ICF Kaiser Engineers, Inc.
Gateway View Plaza
1600 W. Carson St.
Pittsburgh PA 15219

P.O. 66473
Rel.

CAT NO.	ANALYSIS NAME	AS RECEIVED RESULTS	LIMIT OF QUANTITATION	UNITS
TCL SW846 Semivolatiles Soil				
1185	phenol	< 330.	330.	ug/kg
3753	bis (2-chloroethyl) ether	< 330.	330.	ug/kg
1186	2-chlorophenol	< 330.	330.	ug/kg
3754	1,3-dichlorobenzene	< 330.	330.	ug/kg
1187	1,4-dichlorobenzene	< 330.	330.	ug/kg
3755	1,2-dichlorobenzene	< 330.	330.	ug/kg
4690	2-methylphenol	< 330.	330.	ug/kg
4691	2,2'-oxybis (1-chloropropane)	< 330.	330.	ug/kg
4692	4-methylphenol	< 330.	330.	ug/kg
1188	N-nitrosodi-n-propylamine	< 330.	330.	ug/kg
3757	hexachloroethane	< 330.	330.	ug/kg
3758	nitrobenzene	< 330.	330.	ug/kg
3759	isophorone	< 330.	330.	ug/kg
3746	2-nitrophenol	< 330.	330.	ug/kg
3747	2,4-dimethylphenol	< 330.	330.	ug/kg
3760	bis (2-chloroethoxy) methane	< 330.	330.	ug/kg
3748	2,4-dichlorophenol	< 330.	330.	ug/kg
1189	1,2,4-trichlorobenzene	< 330.	330.	ug/kg
3761	naphthalene	< 330.	330.	ug/kg
4693	4-chloroaniline	< 330.	330.	ug/kg
3762	hexachlorobutadiene	< 330.	330.	ug/kg
1190	4-chloro-3-methylphenol	< 330.	330.	ug/kg
4694	2-methylnaphthalene	< 330.	330.	ug/kg
3763	hexachlorocyclopentadiene	< 330.	330.	ug/kg
3749	2,4,6-trichlorophenol	< 330.	330.	ug/kg
4695	2,4,5-trichlorophenol	< 330.	330.	ug/kg
3764	2-chloronaphthalene	< 330.	330.	ug/kg
4696	2-nitroaniline	< 330.	330.	ug/kg
3766	dimethyl phthalate	< 330.	330.	ug/kg
3765	acenaphthylene	< 330.	330.	ug/kg

Questions? Contact your Client Services Representative
De Brooks at (717) 656-2300

Respectfully Submitted
Christine M. Ratcliff, B.S.
Senior Chemist, GC/MS

MEMBER ACIL
Lancaster Laboratories
2425 New Holland Pike
PO Box 12425
Lancaster, PA 17605-2425
717-656-2300 Fax 717-656-2681

Analysis Report

Lancaster Laboratories
A division of Thermo Analytical Inc.

LLI Sample No. SW 2682155
Collected: 3/20/97 at 13:00 by CLC

Submitted: 3/22/97 Reported: 4/ 2/97
Discard: 4/17/97

MOW-BA-2 Grab Soil Sample

Morgantown Ordnance - Project No. 66473
NVBA2 SDG#: MOW15-03*

Account No: 07867
ICF Kaiser Engineers, Inc.
Gateway View Plaza
1600 W. Carson St.
Pittsburgh PA 15219

P.O. 66473
Rel.

CAT NO.	ANALYSIS NAME	AS RECEIVED RESULTS	LIMIT OF QUANTITATION	UNITS
TCL SW846 Semivolatiles/Soil				
4697	3-nitroaniline	< 330.	330.	ug/kg
1191	acenaphthene	< 330.	330.	ug/kg
3750	2,4-dinitrophenol	< 830.	830.	ug/kg
1192	4-nitrophenol	< 830.	830.	ug/kg
4698	dibenzofuran	< 330.	330.	ug/kg
1193	2,4-dinitrotoluene	< 330.	330.	ug/kg
4699	2,6-dinitrotoluene	< 330.	330.	ug/kg
3770	diethyl phthalate	< 330.	330.	ug/kg
3769	4-chlorophenyl phenyl ether	< 330.	330.	ug/kg
3768	fluorene	< 330.	330.	ug/kg
4700	4-nitroaniline	< 330.	330.	ug/kg
4701	4,6-dinitro-2-methylphenol	< 830.	830.	ug/kg
3772	N-nitrosodiphenylamine	< 330.	330.	ug/kg
3773	4-bromophenyl phenyl ether	< 330.	330.	ug/kg
3774	hexachlorobenzene	< 330.	330.	ug/kg
1194	pentachlorophenol	< 830.	830.	ug/kg
3775	phenanthrene	< 330.	330.	ug/kg
3776	anthracene	< 330.	330.	ug/kg
4702	carbazole	< 330.	330.	ug/kg
3777	di-n-butyl phthalate	< 330.	330.	ug/kg
3778	fluoranthene	< 330.	330.	ug/kg
1195	pyrene	< 330.	330.	ug/kg
3780	butyl benzyl phthalate	< 330.	330.	ug/kg
3783	3,3'-dichlorobenzidine	< 670.	670.	ug/kg
3781	benzo (a) anthracene	< 330.	330.	ug/kg
3784	bis (2-ethylhexyl) phthalate	< 330.	330.	ug/kg
3782	chrysene	< 330.	330.	ug/kg
3785	di-n-octyl phthalate	< 330.	330.	ug/kg
3786	benzo (b) fluoranthene	< 330.	330.	ug/kg
3787	benzo (k) fluoranthene	< 330.	330.	ug/kg
3788	benzo (a) pyrene	< 330.	330.	ug/kg
3789	indeno (1,2,3-cd) pyrene	< 330.	330.	ug/kg
3790	dibenz (a,h) anthracene	< 330.	330.	ug/kg
3791	benzo (ghi) perylene	< 330.	330.	ug/kg

Questions? Contact your Client Services Representative
De Brooks at (717) 656-2300

Respectfully Submitted
Christine M. Ratcliff, B.S.
Senior Chemist, GC/MS

Analysis Report

Lancaster Laboratories
A division of Thermo Analytical Inc.

LLI Sample No. SW 2682155
Collected: 3/20/97 at 13:00 by CLC

Submitted: 3/22/97 Reported: 4/ 2/97
Discard: 4/17/97

MOW-BA-2 Grab Soil Sample

Morgantown Ordnance - Project No. 66473
NVBA2 SDG#: MOW15-03*

Account No: 07867
ICF Kaiser Engineers, Inc.
Gateway View Plaza
1600 W. Carson St.
Pittsburgh PA 15219

P.O. 66473
Rel.

CAT NO.	ANALYSIS NAME	AS RECEIVED RESULTS	LIMIT OF QUANTITATION	UNITS
TCL SW846	Semivolatiles/Soil			

N-nitrosodiphenylamine decomposes in the GC inlet forming diphenylamine. The result reported for N-nitrosodiphenylamine represents the combined total of both compounds.

Questions? Contact your Client Services Representative
De Brooks at (717) 656-2300

Respectfully Submitted
Christine M. Ratcliff, B.S.
Senior Chemist, GC/MS

Analysis Report

Lancaster Laboratories
A division of Thermo Analytical Inc.

LLI Sample No. WW 2682147
Collected: 3/20/97 at 15:00 by CLC

Submitted: 3/22/97 Reported: 4/ 3/97
Discard: 4/11/97

M-SW-456A-2 Grab Water Sample

Morgantown Ordnance - Project No. 66473
M456A SDG#: MOW14-05

Account No: 07867
ICF Kaiser Engineers, Inc.
Gateway View Plaza
1600 W. Carson St.
Pittsburgh PA 15219

P.O. 66473
Rel.

CAT NO.	ANALYSIS NAME	AS RECEIVED RESULTS	LIMIT OF QUANTITATION	UNITS
7043	Aluminum TR	< 0.20	0.20	mg/l
7053	Copper TR	0.0111	0.0040	mg/l
7054	Iron TR	0.12	0.10	mg/l
7055	Lead TR	< 0.0050	0.0050	mg/l
7058	Manganese TR	0.0195	0.0020	mg/l
7072	Zinc TR	0.173	0.020	mg/l
0259	Mercury	< 0.00020	0.00020	mg/l
1861	PAH's in Water			See Page 2
6030	PCBs in Water		1.	See Page 3
0539	Benzene	< 1.	1.	ug/l
0553	Base Neutrals			See Page 4
0554	Base Neutrals (cont)			See Page 5
0224	Chloride	2.6	1.0	mg/l
0237	Total Cyanide (water)	0.0103	0.0050	mg/l
0273	Total Organic Carbon	1.9	1.0	mg/l
	The Total Organic Carbon (TOC) result reported above was determined by measuring total carbon by a persulfate digestion/infrared detection method on an acidified sample which has been purged of inorganic carbon using nitrogen. It represents "non-purgeable TOC".			
0434	Phenols (water)	< 0.0050	0.0050	mg/l
1504	Fluoride	< 0.50	0.50	mg/l
0200	pH	7.10	0.010	
0206	Total Suspended Solids	< 9.0	9.0	mg/l
0231	Oil & Grease	< 6.0	6.0	mg/l
	The blank analyzed with this sample contained 2.1 mg/l of oil and grease. As directed in EPA method 413.1, the data reported above was corrected for the blank value.			
1553	Chemical Oxygen Demand	< 8.0	8.0	mg/l
6914	Ammonia-Nitrogen	< 0.20	0.20	mg/l

1 COPY TO ICF Kaiser Engineers, Inc. ATTN: Mr. Doug Taylor
1 COPY TO Data Package Group

Questions? Contact your Client Services Representative
De Brooks at (717) 656-2300
03:39:29 D 0002 13 129101 557988
320 120.00 00181050 ASR000

Respectfully Submitted
Ramona V. Layman
Manager, Metals/Leachates

MEMBER ACIL
Lancaster Laboratories
2425 New Holland Pike
P.O. Box 12425
Lancaster, PA 17605-2425
717-656-2300 Fax 717-656-2681

Analysis Report

Lancaster Laboratories
A division of Thermo Analytical Inc.

ORIGINAL
(Red)

LLI Sample No. WW 2682147
Collected: 3/20/97 at 15:00 by CLC

Submitted: 3/22/97 Reported: 4/ 3/97
Discard: 4/11/97

M-SW-456A-2 Grab Water Sample

Morgantown Ordnance - Project No. 66473
M456A SDG#: MOW14-05

Account No: 07867
ICF Kaiser Engineers, Inc.
Gateway View Plaza
1600 W. Carson St.
Pittsburgh PA 15219

P.O. 66473
Rel.

CAT NO.	ANALYSIS NAME	AS RECEIVED RESULTS	LIMIT OF QUANTITATION	UNITS
PAH's in Water				
3280	Naphthalene	< 10.	10.	ug/l
3281	Acenaphthylene	< 20.	20.	ug/l
3282	Acenaphthene	< 20.	20.	ug/l
3283	Fluorene	< 2.	2.	ug/l
3284	Phenanthrene	< 2.	2.	ug/l
3285	Anthracene	< 1.	1.	ug/l
3286	Fluoranthene	< 0.5	0.5	ug/l
3287	Pyrene	< 2.	2.	ug/l
3288	Benzo(a)anthracene	< 0.1	0.1	ug/l
3289	Chrysene	< 1.	1.	ug/l
3290	Benzo(b)fluoranthene	< 0.2	0.2	ug/l
3291	Benzo(k)fluoranthene	< 0.1	0.1	ug/l
3292	Benzo(a)pyrene	< 0.2	0.2	ug/l
3293	Dibenzo(a,h)anthracene	< 0.2	0.2	ug/l
3294	Benzo(g,h,i)perylene	< 0.5	0.5	ug/l
3295	Indeno(1,2,3-cd)pyrene	< 0.5	0.5	ug/l

Questions? Contact your Client Services Representative
De Brooks at (717) 656-2300

Respectfully Submitted
Jenifer E. Hess, B.S.
Group Leader Pesticides/PCBs

MEMBER ACIL
Lancaster Laboratories
2425 New Holland Pike
PO Box 12425
Lancaster PA 17605-2425
717-656-2300 Fax 717-656-2681

See reverse side for explanation of symbols and abbreviations

Analysis Report

Lancaster Laboratories
A division of Thermo Analytical Inc.

LLI Sample No. WW 2682147
Collected: 3/20/97 at 15:00 by CLC

Submitted: 3/22/97 Reported: 4/ 3/97
Discard: 4/11/97

M-SW-456A-2 Grab Water Sample

Morgantown Ordnance - Project No. 66473
M456A SDG#: MOW14-05

Account No: 07867
ICF Kaiser Engineers, Inc.
Gateway View Plaza
1600 W. Carson St.
Pittsburgh PA 15219

P.O. 66473
Rel.

CAT NO.	ANALYSIS NAME	AS RECEIVED RESULTS	LIMIT OF QUANTITATION	UNITS
PCBs in Water				
0639	PCB-1016	< 1.0	1.0	ug/l
0640	PCB-1221	< 1.0	1.0	ug/l
0641	PCB-1232	< 1.0	1.0	ug/l
0642	PCB-1242	< 1.0	1.0	ug/l
0643	PCB-1248	< 1.0	1.0	ug/l
0644	PCB-1254	< 1.0	1.0	ug/l
0645	PCB-1260	< 1.0	1.0	ug/l

Questions? Contact your Client Services Representative
De Brooks at (717) 656-2300

Respectfully Submitted
Jenifer E. Hess, B.S.
Group Leader Pesticides/PCBs

MEMBER ACIL
Lancaster Laboratories
2425 New Holland Pike
PO Box 12425
Lancaster PA 17605-2425
717-656-2300 Fax 717-656-2681

See reverse side for explanation of symbols and abbreviations

Analysis Report

Lancaster Laboratories
A division of Thermo Analytical Inc.

LLI Sample No. WW 2682147
Collected: 3/20/97 at 15:00 by CLC

Submitted: 3/22/97 Reported: 4/ 3/97
Discard: 4/11/97

M-SW-456A-2 Grab Water Sample

Morgantown Ordnance - Project No. 66473
M456A SDG#: MOW14-05

Account No: 07867
ICF Kaiser Engineers, Inc.
Gateway View Plaza
1600 W. Carson St.
Pittsburgh PA 15219

P.O. 66473
Rel.

CAT NO.	ANALYSIS NAME	AS RECEIVED RESULTS	LIMIT OF QUANTITATION	UNITS
Base Neutrals				
0689	hexachlorobenzene	< 9.	9.	ug/l

Questions? Contact your Client Services Representative
De Brooks at (717) 656-2300

Respectfully Submitted
Christine M. Ratcliff, B.S.
Senior Chemist, GC/MS

MEMBER ACIL
Lancaster Laboratories
2425 New Holland Pike
P.O. Box 12425
Lancaster, PA 17605-2425
717-656-2300 Fax 717-656-2681

See reverse side for explanation of symbols and abbreviations

Analysis Report

Lancaster Laboratories
A division of Thermo Analytical Inc.

LLI Sample No. WW 2682147
Collected: 3/20/97 at 15:00 by CLC

Submitted: 3/22/97 Reported: 4/ 3/97
Discard: 4/11/97

M-SW-456A-2 Grab Water Sample

Morgantown Ordnance - Project No. 66473
M456A SDG#: MOW14-05

Account No: 07867
ICF Kaiser Engineers, Inc.
Gateway View Plaza
1600 W. Carson St.
Pittsburgh PA 15219

P.O. 66473
Rel.

CAT NO.	ANALYSIS NAME	AS RECEIVED RESULTS	LIMIT OF QUANTITATION	UNITS
Base Neutrals (cont)				

Questions? Contact your Client Services Representative
De Brooks at (717) 656-2300

Respectfully Submitted
Christine M. Ratcliff, B.S.
Senior Chemist, GC/MS

Lancaster Laboratories
2425 New Holland Pike
P.O. Box 12425
Lancaster, PA 17605-2425
Phone 717-656-2300 Fax 717-656-2681

MEMBER ACIL

See reverse side for explanation of symbols and abbreviations

Analysis Report

Lancaster Laboratories
A division of Thermo Analytical Inc.

LLI Sample No. WW 2682146
Collected: 3/20/97 at 10:45 by CLC

Submitted: 3/22/97 Reported: 4/ 3/97
Discard: 4/11/97

MOW-PP-SW-2 Duplicate Grab Water Sample

Morgantown Ordnance - Project No. 66473
PPSW2 SDG#: MOW14-04DUP

Account No: 07867
ICF Kaiser Engineers, Inc.
Gateway View Plaza
1600 W. Carson St.
Pittsburgh PA 15219

P.O. 66473
Rel.

CAT NO.	ANALYSIS NAME	AS RECEIVED RESULTS	LIMIT OF QUANTITATION	UNITS
7043	Aluminum TR	< 0.20	0.20	mg/l
7053	Copper TR	0.0367	0.0040	mg/l
7054	Iron TR	1.51	0.10	mg/l
7055	Lead TR	0.0226	0.0050	mg/l
7058	Manganese TR	0.207	0.0020	mg/l
7072	Zinc TR	0.252	0.020	mg/l
0259	Mercury	0.00060	0.00020	mg/l
0200	pH	6.92	0.010	
0206	Total Suspended Solids	35.6	9.0	mg/l

1 COPY TO ICF Kaiser Engineers, Inc. ATTN: Mr. Doug Taylor
1 COPY TO Data Package Group

Questions? Contact your Client Services Representative
De Brooks at (717) 656-2300
03:39:15 D 0002 13 129101 557988
320 15.00 00025650 ASR000

Respectfully Submitted
Ramona V. Layman
Manager, Metals/Leachates

MEMBER ACIL
Lancaster Laboratories
2425 New Holland Pike
PO Box 12425
Lancaster, PA 17605-2425
717-656-2300 Fax: 717-656-2681

See reverse side for explanation of symbols and abbreviations

Analysis Report

Lancaster Laboratories
A division of Thermo Analytical Inc.

LLI Sample No. WW 2682143
Collected: 3/20/97 at 10:45 by CLC

Submitted: 3/22/97 Reported: 4/ 3/97
Discard: 4/11/97

MOW-PP-SW-2 Unspiked Grab Water Sample

Morgantown Ordnance - Project No. 66473
PPSW2 SDG#: MOW14-04BK

Account No: 07867
ICF Kaiser Engineers, Inc.
Gateway View Plaza
1600 W. Carson St.
Pittsburgh PA 15219

P.O. 66473
Rel.

CAT NO.	ANALYSIS NAME	AS RECEIVED RESULTS	LIMIT OF QUANTITATION	UNITS
7043	Aluminum TR	< 0.20	0.20	mg/l
7053	Copper TR	0.0388	0.0040	mg/l
7054	Iron TR	1.66	0.10	mg/l
7055	Lead TR	0.0104	0.0050	mg/l
7058	Manganese TR	0.259	0.0020	mg/l
7072	Zinc TR	0.271	0.020	mg/l
0259	Mercury	0.00079	0.00020	mg/l
1861	PAH's in Water			See Page 2
6030	PCBs in Water		1.	See Page 3
0539	Benzene	< 1.	1.	ug/l
0553	Base Neutrals			See Page 4
0554	Base Neutrals (cont)			See Page 5
0224	Chloride	11.8	1.0	mg/l
0237	Total Cyanide (water)	0.0150	0.0050	mg/l
0273	Total Organic Carbon	8.4	1.0	mg/l
	The Total Organic Carbon (TOC) result reported above was determined by measuring total carbon by a persulfate digestion/infrared detection method on an acidified sample which has been purged of inorganic carbon using nitrogen. It represents "non-purgeable TOC".			
0434	Phenols (water)	< 0.0050	0.0050	mg/l
1504	Fluoride	< 0.50	0.50	mg/l
0200	pH	6.87	0.010	
0206	Total Suspended Solids	30.4	9.0	mg/l
0231	Oil & Grease	< 6.0	6.0	mg/l
	The blank analyzed with this sample contained 2.1 mg/l of oil and grease. As directed in EPA method 413.1, the data reported above was corrected for the blank value.			
1553	Chemical Oxygen Demand	142.	16.	mg/l
6914	Ammonia-Nitrogen	< 0.20	0.20	mg/l

1 COPY TO ICF Kaiser Engineers, Inc. ATTN: Mr. Doug Taylor
1 COPY TO Data Package Group

Questions? Contact your Client Services Representative
De Brooks at (717) 656-2300
03:37:12 D 0002 13 129101 557988
320 120.00 00181050 ASR000

Respectfully Submitted
Ramona V. Layman
Manager, Metals/Leachates

Lancaster Laboratories
2425 New Holland Pike
P.O. Box 12425
Lancaster PA 17605-2425
717-656-2300 Fax 717-656-2681

MEMBER ACIL

Lancaster Laboratories
A division of Thermo Analytical Inc.

LLI Sample No. WW 2682143
Collected: 3/20/97 at 10:45 by CLC

Submitted: 3/22/97 Reported: 4/ 3/97
Discard: 4/11/97

MOW-PP-SW-2 Unspiked Grab Water Sample

Morgantown Ordnance - Project No. 66473
PPSW2 SDG#: MOW14-04BK

Account No: 07867
ICF Kaiser Engineers, Inc.
Gateway View Plaza
1600 W. Carson St.
Pittsburgh PA 15219

P.O. 66473
Rel.

CAT NO.	ANALYSIS NAME	AS RECEIVED RESULTS	LIMIT OF QUANTITATION	UNITS
PAH's in Water				
3280	Naphthalene	< 10.	10.	ug/l
3281	Acenaphthylene	< 20.	20.	ug/l
3282	Acenaphthene	< 20.	20.	ug/l
3283	Fluorene	< 2.	2.	ug/l
3284	Phenanthrene	< 2.	2.	ug/l
3285	Anthracene	< 1.	1.	ug/l
3286	Fluoranthene	< 0.5	0.5	ug/l
3287	Pyrene	< 2.	2.	ug/l
3288	Benzo(a)anthracene	< 0.1	0.1	ug/l
3289	Chrysene	< 1.	1.	ug/l
3290	Benzo(b)fluoranthene	< 0.2	0.2	ug/l
3291	Benzo(k)fluoranthene	< 0.1	0.1	ug/l
3292	Benzo(a)pyrene	< 0.2	0.2	ug/l
3293	Dibenzo(a,h)anthracene	< 0.2	0.2	ug/l
3294	Benzo(g,h,i)perylene	< 0.5	0.5	ug/l
3295	Indeno(1,2,3-cd)pyrene	< 0.5	0.5	ug/l

Questions? Contact your Client Services Representative
De Brooks at (717) 656-2300

Respectfully Submitted
Jenifer E. Hess, B.S.
Group Leader Pesticides/PCBs

Analysis Report

Lancaster Laboratories
A division of Thermo Analytical Inc.

LLI Sample No. WW 2682143
Collected: 3/20/97 at 10:45 by CLC

Submitted: 3/22/97 Reported: 4/ 3/97
Discard: 4/11/97

MOW-PP-SW-2 Unspiked Grab Water Sample

Morgantown Ordnance - Project No. 66473
PPSW2 SDG#: MOW14-04BK

Account No: 07867
ICF Kaiser Engineers, Inc.
Gateway View Plaza
1600 W. Carson St.
Pittsburgh PA 15219

P.O. 66473
Rel.

CAT NO.	ANALYSIS NAME	AS RECEIVED RESULTS	LIMIT OF QUANTITATION	UNITS
PCBs in Water				
0639	PCB-1016	< 1.0	1.0	ug/l
0640	PCB-1221	< 1.0	1.0	ug/l
0641	PCB-1232	< 1.0	1.0	ug/l
0642	PCB-1242	< 1.0	1.0	ug/l
0643	PCB-1248	< 1.0	1.0	ug/l
0644	PCB-1254	< 1.0	1.0	ug/l
0645	PCB-1260	< 1.0	1.0	ug/l

Questions? Contact your Client Services Representative
De Brooks at (717) 656-2300

Respectfully Submitted
Jenifer E. Hess, B.S.
Group Leader Pesticides/PCBs

Lancaster Laboratories
A division of Thermo Analytical Inc.

LLI Sample No. WW 2682143
Collected: 3/20/97 at 10:45 by CLC

Submitted: 3/22/97 Reported: 4/ 3/97
Discard: 4/11/97

MOW-PP-SW-2 Unspiked Grab Water Sample

Morgantown Ordnance - Project No. 66473
PPSW2 SDG#: MOW14-04BK

Account No: 07867
ICF Kaiser Engineers, Inc.
Gateway View Plaza
1600 W. Carson St.
Pittsburgh PA 15219

P.O. 66473
Rel.

CAT NO.	ANALYSIS NAME	AS RECEIVED RESULTS	LIMIT OF QUANTITATION	UNITS
Base Neutrals				
0689	hexachlorobenzene	< 10.	10.	ug/l

Questions? Contact your Client Services Representative
De Brooks at (717) 656-2300

Respectfully Submitted
Christine M. Ratcliff, B.S.
Senior Chemist, GC/MS

MEMBER ACIL
Lancaster Laboratories
2425 New Holland Pike
PO Box 12425
Lancaster PA 17605-2425
717-656-2300 Fax 717-656-2681
See reverse side for explanation of symbols and abbreviations
2216 Rev. 5/01/96

Analysis Report

Lancaster Laboratories
A division of Thermo Analytical Inc.

LLI Sample No. WW 2682143
Collected: 3/20/97 at 10:45 by CLC

Submitted: 3/22/97 Reported: 4/ 3/97
Discard: 4/11/97

MOW-PP-SW-2 Unspiked Grab Water Sample

Morgantown Ordnance - Project No. 66473
PPSW2 SDG#: MOW14-04BK

Account No: 07867
ICF Kaiser Engineers, Inc.
Gateway View Plaza
1600 W. Carson St.
Pittsburgh PA 15219

P.O. 66473
Rel.

CAT NO.	ANALYSIS NAME	AS RECEIVED RESULTS	LIMIT OF QUANTITATION	UNITS
Base Neutrals (cont)				

Questions? Contact your Client Services Representative
De Brooks at (717) 656-2300

Respectfully Submitted
Christine M. Ratcliff, B.S.
Senior Chemist, GC/MS

Lancaster Laboratories
2425 New Holland Pike
P.O. Box 12425
Lancaster, PA 17605-2425
(717) 656-2300 Fax (717) 656-2681

MEMBER ACIL

See reverse side for explanation of symbols and abbreviations

2212 Rev. 5 01 96

Analysis Report

Lancaster Laboratories
A division of Thermo Analytical Inc.

LLI Sample No. WW 2682144
Collected: 3/20/97 at 10:45 by CLC

Submitted: 3/22/97 Reported: 4/ 3/97
Discard: 4/11/97

MOW-PP-SW-2MS Matrix Spike Grab Water Sample

Morgantown Ordnance - Project No. 66473
PPSW2 SDG#: MOW14-04MS

Account No: 07867
ICF Kaiser Engineers, Inc.
Gateway View Plaza
1600 W. Carson St.
Pittsburgh PA 15219

P.O. 66473
Rel.

CAT NO.	ANALYSIS NAME	AS RECEIVED RESULTS	LIMIT OF QUANTITATION	UNITS
7043	Aluminum TR	2.44	0.20	mg/l
7053	Copper TR	0.316	0.0040	mg/l
7054	Iron TR	2.73	0.10	mg/l
7055	Lead TR	0.536	0.0050	mg/l
7058	Manganese TR	0.761	0.0020	mg/l
7072	Zinc TR	0.784	0.020	mg/l
0259	Mercury	0.00136	0.00020	mg/l
1861	PAH's in Water			See Page 2
6030	PCBs in Water		1.	See Page 3
0539	Benzene	100.	5.	ug/l
0553	Base Neutrals			See Page 4
0554	Base Neutrals (cont)			See Page 5
0224	Chloride	21.3	1.0	mg/l
0237	Total Cyanide (water)	0.207	0.0050	mg/l
0273	Total Organic Carbon	16.1	1.0	mg/l
	The Total Organic Carbon (TOC) result reported above was determined by measuring total carbon by a persulfate digestion/infrared detection method on an acidified sample which has been purged of inorganic carbon using nitrogen. It represents "non-purgeable TOC".			
0434	Phenols (water)	0.183	0.0050	mg/l
1504	Fluoride	5.27	0.50	mg/l
0231	Oil & Grease	76.	18.	mg/l
	The blank analyzed with this sample contained 2.1 mg/l of oil and grease. As directed in EPA method 413.1, the data reported above was corrected for the blank value.			
1553	Chemical Oxygen Demand	164.	40.	mg/l
	The matrix spike and matrix spike duplicate analyses were taken from designated sample containers that appeared noticeably cleaner than the sample taken from the designated unspiked container, hence the poor spike recoveries obtained for chemical oxygen demand.			
6914	Ammonia-Nitrogen	7.67	0.20	mg/l

1 COPY TO ICF Kaiser Engineers, Inc. ATTN: Mr. Doug Taylor
1 COPY TO Data Package Group

Questions? Contact your Client Services Representative
De Brooks at (717) 656-2300
03:37:52 D 0002 13 129101 557988
320 0.00 00000000 ASR000

Respectfully Submitted
Ramona V. Layman
Manager, Metals/Leachates

MEMBER ACIL
Lancaster Laboratories
2425 New Holland Pike
P.O. Box 12425
Lancaster, PA 17605-2425
717-656-2300 Fax 717-656-2681

See reverse side for explanation of symbols and abbreviations

Analysis Report

Lancaster Laboratories
A division of Thermo Analytical Inc.

LLI Sample No. WW 2682144
Collected: 3/20/97 at 10:45 by CLC

Submitted: 3/22/97 Reported: 4/ 3/97
Discard: 4/11/97

MOW-PP-SW-2MS Matrix Spike Grab Water Sample

Morgantown Ordnance - Project No. 66473
PPSW2 SDG#: MOW14-04MS

Account No: 07867
ICF Kaiser Engineers, Inc.
Gateway View Plaza
1600 W. Carson St.
Pittsburgh PA 15219

P.O. 66473
Rel.

CAT NO.	ANALYSIS NAME	AS RECEIVED RESULTS	LIMIT OF QUANTITATION	UNITS
PAH's in Water				
3280	Naphthalene	170.	10.	ug/l
3281	Acenaphthylene	190.	20.	ug/l
3282	Acenaphthene	200.	20.	ug/l
3283	Fluorene	20.	2.	ug/l
3284	Phenanthrene	6.	2.	ug/l
3285	Anthracene	3.	1.	ug/l
3286	Fluoranthene	3.2	0.5	ug/l
3287	Pyrene	21.	2.	ug/l
3288	Benzo(a)anthracene	1.7	0.1	ug/l
3289	Chrysene	6.	1.	ug/l
3290	Benzo(b)fluoranthene	1.5	0.2	ug/l
3291	Benzo(k)fluoranthene	1.4	0.1	ug/l
3292	Benzo(a)pyrene	1.8	0.2	ug/l
3293	Dibenzo(a,h)anthracene	2.7	0.2	ug/l
3294	Benzo(g,h,i)perylene	12.5	0.5	ug/l
3295	Indeno(1,2,3-cd)pyrene	6.2	0.5	ug/l

Questions? Contact your Client Services Representative
De Brooks at (717) 656-2300

Respectfully Submitted
Jenifer E. Hess, B.S.
Group Leader Pesticides/PCBs

Analysis Report

Lancaster Laboratories
A division of Thermo Analytical Inc.

LLI Sample No. WW 2682144
Collected: 3/20/97 at 10:45 by CLC

Submitted: 3/22/97 Reported: 4/ 3/97
Discard: 4/11/97

MOW-PP-SW-2MS Matrix Spike Grab Water Sample

Morgantown Ordnance - Project No. 66473
PPSW2 SDG#: MOW14-04MS

Account No: 07867
ICF Kaiser Engineers, Inc.
Gateway View Plaza
1600 W. Carson St.
Pittsburgh PA 15219

P.O. 66473
Rel.

CAT NO.	ANALYSIS NAME	AS RECEIVED RESULTS	LIMIT OF QUANTITATION	UNITS
PCBs in Water				
0639	PCB-1016	4.0	1.0	ug/l
0640	PCB-1221	< 1.0	1.0	ug/l
0641	PCB-1232	< 1.0	1.0	ug/l
0642	PCB-1242	< 1.0	1.0	ug/l
0643	PCB-1248	< 1.0	1.0	ug/l
0644	PCB-1254	< 1.0	1.0	ug/l
0645	PCB-1260	4.3	1.0	ug/l

Questions? Contact your Client Services Representative
De Brooks at (717) 656-2300

Respectfully Submitted
Jenifer E. Hess, B.S.
Group Leader Pesticides/PCBs

Analysis Report

Lancaster Laboratories
A division of Thermo Analytical Inc.

LLI Sample No. WW 2682144
Collected: 3/20/97 at 10:45 by CLC

Submitted: 3/22/97 Reported: 4/ 3/97
Discard: 4/11/97

MOW-PP-SW-2MS Matrix Spike Grab Water Sample

Morgantown Ordnance - Project No. 66473
PPSW2 SDG#: MOW14-04MS

Account No: 07867
ICF Kaiser Engineers, Inc.
Gateway View Plaza
1600 W. Carson St.
Pittsburgh PA 15219

P.O. 66473
Rel.

CAT NO.	ANALYSIS NAME	AS RECEIVED RESULTS	LIMIT OF QUANTITATION	UNITS
Base Neutrals				
0689	hexachlorobenzene	82.	10.	ug/l

Questions? Contact your Client Services Representative
De Brooks at (717) 656-2300

Respectfully Submitted
Christine M. Ratcliff, B.S.
Senior Chemist, GC/MS

MEMBER ACIL
Lancaster Laboratories
2425 New Holland Pike
P.O. Box 12425
Lancaster, PA 17605-2425
717-656-2300 Fax 717-656-2681

See reverse side for explanation of symbols and abbreviations

Analysis Report

Lancaster Laboratories
A division of Thermo Analytical Inc.

LLI Sample No. WW 2682144
Collected: 3/20/97 at 10:45 by CLC

Submitted: 3/22/97 Reported: 4/ 3/97
Discard: 4/11/97

MOW-PP-SW-2MS Matrix Spike Grab Water Sample

Morgantown Ordnance - Project No. 66473
PPSW2 SDG#: MOW14-04MS

Account No: 07867
ICF Kaiser Engineers, Inc.
Gateway View Plaza
1600 W. Carson St.
Pittsburgh PA 15219

P.O. 66473
Rel.

CAT NO.	ANALYSIS NAME	AS RECEIVED RESULTS	LIMIT OF QUANTITATION	UNITS
Base Neutrals (cont)				

Questions? Contact your Client Services Representative
De Brooks at (717) 656-2300

Respectfully Submitted
Christine M. Ratcliff, B.S.
Senior Chemist, GC/MS

MEMBER ACIL

See reverse side for explanation of symbols and abbreviations

Analysis Report

Lancaster Laboratories
A division of Thermo Analytical Inc.

LLI Sample No. WW 2682145
Collected: 3/20/97 at 10:45 by CLC

Submitted: 3/22/97 Reported: 4/ 3/97
Discard: 4/11/97

MOW-PP-SW-2MSD Matrix Spike Dup. Grab Water Sample

Morgantown Ordnance - Project No. 66473
PPSW2 SDG#: MOW14-04MSD

Account No: 07867
ICF Kaiser Engineers, Inc.
Gateway View Plaza
1600 W. Carson St.
Pittsburgh PA 15219

P.O. 66473
Rel.

CAT NO.	ANALYSIS NAME	AS RECEIVED RESULTS	LIMIT OF QUANTITATION	UNITS
7043	Aluminum TR	2.42	0.20	mg/l
7053	Copper TR	0.313	0.0040	mg/l
7054	Iron TR	2.61	0.10	mg/l
7055	Lead TR	0.552	0.0050	mg/l
7058	Manganese TR	0.725	0.0020	mg/l
7072	Zinc TR	0.803	0.020	mg/l
0259	Mercury	0.00174	0.00020	mg/l
1861	PAH's in Water			See Page 2
6030	PCBs in Water		1.	See Page 3
0539	Benzene	100.	5.	ug/l
0553	Base Neutrals			See Page 4
0554	Base Neutrals (cont)			See Page 5
0224	Chloride	21.6	1.0	mg/l
0237	Total Cyanide (water)	0.208	0.0050	mg/l
0273	Total Organic Carbon	13.6	1.0	mg/l

The Total Organic Carbon (TOC) result reported above was determined by measuring total carbon by a persulfate digestion/infrared detection method on an acidified sample which has been purged of inorganic carbon using nitrogen. It represents "non-purgeable TOC".
The matrix spike duplicate recovery was out of specification at 53%. The acceptance window is 75% to 125%. The blank and LCS/LCSD analyzed with this sample were within specifications.

0434	Phenols (water)	0.194	0.0050	mg/l
1504	Fluoride	5.14	0.50	mg/l
0231	Oil & Grease	78.	18.	mg/l

The blank analyzed with this sample contained 2.1 mg/l of oil and grease. As directed in EPA method 413.1, the data reported above was corrected for the blank value.

1553	Chemical Oxygen Demand	158.	40.	mg/l

The matrix spike and matrix spike duplicate analyses were taken from designated sample containers that appeared noticeably cleaner than the sample taken from the designated unspiked container, hence the poor spike recoveries obtained for chemical oxygen demand.

6914	Ammonia-Nitrogen	7.10	0.20	mg/l

1 COPY TO ICF Kaiser Engineers, Inc. ATTN: Mr. Doug Taylor
1 COPY TO Data Package Group

Questions? Contact your Client Services Representative
De Brooks at (717) 656-2300
03:38:35 D 0002 13 129101 557988
320 0.00 00000000 ASR000

Respectfully Submitted
Ramona V. Layman
Manager, Metals/Leachates

MEMBER ACIL

Lancaster Laboratories
2425 New Holland Pike
P.O. Box 12425
Lancaster PA 17605-2425
(717) 656-2300 Fax (717) 656-2681

Analysis Report

Lancaster Laboratories
A division of Thermo Analytical Inc.

LLI Sample No. WW 2682145
Collected: 3/20/97 at 10:45 by CLC

Submitted: 3/22/97 Reported: 4/ 3/97
Discard: 4/11/97

MOW-PP-SW-2MSD Matrix Spike Dup. Grab Water Sample

Morgantown Ordnance - Project No. 66473
PPSW2 SDG#: MOW14-04MSD

Account No: 07867
ICF Kaiser Engineers, Inc.
Gateway View Plaza
1600 W. Carson St.
Pittsburgh PA 15219

P.O. 66473
Rel.

CAT NO.	ANALYSIS NAME	AS RECEIVED RESULTS	LIMIT OF QUANTITATION	UNITS
PAH's in Water				
3280	Naphthalene	160.	10.	ug/l
3281	Acenaphthylene	190.	20.	ug/l
3282	Acenaphthene	190.	20.	ug/l
3283	Fluorene	19.	2.	ug/l
3284	Phenanthrene	6.	2.	ug/l
3285	Anthracene	3.	1.	ug/l
3286	Fluoranthene	3.2	0.5	ug/l
3287	Pyrene	21.	2.	ug/l
3288	Benzo(a)anthracene	1.6	0.1	ug/l
3289	Chrysene	6.	1.	ug/l
3290	Benzo(b)fluoranthene	1.4	0.2	ug/l
3291	Benzo(k)fluoranthene	1.3	0.1	ug/l
3292	Benzo(a)pyrene	1.6	0.2	ug/l
3293	Dibenzo(a,h)anthracene	2.5	0.2	ug/l
3294	Benzo(g,h,i)perylene	11.8	0.5	ug/l
3295	Indeno(1,2,3-cd)pyrene	5.9	0.5	ug/l

Questions? Contact your Client Services Representative
De Brooks at (717) 656-2300

Respectfully Submitted
Jenifer E. Hess, B.S.
Group Leader Pesticides/PCBs

Analysis Report

Lancaster Laboratories
A division of Thermo Analytical Inc.

LLI Sample No. WW 2682145
Collected: 3/20/97 at 10:45 by CLC

Submitted: 3/22/97 Reported: 4/ 3/97
Discard: 4/11/97

MOW-PP-SW-2MSD Matrix Spike Dup. Grab Water Sample

Morgantown Ordnance - Project No. 66473
PPSW2 SDG#: MOW14-04MSD

Account No: 07867
ICF Kaiser Engineers, Inc.
Gateway View Plaza
1600 W. Carson St.
Pittsburgh PA 15219

P.O. 66473
Rel.

CAT NO.	ANALYSIS NAME	AS RECEIVED RESULTS	LIMIT OF QUANTITATION	UNITS
PCBs in Water				
0639	PCB-1016	4.0	1.0	ug/l
0640	PCB-1221	< 1.0	1.0	ug/l
0641	PCB-1232	< 1.0	1.0	ug/l
0642	PCB-1242	< 1.0	1.0	ug/l
0643	PCB-1248	< 1.0	1.0	ug/l
0644	PCB-1254	< 1.0	1.0	ug/l
0645	PCB-1260	4.3	1.0	ug/l

Questions? Contact your Client Services Representative
De Brooks at (717) 656-2300

Respectfully Submitted
Jenifer E. Hess, B.S.
Group Leader Pesticides/PCBs

Analysis Report

Lancaster Laboratories
A division of Thermo Analytical Inc.

LLI Sample No. WW 2682145
Collected: 3/20/97 at 10:45 by CLC

Submitted: 3/22/97 Reported: 4/ 3/97
Discard: 4/11/97

MOW-PP-SW-2MSD Matrix Spike Dup. Grab Water Sample

Morgantown Ordnance - Project No. 66473
PPSW2 SDG#: MOW14-04MSD

Account No: 07867
ICF Kaiser Engineers, Inc.
Gateway View Plaza
1600 W. Carson St.
Pittsburgh PA 15219

P.O. 66473
Rel.

CAT NO.	ANALYSIS NAME	AS RECEIVED RESULTS	LIMIT OF QUANTITATION	UNITS
Base Neutrals				
0689	hexachlorobenzene	86.	10.	ug/l

Questions? Contact your Client Services Representative
De Brooks at (717) 656-2300

Respectfully Submitted
Christine M. Ratcliff, B.S.
Senior Chemist, GC/MS

MEMBER ACIL

See reverse side for explanation of symbols and abbreviations

Analysis Report

Lancaster Laboratories
A division of Thermo Analytical Inc.

LLI Sample No. WW 2682145
Collected: 3/20/97 at 10:45 by CLC

Submitted: 3/22/97 Reported: 4/ 3/97
Discard: 4/11/97

MOW-PP-SW-2MSD Matrix Spike Dup. Grab Water Sample

Morgantown Ordnance - Project No. 66473
PPSW2 SDG#: MOW14-04MSD

Account No: 07867
ICF Kaiser Engineers, Inc.
Gateway View Plaza
1600 W. Carson St.
Pittsburgh PA 15219

P.O. 66473
Rel.

CAT NO.	ANALYSIS NAME	AS RECEIVED RESULTS	LIMIT OF QUANTITATION	UNITS
Base Neutrals (cont)				

Questions? Contact your Client Services Representative
De Brooks at (717) 656-2300

Respectfully Submitted
Christine M. Ratcliff, B.S.
Senior Chemist, GC/MS

MEMBER ACIL

See reverse side for explanation of symbols and abbreviations

2216 Rev 5.01.96

Analysis Report

Lancaster Laboratories
A division of Thermo Analytical Inc.

LLI Sample No. WW 2682148
Collected: 3/20/97 at 13:45 by CLC

Submitted: 3/22/97 Reported: 4/ 3/97
Discard: 4/11/97

C-SW-2A-2 Grab Water Sample

Morgantown Ordnance - Project No. 66473
CS2A2 SDG#: MOW14-06

Account No: 07867
ICF Kaiser Engineers, Inc.
Gateway View Plaza
1600 W. Carson St.
Pittsburgh PA 15219

P.O. 66473
Rel.

CAT NO.	ANALYSIS NAME	AS RECEIVED RESULTS	LIMIT OF QUANTITATION	UNITS
7043	Aluminum TR	< 0.20	0.20	mg/l
7053	Copper TR	0.0056	0.0040	mg/l
7054	Iron TR	0.10	0.10	mg/l
7055	Lead TR	< 0.0050	0.0050	mg/l
7058	Manganese TR	0.0165	0.0020	mg/l
7072	Zinc TR	< 0.020	0.020	mg/l
0259	Mercury	< 0.00020	0.00020	mg/l
1861	PAH's in Water			See Page 2
6030	PCBs in Water		1.	See Page 3
0539	Benzene	< 1.	1.	ug/l
0553	Base Neutrals			See Page 4
0554	Base Neutrals (cont)			See Page 5
0224	Chloride	10.3	1.0	mg/l
0237	Total Cyanide (water)	< 0.0050	0.0050	mg/l
0273	Total Organic Carbon	6.2	1.0	mg/l
	The Total Organic Carbon (TOC) result reported above was determined by measuring total carbon by a persulfate digestion/infrared detection method on an acidified sample which has been purged of inorganic carbon using nitrogen. It represents "non-purgeable TOC".			
0434	Phenols (water)	< 0.0050	0.0050	mg/l
1504	Fluoride	0.79	0.50	mg/l
0200	pH	7.60	0.010	
0206	Total Suspended Solids	< 9.0	9.0	mg/l
0231	Oil & Grease	< 6.0	6.0	mg/l
	The blank analyzed with this sample contained 2.1 mg/l of oil and grease. As directed in EPA method 413.1, the data reported above was corrected for the blank value.			
1553	Chemical Oxygen Demand	21.2	8.0	mg/l
6914	Ammonia-Nitrogen	< 0.20	0.20	mg/l

1 COPY TO ICF Kaiser Engineers, Inc. ATTN: Mr. Doug Taylor
1 COPY TO Data Package Group

Questions? Contact your Client Services Representative
De Brooks at (717) 656-2300
03:40:07 D 0002 13 129101 557988
320 120.00 00181050 ASR000

Respectfully Submitted
Ramona V. Layman
Manager, Metals/Leachates

Lancaster Laboratories
A division of Thermo Analytical Inc.

LLI Sample No. WW 2682148
Collected: 3/20/97 at 13:45 by CLC

Submitted: 3/22/97 Reported: 4/ 3/97
Discard: 4/11/97

C-SW-2A-2 Grab Water Sample

Morgantown Ordnance - Project No. 66473
CS2A2 SDG#: MOW14-06

Account No: 07867
ICF Kaiser Engineers, Inc.
Gateway View Plaza
1600 W. Carson St.
Pittsburgh PA 15219

P.O. 66473
Rel.

CAT NO.	ANALYSIS NAME	AS RECEIVED RESULTS	LIMIT OF QUANTITATION	UNITS
PAH's in Water				
3280	Naphthalene	< 10.	10.	ug/l
3281	Acenaphthylene	< 20.	20.	ug/l
3282	Acenaphthene	< 20.	20.	ug/l
3283	Fluorene	< 2.	2.	ug/l
3284	Phenanthrene	< 2.	2.	ug/l
3285	Anthracene	< 1.	1.	ug/l
3286	Fluoranthene	< 0.5	0.5	ug/l
3287	Pyrene	< 2.	2.	ug/l
3288	Benzo(a)anthracene	< 0.1	0.1	ug/l
3289	Chrysene	< 1.	1.	ug/l
3290	Benzo(b)fluoranthene	< 0.2	0.2	ug/l
3291	Benzo(k)fluoranthene	< 0.1	0.1	ug/l
3292	Benzo(a)pyrene	< 0.2	0.2	ug/l
3293	Dibenzo(a,h)anthracene	< 0.2	0.2	ug/l
3294	Benzo(g,h,i)perylene	< 0.5	0.5	ug/l
3295	Indeno(1,2,3-cd)pyrene	< 0.5	0.5	ug/l

Questions? Contact your Client Services Representative
De Brooks at (717) 656-2300

Respectfully Submitted
Jenifer E. Hess, B.S.
Group Leader Pesticides/PCBs

Analysis Report

Lancaster Laboratories
A division of Thermo Analytical Inc.

LLI Sample No. WW 2682148
Collected: 3/20/97 at 13:45 by CLC

Submitted: 3/22/97 Reported: 4/ 3/97
Discard: 4/11/97

C-SW-2A-2 Grab Water Sample

Morgantown Ordnance - Project No. 66473
CS2A2 SDG#: MOW14-06

Account No: 07867
ICF Kaiser Engineers, Inc.
Gateway View Plaza
1600 W. Carson St.
Pittsburgh PA 15219

P.O. 66473
Rel.

CAT NO.	ANALYSIS NAME	AS RECEIVED RESULTS	LIMIT OF QUANTITATION	UNITS
PCBs in Water				
0639	PCB-1016	< 1.0	1.0	ug/l
0640	PCB-1221	< 1.0	1.0	ug/l
0641	PCB-1232	< 1.0	1.0	ug/l
0642	PCB-1242	< 1.0	1.0	ug/l
0643	PCB-1248	< 1.0	1.0	ug/l
0644	PCB-1254	< 1.0	1.0	ug/l
0645	PCB-1260	< 1.0	1.0	ug/l

Questions? Contact your Client Services Representative
De Brooks at (717) 656-2300

Respectfully Submitted
Jenifer E. Hess, B.S.
Group Leader Pesticides/PCBs

Lancaster Laboratories
A division of Thermo Analytical Inc.

LLI Sample No. WW 2682148
Collected: 3/20/97 at 13:45 by CLC

Submitted: 3/22/97 Reported: 4/ 3/97
Discard: 4/11/97

C-SW-2A-2 Grab Water Sample

Morgantown Ordnance - Project No. 66473
CS2A2 SDG#: MOW14-06

Account No: 07867
ICF Kaiser Engineers, Inc.
Gateway View Plaza
1600 W. Carson St.
Pittsburgh PA 15219

P.O. 66473
Rel.

CAT NO.	ANALYSIS NAME	AS RECEIVED RESULTS	LIMIT OF QUANTITATION	UNITS
Base Neutrals				
0689	hexachlorobenzene	< 11.	11.	ug/l
	Due to insufficient sample, the quantitation limits for the GC/MS semivolatile compounds were raised.			

Questions? Contact your Client Services Representative
De Brooks at (717) 656-2300

Respectfully Submitted
Christine M. Ratcliff, B.S.
Senior Chemist, GC/MS

MEMBER ACIL
Lancaster Laboratories
2425 New Holland Pike
P.O. Box 12425
Lancaster PA 17605-2425
717-656-2300 Fax 717-656-2681
See reverse side for explanation of symbols and abbreviations
2216 Rev. 5/01/96

Analysis Report

Lancaster Laboratories
A division of Thermo Analytical Inc.

LLI Sample No. WW 2682148
Collected: 3/20/97 at 13:45 by CLC

Submitted: 3/22/97 Reported: 4/ 3/97
Discard: 4/11/97

C-SW-2A-2 Grab Water Sample

Morgantown Ordnance - Project No. 66473
CS2A2 SDG#: MOW14-06

Account No: 07867
ICF Kaiser Engineers, Inc.
Gateway View Plaza
1600 W. Carson St.
Pittsburgh PA 15219

P.O. 66473
Rel.

CAT NO.	ANALYSIS NAME	AS RECEIVED RESULTS	LIMIT OF QUANTITATION	UNITS
Base Neutrals (cont)				

Questions? Contact your Client Services Representative
De Brooks at (717) 656-2300

Respectfully Submitted
Christine M. Ratcliff, B.S.
Senior Chemist, GC/MS

Lancaster Laboratories
2425 New Holland Pike
PO Box 12425
Lancaster PA 17605-2425
717-656-2300 Fax 717-656-2681

MEMBER ACIL

See reverse side for explanation of symbols and abbreviations

Analysis Report

Lancaster Laboratories
A division of Thermo Analytical Inc.

LLI Sample No. WW 2682150
Collected: 3/20/97 at 13:50 by CLC

Submitted: 3/22/97 Reported: 4/ 3/97
Discard: 4/11/97

C-SW-2A-2D Grab Water Sample

Morgantown Ordnance - Project No. 66473
C2A2D SDG#: MOW14-08

Account No: 07867
ICF Kaiser Engineers, Inc.
Gateway View Plaza
1600 W. Carson St.
Pittsburgh PA 15219

P.O. 66473
Rel.

CAT NO.	ANALYSIS NAME	AS RECEIVED RESULTS	LIMIT OF QUANTITATION	UNITS	
7043	Aluminum TR	< 0.20	0.20	mg/l	
7053	Copper TR	0.0074	0.0040	mg/l	
7054	Iron TR	0.13	0.10	mg/l	
7055	Lead TR	< 0.0050	0.0050	mg/l	
7058	Manganese TR	0.0167	0.0020	mg/l	
7072	Zinc TR	< 0.020	0.020	mg/l	
0259	Mercury	< 0.00020	0.00020	mg/l	
1861	PAH's in Water			See Page	2
6030	PCBs in Water		1.	See Page	3
0539	Benzene	< 1.	1.	ug/l	
0553	Base Neutrals			See Page	4
0554	Base Neutrals (cont)			See Page	5
0224	Chloride	9.0	1.0	mg/l	
0237	Total Cyanide (water)	< 0.0050	0.0050	mg/l	
0273	Total Organic Carbon	6.3	1.0	mg/l	
	The Total Organic Carbon (TOC) result reported above was determined by measuring total carbon by a persulfate digestion/infrared detection method on an acidified sample which has been purged of inorganic carbon using nitrogen. It represents "non-purgeable TOC".				
0434	Phenols (water)	< 0.0050	0.0050	mg/l	
1504	Fluoride	0.88	0.50	mg/l	
0200	pH	7.86	0.010		
0206	Total Suspended Solids	< 9.0	9.0	mg/l	
0231	Oil & Grease	< 6.0	6.0	mg/l	
	The blank analyzed with this sample contained 2.1 mg/l of oil and grease. As directed in EPA method 413.1, the data reported above was corrected for the blank value.				
1553	Chemical Oxygen Demand	19.2	8.0	mg/l	
6914	Ammonia-Nitrogen	< 0.20	0.20	mg/l	

1 COPY TO ICF Kaiser Engineers, Inc. ATTN: Mr. Doug Taylor
1 COPY TO Data Package Group

Questions? Contact your Client Services Representative
De Brooks at (717) 656-2300
03:41:36 D 0002 13 129101 557988
320 120.00 00181050 ASR000

Respectfully Submitted
Ramona V. Layman
Manager, Metals/Leachates

MEMBER ACIL
Lancaster Laboratories
2425 New Holland Pike
P.O. Box 12425
Lancaster, PA 17605-2425
717-656-2300 Fax 717-656-2681

See reverse side for explanation of symbols and abbreviations

Analysis Report

Lancaster Laboratories
A division of Thermo Analytical Inc.

LLI Sample No. WW 2682150
Collected: 3/20/97 at 13:50 by CLC

Submitted: 3/22/97 Reported: 4/ 3/97
Discard: 4/11/97

C-SW-2A-2D Grab Water Sample

Morgantown Ordnance - Project No. 66473
C2A2D SDG#: MOW14-08

Account No: 07867
ICF Kaiser Engineers, Inc.
Gateway View Plaza
1600 W. Carson St.
Pittsburgh PA 15219

P.O. 66473
Rel.

CAT NO.	ANALYSIS NAME	AS RECEIVED RESULTS	LIMIT OF QUANTITATION	UNITS
PAH's in Water				
3280	Naphthalene	< 10.	10.	ug/l
3281	Acenaphthylene	< 20.	20.	ug/l
3282	Acenaphthene	< 20.	20.	ug/l
3283	Fluorene	< 2.	2.	ug/l
3284	Phenanthrene	< 2.	2.	ug/l
3285	Anthracene	< 1.	1.	ug/l
3286	Fluoranthene	< 0.5	0.5	ug/l
3287	Pyrene	< 2.	2.	ug/l
3288	Benzo(a)anthracene	< 0.1	0.1	ug/l
3289	Chrysene	< 1.	1.	ug/l
3290	Benzo(b)fluoranthene	< 0.2	0.2	ug/l
3291	Benzo(k)fluoranthene	< 0.1	0.1	ug/l
3292	Benzo(a)pyrene	< 0.2	0.2	ug/l
3293	Dibenzo(a,h)anthracene	< 0.2	0.2	ug/l
3294	Benzo(g,h,i)perylene	< 0.5	0.5	ug/l
3295	Indeno(1,2,3-cd)pyrene	< 0.5	0.5	ug/l

Questions? Contact your Client Services Representative
De Brooks at (717) 656-2300

Respectfully Submitted
Jenifer E. Hess, B.S.
Group Leader Pesticides/PCBs

MEMBER ACIL
Lancaster Laboratories
2425 New Holland Pike
PO Box 12425
Lancaster PA 17605-2425
717-656-2300 Fax 717-656-2681

See reverse side for explanation of symbols and abbreviations

Analysis Report

Lancaster Laboratories
A division of Thermo Analytical Inc.

LLI Sample No. WW 2682150
Collected: 3/20/97 at 13:50 by CLC

Submitted: 3/22/97 Reported: 4/ 3/97
Discard: 4/11/97

C-SW-2A-2D Grab Water Sample

Morgantown Ordnance - Project No. 66473
C2A2D SDG#: MOW14-08

Account No: 07867
ICF Kaiser Engineers, Inc.
Gateway View Plaza
1600 W. Carson St.
Pittsburgh PA 15219

P.O. 66473
Rel.

CAT NO.	ANALYSIS NAME	AS RECEIVED RESULTS	LIMIT OF QUANTITATION	UNITS
PCBs in Water				
0639	PCB-1016	< 1.	1.	ug/l
0640	PCB-1221	< 1.	1.	ug/l
0641	PCB-1232	< 1.	1.	ug/l
0642	PCB-1242	< 1.	1.	ug/l
0643	PCB-1248	< 1.	1.	ug/l
0644	PCB-1254	< 1.	1.	ug/l
0645	PCB-1260	< 1.	1.	ug/l

Questions? Contact your Client Services Representative
De Brooks at (717) 656-2300

Respectfully Submitted
Jenifer E. Hess, B.S.
Group Leader Pesticides/PCBs

Analysis Report

Lancaster Laboratories
A division of Thermo Analytical Inc.

LLI Sample No. WW 2682150
Collected: 3/20/97 at 13:50 by CLC

Submitted: 3/22/97 Reported: 4/ 3/97
Discard: 4/11/97

C-SW-2A-2D Grab Water Sample

Morgantown Ordnance - Project No. 66473
C2A2D SDG#: MOW14-08

Account No: 07867
ICF Kaiser Engineers, Inc.
Gateway View Plaza
1600 W. Carson St.
Pittsburgh PA 15219

P.O. 66473
Rel.

CAT NO.	ANALYSIS NAME	AS RECEIVED RESULTS	LIMIT OF QUANTITATION	UNITS
Base Neutrals				
0689	hexachlorobenzene	< 10.	10.	ug/l

Questions? Contact your Client Services Representative
De Brooks at (717) 656-2300

Respectfully Submitted
Christine M. Ratcliff, B.S.
Senior Chemist, GC/MS

Lancaster Laboratories
A division of Thermo Analytical Inc.

LLI Sample No. WW 2682150
Collected: 3/20/97 at 13:50 by CLC

Submitted: 3/22/97 Reported: 4/ 3/97
Discard: 4/11/97

C-SW-2A-2D Grab Water Sample

Morgantown Ordnance - Project No. 66473
C2A2D SDG#: MOW14-08

Account No: 07867
ICF Kaiser Engineers, Inc.
Gateway View Plaza
1600 W. Carson St.
Pittsburgh PA 15219

P.O. 66473
Rel.

CAT NO.	ANALYSIS NAME	AS RECEIVED RESULTS	LIMIT OF QUANTITATION	UNITS
	Base Neutrals (cont)			

Questions? Contact your Client Services Representative
De Brooks at (717) 656-2300

Respectfully Submitted
Christine M. Ratcliff, B.S.
Senior Chemist, GC/MS

Analysis Report

Lancaster Laboratories
A division of Thermo Analytical Inc.

LLI Sample No. WW 2682140
Collected: 3/20/97 at 16:00 by CLC

Submitted: 3/22/97 Reported: 4/ 3/97
Discard: 4/11/97

C-SW-5A-2 Grab Water Sample

Morgantown Ordnance - Project No. 66473
SW5A2 SDG#: MOW14-01

Account No: 07867
ICF Kaiser Engineers, Inc.
Gateway View Plaza
1600 W. Carson St.
Pittsburgh PA 15219

P.O. 66473
Rel.

CAT NO.	ANALYSIS NAME	AS RECEIVED RESULTS	LIMIT OF QUANTITATION	UNITS
7043	Aluminum TR	< 0.20	0.20	mg/l
7053	Copper TR	0.0064	0.0040	mg/l
7054	Iron TR	0.91	0.10	mg/l
7055	Lead TR	< 0.0050	0.0050	mg/l
7058	Manganese TR	0.0796	0.0020	mg/l
7072	Zinc TR	0.022	0.020	mg/l
0259	Mercury	< 0.00020	0.00020	mg/l
1861	PAH's in Water			See Page 2
6030	PCBs in Water		1.	See Page 3
0539	Benzene	70.	2.	ug/l
	Due to the presence of unidentified late eluting peaks in this sample. the surrogate standard recovery is above the range of specifications.			
0553	Base Neutrals			See Page 4
0554	Base Neutrals (cont)			See Page 5
0224	Chloride	4.8	1.0	mg/l
0237	Total Cyanide (water)	0.0243	0.0050	mg/l
0273	Total Organic Carbon	5.1	1.0	mg/l
	The Total Organic Carbon (TOC) result reported above was determined by measuring total carbon by a persulfate digestion/infrared detection method on an acidified sample which has been purged of inorganic carbon using nitrogen. It represents "non-purgeable TOC".			
0434	Phenols (water)	0.0122	0.0050	mg/l
1504	Fluoride	< 0.50	0.50	mg/l
0200	pH	6.47	0.010	
0206	Total Suspended Solids	< 9.0	9.0	mg/l
0231	Oil & Grease	< 6.0	6.0	mg/l
	The blank analyzed with this sample contained 2.1 mg/l of oil and grease. As directed in EPA method 413.1, the data reported above was corrected for the blank value.			
1553	Chemical Oxygen Demand	19.6	8.0	mg/l
6914	Ammonia-Nitrogen	< 0.20	0.20	mg/l

1 COPY TO ICF Kaiser Engineers, Inc. ATTN: Mr. Doug Taylor
1 COPY TO Data Package Group

Questions? Contact your Client Services Representative
De Brooks at (717) 656-2300
03:35:10 D 0002 13 129101 557988
320 160.00 00185050 ASR000

Respectfully Submitted
Ramona V. Layman
Manager, Metals/Leachates

Analysis Report

Lancaster Laboratories
A division of Thermo Analytical Inc.

LLI Sample No. WW 2682140
Collected: 3/20/97 at 16:00 by CLC

Submitted: 3/22/97 Reported: 4/ 3/97
Discard: 4/11/97

C-SW-5A-2 Grab Water Sample

Morgantown Ordnance - Project No. 66473
SW5A2 SDG#: MOW14-01

Account No: 07867
ICF Kaiser Engineers, Inc.
Gateway View Plaza
1600 W. Carson St.
Pittsburgh PA 15219

P.O. 66473
Rel.

CAT NO.	ANALYSIS NAME	AS RECEIVED RESULTS	LIMIT OF QUANTITATION	UNITS
PAH's in Water				
3280	Naphthalene	610.	10.	ug/l
3281	Acenaphthylene	< 20.	20.	ug/l
3282	Acenaphthene	< 20.	20.	ug/l
3283	Fluorene	< 4.	4.	ug/l
3284	Phenanthrene	< 2.	2.	ug/l
3285	Anthracene	< 1.	1.	ug/l
3286	Fluoranthene	< 0.5	0.5	ug/l
3287	Pyrene	< 2.	2.	ug/l
3288	Benzo(a)anthracene	< 0.1	0.1	ug/l
3289	Chrysene	< 1.	1.	ug/l
3290	Benzo(b)fluoranthene	< 0.2	0.2	ug/l
3291	Benzo(k)fluoranthene	< 0.1	0.1	ug/l
3292	Benzo(a)pyrene	< 0.2	0.2	ug/l
3293	Dibenzo(a,h)anthracene	< 0.2	0.2	ug/l
3294	Benzo(g,h,i)perylene	< 0.5	0.5	ug/l
3295	Indeno(1,2,3-cd)pyrene	< 0.5	0.5	ug/l

Due to interfering peaks on the chromatogram, the value reported for fluorene represents the lowest quantitation limit obtainable.

Questions? Contact your Client Services Representative
De Brooks at (717) 656-2300

Respectfully Submitted
Jenifer E. Hess, B.S.
Group Leader Pesticides/PCBs

Lancaster Laboratories
A division of Thermo Analytical Inc.

LLI Sample No. WW 2682140
Collected: 3/20/97 at 16:00 by CLC

Submitted: 3/22/97 Reported: 4/ 3/97
Discard: 4/11/97

C-SW-5A-2 Grab Water Sample

Morgantown Ordnance - Project No. 66473
SW5A2 SDG#: MOW14-01

Account No: 07867
ICF Kaiser Engineers, Inc.
Gateway View Plaza
1600 W. Carson St.
Pittsburgh PA 15219

P.O. 66473
Rel.

CAT NO.	ANALYSIS NAME	AS RECEIVED RESULTS	LIMIT OF QUANTITATION	UNITS
PCBs in Water				
0639	PCB-1016	< 1.0	1.0	ug/l
0640	PCB-1221	< 1.0	1.0	ug/l
0641	PCB-1232	< 1.0	1.0	ug/l
0642	PCB-1242	< 1.0	1.0	ug/l
0643	PCB-1248	< 1.0	1.0	ug/l
0644	PCB-1254	< 1.0	1.0	ug/l
0645	PCB-1260	< 1.0	1.0	ug/l

Questions? Contact your Client Services Representative
De Brooks at (717) 656-2300

Respectfully Submitted
Jenifer E. Hess, B.S.
Group Leader Pesticides/PCBs

Analysis Report

Lancaster Laboratories
A division of Thermo Analytical Inc.

LLI Sample No. WW 2682140
Collected: 3/20/97 at 16:00 by CLC

Submitted: 3/22/97 Reported: 4/ 3/97
Discard: 4/11/97

C-SW-5A-2 Grab Water Sample

Morgantown Ordnance - Project No. 66473
SW5A2 SDG#: MOW14-01

Account No: 07867
ICF Kaiser Engineers, Inc.
Gateway View Plaza
1600 W. Carson St.
Pittsburgh PA 15219

P.O. 66473
Rel.

CAT NO.	ANALYSIS NAME	AS RECEIVED RESULTS	LIMIT OF QUANTITATION	UNITS
Base Neutrals				
0689	hexachlorobenzene	< 10.	10.	ug/l

Questions? Contact your Client Services Representative
De Brooks at (717) 656-2300

Respectfully Submitted
Christine M. Ratcliff, B.S.
Senior Chemist, GC/MS

Lancaster Laboratories
A division of Thermo Analytical Inc.

LLI Sample No. WW 2682140
Collected: 3/20/97 at 16:00 by CLC

Submitted: 3/22/97 Reported: 4/ 3/97
Discard: 4/11/97

C-SW-5A-2 Grab Water Sample

Morgantown Ordnance - Project No. 66473
SW5A2 SDG#: MOW14-01

Account No: 07867
ICF Kaiser Engineers, Inc.
Gateway View Plaza
1600 W. Carson St.
Pittsburgh PA 15219

P.O. 66473
Rel.

CAT NO.	ANALYSIS NAME	AS RECEIVED RESULTS	LIMIT OF QUANTITATION	UNITS
	Base Neutrals (cont)			

Questions? Contact your Client Services Representative
De Brooks at (717) 656-2300

Respectfully Submitted
Christine M. Ratcliff, B.S.
Senior Chemist, GC/MS

Analysis Report

Lancaster Laboratories
A division of Thermo Analytical Inc.

LLI Sample No. WW 2682151
Collected: 3/20/97 at 10:30 by CLC

Submitted: 3/22/97 Reported: 4/ 3/97
Discard: 4/11/97

RB-10 Grab Water Sample

Morgantown Ordnance - Project No. 66473
RB10- SDG#: MOW14-09

Account No: 07867
ICF Kaiser Engineers, Inc.
Gateway View Plaza
1600 W. Carson St.
Pittsburgh PA 15219

P.O. 66473
Rel.

CAT NO.	ANALYSIS NAME	AS RECEIVED RESULTS	LIMIT OF QUANTITATION	UNITS
7043	Aluminum TR	< 0.20	0.20	mg/l
7053	Copper TR	0.0113	0.0040	mg/l
7054	Iron TR	< 0.10	0.10	mg/l
7055	Lead TR	< 0.0050	0.0050	mg/l
7058	Manganese TR	< 0.0020	0.0020	mg/l
7072	Zinc TR	< 0.020	0.020	mg/l
0259	Mercury	< 0.00020	0.00020	mg/l
1861	PAH's in Water			See Page 2
6030	PCBs in Water		1.	See Page 3
0539	Benzene	< 1.	1.	ug/l
0553	Base Neutrals			See Page 4
0554	Base Neutrals (cont)			See Page 5
0224	Chloride	< 0.20	0.20	mg/l
0237	Total Cyanide (water)	< 0.0050	0.0050	mg/l
0273	Total Organic Carbon	< 1.0	1.0	mg/l
	The Total Organic Carbon (TOC) result reported above was determined by measuring total carbon by a persulfate digestion/infrared detection method on an acidified sample which has been purged of inorganic carbon using nitrogen. It represents "non-purgeable TOC".			
0434	Phenols (water)	< 0.0050	0.0050	mg/l
1504	Fluoride	< 0.10	0.10	mg/l
0200	pH	6.26	0.010	
0206	Total Suspended Solids	< 9.0	9.0	mg/l
0231	Oil & Grease	< 6.0	6.0	mg/l
	The blank analyzed with this sample contained 2.1 mg/l of oil and grease. As directed in EPA method 413.1, the data reported above was corrected for the blank value.			
1553	Chemical Oxygen Demand	< 8.0	8.0	mg/l
6914	Ammonia-Nitrogen	< 0.20	0.20	mg/l

1 COPY TO ICF Kaiser Engineers, Inc. ATTN: Mr. Doug Taylor
1 COPY TO Data Package Group

Questions? Contact your Client Services Representative
De Brooks at (717) 656-2300
03:42:19 D 0002 13 129101 557988
320 120.00 00181050 ASR000

Respectfully Submitted
Ramona V. Layman
Manager, Metals/Leachates

MEMBER ACIL

Lancaster Laboratories
2425 Newport Road
P.O. Box 12425
Lancaster PA 17605-2425
(717) 656-2300 Fax (717) 656-2681

Analysis Report

Lancaster Laboratories
A division of Thermo Analytical Inc.

LLI Sample No. WW 2682151
Collected: 3/20/97 at 10:30 by CLC

Submitted: 3/22/97 Reported: 4/ 3/97
Discard: 4/11/97

RB-10 Grab Water Sample

Morgantown Ordnance - Project No. 66473
RB10- SDG#: MOW14-09

Account No: 07867
ICF Kaiser Engineers, Inc.
Gateway View Plaza
1600 W. Carson St.
Pittsburgh PA 15219

P.O. 66473
Rel.

CAT NO.	ANALYSIS NAME	AS RECEIVED RESULTS	LIMIT OF QUANTITATION	UNITS
PAH's in Water				
3280	Naphthalene	< 10.	10.	ug/l
3281	Acenaphthylene	< 20.	20.	ug/l
3282	Acenaphthene	< 20.	20.	ug/l
3283	Fluorene	< 2.	2.	ug/l
3284	Phenanthrene	< 2.	2.	ug/l
3285	Anthracene	< 1.	1.	ug/l
3286	Fluoranthene	< 0.5	0.5	ug/l
3287	Pyrene	< 2.	2.	ug/l
3288	Benzo(a)anthracene	< 0.1	0.1	ug/l
3289	Chrysene	< 1.	1.	ug/l
3290	Benzo(b)fluoranthene	< 0.2	0.2	ug/l
3291	Benzo(k)fluoranthene	< 0.1	0.1	ug/l
3292	Benzo(a)pyrene	< 0.2	0.2	ug/l
3293	Dibenzo(a,h)anthracene	< 0.2	0.2	ug/l
3294	Benzo(g,h,i)perylene	< 0.5	0.5	ug/l
3295	Indeno(1,2,3-cd)pyrene	< 0.5	0.5	ug/l

Questions? Contact your Client Services Representative
De Brooks at (717) 656-2300

Respectfully Submitted
Jenifer E. Hess, B.S.
Group Leader Pesticides/PCBs

Analysis Report

Lancaster Laboratories
A division of Thermo Analytical Inc.

LLI Sample No. WW 2682151
Collected: 3/20/97 at 10:30 by CLC

Submitted: 3/22/97 Reported: 4/ 3/97
Discard: 4/11/97

RB-10 Grab Water Sample

Morgantown Ordnance - Project No. 66473
RB10- SDG#: MOW14-09

Account No: 07867
ICF Kaiser Engineers, Inc.
Gateway View Plaza
1600 W. Carson St.
Pittsburgh PA 15219

P.O. 66473
Rel.

CAT NO.	ANALYSIS NAME	AS RECEIVED RESULTS	LIMIT OF QUANTITATION	UNITS
PCBs in Water				
0639	PCB-1016	< 1.	1.	ug/l
0640	PCB-1221	< 1.	1.	ug/l
0641	PCB-1232	< 1.	1.	ug/l
0642	PCB-1242	< 1.	1.	ug/l
0643	PCB-1248	< 1.	1.	ug/l
0644	PCB-1254	< 1.	1.	ug/l
0645	PCB-1260	< 1.	1.	ug/l

Questions? Contact your Client Services Representative
De Brooks at (717) 656-2300

Respectfully Submitted
Jenifer E. Hess, B.S.
Group Leader Pesticides/PCBs

Analysis Report

Lancaster Laboratories
A division of Thermo Analytical Inc.

LLI Sample No. WW 2682151
Collected: 3/20/97 at 10:30 by CLC

Submitted: 3/22/97 Reported: 4/ 3/97
Discard: 4/11/97

RB-10 Grab Water Sample

Morgantown Ordnance - Project No. 66473
RB10- SDG#: MOW14-09

Account No: 07867
ICF Kaiser Engineers, Inc.
Gateway View Plaza
1600 W. Carson St.
Pittsburgh PA 15219

P.O. 66473
Rel.

CAT NO.	ANALYSIS NAME	AS RECEIVED RESULTS	LIMIT OF QUANTITATION	UNITS
Base Neutrals				
0689	hexachlorobenzene	< 10.	10.	ug/l

Questions? Contact your Client Services Representative
De Brooks at (717) 656-2300

Respectfully Submitted
Christine M. Ratcliff, B.S.
Senior Chemist, GC/MS

Lancaster Laboratories
2425 New Holland Pike
P.O. Box 12425
Lancaster PA 17605-2425
717-656-2300 Fax 717-656-2681

MEMBER ACIL

See reverse side for explanation of symbols and abbreviations

Analysis Report

Lancaster Laboratories
A division of Thermo Analytical Inc.

ORIGINAL (Red)

LLI Sample No. WW 2682151
Collected: 3/20/97 at 10:30 by CLC

Submitted: 3/22/97 Reported: 4/ 3/97
Discard: 4/11/97

RB-10 Grab Water Sample

Morgantown Ordnance - Project No. 66473
RB10- SDG#: MOW14-09

Account No: 07867
ICF Kaiser Engineers, Inc.
Gateway View Plaza
1600 W. Carson St.
Pittsburgh PA 15219

P.O. 66473
Rel.

CAT NO.	ANALYSIS NAME	AS RECEIVED RESULTS	LIMIT OF QUANTITATION	UNITS
Base Neutrals (cont)				

Questions? Contact your Client Services Representative
De Brooks at (717) 656-2300

Respectfully Submitted
Christine M. Ratcliff, B.S.
Senior Chemist, GC/MS

Analysis Report

Lancaster Laboratories
A division of Thermo Analytical Inc.

LLI Sample No. WW 2682142
Collected: 3/20/97 at 12:30 by CLC

Submitted: 3/22/97 Reported: 4/ 3/97
Discard: 4/11/97

C-SW-6A-2 Grab Water Sample

Morgantown Ordnance - Project No. 66473
SW6A2 SDG#: MOW14-03

Account No: 07867
ICF Kaiser Engineers, Inc.
Gateway View Plaza
1600 W. Carson St.
Pittsburgh PA 15219

P.O. 66473
Rel.

CAT NO.	ANALYSIS NAME	AS RECEIVED RESULTS	LIMIT OF QUANTITATION	UNITS
7043	Aluminum TR	< 0.20	0.20	mg/l
7053	Copper TR	0.161	0.0040	mg/l
7054	Iron TR	1.16	0.10	mg/l
7055	Lead TR	0.109	0.0050	mg/l
7058	Manganese TR	0.160	0.0020	mg/l
7072	Zinc TR	0.300	0.020	mg/l
0259	Mercury	< 0.00020	0.00020	mg/l
1861	PAH's in Water			See Page 2
6030	PCBs in Water		1.	See Page 3
0539	Benzene	< 1.	1.	ug/l
0553	Base Neutrals			See Page 4
0554	Base Neutrals (cont)			See Page 5
0224	Chloride	1.8	1.0	mg/l
0237	Total Cyanide (water)	< 0.0050	0.0050	mg/l
0273	Total Organic Carbon	7.7	1.0	mg/l
	The Total Organic Carbon (TOC) result reported above was determined by measuring total carbon by a persulfate digestion/infrared detection method on an acidified sample which has been purged of inorganic carbon using nitrogen. It represents "non-purgeable TOC".			
0434	Phenols (water)	< 0.0050	0.0050	mg/l
1504	Fluoride	< 0.50	0.50	mg/l
0200	pH	6.94	0.010	
0206	Total Suspended Solids	12.0	9.0	mg/l
0231	Oil & Grease	< 6.0	6.0	mg/l
	The blank analyzed with this sample contained 2.1 mg/l of oil and grease. As directed in EPA method 413.1, the data reported above was corrected for the blank value.			
1553	Chemical Oxygen Demand	26.8	8.0	mg/l
6914	Ammonia-Nitrogen	< 0.20	0.20	mg/l

1 COPY TO ICF Kaiser Engineers, Inc. ATTN: Mr. Doug Taylor
1 COPY TO Data Package Group

Questions? Contact your Client Services Representative
De Brooks at (717) 656-2300
03:36:28 D 0002 13 129101 557988
320 120.00 00181050 ASR000

Respectfully Submitted
Ramona V. Layman
Manager, Metals/Leachates

Lancaster Laboratories
2425 New Holland Pike
P.O. Box 12425
Lancaster, PA 17605-2425
717-656-2300 Fax 717-656-2681

MEMBER ACIL

See reverse side for explanation of symbols and abbreviations

Analysis Report

Lancaster Laboratories
A division of Thermo Analytical Inc.

LLI Sample No. WW 2682142
Collected: 3/20/97 at 12:30 by CLC

Submitted: 3/22/97 Reported: 4/ 3/97
Discard: 4/11/97

C-SW-6A-2 Grab Water Sample

Morgantown Ordnance - Project No. 66473
SW6A2 SDG#: MOW14-03

Account No: 07867
ICF Kaiser Engineers, Inc.
Gateway View Plaza
1600 W. Carson St.
Pittsburgh PA 15219

P.O. 66473
Rel.

CAT NO.	ANALYSIS NAME	AS RECEIVED RESULTS	LIMIT OF QUANTITATION	UNITS
PAH's in Water				
3280	Naphthalene	< 10.	10.	ug/l
3281	Acenaphthylene	< 20.	20.	ug/l
3282	Acenaphthene	< 20.	20.	ug/l
3283	Fluorene	< 2.	2.	ug/l
3284	Phenanthrene	< 2.	2.	ug/l
3285	Anthracene	< 1.	1.	ug/l
3286	Fluoranthene	< 0.5	0.5	ug/l
3287	Pyrene	< 2.	2.	ug/l
3288	Benzo(a)anthracene	< 0.1	0.1	ug/l
3289	Chrysene	< 1.	1.	ug/l
3290	Benzo(b)fluoranthene	< 0.2	0.2	ug/l
3291	Benzo(k)fluoranthene	< 0.1	0.1	ug/l
3292	Benzo(a)pyrene	< 0.2	0.2	ug/l
3293	Dibenzo(a,h)anthracene	< 0.2	0.2	ug/l
3294	Benzo(g,h,i)perylene	< 0.5	0.5	ug/l
3295	Indeno(1,2,3-cd)pyrene	< 0.5	0.5	ug/l

Questions? Contact your Client Services Representative
De Brooks at (717) 656-2300

Respectfully Submitted
Jenifer E. Hess, B.S.
Group Leader Pesticides/PCBs

MEMBER ACIL

Analysis Report

Lancaster Laboratories
A division of Thermo Analytical Inc.

LLI Sample No. WW 2682142
Collected: 3/20/97 at 12:30 by CLC

Submitted: 3/22/97 Reported: 4/ 3/97
Discard: 4/11/97

C-SW-6A-2 Grab Water Sample

Morgantown Ordnance - Project No. 66473
SW6A2 SDG#: MOW14-03

Account No: 07867
ICF Kaiser Engineers, Inc.
Gateway View Plaza
1600 W. Carson St.
Pittsburgh PA 15219

P.O. 66473
Rel.

CAT NO.	ANALYSIS NAME	AS RECEIVED RESULTS	LIMIT OF QUANTITATION	UNITS
PCBs in Water				
0639	PCB-1016	< 1.0	1.0	ug/l
0640	PCB-1221	< 1.0	1.0	ug/l
0641	PCB-1232	< 1.0	1.0	ug/l
0642	PCB-1242	< 1.0	1.0	ug/l
0643	PCB-1248	< 1.0	1.0	ug/l
0644	PCB-1254	< 1.0	1.0	ug/l
0645	PCB-1260	< 1.0	1.0	ug/l

Questions? Contact your Client Services Representative
De Brooks at (717) 656-2300

Respectfully Submitted
Jenifer E. Hess, B.S.
Group Leader Pesticides/PCBs

MEMBER ACIL

Lancaster Laboratories
2425 New Holland Pike
P.O. Box 12425
Lancaster PA 17605-2425
717-656-2300 Fax 717-656-2681

Analysis Report

Lancaster Laboratories
A division of Thermo Analytical Inc.

LLI Sample No. WW 2682142
Collected: 3/20/97 at 12:30 by CLC

Submitted: 3/22/97 Reported: 4/ 3/97
Discard: 4/11/97

C-SW-6A-2 Grab Water Sample

Morgantown Ordnance - Project No. 66473
SW6A2 SDG#: MOW14-03

Account No: 07867
ICF Kaiser Engineers, Inc.
Gateway View Plaza
1600 W. Carson St.
Pittsburgh PA 15219

P.O. 66473
Rel.

CAT NO.	ANALYSIS NAME	AS RECEIVED RESULTS	LIMIT OF QUANTITATION	UNITS
Base Neutrals				
0689	hexachlorobenzene	< 10.	10.	ug/l

Questions? Contact your Client Services Representative
De Brooks at (717) 656-2300

Respectfully Submitted
Christine M. Ratcliff, B.S.
Senior Chemist, GC/MS

Lancaster Laboratories
2425 New Holland Pike
PO Box 12425
Lancaster PA 17605-2425
717-656-2300 Fax 717-656-2681

MEMBER ACIL

See reverse side for explanation of symbols and abbreviations

Analysis Report

Lancaster Laboratories
A division of Thermo Analytical Inc.

LLI Sample No. WW 2682142
Collected: 3/20/97 at 12:30 by CLC

Submitted: 3/22/97 Reported: 4/ 3/97
Discard: 4/11/97

C-SW-6A-2 Grab Water Sample

Morgantown Ordnance - Project No. 66473
SW6A2 SDG#: MOW14-03

Account No: 07867
ICF Kaiser Engineers, Inc.
Gateway View Plaza
1600 W. Carson St.
Pittsburgh PA 15219

P.O. 66473
Rel.

CAT NO.	ANALYSIS NAME	AS RECEIVED RESULTS	LIMIT OF QUANTITATION	UNITS
Base Neutrals (cont)				

Questions? Contact your Client Services Representative
De Brooks at (717) 656-2300

Respectfully Submitted
Christine M. Ratcliff, B.S.
Senior Chemist, GC/MS

MEMBER ACIL
Lancaster Laboratories
2425 New Holland Pike
PO Box 12425
Lancaster, PA 17605-2425
717-656-2300 Fax 717-656-2681

See reverse side for explanation of symbols and abbreviations

Analysis Report

Lancaster Laboratories
A division of Thermo Analytical Inc.

LLI Sample No. WW 2682152
Collected:

Submitted: 3/22/97 Reported: 4/ 3/97
Discard: 4/11/97

Trip Blank Water Sample

Morgantown Ordnance - Project No. 66473
MOWTB SDG#: MOW14-10TB*

Account No: 07867
ICF Kaiser Engineers, Inc.
Gateway View Plaza
1600 W. Carson St.
Pittsburgh PA 15219

P.O. 66473
Rel.

CAT NO.	ANALYSIS NAME	AS RECEIVED RESULTS	LIMIT OF QUANTITATION	UNITS
0539	Benzene	< 1.	1.	ug/l

1 COPY TO ICF Kaiser Engineers, Inc. ATTN: Mr. Doug Taylor
1 COPY TO Data Package Group

Questions? Contact your Client Services Representative
at (717) 656-2300
03:43:14 D 0002 13 129101 557988
320 75.00 00012100 ASR000

Respectfully Submitted
Ramona V. Layman
Manager, Metals/Leachates

MEMBER ACIL
Lancaster Laboratories
2425 New Holland Pike
PO Box 12425
Lancaster PA 17605-2425
717-656-2300 Fax 717-656-2681

See reverse side for explanation of symbols and abbreviations

Analysis Report

Lancaster Laboratories
A division of Thermo Analytical Inc.

LLI Sample No. WW 2682149
Collected: 3/20/97 at 13:30 by CLC

Submitted: 3/22/97 Reported: 4/ 3/97
Discard: 4/11/97

C-SW-7A-2 Grab Water Sample

Morgantown Ordnance - Project No. 66473
CS7A2 SDG#: MOW14-07

Account No: 07867
ICF Kaiser Engineers, Inc.
Gateway View Plaza
1600 W. Carson St.
Pittsburgh PA 15219

P.O. 66473
Rel.

CAT NO.	ANALYSIS NAME	AS RECEIVED RESULTS	LIMIT OF QUANTITATION	UNITS
7043	Aluminum TR	< 0.20	0.20	mg/l
7053	Copper TR	0.0087	0.0040	mg/l
7054	Iron TR	0.14	0.10	mg/l
7055	Lead TR	< 0.0050	0.0050	mg/l
7058	Manganese TR	0.0063	0.0020	mg/l
7072	Zinc TR	0.035	0.020	mg/l
0259	Mercury	< 0.00020	0.00020	mg/l
1861	PAH's in Water			See Page 2
6030	PCBs in Water		1.	See Page 3
0539	Benzene	< 1.	1.	ug/l
0553	Base Neutrals			See Page 4
0554	Base Neutrals (cont)			See Page 5
0224	Chloride	2.5	1.0	mg/l
0237	Total Cyanide (water)	0.0222	0.0050	mg/l
0273	Total Organic Carbon	2.4	1.0	mg/l
	The Total Organic Carbon (TOC) result reported above was determined by measuring total carbon by a persulfate digestion/infrared detection method on an acidified sample which has been purged of inorganic carbon using nitrogen. It represents "non-purgeable TOC".			
0434	Phenols (water)	< 0.0050	0.0050	mg/l
1504	Fluoride	< 0.50	0.50	mg/l
0200	pH	7.41	0.010	
0206	Total Suspended Solids	< 9.0	9.0	mg/l
0231	Oil & Grease	< 6.0	6.0	mg/l
	The blank analyzed with this sample contained 2.1 mg/l of oil and grease. As directed in EPA method 413.1, the data reported above was corrected for the blank value.			
1553	Chemical Oxygen Demand	< 8.0	8.0	mg/l
6914	Ammonia-Nitrogen	< 0.20	0.20	mg/l

1 COPY TO ICF Kaiser Engineers, Inc. ATTN: Mr. Doug Taylor
1 COPY TO Data Package Group

Questions? Contact your Client Services Representative
De Brooks at (717) 656-2300
03:40:51 D 0002 13 129101 557988
320 120.00 00181050 ASR000

Respectfully Submitted
Ramona V. Layman
Manager, Metals/Leachates

MEMBER ACIL

See reverse side for explanation of symbols and abbreviations

Analysis Report

Lancaster Laboratories
A division of Thermo Analytical Inc.

LLI Sample No. WW 2682149
Collected: 3/20/97 at 13:30 by CLC

Submitted: 3/22/97 Reported: 4/ 3/97
Discard: 4/11/97

C-SW-7A-2 Grab Water Sample

Morgantown Ordnance - Project No. 66473
CS7A2 SDG#: MOW14-07

Account No: 07867
ICF Kaiser Engineers, Inc.
Gateway View Plaza
1600 W. Carson St.
Pittsburgh PA 15219

P.O. 66473
Rel.

CAT NO.	ANALYSIS NAME	AS RECEIVED RESULTS	LIMIT OF QUANTITATION	UNITS
PAH's in Water				
3280	Naphthalene	< 10.	10.	ug/l
3281	Acenaphthylene	< 20.	20.	ug/l
3282	Acenaphthene	< 20.	20.	ug/l
3283	Fluorene	< 2.	2.	ug/l
3284	Phenanthrene	< 2.	2.	ug/l
3285	Anthracene	< 1.	1.	ug/l
3286	Fluoranthene	< 0.5	0.5	ug/l
3287	Pyrene	< 2.	2.	ug/l
3288	Benzo(a)anthracene	< 0.1	0.1	ug/l
3289	Chrysene	< 1.	1.	ug/l
3290	Benzo(b)fluoranthene	< 0.2	0.2	ug/l
3291	Benzo(k)fluoranthene	< 0.1	0.1	ug/l
3292	Benzo(a)pyrene	< 0.2	0.2	ug/l
3293	Dibenzo(a,h)anthracene	< 0.2	0.2	ug/l
3294	Benzo(g,h,i)perylene	< 0.5	0.5	ug/l
3295	Indeno(1,2,3-cd)pyrene	< 0.5	0.5	ug/l

Questions? Contact your Client Services Representative
De Brooks at (717) 656-2300

Respectfully Submitted
Jenifer E. Hess, B.S.
Group Leader Pesticides/PCBs

Lancaster Laboratories
A division of Thermo Analytical Inc.

LLI Sample No. WW 2682149
Collected: 3/20/97 at 13:30 by CLC

Submitted: 3/22/97 Reported: 4/ 3/97
Discard: 4/11/97

C-SW-7A-2 Grab Water Sample

Morgantown Ordnance - Project No. 66473
CS7A2 SDG#: MOW14-07

Account No: 07867
ICF Kaiser Engineers, Inc.
Gateway View Plaza
1600 W. Carson St.
Pittsburgh PA 15219

P.O. 66473
Rel.

CAT NO.	ANALYSIS NAME	AS RECEIVED RESULTS	LIMIT OF QUANTITATION	UNITS
PCBs in Water				
0639	PCB-1016	< 1.	1.	ug/l
0640	PCB-1221	< 1.	1.	ug/l
0641	PCB-1232	< 1.	1.	ug/l
0642	PCB-1242	< 1.	1.	ug/l
0643	PCB-1248	< 1.	1.	ug/l
0644	PCB-1254	< 1.	1.	ug/l
0645	PCB-1260	< 1.	1.	ug/l

Questions? Contact your Client Services Representative
De Brooks at (717) 656-2300

Respectfully Submitted
Jenifer E. Hess, B.S.
Group Leader Pesticides/PCBs

Analysis Report

Lancaster Laboratories
A division of Thermo Analytical Inc.

LLI Sample No. WW 2682149
Collected: 3/20/97 at 13:30 by CLC

Submitted: 3/22/97 Reported: 4/ 3/97
Discard: 4/11/97

C-SW-7A-2 Grab Water Sample

Morgantown Ordnance - Project No. 66473
CS7A2 SDG#: MOW14-07

Account No: 07867
ICF Kaiser Engineers, Inc.
Gateway View Plaza
1600 W. Carson St.
Pittsburgh PA 15219

P.O. 66473
Rel.

CAT NO.	ANALYSIS NAME	AS RECEIVED RESULTS	LIMIT OF QUANTITATION	UNITS
Base Neutrals				
0689	hexachlorobenzene	< 11.	11.	ug/l
	Due to insufficient sample, the quantitation limits for the GC/MS semivolatile compounds were raised.			

Questions? Contact your Client Services Representative
De Brooks at (717) 656-2300

Respectfully Submitted
Christine M. Ratcliff, B.S.
Senior Chemist, GC/MS

MEMBER ACIL
Lancaster Laboratories
2425 New Holland Pike
PO Box 12425
Lancaster, PA 17605-2425
717-656-2300 Fax 717-656-2681

See reverse side for explanation of symbols and abbreviations

Lancaster Laboratories
A division of Thermo Analytical Inc.

LLI Sample No. WW 2682149
Collected: 3/20/97 at 13:30 by CLC

Submitted: 3/22/97 Reported: 4/ 3/97
Discard: 4/11/97

C-SW-7A-2 Grab Water Sample

Morgantown Ordnance - Project No. 66473
CS7A2 SDG#: MOW14-07

Account No: 07867
ICF Kaiser Engineers, Inc.
Gateway View Plaza
1600 W. Carson St.
Pittsburgh PA 15219

P.O. 66473
Rel.

CAT NO.	ANALYSIS NAME	AS RECEIVED RESULTS	LIMIT OF QUANTITATION	UNITS
Base Neutrals (cont)				

Questions? Contact your Client Services Representative
De Brooks at (717) 656-2300

Respectfully Submitted
Christine M. Ratcliff, B.S.
Senior Chemist, GC/MS

Lancaster Laboratories
2425 New Holland Pike
P.O. Box 12425
Lancaster PA 17605-2425
(717)656-2300 Fax (717)656-2681

MEMBER ACIL

See reverse side for explanation of symbols and abbreviations

Analysis Report

Lancaster Laboratories
A division of Thermo Analytical Inc.

LLI Sample No. WW 2682141
Collected: 3/20/97 at 16:35 by CLC

Submitted: 3/22/97 Reported: 4/ 3/97
Discard: 4/11/97

C-SW-8A-2 Grab Water Sample

Morgantown Ordnance - Project No. 66473
SW8A2 SDG#: MOW14-02

Account No: 07867
ICF Kaiser Engineers, Inc.
Gateway View Plaza
1600 W. Carson St.
Pittsburgh PA 15219

P.O. 66473
Rel.

CAT NO.	ANALYSIS NAME	AS RECEIVED RESULTS	LIMIT OF QUANTITATION	UNITS
7043	Aluminum TR	< 0.20	0.20	mg/l
7053	Copper TR	0.0096	0.0040	mg/l
7054	Iron TR	0.43	0.10	mg/l
7055	Lead TR	< 0.0050	0.0050	mg/l
7058	Manganese TR	0.0171	0.0020	mg/l
7072	Zinc TR	0.026	0.020	mg/l
0259	Mercury	< 0.00020	0.00020	mg/l
1861	PAH's in Water			See Page 2
6030	PCBs in Water		1.	See Page 3
0539	Benzene	< 1.	1.	ug/l
0553	Base Neutrals			See Page 4
0554	Base Neutrals (cont)			See Page 5
0224	Chloride	2.4	1.0	mg/l
0237	Total Cyanide (water)	0.0122	0.0050	mg/l
0273	Total Organic Carbon	5.9	1.0	mg/l
	The Total Organic Carbon (TOC) result reported above was determined by measuring total carbon by a persulfate digestion/infrared detection method on an acidified sample which has been purged of inorganic carbon using nitrogen. It represents "non-purgeable TOC".			
0434	Phenols (water)	< 0.0050	0.0050	mg/l
1504	Fluoride	< 0.50	0.50	mg/l
0200	pH	7.06	0.010	
0206	Total Suspended Solids	< 9.0	9.0	mg/l
0231	Oil & Grease	< 6.0	6.0	mg/l
	The blank analyzed with this sample contained 2.1 mg/l of oil and grease. As directed in EPA method 413.1, the data reported above was corrected for the blank value.			
1553	Chemical Oxygen Demand	18.4	8.0	mg/l
6914	Ammonia-Nitrogen	< 0.20	0.20	mg/l

1 COPY TO ICF Kaiser Engineers, Inc. ATTN: Mr. Doug Taylor
1 COPY TO Data Package Group

Questions? Contact your Client Services Representative
De Brooks at (717) 656-2300
03:35:43 D 0002 13 129101 557988
320 120.00 00181050 ASR000

Respectfully Submitted
Ramona V. Layman
Manager, Metals/Leachates

MEMBER ACIL
Lancaster Laboratories
2425 Newport Pike
PO Box 12425
Lancaster PA 17605-2425
717-656-2300 Fax 717-656-2681

See reverse side for explanation of symbols and abbreviations

Lancaster Laboratories
A division of Thermo Analytical Inc.

LLI Sample No. WW 2682141
Collected: 3/20/97 at 16:35 by CLC

Submitted: 3/22/97 Reported: 4/ 3/97
Discard: 4/11/97

C-SW-8A-2 Grab Water Sample

Morgantown Ordnance - Project No. 66473
SW8A2 SDG#: MOW14-02

Account No: 07867
ICF Kaiser Engineers, Inc.
Gateway View Plaza
1600 W. Carson St.
Pittsburgh PA 15219

P.O. 66473
Rel.

CAT NO.	ANALYSIS NAME	AS RECEIVED RESULTS	LIMIT OF QUANTITATION	UNITS
PAH's in Water				
3280	Naphthalene	< 10.	10.	ug/l
3281	Acenaphthylene	< 20.	20.	ug/l
3282	Acenaphthene	< 20.	20.	ug/l
3283	Fluorene	< 2.	2.	ug/l
3284	Phenanthrene	< 2.	2.	ug/l
3285	Anthracene	< 1.	1.	ug/l
3286	Fluoranthene	< 0.5	0.5	ug/l
3287	Pyrene	< 2.	2.	ug/l
3288	Benzo(a)anthracene	< 0.1	0.1	ug/l
3289	Chrysene	< 1.	1.	ug/l
3290	Benzo(b)fluoranthene	< 0.2	0.2	ug/l
3291	Benzo(k)fluoranthene	< 0.1	0.1	ug/l
3292	Benzo(a)pyrene	< 0.2	0.2	ug/l
3293	Dibenzo(a,h)anthracene	< 0.2	0.2	ug/l
3294	Benzo(g,h,i)perylene	< 0.5	0.5	ug/l
3295	Indeno(1,2,3-cd)pyrene	< 0.5	0.5	ug/l

Questions? Contact your Client Services Representative
De Brooks at (717) 656-2300

Respectfully Submitted
Jenifer E. Hess, B.S.
Group Leader Pesticides/PCBs

Analysis Report

Lancaster Laboratories
A division of Thermo Analytical Inc.

LLI Sample No. WW 2682141
Collected: 3/20/97 at 16:35 by CLC

Submitted: 3/22/97 Reported: 4/ 3/97
Discard: 4/11/97

C-SW-8A-2 Grab Water Sample

Morgantown Ordnance - Project No. 66473
SW8A2 SDG#: MOW14-02

Account No: 07867
ICF Kaiser Engineers, Inc.
Gateway View Plaza
1600 W. Carson St.
Pittsburgh PA 15219

P.O. 66473
Rel.

CAT NO.	ANALYSIS NAME	AS RECEIVED RESULTS	LIMIT OF QUANTITATION	UNITS
PCBs in Water				
0639	PCB-1016	< 1.0	1.0	ug/l
0640	PCB-1221	< 1.0	1.0	ug/l
0641	PCB-1232	< 1.0	1.0	ug/l
0642	PCB-1242	< 1.0	1.0	ug/l
0643	PCB-1248	< 1.0	1.0	ug/l
0644	PCB-1254	< 1.0	1.0	ug/l
0645	PCB-1260	< 1.0	1.0	ug/l

Questions? Contact your Client Services Representative
De Brooks at (717) 656-2300

Respectfully Submitted
Jenifer E. Hess, B.S.
Group Leader Pesticides/PCBs

Lancaster Laboratories
A division of Thermo Analytical Inc.

LLI Sample No. WW 2682141
Collected: 3/20/97 at 16:35 by CLC

Submitted: 3/22/97 Reported: 4/ 3/97
Discard: 4/11/97

C-SW-8A-2 Grab Water Sample

Morgantown Ordnance - Project No. 66473
SW8A2 SDG#: MOW14-02

Account No: 07867
ICF Kaiser Engineers, Inc.
Gateway View Plaza
1600 W. Carson St.
Pittsburgh PA 15219

P.O. 66473
Rel.

CAT NO.	ANALYSIS NAME	AS RECEIVED RESULTS	LIMIT OF QUANTITATION	UNITS
Base Neutrals				
0689	hexachlorobenzene	< 10.	10.	ug/l

Questions? Contact your Client Services Representative
De Brooks at (717) 656-2300

Respectfully Submitted
Christine M. Ratcliff, B.S.
Senior Chemist, GC/MS

MEMBER ACIL
Lancaster Laboratories
2425 New Holland Pike
PO Box 12425
Lancaster, PA 17605-2425
717-656-2300 Fax 717-656-2681

See reverse side for explanation of symbols and abbreviations.

Analysis Report

Lancaster Laboratories
A division of Thermo Analytical Inc.

LLI Sample No. WW 2682141
Collected: 3/20/97 at 16:35 by CLC

Submitted: 3/22/97 Reported: 4/ 3/97
Discard: 4/11/97

C-SW-8A-2 Grab Water Sample

Morgantown Ordnance - Project No. 66473
SW8A2 SDG#: MOW14-02

Account No: 07867
ICF Kaiser Engineers, Inc.
Gateway View Plaza
1600 W. Carson St.
Pittsburgh PA 15219

P.O. 66473
Rel.

CAT NO.	ANALYSIS NAME	AS RECEIVED RESULTS	LIMIT OF QUANTITATION	UNITS
Base Neutrals (cont)				

Questions? Contact your Client Services Representative
De Brooks at (717) 656-2300

Respectfully Submitted
Christine M. Ratcliff, B.S.
Senior Chemist, GC/MS

MEMBER ACIL
Lancaster Laboratories
2425 New Holland Pike
P.O. Box 12425
Lancaster, PA 17605-2425
717-656-2300 Fax 717-656-2681

See reverse side for explanation of symbols and abbreviations

Analysis Report

Lancaster Laboratories
A division of Thermo Analytical Inc.

LLI Sample No. WW 2695816
Collected: 4/16/97 at 17:30 by CC

Submitted: 4/18/97 Reported: 4/22/97
Discard: 4/30/97

MOW-041797-M1 Grab Water Sample

Morgantown Ordnance - Project No. 66473

Account No: 07867
ICF Kaiser Engineers, Inc.
Gateway View Plaza
1600 W. Carson St.
Pittsburgh PA 15219

P.O. 66473
Rel.

CAT NO.	ANALYSIS NAME	AS RECEIVED RESULTS	LIMIT OF QUANTITATION	UNITS
7043	Aluminum TR	< 0.20	0.20	mg/l
7053	Copper TR	0.0158	0.0040	mg/l
7054	Iron TR	0.72	0.10	mg/l
7055	Lead TR	< 0.0050	0.0050	mg/l
7058	Manganese TR	0.311	0.0020	mg/l
7072	Zinc TR	0.131	0.020	mg/l
0259	Mercury	0.00026	0.00020	mg/l
1861	PAH's in Water			See Page 2
6030	PCBs in Water			See Page 3
0539	Benzene	< 1.	1.	ug/l
0553	Base Neutrals			See Page 4
0554	Base Neutrals (cont)			See Page 5
0224	Chloride	16.2	1.0	mg/l
0237	Total Cyanide (water)	0.0078	0.0050	mg/l
0273	Total Organic Carbon	2.4	1.0	mg/l
	The Total Organic Carbon (TOC) result reported above was determined by measuring total carbon by a persulfate digestion/infrared detection method on an acidified sample which has been purged of inorganic carbon using nitrogen. It represents "non-purgeable TOC".			
0434	Phenols (water)	< 0.0050	0.0050	mg/l
1504	Fluoride	< 0.50	0.50	mg/l
0200	pH	7.34	0.010	
0206	Total Suspended Solids	< 9.0	9.0	mg/l
0231	Oil & Grease	< 6.0	6.0	mg/l
	The blank analyzed with this sample contained 1.2 mg/l of oil and grease. As directed in EPA method 413.1, the data reported above was corrected for the blank value.			
1553	Chemical Oxygen Demand	12.6	8.0	mg/l
6914	Ammonia-Nitrogen	< 0.20	0.20	mg/l

1 COPY TO ICF Kaiser Engineers, Inc. ATTN: Mr. Doug Taylor

Questions? Contact your Client Services Representative
De Brooks at (717) 656-2300
13:31:48 D 0001 6 130462 561429
542 0.00 00129701 ASR000

Respectfully Submitted
Ramona V. Layman
Manager, Metals/Leachates

Lancaster Laboratories
2425 New Holland Pike
P.O. Box 12425
Lancaster, PA 17605-2425
Phone: (717) 656-2300 Fax: (717) 656-2681

MEMBER ACIL

See reverse side for explanation of symbols and abbreviations

Lancaster Laboratories
A division of Thermo Analytical Inc.

LLI Sample No. WW 2695816
Collected: 4/16/97 at 17:30 by CC

Submitted: 4/18/97 Reported: 4/22/97
Discard: 4/30/97

MOW-041797-M1 Grab Water Sample

Morgantown Ordnance - Project No. 66473

Account No: 07867
ICF Kaiser Engineers, Inc.
Gateway View Plaza
1600 W. Carson St.
Pittsburgh PA 15219

P.O. 66473
Rel.

CAT NO.	ANALYSIS NAME	AS RECEIVED RESULTS	LIMIT OF QUANTITATION	UNITS
PAH's in Water				
3280	Naphthalene	< 10.	10.	ug/l
3281	Acenaphthylene	< 20.	20.	ug/l
3282	Acenaphthene	< 20.	20.	ug/l
3283	Fluorene	< 2.	2.	ug/l
3284	Phenanthrene	< 2.	2.	ug/l
3285	Anthracene	< 1.	1.	ug/l
3286	Fluoranthene	< 0.5	0.5	ug/l
3287	Pyrene	< 2.	2.	ug/l
3288	Benzo(a)anthracene	< 0.1	0.1	ug/l
3289	Chrysene	< 1.	1.	ug/l
3290	Benzo(b)fluoranthene	< 0.2	0.2	ug/l
3291	Benzo(k)fluoranthene	< 0.1	0.1	ug/l
3292	Benzo(a)pyrene	< 0.2	0.2	ug/l
3293	Dibenzo(a,h)anthracene	< 0.2	0.2	ug/l
3294	Benzo(g,h,i)perylene	< 0.5	0.5	ug/l
3295	Indeno(1,2,3-cd)pyrene	< 0.5	0.5	ug/l

Questions? Contact your Client Services Representative
De Brooks at (717) 656-2300

Respectfully Submitted
Jenifer E. Hess, B.S.
Group Leader Pesticides/PCBs

Lancaster Laboratories
A division of Thermo Analytical Inc.

LLI Sample No. WW 2695816
Collected: 4/16/97 at 17:30 by CC

Submitted: 4/18/97 Reported: 4/22/97
Discard: 4/30/97

MOW-041797-M1 Grab Water Sample

Morgantown Ordnance - Project No. 66473

Account No: 07867
ICF Kaiser Engineers, Inc.
Gateway View Plaza
1600 W. Carson St.
Pittsburgh PA 15219

P.O. 66473
Rel.

CAT NO.	ANALYSIS NAME	AS RECEIVED RESULTS	LIMIT OF QUANTITATION	UNITS
PCBs in Water				
0639	PCB-1016	< 1.0	1.0	ug/l
0640	PCB-1221	< 1.0	1.0	ug/l
0641	PCB-1232	< 1.0	1.0	ug/l
0642	PCB-1242	< 1.0	1.0	ug/l
0643	PCB-1248	< 1.0	1.0	ug/l
0644	PCB-1254	< 1.0	1.0	ug/l
0645	PCB-1260	< 1.0	1.0	ug/l

Questions? Contact your Client Services Representative
De Brooks at (717) 656-2300

Respectfully Submitted
Jenifer E. Hess, B.S.
Group Leader Pesticides/PCBs

MEMBER ACIL

Lancaster Laboratories
A division of Thermo Analytical Inc.

LLI Sample No. WW 2695816
Collected: 4/16/97 at 17:30 by CC

Submitted: 4/18/97 Reported: 4/22/97
Discard: 4/30/97

MOW-041797-M1 Grab Water Sample

Morgantown Ordnance - Project No. 66473

Account No: 07867
ICF Kaiser Engineers, Inc.
Gateway View Plaza
1600 W. Carson St.
Pittsburgh PA 15219

P.O. 66473
Rel.

CAT NO.	ANALYSIS NAME	AS RECEIVED RESULTS	LIMIT OF QUANTITATION	UNITS
Base Neutrals				
0689	hexachlorobenzene	< 11.	11.	ug/l

Questions? Contact your Client Services Representative
De Brooks at (717) 656-2300

Respectfully Submitted
Christine M. Ratcliff, B.S.
Senior Chemist, GC/MS

MEMBER ACIL

Lancaster Laboratories
A division of Thermo Analytical Inc.

LLI Sample No. WW 2695816
Collected: 4/16/97 at 17:30 by CC

Submitted: 4/18/97 Reported: 4/22/97
Discard: 4/30/97

MOW-041797-M1 Grab Water Sample

Morgantown Ordnance - Project No. 66473

Account No: 07867
ICF Kaiser Engineers, Inc.
Gateway View Plaza
1600 W. Carson St.
Pittsburgh PA 15219

P.O. 66473
Rel.

CAT NO.	ANALYSIS NAME	AS RECEIVED RESULTS	LIMIT OF QUANTITATION	UNITS
Base Neutrals (cont)				

Due to insufficient sample, the quantitation limits for the GC/MS semivolatile compounds were raised.

Questions? Contact your Client Services Representative
De Brooks at (717) 656-2300

Respectfully Submitted
Christine M. Ratcliff, B.S.
Senior Chemist, GC/MS

MEMBER ACIL

Analysis Report

Lancaster Laboratories
A division of Thermo Analytical Inc.

LLI Sample No. SW 2694501
Collected: 4/15/97 at 13:35 by CC

Submitted: 4/16/97 Reported: 4/17/97
Discard: 5/ 2/97

MOW-1-226 Composite Soil Sample

Morgantown Ordnance Works Project No. 66473

Account No: 07867
ICF Kaiser Engineers, Inc.
Gateway View Plaza
1600 W. Carson St.
Pittsburgh PA 15219

P.O. 66473
Rel.

CAT NO.	ANALYSIS NAME	AS RECEIVED RESULTS	AS RECEIVED LIMIT OF QUANTITATION	AS RECEIVED UNITS	DRY WEIGHT RESULTS	DRY WEIGHT LIMIT OF QUANTITATION
0155	Lead	1,130.	100.	mg/kg	1,270.	110.
0111	Moisture	10.6	0.50	% by wt.		

"Moisture" represents the loss in weight of the sample after oven drying at 103 - 105 degrees Celsius.

1 COPY TO ICF Kaiser Engineers, Inc. ATTN: Mr. Doug Taylor

Questions? Contact your Client Services Representative
De Brooks at (717) 656-2300
16:35:22 D 0001 31 130462 561074
320 0.00 00009510 ASR000

Respectfully Submitted
Ramona V. Layman
Manager, Metals/Leachates

Lancaster Laboratories
2425 New Holland Pike
PO Box 12425
Lancaster PA 17605-2425
717-656-2300 Fax 717-656-2681

MEMBER ACIL

See reverse side for explanation of symbols and abbreviations

Analysis Report

Lancaster Laboratories
A division of Thermo Analytical Inc.

LLI Sample No. SW 2694502
Collected: 4/15/97 at 13:40 by CC

Submitted: 4/16/97 Reported: 4/17/97
Discard: 5/ 2/97

MOW-1-227 Composite Soil Sample

Morgantown Ordnance Works Project No. 66473

Account No: 07867
ICF Kaiser Engineers, Inc.
Gateway View Plaza
1600 W. Carson St.
Pittsburgh PA 15219

P.O. 66473
Rel.

CAT NO.	ANALYSIS NAME	AS RECEIVED RESULTS	AS RECEIVED LIMIT OF QUANTITATION	UNITS	DRY WEIGHT RESULTS	DRY WEIGHT LIMIT OF QUANTITATION
0155	Lead	613.	50.	mg/kg	702.	57.
0111	Moisture	12.6	0.50	% by wt.		

"Moisture" represents the loss in weight of the sample after oven drying at 103 - 105 degrees Celsius.

1 COPY TO ICF Kaiser Engineers, Inc. ATTN: Mr. Doug Taylor

Questions? Contact your Client Services Representative
De Brooks at (717) 656-2300
16:35:36 D 0001 31 130462 561074
320 0.00 00005330 ASR000

Respectfully Submitted
Ramona V. Layman
Manager, Metals/Leachates

MEMBER ACIL
Lancaster Laboratories
2425 New Holland Pike
PO Box 12425
Lancaster, PA 17605-2425
717-656-2300 Fax 717-656-2681

See reverse side for explanation of symbols and abbreviations

Analysis Report

Lancaster Laboratories
A division of Thermo Analytical Inc.

LLI Sample No. SW 2694503
Collected: 4/15/97 at 13:45 by CC

Submitted: 4/16/97 Reported: 4/17/97
Discard: 5/ 2/97

MOW-1B-228 Composite Soil Sample

Morgantown Ordnance Works Project No. 66473

Account No: 07867
ICF Kaiser Engineers, Inc.
Gateway View Plaza
1600 W. Carson St.
Pittsburgh PA 15219

P.O. 66473
Rel.

CAT NO.	ANALYSIS NAME	AS RECEIVED RESULTS	AS RECEIVED LIMIT OF QUANTITATION	AS RECEIVED UNITS	DRY WEIGHT RESULTS	DRY WEIGHT LIMIT OF QUANTITATION
0155	Lead	58.	10.	mg/kg	69.	12.
0111	Moisture	15.9	0.50	% by wt.		

"Moisture" represents the loss in weight of the sample after oven drying at 103 - 105 degrees Celsius.

1 COPY TO ICF Kaiser Engineers, Inc. ATTN: Mr. Doug Taylor

Questions? Contact your Client Services Representative
De Brooks at (717) 656-2300
16:35:44 D 0001 31 130462 561074
320 0.00 00005330 ASR000

Respectfully Submitted
Ramona V. Layman
Manager, Metals/Leachates

MEMBER ACIL
Lancaster Laboratories
2425 New Holland Pike
PO Box 12425
Lancaster, PA 17605-2425
717-656-2300 Fax 717-656-2681

See reverse side for explanation of symbols and abbreviations

Analysis Report

Lancaster Laboratories
A division of Thermo Analytical Inc.

LLI Sample No. SW 2694504
Collected: 4/15/97 at 13:46 by CC

Submitted: 4/16/97 Reported: 4/17/97
Discard: 5/ 2/97

MOW-1B-228D Composite Soil Sample

Morgantown Ordnance Works Project No. 66473

Account No: 07867
ICF Kaiser Engineers, Inc.
Gateway View Plaza
1600 W. Carson St.
Pittsburgh PA 15219

P.O. 66473
Rel.

CAT NO.	ANALYSIS NAME	AS RECEIVED RESULTS	AS RECEIVED LIMIT OF QUANTITATION	AS RECEIVED UNITS	DRY WEIGHT RESULTS	DRY WEIGHT LIMIT OF QUANTITATION
0155	Lead	11.8	9.9	mg/kg	14.	11.
0111	Moisture	13.5	0.50	% by wt.		

"Moisture" represents the loss in weight of the sample after oven drying at 103 - 105 degrees Celsius.

1 COPY TO ICF Kaiser Engineers, Inc. ATTN: Mr. Doug Taylor

Questions? Contact your Client Services Representative
De Brooks at (717) 656-2300
16:35:53 D 0001 31 130462 561074
320 0.00 00005330 ASR000

Respectfully Submitted
Ramona V. Layman
Manager, Metals/Leachates

MEMBER ACIL
Lancaster Laboratories
2425 New Holland Pike
PO Box 12425
Lancaster PA 17605-2425
717-656-2300 Fax 717-656-2681

See reverse side for explanation of symbols and abbreviations

Analysis Report

Lancaster Laboratories
A division of Thermo Analytical Inc.

LLI Sample No. SW 2694505
Collected: 4/15/97 at 14:20 by CC

Submitted: 4/16/97 Reported: 4/17/97
Discard: 5/ 2/97

MOW-4-229 Composite Soil Sample

Morgantown Ordnance Works Project No. 66473

Account No: 07867
ICF Kaiser Engineers, Inc.
Gateway View Plaza
1600 W. Carson St.
Pittsburgh PA 15219

P.O. 66473
Rel.

CAT NO.	ANALYSIS NAME	AS RECEIVED RESULTS	AS RECEIVED LIMIT OF QUANTITATION	UNITS	DRY WEIGHT RESULTS	DRY WEIGHT LIMIT OF QUANTITATION
0155	Lead	694.	49.	mg/kg	870.	62.
0111	Moisture	20.3	0.50	% by wt.		

"Moisture" represents the loss in weight of the sample after oven drying at 103 - 105 degrees Celsius.

1 COPY TO ICF Kaiser Engineers, Inc. ATTN: Mr. Doug Taylor

Questions? Contact your Client Services Representative
De Brooks at (717) 656-2300
16:36:03 D 0001 31 130462 561074
320 0.00 00005330 ASR000

Respectfully Submitted
Ramona V. Layman
Manager, Metals/Leachates

Lancaster Laboratories
2425 New Holland Pike
PO Box 12425
Lancaster, PA 17605-2425
717-656-2300 Fax 717-656-2681

MEMBER ACIL

See reverse side for explanation of symbols and abbreviations

Analysis Report

Lancaster Laboratories
A division of Thermo Analytical Inc.

LLI Sample No. SW 2694506
Collected: 4/15/97 at 14:25 by CC

Submitted: 4/16/97 Reported: 4/17/97
Discard: 5/ 2/97

MOW-4-230 Composite Soil Sample

Morgantown Ordnance Works Project No. 66473

Account No: 07867
ICF Kaiser Engineers, Inc.
Gateway View Plaza
1600 W. Carson St.
Pittsburgh PA 15219

P.O. 66473
Rel.

CAT NO.	ANALYSIS NAME	AS RECEIVED RESULTS	AS RECEIVED LIMIT OF QUANTITATION	AS RECEIVED UNITS	DRY WEIGHT RESULTS	DRY WEIGHT LIMIT OF QUANTITATION
0155	Lead	144.	9.7	mg/kg	173.	12.
0111	Moisture	16.8	0.50	% by wt.		

"Moisture" represents the loss in weight of the sample after oven drying at 103 - 105 degrees Celsius.

1 COPY TO ICF Kaiser Engineers, Inc. ATTN: Mr. Doug Taylor

Questions? Contact your Client Services Representative
De Brooks at (717) 656-2300
16:36:17 D 0001 31 130462 561074
320 0.00 00005330 ASR000

Respectfully Submitted
Ramona V. Layman
Manager, Metals/Leachates

Lancaster Laboratories
2425 New Holland Pike
PO Box 12425
Lancaster, PA 17605-2425
717-656-2300 Fax 717-656-2681

MEMBER ACIL

See reverse side for explanation of symbols and abbreviations

Analysis Report

Lancaster Laboratories
A division of Thermo Analytical Inc.

LLI Sample No. SW 2694507
Collected: 4/15/97 at 14:35 by CC

Submitted: 4/16/97 Reported: 4/17/97
Discard: 5/ 2/97

MOW-4-231 Composite Soil Sample

Morgantown Ordnance Works Project No. 66473

Account No: 07867
ICF Kaiser Engineers, Inc.
Gateway View Plaza
1600 W. Carson St.
Pittsburgh PA 15219

P.O. 66473
Rel.

CAT NO.	ANALYSIS NAME	AS RECEIVED RESULTS	AS RECEIVED LIMIT OF QUANTITATION	AS RECEIVED UNITS	DRY WEIGHT RESULTS	DRY WEIGHT LIMIT OF QUANTITATION
0155	Lead	347.	9.9	mg/kg	389.	11.
0111	Moisture	10.9	0.50	% by wt.		

"Moisture" represents the loss in weight of the sample after oven drying at 103 - 105 degrees Celsius.

1 COPY TO ICF Kaiser Engineers, Inc. ATTN: Mr. Doug Taylor

Questions? Contact your Client Services Representative
De Brooks at (717) 656-2300
16:36:27 D 0001 31 130462 561074
320 0.00 00005330 ASR000

Respectfully Submitted
Ramona V. Layman
Manager, Metals/Leachates

Lancaster Laboratories
2425 Lancaster Pike
PO Box 12425
Lancaster PA 17605-2425
717-656-2300 Fax 717-656-2681

MEMBER ACIL

See reverse side for explanation of symbols and abbreviations

Analysis Report

Lancaster Laboratories
A division of Thermo Analytical Inc.

LLI Sample No. SW 2694508
Collected: 4/15/97 at 14:45 by CC

Submitted: 4/16/97 Reported: 4/17/97
Discard: 5/ 2/97

MOW-4-232 Composite Soil Sample

Morgantown Ordnance Works Project No. 66473

Account No: 07867
ICF Kaiser Engineers, Inc.
Gateway View Plaza
1600 W. Carson St.
Pittsburgh PA 15219

P.O. 66473
Rel.

CAT NO.	ANALYSIS NAME	AS RECEIVED RESULTS	AS RECEIVED LIMIT OF QUANTITATION	UNITS	DRY WEIGHT RESULTS	DRY WEIGHT LIMIT OF QUANTITATION
0155	Lead	1,620.	98.	mg/kg	1,860.	110.
0111	Moisture	13.1	0.50	% by wt.		

"Moisture" represents the loss in weight of the sample after oven drying at 103 - 105 degrees Celsius.

1 COPY TO ICF Kaiser Engineers, Inc. ATTN: Mr. Doug Taylor

Questions? Contact your Client Services Representative
De Brooks at (717) 656-2300
16:36:36 D 0001 31 130462 561074
320 0.00 00005330 ASR000

Respectfully Submitted
Ramona V. Layman
Manager, Metals/Leachates

Lancaster Laboratories
2425 New Holland Pike
P.O. Box 12425
Lancaster PA 17605-2425
(717) 656-2300 Fax (717) 656-2681

MEMBER ACIL

See reverse side for explanation of symbols and abbreviations

Analysis Report

Lancaster Laboratories
A division of Thermo Analytical Inc.

LLI Sample No. SW 2694509
Collected: 4/15/97 at 14:50 by CC

Submitted: 4/16/97 Reported: 4/17/97
Discard: 5/ 2/97

MOW-4B-233 Unspiked Composite Soil Sample

Morgantown Ordnance Works Project No. 66473
233-- SDG#: XXX01-BKG

Account No: 07867
ICF Kaiser Engineers, Inc.
Gateway View Plaza
1600 W. Carson St.
Pittsburgh PA 15219

P.O. 66473
Rel.

CAT NO.	ANALYSIS NAME	AS RECEIVED RESULTS	AS RECEIVED LIMIT OF QUANTITATION	UNITS	DRY WEIGHT RESULTS	DRY WEIGHT LIMIT OF QUANTITATION
0155	Lead	36.0	9.9	mg/kg	41.	11.
0111	Moisture	11.9	0.50	% by wt.		

"Moisture" represents the loss in weight of the sample after oven drying at 103 - 105 degrees Celsius.

1 COPY TO ICF Kaiser Engineers, Inc. ATTN: Mr. Doug Taylor

Questions? Contact your Client Services Representative
De Brooks at (717) 656-2300
16:36:47 D 0001 31 130462 561074
320 0.00 00005330 ASR000

Respectfully Submitted
Ramona V. Layman
Manager, Metals/Leachates

Lancaster Laboratories
2425 New Holland Pike
PO Box 12425
Lancaster, PA 17605-2425
717-656-2300 Fax 717-656-2681

MEMBER ACIL

See reverse side for explanation of symbols and abbreviations

Analysis Report

Lancaster Laboratories
A division of Thermo Analytical Inc.

LLI Sample No. SW 2694510
Collected: 4/15/97 at 14:50 by CC

Submitted: 4/16/97 Reported: 4/17/97
Discard: 5/ 2/97

MOW-48-233 Matrix Spike Composite Soil Sample

Morgantown Ordnance Works Project No. 66473
233-- SDG#: XXX01-MS

Account No: 07867
ICF Kaiser Engineers, Inc.
Gateway View Plaza
1600 W. Carson St.
Pittsburgh PA 15219

P.O. 66473
Rel.

CAT NO.	ANALYSIS NAME	AS RECEIVED RESULTS	AS RECEIVED LIMIT OF QUANTITATION	UNITS	DRY WEIGHT RESULTS	DRY WEIGHT LIMIT OF QUANTITATION
0155	Lead	106.	10.	mg/kg	120.	11.
0118	Moisture	11.9	0.50	% by wt.		

1 COPY TO ICF Kaiser Engineers, Inc. ATTN: Mr. Doug Taylor

Questions? Contact your Client Services Representative
De Brooks at (717) 656-2300
16:36:55 D 0001 31 130462 561074
320 0.00 00000000 ASR000

Respectfully Submitted
Ramona V. Layman
Manager, Metals/Leachates

Lancaster Laboratories
2425 New Holland Pike
PO Box 12425
Lancaster, PA 17605-2425
717-656-2300 Fax 717-656-2681

MEMBER ACIL

See reverse side for explanation of symbols and abbreviations

Analysis Report

Lancaster Laboratories
A division of Thermo Analytical Inc.

LLI Sample No. SW 2694511
Collected: 4/15/97 at 14:50 by CC

Submitted: 4/16/97 Reported: 4/17/97
Discard: 5/ 2/97

MOW-48-233 Matrix Spike Dup. Composite Soil Sample

Account No: 07867
ICF Kaiser Engineers, Inc.
Gateway View Plaza
1600 W. Carson St.
Pittsburgh PA 15219

P.O. 66473
Rel.

Morgantown Ordnance Works Project No. 66473
233-- SDG#: XXX01-MSD

CAT NO.	ANALYSIS NAME	AS RECEIVED RESULTS	AS RECEIVED LIMIT OF QUANTITATION	UNITS	DRY WEIGHT RESULTS	DRY WEIGHT LIMIT OF QUANTITATION
0155	Lead	112.	10.	mg/kg	128.	11.
0118	Moisture	11.9	0.50	% by wt.		

1 COPY TO ICF Kaiser Engineers, Inc. ATTN: Mr. Doug Taylor

Questions? Contact your Client Services Representative
De Brooks at (717) 656-2300
16:37:02 D 0001 31 130462 561074
320 0.00 00000000 ASR000

Respectfully Submitted
Ramona V. Layman
Manager, Metals/Leachates

MEMBER ACIL

Lancaster Laboratories
2425 New Holland Pike
PO Box 12425
Lancaster PA 17605-2425
717-656-2300 Fax 717-656-2681

See reverse side for explanation of symbols and abbreviations

Analysis Report

Lancaster Laboratories
A division of Thermo Analytical Inc.

LLI Sample No. SW 2694512
Collected: 4/15/97 at 14:50 by CC

Submitted: 4/16/97 Reported: 4/17/97
Discard: 5/ 2/97

MOW-4B-233 Duplicate Composite Soil Sample

Morgantown Ordnance Works Project No. 66473
233-- SDG#: XXX01-DUP

Account No: 07867
ICF Kaiser Engineers, Inc.
Gateway View Plaza
1600 W. Carson St.
Pittsburgh PA 15219

P.O. 66473
Rel.

CAT NO.	ANALYSIS NAME	AS RECEIVED RESULTS	AS RECEIVED LIMIT OF QUANTITATION	UNITS	DRY WEIGHT RESULTS	DRY WEIGHT LIMIT OF QUANTITATION
0155	Lead	46.9	9.9	mg/kg	53.	11.
0118	Moisture	11.9	0.50	% by wt.		
0121	Moisture Duplicate	11.4	0.50	% by wt.		

The duplicate moisture value is provided to assess the precision of the moisture test. For comparability purposes, the initial moisture determination is the value used to perform dry weight calculations.

1 COPY TO ICF Kaiser Engineers, Inc. ATTN: Mr. Doug Taylor

Questions? Contact your Client Services Representative
De Brooks at (717) 656-2300
16:37:08 D 0001 31 130462 561074
320 0.00 00000000 ASR000

Respectfully Submitted
Ramona V. Layman
Manager, Metals/Leachates

MEMBER ACIL
Lancaster Laboratories
2425 West Hamilton Pike
P.O. Box 12425
Lancaster, PA 17605-2425
717-656-2300 Fax 717-656-2681

See reverse side for explanation of symbols and abbreviations.

Analysis Report

Lancaster Laboratories
A division of Thermo Analytical Inc.

LLI Sample No. SW 2694513
Collected: 4/15/97 at 15:30 by CC

Submitted: 4/16/97 Reported: 4/17/97
Discard: 5/ 2/97

MOW-2-234 Composite Soil Sample

Morgantown Ordnance Works Project No. 66473

Account No: 07867
ICF Kaiser Engineers, Inc.
Gateway View Plaza
1600 W. Carson St.
Pittsburgh PA 15219

P.O. 66473
Rel.

CAT NO.	ANALYSIS NAME	AS RECEIVED RESULTS	AS RECEIVED LIMIT OF QUANTITATION	UNITS	DRY WEIGHT RESULTS	DRY WEIGHT LIMIT OF QUANTITATION
0155	Lead	3,550.	190.	mg/kg	5,240.	290.
0111	Moisture	32.3	0.50	% by wt.		

"Moisture" represents the loss in weight of the sample after oven drying at 103 - 105 degrees Celsius.

1 COPY TO ICF Kaiser Engineers, Inc. ATTN: Mr. Doug Taylor

Questions? Contact your Client Services Representative
De Brooks at (717) 656-2300
16:37:14 D 0001 31 130462 561074
320 0.00 00005330 ASR000

Respectfully Submitted
Ramona V. Layman
Manager, Metals/Leachates

MEMBER ACIL

Lancaster Laboratories
2425 New Holland Pike
PO Box 12425
Lancaster, PA 17605-2425
717-656-2300 Fax 717-656-2681

See reverse side for explanation of symbols and abbreviations

Analysis Report

Lancaster Laboratories
A division of Thermo Analytical Inc.

LLI Sample No. SW 2694514
Collected: 4/15/97 at 15:45 by CC

Submitted: 4/16/97 Reported: 4/17/97
Discard: 5/ 2/97

MOW-8-235 Composite Soil Sample

Morgantown Ordnance Works Project No. 66473

Account No: 07867
ICF Kaiser Engineers, Inc.
Gateway View Plaza
1600 W. Carson St.
Pittsburgh PA 15219

P.O. 66473
Rel.

CAT NO.	ANALYSIS NAME	AS RECEIVED RESULTS	AS RECEIVED LIMIT OF QUANTITATION	UNITS	DRY WEIGHT RESULTS	DRY WEIGHT LIMIT OF QUANTITATION
0155	Lead	963.	49.	mg/kg	1,180.	60.
0111	Moisture	18.7	0.50	% by wt.		

"Moisture" represents the loss in weight of the sample after oven drying at 103 - 105 degrees Celsius.

1 COPY TO ICF Kaiser Engineers, Inc. ATTN: Mr. Doug Taylor

Questions? Contact your Client Services Representative
De Brooks at (717) 656-2300
16:37:21 D 0001 31 130462 561074
320 0.00 00005330 ASR000

Respectfully Submitted
Ramona V. Layman
Manager, Metals/Leachates

Lancaster Laboratories
2425 New Holland Pike
PO Box 12425
Lancaster PA 17605-2425
717-656-2300 Fax 717-656-2681

MEMBER ACIL

See reverse side for explanation of symbols and abbreviations

Analysis Report

Lancaster Laboratories
A division of Thermo Analytical Inc.

LLI Sample No. SW 2694515
Collected: 4/15/97 at 15:48 by CC

Submitted: 4/16/97 Reported: 4/17/97
Discard: 5/ 2/97

MOW-8-236 Composite Soil Sample

Morgantown Ordnance Works Project No. 66473

Account No: 07867
ICF Kaiser Engineers, Inc.
Gateway View Plaza
1600 W. Carson St.
Pittsburgh PA 15219

P.O. 66473
Rel.

CAT NO.	ANALYSIS NAME	AS RECEIVED RESULTS	AS RECEIVED LIMIT OF QUANTITATION	UNITS	DRY WEIGHT RESULTS	DRY WEIGHT LIMIT OF QUANTITATION
0155	Lead	1,070.	50.	mg/kg	1,270.	59.
0111	Moisture	15.9	0.50	% by wt.		

"Moisture" represents the loss in weight of the sample after oven drying at 103 - 105 degrees Celsius.

1 COPY TO ICF Kaiser Engineers, Inc. ATTN: Mr. Doug Taylor

Questions? Contact your Client Services Representative
De Brooks at (717) 656-2300
16:37:27 D 0001 31 130462 561074
320 0.00 00005330 ASR000

Respectfully Submitted
Ramona V. Layman
Manager, Metals/Leachates

Lancaster Laboratories
2425 New Holland Pike
PO Box 12425
Lancaster, PA 17605-2425
717-656-2300 Fax 717-656-2681

MEMBER ACIL

See reverse side for explanation of symbols and abbreviations

2210 Rev. 5/01.96

Analysis Report

Lancaster Laboratories
A division of Thermo Analytical Inc.

LLI Sample No. SW 2694516
Collected: 4/15/97 at 15:49 by CC

Submitted: 4/16/97 Reported: 4/17/97
Discard: 5/ 2/97

MOW-8-237 Composite Soil Sample

Morgantown Ordnance Works Project No. 66473

Account No: 07867
ICF Kaiser Engineers, Inc.
Gateway View Plaza
1600 W. Carson St.
Pittsburgh PA 15219

P.O. 66473
Rel.

CAT NO.	ANALYSIS NAME	AS RECEIVED RESULTS	AS RECEIVED LIMIT OF QUANTITATION	UNITS	DRY WEIGHT RESULTS	DRY WEIGHT LIMIT OF QUANTITATION
0155	Lead	680.	50.	mg/kg	863.	63.
0111	Moisture	21.2	0.50	% by wt.		

"Moisture" represents the loss in weight of the sample after oven drying at 103 - 105 degrees Celsius.

1 COPY TO ICF Kaiser Engineers, Inc. ATTN: Mr. Doug Taylor

Questions? Contact your Client Services Representative
De Brooks at (717) 656-2300
16:37:34 D 0001 31 130462 561074
320 0.00 00005330 ASR000

Respectfully Submitted
Ramona V. Layman
Manager, Metals/Leachates

MEMBER ACIL
Lancaster Laboratories
2425 New Holland Pike
PO Box 12425
Lancaster, PA 17605-2425
717-656-2300 Fax 717-656-2681

See reverse side for explanation of symbols and abbreviations

Analysis Report

Lancaster Laboratories
A division of Thermo Analytical Inc.

LLI Sample No. SW 2694517
Collected: 4/15/97 at 15:55 by CC

Submitted: 4/16/97 Reported: 4/17/97
Discard: 5/ 2/97

MOW-8-238 Composite Soil Sample

Morgantown Ordnance Works Project No. 66473

Account No: 07867
ICF Kaiser Engineers, Inc.
Gateway View Plaza
1600 W. Carson St.
Pittsburgh PA 15219

P.O. 66473
Rel.

CAT NO.	ANALYSIS NAME	AS RECEIVED RESULTS	AS RECEIVED LIMIT OF QUANTITATION	UNITS	DRY WEIGHT RESULTS	DRY WEIGHT LIMIT OF QUANTITATION
0155	Lead	170.	9.8	mg/kg	200.	11.
0111	Moisture	14.6	0.50	% by wt.		

"Moisture" represents the loss in weight of the sample after oven drying at 103 - 105 degrees Celsius.

1 COPY TO ICF Kaiser Engineers, Inc. ATTN: Mr. Doug Taylor

Questions? Contact your Client Services Representative
De Brooks at (717) 656-2300
16:37:40 D 0001 31 130462 561074
320 0.00 00005330 ASR000

Respectfully Submitted
Ramona V. Layman
Manager, Metals/Leachates

Lancaster Laboratories
2425 New Holland Pike
PO Box 12425
Lancaster, PA 17605-2425
717-656-2300 Fax 717-656-2681

MEMBER ACIL

See reverse side for explanation of symbols and abbreviations

Analysis Report

Lancaster Laboratories
A division of Thermo Analytical Inc.

LLI Sample No. SW 2694518
Collected: 4/15/97 at 15:57 by CC

Submitted: 4/16/97 Reported: 4/17/97
Discard: 5/ 2/97

MOW-8-239 Composite Soil Sample

Morgantown Ordnance Works Project No. 66473

Account No: 07867
ICF Kaiser Engineers, Inc.
Gateway View Plaza
1600 W. Carson St.
Pittsburgh PA 15219

P.O. 66473
Rel.

CAT NO.	ANALYSIS NAME	AS RECEIVED RESULTS	AS RECEIVED LIMIT OF QUANTITATION	UNITS	DRY WEIGHT RESULTS	DRY WEIGHT LIMIT OF QUANTITATION
0155	Lead	216.	9.7	mg/kg	246.	11.
0111	Moisture	12.1	0.50	% by wt.		

"Moisture" represents the loss in weight of the sample after oven drying at 103 - 105 degrees Celsius.

1 COPY TO ICF Kaiser Engineers, Inc. ATTN: Mr. Doug Taylor

Questions? Contact your Client Services Representative
De Brooks at (717) 656-2300
16:37:47 D 0001 31 130462 561074
320 0.00 00005330 ASR000

Respectfully Submitted
Ramona V. Layman
Manager, Metals/Leachates

Lancaster Laboratories
2425 New Holland Pike
PO Box 12425
Lancaster PA 17605-2425
717-656-2300 Fax 717-656-2681

MEMBER ACIL

See reverse side for explanation of symbols and abbreviations

Analysis Report

Lancaster Laboratories
A division of Thermo Analytical Inc.

LLI Sample No. SW 2694519
Collected: 4/15/97 at 16:00 by CC

Submitted: 4/16/97 Reported: 4/17/97
Discard: 5/ 2/97

MOW-8-240 Composite Soil Sample

Morgantown Ordnance Works Project No. 66473

Account No: 07867
ICF Kaiser Engineers, Inc.
Gateway View Plaza
1600 W. Carson St.
Pittsburgh PA 15219

P.O. 66473
Rel.

CAT NO.	ANALYSIS NAME	AS RECEIVED RESULTS	AS RECEIVED LIMIT OF QUANTITATION	AS RECEIVED UNITS	DRY WEIGHT RESULTS	DRY WEIGHT LIMIT OF QUANTITATION
0155	Lead	620.	49.	mg/kg	759.	60.
0111	Moisture	18.3	0.50	% by wt.		

"Moisture" represents the loss in weight of the sample after oven drying at 103 - 105 degrees Celsius.

1 COPY TO ICF Kaiser Engineers, Inc. ATTN: Mr. Doug Taylor

Questions? Contact your Client Services Representative
De Brooks at (717) 656-2300
16:37:53 D 0001 31 130462 561074
320 0.00 00005330 ASR000

Respectfully Submitted
Ramona V. Layman
Manager, Metals/Leachates

Lancaster Laboratories
2425 New Holland Pike
PO Box 12425
Lancaster PA 17605-2425
717-656-2300 Fax 717-656-2681

MEMBER ACIL

See reverse side for explanation of symbols and abbreviations

Analysis Report

Lancaster Laboratories
A division of Thermo Analytical Inc.

LLI Sample No. SW 2694520
Collected: 4/15/97 at 16:05 by CC

Submitted: 4/16/97 Reported: 4/17/97
Discard: 5/ 2/97

MOW-8-241 Composite Soil Sample

Morgantown Ordnance Works Project No. 66473

Account No: 07867
ICF Kaiser Engineers, Inc.
Gateway View Plaza
1600 W. Carson St.
Pittsburgh PA 15219

P.O. 66473
Rel.

CAT NO.	ANALYSIS NAME	AS RECEIVED RESULTS	AS RECEIVED LIMIT OF QUANTITATION	UNITS	DRY WEIGHT RESULTS	DRY WEIGHT LIMIT OF QUANTITATION
0155	Lead	393.	9.9	mg/kg	457.	12.
0111	Moisture	14.0	0.50	% by wt.		

"Moisture" represents the loss in weight of the sample after oven drying at 103 - 105 degrees Celsius.

1 COPY TO ICF Kaiser Engineers, Inc. ATTN: Mr. Doug Taylor

Questions? Contact your Client Services Representative
De Brooks at (717) 656-2300
16:37:58 D 0001 31 130462 561074
320 0.00 00005330 ASR000

Respectfully Submitted
Ramona V. Layman
Manager, Metals/Leachates

MEMBER ACIL

Lancaster Laboratories
2425 New Holland Pike
PO Box 12425
Lancaster PA 17605-2425
Tel (717) 656-2300 Fax (717) 656-2681

See reverse side for explanation of symbols and abbreviations

Analysis Report

Lancaster Laboratories
A division of Thermo Analytical Inc.

LLI Sample No. SW 2694521
Collected: 4/15/97 at 16:10 by CC

Submitted: 4/16/97 Reported: 4/17/97
Discard: 5/ 2/97

MOW-8B-242 Composite Soil Sample

Morgantown Ordnance Works Project No. 66473

Account No: 07867
ICF Kaiser Engineers, Inc.
Gateway View Plaza
1600 W. Carson St.
Pittsburgh PA 15219

P.O. 66473
Rel.

CAT NO.	ANALYSIS NAME	AS RECEIVED RESULTS	AS RECEIVED LIMIT OF QUANTITATION	AS RECEIVED UNITS	DRY WEIGHT RESULTS	DRY WEIGHT LIMIT OF QUANTITATION
0155	Lead	113.	9.7	mg/kg	134.	12.
0111	Moisture	15.8	0.50	% by wt.		

"Moisture" represents the loss in weight of the sample after oven drying at 103 - 105 degrees Celsius.

1 COPY TO ICF Kaiser Engineers, Inc. ATTN: Mr. Doug Taylor

Questions? Contact your Client Services Representative
De Brooks at (717) 656-2300
16:38:05 D 0001 31 130462 561074
320 0.00 00005330 ASR000

Respectfully Submitted
Ramona V. Layman
Manager, Metals/Leachates

Lancaster Laboratories
2425 New Holland Pike
PO Box 12425
Lancaster, PA 17605-2425
717-656-2300 Fax 717-656-2681

MEMBER ACIL

See reverse side for explanation of symbols and abbreviations

Analysis Report

Lancaster Laboratories
A division of Thermo Analytical Inc.

LLI Sample No. SW 2694522
Collected: 4/15/97 at 16:20 by CC

Submitted: 4/16/97 Reported: 4/17/97
Discard: 5/ 2/97

MOW-10-243 Composite Soil Sample

Morgantown Ordnance Works Project No. 66473

Account No: 07867
ICF Kaiser Engineers, Inc.
Gateway View Plaza
1600 W. Carson St.
Pittsburgh PA 15219

P.O. 66473
Rel.

CAT NO.	ANALYSIS NAME	AS RECEIVED RESULTS	AS RECEIVED LIMIT OF QUANTITATION	AS RECEIVED UNITS	DRY WEIGHT RESULTS	DRY WEIGHT LIMIT OF QUANTITATION
0155	Lead	190.	10.	mg/kg	232.	12.
0111	Moisture	17.8	0.50	% by wt.		

"Moisture" represents the loss in weight of the sample after oven drying at 103 - 105 degrees Celsius.

1 COPY TO ICF Kaiser Engineers, Inc. ATTN: Mr. Doug Taylor

Questions? Contact your Client Services Representative
De Brooks at (717) 656-2300
16:38:10 D 0001 31 130462 561074
320 0.00 00005330 ASR000

Respectfully Submitted
Ramona V. Layman
Manager, Metals/Leachates

MEMBER ACIL
Lancaster Laboratories
2425 New Holland Pike
PO Box 12425
Lancaster PA 17605-2425
717-656-2300 Fax 717-656-2681

See reverse side for explanation of symbols and abbreviations

Analysis Report

Lancaster Laboratories
A division of Thermo Analytical Inc.

LLI Sample No. SW 2694523
Collected: 4/15/97 at 16:25 by CC

Submitted: 4/16/97 Reported: 4/17/97
Discard: 5/ 2/97

MOW-10-244 Composite Soil Sample

Morgantown Ordnance Works Project No. 66473

Account No: 07867
ICF Kaiser Engineers, Inc.
Gateway View Plaza
1600 W. Carson St.
Pittsburgh PA 15219

P.O. 66473
Rel.

CAT NO.	ANALYSIS NAME	AS RECEIVED RESULTS	AS RECEIVED LIMIT OF QUANTITATION	UNITS	DRY WEIGHT RESULTS	DRY WEIGHT LIMIT OF QUANTITATION
0155	Lead	551.	50.	mg/kg	635.	57.
0111	Moisture	13.2	0.50	% by wt.		

"Moisture" represents the loss in weight of the sample after oven drying at 103 - 105 degrees Celsius.

1 COPY TO ICF Kaiser Engineers, Inc. ATTN: Mr. Doug Taylor

Questions? Contact your Client Services Representative
De Brooks at (717) 656-2300
16:38:15 0 0001 31 130462 561074
320 0.00 00005330 ASR000

Respectfully Submitted
Ramona V. Layman
Manager, Metals/Leachates

MEMBER ACIL

Lancaster Laboratories
2425 New Holland Pike
PO Box 12425
Lancaster PA 17605-2425
717 656-2300 Fax 717 656-2681

See reverse side for explanation of symbols and abbreviations

Analysis Report

Lancaster Laboratories
A division of Thermo Analytical Inc.

LLI Sample No. SW 2694524
Collected: 4/15/97 at 16:30 by CC

Submitted: 4/16/97 Reported: 4/17/97
Discard: 5/ 2/97

MOW-10-245 Composite Soil Sample

Morgantown Ordnance Works Project No. 66473

Account No: 07867
ICF Kaiser Engineers, Inc.
Gateway View Plaza
1600 W. Carson St.
Pittsburgh PA 15219

P.O. 66473
Rel.

CAT NO.	ANALYSIS NAME	AS RECEIVED RESULTS	AS RECEIVED LIMIT OF QUANTITATION	UNITS	DRY WEIGHT RESULTS	DRY WEIGHT LIMIT OF QUANTITATION
0155	Lead	256.	9.9	mg/kg	302.	12.
0111	Moisture	15.1	0.50	% by wt.		

"Moisture" represents the loss in weight of the sample after oven drying at 103 - 105 degrees Celsius.

1 COPY TO ICF Kaiser Engineers, Inc. ATTN: Mr. Doug Taylor

Questions? Contact your Client Services Representative
De Brooks at (717) 656-2300
16:38:20 D 0001 31 130462 561074
320 0.00 00005330 ASR000

Respectfully Submitted
Ramona V. Layman
Manager, Metals/Leachates

Lancaster Laboratories
2425 New Holland Pike
PO Box 12425
Lancaster, PA 17605-2425
717-656-2300 Fax (717) 656-2681

MEMBER ACIL

See reverse side for explanation of symbols and abbreviations

Analysis Report

Lancaster Laboratories
A division of Thermo Analytical Inc.

LLI Sample No. SW 2694525
Collected: 4/15/97 at 16:35 by CC

Submitted: 4/16/97 Reported: 4/17/97
Discard: 5/ 2/97

MOW-10-246 Composite Soil Sample

Morgantown Ordnance Works Project No. 66473

Account No: 07867
ICF Kaiser Engineers, Inc.
Gateway View Plaza
1600 W. Carson St.
Pittsburgh PA 15219

P.O. 66473
Rel.

CAT NO.	ANALYSIS NAME	AS RECEIVED RESULTS	AS RECEIVED LIMIT OF QUANTITATION	UNITS	DRY WEIGHT RESULTS	DRY WEIGHT LIMIT OF QUANTITATION
0155	Lead	545.	50.	mg/kg	645.	59.
0111	Moisture	15.6	0.50	% by wt.		

"Moisture" represents the loss in weight of the sample after oven drying at 103 - 105 degrees Celsius.

1 COPY TO ICF Kaiser Engineers, Inc. ATTN: Mr. Doug Taylor

Questions? Contact your Client Services Representative
De Brooks at (717) 656-2300
16:38:27 D 0001 31 130462 561074
320 0.00 00005330 ASR000

Respectfully Submitted
Ramona V. Layman
Manager, Metals/Leachates

MEMBER ACIL
Lancaster Laboratories
2425 New Holland Pike
PO Box 12425
Lancaster, PA 17605-2425
717-656-2300 Fax [illegible]

See reverse side for explanation of symbols and abbreviations

Analysis Report

Lancaster Laboratories
A division of Thermo Analytical Inc.

LLI Sample No. SW 2694526
Collected: 4/15/97 at 16:40 by CC

Submitted: 4/16/97 Reported: 4/17/97
Discard: 5/ 2/97

MOW-10-247 Composite Soil Sample

Morgantown Ordnance Works Project No. 66473

Account No: 07867
ICF Kaiser Engineers, Inc.
Gateway View Plaza
1600 W. Carson St.
Pittsburgh PA 15219

P.O. 66473
Rel.

CAT NO.	ANALYSIS NAME	AS RECEIVED RESULTS	AS RECEIVED LIMIT OF QUANTITATION	AS RECEIVED UNITS	DRY WEIGHT RESULTS	DRY WEIGHT LIMIT OF QUANTITATION
0155	Lead	276.	9.8	mg/kg	329.	12.
0111	Moisture	16.3	0.50	% by wt.		

"Moisture" represents the loss in weight of the sample after oven drying at 103 - 105 degrees Celsius.

1 COPY TO ICF Kaiser Engineers, Inc. ATTN: Mr. Doug Taylor

Questions? Contact your Client Services Representative
De Brooks at (717) 656-2300
16:38:36 D 0001 31 130462 561074
320 0.00 00005330 ASR000

Respectfully Submitted
Ramona V. Layman
Manager, Metals/Leachates

MEMBER ACIL
Lancaster Laboratories
2425 New Holland Pike
PO Box 12425
Lancaster PA 17605-2425
717 656-2300 Fax 717 656-2681

See reverse side for explanation of symbols and abbreviations

Analysis Report

Lancaster Laboratories
A division of Thermo Analytical Inc.

LLI Sample No. SW 2694527
Collected: 4/15/97 at 16:45 by CC

Submitted: 4/16/97 Reported: 4/17/97
Discard: 5/ 2/97

MOW-10-248 Composite Soil Sample

Morgantown Ordnance Works Project No. 66473

Account No: 07867
ICF Kaiser Engineers, Inc.
Gateway View Plaza
1600 W. Carson St.
Pittsburgh PA 15219

P.O. 66473
Rel.

CAT NO.	ANALYSIS NAME	AS RECEIVED RESULTS	AS RECEIVED LIMIT OF QUANTITATION	UNITS	DRY WEIGHT RESULTS	DRY WEIGHT LIMIT OF QUANTITATION
0155	Lead	171.	9.8	mg/kg	190.	11.
0111	Moisture	9.93	0.50	% by wt.		

"Moisture" represents the loss in weight of the sample after oven drying at 103 - 105 degrees Celsius.

1 COPY TO ICF Kaiser Engineers, Inc. ATTN: Mr. Doug Taylor

Questions? Contact your Client Services Representative
De Brooks at (717) 656-2300
16:38:43 D 0001 31 130462 561074
320 0.00 00005330 ASR000

Respectfully Submitted
Ramona V. Layman
Manager, Metals/Leachates

Lancaster Laboratories
2425 New Holland Pike
PO Box 12425
Lancaster PA 17605-2425
717-656-2300 Fax 717-656-2681

MEMBER ACIL

See reverse side for explanation of symbols and abbreviations

Analysis Report

Lancaster Laboratories
A division of Thermo Analytical Inc.

LLI Sample No. SW 2694528
Collected: 4/15/97 at 16:47 by CC

Submitted: 4/16/97 Reported: 4/17/97
Discard: 5/ 2/97

MOW-10-249 Composite Soil Sample

Morgantown Ordnance Works Project No. 66473

Account No: 07867
ICF Kaiser Engineers, Inc.
Gateway View Plaza
1600 W. Carson St.
Pittsburgh PA 15219

P.O. 66473
Rel.

CAT NO.	ANALYSIS NAME	AS RECEIVED RESULTS	AS RECEIVED LIMIT OF QUANTITATION	UNITS	DRY WEIGHT RESULTS	DRY WEIGHT LIMIT OF QUANTITATION
0155	Lead	249.	9.9	mg/kg	297.	12.
0111	Moisture	16.0	0.50	% by wt.		

"Moisture" represents the loss in weight of the sample after oven drying at 103 - 105 degrees Celsius.

1 COPY TO ICF Kaiser Engineers, Inc. ATTN: Mr. Doug Taylor

Questions? Contact your Client Services Representative
De Brooks at (717) 656-2300
16:38:50 D 0001 31 130462 561074
320 0.00 00005330 ASR000

Respectfully Submitted
Ramona V. Layman
Manager, Metals/Leachates

Lancaster Laboratories
2425 New Holland Pike
PO Box 12425
Lancaster, PA 17605-2425
717-656-2300 Fax 717-656-2681

MEMBER ACIL

See reverse side for explanation of symbols and abbreviations

Analysis Report

Lancaster Laboratories
A division of Thermo Analytical Inc.

LLI Sample No. SW 2694529
Collected: 4/15/97 at 16:48 by CC

Submitted: 4/16/97 Reported: 4/17/97
Discard: 5/ 2/97

MOW-10-250 Composite Soil Sample

Morgantown Ordnance Works Project No. 66473

Account No: 07867
ICF Kaiser Engineers, Inc.
Gateway View Plaza
1600 W. Carson St.
Pittsburgh PA 15219

P.O. 66473
Rel.

CAT NO.	ANALYSIS NAME	AS RECEIVED RESULTS	AS RECEIVED LIMIT OF QUANTITATION	AS RECEIVED UNITS	DRY WEIGHT RESULTS	DRY WEIGHT LIMIT OF QUANTITATION
0155	Lead	14.5	9.8	mg/kg	16.	11.
0111	Moisture	9.38	0.50	% by wt.		

"Moisture" represents the loss in weight of the sample after oven drying at 103 - 105 degrees Celsius.

1 COPY TO ICF Kaiser Engineers, Inc. ATTN: Mr. Doug Taylor

Questions? Contact your Client Services Representative
De Brooks at (717) 656-2300
16:38:57 D 0001 31 130462 561074
320 0.00 00005330 ASR000

Respectfully Submitted
Ramona V. Layman
Manager, Metals/Leachates

MEMBER ACIL

Lancaster Laboratories
2425 Newport Road
P.O. Box 12425
Lancaster PA 17605-2425
(717) 656-2300 Fax (717) 656-2681

See reverse side for explanation of symbols and abbreviations

Analysis Report

Lancaster Laboratories
A division of Thermo Analytical Inc.

LLI Sample No. SW 2694530
Collected: 4/15/97 at 16:49 by CC

Submitted: 4/16/97 Reported: 4/17/97
Discard: 5/ 2/97

MOW-10B-251 Composite Soil Sample

Morgantown Ordnance Works Project No. 66473

Account No: 07867
ICF Kaiser Engineers, Inc.
Gateway View Plaza
1600 W. Carson St.
Pittsburgh PA 15219

P.O. 66473
Rel.

CAT NO.	ANALYSIS NAME	AS RECEIVED RESULTS	AS RECEIVED LIMIT OF QUANTITATION	UNITS	DRY WEIGHT RESULTS	DRY WEIGHT LIMIT OF QUANTITATION
0155	Lead	145.	9.9	mg/kg	169.	12.
0111	Moisture	14.6	0.50	% by wt.		

"Moisture" represents the loss in weight of the sample after oven drying at 103 - 105 degrees Celsius.

1 COPY TO ICF Kaiser Engineers, Inc. ATTN: Mr. Doug Taylor

Questions? Contact your Client Services Representative
De Brooks at (717) 656-2300
16:39:06 D 0001 31 130462 561074
320 0.00 00005330 ASR000

Respectfully Submitted
Ramona V. Layman
Manager, Metals/Leachates

MEMBER ACIL
Lancaster Laboratories
2425 New Holland Pike
PO Box 12425
Lancaster, PA 17605-2425
717-656-2300 Fax 717-656-2681

See reverse side for explanation of symbols and abbreviations

Analysis Report

Lancaster Laboratories
A division of Thermo Analytical Inc.

LLI Sample No. WW 2694531
Collected: 4/15/97 at 13:00 by CC

Submitted: 4/16/97 Reported: 4/17/97
Discard: 5/ 2/97

MOW-RB-11 Grab Water Sample

Morgantown Ordnance Works Project No. 66473

Account No: 07867
ICF Kaiser Engineers, Inc.
Gateway View Plaza
1600 W. Carson St.
Pittsburgh PA 15219

P.O. 66473
Rel.

CAT NO.	ANALYSIS NAME	AS RECEIVED RESULTS	LIMIT OF QUANTITATION	UNITS
0255	Lead	< 0.10	0.10	mg/l

1 COPY TO ICF Kaiser Engineers, Inc. ATTN: Mr. Doug Taylor

Questions? Contact your Client Services Representative
De Brooks at (717) 656-2300
16:39:14 D 0001 31 130462 561074
320 0.00 00003031 ASR000

Respectfully Submitted
Ramona V. Layman
Manager, Metals/Leachates

MEMBER ACIL

Lancaster Laboratories
2425 Newport Road
PO Box 12425
Lancaster PA 17605-2425
717-656-2300 Fax 717-656-2681

See reverse side for explanation of symbols and abbreviations

ICF KAISER ENGINEERS

CHAIN OF CUSTODY RECORD

№ 5000

PROJ. NO.	PROJECT NAME
66473	MORGANTOWN ORDNANCE WORKS

SAMPLERS: (Signature) Christine Y. Luhett

STA. NO.	DATE	TIME	COMP.	GRAB	STATION LOCATION	NO. OF CONTAINERS	BENZENE						REMARKS
	4/10/97		X		C-SED-5A-WC	24	X						Waste characterization samples per Kathy Herrington's request.

Relinquished by: (Signature)	Date/Time	Received by: (Signature)	Relinquished by: (Signature)	Date/Time	Received by: (Signature)
Christine Y. Luhett	4/15/97 0900				
Relinquished by: (Signature)	Date/Time	Received by: (Signature)	Relinquished by: (Signature)	Date/Time	Received by: (Signature)
Relinquished by: (Signature)	Date/Time	Received for Laboratory by: (Signature)	Date/Time	Remarks	

ICF KAISER ENGINEERS

CHAIN OF CUSTODY RECORD

№ 0001

PROJ. NO.	PROJECT NAME
66473	MORGANTOWN ORDNANCE WORKS

SAMPLERS: (Signature) Christine Y. Cuthett

STA. NO.	DATE	TIME	COMP.	GRAB	STATION LOCATION	NO. OF CONTAINERS	Lead	Mercury						REMARKS
	4/10/97		X		MOW-LHS-WC	24	X							Waste characterization per
	4/10/97		X		MOW-BS-WC	24		X						Kathy Herringtons request.

Relinquished by: (Signature)	Date/Time	Received by: (Signature)	Relinquished by: (Signature)	Date/Time	Received by: (Signature)
Christine Y. Cuthett	4/15/97 0900				
Relinquished by: (Signature)	Date/Time	Received by: (Signature)	Relinquished by: (Signature)	Date/Time	Received by: (Signature)
Relinquished by: (Signature)	Date/Time	Received for Laboratory by: (Signature)	Date/Time	Remarks	

548 475 3161 ICF KAISER REMEDIATION

ICF KAISER ENGINEERS

CHAIN OF CUSTODY RECORD

№ 5002

PROJ. NO.	PROJECT NAME
66473	Morgantown Ordnance Works

SAMPLERS: (Signature) Christine T Cuchett

STA. NO.	DATE	TIME	COMP	GRAB	STATION LOCATION	NO. OF CONTAINERS	Total Lead						REMARKS
	4/15/97	1335	X		MOW-1-226	1	X						
		1340	X		MOW-1-227	1	X						24 hr turn
		1345	X		MOW-1B-228	1	X						
		1346	X		MOW-1B-228D	1	X						
		1420	X		MOW-4-229	1	X						
		1425	X		MOW-4-230	1	X						
		1435	X		MOW-4-231	1	X						
		1445	X		MOW-4-232	3	X						
		1445	X		MOW-4-232	1	X						
		1450	X		MOW-4B-233 MS MSD	3	X						
		1300		X	RB-11	1	X						Rinsate Blank

Relinquished by: (Signature)	Date/Time	Received by: (Signature)	Relinquished by: (Signature)	Date/Time	Received by: (Signature)
Christine T Cuchett	4/15/97				
Relinquished by: (Signature)	Date/Time	Received by: (Signature)	Relinquished by: (Signature)	Date/Time	Received by: (Signature)
Relinquished by: (Signature)	Date/Time	Received for Laboratory by: (Signature)	Date/Time	Remarks	

820-5

Distribution: Original Accompanies Shipment, Copy to Coordinator Field Files

ORIGINAL (Red)

P.03 540 475 3161 ICF KAISER REMEDIATION

ICF KAISER ENGINEERS

№ 5005

CHAIN OF CUSTODY RECORD

PROJ. NO.	PROJECT NAME
66473	MORGANTOWN ORDNANCE

SAMPLERS: (Signature) [signature]

STA. NO.	DATE	TIME	COMP.	GRAB	STATION LOCATION	NO. OF CONTAINERS	TOTAL LEAD						REMARKS
	4/15/97	1647	X		MOW-10-249	1	X						
	4/15/97	1648	X		MOW-10-250	1	X						
	4/15/97	1649	X		MOW-10B-251	1	X						24 hr turn!

Relinquished by: (Signature)	Date/Time	Received by: (Signature)	Relinquished by: (Signature)	Date/Time	Received by: (Signature)
[signature]	4/15/97 1600				
Relinquished by: (Signature)	Date/Time	Received by: (Signature)	Relinquished by: (Signature)	Date/Time	Received by: (Signature)
Relinquished by: (Signature)	Date/Time	Received for Laboratory by: (Signature)	Date/Time	Remarks	

820-5

Distribution: Original Accompanies Shipment, Copy to Coordinator Field Files

APR-15-97 23:41 AM ICF KAISER REMEDIATION 540 475 3161 P.04

ICF KAISER ENGINEERS

№ 5006

CHAIN OF CUSTODY RECORD

PROJ NO. 66473

PROJECT NAME: MORGANTOWN ORDNANCE

SAMPLERS: (Signature) [signature]

STA. NO.	DATE	TIME	COMP.	GRAB	STATION LOCATION	NO. OF CONTAINERS	TOC	COD, Phenol, Phen-DS, NH3	O+G	Benzene	Fe, Pb, Mn, Cu, Zn, Hg, Ni	8310, PCB	EPA 625	CN, CN dist	PH, TSS, F, IC, Cl	Trip Blank	REMARKS
	4/16/97	1130		X	RB-12	~~17~~ 20	X	X	X	X	X	X	X	X	X	X	14 day turn
	4/16/97	1230		X	MOW-041697-M1	3				X							★ 24 hr turn ★

Relinquished by: (Signature)	Date/Time	Received by: (Signature)	Relinquished by: (Signature)	Date/Time	Received by: (Signature)
[signature]	4/16/97 1500				
Relinquished by: (Signature)	Date/Time	Received by: (Signature)	Relinquished by: (Signature)	Date/Time	Received by: (Signature)
Relinquished by (Signature)	Date/Time	Received for Laboratory by: (Signature)	Date/Time	Remarks	

ICF KAISER ENGINEERS

№ 5007

CHAIN OF CUSTODY RECORD

PROJ. NO.	PROJECT NAME
66473	MORGANTOWN ORDNANCE

SAMPLERS: (Signature) Christine T. Cuchett

STA. NO.	DATE	TIME	COMP.	GRAB	STATION LOCATION	NO. OF CONTAINERS	TOC	COD, Phenol, Phenols, Nitrate	Cl + G	~~[illegible]~~ 8310, PCB	Fe, Pb, Mn, Cu, Zn, Hg, Al	EPA 625	CN, CN dist	PH, TSS, F, K, Cl	~~[illegible]~~	REMARKS
	4/16/97	1230		X	MOW-041697-M1	14	X	X	X	X	X	X	X	X		☆ 24 hr turn ☆

Relinquished by: (Signature)	Date/Time	Received by: (Signature)	Relinquished by: (Signature)	Date/Time	Received by: (Signature)
Christine T. Cuchett	4/16/97 1500				
Relinquished by: (Signature)	Date/Time	Received by: (Signature)	Relinquished by: (Signature)	Date/Time	Received by: (Signature)
Relinquished by: (Signature)	Date/Time	Received for Laboratory by: (Signature)	Date/Time	Remarks	

ICF KAISER REMEDIATION 540 475 3161

ICF KAISER ENGINEERS

CHAIN OF CUSTODY RECORD

№ 5010

PROJ. NO.: 66473

PROJECT NAME: MORGANTOWN ORDNANCE

SAMPLERS: (Signature) [signature]

STA. NO.	DATE	TIME	COMP	GRAB	STATION LOCATION	NO. OF CONTAINERS	TOC	COD, Phenol, Phen Ds, NH3	C + G	8310, PCB	Fe, Pb, Mn, Cu, Zn, Hg, Ni	EPA 625	CN, CN dist	PH, TSS, F, K, Cl	Benzene	REMARKS
	4/16/97	1730		X	MCW-041797-M1	17	X	X	X	X	X	X	X	X	X	

NOTE: 24 HR TURNAROUND

AIR BILL # 4147403072

Relinquished by: (Signature)	Date/Time	Received by: (Signature)	Relinquished by: (Signature)	Date/Time	Received by: (Signature)
[signature]	4/17-97 1800	FED X			
Relinquished by: (Signature)	Date/Time	Received by: (Signature)	Relinquished by: (Signature)	Date/Time	Received by: (Signature)
Relinquished by: (Signature)	Date/Time	Received for Laboratory by: (Signature)	Date/Time	Remarks	

ICF KAISER ENGINEERS

№ 5009

CHAIN OF CUSTODY RECORD

PROJ. NO.	PROJECT NAME
66473	MORGANTOWN ORDNANCE

SAMPLERS: (Signature) [signature]

STA. NO.	DATE	TIME	COMP	GRAB	STATION LOCATION	NO. OF CONTAINERS	MPI CUY PAHs						REMARKS
	4/16/97	1745	X		MOW-11-252	1	X						
		1750	X		MOW-11-253	1	X						
		1755	X		MOW-11-254	1	X						
		1800	X		MOW-11 255	1	X						NOTE:
		1805	X		MOW-11B-256	1	X						48 HR TURNAROUND
													AIR Bill #
													4147403072

Relinquished by: (Signature)	Date/Time	Received by: (Signature)	Relinquished by: (Signature)	Date/Time	Received by: (Signature)
[signature]	4-17-97 1800	FED X -			
Relinquished by: (Signature)	Date/Time	Received by: (Signature)	Relinquished by: (Signature)	Date/Time	Received by: (Signature)
Relinquished by: (Signature)	Date/Time	Received for Laboratory by: (Signature)	Date/Time	Remarks	

820-5

Distribution: Original Accompanies Shipment; Copy to Coordinator Field Files

ICF KAISER ENGINEERS

№ 5011

CHAIN OF CUSTODY RECORD

PROJ. NO.: 7004350000

PROJECT NAME: MORGANTOWN ORDINANCE WORKS

SAMPLERS: (Signature) Charles Haughn

STA. NO.	DATE	TIME	COMP	GRAB	STATION LOCATION	NO. OF CONTAINERS	Total Lead						REMARKS
	4/18/97		X		MOW-2-257	1	X						TWO DAY (48HR)
	↓		X		MOW-2-258	1	X						Turnaround
			X		MOW-2-259	1	X						

Relinquished by: (Signature)	Date/Time	Received by: (Signature)	Relinquished by: (Signature)	Date/Time	Received by: (Signature)
Charles E Haughn	4-18-97 1445				
Relinquished by: (Signature)	Date/Time	Received by: (Signature)	Relinquished by: (Signature)	Date/Time	Received by: (Signature)
Relinquished by: (Signature)	Date/Time	Received for Laboratory by: (Signature)	Date/Time	Remarks	

ICF KAISER ENGINEERS

№ 5013

CHAIN OF CUSTODY RECORD

PROJ. NO. 66473

PROJECT NAME: MORGANTOWN ORDANANCE

SAMPLERS: (Signature) [signature]

STA. NO.	DATE	TIME	COMP	GRAB	STATION LOCATION	NO. OF CONTAINERS	TOC	COD, Phenol, Phen, DS	O+G	Benzene	FE, PB, MNCU, ZN, Hg, AL	E310 PCB	EPA 625	CN, CN DIST	Ph, TSS, F, IL, CL	TRIP BLANK	REMARKS
	4/22/97	1010		X	MOW-042297-M2-1	17	X	X	X	X	X	X	X	X	X	M	
	4/22/97	1605		X	MOW 042297-M2-2	17	X	X	X	X	X	X	X	X	X	M	
																	NOTE: 24 HOUR TURN AROUND.
					~~GRAVEL Alley~~ Gfm ↑												
					COKE BATTER SAMPLES												
					should BE C1 + C2												
					Gfm. AS per												
					Christine Cockett												
																	AIR BILL #
																	4147403061
																	COOLER # C00427
																	C00207

Relinquished by: (Signature)	Date/Time	Received by: (Signature)	Relinquished by: (Signature)	Date/Time	Received by: (Signature)
[signature]	4/22/97 1900	FED X (CARRIER)			
Relinquished by: (Signature)	Date/Time	Received by: (Signature)	Relinquished by: (Signature)	Date/Time	Received by: (Signature)
Relinquished by: (Signature)	Date/Time	Received for Laboratory by: (Signature)	Date/Time	Remarks	

APR-23-97 08:57 AM ICF KAISER REMEDIATION 540 475 3161

ICF KAISER ENGINEERS

CHAIN OF CUSTODY RECORD

Nº 5015

PROJ. NO.	PROJECT NAME
72043	Morgantown Ordinance Works

SAMPLERS: (Signature) [signature]

STA. NO	DATE	TIME	COMP	GRAB	STATION LOCATION	NO OF CONTAINERS	Waste Characterization						REMARKS
	4/23/97	1500	X		MOW-PCB-WC	4	X						Containment of Cancer PCB
													Air Bill # to follow. UPS
													N094 261 9383
													Cooler # C000 431

Relinquished by (Signature)	Date/Time	Received by (Signature)	Relinquished by (Signature)	Date/Time	Received by (Signature)
[signature]	4/23/97 1830	UPS (Carrier)			
Relinquished by (Signature)	Date/Time	Received by (Signature)	Relinquished by (Signature)	Date/Time	Received by (Signature)
Relinquished by (Signature)	Date/Time	Received for Laboratory by: (Signature)	Date/Time	Remarks	

ICF KAISER ENGINEERS

CHAIN OF CUSTODY RECORD

№ 5004

PROJ. NO.	PROJECT NAME
66473	McKEANTOWN ORDNANCE

SAMPLERS: (Signature) [illegible]

STA. NO.	DATE	TIME	COMP	GRAB	STATION LOCATION	NO. OF CONTAINERS	Total Lead						REMARKS
	4/15/92	1530	X		MCW - 2 - 234	1	X						
		1545	X		MCW - 8 - 235		X						
		1548	X		MCW - 8 - 236		X						
		1549	X		MCW - 8 - 237	1	X						24 hr
		1555	X		MCW - 8 - 238	1	X						
		1557	X		MCW - 8 - 239		X						turn
		1600	X		MCW - 8 - 240	1	X						
		1605	X		MCW - 8 - 241	1	X						
		1610	X		MCW - 8B - 242	1	X						
		1620	X		MCW - 10 - 243	1	X						
		1625	X		MCW - 10 - 244	1	X						
		1630	X		MCW - 10 - 245	1	X						
		1635	X		MCW - 10 - 246	1	X						
		1640	X		MCW - 10 - 247	1	X						
		1645	X		MCW - 10 - 248	1	X						

Relinquished by: (Signature)	Date/Time	Received by: (Signature)	Relinquished by: (Signature)	Date/Time	Received by: (Signature)
[illegible]	4/15/92				
Relinquished by: (Signature)	Date/Time	Received by: (Signature)	Relinquished by: (Signature)	Date/Time	Received by: (Signature)
Relinquished by: (Signature)	Date/Time	Received for Laboratory by (Signature)	Date/Time	Remarks	

APR-15-91 08:59 AM ICF KAISER REMEDIATION 540 475 3161

ORIGINAL (Red)

ICF KAISER ENGINEERS

CHAIN OF CUSTODY RECORD

№ 5017

PROJ. NO.	PROJECT NAME
70043	Mountain Ordnance Works

SAMPLERS: (Signature) [signature]

2 DAY TURN AROUND

STA. NO	DATE	TIME	COMP	GRAB	STATION LOCATION	NO OF CONTAINERS	Pb (total)	Pb/Ni 8310	Hg				REMARKS
	4/24	1212	X		MOW-1-260	1	X						[illegible] (south)
		1225	X		MOW-[illegible]-261	1	X						[illegible]
		1247	X		MOW 8-262	1	X						[illegible] (west)
		1255	X		MOW-8-263	1	X						[illegible] (south)
		1310	X		~~[illegible]~~ MOW-6B-264	1		X					[illegible] 8 (Base)
		1350	X		MOW [illegible]-265	1 3	X	X	X				[illegible] No Blue Stain Area
		1410	X		MOW 3-266	1 3	X	X	X				[illegible] N Blue Stain Area
		1420	X		MOW-3-267	1 3	X	X	X				[illegible] N Blue Stain Area
		1440	X		MOW 3B-268	1 3	X	X	X				Base N Blue Stain Area
		1440	X		MOW-3B-268B	1 3	X	X	X				Base N Blue Stain Area
	4/24	1030			RB-13	3	X	X	X				Rinsate Blank

Relinquished by (Signature)	Date/Time	Received by (Signature)	Relinquished by (Signature)	Date/Time	Received by (Signature)
[signature]	[illegible]				
Relinquished by (Signature) [signature]	Date/Time 4/24/97 1655	Received by (Signature) FEDX (CARRIER)	Relinquished by (Signature)	Date/Time	Received by (Signature)
Relinquished by (Signature)	Date/Time	Received for Laboratory by (Signature)	Date/Time	Remarks FEDX C00428 Cooler # AIR Bill # 41474[illegible]	

8205 Distribution: Original Accompanies Shipment. Copy to Coordinator Field Files

ORIGINAL

Analysis Report

Lancaster Laboratories
A division of Thermo Analytical Inc.

LLI Sample No. SW 2695817
Collected: 4/16/97 at 17:45 by CC

Submitted: 4/18/97 Reported: 4/22/97
Discard: 4/30/97

MOW-11-252 Composite Soil Sample

Morgantown Ordnance Works - Morgantown, WV

Account No: 07867
ICF Kaiser Engineers, Inc.
Gateway View Plaza
1600 W. Carson St.
Pittsburgh PA 15219

P.O. 66473
Rel.

CAT NO.	ANALYSIS NAME	AS RECEIVED RESULTS	AS RECEIVED LIMIT OF QUANTITATION	UNITS	DRY WEIGHT RESULTS	DRY WEIGHT LIMIT OF QUANTITATION
0159	Mercury	5.6	1.0	mg/kg	6.3	1.1
1862	PAH's in Solids			See Page 2		
2111	Moisture	11.3	0.50	% by wt.		

"Moisture" represents the loss in weight of the sample after drying with an infrared lamp at 150 degrees Celsius.

1 COPY TO ICF Kaiser Engineers, Inc. ATTN: Mr. Doug Taylor

Questions? Contact your Client Services Representative
De Brooks at (717) 656-2300
13:32:22 D 0001 6 130462 561429
542 0.00 00029813 ASR000

Respectfully Submitted
Ramona V. Layman
Manager, Metals/Leachates

MEMBER ACIL

Lancaster Laboratories
A division of Thermo Analytical Inc.

LLI Sample No. SW 2695817
Collected: 4/16/97 at 17:45 by CC

Submitted: 4/18/97 Reported: 4/22/97
Discard: 4/30/97

MOW-11-252 Composite Soil Sample

Morgantown Ordnance Works - Morgantown, WV

Account No: 07867
ICF Kaiser Engineers, Inc.
Gateway View Plaza
1600 W. Carson St.
Pittsburgh PA 15219

P.O. 66473
Rel.

CAT NO.	ANALYSIS NAME	AS RECEIVED RESULTS	AS RECEIVED LIMIT OF QUANTITATION	UNITS	DRY WEIGHT RESULTS	DRY WEIGHT LIMIT OF QUANTITATION
PAH's in Solids						
3296	Naphthalene	< 6,700.	6,700.	ug/kg	< 7,600.	7,600.
3297	Acenaphthylene	< 6,700.	6,700.	ug/kg	< 7,600.	7,600.
3298	Acenaphthene	< 6,700.	6,700.	ug/kg	< 7,600.	7,600.
3299	Fluorene	< 6,700.	6,700.	ug/kg	< 7,600.	7,600.
3300	Phenanthrene	1,700.	1,700.	ug/kg	1,900.	1,900.
3301	Anthracene	< 1,700.	1,700.	ug/kg	< 1,900.	1,900.
3302	Fluoranthene	2,310.	670.	ug/kg	2,610.	760.
3303	Pyrene	2,550.	670.	ug/kg	2,880.	760.
3304	Benzo(a)anthracene	1,430.	30.	ug/kg	1,610.	34.
3305	Chrysene	1,300.	300.	ug/kg	1,520.	340.
3306	Benzo(b)fluoranthene	1,580.	67.	ug/kg	1,780.	76.
3307	Benzo(k)fluoranthene	1,070.	67.	ug/kg	1,210.	76.
3308	Benzo(a)pyrene	1,760.	67.	ug/kg	1,980.	76.
3309	Dibenzo(a,h)anthracene	< 140.	140.	ug/kg	< 160.	160.
3310	Benzo(g,h,i)perylene	3,400.	170.	ug/kg	3,840.	190.
3311	Indeno(1,2,3-cd)pyrene	1,890.	170.	ug/kg	2,130.	190.

Due to interfering peaks on the chromatogram, the values reported represent the lowest quantitation limits obtainable.

Questions? Contact your Client Services Representative
De Brooks at (717) 656-2300

Respectfully Submitted
Jenifer E. Hess, B.S.
Group Leader Pesticides/PCBs

Analysis Report

Lancaster Laboratories
A division of Thermo Analytical Inc.

LLI Sample No. SW 2695818
Collected: 4/16/97 at 17:50 by CC

Submitted: 4/18/97 Reported: 4/22/97
Discard: 4/30/97

MOW-11-253 Composite Soil Sample

Morgantown Ordnance Works - Morgantown, WV

Account No: 07867
ICF Kaiser Engineers, Inc.
Gateway View Plaza
1600 W. Carson St.
Pittsburgh PA 15219

P.O. 66473
Rel.

CAT NO.	ANALYSIS NAME	AS RECEIVED RESULTS	AS RECEIVED LIMIT OF QUANTITATION	UNITS	DRY WEIGHT RESULTS	DRY WEIGHT LIMIT OF QUANTITATION
0159	Mercury	1.87	0.50	mg/kg	2.12	0.57
1862	PAH's in Solids			See Page 2		
2111	Moisture	11.8	0.50	% by wt.		

"Moisture" represents the loss in weight of the sample after drying with an infrared lamp at 150 degrees Celsius.

1 COPY TO ICF Kaiser Engineers, Inc. ATTN: Mr. Doug Taylor

Questions? Contact your Client Services Representative
De Brooks at (717) 656-2300
13:32:48 D 0001 6 130462 561429
542 0.00 00029813 ASR000

Respectfully Submitted
Ramona V. Layman
Manager, Metals/Leachates

MEMBER ACIL
Lancaster Laboratories
2425 New Holland Pike
P.O. Box 12425
Lancaster, PA 17605-2425
Phone (717) 656-2300 Fax (717) 656-2681

See reverse side for explanation of symbols and abbreviations

Lancaster Laboratories
A division of Thermo Analytical Inc.

LLI Sample No. SW 2695818
Collected: 4/16/97 at 17:50 by CC

Submitted: 4/18/97 Reported: 4/22/97
Discard: 4/30/97

MOW-11-253 Composite Soil Sample

Morgantown Ordnance Works - Morgantown, WV

Account No: 07867
ICF Kaiser Engineers, Inc.
Gateway View Plaza
1600 W. Carson St.
Pittsburgh PA 15219

P.O. 66473
Rel.

CAT NO.	ANALYSIS NAME	AS RECEIVED RESULTS	AS RECEIVED LIMIT OF QUANTITATION	UNITS	DRY WEIGHT RESULTS	DRY WEIGHT LIMIT OF QUANTITATION
PAH's in Solids						
3296	Naphthalene	< 6,700.	6,700.	ug/kg	< 7,600.	7,600.
3297	Acenaphthylene	< 6,700.	6,700.	ug/kg	< 7,600.	7,600.
3298	Acenaphthene	< 6,700.	6,700.	ug/kg	< 7,600.	7,600.
3299	Fluorene	< 6,700.	6,700.	ug/kg	< 7,600.	7,600.
3300	Phenanthrene	2,700.	1,700.	ug/kg	3,100.	1,900.
3301	Anthracene	< 1,700.	1,700.	ug/kg	< 1,900.	1,900.
3302	Fluoranthene	3,120.	670.	ug/kg	3,540.	760.
3303	Pyrene	3,390.	670.	ug/kg	3,840.	760.
3304	Benzo(a)anthracene	1,580.	30.	ug/kg	1,790.	34.
3305	Chrysene	1,500.	300.	ug/kg	1,690.	340.
3306	Benzo(b)fluoranthene	1,760.	67.	ug/kg	1,990.	76.
3307	Benzo(k)fluoranthene	1,090.	67.	ug/kg	1,230.	76.
3308	Benzo(a)pyrene	2,360.	67.	ug/kg	2,670.	76.
3309	Dibenzo(a,h)anthracene	314.	67.	ug/kg	356.	76.
3310	Benzo(g,h,i)perylene	3,490.	170.	ug/kg	3,960.	190.
3311	Indeno(1,2,3-cd)pyrene	2,030.	170.	ug/kg	2,300.	190.

Due to interfering peaks on the chromatogram, the values reported represent the lowest quantitation limits obtainable.

Questions? Contact your Client Services Representative
De Brooks at (717) 656-2300

Respectfully Submitted
Jenifer E. Hess, B.S.
Group Leader Pesticides/PCBs

MEMBER ACIL

Analysis Report

Lancaster Laboratories
A division of Thermo Analytical Inc.

LLI Sample No. SW 2695819
Collected: 4/16/97 at 17:55 by CC

Submitted: 4/18/97 Reported: 4/22/97
Discard: 4/30/97

MOW-11-254 Composite Soil Sample

Morgantown Ordnance Works - Morgantown, WV

Account No: 07867
ICF Kaiser Engineers, Inc.
Gateway View Plaza
1600 W. Carson St.
Pittsburgh PA 15219

P.O. 66473
Rel.

CAT NO.	ANALYSIS NAME	AS RECEIVED RESULTS	AS RECEIVED LIMIT OF QUANTITATION	UNITS	DRY WEIGHT RESULTS	DRY WEIGHT LIMIT OF QUANTITATION
0159	Mercury	1.79	0.50	mg/kg	2.17	0.60
1862	PAH's in Solids			See Page 2		
2111	Moisture	17.7	0.50	% by wt.		

"Moisture" represents the loss in weight of the sample after drying with an infrared lamp at 150 degrees Celsius.

1 COPY TO ICF Kaiser Engineers, Inc. ATTN: Mr. Doug Taylor

Questions? Contact your Client Services Representative
De Brooks at (717) 656-2300
13:33:13 D 0001 6 130462 561429
542 0.00 00029813 ASR000

Respectfully Submitted
Ramona V. Layman
Manager, Metals/Leachates

MEMBER ACIL
Lancaster Laboratories
2425 Newport Road
PO Box 12425
Lancaster, PA 17605-2425
717-656-2300 Fax: 717-656-2681

See reverse side for explanation of symbols and abbreviations

Lancaster Laboratories
A division of Thermo Analytical Inc.

LLI Sample No. SW 2695819
Collected: 4/16/97 at 17:55 by CC

Submitted: 4/18/97 Reported: 4/22/97
Discard: 4/30/97

MOW-11-254 Composite Soil Sample

Morgantown Ordnance Works - Morgantown, WV

Account No: 07867
ICF Kaiser Engineers, Inc.
Gateway View Plaza
1600 W. Carson St.
Pittsburgh PA 15219

P.O. 66473
Rel.

CAT NO.	ANALYSIS NAME	AS RECEIVED RESULTS	AS RECEIVED LIMIT OF QUANTITATION	UNITS	DRY WEIGHT RESULTS	DRY WEIGHT LIMIT OF QUANTITATION
PAH's in Solids						
3296	Naphthalene	< 6,700.	6,700.	ug/kg	< 8,100.	8,100.
3297	Acenaphthylene	< 6,700.	6,700.	ug/kg	< 8,100.	8,100.
3298	Acenaphthene	< 6,700.	6,700.	ug/kg	< 8,100.	8,100.
3299	Fluorene	< 6,700.	6,700.	ug/kg	< 8,100.	8,100.
3300	Phenanthrene	< 1,700.	1,700.	ug/kg	< 2,000.	2,000.
3301	Anthracene	< 1,700.	1,700.	ug/kg	< 2,000.	2,000.
3302	Fluoranthene	1,920.	670.	ug/kg	2,330.	810.
3303	Pyrene	2,370.	670.	ug/kg	2,880.	810.
3304	Benzo(a)anthracene	1,400.	30.	ug/kg	1,700.	36.
3305	Chrysene	1,200.	300.	ug/kg	1,440.	360.
3306	Benzo(b)fluoranthene	1,520.	67.	ug/kg	1,850.	81.
3307	Benzo(k)fluoranthene	1,050.	67.	ug/kg	1,270.	81.
3308	Benzo(a)pyrene	2,900.	67.	ug/kg	3,520.	81.
3309	Dibenzo(a,h)anthracene	314.	67.	ug/kg	382.	81.
3310	Benzo(g,h,i)perylene	3,840.	170.	ug/kg	4,670.	200.
3311	Indeno(1,2,3-cd)pyrene	2,210.	170.	ug/kg	2,680.	200.

Due to interfering peaks on the chromatogram, the values reported represent the lowest quantitation limits obtainable.

Questions? Contact your Client Services Representative
De Brooks at (717) 656-2300

Respectfully Submitted
Jenifer E. Hess, B.S.
Group Leader Pesticides/PCBs

MEMBER ACIL

Analysis Report

Lancaster Laboratories
A division of Thermo Analytical Inc.

(Red)

LLI Sample No. SW 2695820
Collected: 4/16/97 at 18:00 by CC

Submitted: 4/18/97 Reported: 4/22/97
Discard: 4/30/97

MOW-11-255 Composite Soil Sample

Morgantown Ordnance Works - Morgantown, WV

Account No: 07867
ICF Kaiser Engineers, Inc.
Gateway View Plaza
1600 W. Carson St.
Pittsburgh PA 15219

P.O. 66473
Rel.

CAT NO.	ANALYSIS NAME	AS RECEIVED RESULTS	AS RECEIVED LIMIT OF QUANTITATION	UNITS	DRY WEIGHT RESULTS	DRY WEIGHT LIMIT OF QUANTITATION
0159	Mercury	4.3	1.0	mg/kg	5.0	1.2
1862	PAH's in Solids			See Page 2		
2111	Moisture	14.1	0.50	% by wt.		

"Moisture" represents the loss in weight of the sample after drying with an infrared lamp at 150 degrees Celsius.

1 COPY TO ICF Kaiser Engineers, Inc. ATTN: Mr. Doug Taylor

Questions? Contact your Client Services Representative
De Brooks at (717) 656-2300
13:33:50 D 0001 6 130462 561429
542 0.00 00029813 ASR000

Respectfully Submitted
Ramona V. Layman
Manager, Metals/Leachates

MEMBER ACIL
Lancaster Laboratories
2425 New Holland Pike
P.O. Box 12425
Lancaster, PA 17605-2425
717-656-2300 Fax 717-656-2681

See reverse side for explanation of symbols and abbreviations

Lancaster Laboratories
A division of Thermo Analytical Inc.

LLI Sample No. SW 2695820
Collected: 4/16/97 at 18:00 by CC

Submitted: 4/18/97 Reported: 4/22/97
Discard: 4/30/97

MOW-11-255 Composite Soil Sample

Morgantown Ordnance Works - Morgantown, WV

Account No: 07867
ICF Kaiser Engineers, Inc.
Gateway View Plaza
1600 W. Carson St.
Pittsburgh PA 15219

P.O. 66473
Rel.

CAT NO.	ANALYSIS NAME	AS RECEIVED RESULTS	AS RECEIVED LIMIT OF QUANTITATION	UNITS	DRY WEIGHT RESULTS	DRY WEIGHT LIMIT OF QUANTITATION
PAH's in Solids						
3296	Naphthalene	< 6,700.	6,700.	ug/kg	< 7,800.	7,800.
3297	Acenaphthylene	< 6,700.	6,700.	ug/kg	< 7,800.	7,800.
3298	Acenaphthene	< 6,700.	6,700.	ug/kg	< 7,800.	7,800.
3299	Fluorene	< 6,700.	6,700.	ug/kg	< 7,800.	7,800.
3300	Phenanthrene	2,200.	1,700.	ug/kg	2,600.	1,900.
3301	Anthracene	< 1,700.	1,700.	ug/kg	< 1,900.	1,900.
3302	Fluoranthene	3,010.	670.	ug/kg	3,500.	780.
3303	Pyrene	< 1,700.	1,700.	ug/kg	< 2,000.	2,000.
3304	Benzo(a)anthracene	2,270.	30.	ug/kg	2,640.	35.
3305	Chrysene	2,000.	300.	ug/kg	2,310.	350.
3306	Benzo(b)fluoranthene	2,640.	67.	ug/kg	3,070.	78.
3307	Benzo(k)fluoranthene	1,780.	67.	ug/kg	2,070.	78.
3308	Benzo(a)pyrene	5,210.	67.	ug/kg	6,070.	78.
3309	Dibenzo(a,h)anthracene	462.	67.	ug/kg	538.	78.
3310	Benzo(g,h,i)perylene	6,480.	170.	ug/kg	7,540.	190.
3311	Indeno(1,2,3-cd)pyrene	3,630.	170.	ug/kg	4,230.	190.

Due to interfering peaks on the chromatogram, the values reported represent the lowest quantitation limits obtainable.

Questions? Contact your Client Services Representative
De Brooks at (717) 656-2300

Respectfully Submitted
Jenifer E. Hess, B.S.
Group Leader Pesticides/PCBs

Analysis Report

Lancaster Laboratories
A division of Thermo Analytical Inc.

LLI Sample No. SW 2695821
Collected: 4/16/97 at 18:05 by CC

Submitted: 4/18/97 Reported: 4/22/97
Discard: 4/30/97

MOW-11-256 Composite Soil Sample

Morgantown Ordnance Works - Morgantown, WV

Account No: 07867
ICF Kaiser Engineers, Inc.
Gateway View Plaza
1600 W. Carson St.
Pittsburgh PA 15219

P.O. 66473
Rel.

CAT NO.	ANALYSIS NAME	AS RECEIVED RESULTS	AS RECEIVED LIMIT OF QUANTITATION	UNITS	DRY WEIGHT RESULTS	DRY WEIGHT LIMIT OF QUANTITATION
0159	Mercury	0.169	0.100	mg/kg	0.19	0.11
1862	PAH's in Solids			See Page 2		
2111	Moisture	9.40	0.50	% by wt.		

"Moisture" represents the loss in weight of the sample after drying with an infrared lamp at 150 degrees Celsius.

1 COPY TO ICF Kaiser Engineers, Inc. ATTN: Mr. Doug Taylor

Questions? Contact your Client Services Representative
De Brooks at (717) 656-2300
13:34:14 D 0001 6 130462 561429
542 0.00 00029813 ASR000

Respectfully Submitted
Ramona V. Layman
Manager, Metals/Leachates

MEMBER ACIL
Lancaster Laboratories
2425 New Holland Pike
PO Box 12425
Lancaster PA 17605-2425
Phone 717-656-2300 Fax 717-656-2681

See reverse side for explanation of symbols and abbreviations.

Analysis Report

ORIGINAL (Red)

Lancaster Laboratories
A division of Thermo Analytical Inc.

LLI Sample No. SW 2695821
Collected: 4/16/97 at 18:05 by CC

Submitted: 4/18/97 Reported: 4/22/97
Discard: 4/30/97

MOW-11-256 Composite Soil Sample

Morgantown Ordnance Works - Morgantown, WV

Account No: 07867
ICF Kaiser Engineers, Inc.
Gateway View Plaza
1600 W. Carson St.
Pittsburgh PA 15219

P.O. 66473
Rel.

CAT NO.	ANALYSIS NAME	AS RECEIVED RESULTS	AS RECEIVED LIMIT OF QUANTITATION	UNITS	DRY WEIGHT RESULTS	DRY WEIGHT LIMIT OF QUANTITATION
PAH's in Solids						
3296	Naphthalene	< 670.	670.	ug/kg	< 740.	740.
3297	Acenaphthylene	< 670.	670.	ug/kg	< 740.	740.
3298	Acenaphthene	< 670.	670.	ug/kg	< 740.	740.
3299	Fluorene	< 670.	670.	ug/kg	< 740.	740.
3300	Phenanthrene	< 170.	170.	ug/kg	< 180.	180.
3301	Anthracene	< 170.	170.	ug/kg	< 180.	180.
3302	Fluoranthene	< 67.	67.	ug/kg	< 74.	74.
3303	Pyrene	< 67.	67.	ug/kg	< 74.	74.
3304	Benzo(a)anthracene	45.	3.	ug/kg	49.7	3.3
3305	Chrysene	40.	30.	ug/kg	47.	33.
3306	Benzo(b)fluoranthene	56.3	6.7	ug/kg	62.2	7.4
3307	Benzo(k)fluoranthene	36.3	6.7	ug/kg	40.0	7.4
3308	Benzo(a)pyrene	57.9	6.7	ug/kg	63.9	7.4
3309	Dibenzo(a,h)anthracene	< 6.7	6.7	ug/kg	< 7.4	7.4
3310	Benzo(g,h,i)perylene	116.	17.	ug/kg	128.	18.
3311	Indeno(1,2,3-cd)pyrene	64.	17.	ug/kg	71.	18.

Questions? Contact your Client Services Representative
De Brooks at (717) 656-2300

Respectfully Submitted
Jenifer E. Hess, B.S.
Group Leader Pesticides/PCBs

Analysis Report

Lancaster Laboratories
A division of Thermo Analytical Inc.

LLI Sample No. SW 2696548
Collected: 4/18/97 by CH

Submitted: 4/19/97 Reported: 4/22/97
Discard: 5/ 7/97

MOW-2-257 Composite Soil Sample
Project# 7004350000
Morgantown Ordinance Works

Account No: 07867
ICF Kaiser Engineers, Inc.
Gateway View Plaza
1600 W. Carson St.
Pittsburgh PA 15219

P.O. 7004350000
Rel.

CAT NO.	ANALYSIS NAME	AS RECEIVED RESULTS	AS RECEIVED LIMIT OF QUANTITATION	UNITS	DRY WEIGHT RESULTS	DRY WEIGHT LIMIT OF QUANTITATION
0155	Lead	1,870.	99.	mg/kg	2,540.	130.
2111	Moisture	26.4	0.50	% by wt.		

"Moisture" represents the loss in weight of the sample after drying with an infrared lamp at 150 degrees Celsius.

1 COPY TO ICF Kaiser Engineers, Inc. ATTN: Mr. Doug Taylor

Questions? Contact your Client Services Representative
De Brooks at (717) 656-2300
13:35:00 D 0001 3 130462 561600
320 0.00 00009956 ASR000

Respectfully Submitted
Ramona V. Layman
Manager, Metals/Leachates

Lancaster Laboratories
2425 New Holland Pike
P.O. Box 12425
Lancaster PA 17605-2425
717-656-2300 Fax 717-656-2681

MEMBER ACIL

See reverse side for explanation of symbols and abbreviations

Analysis Report

Lancaster Laboratories
A division of Thermo Analytical Inc.

ORIGINAL
(Red)

LLI Sample No. SW 2696549
Collected: 4/18/97 by CH

Submitted: 4/19/97 Reported: 4/22/97
Discard: 5/ 7/97

MOW-2-258 Composite Soil Sample
Project# 7004350000
Morgantown Ordinance Works

Account No: 07867
ICF Kaiser Engineers, Inc.
Gateway View Plaza
1600 W. Carson St.
Pittsburgh PA 15219

P.O. 7004350000
Rel.

CAT NO.	ANALYSIS NAME	AS RECEIVED RESULTS	AS RECEIVED LIMIT OF QUANTITATION	UNITS	DRY WEIGHT RESULTS	DRY WEIGHT LIMIT OF QUANTITATION
0155	Lead	2,440.	99.	mg/kg	3,330.	140.
2111	Moisture	26.7	0.50	% by wt.		

"Moisture" represents the loss in weight of the sample after drying with an infrared lamp at 150 degrees Celsius.

1 COPY TO ICF Kaiser Engineers, Inc. ATTN: Mr. Doug Taylor

Questions? Contact your Client Services Representative
De Brooks at (717) 656-2300
13:35:17 D 0001 3 130462 561600
320 0.00 00005776 ASR000

Respectfully Submitted
Ramona V. Layman
Manager, Metals/Leachates

MEMBER ACIL

Lancaster Laboratories
2425 New Holland Pike
PO Box 12425
Lancaster, PA 17605-2425
[illegible]

See reverse side for explanation of symbols and abbreviations

2216 Rev. 5/01/96

Analysis Report

Lancaster Laboratories
A division of Thermo Analytical Inc.

LLI Sample No. SW 2696550
Collected: 4/18/97 by CH

Submitted: 4/19/97 Reported: 4/22/97
Discard: 5/ 7/97

MOW-2-259 Composite Soil Sample
Project# 7004350000
Morgantown Ordinance Works

Account No: 07867
ICF Kaiser Engineers, Inc.
Gateway View Plaza
1600 W. Carson St.
Pittsburgh PA 15219

P.O. 7004350000
Rel.

CAT NO.	ANALYSIS NAME	AS RECEIVED RESULTS	AS RECEIVED LIMIT OF QUANTITATION	AS RECEIVED UNITS	DRY WEIGHT RESULTS	DRY WEIGHT LIMIT OF QUANTITATION
0155	Lead	305.	9.7	mg/kg	382.	12.
2111	Moisture	20.0	0.50	% by wt.		

"Moisture" represents the loss in weight of the sample after drying with an infrared lamp at 150 degrees Celsius.

1 COPY TO ICF Kaiser Engineers, Inc. ATTN: Mr. Doug Taylor

Questions? Contact your Client Services Representative
De Brooks at (717) 656-2300
13:35:30 D 0001 3 130462 561600
320 0.00 00005776 ASR000

Respectfully Submitted
Ramona V. Layman
Manager, Metals/Leachates

ATTACHMENT C

ORIGINAL
(Red)

ATTACHMENT C

REVISED PROCEDURE FOR REMOVAL OF SEDIMENT/DEBRIS MAIN PROCESS BUILDING - CRANE ALLEY

1. Construct barrier between the PCB contaminated side and non-PCB contaminated side of the Crane Alley sump/trench using a cement/bentonite mixture. Allow the seal 24 hours to cure.

2. Clear and grub the Crane Alley using chain saws and a chipper. The trees and vines will be run through the chipper outside Crane Alley.

3. Remove soil from the Crane Alley using skidloader. The material will be staged on the northern end of the Crane Alley. The soil will be removed from the Crane Alley using the excavator and staged prior to disposal.

4. Mobilize small excavator onto the Site and lower into the Crane Alley using the large excavator.

5. Saw cut the walkway between the two Main Process Buildings. This will need approval from John Snider, of the MIPA. Secure the walkway with the small excavator. Cut the steel support beams and bracing of the walkway using an acetylene/oxygen torch. Lower the walkway to the floor of the crane alley and transport the walkway to the northern end of the Crane Alley. Using the large excavator, remove the walkway from the Crane alley and place into a dump trailer for transport and disposal to the appropriate disposal facility.

NOTE: THE SUMP/TRENCH IS DIVIDED INTO TWO AREAS, THE NON-PCB CONTAMINATED SIDE AND THE PCB CONTAMINATED SIDE.

NON-PCB CONTAMINATED SEDIMENT SIDE

6. Use the small excavator to pull out the piping and steel debris from the sump/trench and lay the debris on the previously cleaned concrete Crane Alley floor. Wash the debris using a power washer. Relocate the debris to the northern end of the Crane Alley and remove the debris from the Crane Alley using the large excavator. The debris will be placed into a scrap bin or placed into a container for offsite disposal.

7. The water and sediment that accumulates into the sump/trench from the decontaminating of the steel debris will be allowed to settle and the water pumped through the filter system into the Modular Tank. The water will be sampled and discharged through the temporary NPDES.

8. After the water is pumped out the remaining debris/sediment will be stabilized by mixing with kiln dust directly in the sump/trench. The stabilized material will then be vacuumed and off-loaded into a rolloff.

ORIGINAL
(Red)

PCB CONTAMINATED SEDIMENT SIDE

9. Use the small excavator to pull out the piping and steel debris from the sump/trench and stage on 6-mil polyethylene plastic over the previously cleaned concrete Crane Alley floor. Wash the debris using a steam cleaner. The debris will be placed into a container for offsite disposal.

10. The water and sediment that accumulates into the sump/trench from the decontaminating of the steel debris will be allowed to settle and the water pumped through the filter system into the Modular Tank. The water will be sampled and discharged through the temporary NPDES.

11. After the water is pumped out the remaining debris/sediment will be stabilized by mixing with kiln dust directly in the sump/trench. The stabilized material will then be vacuumed and off-loaded into a rolloff.

ORIGINAL
(Red)

ATTACHMENT D

Northern End of Crane Alley Looking at the Steel Debris Pulled from the Sump/Trench.

ORIGINAL
(Red)

Northern End of Crane Alley Looking at the Steel Debris Pulled from the Sump/Trench.

ICF KAISER

ICF KAISER ENGINEERS GROUP

ICF Kaiser Engineers, Inc.
Gateway View Plaza
1600 West Carson Street
Pittsburgh, PA 15219-1031
412/497-2000 Fax 412/497-2212

May 9, 1997

Ms. Melissa Whittington, RPM
General Remedial Section
USEPA Region III, 3HW23
841 Chestnut Building
Philadelphia, PA 19107

Subject: **Response Action at Morgantown Ordnance Works OU-2, Morgantown, WV**
Bi-Weekly Progress Report for the Period April 28 to May 9, 1997

Dear Ms. Whittington:

At the request of the Morgantown PRP Committee ICF Kaiser Engineers, Inc. is submitting the Bi-Weekly Progress report for the above referenced reporting period. This report is being submitted in accordance with the requirements of Section 8.7, of the Administrative Order on Consent for Removal Response Action, Docket No. III-96-68 (the Removal Order). A summary of the work anticipated for the next bi-weekly report is also attached.

Please call me or the Committee (contacts listed below) if you have any questions regarding this report.

Morgantown PRP Committee Contacts

Linda White U.S. Army Corps of Engineers (402) 221-7672	Steve Morrow Olin Corporation (423) 336-4511

Sincerely,

Charles Haefner, Jr./ccc

Charles Haefner, Jr., P.G.
Remediation Project Manager

cc: Steve Morrow, Olin
John Burns, Olin
Roger Towe, EPES
Michael Stratton, WVA DEP
Linda White, USACOE
Michael Crain, USACOE
Ken Cooper - USACOE
Doug Taylor, ICF Kaiser
OU-1 PRP Group

66473-158-G

BI-WEEKLY REPORT
APRIL 28, 1997 TO MAY 9, 1997

OU-2 RESPONSE ACTION
MORGANTOWN ORDNANCE WORKS
MORGANTOWN, WV

A. WORK PERFORMED APRIL 28 TO MAY 9, 1997

- The Committee completed Phase I excavation of soil around the former Coke Oven foundations (Zones A-F).
- The Committee collected confirmation soil samples from the soil excavation of Zones A-G. Samples were analyzed for total lead and PAHs by Lancaster Laboratories, Lancaster, PA.
- The Committee transported approximately 1,650 tons of soil from Zones A through G to the OU-1 Landfill.
- The Committee collected discharge water samples from the Modular Tanks containing water pumped out of the Crane Alley Sump/Trench and Pump Pit and the Coke Oven/Coke By-Products pits and sumps. Water samples were obtained when approximately 50,000 gallons were pumped into the Modular Tanks and at the conclusion of pumping. Samples were analyzed for TOC, COD, phenols, oil and grease, benzene, Fe, Pb, Mn, Cu, Zn, Hg and Al, PAHs, PCBs, CN,.pH, TSS, flourene, chlorides and ammonia-nitrogen.
- The Committee transported approximately 1,250 tons of soil from the excavations at the Main Process Area and the Blue Stained Areas for disposal at Chem Waste Management's Model City, NY Facility.
- The Committee discharged approximately 150,000 gallons to the Monongahela River through the temporary NPDES.
- The Committee completed removal of all soil and debris from the floor of the Crane Alley.
- The Committee completed removal of water, sediments, and debris from the Pump Pit and eastern sumps (Nos. 1, 2, 3A, 3B, 5, 6, 7, and 10).
- The Committee completed the backfilling of eastern sumps (Nos. 1, 2, 3A, 3B, 5, 6, 7, and 10).
- The Committee initiated sealing of the Coke Oven Utility Corridors.

B. WORK TO BE PERFORMED MAY 12 TO MAY 23, 1997

- The Committee will continue pumping water from the Crane Alley Sump/Trench.

- The Committee will begin removing metal debris/sediment from the Crane Alley Sump/Trench.

- The Committee will continue removing the water and sediments from the Quench Tower and Western Sumps located in the Coke Oven/Coke By-Products Area.

- The Committee will begin to pump water from the Quench Tower sump, the western sumps, and the sumps around the Coke Oven Gas Holder foundation.

- The Committee will backfill the Quench Tower and Western Sumps located in the Coke Oven/Coke By-Products Area.

- The Committee will complete sealing the Utility Corridors, with the exception of the southern corridor opening.

- The Committee will continue to discharge water from the Modular Tanks into the Monongahela River through the NPDES.

C. SUMMARY OF CONCERNS AND THEIR IMPACT ON RESPONSE ACTION ACTIVITIES.

- While vacuuming soil from the concrete lined floor of the M-SED-2 area, finely divided droplets of mercury were observed in concrete-lined recessed box drains. (Attachment A summarizes all activities.)

- The Committee will remove the metal debris found within the Crane Alley Sump/Trench in accordance with the procedures outlined in Attachment B.

D. ANALYTICAL DATA RECEIVED

- Soil confirmation sample results were obtained from the over excavation of soil hot spots located in the Main Process Building Area. Samples were obtained from hot spot M-SED-1, M-SS-4, and M-SS-8. Refer to Figures 3-4, 3-6, and 3-7 in Attachment C.

- Soil confirmation sample results were obtained from the Northern Blue Stained Material Area. Results are shown on Figure 3-10 in Attachment C.

- Soil confirmation sample results were obtained from the base of hot spot C-SS-8 (Zone G). The results are shown on Figure 3-18 in Attachment C.

- Water samples were obtained from the Modular Tanks. Analytical sample results are included in Attachment C.

E. MODIFICATIONS TO RESPONSE ACTION PLAN

None

MORGANTOWN ORDNANCE WORKS
TENTATIVE PROJECT SCHEDULE

Original Duration	Rem Dur	Activity ID	Early Start	Early Finish	Actual Duration	
1d	0	980	17MAR97 A	17MAR97 A	1d	USEPA Notification
7d	0	1000	31MAR97 A	14APR97 A	11d	Mobilization and Preparation (6)
23d *	7d *	1010	15APR97 A	15MAY97	16d	Crane Alley
3d	0	1011	15APR97 A	07MAY97	16d	Water Removal (4)
1d	1d	1015	08MAY97	08MAY97	0	Sump Cleanup (5)
4d	4d	1018	09MAY97	14MAY97	0	Confirmational Sampling (2)
2d	0	1022	18APR97 A	18APR97 A	1d	Equipment Mobilization (4)
3d	0	1024	22APR97 A	29APR97 A	6d	Clearing and Grubbing (4)
4d	4d	1026	08MAY97	13MAY97	0	Power Washing/Super Sucking (4)
2d	2d	1028	14MAY97	15MAY97	0	Confirmational Sampling (2)
21d *	0 *	1030	08APR97 A	06MAY97 A	21d	Soil Hot Spots
5d	0	1032	08APR97 A	11APR97 A	4d	Excavation (2)
2d	0 *	1034	28APR97 A	28APR97 A	1d	Confirmational Sampling/Analysis (2)
3d	0	1036	05MAY97 A	06MAY97 A	2d	Backfill/Final Cover (2)
45d *	29d *	1050	15APR97 A	17JUN97	16d	Coke and Coke By-Products Area
6d	6d	1060	09MAY97	16MAY97	0	Sump/Pit Water Removal (2)
4d	0	1070	29APR97 A	02MAY97 A	4d	Excavation of Soil Along Battery (1)
3d	3d	1090	07MAY97	09MAY97	0	Utility Corridor-Water Removal (2)
6d	6d	1092	12MAY97	19MAY97	0	Utility Corridor-Construction of Seal (4)
4d	0	1100	30APR97 A	07MAY97	5d	Sump/Pit Sediment Removal (2)
3d	0	1110	07MAY97 A	07MAY97 A	1d	Utility Corridor Debris Removal (2)
4d	0	1120	15APR97 A	17APR97 A	3d	Blue Stained Area Removal (2)
2d	0	1130	18APR97 A	18APR97 A	1d	Confirmatory Sampling (2)
6d	6d	1140	19MAY97	27MAY97	0	Backfill Sump/Pits (4)
4d	0	1160	16APR97 A	16APR97 A	1d	Excavation at C-SS-8 (1)
15d	0	1170	02MAY97 A	07MAY97 A	4d	T and D Haz./Non-Haz. Waste (-)
29d	29d	1180	07MAY97	17JUN97	0	Waste Profiling (-)
7d	7d	1190	18JUN97	26JUN97	0	Demobilization (5)

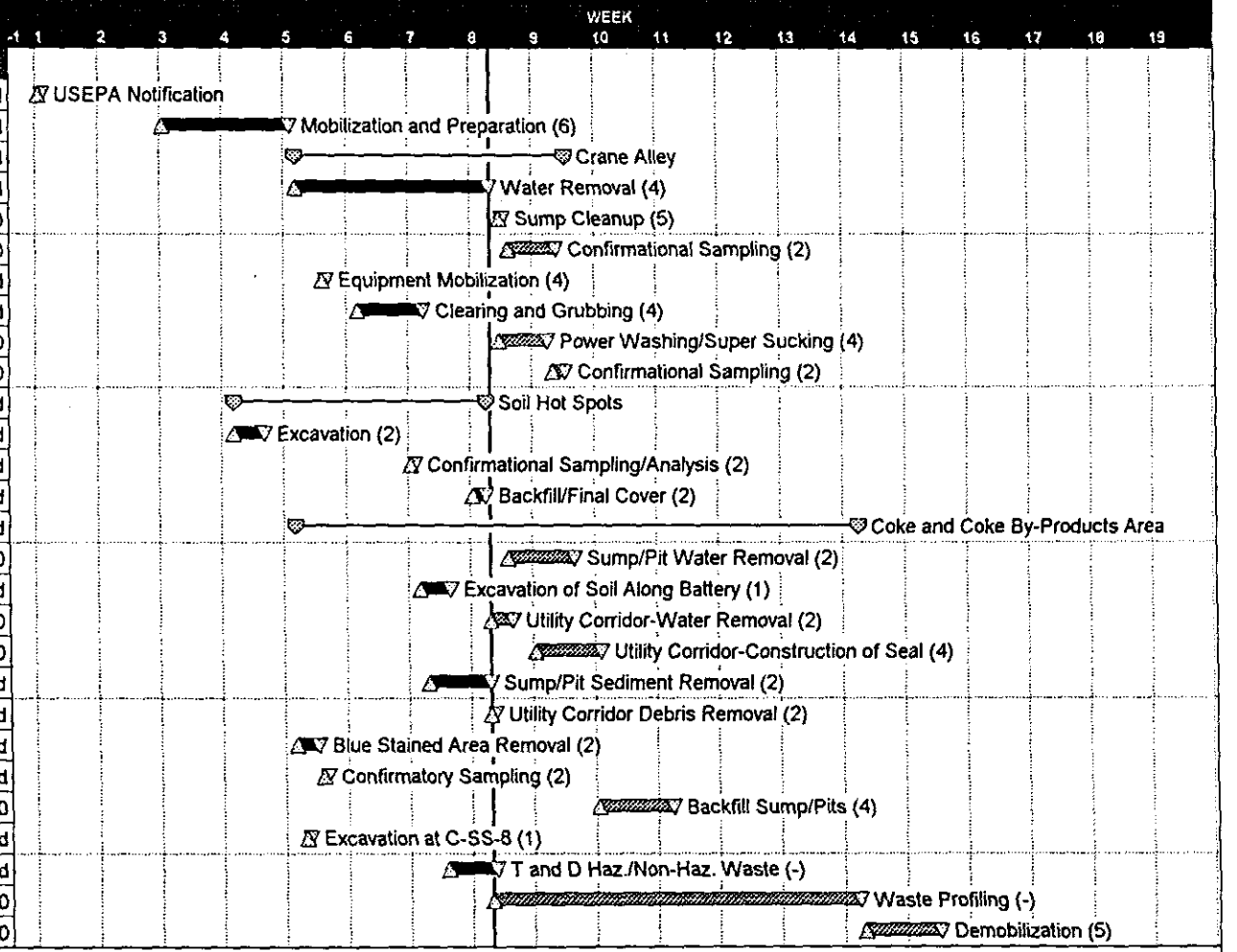

(6) = Number of Technicians per Task

D:STWIN:PROJ:MORG3AU2:may7:97

FIGURE 7-1

Run date	09MAY97
Project name	MORG3AU2

© Primavera Systems, Inc.

ORIGINAL
(Red)

ATTACHMENT A

ATTACHMENT A

MEMORANDUM

DATE: May 2, 1997

TO: Melissa Whittington/USEPA

FROM: Charles E. Haefner/ICF Kaiser Remediation

SUBJECT: Free Mercury, M-SED-2 Area

JOB NO.: 70043-500-00

On April 24, 1997 during the vacuuming of soil from the concrete-lined floor of the M-SED-2 soil hot spot area, located in the Main Process Building Area, finely divided droplets of mercury were observed. The finely divided droplets of mercury were not observed in the soil being removed, but were observed in concrete lined recessed box drains. The M-SED-2 soil hot spot area is bounded by a ten foot high retaining wall and the Main Process Building. The removal of soil was halted and the USEPA (Melissa Whittington) and the Morgantown Technical Committee (MTC) (Steve Morrow) were notified. Ms. Whittington visited the Morgantown Ordnance Works (MOW) project site on Wednesday, April 30, 1997. In addition, Mike Crain (USACOE) representing the MTC was also present.

When discussing the issue, the MTC proposed to remove the finely divided droplets of mercury from the recessed box drains and seal the drain and recessed boxes with concrete to prevent further exposure to the environment. Any soil material removed as part of the vacuuming process would be sampled for total mercury concentration prior to disposal, and transported to the approved waste disposal facility, Chem Waste Management, Model City, NY. Ms. Whittington (USEPA) agreed that the MTC was taking the appropriate action.

The MTC proposed to document the mercury removal procedure via a memo to Ms. Whittington. This memo serves that purpose.

ATTACHMENT B

ATTACHMENT B

REVISED PROCEDURE FOR REMOVAL OF SEDIMENT/DEBRIS MAIN PROCESS BUILDING - CRANE ALLEY

1. Construct barrier between the PCB contaminated side and non-PCB contaminated side of the Crane Alley sump/trench using a cement/bentonite mixture. Allow the seal 24 hours to cure.

2. Clear and grub the Crane Alley using chain saws and a chipper. The trees and vines will be run through the chipper outside Crane Alley.

3. Remove soil from the Crane Alley using skidloader. The material will be staged on the northern end of the Crane Alley. The soil will be removed from the Crane Alley using the excavator and staged prior to disposal.

4. Mobilize small excavator onto the Site and lower into the Crane Alley using the large excavator.

5. Saw cut the walkway between the two Main Process Buildings. Secure the walkway with the small excavator. Cut the steel support beams and bracing of the walkway. Lower the walkway to the floor of the Crane Alley. Locate the walkway so as to not interfere with the sediment/debris removal activities in the Crane Alley. Should the walkway not be able to be removed in one piece, the steel bracing will be set aside for reuse and the concrete material will be removed from the Crane Alley for transport and disposal to the appropriate disposal facility.

NOTE: THE SUMP/TRENCH IS DIVIDED INTO TWO AREAS, THE NON-PCB CONTAMINATED SIDE AND THE PCB CONTAMINATED SIDE.

NON-PCB CONTAMINATED SEDIMENT SIDE

6. Use the small excavator to pull out the piping and steel debris from the sump/trench and lay the debris on the previously cleaned concrete Crane Alley floor. Wash the debris using a power washer. Relocate the debris to the northern end of the Crane Alley and remove the debris from the Crane Alley using the large excavator. The debris will be placed into a scrap bin or placed into a container for offsite disposal.

7. The water and sediment that accumulates into the sump/trench from the decontaminating of the steel debris will be allowed to settle within the sump/trench only. Preventative measures will be taken to eliminate the movement of sediment to the pump pit. The accumulated water will be pumped through the filter system into the Modular Tank. The water will be sampled and discharged through the temporary NPDES.

8. After the water is pumped out the remaining debris/sediment will be stabilized by mixing with kiln dust directly in the sump/trench. The stabilized material will then be vacuumed and off-loaded into a rolloff.

ATTACHMENT B
(Continued)

PCB CONTAMINATED SEDIMENT SIDE

9. Use the small excavator to pull out the piping and steel debris from the sump/trench and stage on 6-mil polyethylene plastic over the previously cleaned concrete Crane Alley floor. Wash the debris using a steam cleaner. The debris will be placed into a container for offsite disposal.

10. The water and sediment that accumulates into the sump/trench from the decontaminating of the steel debris will be allowed to settle within the southern portion of the sump/trench. Preventative measures will be taken to eliminate the movement of sediment from the PCB contaminated side to the non-PCB contaminated side. The accumulated water will be pumped through the filter system into the Modular Tank. The water will be sampled and discharged through the temporary NPDES.

11. After the water is pumped out the remaining debris/sediment will be stabilized by mixing with kiln dust directly in the sump/trench. The stabilized material will then be vacuumed and off-loaded into a rolloff.

ATTACHMENT C

JOB NO.: 6647300900 PLOT SCALE: 1=1

STARTED ON: 11/15/96 REVISED: 5/8/97

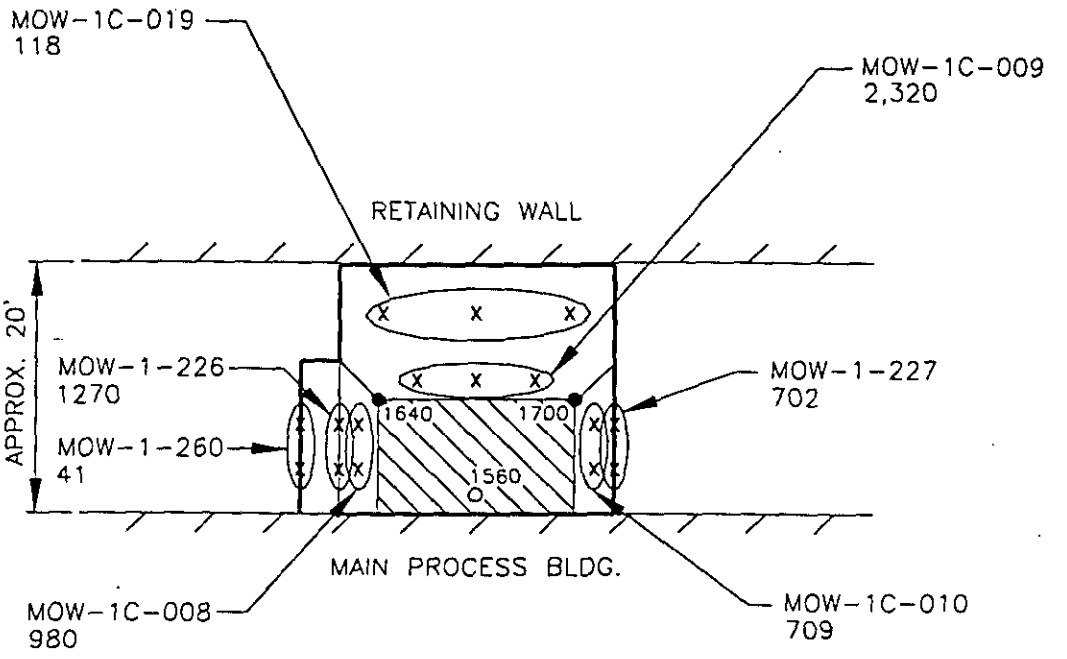

M-SED-1 HOT SPOT

BASE:

MOW-1B-228
69

MOW-1B-228D
14
(FIELD DUPLICATE)

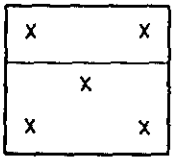

LEGEND:

o RI SAMPLE LOCATION

● PRE-REMOVAL SAMPLE LOCATION

x GRAB SAMPLE LOCATION

▨ ORIGINAL 10' X 5' HOT SPOT

MOW-1C-008 PHASE II COMPOSITE SAMPLE LOCATIONS
2320 TOTAL LEAD DRY WEIGHT CONCENTRATION (mg/kg)

FIGURE 3-4

MORGANTOWN TECHNICAL COMMITTEE MORGANTOWN, WEST VIRGINIA	CONFIRMATORY SAMPLING MAIN PROCESS BUILDING AREA	
ICF KAISER ENGINEERS PITTSBURGH, PA	DATE: 11/15/96	DR.: B. SNYDER
	SCALE: N.T.S.	FILE NAME: 40152046

JOB NO.: 6647300900 PLOT SCALE: 1=1

STARTED ON: 11/15/96 REVISED: 5/8/97

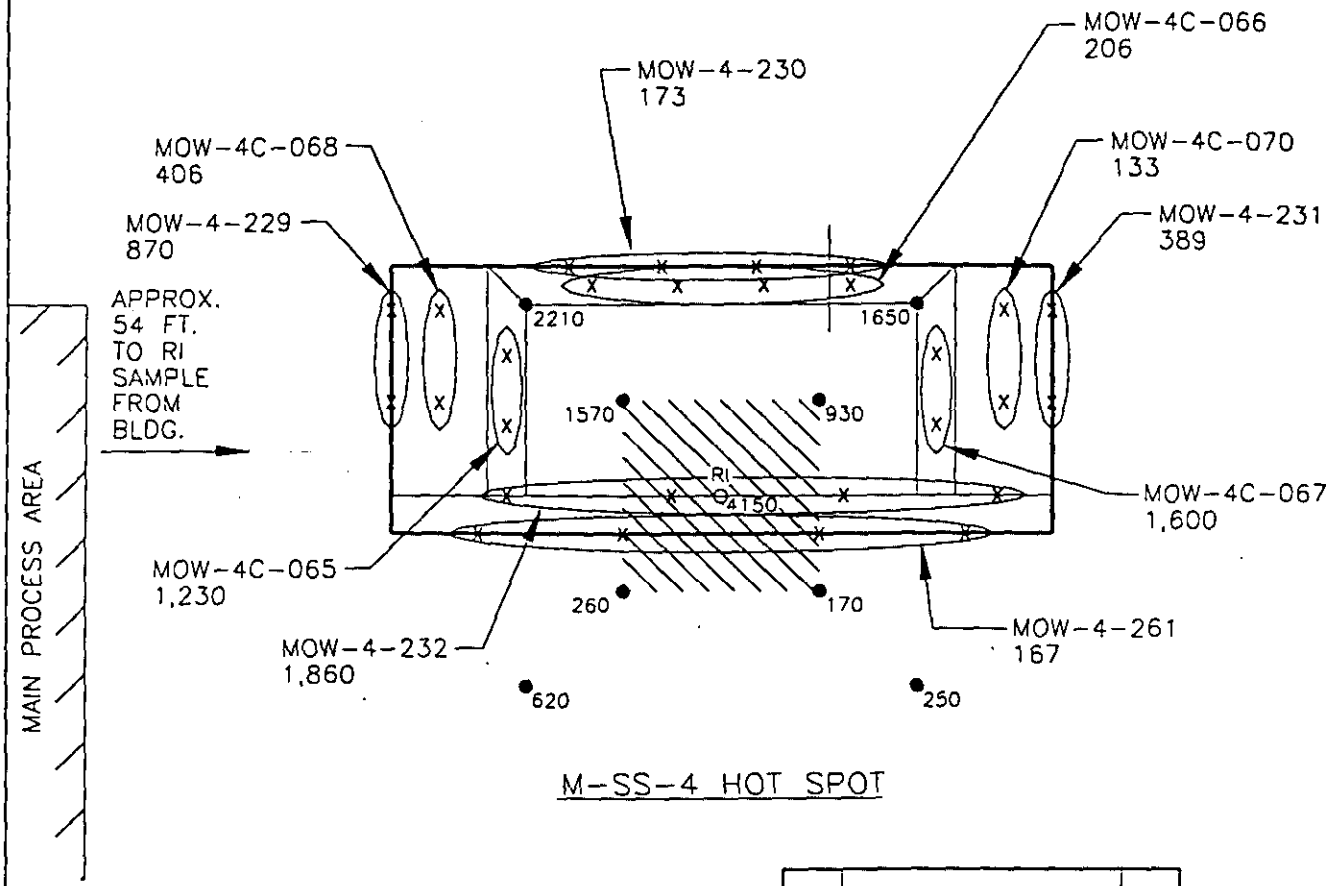

M-SS-4 HOT SPOT

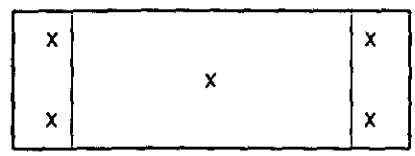

BASE:
MOW-4B-233
41

LEGEND:

- o RI SAMPLE LOCATION
- ● PRE-REMOVAL SAMPLE LOCATION
- x PROPOSED CONFIRMATORY COMPOSITE LOCATION
- ▨ ORIGINAL 10' x 10' HOT SPOT
- MOW-4C-065 1,230 PHASE II COMPOSITE SAMPLE LOCATIONS TOTAL LEAD DRY WEIGHT CONCENTRATION (mg/kg)

FIGURE 3-6

MORGANTOWN TECHNICAL COMMITTEE MORGANTOWN, WEST VIRGINIA	CONFIRMATORY SAMPLING MAIN PROCESS BUILDING AREA	
ICF KAISER ENGINEERS PITTSBURGH, PA	DATE: 11/15/96	DR.: B. SNYDER
	SCALE: N.T.S.	FILE NAME: 40152048

JOB NO.: 6647300900 PLOT SCALE: 1=1

STARTED ON: 11/15/96 REVISED: 5/8/97

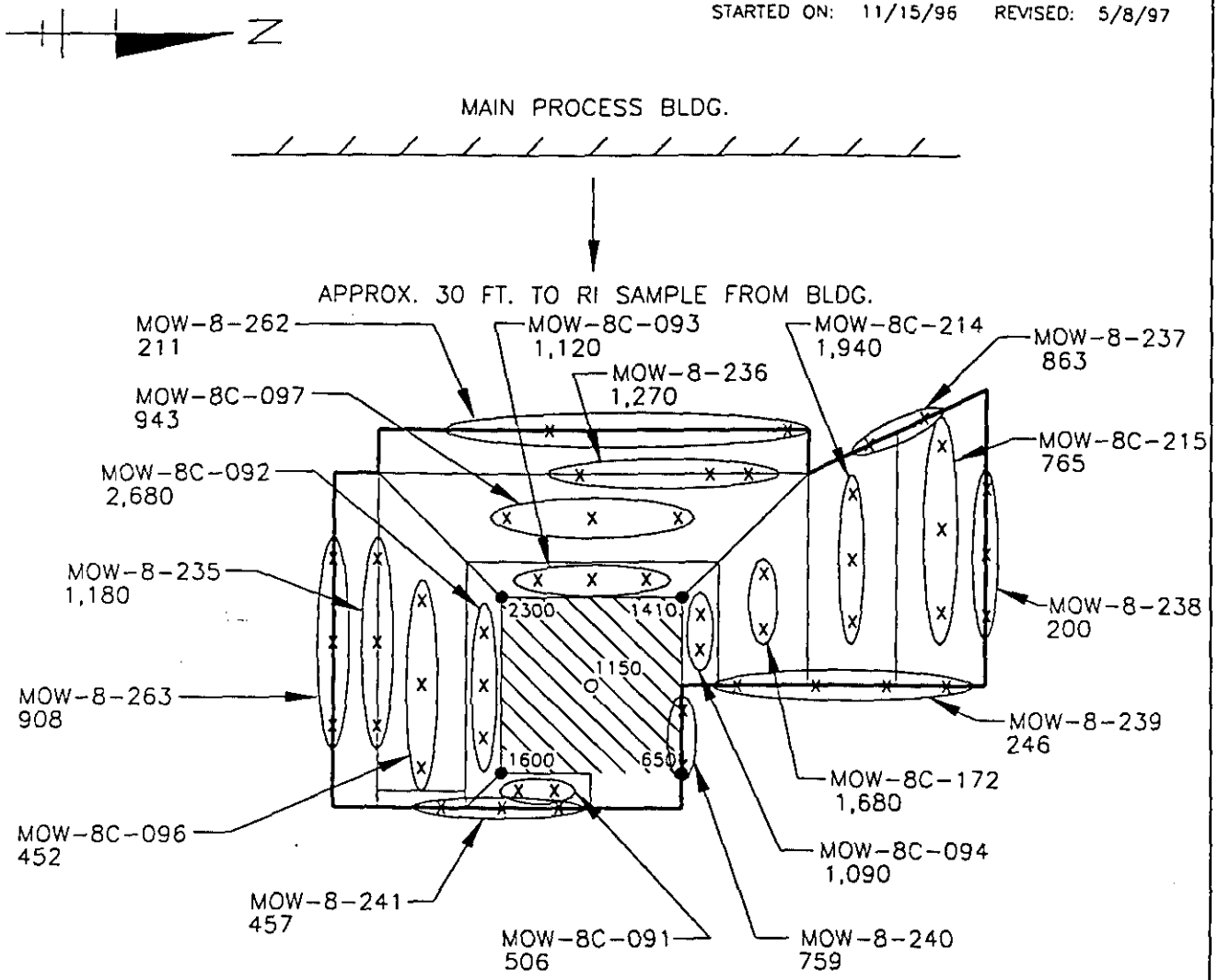

M-SS-8 HOT SPOT

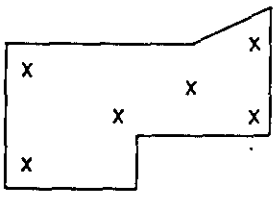

BASE:
MOW-8B-242
134

LEGEND:

- o RI SAMPLE LOCATION
- ● PRE-REMOVAL SAMPLE LOCATION
- x PROPOSED CONFIRMATORY COMPOSITE LOCATION
- ▨ ORIGINAL 10' x 10' HOT SPOTS
- MOW-8C-092 2,680 — PHASE II COMPOSITE SAMPLE LOCATIONS TOTAL LEAD DRY WEIGHT CONCENTRATION (mg/kg)

FIGURE 3-7

MORGANTOWN TECHNICAL COMMITTEE MORGANTOWN, WEST VIRGINIA	CONFIRMATORY SAMPLING MAIN PROCESS BUILDING AREA	
ICF KAISER ENGINEERS PITTSBURGH, PA	DATE: 11/15/96	DR.: B. SNYDER
	SCALE: N.T.S.	FILE NAME: 40152049

JOB NO.: 6647300900 PLOT SCALE: 1=1

STARTED ON: 11/15/96 REVISED: 5/8/97

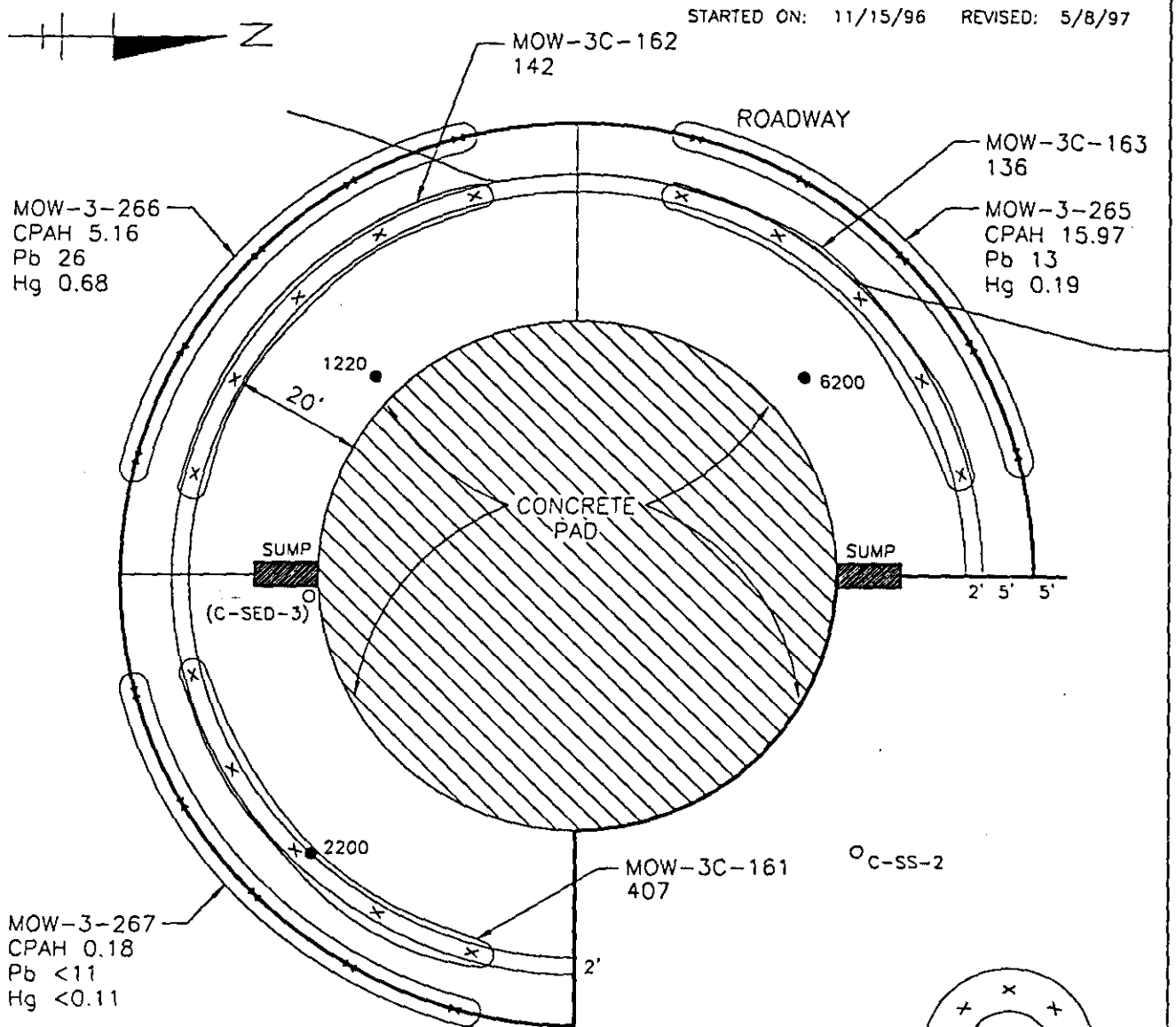

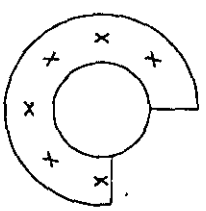

C-SED-3 AND BLUE MATERIAL AT GAS HOLDER

LEGEND:

- ● PRE-REMOVAL SAMPLE (PHASE II)
- x PROPOSED PHASE II SAMPLE LOCATION
- ▨ APPROXIMATE BLUE MATERIAL
- MOW-3C-161 407 PHASE II COMPOSITE SAMPLE LOCATIONS ALL RESULTS IN mg/kg

BASE:
MOW-3B-268
CPAH 0.66
Pb 12
Hg 0.31
MOW-3B-268D
CPAH 0.53
Pb <11
Hg 0.15

FIGURE 3-10

MORGANTOWN TECHNICAL COMMITTEE MORGANTOWN, WEST VIRGINIA	CONFIRMATORY SAMPLING BLUE MATERIAL	
ICF KAISER ENGINEERS PITTSBURGH, PA	DATE: 11/18/96	DR.: B. SNYDER
	SCALE: N.T.S.	FILE NAME: 40152031

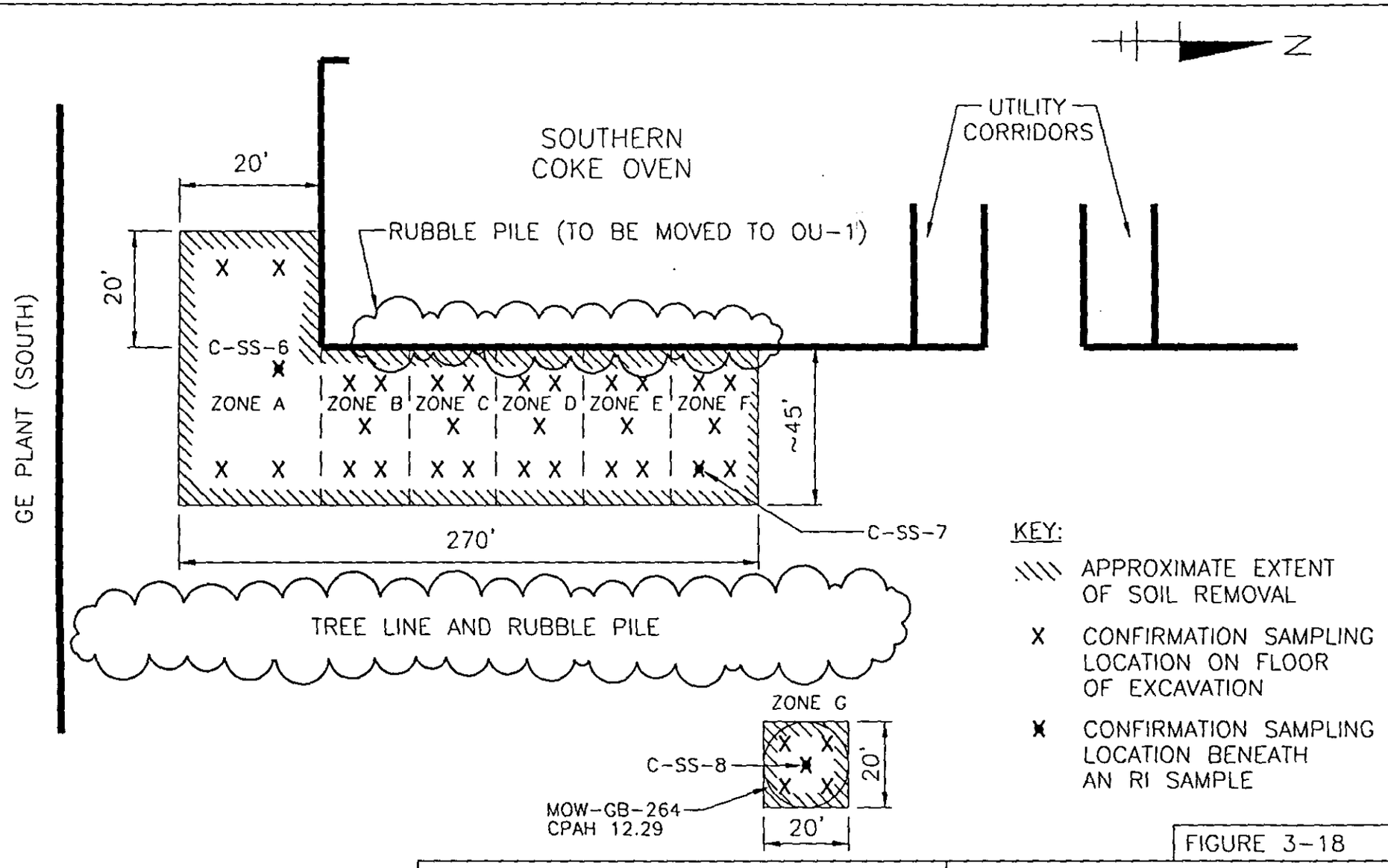

FIGURE 3-18

MORGANTOWN TECHNICAL COMMITTEE MORGANTOWN, WEST VIRGINIA	CONFIRMATION SAMPLE COLLECTION SOIL HOT SPOT EXCAVATION	
ICF KAISER ENGINEERS PITTSBURGH, PA	DATE: 01/20/97	DR.: D. EVANS
	SCALE: N.T.S.	E/F NO.: 40152037

JOB NO.: 6647300300 PLOT SCALE: 1=1

STARTED ON: 01/20/97 REVISED: 5/8/97

Analysis Report

Lancaster Laboratories
A division of Thermo Analytical Inc.

LLI Sample No. SW 2699567
Collected: 4/24/97 at 12:12 by MP

Submitted: 4/25/97 Reported: 4/30/97
Discard: 5/15/97

MOW-1-260 (M-SED-1 South) Composite Soil Sample

Morgantown Ordnance Works Project No. 70043

Account No: 07867
ICF Kaiser Engineers, Inc.
Gateway View Plaza
1600 W. Carson St.
Pittsburgh PA 15219

P.O. 70043
Rel.

CAT NO.	ANALYSIS NAME	AS RECEIVED RESULTS	AS RECEIVED LIMIT OF QUANTITATION	UNITS	DRY WEIGHT RESULTS	DRY WEIGHT LIMIT OF QUANTITATION
0155	Lead	34.	10.	mg/kg	41.	12.
2111	Moisture	17.0	0.50	% by wt.		

"Moisture" represents the loss in weight of the sample after drying with an infrared lamp at 150 degrees Celsius.

1 COPY TO ICF Kaiser Engineers, Inc. ATTN: Mr. Doug Taylor

Questions? Contact your Client Services Representative
De Brooks at (717) 656-2300
08:38:01 D 0001 10 130462 562362
320 0.00 00009009 ASR000

Respectfully Submitted
Ramona V. Layman
Manager, Metals/Leachates

MEMBER ACIL
Lancaster Laboratories
2425 New Holland Pike
PO Box 12425
Lancaster, PA 17605-2425
717-656-2300 Fax 717-656-2681

See reverse side for explanation of symbols and abbreviations

Analysis Report

Lancaster Laboratories
A division of Thermo Analytical Inc.

LLI Sample No. SW 2700457
Collected: 4/25/97 at 10:00 by GM

Submitted: 4/28/97 Reported: 4/30/97
Discard: 5/15/97

MOW-2-269 Composite Soil Sample

Morgantown Ordnance Works Project No. 70043500

Account No: 07867
ICF Kaiser Engineers, Inc.
Gateway View Plaza
1600 W. Carson St.
Pittsburgh PA 15219

P.O. 70043500
Rel.

CAT NO.	ANALYSIS NAME	AS RECEIVED RESULTS	AS RECEIVED LIMIT OF QUANTITATION	UNITS	DRY WEIGHT RESULTS	DRY WEIGHT LIMIT OF QUANTITATION
0155	Lead	16.0	9.7	mg/kg	19.	11.
2111	Moisture	14.1	0.50	% by wt.		

"Moisture" represents the loss in weight of the sample after drying with an infrared lamp at 150 degrees Celsius.

1 COPY TO ICF Kaiser Engineers, Inc. ATTN: Ms. Christine Cecchett

Questions? Contact your Client Services Representative
De Brooks at (717) 656-2300
08:41:37 D 0001 2 130462 562568
320 0.00 00009510 ASR000

Respectfully Submitted
Ramona V. Layman
Manager, Metals/Leachates

MEMBER ACIL
Lancaster Laboratories
2425 New Holland Pike
PO Box 12425
Lancaster, PA 17605-2425
717-656-2300 Fax 717-656-2681

See reverse side for explanation of symbols and abbreviations

Analysis Report

Lancaster Laboratories
A division of Thermo Analytical Inc.

LLI Sample No. SW 2700458
Collected: 4/25/97 at 10:00 by GM

Submitted: 4/28/97 Reported: 4/30/97
Discard: 5/15/97

MOW-2-270 Composite Soil Sample

Morgantown Ordnance Works Project No. 70043500

Account No: 07867
ICF Kaiser Engineers, Inc.
Gateway View Plaza
1600 W. Carson St.
Pittsburgh PA 15219

P.O. 70043500
Rel.

CAT NO.	ANALYSIS NAME	AS RECEIVED RESULTS	AS RECEIVED LIMIT OF QUANTITATION	UNITS	DRY WEIGHT RESULTS	DRY WEIGHT LIMIT OF QUANTITATION
0155	Lead	145.	9.9	mg/kg	173.	12.
2111	Moisture	16.5	0.50	% by wt.		

"Moisture" represents the loss in weight of the sample after drying with an infrared lamp at 150 degrees Celsius.

1 COPY TO ICF Kaiser Engineers, Inc. ATTN: Ms. Christine Cecchett

Questions? Contact your Client Services Representative
De Brooks at (717) 656-2300
08:41:50 D 0001 2 130462 562568
320 0.00 00005330 ASR000

Respectfully Submitted
Ramona V. Layman
Manager, Metals/Leachates

MEMBER ACIL
Lancaster Laboratories
2425 New Holland Pike
PO Box 12425
Lancaster, PA 17605-2425
717-656-2300 Fax 717-656-2681

See reverse side for explanation of symbols and abbreviations

Analysis Repor

Lancaster Laboratories
A division of Thermo Analytical Inc.

LLI Sample No. SW 2699568
Collected: 4/24/97 at 12:25 by MP

Submitted: 4/25/97 Reported: 4/30/97
Discard: 5/15/97

MOW-4-261 (M-SS-4 East) Composite Soil Sample

Morgantown Ordnance Works Project No. 70043

Account No: 07867
ICF Kaiser Engineers, Inc.
Gateway View Plaza
1600 W. Carson St.
Pittsburgh PA 15219

P.O. 70043
Rel.

CAT NO.	ANALYSIS NAME	AS RECEIVED RESULTS	AS RECEIVED LIMIT OF QUANTITATION	UNITS	DRY WEIGHT RESULTS	DRY WEIGHT LIMIT OF QUANTITATION
0155	Lead	145.	10.	mg/kg	167.	12.
2111	Moisture	13.3	0.50	% by wt.		

"Moisture" represents the loss in weight of the sample after drying with an infrared lamp at 150 degrees Celsius.

1 COPY TO ICF Kaiser Engineers, Inc. ATTN: Mr. Doug Taylor

Questions? Contact your Client Services Representative
De Brooks at (717) 656-2300
08:38:08 D 0001 10 130462 562362
320 0.00 00005049 ASR000

Respectfully Submitted
Ramona V. Layman
Manager, Metals/Leachates

MEMBER ACIL
Lancaster Laboratories
2425 New Holland Pike
PO Box 12425
Lancaster, PA 17605-2425
717-656-2300 Fax 717-656-2681

See reverse side for explanation of symbols and abbreviations

Analysis Repor

Lancaster Laboratories
A division of Thermo Analytical Inc.

LLI Sample No. SW 2699569
Collected: 4/24/97 at 12:47 by MP

Submitted: 4/25/97 Reported: 4/30/97
Discard: 5/15/97

MOW-8-262 (M-SS-8 West) Composite Soil Sample

Morgantown Ordnance Works Project No. 70043

Account No: 07867
ICF Kaiser Engineers, Inc.
Gateway View Plaza
1600 W. Carson St.
Pittsburgh PA 15219

P.O. 70043
Rel.

CAT NO.	ANALYSIS NAME	AS RECEIVED RESULTS	AS RECEIVED LIMIT OF QUANTITATION	UNITS	DRY WEIGHT RESULTS	DRY WEIGHT LIMIT OF QUANTITATION
0155	Lead	171.	10.	mg/kg	211.	12.
2111	Moisture	19.1	0.50	% by wt.		

"Moisture" represents the loss in weight of the sample after drying with an infrared lamp at 150 degrees Celsius.

1 COPY TO ICF Kaiser Engineers, Inc. ATTN: Mr. Doug Taylor

Questions? Contact your Client Services Representative
De Brooks at (717) 656-2300
08:38:17 D 0001 10 130462 562362
320 0.00 00005049 ASR000

Respectfully Submitted
Ramona V. Layman
Manager, Metals/Leachates

MEMBER ACIL
Lancaster Laboratories
2425 New Holland Pike
PO Box 12425
Lancaster, PA 17605-2425
717-656-2300 Fax 717-656-2681

See reverse side for explanation of symbols and abbreviations

Analysis Report

Lancaster Laboratories
A division of Thermo Analytical Inc.

LLI Sample No. SW 2699570
Collected: 4/24/97 at 12:55 by MP

Submitted: 4/25/97 Reported: 4/30/97
Discard: 5/15/97

MOW-8-263 (M-SS-8 South) Composite Soil Sample

Morgantown Ordnance Works Project No. 70043

Account No: 07867
ICF Kaiser Engineers, Inc.
Gateway View Plaza
1600 W. Carson St.
Pittsburgh PA 15219

P.O. 70043
Rel.

CAT NO.	ANALYSIS NAME	AS RECEIVED RESULTS	AS RECEIVED LIMIT OF QUANTITATION	UNITS	DRY WEIGHT RESULTS	DRY WEIGHT LIMIT OF QUANTITATION
0155	Lead	574.	50.	mg/kg	908.	79.
2111	Moisture	36.8	0.50	% by wt.		

"Moisture" represents the loss in weight of the sample after drying with an infrared lamp at 150 degrees Celsius.

1 COPY TO ICF Kaiser Engineers, Inc. ATTN: Mr. Doug Taylor

Questions? Contact your Client Services Representative
De Brooks at (717) 656-2300
08:38:27 D 0001 10 130462 562362
320 0.00 00005049 ASR000

Respectfully Submitted
Ramona V. Layman
Manager, Metals/Leachates

MEMBER ACIL
Lancaster Laboratories
2425 New Holland Pike
PO Box 12425
Lancaster, PA 17605-2425
717-656-2300 Fax 717-656-2681

See reverse side for explanation of symbols and abbreviations

Analysis Report

Lancaster Laboratories
A division of Thermo Analytical Inc.

LLI Sample No. WW 2695130
Collected: 4/16/97 at 12:30 by CC

Submitted: 4/17/97 Reported: 5/ 1/97
Discard: 5/ 9/97

MOW-041697-M1 Grab Water Sample

Morgantown Ordnance - Project No. 66473

Account No: 07867
ICF Kaiser Engineers, Inc.
Gateway View Plaza
1600 W. Carson St.
Pittsburgh PA 15219

P.O. 66473
Rel.

CAT NO.	ANALYSIS NAME	AS RECEIVED RESULTS	LIMIT OF QUANTITATION	UNITS	
7043	Aluminum TR	< 0.20	0.20	mg/l	
7053	Copper TR	0.0124	0.0040	mg/l	
7054	Iron TR	0.54	0.10	mg/l	
7055	Lead TR	< 0.0050	0.0050	mg/l	
7058	Manganese TR	0.269	0.0020	mg/l	
7072	Zinc TR	0.131	0.020	mg/l	
0259	Mercury	0.00022	0.00020	mg/l	
1861	PAH's in Water			See Page	2
6030	PCBs in Water		1.	See Page	3
0539	Benzene	< 1.	1.	ug/l	
0553	Base Neutrals			See Page	4
0554	Base Neutrals (cont)			See Page	5
0224	Chloride	17.1	1.0	mg/l	
0237	Total Cyanide (water)	< 0.0050	0.0050	mg/l	
0273	Total Organic Carbon	2.5	1.0	mg/l	
	The Total Organic Carbon (TOC) result reported above was determined by measuring total carbon by a persulfate digestion/infrared detection method on an acidified sample which has been purged of inorganic carbon using nitrogen. It represents "non-purgeable TOC".				
0434	Phenols (water)	< 0.0050	0.0050	mg/l	
1504	Fluoride	< 0.50	0.50	mg/l	
0200	pH	7.47	0.010		
0206	Total Suspended Solids	< 9.0	9.0	mg/l	
0231	Oil & Grease	< 6.0	6.0	mg/l	
	The blank analyzed with this sample contained 1.2 mg/l of oil and grease. As directed in EPA method 413.1, the data reported above was corrected for the blank value.				
1553	Chemical Oxygen Demand	< 8.0	8.0	mg/l	
6914	Ammonia-Nitrogen	< 0.20	0.20	mg/l	

1 COPY TO ICF Kaiser Engineers, Inc. ATTN: Mr. Doug Taylor

Questions? Contact your Client Services Representative
De Brooks at (717) 656-2300
04:58:01 D 0001 3 130462 561242
609 0.00 00130004 ASR000

Respectfully Submitted
Ramona V. Layman
Manager, Metals/Leachates

MEMBER ACIL
Lancaster Laboratories
2425 New Holland Pike
PO Box 12425
Lancaster, PA 17605-2425
717-656-2300 Fax 717-656-2681

See reverse side for explanation of symbols and abbreviations

Lancaster Laboratories
A division of Thermo Analytical Inc.

LLI Sample No. WW 2695130
Collected: 4/16/97 at 12:30 by CC

Submitted: 4/17/97 Reported: 5/ 1/97
Discard: 5/ 9/97

MOW-041697-M1 Grab Water Sample

Morgantown Ordnance - Project No. 66473

Account No: 07867
ICF Kaiser Engineers, Inc.
Gateway View Plaza
1600 W. Carson St.
Pittsburgh PA 15219

P.O. 66473
Rel.

CAT NO.	ANALYSIS NAME	AS RECEIVED RESULTS	LIMIT OF QUANTITATION	UNITS
PAH's in Water				
3280	Naphthalene	< 10.	10.	ug/l
3281	Acenaphthylene	< 20.	20.	ug/l
3282	Acenaphthene	< 20.	20.	ug/l
3283	Fluorene	< 2.	2.	ug/l
3284	Phenanthrene	< 2.	2.	ug/l
3285	Anthracene	< 1.	1.	ug/l
3286	Fluoranthene	< 0.5	0.5	ug/l
3287	Pyrene	< 2.	2.	ug/l
3288	Benzo(a)anthracene	< 0.1	0.1	ug/l
3289	Chrysene	< 1.	1.	ug/l
3290	Benzo(b)fluoranthene	< 0.2	0.2	ug/l
3291	Benzo(k)fluoranthene	< 0.1	0.1	ug/l
3292	Benzo(a)pyrene	< 0.2	0.2	ug/l
3293	Dibenzo(a,h)anthracene	< 0.2	0.2	ug/l
3294	Benzo(g,h,i)perylene	< 0.5	0.5	ug/l
3295	Indeno(1,2,3-cd)pyrene	< 0.5	0.5	ug/l

Questions? Contact your Client Services Representative
De Brooks at (717) 656-2300

Respectfully Submitted
Jenifer E. Hess, B.S.
Group Leader Pesticides/PCBs

MEMBER ACIL
Lancaster Laboratories
2425 New Holland Pike
PO Box 12425
Lancaster, PA 17605-2425
717-656-2300 Fax 717-656-2681

See reverse side for explanation of symbols and abbreviations

Lancaster Laboratories
A division of Thermo Analytical Inc.

LLI Sample No. WW 2695130
Collected: 4/16/97 at 12:30 by CC

Submitted: 4/17/97 Reported: 5/ 1/97
Discard: 5/ 9/97

MOW-041697-M1 Grab Water Sample

Morgantown Ordnance - Project No. 66473

Account No: 07867
ICF Kaiser Engineers, Inc.
Gateway View Plaza
1600 W. Carson St.
Pittsburgh PA 15219

P.O. 66473
Rel.

CAT NO.	ANALYSIS NAME	AS RECEIVED RESULTS	LIMIT OF QUANTITATION	UNITS
PCBs in Water				
0639	PCB-1016	< 0.94	0.94	ug/l
0640	PCB-1221	< 0.94	0.94	ug/l
0641	PCB-1232	< 0.94	0.94	ug/l
0642	PCB-1242	< 0.94	0.94	ug/l
0643	PCB-1248	< 0.94	0.94	ug/l
0644	PCB-1254	< 0.94	0.94	ug/l
0645	PCB-1260	< 0.94	0.94	ug/l

Questions? Contact your Client Services Representative
De Brooks at (717) 656-2300

Respectfully Submitted
Jenifer E. Hess, B.S.
Group Leader Pesticides/PCBs

MEMBER ACIL
Lancaster Laboratories
2425 New Holland Pike
PO Box 12425
Lancaster, PA 17605-2425
717-656-2300 Fax 717-656-2681

Lancaster Laboratories
A division of Thermo Analytical Inc.

LLI Sample No. WW 2695130
Collected: 4/16/97 at 12:30 by CC

Submitted: 4/17/97 Reported: 5/ 1/97
Discard: 5/ 9/97

MOW-041697-M1 Grab Water Sample

Morgantown Ordnance - Project No. 66473

Account No: 07867
ICF Kaiser Engineers, Inc.
Gateway View Plaza
1600 W. Carson St.
Pittsburgh PA 15219

P.O. 66473
Rel.

CAT NO.	ANALYSIS NAME	AS RECEIVED RESULTS	LIMIT OF QUANTITATION	UNITS
Base Neutrals				
0689	hexachlorobenzene	< 10.	10.	ug/l

Questions? Contact your Client Services Representative
De Brooks at (717) 656-2300

Respectfully Submitted
Christine M. Ratcliff, B.S.
Senior Chemist, GC/MS

MEMBER ACIL
Lancaster Laboratories
2425 New Holland Pike
PO Box 12425
Lancaster, PA 17605-2425
717-656-2300 Fax 717-656-2681

See reverse side for explanation of symbols and abbreviations

Lancaster Laboratories
A division of Thermo Analytical Inc.

LLI Sample No. WW 2695130
Collected: 4/16/97 at 12:30 by CC

Submitted: 4/17/97 Reported: 5/ 1/97
Discard: 5/ 9/97

MOW-041697-M1 Grab Water Sample

Morgantown Ordnance - Project No. 66473

Account No: 07867
ICF Kaiser Engineers, Inc.
Gateway View Plaza
1600 W. Carson St.
Pittsburgh PA 15219

P.O. 66473
Rel.

CAT NO.	ANALYSIS NAME	AS RECEIVED RESULTS	LIMIT OF QUANTITATION	UNITS
Base Neutrals (cont)				

Questions? Contact your Client Services Representative
De Brooks at (717) 656-2300

Respectfully Submitted
Christine M. Ratcliff, B.S.
Senior Chemist, GC/MS

MEMBER ACIL
Lancaster Laboratories
2425 New Holland Pike
PO Box 12425
Lancaster, PA 17605-2425
717-656-2300 Fax 717-656-2681

See reverse side for explanation of symbols and abbreviations

Analysis Report

Lancaster Laboratories
A division of Thermo Analytical Inc.

LLI Sample No. WW 2698022
Collected: 4/22/97 at 10:10

Submitted: 4/23/97 Reported: 4/28/97
Discard: 5/ 6/97

MOW-042297-M2-1 Grab Water Sample

Morgantown Ordnance - Project No. 66473

Account No: 07867
ICF Kaiser Engineers, Inc.
Gateway View Plaza
1600 W. Carson St.
Pittsburgh PA 15219

P.O. 66473
Rel.

CAT NO.	ANALYSIS NAME	AS RECEIVED RESULTS	LIMIT OF QUANTITATION	UNITS
7043	Aluminum TR	< 0.20	0.20	mg/l
7053	Copper TR	0.0041	0.0040	mg/l
7054	Iron TR	0.50	0.10	mg/l
7055	Lead TR	0.0097	0.0050	mg/l
7058	Manganese TR	0.0267	0.0020	mg/l
7072	Zinc TR	0.036	0.020	mg/l
0259	Mercury	< 0.00020	0.00020	mg/l
1861	PAH's in Water			See Page 2
6030	PCBs in Water		1.	See Page 3
0539	Benzene	< 1.	1.	ug/l
0553	Base Neutrals			See Page 4
0554	Base Neutrals (cont)			See Page 5
0224	Chloride	7.4	1.0	mg/l
0237	Total Cyanide (water)	0.0190	0.0050	mg/l
0273	Total Organic Carbon	3.2	1.0	mg/l
	The Total Organic Carbon (TOC) result reported above was determined by measuring total carbon by a persulfate digestion/infrared detection method on an acidified sample which has been purged of inorganic carbon using nitrogen. It represents "non-purgeable TOC".			
0434	Phenols (water)	< 0.0050	0.0050	mg/l
1504	Fluoride	0.81	0.50	mg/l
0200	pH	6.73	0.010	
0206	Total Suspended Solids	10.0	9.0	mg/l
0231	Oil & Grease	< 6.0	6.0	mg/l
	The blank analyzed with this sample contained 5.1 mg/l of oil and grease. As directed in EPA method 413.1, the data reported above was corrected for the blank value.			
4001	Chemical Oxygen Demand	< 50.	50.	mg/l
6914	Ammonia-Nitrogen	< 0.20	0.20	mg/l

1 COPY TO ICF Kaiser Engineers, Inc. ATTN: Mr. Doug Taylor

Questions? Contact your Client Services Representative
De Brooks at (717) 656-2300
06:36:26 D 0001 2 130462 561967
320 0.00 00128941 ASR000

Respectfully Submitted
Ramona V. Layman
Manager, Metals/Leachates

MEMBER ACIL
Lancaster Laboratories
2425 New Holland Pike
PO Box 12425
Lancaster, PA 17605-2425
717-656-2300 Fax 717-656-2681

See reverse side for explanation of symbols and abbreviations

Lancaster Laboratories
A division of Thermo Analytical Inc.

LLI Sample No. WW 2698022
Collected: 4/22/97 at 10:10

Submitted: 4/23/97 Reported: 4/28/97
Discard: 5/ 6/97

MOW-042297-M2-1 Grab Water Sample

Morgantown Ordnance - Project No. 66473

Account No: 07867
ICF Kaiser Engineers, Inc.
Gateway View Plaza
1600 W. Carson St.
Pittsburgh PA 15219

P.O. 66473
Rel.

CAT NO.	ANALYSIS NAME	AS RECEIVED RESULTS	LIMIT OF QUANTITATION	UNITS
PAH's in Water				
3280	Naphthalene	< 10.	10.	ug/l
3281	Acenaphthylene	< 20.	20.	ug/l
3282	Acenaphthene	< 20.	20.	ug/l
3283	Fluorene	< 2.0	2.0	ug/l
3284	Phenanthrene	< 2.0	2.0	ug/l
3285	Anthracene	< 1.0	1.0	ug/l
3286	Fluoranthene	< 0.50	0.50	ug/l
3287	Pyrene	< 2.0	2.0	ug/l
3288	Benzo(a)anthracene	< 0.10	0.10	ug/l
3289	Chrysene	< 1.0	1.0	ug/l
3290	Benzo(b)fluoranthene	< 0.20	0.20	ug/l
3291	Benzo(k)fluoranthene	< 0.10	0.10	ug/l
3292	Benzo(a)pyrene	< 0.20	0.20	ug/l
3293	Dibenzo(a,h)anthracene	< 0.20	0.20	ug/l
3294	Benzo(g,h,i)perylene	< 0.50	0.50	ug/l
3295	Indeno(1,2,3-cd)pyrene	< 0.50	0.50	ug/l

Questions? Contact your Client Services Representative
De Brooks at (717) 656-2300

Respectfully Submitted
Jenifer E. Hess, B.S.
Group Leader Pesticides/PCBs

MEMBER ACIL
Lancaster Laboratories
2425 New Holland Pike
PO Box 12425
Lancaster, PA 17605-2425
717-656-2300 Fax 717-656-2681

See reverse side for explanation of symbols and abbreviations

Lancaster Laboratories
A division of Thermo Analytical Inc.

LLI Sample No. WW 2698022
Collected: 4/22/97 at 10:10

Submitted: 4/23/97 Reported: 4/28/97
Discard: 5/ 6/97

MOW-042297-M2-1 Grab Water Sample

Morgantown Ordnance - Project No. 66473

Account No: 07867
ICF Kaiser Engineers, Inc.
Gateway View Plaza
1600 W. Carson St.
Pittsburgh PA 15219

P.O. 66473
Rel.

CAT NO.	ANALYSIS NAME	AS RECEIVED RESULTS	LIMIT OF QUANTITATION	UNITS
PCBs in Water				
0639	PCB-1016	< 0.94	0.94	ug/l
0640	PCB-1221	< 0.94	0.94	ug/l
0641	PCB-1232	< 0.94	0.94	ug/l
0642	PCB-1242	< 0.94	0.94	ug/l
0643	PCB-1248	< 0.94	0.94	ug/l
0644	PCB-1254	< 0.94	0.94	ug/l
0645	PCB-1260	< 0.94	0.94	ug/l

Questions? Contact your Client Services Representative
De Brooks at (717) 656-2300

Respectfully Submitted
Jenifer E. Hess, B.S.
Group Leader Pesticides/PCBs

MEMBER ACIL
Lancaster Laboratories
2425 New Holland Pike
PO Box 12425
Lancaster, PA 17605-2425
717-656-2300 Fax 717-656-2681

See reverse side for explanation of symbols and abbreviations

Lancaster Laboratories
A division of Thermo Analytical Inc.

LLI Sample No. WW 2698022
Collected: 4/22/97 at 10:10

Submitted: 4/23/97 Reported: 4/28/97
Discard: 5/ 6/97

MOW-042297-M2-1 Grab Water Sample

Morgantown Ordnance - Project No. 66473

Account No: 07867
ICF Kaiser Engineers, Inc.
Gateway View Plaza
1600 W. Carson St.
Pittsburgh PA 15219

P.O. 66473
Rel.

CAT NO.	ANALYSIS NAME	AS RECEIVED RESULTS	LIMIT OF QUANTITATION	UNITS
Base Neutrals				
0689	hexachlorobenzene	< 10.	10.	ug/l

Questions? Contact your Client Services Representative
De Brooks at (717) 656-2300

Respectfully Submitted
Christine M. Ratcliff, B.S.
Senior Chemist, GC/MS

MEMBER ACIL
Lancaster Laboratories
2425 New Holland Pike
PO Box 12425
Lancaster, PA 17605-2425
717-656-2300 Fax 717-656-2681

See reverse side for explanation of symbols and abbreviations

Lancaster Laboratories
A division of Thermo Analytical Inc.

LLI Sample No. WW 2698022
Collected: 4/22/97 at 10:10

Submitted: 4/23/97 Reported: 4/28/97
Discard: 5/ 6/97

MOW-042297-M2-1 Grab Water Sample

Morgantown Ordnance - Project No. 66473

Account No: 07867
ICF Kaiser Engineers, Inc.
Gateway View Plaza
1600 W. Carson St.
Pittsburgh PA 15219

P.O. 66473
Rel.

CAT NO.	ANALYSIS NAME	AS RECEIVED RESULTS	LIMIT OF QUANTITATION	UNITS
Base Neutrals (cont)				

Questions? Contact your Client Services Representative
De Brooks at (717) 656-2300

Respectfully Submitted
Christine M. Ratcliff, B.S.
Senior Chemist, GC/MS

MEMBER ACIL
Lancaster Laboratories
2425 New Holland Pike
PO Box 12425
Lancaster, PA 17605-2425
717-656-2300 Fax 717-656-2681

See reverse side for explanation of symbols and abbreviations

Lancaster Laboratories
A division of Thermo Analytical Inc.

LLI Sample No. WW 2698023
Collected: 4/22/97 at 16:05

Submitted: 4/23/97 Reported: 4/28/97
Discard: 5/ 6/97

MOW-042297-M2-2 Grab Water Sample

Morgantown Ordnance - Project No. 66473

Account No: 07867
ICF Kaiser Engineers, Inc.
Gateway View Plaza
1600 W. Carson St.
Pittsburgh PA 15219

P.O. 66473
Rel.

CAT NO.	ANALYSIS NAME	AS RECEIVED RESULTS	LIMIT OF QUANTITATION	UNITS
7043	Aluminum TR	0.21	0.20	mg/l
7053	Copper TR	0.0050	0.0040	mg/l
7054	Iron TR	0.47	0.10	mg/l
7055	Lead TR	0.0149	0.0050	mg/l
7058	Manganese TR	0.0226	0.0020	mg/l
7072	Zinc TR	0.042	0.020	mg/l
0259	Mercury	< 0.00020	0.00020	mg/l
1861	PAH's in Water			See Page 2
6030	PCBs in Water		1.	See Page 3
0539	Benzene	< 1.	1.	ug/l
0553	Base Neutrals			See Page 4
0554	Base Neutrals (cont)			See Page 5
0224	Chloride	14.4	1.0	mg/l
0237	Total Cyanide (water)	0.0135	0.0050	mg/l
0273	Total Organic Carbon	3.3	1.0	mg/l
	The Total Organic Carbon (TOC) result reported above was determined by measuring total carbon by a persulfate digestion/infrared detection method on an acidified sample which has been purged of inorganic carbon using nitrogen. It represents "non-purgeable TOC".			
0434	Phenols (water)	< 0.0050	0.0050	mg/l
1504	Fluoride	1.25	0.50	mg/l
0200	pH	6.97	0.010	
0206	Total Suspended Solids	10.8	9.0	mg/l
0231	Oil & Grease	< 6.0	6.0	mg/l
	The blank analyzed with this sample contained 5.1 mg/l of oil and grease. As directed in EPA method 413.1, the data reported above was corrected for the blank value.			
4001	Chemical Oxygen Demand	< 50.	50.	mg/l
6914	Ammonia-Nitrogen	< 0.20	0.20	mg/l

1 COPY TO ICF Kaiser Engineers, Inc. ATTN: Mr. Doug Taylor

Questions? Contact your Client Services Representative
De Brooks at (717) 656-2300
06:36:46 D 0001 2 130462 561967
320 0.00 00124761 ASR000

Respectfully Submitted
Ramona V. Layman
Manager, Metals/Leachates

MEMBER ACIL
Lancaster Laboratories
2425 New Holland Pike
PO Box 12425
Lancaster, PA 17605-2425
717-656-2300 Fax 717-656-2681

See reverse side for explanation of symbols and abbreviations

Lancaster Laboratories
A division of Thermo Analytical Inc.

LLI Sample No. WW 2698023
Collected: 4/22/97 at 16:05

Submitted: 4/23/97 Reported: 4/28/97
Discard: 5/ 6/97

MOW-042297-M2-2 Grab Water Sample

Morgantown Ordnance - Project No. 66473

Account No: 07867
ICF Kaiser Engineers, Inc.
Gateway View Plaza
1600 W. Carson St.
Pittsburgh PA 15219

P.O. 66473
Rel.

CAT NO.	ANALYSIS NAME	AS RECEIVED RESULTS	LIMIT OF QUANTITATION	UNITS
PAH's in Water				
3280	Naphthalene	< 10.	10.	ug/l
3281	Acenaphthylene	< 20.	20.	ug/l
3282	Acenaphthene	< 20.	20.	ug/l
3283	Fluorene	< 2.0	2.0	ug/l
3284	Phenanthrene	< 2.0	2.0	ug/l
3285	Anthracene	< 1.0	1.0	ug/l
3286	Fluoranthene	< 0.50	0.50	ug/l
3287	Pyrene	< 2.0	2.0	ug/l
3288	Benzo(a)anthracene	< 0.10	0.10	ug/l
3289	Chrysene	< 1.0	1.0	ug/l
3290	Benzo(b)fluoranthene	< 0.20	0.20	ug/l
3291	Benzo(k)fluoranthene	< 0.10	0.10	ug/l
3292	Benzo(a)pyrene	< 0.20	0.20	ug/l
3293	Dibenzo(a,h)anthracene	< 0.20	0.20	ug/l
3294	Benzo(g,h,i)perylene	< 0.50	0.50	ug/l
3295	Indeno(1,2,3-cd)pyrene	< 0.50	0.50	ug/l

Questions? Contact your Client Services Representative
De Brooks at (717) 656-2300

Respectfully Submitted
Jenifer E. Hess, B.S.
Group Leader Pesticides/PCBs

MEMBER ACIL
Lancaster Laboratories
2425 New Holland Pike
PO Box 12425
Lancaster, PA 17605-2425
717-656-2300 Fax 717-656-2681

See reverse side for explanation of symbols and abbreviations

Lancaster Laboratories
A division of Thermo Analytical Inc.

LLI Sample No. WW 2698023
Collected: 4/22/97 at 16:05

Submitted: 4/23/97 Reported: 4/28/97
Discard: 5/ 6/97

MOW-042297-M2-2 Grab Water Sample

Morgantown Ordnance - Project No. 66473

Account No: 07867
ICF Kaiser Engineers, Inc.
Gateway View Plaza
1600 W. Carson St.
Pittsburgh PA 15219

P.O. 66473
Rel.

CAT NO.	ANALYSIS NAME	AS RECEIVED RESULTS	LIMIT OF QUANTITATION	UNITS
PCBs in Water				
0639	PCB-1016	< 0.95	0.95	ug/l
0640	PCB-1221	< 0.95	0.95	ug/l
0641	PCB-1232	< 0.95	0.95	ug/l
0642	PCB-1242	< 0.95	0.95	ug/l
0643	PCB-1248	< 0.95	0.95	ug/l
0644	PCB-1254	< 0.95	0.95	ug/l
0645	PCB-1260	< 0.95	0.95	ug/l

Questions? Contact your Client Services Representative
De Brooks at (717) 656-2300

Respectfully Submitted
Jenifer E. Hess, B.S.
Group Leader Pesticides/PCBs

MEMBER ACIL
Lancaster Laboratories
2425 New Holland Pike
PO Box 12425
Lancaster, PA 17605-2425
717-656-2300 Fax 717-656-2681

Lancaster Laboratories
A division of Thermo Analytical Inc.

LLI Sample No. WW 2698023
Collected: 4/22/97 at 16:05

Submitted: 4/23/97 Reported: 4/28/97
Discard: 5/ 6/97

MOW-042297-M2-2 Grab Water Sample

Morgantown Ordnance - Project No. 66473

Account No: 07867
ICF Kaiser Engineers, Inc.
Gateway View Plaza
1600 W. Carson St.
Pittsburgh PA 15219

P.O. 66473
Rel.

CAT NO.	ANALYSIS NAME	AS RECEIVED RESULTS	LIMIT OF QUANTITATION	UNITS
Base Neutrals				
0689	hexachlorobenzene	< 10.	10.	ug/l

Questions? Contact your Client Services Representative
De Brooks at (717) 656-2300

Respectfully Submitted
Christine M. Ratcliff, B.S.
Senior Chemist, GC/MS

MEMBER ACIL
Lancaster Laboratories
2425 New Holland Pike
PO Box 12425
Lancaster, PA 17605-2425
717-656-2300 Fax 717-656-2681

See reverse side for explanation of symbols and abbreviations

Lancaster Laboratories
A division of Thermo Analytical Inc.

LLI Sample No. WW 2698023
Collected: 4/22/97 at 16:05

Submitted: 4/23/97 Reported: 4/28/97
Discard: 5/ 6/97

MOW-042297-M2-2 Grab Water Sample

Morgantown Ordnance - Project No. 66473

Account No: 07867
ICF Kaiser Engineers, Inc.
Gateway View Plaza
1600 W. Carson St.
Pittsburgh PA 15219

P.O. 66473
Rel.

CAT NO.	ANALYSIS NAME	AS RECEIVED RESULTS	LIMIT OF QUANTITATION	UNITS
Base Neutrals (cont)				

Questions? Contact your Client Services Representative
De Brooks at (717) 656-2300

Respectfully Submitted
Christine M. Ratcliff, B.S.
Senior Chemist, GC/MS

MEMBER ACIL
Lancaster Laboratories
2425 New Holland Pike
PO Box 12425
Lancaster, PA 17605-2425
717-656-2300 Fax 717-656-2681

Lancaster Laboratories
A division of Thermo Analytical Inc.

LLI Sample No. WW 2695131
Collected: 4/16/97 at 11:30 by CC

Submitted: 4/17/97 Reported: 5/ 1/97
Discard: 5/ 9/97

RB-12 Grab Water Sample

Morgantown Ordnance - Project No. 66473

Account No: 07867
ICF Kaiser Engineers, Inc.
Gateway View Plaza
1600 W. Carson St.
Pittsburgh PA 15219

P.O. 66473
Rel.

CAT NO.	ANALYSIS NAME	AS RECEIVED RESULTS	LIMIT OF QUANTITATION	UNITS
7043	Aluminum TR	< 0.20	0.20	mg/l
7053	Copper TR	< 0.0040	0.0040	mg/l
7054	Iron TR	< 0.10	0.10	mg/l
7055	Lead TR	< 0.0050	0.0050	mg/l
7058	Manganese TR	0.0041	0.0020	mg/l
7072	Zinc TR	< 0.020	0.020	mg/l
0259	Mercury	< 0.00020	0.00020	mg/l
1861	PAH's in Water			See Page 2
6030	PCBs in Water		1.	See Page 3
0539	Benzene	< 1.	1.	ug/l
0553	Base Neutrals			See Page 4
0554	Base Neutrals (cont)			See Page 5
0224	Chloride	< 0.20	0.20	mg/l
0237	Total Cyanide (water)	< 0.0050	0.0050	mg/l
0273	Total Organic Carbon	< 1.0	1.0	mg/l
	The Total Organic Carbon (TOC) result reported above was determined by measuring total carbon by a persulfate digestion/infrared detection method on an acidified sample which has been purged of inorganic carbon using nitrogen. It represents "non-purgeable TOC".			
0434	Phenols (water)	< 0.0050	0.0050	mg/l
1504	Fluoride	0.15	0.10	mg/l
0200	pH	8.03	0.010	
0206	Total Suspended Solids	< 9.0	9.0	mg/l
0231	Oil & Grease	< 6.0	6.0	mg/l
	The blank analyzed with this sample contained 5.1 mg/l of oil and grease. As directed in EPA method 413.1, the data reported above was corrected for the blank value.			
1553	Chemical Oxygen Demand	< 8.0	8.0	mg/l
6914	Ammonia-Nitrogen	< 0.20	0.20	mg/l

1 COPY TO ICF Kaiser Engineers, Inc. ATTN: Mr. Doug Taylor

Questions? Contact your Client Services Representative
De Brooks at (717) 656-2300
04:58:26 D 0001 3 130462 561242
609 0.00 00066220 ASR000

Respectfully Submitted
Ramona V. Layman
Manager, Metals/Leachates

MEMBER ACIL
Lancaster Laboratories
2425 New Holland Pike
PO Box 12425
Lancaster, PA 17605-2425
717-656-2300 Fax 717-656-2681

Lancaster Laboratories
A division of Thermo Analytical Inc.

LLI Sample No. WW 2695131
Collected: 4/16/97 at 11:30 by CC

Submitted: 4/17/97 Reported: 5/ 1/97
Discard: 5/ 9/97

RB-12 Grab Water Sample

Morgantown Ordnance - Project No. 66473

Account No: 07867
ICF Kaiser Engineers, Inc.
Gateway View Plaza
1600 W. Carson St.
Pittsburgh PA 15219

P.O. 66473
Rel.

CAT NO.	ANALYSIS NAME	AS RECEIVED RESULTS	LIMIT OF QUANTITATION	UNITS
PAH's in Water				
3280	Naphthalene	< 10.	10.	ug/l
3281	Acenaphthylene	< 20.	20.	ug/l
3282	Acenaphthene	< 20.	20.	ug/l
3283	Fluorene	< 2.	2.	ug/l
3284	Phenanthrene	< 2.	2.	ug/l
3285	Anthracene	< 1.	1.	ug/l
3286	Fluoranthene	< 0.5	0.5	ug/l
3287	Pyrene	< 2.	2.	ug/l
3288	Benzo(a)anthracene	< 0.1	0.1	ug/l
3289	Chrysene	< 1.	1.	ug/l
3290	Benzo(b)fluoranthene	< 0.2	0.2	ug/l
3291	Benzo(k)fluoranthene	< 0.1	0.1	ug/l
3292	Benzo(a)pyrene	< 0.2	0.2	ug/l
3293	Dibenzo(a,h)anthracene	< 0.2	0.2	ug/l
3294	Benzo(g,h,i)perylene	< 0.5	0.5	ug/l
3295	Indeno(1,2,3-cd)pyrene	< 0.5	0.5	ug/l

Questions? Contact your Client Services Representative
De Brooks at (717) 656-2300

Respectfully Submitted
Jenifer E. Hess, B.S.
Group Leader Pesticides/PCBs

MEMBER ACIL
Lancaster Laboratories
2425 New Holland Pike
PO Box 12425
Lancaster, PA 17605-2425
717-656-2300 Fax 717-656-2681

See reverse side for explanation of symbols and abbreviations

Lancaster Laboratories
A division of Thermo Analytical Inc.

LLI Sample No. WW 2695131
Collected: 4/16/97 at 11:30 by CC

Submitted: 4/17/97 Reported: 5/ 1/97
Discard: 5/ 9/97

RB-12 Grab Water Sample

Morgantown Ordnance - Project No. 66473

Account No: 07867
ICF Kaiser Engineers, Inc.
Gateway View Plaza
1600 W. Carson St.
Pittsburgh PA 15219

P.O. 66473
Rel.

CAT NO.	ANALYSIS NAME	AS RECEIVED RESULTS	LIMIT OF QUANTITATION	UNITS
PCBs in Water				
0639	PCB-1016	< 1.	1.	ug/l
0640	PCB-1221	< 1.	1.	ug/l
0641	PCB-1232	< 1.	1.	ug/l
0642	PCB-1242	< 1.	1.	ug/l
0643	PCB-1248	< 1.	1.	ug/l
0644	PCB-1254	< 1.	1.	ug/l
0645	PCB-1260	< 1.	1.	ug/l

Questions? Contact your Client Services Representative
De Brooks at (717) 656-2300

Respectfully Submitted
Jenifer E. Hess, B.S.
Group Leader Pesticides/PCBs

MEMBER ACIL
Lancaster Laboratories
2425 New Holland Pike
PO Box 12425
Lancaster PA 17605-2425
717-656-2300 Fax 717-656-2681

Lancaster Laboratories
A division of Thermo Analytical Inc.

LLI Sample No. WW 2695131
Collected: 4/16/97 at 11:30 by CC

Submitted: 4/17/97 Reported: 5/ 1/97
Discard: 5/ 9/97

RB-12 Grab Water Sample

Morgantown Ordnance - Project No. 66473

Account No: 07867
ICF Kaiser Engineers, Inc.
Gateway View Plaza
1600 W. Carson St.
Pittsburgh PA 15219

P.O. 66473
Rel.

CAT NO.	ANALYSIS NAME	AS RECEIVED RESULTS	LIMIT OF QUANTITATION	UNITS
Base Neutrals				
0689	hexachlorobenzene	< 10.	10.	ug/l

Questions? Contact your Client Services Representative
De Brooks at (717) 656-2300

Respectfully Submitted
Christine M. Ratcliff, B.S.
Senior Chemist, GC/MS

MEMBER ACIL
Lancaster Laboratories
2425 New Holland Pike
PO Box 12425
Lancaster, PA 17605-2425
717-656-2300 Fax 717-656-2681

See reverse side for explanation of symbols and abbreviations

Lancaster Laboratories
A division of Thermo Analytical Inc.

LLI Sample No. WW 2695131
Collected: 4/16/97 at 11:30 by CC

Submitted: 4/17/97 Reported: 5/ 1/97
Discard: 5/ 9/97

RB-12 Grab Water Sample

Morgantown Ordnance - Project No. 66473

Account No: 07867
ICF Kaiser Engineers, Inc.
Gateway View Plaza
1600 W. Carson St.
Pittsburgh PA 15219

P.O. 66473
Rel.

CAT NO.	ANALYSIS NAME	AS RECEIVED RESULTS	LIMIT OF QUANTITATION	UNITS
Base Neutrals (cont)				

Questions? Contact your Client Services Representative
De Brooks at (717) 656-2300

Respectfully Submitted
Christine M. Ratcliff, B.S.
Senior Chemist, GC/MS

MEMBER ACIL
Lancaster Laboratories
2425 New Holland Pike
PO Box 12425
Lancaster, PA 17605-2425
717-656-2300 Fax 717-656-2681

See reverse side for explanation of symbols and abbreviations

Analysis Report

Lancaster Laboratories
A division of Thermo Analytical Inc.

LLI Sample No. WW 2699578
Collected: 4/24/97 at 10:30 by MPR

Submitted: 4/25/97 Reported: 4/30/97
Discard: 5/15/97

RB-13 Water Sample

Morgantown Ordnance Works Project No. 70043

Account No: 07867
ICF Kaiser Engineers, Inc.
Gateway View Plaza
1600 W. Carson St.
Pittsburgh PA 15219

P.O. 70043
Rel.

CAT NO.	ANALYSIS NAME	AS RECEIVED RESULTS	LIMIT OF QUANTITATION	UNITS
0255	Lead	< 0.10	0.10	mg/l
0259	Mercury	< 0.00020	0.00020	mg/l
1861	PAH's in Water			See Page 2

1 COPY TO ICF Kaiser Engineers, Inc. ATTN: Mr. Doug Taylor

Questions? Contact your Client Services Representative
De Brooks at (717) 656-2300
08:40:41 D 0001 1 130462 562364
320 0.00 00029106 ASR000

Respectfully Submitted
Ramona V. Layman
Manager, Metals/Leachates

MEMBER ACIL
Lancaster Laboratories
2425 New Holland Pike
PO Box 12425
Lancaster, PA 17605-2425
717-656-2300 Fax 717-656-2681

See reverse side for explanation of symbols and abbreviations

Lancaster Laboratories
A division of Thermo Analytical Inc.

LLI Sample No. WW 2699578
Collected: 4/24/97 at 10:30 by MPR

Submitted: 4/25/97 Reported: 4/30/97
Discard: 5/15/97

RB-13 Water Sample

Morgantown Ordnance Works Project No. 70043

Account No: 07867
ICF Kaiser Engineers, Inc.
Gateway View Plaza
1600 W. Carson St.
Pittsburgh PA 15219

P.O. 70043
Rel.

CAT NO.	ANALYSIS NAME	AS RECEIVED RESULTS	LIMIT OF QUANTITATION	UNITS
PAH's in Water				
3280	Naphthalene	< 10.	10.	ug/l
3281	Acenaphthylene	< 20.	20.	ug/l
3282	Acenaphthene	< 20.	20.	ug/l
3283	Fluorene	< 2.0	2.0	ug/l
3284	Phenanthrene	< 2.0	2.0	ug/l
3285	Anthracene	< 1.0	1.0	ug/l
3286	Fluoranthene	< 0.50	0.50	ug/l
3287	Pyrene	< 2.0	2.0	ug/l
3288	Benzo(a)anthracene	< 0.10	0.10	ug/l
3289	Chrysene	< 1.0	1.0	ug/l
3290	Benzo(b)fluoranthene	< 0.20	0.20	ug/l
3291	Benzo(k)fluoranthene	< 0.10	0.10	ug/l
3292	Benzo(a)pyrene	< 0.20	0.20	ug/l
3293	Dibenzo(a,h)anthracene	< 0.20	0.20	ug/l
3294	Benzo(g,h,i)perylene	< 0.50	0.50	ug/l
3295	Indeno(1,2,3-cd)pyrene	< 0.50	0.50	ug/l

Questions? Contact your Client Services Representative
De Brooks at (717) 656-2300

Respectfully Submitted
Jenifer E. Hess, B.S.
Group Leader Pesticides/PCBs

MEMBER ACIL
Lancaster Laboratories
2425 New Holland Pike
PO Box 12425
Lancaster, PA 17605-2425
717-656-2300 Fax 717-656-2681

Analysis Report

Lancaster Laboratories
A division of Thermo Analytical Inc.

LLI Sample No. SW 2699571
Collected: 4/24/97 at 13:10 by MP

Submitted: 4/25/97 Reported: 4/30/97
Discard: 5/15/97

MOW-GB-264 (C-SS-8 Base) Composite Soil Sample

Morgantown Ordnance Works Project No. 70043

Account No: 07867
ICF Kaiser Engineers, Inc.
Gateway View Plaza
1600 W. Carson St.
Pittsburgh PA 15219

P.O. 70043
Rel.

CAT NO.	ANALYSIS NAME	AS RECEIVED RESULTS	AS RECEIVED LIMIT OF QUANTITATION	AS RECEIVED UNITS	DRY WEIGHT RESULTS	DRY WEIGHT LIMIT OF QUANTITATION
1862	PAH's in Solids			See Page 2		
2111	Moisture	14.7	0.50	% by wt.		

"Moisture" represents the loss in weight of the sample after drying with an infrared lamp at 150 degrees Celsius.

1 COPY TO ICF Kaiser Engineers, Inc. ATTN: Mr. Doug Taylor

Questions? Contact your Client Services Representative
De Brooks at (717) 656-2300
08:38:33 D 0001 10 130462 562362
320 0.00 00041688 ASR000

Respectfully Submitted
Ramona V. Layman
Manager, Metals/Leachates

MEMBER ACIL
Lancaster Laboratories
2425 New Holland Pike
PO Box 12425
Lancaster PA 17605-2425
717-656-2300 Fax 717-656-2681

See reverse side for explanation of symbols and abbreviations

Lancaster Laboratories
A division of Thermo Analytical Inc.

LLI Sample No. SW 2699571
Collected: 4/24/97 at 13:10 by MP

Submitted: 4/25/97 Reported: 4/30/97
Discard: 5/15/97

MOW-GB-264 (C-SS-8 Base) Composite Soil Sample

Morgantown Ordnance Works Project No. 70043

Account No: 07867
ICF Kaiser Engineers, Inc.
Gateway View Plaza
1600 W. Carson St.
Pittsburgh PA 15219

P.O. 70043
Rel.

CAT NO.	ANALYSIS NAME	AS RECEIVED RESULTS	AS RECEIVED LIMIT OF QUANTITATION	UNITS	DRY WEIGHT RESULTS	DRY WEIGHT LIMIT OF QUANTITATION
PAH's in Solids						
3296	Naphthalene	< 3,400.	3,400.	ug/kg	< 3,900.	3,900.
3297	Acenaphthylene	< 3,400.	3,400.	ug/kg	< 3,900.	3,900.
3298	Acenaphthene	< 3,400.	3,400.	ug/kg	< 3,900.	3,900.
3299	Fluorene	< 3,400.	3,400.	ug/kg	< 3,900.	3,900.
3300	Phenanthrene	1,450.	840.	ug/kg	1,700.	980.
3301	Anthracene	< 840.	840.	ug/kg	< 980.	980.
3302	Fluoranthene	4,170.	340.	ug/kg	4,890.	390.
3303	Pyrene	2,370.	340.	ug/kg	2,780.	390.
3304	Benzo(a)anthracene	1,960.	15.	ug/kg	2,300.	18.
3305	Chrysene	1,900.	150.	ug/kg	2,220.	180.
3306	Benzo(b)fluoranthene	1,550.	67.	ug/kg	1,820.	79.
3307	Benzo(k)fluoranthene	1,010.	67.	ug/kg	1,190.	79.
3308	Benzo(a)pyrene	1,860.	67.	ug/kg	2,190.	79.
3309	Dibenzo(a,h)anthracene	234.	67.	ug/kg	275.	79.
3310	Benzo(g,h,i)perylene	< 4,200.	4,200.	ug/kg	< 4,900.	4,900.
3311	Indeno(1,2,3-cd)pyrene	1,950.	170.	ug/kg	2,290.	200.

Due to interfering peaks on the chromatogram, the values reported represent the lowest quantitation limits obtainable.

Questions? Contact your Client Services Representative
De Brooks at (717) 656-2300

Respectfully Submitted
Jenifer E. Hess, B.S.
Group Leader Pesticides/PCBs

MEMBER ACIL
Lancaster Laboratories
2425 New Holland Pike
PO Box 12425
Lancaster, PA 17605-2425
717-656-2300 Fax 717-656-2681

See reverse side for explanation of symbols and abbreviations

Analysis Report

Lancaster Laboratories
A division of Thermo Analytical Inc.

LLI Sample No. SW 2699572
Collected: 4/24/97 at 13:50 by MP

Submitted: 4/25/97 Reported: 4/30/97
Discard: 5/15/97

MOW-3-265 (NW Wall N. Blue Stain Area) Composite
Soil Sample
Morgantown Ordnance Works Project No. 70043

Account No: 07867
ICF Kaiser Engineers, Inc.
Gateway View Plaza
1600 W. Carson St.
Pittsburgh PA 15219

P.O. 70043
Rel.

CAT NO.	ANALYSIS NAME	AS RECEIVED RESULTS	AS RECEIVED LIMIT OF QUANTITATION	UNITS	DRY WEIGHT RESULTS	DRY WEIGHT LIMIT OF QUANTITATION
0155	Lead	11.7	9.9	mg/kg	13.	11.
0159	Mercury	0.16	0.10	mg/kg	0.19	0.12
1862	PAH's in Solids			See Page 2		
2111	Moisture	13.1	0.50	% by wt.		

"Moisture" represents the loss in weight of the sample after drying with an infrared lamp at 150 degrees Celsius.

1 COPY TO ICF Kaiser Engineers, Inc. ATTN: Mr. Doug Taylor

Questions? Contact your Client Services Representative
De Brooks at (717) 656-2300
08:38:55 D 0001 10 130462 562362
320 0.00 00051549 ASR000

Respectfully Submitted
Ramona V. Layman
Manager, Metals/Leachates

MEMBER ACIL
Lancaster Laboratories
2425 New Holland Pike
PO Box 12425
Lancaster, PA 17605-2425
717-656-2300 Fax 717-656-2681

See reverse side for explanation of symbols and abbreviations

Lancaster Laboratories
A division of Thermo Analytical Inc.

LLI Sample No. SW 2699572
Collected: 4/24/97 at 13:50 by MP

Submitted: 4/25/97 Reported: 4/30/97
Discard: 5/15/97

MOW-3-265 (NW Wall N. Blue Stain Area) Composite
Soil Sample
Morgantown Ordnance Works Project No. 70043

Account No: 07867
ICF Kaiser Engineers, Inc.
Gateway View Plaza
1600 W. Carson St.
Pittsburgh PA 15219

P.O. 70043
Rel.

CAT NO.	ANALYSIS NAME	AS RECEIVED RESULTS	AS RECEIVED LIMIT OF QUANTITATION	UNITS	DRY WEIGHT RESULTS	DRY WEIGHT LIMIT OF QUANTITATION
PAH's in Solids						
3296	Naphthalene	< 3,400.	3,400.	ug/kg	< 3,900.	3,900.
3297	Acenaphthylene	< 3,400.	3,400.	ug/kg	< 3,900.	3,900.
3298	Acenaphthene	< 3,400.	3,400.	ug/kg	< 3,900.	3,900.
3299	Fluorene	< 3,400.	3,400.	ug/kg	< 3,900.	3,900.
3300	Phenanthrene	3,480.	840.	ug/kg	4,010.	960.
3301	Anthracene	1,170.	840.	ug/kg	1,340.	960.
3302	Fluoranthene	4,300.	1,700.	ug/kg	5,000.	1,900.
3303	Pyrene	3,100.	1,700.	ug/kg	3,600.	1,900.
3304	Benzo(a)anthracene †	2,680.	75.	ug/kg	3,080.	86.
3305	Chrysene †	2,460.	750.	ug/kg	2,830.	860.
3306	Benzo(b)fluoranthene †	1,700.	170.	ug/kg	1,960.	190.
3307	Benzo(k)fluoranthene †	1,200.	170.	ug/kg	1,380.	190.
3308	Benzo(a)pyrene †	2,800.	170.	ug/kg	3,220.	190.
3309	Dibenzo(a,h)anthracene †	490.	170.	ug/kg	570.	190.
3310	Benzo(g,h,i)perylene	< 4,700.	4,700.	ug/kg	< 5,400.	5,400.
3311	Indeno(1,2,3-cd)pyrene †	2,540.	420.	ug/kg	2,930.	480.

Due to interfering peaks on the chromatogram, the values reported represent the lowest quantitation limits obtainable.

Questions? Contact your Client Services Representative
De Brooks at (717) 656-2300

Respectfully Submitted
Jenifer E. Hess, B.S.
Group Leader Pesticides/PCBs

MEMBER ACIL
Lancaster Laboratories
2425 New Holland Pike
PO Box 12425
Lancaster, PA 17605-2425
717-656-2300 Fax 717-656-2681

See reverse side for explanation of symbols and abbreviations

Analysis Report

ORIGINAL (Red)

Lancaster Laboratories
A division of Thermo Analytical Inc.

LLI Sample No. SW 2699573
Collected: 4/24/97 at 14:10 by MP

Submitted: 4/25/97 Reported: 4/30/97
Discard: 5/15/97

MOW-3-266 (SW Wall N. Blue Stain Area) Composite
Soil Sample
Morgantown Ordnance Works Project No. 70043

Account No: 07867
ICF Kaiser Engineers, Inc.
Gateway View Plaza
1600 W. Carson St.
Pittsburgh PA 15219

P.O. 70043
Rel.

CAT NO.	ANALYSIS NAME	AS RECEIVED RESULTS	AS RECEIVED LIMIT OF QUANTITATION	UNITS	DRY WEIGHT RESULTS	DRY WEIGHT LIMIT OF QUANTITATION
0155	Lead	24.	10.	mg/kg	26.	11.
0159	Mercury	0.61	0.10	mg/kg	0.68	0.11
1862	PAH's in Solids			See Page 2		
2111	Moisture	10.7	0.50	% by wt.		

"Moisture" represents the loss in weight of the sample after drying with an infrared lamp at 150 degrees Celsius.

1 COPY TO ICF Kaiser Engineers, Inc. ATTN: Mr. Doug Taylor

Questions? Contact your Client Services Representative
De Brooks at (717) 656-2300
08:39:11 D 0001 10 130462 562362
320 0.00 00051549 ASR000

Respectfully Submitted
Ramona V. Layman
Manager, Metals/Leachates

MEMBER ACIL
Lancaster Laboratories
2425 New Holland Pike
PO Box 12425
Lancaster, PA 17605-2425
717-656-2300 Fax 717-656-2681

See reverse side for explanation of symbols and abbreviations

Lancaster Laboratories
A division of Thermo Analytical Inc.

LLI Sample No. SW 2699573
Collected: 4/24/97 at 14:10 by MP

Submitted: 4/25/97 Reported: 4/30/97
Discard: 5/15/97

MOW-3-266 (SW Wall N. Blue Stain Area) Composite
Soil Sample
Morgantown Ordnance Works Project No. 70043

Account No: 07867
ICF Kaiser Engineers, Inc.
Gateway View Plaza
1600 W. Carson St.
Pittsburgh PA 15219

P.O. 70043
Rel.

CAT NO.	ANALYSIS NAME	AS RECEIVED RESULTS	AS RECEIVED LIMIT OF QUANTITATION	AS RECEIVED UNITS	DRY WEIGHT RESULTS	DRY WEIGHT LIMIT OF QUANTITATION
	PAH's in Solids					
3296	Naphthalene	< 3,400.	3,400.	ug/kg	< 3,800.	3,800.
3297	Acenaphthylene	< 3,400.	3,400.	ug/kg	< 3,800.	3,800.
3298	Acenaphthene	< 3,400.	3,400.	ug/kg	< 3,800.	3,800.
3299	Fluorene	< 3,400.	3,400.	ug/kg	< 3,800.	3,800.
3300	Phenanthrene	< 840.	840.	ug/kg	< 940.	940.
3301	Anthracene	< 840.	840.	ug/kg	< 940.	940.
3302	Fluoranthene	1,280.	340.	ug/kg	1,430.	380.
3303	Pyrene	760.	340.	ug/kg	850.	380.
3304	Benzo(a)anthracene	797.	15.	ug/kg	893.	17.
3305	Chrysene	810.	150.	ug/kg	910.	170.
3306	Benzo(b)fluoranthene	667.	34.	ug/kg	747.	38.
3307	Benzo(k)fluoranthene	430.	67.	ug/kg	482.	75.
3308	Benzo(a)pyrene	846.	67.	ug/kg	947.	75.
3309	Dibenzo(a,h)anthracene	111.	67.	ug/kg	124.	75.
3310	Benzo(g,h,i)perylene	< 800.	800.	ug/kg	< 900.	900.
3311	Indeno(1,2,3-cd)pyrene	950.	170.	ug/kg	1,060.	190.

Due to interfering peaks on the chromatogram, the values reported represent the lowest quantitation limits obtainable.

Questions? Contact your Client Services Representative
De Brooks at (717) 656-2300

Respectfully Submitted
Jenifer E. Hess, B.S.
Group Leader Pesticides/PCBs

MEMBER ACIL
Lancaster Laboratories
2425 New Holland Pike
PO Box 12425
Lancaster, PA 17605-2425
717-656-2300 Fax 717-656-2681

See reverse side for explanation of symbols and abbreviations

Analysis Report

Lancaster Laboratories
A division of Thermo Analytical Inc.

LLI Sample No. SW 2699574
Collected: 4/24/97 at 14:20 by MP

Submitted: 4/25/97 Reported: 4/30/97
Discard: 5/15/97

MOW-3-267 (SE Wall N. Blue Stain Area) Composite
Soil Sample
Morgantown Ordnance Works Project No. 70043

Account No: 07867
ICF Kaiser Engineers, Inc.
Gateway View Plaza
1600 W. Carson St.
Pittsburgh PA 15219

P.O. 70043
Rel.

CAT NO.	ANALYSIS NAME	AS RECEIVED RESULTS	AS RECEIVED LIMIT OF QUANTITATION	UNITS	DRY WEIGHT RESULTS	DRY WEIGHT LIMIT OF QUANTITATION
0155	Lead	< 10.	10.	mg/kg	< 11.	11.
0159	Mercury	< 0.10	0.10	mg/kg	< 0.11	0.11
1862	PAH's in Solids			See Page 2		
2111	Moisture	9.80	0.50	% by wt.		

"Moisture" represents the loss in weight of the sample after drying with an infrared lamp at 150 degrees Celsius.

1 COPY TO ICF Kaiser Engineers, Inc. ATTN: Mr. Doug Taylor

Questions? Contact your Client Services Representative
De Brooks at (717) 656-2300
08:39:28 D 0001 10 130462 562362
320 0.00 00051549 ASR000

Respectfully Submitted
Ramona V. Layman
Manager, Metals/Leachates

MEMBER ACIL
Lancaster Laboratories
2425 New Holland Pike
PO Box 12425
Lancaster, PA 17605-2425
717-656-2300 Fax 717-656-2681

See reverse side for explanation of symbols and abbreviations

Lancaster Laboratories
A division of Thermo Analytical Inc.

LLI Sample No. SW 2699574
Collected: 4/24/97 at 14:20 by MP

Submitted: 4/25/97 Reported: 4/30/97
Discard: 5/15/97

MOW-3-267 (SE Wall N. Blue Stain Area) Composite
Soil Sample
Morgantown Ordnance Works Project No. 70043

Account No: 07867
ICF Kaiser Engineers, Inc.
Gateway View Plaza
1600 W. Carson St.
Pittsburgh PA 15219

P.O. 70043
Rel.

CAT NO.	ANALYSIS NAME	AS RECEIVED RESULTS	AS RECEIVED LIMIT OF QUANTITATION	UNITS	DRY WEIGHT RESULTS	DRY WEIGHT LIMIT OF QUANTITATION
PAH's in Solids						
3296	Naphthalene	< 670.	670.	ug/kg	< 740.	740.
3297	Acenaphthylene	< 670.	670.	ug/kg	< 740.	740.
3298	Acenaphthene	< 670.	670.	ug/kg	< 740.	740.
3299	Fluorene	< 670.	670.	ug/kg	< 740.	740.
3300	Phenanthrene	< 170.	170.	ug/kg	< 190.	190.
3301	Anthracene	< 170.	170.	ug/kg	< 190.	190.
3302	Fluoranthene	< 67.	67.	ug/kg	< 74.	74.
3303	Pyrene	< 67.	67.	ug/kg	< 74.	74.
3304	Benzo(a)anthracene	28.8	3.0	ug/kg	31.9	3.3
3305	Chrysene	41.	30.	ug/kg	45.	33.
3306	Benzo(b)fluoranthene	< 34.	34.	ug/kg	< 38.	38.
3307	Benzo(k)fluoranthene	19.1	6.7	ug/kg	21.2	7.4
3308	Benzo(a)pyrene	36.6	6.7	ug/kg	40.5	7.4
3309	Dibenzo(a,h)anthracene	< 6.7	6.7	ug/kg	< 7.4	7.4
3310	Benzo(g,h,i)perylene	< 17.	17.	ug/kg	< 19.	19.
3311	Indeno(1,2,3-cd)pyrene	40.	17.	ug/kg	45.	19.

Due to interfering peaks on the chromatogram, the values reported represent the lowest quantitation limits obtainable.

Questions? Contact your Client Services Representative
De Brooks at (717) 656-2300

Respectfully Submitted
Jenifer E. Hess, B.S.
Group Leader Pesticides/PCBs

MEMBER ACIL
Lancaster Laboratories
2425 New Holland Pike
PO Box 12425
Lancaster, PA 17605-2425
717-656-2300 Fax 717-656-2681

See reverse side for explanation of symbols and abbreviations

Analysis Report

Lancaster Laboratories
A division of Thermo Analytical Inc.

LLI Sample No. SW 2699575
Collected: 4/24/97 at 14:40 by MP

Submitted: 4/25/97 Reported: 4/30/97
Discard: 5/15/97

MOW-3B-268 (Base N. Blue Stain Area) Composite
Soil Sample
Morgantown Ordnance Works Project No. 70043

Account No: 07867
ICF Kaiser Engineers, Inc.
Gateway View Plaza
1600 W. Carson St.
Pittsburgh PA 15219

P.O. 70043
Rel.

CAT NO.	ANALYSIS NAME	AS RECEIVED RESULTS	AS RECEIVED LIMIT OF QUANTITATION	UNITS	DRY WEIGHT RESULTS	DRY WEIGHT LIMIT OF QUANTITATION
0155	Lead	11.	10.	mg/kg	12.	11.
0159	Mercury	0.28	0.10	mg/kg	0.31	0.11
1862	PAH's in Solids			See Page 2		
2111	Moisture	11.0	0.50	% by wt.		

"Moisture" represents the loss in weight of the sample after drying with an infrared lamp at 150 degrees Celsius.

1 COPY TO ICF Kaiser Engineers, Inc. ATTN: Mr. Doug Taylor

Questions? Contact your Client Services Representative
De Brooks at (717) 656-2300
08:39:46 D 0001 10 130462 562362
320 0.00 00051549 ASR000

Respectfully Submitted
Ramona V. Layman
Manager, Metals/Leachates

MEMBER ACIL
Lancaster Laboratories
2425 New Holland Pike
PO Box 12425
Lancaster, PA 17605-2425
717-656-2300 Fax 717-656-2681

See reverse side for explanation of symbols and abbreviations

Lancaster Laboratories
A division of Thermo Analytical Inc.

LLI Sample No. SW 2699575
Collected: 4/24/97 at 14:40 by MP

Submitted: 4/25/97 Reported: 4/30/97
Discard: 5/15/97

MOW-3B-268 (Base N. Blue Stain Area) Composite
Soil Sample
Morgantown Ordnance Works Project No. 70043

Account No: 07867
ICF Kaiser Engineers, Inc.
Gateway View Plaza
1600 W. Carson St.
Pittsburgh PA 15219

P.O. 70043
Rel.

CAT NO.	ANALYSIS NAME	AS RECEIVED RESULTS	AS RECEIVED LIMIT OF QUANTITATION	AS RECEIVED UNITS	DRY WEIGHT RESULTS	DRY WEIGHT LIMIT OF QUANTITATION
PAH's in Solids						
3296	Naphthalene	< 670.	670.	ug/kg	< 750.	750.
3297	Acenaphthylene	< 670.	670.	ug/kg	< 750.	750.
3298	Acenaphthene	< 670.	670.	ug/kg	< 750.	750.
3299	Fluorene	< 670.	670.	ug/kg	< 750.	750.
3300	Phenanthrene	< 170.	170.	ug/kg	< 190.	190.
3301	Anthracene	< 170.	170.	ug/kg	< 190.	190.
3302	Fluoranthene	103.	67.	ug/kg	116.	75.
3303	Pyrene	< 67.	67.	ug/kg	< 75.	75.
3304	Benzo(a)anthracene	77.2	3.0	ug/kg	86.8	3.4
3305	Chrysene	86.	30.	ug/kg	97.	34.
3306	Benzo(b)fluoranthene	98.6	6.7	ug/kg	111.	7.5
3307	Benzo(k)fluoranthene	55.6	6.7	ug/kg	62.5	7.5
3308	Benzo(a)pyrene	109.	6.7	ug/kg	123.	7.5
3309	Dibenzo(a,h)anthracene	17.9	6.7	ug/kg	20.1	7.5
3310	Benzo(g,h,i)perylene	< 130.	130.	ug/kg	< 150.	150.
3311	Indeno(1,2,3-cd)pyrene	143.	17.	ug/kg	160.	19.

Due to interfering peaks on the chromatogram, the values reported represent the lowest quantitation limits obtainable.

Questions? Contact your Client Services Representative
De Brooks at (717) 656-2300

Respectfully Submitted
Jenifer E. Hess, B.S.
Group Leader Pesticides/PCBs

MEMBER ACIL
Lancaster Laboratories
2425 New Holland Pike
PO Box 12425
Lancaster, PA 17605-2425
717-656-2300 Fax 717-656-2681

See reverse side for explanation of symbols and abbreviations

Lancaster Laboratories
A division of Thermo Analytical Inc.

LLI Sample No. SW 2699576
Collected: 4/24/97 at 14:40 by MP

Submitted: 4/25/97 Reported: 4/30/97
Discard: 5/15/97

MOW-3B-268D (Base N. Blue Stain Area) Composite
Soil Sample
Morgantown Ordnance Works Project No. 70043

Account No: 07867
ICF Kaiser Engineers, Inc.
Gateway View Plaza
1600 W. Carson St.
Pittsburgh PA 15219

P.O. 70043
Rel.

CAT NO.	ANALYSIS NAME	AS RECEIVED RESULTS	AS RECEIVED LIMIT OF QUANTITATION	UNITS	DRY WEIGHT RESULTS	DRY WEIGHT LIMIT OF QUANTITATION
0155	Lead	< 10.	10.	mg/kg	< 11.	11.
0159	Mercury	0.13	0.10	mg/kg	0.15	0.11
1862	PAH's in Solids			See Page 2		
2111	Moisture	11.4	0.50	% by wt.		

"Moisture" represents the loss in weight of the sample after drying with an infrared lamp at 150 degrees Celsius.

1 COPY TO ICF Kaiser Engineers, Inc. ATTN: Mr. Doug Taylor

Questions? Contact your Client Services Representative
De Brooks at (717) 656-2300
08:40:07 D 0001 10 130462 562362
320 0.00 00051549 ASR000

Respectfully Submitted
Ramona V. Layman
Manager, Metals/Leachates

MEMBER ACIL
Lancaster Laboratories
2425 New Holland Pike
PO Box 12425
Lancaster, PA 17605-2425
717-656-2300 Fax 717-656-2681

See reverse side for explanation of symbols and abbreviations

Lancaster Laboratories
A division of Thermo Analytical Inc.

LLI Sample No. SW 2699576
Collected: 4/24/97 at 14:40 by MP

Submitted: 4/25/97 Reported: 4/30/97
Discard: 5/15/97

MOW-3B-268D (Base N. Blue Stain Area) Composite
Soil Sample
Morgantown Ordnance Works Project No. 70043

Account No: 07867
ICF Kaiser Engineers, Inc.
Gateway View Plaza
1600 W. Carson St.
Pittsburgh PA 15219

P.O. 70043
Rel.

CAT NO.	ANALYSIS NAME	AS RECEIVED RESULTS	AS RECEIVED LIMIT OF QUANTITATION	AS RECEIVED UNITS	DRY WEIGHT RESULTS	DRY WEIGHT LIMIT OF QUANTITATION
PAH's in Solids						
3296	Naphthalene	< 670.	670.	ug/kg	< 760.	760.
3297	Acenaphthylene	< 670.	670.	ug/kg	< 760.	760.
3298	Acenaphthene	< 670.	670.	ug/kg	< 760.	760.
3299	Fluorene	< 670.	670.	ug/kg	< 760.	760.
3300	Phenanthrene	< 170.	170.	ug/kg	< 190.	190.
3301	Anthracene	< 170.	170.	ug/kg	< 190.	190.
3302	Fluoranthene	80.	67.	ug/kg	90.	76.
3303	Pyrene	< 67.	67.	ug/kg	< 76.	76.
3304	Benzo(a)anthracene	58.5	3.0	ug/kg	66.0	3.4
3305	Chrysene	69.	30.	ug/kg	78.	34.
3306	Benzo(b)fluoranthene	85.2	6.7	ug/kg	96.1	7.6
3307	Benzo(k)fluoranthene	45.2	6.7	ug/kg	51.0	7.6
3308	Benzo(a)pyrene	86.1	6.7	ug/kg	97.2	7.6
3309	Dibenzo(a,h)anthracene	13.8	6.7	ug/kg	15.6	7.6
3310	Benzo(g,h,i)perylene	< 110.	110.	ug/kg	< 120.	120.
3311	Indeno(1,2,3-cd)pyrene	113.	17.	ug/kg	127.	19.

Due to interfering peaks on the chromatogram, the values reported represent the lowest quantitation limits obtainable.

Questions? Contact your Client Services Representative
De Brooks at (717) 656-2300

Respectfully Submitted
Jenifer E. Hess, B.S.
Group Leader Pesticides/PCBs

MEMBER ACIL
Lancaster Laboratories
2425 New Holland Pike
PO Box 12425
Lancaster, PA 17605-2425
717-656-2300 Fax 717-656-2681

See reverse side for explanation of symbols and abbreviations

ICF KAISER
ICF KAISER ENGINEERS GROUP

ICF Kaiser Engineers, Inc.
Gateway View Plaza
1600 West Carson Street
Pittsburgh, PA 15219-1031
412/497-2000 Fax 412/497-2212

Project File

May 23, 1997

Ms. Melissa Whittington, RPM
General Remedial Section
USEPA Region III, 3HW23
841 Chestnut Building
Philadelphia, PA 19107

Subject: **Response Action at Morgantown Ordnance Works OU-2, Morgantown, WV**
Bi-Weekly Progress Report for the Period May 12 to May 23, 1997

Dear Ms. Whittington:

At the request of the Morgantown PRP Committee ICF Kaiser Engineers, Inc. is submitting the Bi-Weekly Progress report for the above referenced reporting period. This report is being submitted in accordance with the requirements of Section 8.7, of the Administrative Order on Consent for Removal Response Action, Docket No. III-96-68 (the Removal Order). A summary of the work anticipated for the next bi-weekly report is also attached.

Please call me or the Committee (contacts listed below) if you have any questions regarding this report.

Morgantown PRP Committee Contacts

Linda White	Steve Morrow
U.S. Army Corps of Engineers	Olin Corporation
(402) 221-7672	(423) 336-4511

Sincerely,

Charles Haefner, Jr.

Charles Haefner, Jr., P.G.
Remediation Project Manager

cc: Steve Morrow, Olin
John Burns, Olin
Roger Towe, EPES
Michael Stratton, WVA DEP
Linda White, USACOE
Michael Crain, USACOE
Ken Cooper - USACOE
Doug Taylor, ICF Kaiser
OU-1 PRP Group

66473-163-G

BI-WEEKLY REPORT
MAY 12, 1997 TO MAY 23, 1997

OU-2 RESPONSE ACTION
MORGANTOWN ORDNANCE WORKS
MORGANTOWN, WV

A. WORK PERFORMED MAY 12 TO MAY 23, 1997

- The Committee completed backfilling and seeding the excavation around the former Coke Oven foundations (Zones A-F).
- The Committee removed metal/debris from the Crane Alley Sump/Trench.
- The Committee capped, mulched, and seeded the soil excavated from Zones A-F. The soil was staged at the OU-1 landfill.
- The Committee collected discharge water samples from the Modular Tanks containing water pumped out of the Crane Alley Sump/Trench and Pump Pit and the Coke Oven/Coke By-Products pits and sumps. Water samples were obtained when approximately 50,000 gallons were pumped into the Modular Tanks and at the conclusion of pumping. Samples were analyzed for TOC, COD, phenols, oil and grease, benzene, Fe, Pb, Mn, Cu, Zn, Hg and Al, PAHs, PCBs, CN, pH, TSS, flourene, chlorides and ammonia-nitrogen.
- The Committee transported approximately 130 tons of soil/debris from the Utility Corridors at the Coke Oven Area for disposal at Chem Waste Management's Model City, NY Facility.
- The Committee began removal of sediment from the Crane Alley Sump/Trench (non-PCB side).
- The Committee began pumping water from the Quench Tower and Western Sumps.
- The Committee backfilled and seeded the Blue Stained Area excavations.
- The Committee completed sealing of the two northern most Coke Oven Utility Corridors.

B. WORK TO BE PERFORMED MAY 26 TO JUNE 6, 1997

- The Committee will continue pumping water from the Crane Alley Sump/Trench.
- The Committee will clean the Settling Basin Sump located at the southern end of the Crane Alley.
- The Committee will begin stabilizing sediment from the Crane Alley Sump/Trench in preparation for off-Site disposal to Model City, NY.

- The Committee will backfill the Quench Tower and Western Sumps located in the Coke Oven/Coke By-Products Area.

- The Committee will begin to pump water from and clean the Southern Sump (adjacent to GE fenceline).

- The Committee will continue to discharge water from the Modular Tanks into the Monongahela River through the temporary NPDES.

C. SUMMARY OF CONCERNS AND THEIR IMPACT ON RESPONSE ACTION ACTIVITIES.

- Rain has been a slight problem. Areas that have previously been pumped require additional pumping after the rain has ceased. No impact on schedule is expected.

- The Settling Basin at the southern end of the Crane Alley is much larger than was originally believed. A chamber extends beyond the wall of the Main Process Building. The chamber is approximately 20 feet below ground surface, and extends approximately 30 feet south of the current building wall. Details will be provided after the water has been removed from the basin.

D. ANALYTICAL DATA RECEIVED

- Soil confirmation sample results were obtained from the base of the soil excavation of Zones A-F. The results are shown on Figure 3-18 in Attachment A.

- Water samples were obtained from the Modular Tanks. Analytical sample results are included in Attachment A.

E. MODIFICATIONS TO RESPONSE ACTION PLAN

None

ATTACHMENT A

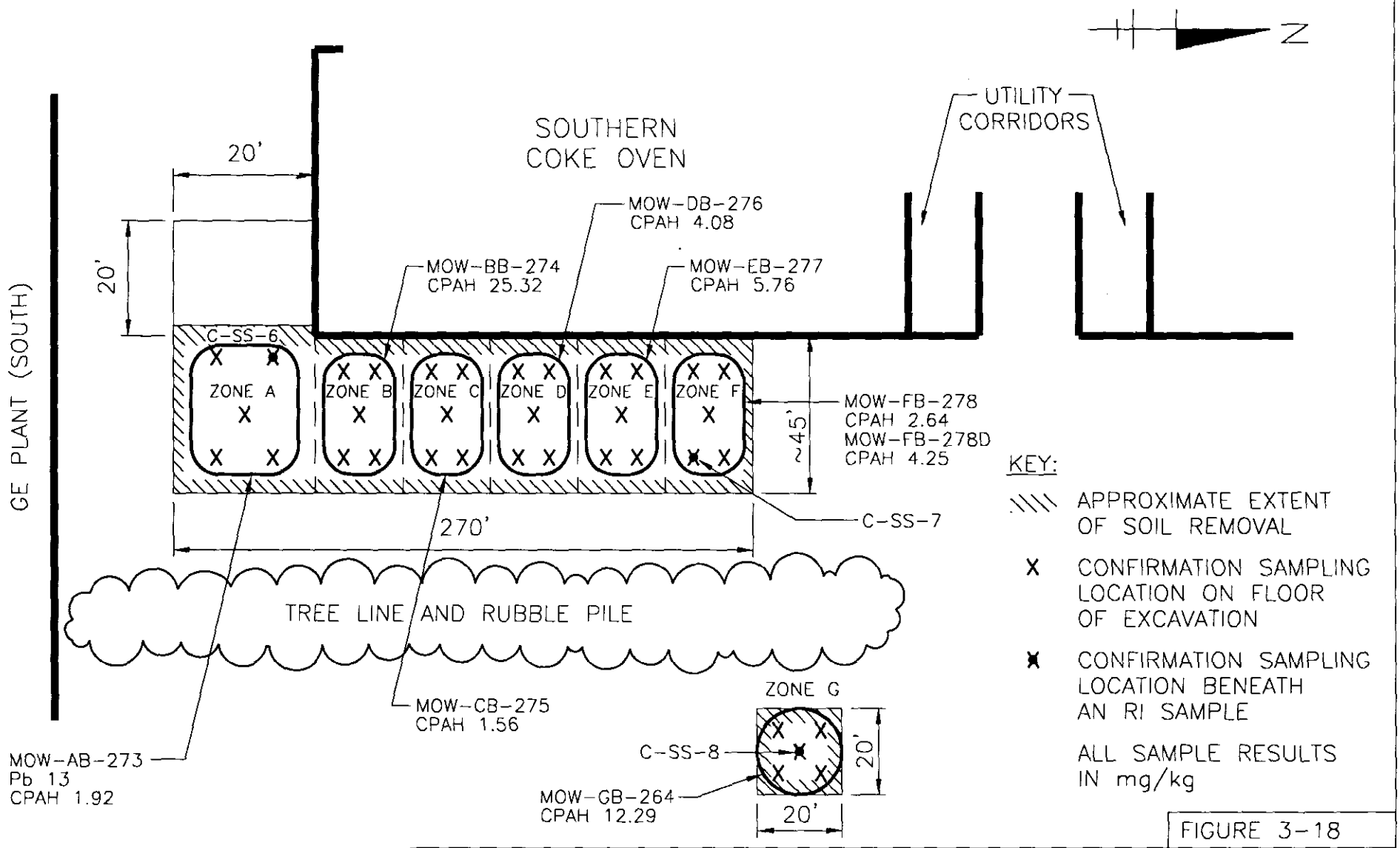

FIGURE 3-18

MORGANTOWN TECHNICAL COMMITTEE MORGANTOWN, WEST VIRGINIA	CONFIRMATION SAMPLE COLLECTION SOIL HOT SPOT EXCAVATION	
ICF KAISER ENGINEERS PITTSBURGH, PA	DATE: 5/16/97	DR.: B. SNYDER
	SCALE: N.T.S.	E/F NO.: 40152052

JOB NO.: 6647300500 PLOT SCALE: 1=1

STARTED ON: 5/16/97 REVISED: 00/00/00

Analysis Report

Lancaster Laboratories
A division of Thermo Analytical Inc.

LLI Sample No. WW 2700444
Collected: 4/25/97 at 11:00 by GM

Submitted: 4/28/97 Reported: 5/ 8/97
Discard: 5/19/97

MOW-042597-M3 Grab Water Sample

Morgantown Ordnance - Project No. 70043500

Account No: 07867
ICF Kaiser Engineers, Inc.
Gateway View Plaza
1600 W. Carson St.
Pittsburgh PA 15219

P.O. 70043500
Rel.

CAT NO.	ANALYSIS NAME	AS RECEIVED RESULTS	LIMIT OF QUANTITATION	UNITS
7043	Aluminum TR	< 0.20	0.20	mg/l
7053	Copper TR	0.0291	0.0040	mg/l
7054	Iron TR	1.19	0.10	mg/l
7055	Lead TR	0.0080	0.0050	mg/l
7058	Manganese TR	1.01	0.0020	mg/l
7072	Zinc TR	0.104	0.020	mg/l
0259	Mercury	0.00031	0.00020	mg/l
1861	PAH's in Water			See Page 2
6030	PCBs in Water		1.0	See Page 3
0539	Benzene	< 1.	1.	ug/l
0553	Base Neutrals			See Page 4
0554	Base Neutrals (cont)			See Page 5
0224	Chloride	18.1	1.0	mg/l
0237	Total Cyanide (water)	0.0083	0.0050	mg/l
0273	Total Organic Carbon	2.9	1.0	mg/l
	The Total Organic Carbon (TOC) result reported above was determined by measuring total carbon by a persulfate digestion/infrared detection method on an acidified sample which has been purged of inorganic carbon using nitrogen. It represents "non-purgeable TOC".			
0434	Phenols (water)	0.0061	0.0050	mg/l
1504	Fluoride	< 0.50	0.50	mg/l
0200	pH	6.57	0.010	
0206	Total Suspended Solids	< 9.0	9.0	mg/l
0231	Oil & Grease	< 6.0	6.0	mg/l
	The blank analyzed with this sample contained 5.8 mg/l of oil and grease. As directed in EPA method 413.1, the data reported above was corrected for the blank value.			
1553	Chemical Oxygen Demand	9.8	8.0	mg/l
6914	Ammonia-Nitrogen	0.26	0.20	mg/l

1 COPY TO ICF Kaiser Engineers, Inc. ATTN: Mr. Doug Taylor

Questions? Contact your Client Services Representative
De Brooks at (717) 656-2300
05:11:11 D 0001 1 130462 562563
320 0.00 00120296 ASR000

Respectfully Submitted
Ramona V. Layman
Manager, Metals/Leachates

MEMBER ACIL
Lancaster Laboratories
2425 New Holland Pike
PO Box 12425
Lancaster, PA 17605-2425
717-656-2300 Fax 717-656-2681

See reverse side for explanation of symbols and abbreviations

Lancaster Laboratories
A division of Thermo Analytical Inc.

LLI Sample No. WW 2700444
Collected: 4/25/97 at 11:00 by GM

Submitted: 4/28/97 Reported: 5/ 8/97
Discard: 5/19/97

MOW-042597-M3 Grab Water Sample

Morgantown Ordnance - Project No. 70043500

Account No: 07867
ICF Kaiser Engineers, Inc.
Gateway View Plaza
1600 W. Carson St.
Pittsburgh PA 15219

P.O. 70043500
Rel.

CAT NO.	ANALYSIS NAME	AS RECEIVED RESULTS	LIMIT OF QUANTITATION	UNITS
PAH's in Water				
3280	Naphthalene	< 9.5	9.5	ug/l
3281	Acenaphthylene	< 19.	19.	ug/l
3282	Acenaphthene	< 19.	19.	ug/l
3283	Fluorene	< 1.9	1.9	ug/l
3284	Phenanthrene	< 1.9	1.9	ug/l
3285	Anthracene	< 1.0	1.0	ug/l
3286	Fluoranthene	< 0.48	0.48	ug/l
3287	Pyrene	< 1.9	1.9	ug/l
3288	Benzo(a)anthracene	< 0.095	0.095	ug/l
3289	Chrysene	< 1.0	1.0	ug/l
3290	Benzo(b)fluoranthene	< 0.19	0.19	ug/l
3291	Benzo(k)fluoranthene	< 0.095	0.095	ug/l
3292	Benzo(a)pyrene	< 0.19	0.19	ug/l
3293	Dibenzo(a,h)anthracene	< 0.19	0.19	ug/l
3294	Benzo(g,h,i)perylene	< 0.48	0.48	ug/l
3295	Indeno(1,2,3-cd)pyrene	< 0.48	0.48	ug/l

Questions? Contact your Client Services Representative
De Brooks at (717) 656-2300

Respectfully Submitted
Jenifer E. Hess, B.S.
Group Leader Pesticides/PCBs

MEMBER ACIL
Lancaster Laboratories
2425 New Holland Pike
PO Box 12425
Lancaster, PA 17605-2425
717-656-2300 Fax: 717-656-2681

See reverse side for explanation of symbols and abbreviations

Lancaster Laboratories
A division of Thermo Analytical Inc.

LLI Sample No. WW 2700444
Collected: 4/25/97 at 11:00 by GM

Submitted: 4/28/97 Reported: 5/ 8/97
Discard: 5/19/97

MOW-042597-M3 Grab Water Sample

Morgantown Ordnance - Project No. 70043500

Account No: 07867
ICF Kaiser Engineers, Inc.
Gateway View Plaza
1600 W. Carson St.
Pittsburgh PA 15219

P.O. 70043500
Rel.

CAT NO.	ANALYSIS NAME	AS RECEIVED RESULTS	LIMIT OF QUANTITATION	UNITS
PCBs in Water				
0639	PCB-1016	< 1.0	1.0	ug/l
0640	PCB-1221	< 1.0	1.0	ug/l
0641	PCB-1232	< 1.0	1.0	ug/l
0642	PCB-1242	< 1.0	1.0	ug/l
0643	PCB-1248	< 1.0	1.0	ug/l
0644	PCB-1254	< 1.0	1.0	ug/l
0645	PCB-1260	< 1.0	1.0	ug/l

Questions? Contact your Client Services Representative
De Brooks at (717) 656-2300

Respectfully Submitted
Jenifer E. Hess, B.S.
Group Leader Pesticides/PCBs

MEMBER ACIL
Lancaster Laboratories
2425 New Holland Pike
PO Box 12425
Lancaster, PA 17605-2425
717-656-2300 Fax: 717-656-2681

See reverse side for explanation of symbols and abbreviations

Lancaster Laboratories
A division of Thermo Analytical Inc.

LLI Sample No. WW 2700444
Collected: 4/25/97 at 11:00 by GM

Submitted: 4/28/97 Reported: 5/ 8/97
Discard: 5/19/97

MOW-042597-M3 Grab Water Sample

Morgantown Ordnance - Project No. 70043500

Account No: 07867
ICF Kaiser Engineers, Inc.
Gateway View Plaza
1600 W. Carson St.
Pittsburgh PA 15219

P.O. 70043500
Rel.

CAT NO.	ANALYSIS NAME	AS RECEIVED RESULTS	LIMIT OF QUANTITATION	UNITS
Base Neutrals				
0689	hexachlorobenzene	< 10.	10.	ug/l

Questions? Contact your Client Services Representative
De Brooks at (717) 656-2300

Respectfully Submitted
Christine M. Ratcliff, B.S.
Senior Chemist, GC/MS

MEMBER ACIL
Lancaster Laboratories
2425 New Holland Pike
PO Box 12425
Lancaster, PA 17605-2425
717-656-2300 Fax: 717-656-2681

See reverse side for explanation of symbols and abbreviations

Lancaster Laboratories
A division of Thermo Analytical Inc.

LLI Sample No. WW 2700444
Collected: 4/25/97 at 11:00 by GM

Submitted: 4/28/97 Reported: 5/ 8/97
Discard: 5/19/97

MOW-042597-M3 Grab Water Sample

Morgantown Ordnance - Project No. 70043500

Account No: 07867
ICF Kaiser Engineers, Inc.
Gateway View Plaza
1600 W. Carson St.
Pittsburgh PA 15219

P.O. 70043500
Rel.

CAT NO.	ANALYSIS NAME	AS RECEIVED RESULTS	LIMIT OF QUANTITATION	UNITS
Base Neutrals (cont)				

Questions? Contact your Client Services Representative
De Brooks at (717) 656-2300

Respectfully Submitted
Christine M. Ratcliff, B.S.
Senior Chemist, GC/MS

MEMBER ACIL
Lancaster Laboratories
2425 New Holland Pike
PO Box 12425
Lancaster, PA 17605-2425
717-656-2300 Fax 717-656-2681

See reverse side for explanation of symbols and abbreviations.

Lancaster Laboratories
A division of Thermo Analytical Inc.

LLI Sample No. WW 2700724
Collected: 4/28/97 at 16:15 by GM

Submitted: 4/29/97 Reported: 5/ 9/97
Discard: 5/20/97

MOW-042897-M4 Grab Water Sample

Morgantown Ordnance - Project No. 7004350000

Account No: 07867
ICF Kaiser Engineers, Inc.
Gateway View Plaza
1600 W. Carson St.
Pittsburgh PA 15219

P.O. 7004350000
Rel.

CAT NO.	ANALYSIS NAME	AS RECEIVED RESULTS	LIMIT OF QUANTITATION	UNITS
7043	Aluminum TR	< 0.20	0.20	mg/l
7053	Copper TR	0.0334	0.0040	mg/l
7054	Iron TR	1.32	0.10	mg/l
7055	Lead TR	0.0092	0.0050	mg/l
7058	Manganese TR	0.910	0.0020	mg/l
7072	Zinc TR	0.112	0.020	mg/l
0259	Mercury	0.00095	0.00020	mg/l
1861	PAH's in Water			See Page 2
6030	PCBs in Water			See Page 3
0539	Benzene	< 1.	1.	ug/l
0553	Base Neutrals			See Page 4
0554	Base Neutrals (cont)			See Page 5
0224	Chloride	18.6	1.0	mg/l
0237	Total Cyanide (water)	0.0121	0.0050	mg/l
0273	Total Organic Carbon	3.2	1.0	mg/l
	The Total Organic Carbon (TOC) result reported above was determined by measuring total carbon by a persulfate digestion/infrared detection method on an acidified sample which has been purged of inorganic carbon using nitrogen. It represents "non-purgeable TOC".			
0434	Phenols (water)	< 0.0050	0.0050	mg/l
1504	Fluoride	< 0.50	0.50	mg/l
0200	pH	6.51	0.010	
0206	Total Suspended Solids	13.2	9.0	mg/l
0231	Oil & Grease	< 6.0	6.0	mg/l
	The blank analyzed with this sample contained 2.8 mg/l of oil and grease. As directed in EPA method 413.1, the data reported above was corrected for the blank value.			
1553	Chemical Oxygen Demand	10.3	8.0	mg/l
6914	Ammonia-Nitrogen	< 0.20	0.20	mg/l

1 COPY TO ICF Kaiser Engineers, Inc. ATTN: Mr. Doug Taylor

Questions? Contact your Client Services Representative
De Brooks at (717) 656-2300
04:55:12 0 0001 1 130462 562654
320 0.00 00127474 ASR000

Respectfully Submitted
Ramona V. Layman
Manager, Metals/Leachates

MEMBER ACIL
Lancaster Laboratories
2425 New Holland Pike
PO Box 12425
Lancaster, PA 17605-2425
717-656-2300 Fax: 717-656-2681

Lancaster Laboratories
A division of Thermo Analytical Inc.

LLI Sample No. WW 2700724
Collected: 4/28/97 at 16:15 by GM

Submitted: 4/29/97 Reported: 5/ 9/97
Discard: 5/20/97

MOW-042897-M4 Grab Water Sample

Morgantown Ordnance - Project No. 7004350000

Account No: 07867
ICF Kaiser Engineers, Inc.
Gateway View Plaza
1600 W. Carson St.
Pittsburgh PA 15219

P.O. 7004350000
Rel.

CAT NO.	ANALYSIS NAME	AS RECEIVED RESULTS	LIMIT OF QUANTITATION	UNITS
PAH's in Water				
3280	Naphthalene	< 9.7	9.7	ug/l
3281	Acenaphthylene	< 19.	19.	ug/l
3282	Acenaphthene	< 19.	19.	ug/l
3283	Fluorene	< 1.9	1.9	ug/l
3284	Phenanthrene	< 1.9	1.9	ug/l
3285	Anthracene	< 1.0	1.0	ug/l
3286	Fluoranthene	< 0.49	0.49	ug/l
3287	Pyrene	< 1.9	1.9	ug/l
3288	Benzo(a)anthracene	0.150	0.097	ug/l
3289	Chrysene	< 1.0	1.0	ug/l
3290	Benzo(b)fluoranthene	< 0.19	0.19	ug/l
3291	Benzo(k)fluoranthene	< 0.097	0.097	ug/l
3292	Benzo(a)pyrene	< 0.19	0.19	ug/l
3293	Dibenzo(a,h)anthracene	< 0.19	0.19	ug/l
3294	Benzo(g,h,i)perylene	< 0.49	0.49	ug/l
3295	Indeno(1,2,3-cd)pyrene	< 0.49	0.49	ug/l

Questions? Contact your Client Services Representative
De Brooks at (717) 656-2300

Respectfully Submitted
Jenifer E. Hess, B.S.
Group Leader Pesticides/PCBs

MEMBER ACIL
Lancaster Laboratories
2425 New Holland Pike
PO Box 12425
Lancaster, PA 17605-2425
717-656-2300 Fax 717-656-2681

Lancaster Laboratories
A division of Thermo Analytical Inc.

LLI Sample No. WW 2700724
Collected: 4/28/97 at 16:15 by GM

Submitted: 4/29/97 Reported: 5/ 9/97
Discard: 5/20/97

MOW-042897-M4 Grab Water Sample

Morgantown Ordnance - Project No. 7004350000

Account No: 07867
ICF Kaiser Engineers, Inc.
Gateway View Plaza
1600 W. Carson St.
Pittsburgh PA 15219

P.O. 7004350000
Rel.

CAT NO.	ANALYSIS NAME	AS RECEIVED RESULTS	LIMIT OF QUANTITATION	UNITS
PCBs in Water				
0639	PCB-1016	< 1.0	1.0	ug/l
0640	PCB-1221	< 1.0	1.0	ug/l
0641	PCB-1232	< 1.0	1.0	ug/l
0642	PCB-1242	< 1.0	1.0	ug/l
0643	PCB-1248	< 1.0	1.0	ug/l
0644	PCB-1254	< 1.0	1.0	ug/l
0645	PCB-1260	< 1.0	1.0	ug/l

Questions? Contact your Client Services Representative
De Brooks at (717) 656-2300

Respectfully Submitted
Jenifer E. Hess, B.S.
Group Leader Pesticides/PCBs

MEMBER ACIL
Lancaster Laboratories
2425 New Holland Pike
PO Box 12425
Lancaster, PA 17605-2425
717-656-2300 Fax 717-656-2681

See reverse side for explanation of symbols and abbreviations.

Lancaster Laboratories
A division of Thermo Analytical Inc.

LLI Sample No. WW 2700724
Collected: 4/28/97 at 16:15 by GM

Submitted: 4/29/97 Reported: 5/ 9/97
Discard: 5/20/97

MOW-042897-M4 Grab Water Sample

Morgantown Ordnance - Project No. 7004350000

Account No: 07867
ICF Kaiser Engineers, Inc.
Gateway View Plaza
1600 W. Carson St.
Pittsburgh PA 15219

P.O. 7004350000
Rel.

CAT NO.	ANALYSIS NAME	AS RECEIVED RESULTS	LIMIT OF QUANTITATION	UNITS
Base Neutrals				
0689	hexachlorobenzene	< 10.	10.	ug/l

Questions? Contact your Client Services Representative
De Brooks at (717) 656-2300

Respectfully Submitted
Christine M. Ratcliff, B.S.
Senior Chemist, GC/MS

MEMBER ACIL
Lancaster Laboratories
2425 New Holland Pike
PO Box 12425
Lancaster, PA 17605-2425
717-656-2300 Fax: 717-656-2681

See reverse side for explanation of symbols and abbreviations.

Lancaster Laboratories
A division of Thermo Analytical Inc.

LLI Sample No. WW 2700724
Collected: 4/28/97 at 16:15 by GM

Submitted: 4/29/97 Reported: 5/ 9/97
Discard: 5/20/97

MOW-042897-M4 Grab Water Sample

Morgantown Ordnance - Project No. 7004350000

Account No: 07867
ICF Kaiser Engineers, Inc.
Gateway View Plaza
1600 W. Carson St.
Pittsburgh PA 15219

P.O. 7004350000
Rel.

CAT NO.	ANALYSIS NAME	AS RECEIVED RESULTS	LIMIT OF QUANTITATION	UNITS
Base Neutrals (cont)				

Questions? Contact your Client Services Representative
De Brooks at (717) 656-2300

Respectfully Submitted
Christine M. Ratcliff, B.S.
Senior Chemist, GC/MS

MEMBER ACIL
Lancaster Laboratories
2425 New Holland Pike
PO Box 12425
Lancaster, PA 17605-2425
717-656-2300 Fax 717-656-2681

See reverse side for explanation of symbols and abbreviations

Analysis Report

Lancaster Laboratories
A division of Thermo Analytical Inc.

LLI Sample No. WW 2702223
Collected: 4/30/97 at 12:00 by GM

Submitted: 5/ 1/97 Reported: 5/ 9/97
Discard: 5/17/97

MOW-043097-C5 Grab Water Sample

Morgantown Ordnance - Project No. 70043

Account No: 07867
ICF Kaiser Engineers, Inc.
Gateway View Plaza
1600 W. Carson St.
Pittsburgh PA 15219

P.O. 70043
Rel.

CAT NO.	ANALYSIS NAME	AS RECEIVED RESULTS	LIMIT OF QUANTITATION	UNITS
7043	Aluminum TR	0.33	0.20	mg/l
7053	Copper TR	0.0067	0.0040	mg/l
7054	Iron TR	0.60	0.10	mg/l
7055	Lead TR	0.0140	0.0050	mg/l
7058	Manganese TR	0.0387	0.0020	mg/l
7072	Zinc TR	0.093	0.020	mg/l
0259	Mercury	< 0.00020	0.00020	mg/l
1861	PAH's in Water			See Page 2
6030	PCBs in Water		1.0	See Page 3
0539	Benzene	< 1.	1.	ug/l
0553	Base Neutrals			See Page 4
0554	Base Neutrals (cont)			See Page 5
0224	Chloride	2.6	1.0	mg/l
0237	Total Cyanide (water)	< 0.0050	0.0050	mg/l
0273	Total Organic Carbon	3.2	1.0	mg/l
	The Total Organic Carbon (TOC) result reported above was determined by measuring total carbon by a persulfate digestion/infrared detection method on an acidified sample which has been purged of inorganic carbon using nitrogen. It represents "non-purgeable TOC".			
0434	Phenols (water)	< 0.0050	0.0050	mg/l
1504	Fluoride	< 0.50	0.50	mg/l
0200	pH	7.46	0.010	
0206	Total Suspended Solids	9.2	9.0	mg/l
0231	Oil & Grease	< 6.0	6.0	mg/l
	The blank analyzed with this sample contained 3.2 mg/l of oil and grease. As directed in EPA method 413.1, the data reported above was corrected for the blank value.			
1553	Chemical Oxygen Demand	12.6	8.0	mg/l
6914	Ammonia-Nitrogen	< 0.20	0.20	mg/l

1 COPY TO ICF Kaiser Engineers, Inc. ATTN: Mr. Doug Taylor

Questions? Contact your Client Services Representative
Jill S. Wolgemuth at (717) 656-2300
05:02:01 D 0001 1 130462 562996
320 0.00 00127309 ASR000

Respectfully Submitted
Ramona V. Layman
Manager, Metals/Leachates

MEMBER ACIL
Lancaster Laboratories
2425 New Holland Pike
PO Box 12425
Lancaster, PA 17605-2425
717-656-2300 Fax 717-656-2681

See reverse side for explanation of symbols and abbreviations

Lancaster Laboratories
A division of Thermo Analytical Inc.

LLI Sample No. WW 2702223
Collected: 4/30/97 at 12:00 by GM

Submitted: 5/ 1/97 Reported: 5/ 9/97
Discard: 5/17/97

MOW-043097-C5 Grab Water Sample

Morgantown Ordnance - Project No. 70043

Account No: 07867
ICF Kaiser Engineers, Inc.
Gateway View Plaza
1600 W. Carson St.
Pittsburgh PA 15219

P.O. 70043
Rel.

CAT NO.	ANALYSIS NAME	AS RECEIVED RESULTS	LIMIT OF QUANTITATION	UNITS
PAH's in Water				
3280	Naphthalene	< 10.	10.	ug/l
3281	Acenaphthylene	< 20.	20.	ug/l
3282	Acenaphthene	< 20.	20.	ug/l
3283	Fluorene	< 2.0	2.0	ug/l
3284	Phenanthrene	< 2.0	2.0	ug/l
3285	Anthracene	< 1.0	1.0	ug/l
3286	Fluoranthene	< 0.50	0.50	ug/l
3287	Pyrene	< 2.0	2.0	ug/l
3288	Benzo(a)anthracene	< 0.10	0.10	ug/l
3289	Chrysene	< 1.0	1.0	ug/l
3290	Benzo(b)fluoranthene	< 0.20	0.20	ug/l
3291	Benzo(k)fluoranthene	< 0.10	0.10	ug/l
3292	Benzo(a)pyrene	< 0.20	0.20	ug/l
3293	Dibenzo(a,h)anthracene	< 0.20	0.20	ug/l
3294	Benzo(g,h,i)perylene	< 0.50	0.50	ug/l
3295	Indeno(1,2,3-cd)pyrene	< 0.50	0.50	ug/l

Questions? Contact your Client Services Representative
Jill S. Wolgemuth at (717) 656-2300

Respectfully Submitted
Jenifer E. Hess, B.S.
Group Leader Pesticides/PCBs

MEMBER ACIL
Lancaster Laboratories
2425 New Holland Pike
PO Box 12425
Lancaster, PA 17605-2425
717-656-2300 Fax: 717-656-2681

Lancaster Laboratories
A division of Thermo Analytical Inc.

LLI Sample No. WW 2702223
Collected: 4/30/97 at 12:00 by GM

Submitted: 5/ 1/97 Reported: 5/ 9/97
Discard: 5/17/97

MOW-043097-C5 Grab Water Sample

Morgantown Ordnance - Project No. 70043

Account No: 07867
ICF Kaiser Engineers, Inc.
Gateway View Plaza
1600 W. Carson St.
Pittsburgh PA 15219

P.O. 70043
Rel.

CAT NO.	ANALYSIS NAME	AS RECEIVED RESULTS	LIMIT OF QUANTITATION	UNITS
PCBs in Water				
0639	PCB-1016	< 0.93	0.93	ug/l
0640	PCB-1221	< 0.93	0.93	ug/l
0641	PCB-1232	< 0.93	0.93	ug/l
0642	PCB-1242	< 0.93	0.93	ug/l
0643	PCB-1248	< 0.93	0.93	ug/l
0644	PCB-1254	< 0.93	0.93	ug/l
0645	PCB-1260	< 0.93	0.93	ug/l

Questions? Contact your Client Services Representative
Jill S. Wolgemuth at (717) 656-2300

Respectfully Submitted
Jenifer E. Hess, B.S.
Group Leader Pesticides/PCBs

MEMBER ACIL
Lancaster Laboratories
2425 New Holland Pike
PO Box 12425
Lancaster, PA 17605-2425
717-656-2300 Fax: 717-656-2681

See reverse side for explanation of symbols and abbreviations

Lancaster Laboratories
A division of Thermo Analytical Inc.

LLI Sample No. WW 2702223
Collected: 4/30/97 at 12:00 by GM

Submitted: 5/ 1/97 Reported: 5/ 9/97
Discard: 5/17/97

MOW-043097-C5 Grab Water Sample

Morgantown Ordnance - Project No. 70043

Account No: 07867
ICF Kaiser Engineers, Inc.
Gateway View Plaza
1600 W. Carson St.
Pittsburgh PA 15219

P.O. 70043
Rel.

CAT NO.	ANALYSIS NAME	AS RECEIVED RESULTS	LIMIT OF QUANTITATION	UNITS
Base Neutrals				
0689	hexachlorobenzene	< 9.	9.	ug/l

Questions? Contact your Client Services Representative
Jill S. Wolgemuth at (717) 656-2300

Respectfully Submitted
Christine M. Ratcliff, B.S.
Senior Chemist, GC/MS

MEMBER ACIL
Lancaster Laboratories
2425 New Holland Pike
PO Box 12425
Lancaster, PA 17605-2425
717-656-2300 Fax 717-656-2681

See reverse side for explanation of symbols and abbreviations

Lancaster Laboratories
A division of Thermo Analytical Inc.

LLI Sample No. WW 2702223
Collected: 4/30/97 at 12:00 by GM

Submitted: 5/ 1/97 Reported: 5/ 9/97
Discard: 5/17/97

MOW-043097-C5 Grab Water Sample

Morgantown Ordnance - Project No. 70043

Account No: 07867
ICF Kaiser Engineers, Inc.
Gateway View Plaza
1600 W. Carson St.
Pittsburgh PA 15219

P.O. 70043
Rel.

CAT NO.	ANALYSIS NAME	AS RECEIVED RESULTS	LIMIT OF QUANTITATION	UNITS
Base Neutrals (cont)				

Questions? Contact your Client Services Representative
Jill S. Wolgemuth at (717) 656-2300

Respectfully Submitted
Christine M. Ratcliff, B.S.
Senior Chemist, GC/MS

MEMBER ACIL
Lancaster Laboratories
2425 New Holland Pike
PO Box 12425
Lancaster, PA 17605-2425
717-656-2300 Fax 717-656-2681

See reverse side for explanation of symbols and abbreviations.

Lancaster Laboratories
A division of Thermo Analytical Inc.

LLI Sample No. WW 2703029
Collected: 5/ 1/97 at 14:30 by GM

Submitted: 5/ 2/97 Reported: 5/ 9/97
Discard: 5/17/97

MOW-050197-C6 Grab Water Sample

Morgantown Ordnance - Project No. 7004350000

Account No: 07867
ICF Kaiser Engineers, Inc.
Gateway View Plaza
1600 W. Carson St.
Pittsburgh PA 15219

P.O. 7004350000
Rel.

CAT NO.	ANALYSIS NAME	AS RECEIVED RESULTS	LIMIT OF QUANTITATION	UNITS
7043	Aluminum TR	< 0.20	0.20	mg/l
7053	Copper TR	0.0059	0.0040	mg/l
7054	Iron TR	0.39	0.10	mg/l
7055	Lead TR	0.0109	0.0050	mg/l
7058	Manganese TR	0.0264	0.0020	mg/l
7072	Zinc TR	0.023	0.020	mg/l
0259	Mercury	< 0.00020	0.00020	mg/l
1861	PAH's in Water			See Page 2
6030	PCBs in Water		1.0	See Page 3
0539	Benzene	< 1.	1.	ug/l
0553	Base Neutrals			See Page 4
0554	Base Neutrals (cont)			See Page 5
0224	Chloride	3.0	1.0	mg/l
	The matrix spike and matrix spike duplicate analyzed on the batch associated with this sample had recoveries of 126% and 146%. The acceptance window for this analysis is 75% to 125%. The blank and LCS/LCSD analyzed with the sample were within specifications.			
0237	Total Cyanide (water)	0.0069	0.0050	mg/l
0273	Total Organic Carbon	3.2	1.0	mg/l
	The Total Organic Carbon (TOC) result reported above was determined by measuring total carbon by a persulfate digestion/infrared detection method on an acidified sample which has been purged of inorganic carbon using nitrogen. It represents "non-purgeable TOC".			
0434	Phenols (water)	< 0.0050	0.0050	mg/l
1504	Fluoride	< 0.50	0.50	mg/l
0200	pH	6.51	0.010	
0206	Total Suspended Solids	< 9.0	9.0	mg/l
0231	Oil & Grease	< 6.0	6.0	mg/l
	The blank analyzed with this sample contained 2.7 mg/l of oil and grease. As directed in EPA method 413.1, the data reported above was corrected for the blank value.			
1553	Chemical Oxygen Demand	8.1	8.0	mg/l
6914	Ammonia-Nitrogen	< 0.20	0.20	mg/l

1 COPY TO ICF Kaiser Engineers, Inc. ATTN: Mr. Doug Taylor

Questions? Contact your Client Services Representative
De Brooks at (717) 656-2300
05:06:28 D 0001 1 130462 563193
320 0.00 00123705 ASR000

Respectfully Submitted
Ramona V. Layman
Manager, Metals/Leachates

MEMBER ACIL
Lancaster Laboratories
2425 New Holland Pike
PO Box 12425
Lancaster, PA 17605-2425
717-656-2300 Fax: 717-656-2681

Lancaster Laboratories
A division of Thermo Analytical Inc.

LLI Sample No. WW 2703029
Collected: 5/ 1/97 at 14:30 by GM

Submitted: 5/ 2/97 Reported: 5/ 9/97
Discard: 5/17/97

MOW-050197-C6 Grab Water Sample

Morgantown Ordnance - Project No. 7004350000

Account No: 07867
ICF Kaiser Engineers, Inc.
Gateway View Plaza
1600 W. Carson St.
Pittsburgh PA 15219

P.O. 7004350000
Rel.

CAT NO.	ANALYSIS NAME	AS RECEIVED RESULTS	LIMIT OF QUANTITATION	UNITS
PAH's in Water				
3280	Naphthalene	< 10.	10.	ug/l
3281	Acenaphthylene	< 20.	20.	ug/l
3282	Acenaphthene	< 20.	20.	ug/l
3283	Fluorene	< 2.0	2.0	ug/l
3284	Phenanthrene	< 2.0	2.0	ug/l
3285	Anthracene	< 1.0	1.0	ug/l
3286	Fluoranthene	< 0.50	0.50	ug/l
3287	Pyrene	< 2.0	2.0	ug/l
3288	Benzo(a)anthracene	< 0.10	0.10	ug/l
3289	Chrysene	< 1.0	1.0	ug/l
3290	Benzo(b)fluoranthene	< 0.20	0.20	ug/l
3291	Benzo(k)fluoranthene	< 0.10	0.10	ug/l
3292	Benzo(a)pyrene	< 0.20	0.20	ug/l
3293	Dibenzo(a,h)anthracene	< 0.20	0.20	ug/l
3294	Benzo(g,h,i)perylene	< 0.50	0.50	ug/l
3295	Indeno(1,2,3-cd)pyrene	< 0.50	0.50	ug/l

Questions? Contact your Client Services Representative
De Brooks at (717) 656-2300

Respectfully Submitted
Jenifer E. Hess, B.S.
Group Leader Pesticides/PCBs

MEMBER ACIL
Lancaster Laboratories
2425 New Holland Pike
PO Box 12425
Lancaster, PA 17605-2425
717-656-2300 Fax 717-656-2681

See reverse side for explanation of symbols and abbreviations

Lancaster Laboratories
A division of Thermo Analytical Inc.

LLI Sample No. WW 2703029
Collected: 5/ 1/97 at 14:30 by GM

Submitted: 5/ 2/97 Reported: 5/ 9/97
Discard: 5/17/97

MOW-050197-C6 Grab Water Sample

Morgantown Ordnance - Project No. 7004350000

Account No: 07867
ICF Kaiser Engineers, Inc.
Gateway View Plaza
1600 W. Carson St.
Pittsburgh PA 15219

P.O. 7004350000
Rel.

CAT NO.	ANALYSIS NAME	AS RECEIVED RESULTS	LIMIT OF QUANTITATION	UNITS
PCBs in Water				
0639	PCB-1016	< 1.0	1.0	ug/l
0640	PCB-1221	< 1.0	1.0	ug/l
0641	PCB-1232	< 1.0	1.0	ug/l
0642	PCB-1242	< 1.0	1.0	ug/l
0643	PCB-1248	< 1.0	1.0	ug/l
0644	PCB-1254	< 1.0	1.0	ug/l
0645	PCB-1260	< 1.0	1.0	ug/l

Questions? Contact your Client Services Representative
De Brooks at (717) 656-2300

Respectfully Submitted
Jenifer E. Hess, B.S.
Group Leader Pesticides/PCBs

MEMBER ACIL
Lancaster Laboratories
2425 New Holland Pike
PO Box 12425
Lancaster, PA 17605-2425
717-656-2300 Fax: 717-656-2681

Lancaster Laboratories
A division of Thermo Analytical Inc.

LLI Sample No. WW 2703029
Collected: 5/ 1/97 at 14:30 by GM

Submitted: 5/ 2/97 Reported: 5/ 9/97
Discard: 5/17/97

MOW-050197-C6 Grab Water Sample

Morgantown Ordnance - Project No. 7004350000

Account No: 07867
ICF Kaiser Engineers, Inc.
Gateway View Plaza
1600 W. Carson St.
Pittsburgh PA 15219

P.O. 7004350000
Rel.

CAT NO.	ANALYSIS NAME	AS RECEIVED RESULTS	LIMIT OF QUANTITATION	UNITS
Base Neutrals				
0689	hexachlorobenzene	< 10.	10.	ug/l

Questions? Contact your Client Services Representative
De Brooks at (717) 656-2300

Respectfully Submitted
Christine M. Ratcliff, B.S.
Senior Chemist, GC/MS

Lancaster Laboratories
A division of Thermo Analytical Inc.

LLI Sample No. WW 2703029
Collected: 5/ 1/97 at 14:30 by GM

Submitted: 5/ 2/97 Reported: 5/ 9/97
Discard: 5/17/97

MOW-050197-C6 Grab Water Sample

Morgantown Ordnance - Project No. 7004350000

Account No: 07867
ICF Kaiser Engineers, Inc.
Gateway View Plaza
1600 W. Carson St.
Pittsburgh PA 15219

P.O. 7004350000
Rel.

CAT NO.	ANALYSIS NAME	AS RECEIVED RESULTS	LIMIT OF QUANTITATION	UNITS
Base Neutrals (cont)				

Questions? Contact your Client Services Representative
De Brooks at (717) 656-2300

Respectfully Submitted
Christine M. Ratcliff, B.S.
Senior Chemist, GC/MS

MEMBER ACIL
Lancaster Laboratories
2425 New Holland Pike
PO Box 12425
Lancaster, PA 17605-2425
717-656-2300 Fax 717-656-2681

See reverse side for explanation of symbols and abbreviations.

Analysis Report

Lancaster Laboratories
A division of Thermo Analytical Inc.

LLI Sample No. SW 2701226
Collected: 4/29/97 at 11:25 by GM

Submitted: 4/30/97 Reported: 5/ 5/97
Discard: 5/20/97

MOW R 271 Composite Soil Sample
70043-500-00
Morgantown Ordnance Works - Morgantown, WV

Account No: 07867
ICF Kaiser Engineers, Inc.
Gateway View Plaza
1600 W. Carson St.
Pittsburgh PA 15219

P.O. 70043-500-00
Rel.

CAT NO.	ANALYSIS NAME	AS RECEIVED RESULTS	AS RECEIVED LIMIT OF QUANTITATION	UNITS	DRY WEIGHT RESULTS	DRY WEIGHT LIMIT OF QUANTITATION
0159	Mercury	25.7	4.8	mg/kg	41.8	7.8
2111	Moisture	38.4	0.50	% by wt.		

"Moisture" represents the loss in weight of the sample after drying with an infrared lamp at 150 degrees Celsius.

1 COPY TO ICF Kaiser Engineers, Inc. ATTN: Mr. Doug Taylor

Questions? Contact your Client Services Representative
De Brooks at (717) 656-2300
09:32:03 D 0001 2 130462 562805
320 40.00 00013460 ASR000

Respectfully Submitted
Ramona V. Layman
Manager, Metals/Leachates

MEMBER ACIL
Lancaster Laboratories
2425 New Holland Pike
PO Box 12425
Lancaster, PA 17605-2425
717-656-2300 Fax 717-656-2681

See reverse side for explanation of symbols and abbreviations

Analysis Report

Lancaster Laboratories
A division of Thermo Analytical Inc.

LLI Sample No. SW 2701227
Collected: 4/29/97 at 11:35 by GM

Submitted: 4/30/97 Reported: 5/ 5/97
Discard: 5/20/97

MOW R 272 Composite Soil Sample
70043-500-00
Morgantown Ordnance Works - Morgantown, WV

Account No: D7867
ICF Kaiser Engineers, Inc.
Gateway View Plaza
1600 W. Carson St.
Pittsburgh PA 15219

P.O. 70043-500-00
Rel.

CAT NO.	ANALYSIS NAME	AS RECEIVED RESULTS	AS RECEIVED LIMIT OF QUANTITATION	UNITS	DRY WEIGHT RESULTS	DRY WEIGHT LIMIT OF QUANTITATION
0159	Mercury	135.	48.	mg/kg	202.	72.
2111	Moisture	33.5	0.50	% by wt.		

"Moisture" represents the loss in weight of the sample after drying with an infrared lamp at 150 degrees Celsius.

1 COPY TO ICF Kaiser Engineers, Inc. ATTN: Mr. Doug Taylor

Questions? Contact your Client Services Representative
De Brooks at (717) 656-2300
09:32:17 D 0001 2 130462 562805
320 0.00 00009460 ASR000

Respectfully Submitted
Ramona V. Layman
Manager, Metals/Leachates

MEMBER ACIL
Lancaster Laboratories
2425 New Holland Pike
PO Box 12425
Lancaster, PA 17605-2425
717-656-2300 Fax 717-656-2681

See reverse side for explanation of symbols and abbreviations

Analysis Report

Lancaster Laboratories
A division of Thermo Analytical Inc.

LLI Sample No. WW 2704525
Collected: 5/ 5/97 at 12:00 by CC

Submitted: 5/ 6/97 Reported: 5/ 8/97
Discard: 5/23/97

MOW-RB-14 Grab Water Sample

Morgantown Ordnance Works Project No. 66473

Account No: 07867
ICF Kaiser Engineers, Inc.
Gateway View Plaza
1600 W. Carson St.
Pittsburgh PA 15219

P.O. 66473
Rel.

CAT NO.	ANALYSIS NAME	AS RECEIVED RESULTS	LIMIT OF QUANTITATION	UNITS
1861	PAH's in Water			See Page 2

1 COPY TO ICF Kaiser Engineers, Inc. ATTN: Mr. Doug Taylor

Questions? Contact your Client Services Representative
De Brooks at (717) 656-2300
13:05:27 D 0001 1 128629 563578
320 40.00 00040000 ASR000

Respectfully Submitted
Jenifer E. Hess, B.S.
Group Leader Pesticides/PCBs

MEMBER ACIL
Lancaster Laboratories
2425 New Holland Pike
PO Box 12425
Lancaster, PA 17605-2425
717-656-2300 Fax 717-656-2681

See reverse side for explanation of symbols and abbreviations.

Lancaster Laboratories
A division of Thermo Analytical Inc.

LLI Sample No. WW 2704525
Collected: 5/ 5/97 at 12:00 by CC

Submitted: 5/ 6/97 Reported: 5/ 8/97
Discard: 5/23/97

MOW-RB-14 Grab Water Sample

Morgantown Ordnance Works Project No. 66473

Account No: 07867
ICF Kaiser Engineers, Inc.
Gateway View Plaza
1600 W. Carson St.
Pittsburgh PA 15219

P.O. 66473
Rel.

CAT NO.	ANALYSIS NAME	AS RECEIVED RESULTS	LIMIT OF QUANTITATION	UNITS
PAH's in Water				
3280	Naphthalene	< 9.5	9.5	ug/l
3281	Acenaphthylene	< 19.	19.	ug/l
3282	Acenaphthene	< 19.	19.	ug/l
3283	Fluorene	< 1.9	1.9	ug/l
3284	Phenanthrene	< 1.9	1.9	ug/l
3285	Anthracene	< 0.95	0.95	ug/l
3286	Fluoranthene	< 0.47	0.47	ug/l
3287	Pyrene	< 1.9	1.9	ug/l
3288	Benzo(a)anthracene	< 0.095	0.095	ug/l
3289	Chrysene	< 0.95	0.95	ug/l
3290	Benzo(b)fluoranthene	< 0.19	0.19	ug/l
3291	Benzo(k)fluoranthene	< 0.095	0.095	ug/l
3292	Benzo(a)pyrene	< 0.19	0.19	ug/l
3293	Dibenzo(a,h)anthracene	< 0.19	0.19	ug/l
3294	Benzo(g,h,i)perylene	< 0.47	0.47	ug/l
3295	Indeno(1,2,3-cd)pyrene	< 0.47	0.47	ug/l

Questions? Contact your Client Services Representative
De Brooks at (717) 656-2300

Respectfully Submitted
Jenifer E. Hess, B.S.
Group Leader Pesticides/PCBs

MEMBER ACIL
Lancaster Laboratories
2425 New Holland Pike
PO Box 12425
Lancaster, PA 17605-2425
717-656-2300 Fax 717-656-2681

See reverse side for explanation of symbols and abbreviations

Analysis Report

Lancaster Laboratories
A division of Thermo Analytical Inc.

LLI Sample No. SW 2704505
Collected: 5/ 5/97 at 12:50 by CC

Submitted: 5/ 6/97 Reported: 5/ 9/97
Discard: 5/24/97

MOW-AB-273 Composite Soil Sample

Morgantown Ordnance Works Project No. 66473

Account No: 07867
ICF Kaiser Engineers, Inc.
Gateway View Plaza
1600 W. Carson St.
Pittsburgh PA 15219

P.O. 66473
Rel.

CAT NO.	ANALYSIS NAME	AS RECEIVED RESULTS	AS RECEIVED LIMIT OF QUANTITATION	AS RECEIVED UNITS	DRY WEIGHT RESULTS	DRY WEIGHT LIMIT OF QUANTITATION
0155	Lead	11.	10.	mg/kg	13.	12.
1862	PAH's in Solids			See Page 2		
2111	Moisture	14.3	0.50	% by wt.		

"Moisture" represents the loss in weight of the sample after drying with an infrared lamp at 150 degrees Celsius.

1 COPY TO ICF Kaiser Engineers, Inc. ATTN: Mr. Doug Taylor

Questions? Contact your Client Services Representative
De Brooks at (717) 656-2300
05:18:45 D 0001 9 128629 563575
320 65.00 00052400 ASR000

Respectfully Submitted
Ramona V. Layman
Manager, Metals/Leachates

MEMBER ACIL
Lancaster Laboratories
2425 New Holland Pike
PO Box 12425
Lancaster, PA 17605-2425
717-656-2300 Fax 717-656-2681

See reverse side for explanation of symbols and abbreviations.

Lancaster Laboratories
A division of Thermo Analytical Inc.

LLI Sample No. SW 2704505
Collected: 5/ 5/97 at 12:50 by CC

Submitted: 5/ 6/97 Reported: 5/ 9/97
Discard: 5/24/97

MOW-AB-273 Composite Soil Sample

Morgantown Ordnance Works Project No. 66473

Account No: 07867
ICF Kaiser Engineers, Inc.
Gateway View Plaza
1600 W. Carson St.
Pittsburgh PA 15219

P.O. 66473
Rel.

CAT NO.	ANALYSIS NAME	AS RECEIVED RESULTS	AS RECEIVED LIMIT OF QUANTITATION	UNITS	DRY WEIGHT RESULTS	DRY WEIGHT LIMIT OF QUANTITATION
PAH's in Solids						
3296	Naphthalene	< 670.	670.	ug/kg	< 780.	780.
3297	Acenaphthylene	< 670.	670.	ug/kg	< 780.	780.
3298	Acenaphthene	< 670.	670.	ug/kg	< 780.	780.
3299	Fluorene	< 670.	670.	ug/kg	< 780.	780.
3300	Phenanthrene	600.	170.	ug/kg	700.	190.
3301	Anthracene	< 170.	170.	ug/kg	< 190.	190.
3302	Fluoranthene	748.	67.	ug/kg	873.	78.
3303	Pyrene	649.	67.	ug/kg	757.	78.
3304	Benzo(a)anthracene +	352.	3.0	ug/kg	410.	3.5
3305	Chrysene +	319.	60.	ug/kg	373.	70.
3306	Benzo(b)fluoranthene +	< 13.	13.	ug/kg	< 16.	16.
3307	Benzo(k)fluoranthene +	172.	13.	ug/kg	201.	16.
3308	Benzo(a)pyrene +	412.	13.	ug/kg	481.	16.
3309	Dibenzo(a,h)anthracene +	< 13.	13.	ug/kg	< 16.	16.
3310	Benzo(g,h,i)perylene	653.	33.	ug/kg	761.	39.
3311	Indeno(1,2,3-cd)pyrene +	361.	33.	ug/kg	422.	39.

Due to interfering peaks on the chromatogram, the values reported represent the lowest quantitation limits obtainable.
Despite numerous cleanup methods, we were unable to reach our usual quantitation limits.

Questions? Contact your Client Services Representative
De Brooks at (717) 656-2300

Respectfully Submitted
Jenifer E. Hess, B.S.
Group Leader Pesticides/PCBs

MEMBER ACIL
Lancaster Laboratories
2425 New Holland Pike
PO Box 12425
Lancaster, PA 17605-2425
717-656-2300 Fax 717-656-2681

Analysis Report

Lancaster Laboratories
A division of Thermo Analytical Inc.

LLI Sample No. SW 2704506
Collected: 5/ 5/97 at 13:00 by CC

Submitted: 5/ 6/97 Reported: 5/ 9/97
Discard: 5/24/97

MOW-BB-274 Unspiked Composite Soil Sample

Morgantown Ordnance Works Project No. 66473
BB274 SDG#: XXX01-018KG

Account No: 07867
ICF Kaiser Engineers, Inc.
Gateway View Plaza
1600 W. Carson St.
Pittsburgh PA 15219

P.O. 66473
Rel.

CAT NO.	ANALYSIS NAME	AS RECEIVED RESULTS	AS RECEIVED LIMIT OF QUANTITATION	UNITS	DRY WEIGHT RESULTS	DRY WEIGHT LIMIT OF QUANTITATION
1862	PAH's in Solids			See Page 2		
2111	Moisture	17.4	0.50	% by wt.		

"Moisture" represents the loss in weight of the sample after drying with an infrared lamp at 150 degrees Celsius.

1 COPY TO ICF Kaiser Engineers, Inc. ATTN: Mr. Doug Taylor

Questions? Contact your Client Services Representative
De Brooks at (717) 656-2300
05:19:05 D 0001 9 128629 563575
320 0.00 00042200 ASR000

Respectfully Submitted
Ramona V. Layman
Manager, Metals/Leachates

MEMBER ACIL
Lancaster Laboratories
2425 New Holland Pike
PO Box 12425
Lancaster, PA 17605-2425
717-656-2300 Fax: 717-656-2681

See reverse side for explanation of symbols and abbreviations.

Lancaster Laboratories
A division of Thermo Analytical Inc.

LLI Sample No. SW 2704506
Collected: 5/ 5/97 at 13:00 by CC

Submitted: 5/ 6/97 Reported: 5/ 9/97
Discard: 5/24/97

MOW-BB-274 Unspiked Composite Soil Sample

Morgantown Ordnance Works Project No. 66473
BB274 SDG#: XXX01-01BKG

Account No: 07867
ICF Kaiser Engineers, Inc.
Gateway View Plaza
1600 W. Carson St.
Pittsburgh PA 15219

P.O. 66473
Rel.

CAT NO.	ANALYSIS NAME	AS RECEIVED RESULTS	AS RECEIVED LIMIT OF QUANTITATION	UNITS	DRY WEIGHT RESULTS	DRY WEIGHT LIMIT OF QUANTITATION
PAH's in Solids						
3296	Naphthalene	< 3,400.	3,400.	ug/kg	< 4,100.	4,100.
3297	Acenaphthylene	< 3,400.	3,400.	ug/kg	< 4,100.	4,100.
3298	Acenaphthene	< 3,400.	3,400.	ug/kg	< 4,100.	4,100.
3299	Fluorene	< 3,400.	3,400.	ug/kg	< 4,100.	4,100.
3300	Phenanthrene	5,070.	840.	ug/kg	6,100.	1,000.
3301	Anthracene	< 840.	840.	ug/kg	< 1,000.	1,000.
3302	Fluoranthene	7,500.	1,700.	ug/kg	9,100.	2,000.
3303	Pyrene	6,300.	1,700.	ug/kg	7,600.	2,000.
3304	Benzo(a)anthracene	4,170.	150.	ug/kg	5,050.	180.
3305	Chrysene	3,800.	750.	ug/kg	4,600.	910.
3306	Benzo(b)fluoranthene	3,010.	340.	ug/kg	3,640.	410.
3307	Benzo(k)fluoranthene	1,930.	170.	ug/kg	2,340.	200.
3308	Benzo(a)pyrene	4,150.	340.	ug/kg	5,020.	410.
3309	Dibenzo(a,h)anthracene	< 170.	170.	ug/kg	< 200.	200.
3310	Benzo(g,h,i)perylene	< 3,200.	3,200.	ug/kg	< 3,900.	3,900.
3311	Indeno(1,2,3-cd)pyrene	3,690.	420.	ug/kg	4,470.	510.

Due to interfering peaks on the chromatogram, the values reported represent the lowest quantitation limits obtainable.

Questions? Contact your Client Services Representative
De Brooks at (717) 656-2300

Respectfully Submitted
Jenifer E. Hess, B.S.
Group Leader Pesticides/PCBs

MEMBER ACIL
Lancaster Laboratories
2425 New Holland Pike
PO Box 12425
Lancaster, PA 17605-2425
717-656-2300 Fax: 717-656-2681

See reverse side for explanation of symbols and abbreviations

Lancaster Laboratories
A division of Thermo Analytical Inc.

LLI Sample No. SW 2704507
Collected: 5/ 5/97 at 13:00 by CC

Submitted: 5/ 6/97 Reported: 5/ 9/97
Discard: 5/24/97

MOW-BB-274 Matrix Spike Composite Soil Sample

Morgantown Ordnance Works Project No. 66473
BB274 SDG#: XXX01-01MS

Account No: 07867
ICF Kaiser Engineers, Inc.
Gateway View Plaza
1600 W. Carson St.
Pittsburgh PA 15219

P.O. 66473
Rel.

CAT NO.	ANALYSIS NAME	AS RECEIVED RESULTS	AS RECEIVED LIMIT OF QUANTITATION	AS RECEIVED UNITS	DRY WEIGHT RESULTS	DRY WEIGHT LIMIT OF QUANTITATION
1862	PAH's in Solids			See Page 2		
2118	Moisture	17.4	0.50	% by wt.		

"Moisture" represents the loss in weight of the sample after drying with an infrared lamp at 150 degrees Celsius.

1 COPY TO ICF Kaiser Engineers, Inc. ATTN: Mr. Doug Taylor

Questions? Contact your Client Services Representative
De Brooks at (717) 656-2300
05:19:25 D 0001 9 128629 563575
320 0.00 00000000 ASR000

Respectfully Submitted
Ramona V. Layman
Manager, Metals/Leachates

MEMBER ACIL
Lancaster Laboratories
2425 New Holland Pike
PO Box 12425
Lancaster, PA 17605-2425
717-656-2300 Fax: 717-656-2681

See reverse side for explanation of symbols and abbreviations.

Lancaster Laboratories
A division of Thermo Analytical Inc.

LLI Sample No. SW 2704507
Collected: 5/ 5/97 at 13:00 by CC

Submitted: 5/ 6/97 Reported: 5/ 9/97
Discard: 5/24/97

MOW-BB-274 Matrix Spike Composite Soil Sample

Morgantown Ordnance Works Project No. 66473
BB274 SDG#: XXX01-01MS

Account No: 07867
ICF Kaiser Engineers, Inc.
Gateway View Plaza
1600 W. Carson St.
Pittsburgh PA 15219

P.O. 66473
Rel.

CAT NO.	ANALYSIS NAME	AS RECEIVED RESULTS	AS RECEIVED LIMIT OF QUANTITATION	UNITS	DRY WEIGHT RESULTS	DRY WEIGHT LIMIT OF QUANTITATION
PAH's in Solids						
3296	Naphthalene	5,800.	3,400.	ug/kg	7,000.	4,100.
3297	Acenaphthylene	5,100.	3,400.	ug/kg	6,200.	4,100.
3298	Acenaphthene	7,700.	3,400.	ug/kg	9,400.	4,100.
3299	Fluorene	< 3,400.	3,400.	ug/kg	< 4,100.	4,100.
3300	Phenanthrene	3,210.	840.	ug/kg	3,900.	1,000.
3301	Anthracene	930.	840.	ug/kg	1,100.	1,000.
3302	Fluoranthene	6,000.	1,700.	ug/kg	7,300.	2,000.
3303	Pyrene	5,400.	1,700.	ug/kg	6,500.	2,000.
3304	Benzo(a)anthracene	3,270.	75.	ug/kg	3,960.	91.
3305	Chrysene	3,050.	750.	ug/kg	3,700.	910.
3306	Benzo(b)fluoranthene	2,680.	170.	ug/kg	3,240.	200.
3307	Benzo(k)fluoranthene	1,700.	170.	ug/kg	2,060.	200.
3308	Benzo(a)pyrene	3,720.	170.	ug/kg	4,510.	200.
3309	Dibenzo(a,h)anthracene	490.	170.	ug/kg	590.	200.
3310	Benzo(g,h,i)perylene	< 420.	420.	ug/kg	< 510.	510.
3311	Indeno(1,2,3-cd)pyrene	3,380.	420.	ug/kg	4,100.	510.

Due to interfering peaks on the chromatogram, the values reported represent the lowest quantitation limits obtainable.

Questions? Contact your Client Services Representative
De Brooks at (717) 656-2300

Respectfully Submitted
Jenifer E. Hess, B.S.
Group Leader Pesticides/PCBs

MEMBER ACIL
Lancaster Laboratories
2425 New Holland Pike
PO Box 12425
Lancaster, PA 17605-2425
717-656-2300 Fax: 717-656-2681

See reverse side for explanation of symbols and abbreviations

Analysis Report

Lancaster Laboratories
A division of Thermo Analytical Inc.

LLI Sample No. SW 2704508
Collected: 5/ 5/97 at 13:00 by CC

Submitted: 5/ 6/97 Reported: 5/ 9/97
Discard: 5/24/97

MOW-BB-274 Matrix Spike Dup. Composite Soil Sample

Account No: 07867
ICF Kaiser Engineers, Inc.
Gateway View Plaza
1600 W. Carson St.
Pittsburgh PA 15219

P.O. 66473
Rel.

Morgantown Ordnance Works Project No. 66473
BB274 SOG#: XXX01-01MSD

CAT NO.	ANALYSIS NAME	AS RECEIVED RESULTS	AS RECEIVED LIMIT OF QUANTITATION	AS RECEIVED UNITS	DRY WEIGHT RESULTS	DRY WEIGHT LIMIT OF QUANTITATION
1862	PAH's in Solids			See Page 2		
2118	Moisture	17.4	0.50	% by wt.		
	"Moisture" represents the loss in weight of the sample after drying with an infrared lamp at 150 degrees Celsius.					
2121	Moisture Duplicate	17.2	0.50	% by wt.		
	The duplicate moisture value is provided to assess the precision of the moisture test. For comparability purposes, the initial moisture determination is the value used to perform dry weight calculations.					

1 COPY TO ICF Kaiser Engineers, Inc. ATTN: Mr. Doug Taylor

Questions? Contact your Client Services Representative
De Brooks at (717) 656-2300
05:19:46 D 0001 9 128629 563575
320 0.00 00000000 ASR000

Respectfully Submitted
Ramona V. Layman
Manager, Metals/Leachates

MEMBER ACIL
Lancaster Laboratories
2425 New Holland Pike
PO Box 12425
Lancaster, PA 17605-2425
717-656-2300 Fax: 717-656-2681

See reverse side for explanation of symbols and abbreviations.

Lancaster Laboratories
A division of Thermo Analytical Inc.

LLI Sample No. SW 2704508
Collected: 5/ 5/97 at 13:00 by CC

Submitted: 5/ 6/97 Reported: 5/ 9/97
Discard: 5/24/97

Account No: 07867
ICF Kaiser Engineers, Inc.
Gateway View Plaza
1600 W. Carson St.
Pittsburgh PA 15219

P.O. 66473
Rel.

MOW-BB-274 Matrix Spike Dup. Composite Soil Sample

Morgantown Ordnance Works Project No. 66473
BB274 SDG#: XXX01-01MSD

CAT NO.	ANALYSIS NAME	AS RECEIVED RESULTS	AS RECEIVED LIMIT OF QUANTITATION	AS RECEIVED UNITS	DRY WEIGHT RESULTS	DRY WEIGHT LIMIT OF QUANTITATION
PAH's in Solids						
3296	Naphthalene	6,600.	3,400.	ug/kg	8,000.	4,100.
3297	Acenaphthylene	6,700.	3,400.	ug/kg	8,100.	4,100.
3298	Acenaphthene	4,100.	3,400.	ug/kg	4,900.	4,100.
3299	Fluorene	< 3,400.	3,400.	ug/kg	< 4,100.	4,100.
3300	Phenanthrene	2,650.	840.	ug/kg	3,200.	1,000.
3301	Anthracene	890.	840.	ug/kg	1,100.	1,000.
3302	Fluoranthene	4,800.	1,700.	ug/kg	5,800.	2,000.
3303	Pyrene	4,400.	1,700.	ug/kg	5,300.	2,000.
3304	Benzo(a)anthracene	2,540.	75.	ug/kg	3,080.	91.
3305	Chrysene	2,430.	750.	ug/kg	2,940.	910.
3306	Benzo(b)fluoranthene	2,030.	170.	ug/kg	2,460.	200.
3307	Benzo(k)fluoranthene	1,340.	170.	ug/kg	1,630.	200.
3308	Benzo(a)pyrene	2,930.	170.	ug/kg	3,550.	200.
3309	Dibenzo(a,h)anthracene	380.	170.	ug/kg	460.	200.
3310	Benzo(g,h,i)perylene	< 420.	420.	ug/kg	< 510.	510.
3311	Indeno(1,2,3-cd)pyrene	2,770.	420.	ug/kg	3,350.	510.

Due to interfering peaks on the chromatogram, the values reported represent the lowest quantitation limits obtainable.

Questions? Contact your Client Services Representative
De Brooks at (717) 656-2300

Respectfully Submitted
Jenifer E. Hess, B.S.
Group Leader Pesticides/PCBs

MEMBER ACIL
Lancaster Laboratories
2425 New Holland Pike
PO Box 12425
Lancaster, PA 17605-2425
717-656-2300 Fax 717-656-2681

See reverse side for explanation of symbols and abbreviations

Analysis Report

Lancaster Laboratories
A division of Thermo Analytical Inc.

LLI Sample No. SW 2704509
Collected: 5/ 5/97 at 13:10 by CC

Submitted: 5/ 6/97 Reported: 5/ 9/97
Discard: 5/24/97

MOW-CB-275 Composite Soil Sample

Morgantown Ordnance Works Project No. 66473

Account No: 07867
ICF Kaiser Engineers, Inc.
Gateway View Plaza
1600 W. Carson St.
Pittsburgh PA 15219

P.O. 66473
Rel.

CAT NO.	ANALYSIS NAME	AS RECEIVED RESULTS	AS RECEIVED LIMIT OF QUANTITATION	UNITS	DRY WEIGHT RESULTS	DRY WEIGHT LIMIT OF QUANTITATION
1862	PAH's in Solids			See Page 2		
2111	Moisture	17.0	0.50	% by wt.		

"Moisture" represents the loss in weight of the sample after drying with an infrared lamp at 150 degrees Celsius.

1 COPY TO ICF Kaiser Engineers, Inc. ATTN: Mr. Doug Taylor

Questions? Contact your Client Services Representative
De Brooks at (717) 656-2300
05:20:07 D 0001 9 128629 563575
320 0.00 00042200 ASR000

Respectfully Submitted
Ramona V. Layman
Manager, Metals/Leachates

MEMBER ACIL
Lancaster Laboratories
2425 New Holland Pike
PO Box 12425
Lancaster, PA 17605-2425
717-656-2300 Fax: 717-656-2681

Lancaster Laboratories
A division of Thermo Analytical Inc.

LLI Sample No. SW 2704509
Collected: 5/ 5/97 at 13:10 by CC

Submitted: 5/ 6/97 Reported: 5/ 9/97
Discard: 5/24/97

MOW-CB-275 Composite Soil Sample

Morgantown Ordnance Works Project No. 66473

Account No: 07867
ICF Kaiser Engineers, Inc.
Gateway View Plaza
1600 W. Carson St.
Pittsburgh PA 15219

P.O. 66473
Rel.

CAT NO.	ANALYSIS NAME	AS RECEIVED RESULTS	AS RECEIVED LIMIT OF QUANTITATION	UNITS	DRY WEIGHT RESULTS	DRY WEIGHT LIMIT OF QUANTITATION
PAH's in Solids						
3296	Naphthalene	< 670.	670.	ug/kg	< 810.	810.
3297	Acenaphthylene	< 670.	670.	ug/kg	< 810.	810.
3298	Acenaphthene	< 670.	670.	ug/kg	< 810.	810.
3299	Fluorene	< 670.	670.	ug/kg	< 810.	810.
3300	Phenanthrene	350.	170.	ug/kg	430.	200.
3301	Anthracene	< 170.	170.	ug/kg	< 200.	200.
3302	Fluoranthene	531.	67.	ug/kg	640.	81.
3303	Pyrene	404.	67.	ug/kg	487.	81.
3304	Benzo(a)anthracene	254.	15.	ug/kg	306.	18.
3305	Chrysene	240.	150.	ug/kg	290.	180.
3306	Benzo(b)fluoranthene	191.	34.	ug/kg	230.	40.
3307	Benzo(k)fluoranthene	120.	34.	ug/kg	144.	40.
3308	Benzo(a)pyrene	245.	34.	ug/kg	295.	40.
3309	Dibenzo(a,h)anthracene	< 34.	34.	ug/kg	< 40.	40.
3310	Benzo(g,h,i)perylene	358.	84.	ug/kg	430.	100.
3311	Indeno(1,2,3-cd)pyrene	209.	84.	ug/kg	250.	100.

Due to interfering peaks on the chromatogram, the values reported represent the lowest quantitation limits obtainable.

Questions? Contact your Client Services Representative
De Brooks at (717) 656-2300

Respectfully Submitted
Jenifer E. Hess, B.S.
Group Leader Pesticides/PCBs

MEMBER ACIL
Lancaster Laboratories
2425 New Holland Pike
PO Box 12425
Lancaster, PA 17605-2425
717-656-2300 Fax 717-656-2681

See reverse side for explanation of symbols and abbreviations.

Analysis Report

Lancaster Laboratories
A division of Thermo Analytical Inc.

LLI Sample No. SW 2704510
Collected: 5/ 5/97 at 13:20 by CC

Submitted: 5/ 6/97 Reported: 5/ 9/97
Discard: 5/24/97

MOW-DB-276 Composite Soil Sample

Morgantown Ordnance Works Project No. 66473

Account No: 07867
ICF Kaiser Engineers, Inc.
Gateway View Plaza
1600 W. Carson St.
Pittsburgh PA 15219

P.O. 66473
Rel.

CAT NO.	ANALYSIS NAME	AS RECEIVED RESULTS	AS RECEIVED LIMIT OF QUANTITATION	AS RECEIVED UNITS	DRY WEIGHT RESULTS	DRY WEIGHT LIMIT OF QUANTITATION
1862	PAH's in Solids			See Page 2		
2111	Moisture	16.4	0.50	% by wt.		

"Moisture" represents the loss in weight of the sample after drying with an infrared lamp at 150 degrees Celsius.

1 COPY TO ICF Kaiser Engineers, Inc. ATTN: Mr. Doug Taylor

Questions? Contact your Client Services Representative
De Brooks at (717) 656-2300
05:20:28 D 0001 9 128629 563575
320 0.00 00042200 ASR000

Respectfully Submitted
Ramona V. Layman
Manager, Metals/Leachates

MEMBER ACIL
Lancaster Laboratories
2425 New Holland Pike
PO Box 12425
Lancaster, PA 17605-2425
717-656-2300 Fax: 717-656-2681

See reverse side for explanation of symbols and abbreviations

Lancaster Laboratories
A division of Thermo Analytical Inc.

LLI Sample No. SW 2704510
Collected: 5/ 5/97 at 13:20 by CC

Submitted: 5/ 6/97 Reported: 5/ 9/97
Discard: 5/24/97

MOW-DB-276 Composite Soil Sample

Morgantown Ordnance Works Project No. 66473

Account No: 07867
ICF Kaiser Engineers, Inc.
Gateway View Plaza
1600 W. Carson St.
Pittsburgh PA 15219

P.O. 66473
Rel.

CAT NO.	ANALYSIS NAME	AS RECEIVED RESULTS	AS RECEIVED LIMIT OF QUANTITATION	UNITS	DRY WEIGHT RESULTS	DRY WEIGHT LIMIT OF QUANTITATION
PAH's in Solids						
3296	Naphthalene	< 670.	670.	ug/kg	< 800.	800.
3297	Acenaphthylene	< 670.	670.	ug/kg	< 800.	800.
3298	Acenaphthene	< 670.	670.	ug/kg	< 800.	800.
3299	Fluorene	< 670.	670.	ug/kg	< 800.	800.
3300	Phenanthrene	500.	170.	ug/kg	600.	200.
3301	Anthracene	< 170.	170.	ug/kg	< 200.	200.
3302	Fluoranthene	1,390.	340.	ug/kg	1,660.	400.
3303	Pyrene	1,100.	340.	ug/kg	1,320.	400.
3304	Benzo(a)anthracene	674.	15.	ug/kg	806.	18.
3305	Chrysene	620.	150.	ug/kg	740.	180.
3306	Benzo(b)fluoranthene	517.	34.	ug/kg	618.	40.
3307	Benzo(k)fluoranthene	335.	34.	ug/kg	401.	40.
3308	Benzo(a)pyrene	577.	34.	ug/kg	691.	40.
3309	Dibenzo(a,h)anthracene	< 75.	75.	ug/kg	< 90.	90.
3310	Benzo(g,h,i)perylene	< 1,200.	1,200.	ug/kg	< 1,400.	1,400.
3311	Indeno(1,2,3-cd)pyrene	611.	84.	ug/kg	731.	100.

Due to interfering peaks on the chromatogram, the values reported represent the lowest quantitation limits obtainable.

Questions? Contact your Client Services Representative
De Brooks at (717) 656-2300

Respectfully Submitted
Jenifer E. Hess, B.S.
Group Leader Pesticides/PCBs

MEMBER ACIL
Lancaster Laboratories
2425 New Holland Pike
PO Box 12425
Lancaster, PA 17605-2425
717-656-2300 Fax: 717-656-2681

See reverse side for explanation of symbols and abbreviations

Analysis Report

Lancaster Laboratories
A division of Thermo Analytical Inc.

LLI Sample No. SW 2704511
Collected: 5/ 5/97 at 13:30 by CC

Submitted: 5/ 6/97 Reported: 5/ 9/97
Discard: 5/24/97

MOW-EB-277 Composite Soil Sample

Morgantown Ordnance Works Project No. 66473

Account No: 07867
ICF Kaiser Engineers, Inc.
Gateway View Plaza
1600 W. Carson St.
Pittsburgh PA 15219

P.O. 66473
Rel.

CAT NO.	ANALYSIS NAME	AS RECEIVED RESULTS	AS RECEIVED LIMIT OF QUANTITATION	AS RECEIVED UNITS	DRY WEIGHT RESULTS	DRY WEIGHT LIMIT OF QUANTITATION
1862	PAH's in Solids			See Page 2		
2111	Moisture	15.0	0.50	% by wt.		

"Moisture" represents the loss in weight of the sample after drying with an infrared lamp at 150 degrees Celsius.

1 COPY TO ICF Kaiser Engineers, Inc. ATTN: Mr. Doug Taylor

Questions? Contact your Client Services Representative
De Brooks at (717) 656-2300
05:20:49 D 0001 9 128629 563575
320 0.00 00042200 ASR000

Respectfully Submitted
Ramona V. Layman
Manager, Metals/Leachates

MEMBER ACIL
Lancaster Laboratories
2425 New Holland Pike
PO Box 12425
Lancaster, PA 17605-2425
717-656-2300 Fax: 717-656-2681

See reverse side for explanation of symbols and abbreviations

Lancaster Laboratories
A division of Thermo Analytical Inc.

LLI Sample No. SW 2704511
Collected: 5/ 5/97 at 13:30 by CC

Submitted: 5/ 6/97 Reported: 5/ 9/97
Discard: 5/24/97

MOW-EB-277 Composite Soil Sample

Morgantown Ordnance Works Project No. 66473

Account No: 07867
ICF Kaiser Engineers, Inc.
Gateway View Plaza
1600 W. Carson St.
Pittsburgh PA 15219

P.O. 66473
Rel.

CAT NO.	ANALYSIS NAME	AS RECEIVED RESULTS	AS RECEIVED LIMIT OF QUANTITATION	UNITS	DRY WEIGHT RESULTS	DRY WEIGHT LIMIT OF QUANTITATION
PAH's in Solids						
3296	Naphthalene	< 670.	670.	ug/kg	< 790.	790.
3297	Acenaphthylene	< 670.	670.	ug/kg	< 790.	790.
3298	Acenaphthene	< 670.	670.	ug/kg	< 790.	790.
3299	Fluorene	< 670.	670.	ug/kg	< 790.	790.
3300	Phenanthrene	240.	170.	ug/kg	280.	200.
3301	Anthracene	< 170.	170.	ug/kg	< 200.	200.
3302	Fluoranthene	770.	340.	ug/kg	900.	390.
3303	Pyrene	< 340.	340.	ug/kg	< 390.	390.
3304	Benzo(a)anthracene	775.	30.	ug/kg	912.	35.
3305	Chrysene	820.	150.	ug/kg	960.	180.
3306	Benzo(b)fluoranthene	854.	67.	ug/kg	1,000.	79.
3307	Benzo(k)fluoranthene	540.	67.	ug/kg	635.	79.
3308	Benzo(a)pyrene	887.	67.	ug/kg	1,040.	79.
3309	Dibenzo(a,h)anthracene	< 110.	110.	ug/kg	< 130.	130.
3310	Benzo(g,h,i)perylene	1,750.	84.	ug/kg	2,060.	98.
3311	Indeno(1,2,3-cd)pyrene	921.	84.	ug/kg	1,080.	98.

Due to interfering peaks on the chromatogram, the values reported represent the lowest quantitation limits obtainable.

Questions? Contact your Client Services Representative
De Brooks at (717) 656-2300

Respectfully Submitted
Jenifer E. Hess, B.S.
Group Leader Pesticides/PCBs

MEMBER ACIL
Lancaster Laboratories
2425 New Holland Pike
PO Box 12425
Lancaster, PA 17605-2425
717-656-2300 Fax 717-656-2681

See reverse side for explanation of symbols and abbreviations

Analysis Report

Lancaster Laboratories
A division of Thermo Analytical Inc.

LLI Sample No. SW 2704512
Collected: 5/ 5/97 at 13:40 by CC

Submitted: 5/ 6/97 Reported: 5/ 9/97
Discard: 5/24/97

MOW-FB-278 Composite Soil Sample

Morgantown Ordnance Works Project No. 66473

Account No: 07867
ICF Kaiser Engineers, Inc.
Gateway View Plaza
1600 W. Carson St.
Pittsburgh PA 15219

P.O. 66473
Rel.

CAT NO.	ANALYSIS NAME	AS RECEIVED RESULTS	AS RECEIVED LIMIT OF QUANTITATION	AS RECEIVED UNITS	DRY WEIGHT RESULTS	DRY WEIGHT LIMIT OF QUANTITATION
1862	PAH's in Solids			See Page 2		
2111	Moisture	12.3	0.50	% by wt.		

"Moisture" represents the loss in weight of the sample after drying with an infrared lamp at 150 degrees Celsius.

1 COPY TO ICF Kaiser Engineers, Inc. ATTN: Mr. Doug Taylor

Questions? Contact your Client Services Representative
De Brooks at (717) 656-2300
05:21:08 D 0001 9 128629 563575
320 0.00 00042200 ASR000

Respectfully Submitted
Ramona V. Layman
Manager, Metals/Leachates

MEMBER ACIL
Lancaster Laboratories
2425 New Holland Pike
PO Box 12425
Lancaster, PA 17605-2425
717-656-2300 Fax: 717-656-2681

See reverse side for explanation of symbols and abbreviations.

Lancaster Laboratories
A division of Thermo Analytical Inc.

LLI Sample No. SW 2704513
Collected: 5/ 5/97 at 13:41 by CC

Submitted: 5/ 6/97 Reported: 5/ 9/97
Discard: 5/24/97

MOW-FB-278D Composite Soil Sample

Morgantown Ordnance Works Project No. 66473

Account No: 07867
ICF Kaiser Engineers, Inc.
Gateway View Plaza
1600 W. Carson St.
Pittsburgh PA 15219

P.O. 66473
Rel.

CAT NO.	ANALYSIS NAME	AS RECEIVED RESULTS	AS RECEIVED LIMIT OF QUANTITATION	AS RECEIVED UNITS	DRY WEIGHT RESULTS	DRY WEIGHT LIMIT OF QUANTITATION
1862	PAH's in Solids			See Page 2		
2111	Moisture	11.4	0.50	% by wt.		

"Moisture" represents the loss in weight of the sample after drying with an infrared lamp at 150 degrees Celsius.

1 COPY TO ICF Kaiser Engineers, Inc. ATTN: Mr. Doug Taylor

Questions? Contact your Client Services Representative
De Brooks at (717) 656-2300
05:21:27 D 0001 9 128629 563575
320 0.00 00042200 ASR000

Respectfully Submitted
Ramona V. Layman
Manager, Metals/Leachates

MEMBER ACIL
Lancaster Laboratories
2425 New Holland Pike
PO Box 12425
Lancaster, PA 17605-2425
717-656-2300 Fax 717-656-2681

See reverse side for explanation of symbols and abbreviations

ICF KAISER

ICF KAISER ENGINEERS GROUP

ICF Kaiser Engineers, Inc.
Gateway View Plaza
1600 West Carson Street
Pittsburgh, PA 15219-1031
412/497-2000 Fax 412/497-2212

June 20, 1997

Ms. Melissa Whittington, RPM
General Remedial Section
USEPA Region III, 3HW23
841 Chestnut Building
Philadelphia, PA 19107

Subject: **Response Action at Morgantown Ordnance Works OU-2, Morgantown, WV**
Bi-Weekly Progress Report for the Period June 9 to June 20, 1997

Dear Ms. Whittington:

At the request of the Morgantown PRP Committee ICF Kaiser Engineers, Inc. is submitting the Bi-Weekly Progress report for the above referenced reporting period. This report is being submitted in accordance with the requirements of Section 8.7, of the Administrative Order on Consent for Removal Response Action, Docket No. III-96-68 (the Removal Order). A summary of the work anticipated for the next bi-weekly report is also attached.

Please call me or the Committee (contacts listed below) if you have any questions regarding this report.

Morgantown PRP Committee Contacts

Linda White U.S. Army Corps of Engineers (402) 221-7672	Steve Morrow Olin Corporation (423) 336-4511

Sincerely,

Charles E. Haefner, Jr.

Charles E. Haefner, Jr., P.G.
Remediation Project Manager

cc: Steve Morrow, Olin
John Burns, Olin
Roger Towe, EPES
Michael Stratton, WVA DEP
Linda White, USACOE
Michael Crain, USACOE
Ken Cooper - USACOE
Doug Taylor, ICF Kaiser
OU-1 PRP Group

66473-171-G

BI-WEEKLY REPORT

JUNE 9, 1997 TO JUNE 20, 1997

OU-2 RESPONSE ACTION
MORGANTOWN ORDNANCE WORKS
MORGANTOWN, WV

A. WORK PERFORMED JUNE 9 TO JUNE 20, 1997

- The Committee completed removal of sediment from the Settling Basin at the southern end of the Crane Alley.
- The Committee completed mounting the 3rd steel plate at the Southern Utility Corridor opening and backfilled the Corridor.
- The Committee transported and disposed of approximately 41 tons of sediment from the Southern Sump to the Chem Waste Management's TWI facility in Geneva, IL.
- The Committee transported and discharged for treatment approximately 14,200 gallons of water to the Clean Harbors, Cleveland Ohio facility. The water came from the Southern Sump and had a benzene concentration of 18 ppb. This concentration was greater than the allowable limit to discharge into the Monongahela River.
- The Committee pressure washed the walls and floor of the Settling Basin.
- The Committee placed the discharge pipe in and sealed the tunnel between the Crane Alley and Pump Pit.
- The Committee collected discharge water samples from the Modular Tanks containing water pumped out of the Crane Alley Sump/Trench and Pump Pit and the Coke Oven/Coke By-Products pits and sumps. Water samples were obtained when approximately 50,000 gallons were pumped into the Modular Tanks and at the conclusion of pumping. Samples were analyzed for TOC, COD, phenols, oil and grease, benzene, Fe, Pb, Mn, Cu, Zn, Hg and Al, PAHs, PCBs, CN, pH, TSS, flourene, chlorides and ammonia-nitrogen. To date, approximately 800,000 gallons have been discharged into the Monongahela River.
- The Committee transported approximately 17.52 tons of sediment from the Quench Tower for disposal at Chem Waste Management's Model City, NY Facility.
- The Committee completed sealing of drain openings in the Crane Alley.
- The Committee transported approximately 83.33 tons of PCB contaminated sediment from the Crane Alley Sump/Trench for disposal at Chem Waste Management's Port Arthur, Texas facility.

- The Committee completed removal of sediment from the Southern Sump and pressure washed the entire sump.
- The Committee completed removal of sediment from the Quench Tower sump and pressure washed the walls and floor of the sump.
- The Committee backfilled the Southern Sump, Quench Tower
- The Committee initiated demobilization from the Site following a walkthrough inspection on June 17, 1997.

B. WORK TO BE PERFORMED JUNE 23 TO JULY 4, 1997

- The final shipment of PCB waste will be transported and disposed of at the Chem Waste Management's Port Arthur, Texas facility.
- The Committee will complete demobilization from the Site.

C. SUMMARY OF CONCERNS AND THEIR IMPACT ON RESPONSE ACTION ACTIVITIES.

- Rain continued to be a slight problem. Areas that have previously been pumped required additional pumping after the rain has ceased. No impact on schedule is expected.

D. ANALYTICAL DATA RECEIVED

- Water samples were obtained from the Modular Tanks. Analytical sample results are included in Attachment A.
- PCB wipe samples from the Crane Alley Sump/Trench are included in Attachment A. Each of the PCB wipe samples obtained had concentrations below 10 µg/wipe.

E. MODIFICATIONS TO RESPONSE ACTION PLAN

- None

Analysis Report

Lancaster Laboratories
A division of Thermo Analytical Inc.

LLI Sample No. SW 2719393
Collected: 5/30/97 at 18:00 by CEH

Submitted: 5/31/97 Reported: 6/ 4/97
Discard: 6/19/97

MOW053097-CA1 Wipe Sample

Morgantown Ordnance Works/Project #70043

Account No: 07867
ICF Kaiser Engineers, Inc.
Gateway View Plaza
1600 W. Carson St.
Pittsburgh PA 15219

P.O. 70043
Rel.

CAT NO.	ANALYSIS NAME	AS RECEIVED RESULTS	LIMIT OF QUANTITATION	UNITS
7512	PCBs in Wipes/Air			See Page 2

1 COPY TO ICF Kaiser Engineers, Inc. ATTN: Mr. Doug Taylor

Questions? Contact your Client Services Representative
De Brooks at (717) 656-2300
21:34:36 D 0001 3 567295
320 40.00 00026500 ASR000

Respectfully Submitted
Christine M. Ratcliff, B.S.
Senior Chemist, GC/MS

MEMBER ACIL
Lancaster Laboratories
2425 New Holland Pike
PO Box 12425
Lancaster, PA 17605-2425
717-656-2300 Fax: 717-656-2681

See reverse side for explanation of symbols and abbreviations.

Lancaster Laboratories
A division of Thermo Analytical Inc.

LLI Sample No. SW 2719393
Collected: 5/30/97 at 18:00 by CEH

Submitted: 5/31/97 Reported: 6/ 4/97
Discard: 6/19/97

MOW053097-CA1 Wipe Sample

Morgantown Ordnance Works/Project #70043

Account No: 07867
ICF Kaiser Engineers, Inc.
Gateway View Plaza
1600 W. Carson St.
Pittsburgh PA 15219

P.O. 70043
Rel.

CAT NO.	ANALYSIS NAME	AS RECEIVED RESULTS	LIMIT OF QUANTITATION	UNITS
PCBs in Wipes/Air				
7514	PCB-1016	< 10.	10.	ug
7515	PCB-1221	< 10.	10.	ug
7516	PCB-1232	< 10.	10.	ug
7517	PCB-1242	< 10.	10.	ug
7518	PCB-1248	< 10.	10.	ug
7519	PCB-1254	< 10.	10.	ug
7520	PCB-1260	< 10.	10.	ug

The surrogate data is outside the QC limits in the method blank. Since the sample surrogate data is within the QC limits, the data was reported.

Questions? Contact your Client Services Representative
De Brooks at (717) 656-2300

Respectfully Submitted
Jenifer E. Hess, B.S.
Group Leader Pesticides/PCBs

MEMBER ACIL
Lancaster Laboratories
2425 New Holland Pike
PO Box 12425
Lancaster, PA 17605-2425
717-656-2300 Fax: 717-656-2681

See reverse side for explanation of symbols and abbreviations.

Lancaster Laboratories
A division of Thermo Analytical Inc.

LLI Sample No. SW 2719394
Collected: 5/30/97 at 18:00 by CEH

Submitted: 5/31/97 Reported: 6/ 4/97
Discard: 6/19/97

MOW053097-CA2 Wipe Sample

Morgantown Ordnance Works/Project #70043

Account No: 07867
ICF Kaiser Engineers, Inc.
Gateway View Plaza
1600 W. Carson St.
Pittsburgh PA 15219

P.O. 70043
Rel.

CAT NO.	ANALYSIS NAME	AS RECEIVED RESULTS	LIMIT OF QUANTITATION	UNITS
7512	PCBs in Wipes/Air			See Page 2

1 COPY TO ICF Kaiser Engineers, Inc. ATTN: Mr. Doug Taylor

Questions? Contact your Client Services Representative
De Brooks at (717) 656-2300
21:34:52 D 0001 3 567295
320 0.00 00022500 ASR000

Respectfully Submitted
Christine M. Ratcliff, B.S.
Senior Chemist, GC/MS

MEMBER ACIL
Lancaster Laboratories
2425 New Holland Pike
PO Box 12425
Lancaster, PA 17605-2425
717-656-2300 Fax: 717-656-2681

See reverse side for explanation of symbols and abbreviations.

Lancaster Laboratories
A division of Thermo Analytical Inc.

LLI Sample No. SW 2719394
Collected: 5/30/97 at 18:00 by CEH

Submitted: 5/31/97 Reported: 6/ 4/97
Discard: 6/19/97

MOW053097-CA2 Wipe Sample

Morgantown Ordnance Works/Project #70043

Account No: 07867
ICF Kaiser Engineers, Inc.
Gateway View Plaza
1600 W. Carson St.
Pittsburgh PA 15219

P.O. 70043
Rel.

CAT NO.	ANALYSIS NAME	AS RECEIVED RESULTS	LIMIT OF QUANTITATION	UNITS
PCBs in Wipes/Air				
7514	PCB-1016	< 10.	10.	ug
7515	PCB-1221	< 10.	10.	ug
7516	PCB-1232	< 10.	10.	ug
7517	PCB-1242	< 10.	10.	ug
7518	PCB-1248	< 10.	10.	ug
7519	PCB-1254	< 10.	10.	ug
7520	PCB-1260	< 10.	10.	ug

The surrogate data is outside the QC limits in the method blank. Since the sample surrogate data is within the QC limits, the data was reported.

Questions? Contact your Client Services Representative
De Brooks at (717) 656-2300

Respectfully Submitted
Jenifer E. Hess, B.S.
Group Leader Pesticides/PCBs

MEMBER ACIL
Lancaster Laboratories
2425 New Holland Pike
PO Box 12425
Lancaster, PA 17605-2425
717-656-2300 Fax: 717-656-2681

See reverse side for explanation of symbols and abbreviations.

Lancaster Laboratories
A division of Thermo Analytical Inc.

LLI Sample No. SW 2719395
Collected: 5/30/97 at 18:00 by CEH

Submitted: 5/31/97 Reported: 6/ 4/97
Discard: 6/19/97

MOW053097-CA3 Wipe Sample

Morgantown Ordnance Works/Project #70043

Account No: 07867
ICF Kaiser Engineers, Inc.
Gateway View Plaza
1600 W. Carson St.
Pittsburgh PA 15219

P.O. 70043
Rel.

CAT NO.	ANALYSIS NAME	AS RECEIVED RESULTS	LIMIT OF QUANTITATION	UNITS
7512	PCBs in Wipes/Air			See Page 2

1 COPY TO ICF Kaiser Engineers, Inc. ATTN: Mr. Doug Taylor

Questions? Contact your Client Services Representative
De Brooks at (717) 656-2300
21:35:04 D 0001 3 567295
320 0.00 00023750 ASR000

Respectfully Submitted
Christine M. Ratcliff, B.S.
Senior Chemist, GC/MS

MEMBER ACIL
Lancaster Laboratories
2425 New Holland Pike
PO Box 12425
Lancaster, PA 17605-2425
717-656-2300 Fax 717-656-2681

See reverse side for explanation of symbols and abbreviations.

Lancaster Laboratories
A division of Thermo Analytical Inc.

LLI Sample No. SW 2719395
Collected: 5/30/97 at 18:00 by CEH

Submitted: 5/31/97 Reported: 6/ 4/97
Discard: 6/19/97

MOW053097-CA3 Wipe Sample

Morgantown Ordnance Works/Project #70043

Account No: 07867
ICF Kaiser Engineers, Inc.
Gateway View Plaza
1600 W. Carson St.
Pittsburgh PA 15219

P.O. 70043
Rel.

CAT NO.	ANALYSIS NAME	AS RECEIVED RESULTS	LIMIT OF QUANTITATION	UNITS
PCBs in Wipes/Air				
7514	PCB-1016	< 10.	10.	ug
7515	PCB-1221	< 10.	10.	ug
7516	PCB-1232	< 10.	10.	ug
7517	PCB-1242	< 10.	10.	ug
7518	PCB-1248	< 10.	10.	ug
7519	PCB-1254	57.	10.	ug
7520	PCB-1260	< 10.	10.	ug

The surrogate data is outside the QC limits in the method blank. Since the sample surrogate data is within the QC limits, the data was reported.

Questions? Contact your Client Services Representative
De Brooks at (717) 656-2300

Respectfully Submitted
Jenifer E. Hess, B.S.
Group Leader Pesticides/PCBs

MEMBER ACIL
Lancaster Laboratories
2425 New Holland Pike
PO Box 12425
Lancaster, PA 17605-2425
717-656-2300 Fax: 717-656-2681

See reverse side for explanation of symbols and abbreviations.

Lancaster Laboratories
A division of Thermo Analytical Inc.

LLI Sample No. WW 2720025
Collected: 5/29/97 at 11:00 by DA

Submitted: 6/ 3/97 Reported: 6/ 9/97
Discard: 6/17/97

MOW-052997-M14 Grab Water Sample

Morgantown Ordnance - Project No. 70043

Account No: 07867
ICF Kaiser Engineers, Inc.
Gateway View Plaza
1600 W. Carson St.
Pittsburgh PA 15219

P.O. 70043
Rel.

CAT NO.	ANALYSIS NAME	AS RECEIVED RESULTS	LIMIT OF QUANTITATION	UNITS
7043	Aluminum TR	< 0.20	0.20	mg/l
7053	Copper TR	0.0181	0.0040	mg/l
7054	Iron TR	0.37	0.10	mg/l
7055	Lead TR	0.0119	0.0050	mg/l
7058	Manganese TR	0.0813	0.0020	mg/l
7072	Zinc TR	0.100	0.020	mg/l
0259	Mercury	< 0.00020	0.00020	mg/l
1861	PAH's in Water			See Page 2
6030	PCBs in Water		1.0	See Page 3
0539	Benzene	< 1.	1.	ug/l
0553	Base Neutrals			See Page 4
0554	Base Neutrals (cont)			See Page 5
0224	Chloride	8.9	1.0	mg/l
0237	Total Cyanide (water)	0.0101	0.0050	mg/l
0273	Total Organic Carbon	2.8	1.0	mg/l
	The Total Organic Carbon (TOC) result reported above was determined by measuring total carbon by a persulfate digestion/infrared detection method on an acidified sample which has been purged of inorganic carbon using nitrogen. It represents "non-purgeable TOC".			
0434	Phenols (water)	< 0.0050	0.0050	mg/l
1504	Fluoride	< 0.50	0.50	mg/l
0200	pH	6.25	0.010	
0206	Total Suspended Solids	< 9.0	9.0	mg/l
0231	Oil & Grease	< 6.0	6.0	mg/l
	The blank analyzed with this sample contained 2.0 mg/l of oil and grease. As directed in EPA method 413.1, the data reported above was corrected for the blank value.			
1553	Chemical Oxygen Demand	8.3	8.0	mg/l
6914	Ammonia-Nitrogen	< 0.20	0.20	mg/l

1 COPY TO ICF Kaiser Engineers, Inc. ATTN: Mr. Doug Taylor

Questions? Contact your Client Services Representative
De Brooks at (717) 656-2300
22:30:06 D 0001 2 130462 567478
320 0.00 00120940 ASR000

Respectfully Submitted
Ramona V. Layman
Manager, Metals/Leachates

MEMBER ACIL
Lancaster Laboratories
2425 New Holland Pike
PO Box 12425
Lancaster, PA 17605-2425
717-656-2300 Fax: 717-656-2681

See reverse side for explanation of symbols and abbreviations.

Lancaster Laboratories
A division of Thermo Analytical Inc.

LLI Sample No. WW 2720025
Collected: 5/29/97 at 11:00 by DA

Submitted: 6/ 3/97 Reported: 6/ 9/97
Discard: 6/17/97

MOW-052997-M14 Grab Water Sample

Morgantown Ordnance - Project No. 70043

Account No: 07867
ICF Kaiser Engineers, Inc.
Gateway View Plaza
1600 W. Carson St.
Pittsburgh PA 15219

P.O. 70043
Rel.

CAT NO.	ANALYSIS NAME	AS RECEIVED RESULTS	LIMIT OF QUANTITATION	UNITS
PAH's in Water				
3280	Naphthalene	< 10.	10.	ug/l
3281	Acenaphthylene	< 20.	20.	ug/l
3282	Acenaphthene	< 20.	20.	ug/l
3283	Fluorene	< 2.0	2.0	ug/l
3284	Phenanthrene	< 2.0	2.0	ug/l
3285	Anthracene	< 1.0	1.0	ug/l
3286	Fluoranthene	< 0.50	0.50	ug/l
3287	Pyrene	< 2.0	2.0	ug/l
3288	Benzo(a)anthracene	< 0.10	0.10	ug/l
3289	Chrysene	< 1.0	1.0	ug/l
3290	Benzo(b)fluoranthene	< 0.20	0.20	ug/l
3291	Benzo(k)fluoranthene	< 0.10	0.10	ug/l
3292	Benzo(a)pyrene	< 0.20	0.20	ug/l
3293	Dibenzo(a,h)anthracene	< 0.20	0.20	ug/l
3294	Benzo(g,h,i)perylene	< 0.50	0.50	ug/l
3295	Indeno(1,2,3-cd)pyrene	< 0.50	0.50	ug/l

Questions? Contact your Client Services Representative
De Brooks at (717) 656-2300

Respectfully Submitted
Jenifer E. Hess, B.S.
Group Leader Pesticides/PCBs

MEMBER ACIL
Lancaster Laboratories
2425 New Holland Pike
PO Box 12425
Lancaster, PA 17605-2425
717-656-2300 Fax: 717-656-2681

See reverse side for explanation of symbols and abbreviations.

Lancaster Laboratories
A division of Thermo Analytical Inc.

LLI Sample No. WW 2720025
Collected: 5/29/97 at 11:00 by DA

Submitted: 6/ 3/97 Reported: 6/ 9/97
Discard: 6/17/97

MOW-052997-M14 Grab Water Sample

Morgantown Ordnance - Project No. 70043

Account No: 07867
ICF Kaiser Engineers, Inc.
Gateway View Plaza
1600 W. Carson St.
Pittsburgh PA 15219

P.O. 70043
Rel.

CAT NO.	ANALYSIS NAME	AS RECEIVED RESULTS	LIMIT OF QUANTITATION	UNITS
PCBs in Water				
0639	PCB-1016	< 0.94	0.94	ug/l
0640	PCB-1221	< 0.94	0.94	ug/l
0641	PCB-1232	< 0.94	0.94	ug/l
0642	PCB-1242	< 0.94	0.94	ug/l
0643	PCB-1248	< 0.94	0.94	ug/l
0644	PCB-1254	2.27	0.94	ug/l
0645	PCB-1260	< 0.94	0.94	ug/l

Questions? Contact your Client Services Representative
De Brooks at (717) 656-2300

MEMBER ACIL
Lancaster Laboratories
2425 New Holland Pike
PO Box 12425
Lancaster, PA 17605-2425
717-656-2300 Fax: 717-656-2681

Respectfully Submitted
Jenifer E. Hess, B.S.
Group Leader Pesticides/PCBs

See reverse side for explanation of symbols and abbreviations.

Lancaster Laboratories
A division of Thermo Analytical Inc.

LLI Sample No. WW 2720025
Collected: 5/29/97 at 11:00 by DA

Submitted: 6/ 3/97 Reported: 6/ 9/97
Discard: 6/17/97

MOW-052997-M14 Grab Water Sample

Morgantown Ordnance - Project No. 70043

Account No: 07867
ICF Kaiser Engineers, Inc.
Gateway View Plaza
1600 W. Carson St.
Pittsburgh PA 15219

P.O. 70043
Rel.

CAT NO.	ANALYSIS NAME	AS RECEIVED RESULTS	LIMIT OF QUANTITATION	UNITS
Base Neutrals				
0689	hexachlorobenzene	< 9.	9.	ug/l

Questions? Contact your Client Services Representative
De Brooks at (717) 656-2300

Respectfully Submitted
Christine M. Ratcliff, B.S.
Senior Chemist, GC/MS

MEMBER ACIL
Lancaster Laboratories
2425 New Holland Pike
PO Box 12425
Lancaster, PA 17605-2425
717-656-2300 Fax: 717-656-2681

See reverse side for explanation of symbols and abbreviations.

Lancaster Laboratories
A division of Thermo Analytical Inc.

LLI Sample No. WW 2720025
Collected: 5/29/97 at 11:00 by DA

Submitted: 6/ 3/97 Reported: 6/ 9/97
Discard: 6/17/97

MOW-052997-M14 Grab Water Sample

Morgantown Ordnance - Project No. 70043

Account No: 07867
ICF Kaiser Engineers, Inc.
Gateway View Plaza
1600 W. Carson St.
Pittsburgh PA 15219

P.O. 70043
Rel.

CAT NO.	ANALYSIS NAME	AS RECEIVED RESULTS	LIMIT OF QUANTITATION	UNITS
Base Neutrals (cont)				

Questions? Contact your Client Services Representative
De Brooks at (717) 656-2300

Respectfully Submitted
Christine M. Ratcliff, B.S.
Senior Chemist, GC/MS

MEMBER ACIL
Lancaster Laboratories
2425 New Holland Pike
PO Box 12425
Lancaster, PA 17605-2425
717-656-2300 Fax: 717-656-2681

See reverse side for explanation of symbols and abbreviations.

Analysis Report

Lancaster Laboratories
A division of Thermo Analytical Inc.

LLI Sample No. WW 2720026
Collected:

Submitted: 6/ 3/97 Reported: 6/ 9/97
Discard: 6/17/97

Trip Blank Water Sample

Morgantown Ordnance - Project No. 70043

Account No: 07867
ICF Kaiser Engineers, Inc.
Gateway View Plaza
1600 W. Carson St.
Pittsburgh PA 15219

P.O. 70043
Rel.

CAT NO.	ANALYSIS NAME	AS RECEIVED RESULTS	LIMIT OF QUANTITATION	UNITS
0539	Benzene	< 1.	1.	ug/l

1 COPY TO ICF Kaiser Engineers, Inc. ATTN: Mr. Doug Taylor

Questions? Contact your Client Services Representative
De Brooks at (717) 656-2300
22:30:32 D 0001 2 130462 567478
320 0.00 00007920 ASR000

Respectfully Submitted
Ramona V. Layman
Manager, Metals/Leachates

MEMBER ACIL
Lancaster Laboratories
2425 New Holland Pike
PO Box 12425
Lancaster, PA 17605-2425
717-656-2300 Fax: 717-656-2681

See reverse side for explanation of symbols and abbreviations

Lancaster Laboratories
A division of Thermo Analytical Inc.

LLI Sample No. WW 2719403
Collected: 5/30/97 at 17:00 by CEH

Submitted: 5/31/97 Reported: 6/ 9/97
Discard: 6/17/97

MOW-053097-M15 Grab Water Sample

Morgantown Ordnance - Project No. 70043

Account No: 07867
ICF Kaiser Engineers, Inc.
Gateway View Plaza
1600 W. Carson St.
Pittsburgh PA 15219

P.O. 70043
Rel.

CAT NO.	ANALYSIS NAME	AS RECEIVED RESULTS	LIMIT OF QUANTITATION	UNITS
7043	Aluminum TR	< 0.20	0.20	mg/l
7053	Copper TR	0.0260	0.0040	mg/l
7054	Iron TR	0.53	0.10	mg/l
7055	Lead TR	0.0115	0.0050	mg/l
7058	Manganese TR	0.122	0.0020	mg/l
7072	Zinc TR	0.074	0.020	mg/l
0259	Mercury	0.00025	0.00020	mg/l
1861	PAH's in Water			See Page 2
6030	PCBs in Water		1.0	See Page 3
0539	Benzene	< 1.	1.	ug/l
0553	Base Neutrals			See Page 4
0554	Base Neutrals (cont)			See Page 5
0224	Chloride	12.0	1.0	mg/l
0237	Total Cyanide (water)	0.0302	0.0050	mg/l
0273	Total Organic Carbon	3.0	1.0	mg/l
	The Total Organic Carbon (TOC) result reported above was determined by measuring total carbon by a persulfate digestion/infrared detection method on an acidified sample which has been purged of inorganic carbon using nitrogen. It represents "non-purgeable TOC".			
0434	Phenols (water)	< 0.0050	0.0050	mg/l
1504	Fluoride			mg/l
0200	pH	7.43	0.010	
0206	Total Suspended Solids	< 9.0	9.0	mg/l
0231	Oil & Grease	< 6.0	6.0	mg/l
	The blank analyzed with this sample contained .8 mg/l of oil and grease. As directed in EPA method 413.1, the data reported above was corrected for the blank value.			
4001	Chemical Oxygen Demand	53.	50.	mg/l
6914	Ammonia-Nitrogen	< 0.20	0.20	mg/l

1 COPY TO ICF Kaiser Engineers, Inc. ATTN: Mr. Doug Taylor

Questions? Contact your Client Services Representative
De Brooks at (717) 656-2300
07:31:29 D 0001 2 130462 567298
320 0.00 00121137 ASR000

Respectfully Submitted
Ramona V. Layman
Manager, Metals/Leachates

MEMBER ACIL
Lancaster Laboratories
2425 New Holland Pike
PO Box 12425
Lancaster, PA 17605-2425
717-656-2300 Fax 717-656-2681

See reverse side for explanation of symbols and abbreviations

Lancaster Laboratories
A division of Thermo Analytical Inc.

LLI Sample No. WW 2719403
Collected: 5/30/97 at 17:00 by CEH

Submitted: 5/31/97 Reported: 6/ 9/97
Discard: 6/17/97

MOW-053097-M15 Grab Water Sample

Morgantown Ordnance - Project No. 70043

Account No: 07867
ICF Kaiser Engineers, Inc.
Gateway View Plaza
1600 W. Carson St.
Pittsburgh PA 15219

P.O. 70043
Rel.

CAT NO.	ANALYSIS NAME	AS RECEIVED RESULTS	LIMIT OF QUANTITATION	UNITS
PAH's in Water				
3280	Naphthalene	< 13.	13.	ug/l
3281	Acenaphthylene	< 25.	25.	ug/l
3282	Acenaphthene	< 25.	25.	ug/l
3283	Fluorene	< 2.5	2.5	ug/l
3284	Phenanthrene	< 2.5	2.5	ug/l
3285	Anthracene	< 1.3	1.3	ug/l
3286	Fluoranthene	< 0.63	0.63	ug/l
3287	Pyrene	< 2.5	2.5	ug/l
3288	Benzo(a)anthracene	< 0.13	0.13	ug/l
3289	Chrysene	< 1.3	1.3	ug/l
3290	Benzo(b)fluoranthene	< 0.25	0.25	ug/l
3291	Benzo(k)fluoranthene	< 0.13	0.13	ug/l
3292	Benzo(a)pyrene	< 0.25	0.25	ug/l
3293	Dibenzo(a,h)anthracene	< 0.25	0.25	ug/l
3294	Benzo(g,h,i)perylene	< 0.63	0.63	ug/l
3295	Indeno(1,2,3-cd)pyrene	< 0.63	0.63	ug/l

Due to insufficient sample size, we were unable to report our usual quantitation limits. The values reported represent the lowest quantitation limits obtainable. The insufficient sample size was a result of a sample reextraction.

Questions? Contact your Client Services Representative
De Brooks at (717) 656-2300

Respectfully Submitted
Jenifer E. Hess, B.S.
Group Leader Pesticides/PCBs

MEMBER ACIL
Lancaster Laboratories
2425 New Holland Pike
PO Box 12425
Lancaster, PA 17605-2425
717-656-2300 Fax 717-656-2681

See reverse side for explanation of symbols and abbreviations.

Lancaster Laboratories
A division of Thermo Analytical Inc.

LLI Sample No. WW 2719403
Collected: 5/30/97 at 17:00 by CEH

Submitted: 5/31/97 Reported: 6/ 9/97
Discard: 6/17/97

MOW-053097-M15 Grab Water Sample

Morgantown Ordnance - Project No. 70043

Account No: 07867
ICF Kaiser Engineers, Inc.
Gateway View Plaza
1600 W. Carson St.
Pittsburgh PA 15219

P.O. 70043
Rel.

CAT NO.	ANALYSIS NAME	AS RECEIVED RESULTS	LIMIT OF QUANTITATION	UNITS
PCBs in Water				
0639	PCB-1016	< 1.0	1.0	ug/l
0640	PCB-1221	< 1.0	1.0	ug/l
0641	PCB-1232	< 1.0	1.0	ug/l
0642	PCB-1242	< 1.0	1.0	ug/l
0643	PCB-1248	< 1.0	1.0	ug/l
0644	PCB-1254	1.4	1.0	ug/l
0645	PCB-1260	< 1.0	1.0	ug/l

Questions? Contact your Client Services Representative
De Brooks at (717) 656-2300

Respectfully Submitted
Jenifer E. Hess, B.S.
Group Leader Pesticides/PCBs

MEMBER ACIL
Lancaster Laboratories
2425 New Holland Pike
PO Box 12425
Lancaster, PA 17605-2425
717-656-2300 Fax: 717-656-2681

See reverse side for explanation of symbols and abbreviations.

Lancaster Laboratories
A division of Thermo Analytical Inc.

LLI Sample No. WW 2719403
Collected: 5/30/97 at 17:00 by CEH

Submitted: 5/31/97 Reported: 6/ 9/97
Discard: 6/17/97

MOW-053097-M15 Grab Water Sample

Morgantown Ordnance - Project No. 70043

Account No: 07867
ICF Kaiser Engineers, Inc.
Gateway View Plaza
1600 W. Carson St.
Pittsburgh PA 15219

P.O. 70043
Rel.

CAT NO.	ANALYSIS NAME	AS RECEIVED RESULTS	LIMIT OF QUANTITATION	UNITS
Base Neutrals				
0689	hexachlorobenzene	< 10.	10.	ug/l

Questions? Contact your Client Services Representative
De Brooks at (717) 656-2300

MEMBER ACIL
Lancaster Laboratories
2425 New Holland Pike
PO Box 12425
Lancaster, PA 17605-2425
717-656-2300 Fax: 717-656-2681

Respectfully Submitted
Christine M. Ratcliff, B.S.
Senior Chemist, GC/MS

See reverse side for explanation of symbols and abbreviations.

Lancaster Laboratories
A division of Thermo Analytical Inc.

LLI Sample No. WW 2719403
Collected: 5/30/97 at 17:00 by CEH

Submitted: 5/31/97 Reported: 6/ 9/97
Discard: 6/17/97

MOW-053097-M15 Grab Water Sample

Morgantown Ordnance - Project No. 70043

Account No: 07867
ICF Kaiser Engineers, Inc.
Gateway View Plaza
1600 W. Carson St.
Pittsburgh PA 15219

P.O. 70043
Rel.

CAT NO.	ANALYSIS NAME	AS RECEIVED RESULTS	LIMIT OF QUANTITATION	UNITS
Base Neutrals (cont)				

Questions? Contact your Client Services Representative
De Brooks at (717) 656-2300

Respectfully Submitted
Christine M. Ratcliff, B.S.
Senior Chemist, GC/MS

MEMBER ACIL
Lancaster Laboratories
2425 New Holland Pike
PO Box 12425
Lancaster, PA 17605-2425
717-656-2300 Fax: 717-656-2681

See reverse side for explanation of symbols and abbreviations.

Lancaster Laboratories
A division of Thermo Analytical Inc.

LLI Sample No. WW 2720021
Collected: 6/ 2/97 at 13:00 by DC

Submitted: 6/ 3/97 Reported: 6/10/97
Discard: 6/25/97

MOW-060297-C17 Grab Water Sample

Morgantown Ordnance - Project No. 70043

Account No: 07867
ICF Kaiser Engineers, Inc.
Gateway View Plaza
1600 W. Carson St.
Pittsburgh PA 15219

P.O. 70043
Rel.

CAT NO.	ANALYSIS NAME	AS RECEIVED RESULTS	LIMIT OF QUANTITATION	UNITS
7043	Aluminum TR	< 0.20	0.20	mg/l
7053	Copper TR	0.0149	0.0040	mg/l
7054	Iron TR	8.35	0.10	mg/l
7055	Lead TR	< 0.0050	0.0050	mg/l
7058	Manganese TR	0.746	0.0020	mg/l
7072	Zinc TR	0.107	0.020	mg/l
0259	Mercury	< 0.00020	0.00020	mg/l
1861	PAH's in Water			See Page 2
6030	PCBs in Water		1.0	See Page 3
0539	Benzene	< 1.	1.	ug/l
0553	Base Neutrals			See Page 4
0554	Base Neutrals (cont)			See Page 5
0224	Chloride	5.5	1.0	mg/l
0237	Total Cyanide (water)	0.0090	0.0050	mg/l
0273	Total Organic Carbon	4.7	1.0	mg/l
	The Total Organic Carbon (TOC) result reported above was determined by measuring total carbon by a persulfate digestion/infrared detection method on an acidified sample which has been purged of inorganic carbon using nitrogen. It represents "non-purgeable TOC".			
0434	Phenols (water)	0.182	0.0050	mg/l
1504	Fluoride	0.56	0.50	mg/l
0200	pH	5.78	0.010	
0206	Total Suspended Solids	36.8	9.0	mg/l
0231	Oil & Grease	< 6.0	6.0	mg/l
	The blank analyzed with this sample contained 2.0 mg/l of oil and grease. As directed in EPA method 413.1, the data reported above was corrected for the blank value.			
1553	Chemical Oxygen Demand	13.1	8.0	mg/l
6914	Ammonia-Nitrogen	1.86	0.20	mg/l

1 COPY TO ICF Kaiser Engineers, Inc. ATTN: Mr. Doug Taylor

Questions? Contact your Client Services Representative
De Brooks at (717) 656-2300
03:37:43 D 0001 4 130462 567477
0.00 00120940 ASR000

Respectfully Submitted
Ramona V. Layman
Manager, Metals/Leachates

MEMBER ACIL
Lancaster Laboratories
2425 New Holland Pike
PO Box 12425
Lancaster, PA 17605-2425
717-656-2300 Fax: 717-656-2681

See reverse side for explanation of symbols and abbreviations.

Lancaster Laboratories
A division of Thermo Analytical Inc.

LLI Sample No. WW 2720021
Collected: 6/ 2/97 at 13:00 by DC

Submitted: 6/ 3/97 Reported: 6/10/97
Discard: 6/25/97

MOW-060297-C17 Grab Water Sample

Morgantown Ordnance - Project No. 70043

Account No: 07867
ICF Kaiser Engineers, Inc.
Gateway View Plaza
1600 W. Carson St.
Pittsburgh PA 15219

P.O. 70043
Rel.

CAT NO.	ANALYSIS NAME	AS RECEIVED RESULTS	LIMIT OF QUANTITATION	UNITS
PAH's in Water				
3280	Naphthalene	< 10.	10.	ug/l
3281	Acenaphthylene	< 20.	20.	ug/l
3282	Acenaphthene	< 20.	20.	ug/l
3283	Fluorene	< 2.0	2.0	ug/l
3284	Phenanthrene	< 2.0	2.0	ug/l
3285	Anthracene	< 1.0	1.0	ug/l
3286	Fluoranthene	< 0.50	0.50	ug/l
3287	Pyrene	< 2.0	2.0	ug/l
3288	Benzo(a)anthracene	< 0.10	0.10	ug/l
3289	Chrysene	< 1.0	1.0	ug/l
3290	Benzo(b)fluoranthene	< 0.20	0.20	ug/l
3291	Benzo(k)fluoranthene	< 0.10	0.10	ug/l
3292	Benzo(a)pyrene	< 0.20	0.20	ug/l
3293	Dibenzo(a,h)anthracene	< 0.20	0.20	ug/l
3294	Benzo(g,h,i)perylene	< 0.50	0.50	ug/l
3295	Indeno(1,2,3-cd)pyrene	< 0.50	0.50	ug/l

Questions? Contact your Client Services Representative
De Brooks at (717) 656-2300

Respectfully Submitted
Jenifer E. Hess, B.S.
Group Leader Pesticides/PCBs

MEMBER ACIL
Lancaster Laboratories
2425 New Holland Pike
PO Box 12425
Lancaster, PA 17605-2425
717-656-2300 Fax: 717-656-2681

See reverse side for explanation of symbols and abbreviations.

Lancaster Laboratories
A division of Thermo Analytical Inc.

LLI Sample No. WW 2720021
Collected: 6/ 2/97 at 13:00 by DC

Submitted: 6/ 3/97 Reported: 6/10/97
Discard: 6/25/97

MOW-060297-C17 Grab Water Sample

Morgantown Ordnance - Project No. 70043

Account No: 07867
ICF Kaiser Engineers, Inc.
Gateway View Plaza
1600 W. Carson St.
Pittsburgh PA 15219

P.O. 70043
Rel.

CAT NO.	ANALYSIS NAME	AS RECEIVED RESULTS	LIMIT OF QUANTITATION	UNITS
PCBs in Water				
0639	PCB-1016	< 1.0	1.0	ug/l
0640	PCB-1221	< 1.0	1.0	ug/l
0641	PCB-1232	< 1.0	1.0	ug/l
0642	PCB-1242	< 1.0	1.0	ug/l
0643	PCB-1248	< 1.0	1.0	ug/l
0644	PCB-1254	< 1.0	1.0	ug/l
0645	PCB-1260	< 1.0	1.0	ug/l

Questions? Contact your Client Services Representative
De Brooks at (717) 656-2300

Respectfully Submitted
Jenifer E. Hess, B.S.
Group Leader Pesticides/PCBs

MEMBER ACIL
Lancaster Laboratories
2425 New Holland Pike
PO Box 12425
Lancaster, PA 17605-2425
717-656-2300 Fax: 717-656-2681

See reverse side for explanation of symbols and abbreviations.

Lancaster Laboratories
A division of Thermo Analytical Inc.

LLI Sample No. WW 2720021
Collected: 6/ 2/97 at 13:00 by DC

Submitted: 6/ 3/97 Reported: 6/10/97
Discard: 6/25/97

MOW-060297-C17 Grab Water Sample

Morgantown Ordnance - Project No. 70043

Account No: 07867
ICF Kaiser Engineers, Inc.
Gateway View Plaza
1600 W. Carson St.
Pittsburgh PA 15219

P.O. 70043
Rel.

CAT NO.	ANALYSIS NAME	AS RECEIVED RESULTS	LIMIT OF QUANTITATION	UNITS
Base Neutrals				
0689	hexachlorobenzene	< 10.	10.	ug/l

Questions? Contact your Client Services Representative
De Brooks at (717) 656-2300

Lancaster Laboratories
2425 New Holland Pike
PO Box 12425
Lancaster, PA 17605-2425
717-656-2300 Fax: 717-656-2681

MEMBER ACIL

Respectfully Submitted
Christine M. Ratcliff, B.S.
Senior Chemist, GC/MS

See reverse side for explanation of symbols and abbreviations

Lancaster Laboratories
A division of Thermo Analytical Inc.

LLI Sample No. WW 2720021
Collected: 6/ 2/97 at 13:00 by DC

Submitted: 6/ 3/97 Reported: 6/10/97
Discard: 6/25/97

MOW-060297-C17 Grab Water Sample

Morgantown Ordnance - Project No. 70043

Account No: 07867
ICF Kaiser Engineers, Inc.
Gateway View Plaza
1600 W. Carson St.
Pittsburgh PA 15219

P.O. 70043
Rel.

CAT NO.	ANALYSIS NAME	AS RECEIVED RESULTS	LIMIT OF QUANTITATION	UNITS
Base Neutrals (cont)				

Questions? Contact your Client Services Representative
De Brooks at (717) 656-2300

Respectfully Submitted
Christine M. Ratcliff, B.S.
Senior Chemist, GC/MS

MEMBER ACIL
Lancaster Laboratories
2425 New Holland Pike
PO Box 12425
Lancaster, PA 17605-2425
717-656-2300 Fax: 717-656-2681

See reverse side for explanation of symbols and abbreviations.

Lancaster Laboratories
A division of Thermo Analytical Inc.

LLI Sample No. SW 2720022
Collected: 6/ 2/97 at 13:00 by DC

Submitted: 6/ 3/97 Reported: 6/10/97
Discard: 6/25/97

MOW-060297-CA4 Wipe Sample

Morgantown Ordnance - Project No. 70043

Account No: 07867
ICF Kaiser Engineers, Inc.
Gateway View Plaza
1600 W. Carson St.
Pittsburgh PA 15219

P.O. 70043
Rel.

CAT NO.	ANALYSIS NAME	AS RECEIVED RESULTS	LIMIT OF QUANTITATION	UNITS
7512	PCBs in Wipes/Air			See Page 2

1 COPY TO ICF Kaiser Engineers, Inc. ATTN: Mr. Doug Taylor

Questions? Contact your Client Services Representative
De Brooks at (717) 656-2300
03:38:19 D 0001 4 130462 567477
0.00 00022500 ASR000

Respectfully Submitted
Ramona V. Layman
Manager, Metals/Leachates

MEMBER ACIL
Lancaster Laboratories
2425 New Holland Pike
PO Box 12425
Lancaster, PA 17605-2425
717-656-2300 Fax: 717-656-2681

See reverse side for explanation of symbols and abbreviations

Lancaster Laboratories
A division of Thermo Analytical Inc.

LLI Sample No. SW 2720022
Collected: 6/ 2/97 at 13:00 by DC

Submitted: 6/ 3/97 Reported: 6/10/97
Discard: 6/25/97

MOW-060297-CA4 Wipe Sample

Morgantown Ordnance - Project No. 70043

Account No: 07867
ICF Kaiser Engineers, Inc.
Gateway View Plaza
1600 W. Carson St.
Pittsburgh PA 15219

P.O. 70043
Rel.

CAT NO.	ANALYSIS NAME	AS RECEIVED RESULTS	LIMIT OF QUANTITATION	UNITS
PCBs in Wipes/Air				
7514	PCB-1016	< 1.0	1.0	ug
7515	PCB-1221	< 1.0	1.0	ug
7516	PCB-1232	< 1.0	1.0	ug
7517	PCB-1242	< 1.0	1.0	ug
7518	PCB-1248	< 1.0	1.0	ug
7519	PCB-1254	57.5	1.0	ug
7520	PCB-1260	< 1.0	1.0	ug

Questions? Contact your Client Services Representative
De Brooks at (717) 656-2300

Respectfully Submitted
Jenifer E. Hess, B.S.
Group Leader Pesticides/PCBs

MEMBER ACIL
Lancaster Laboratories
2425 New Holland Pike
PO Box 12425
Lancaster, PA 17605-2425
717-656-2300 Fax: 717-656-2681

See reverse side for explanation of symbols and abbreviations.

Lancaster Laboratories
A division of Thermo Analytical Inc.

LLI Sample No. SW 2720023
Collected: 6/ 2/97 at 13:00 by DC

Submitted: 6/ 3/97 Reported: 6/10/97
Discard: 6/25/97

MOW-060297-CA5 Wipe Sample

Morgantown Ordnance - Project No. 70043

Account No: 07867
ICF Kaiser Engineers, Inc.
Gateway View Plaza
1600 W. Carson St.
Pittsburgh PA 15219

P.O. 70043
Rel.

CAT NO.	ANALYSIS NAME	AS RECEIVED RESULTS	LIMIT OF QUANTITATION	UNITS
7512	PCBs in Wipes/Air			

See Page 2

1 COPY TO ICF Kaiser Engineers, Inc. ATTN: Mr. Doug Taylor

Questions? Contact your Client Services Representative
De Brooks at (717) 656-2300
03:38:29 D 0001 4 130462 567477
0.00 00022500 ASR000

Respectfully Submitted
Ramona V. Layman
Manager, Metals/Leachates

MEMBER ACIL
Lancaster Laboratories
2425 New Holland Pike
PO Box 12425
Lancaster, PA 17605-2425
717-656-2300 Fax: 717-656-2681

See reverse side for explanation of symbols and abbreviations.

Lancaster Laboratories
A division of Thermo Analytical Inc.

LLI Sample No. SW 2720023
Collected: 6/ 2/97 at 13:00 by DC

Submitted: 6/ 3/97 Reported: 6/10/97
Discard: 6/25/97

MOW-060297-CA5 Wipe Sample

Morgantown Ordnance - Project No. 70043

Account No: 07867
ICF Kaiser Engineers, Inc.
Gateway View Plaza
1600 W. Carson St.
Pittsburgh PA 15219

P.O. 70043
Rel.

CAT NO.	ANALYSIS NAME	AS RECEIVED RESULTS	LIMIT OF QUANTITATION	UNITS
PCBs in Wipes/Air				
7514	PCB-1016	< 1.0	1.0	ug
7515	PCB-1221	< 1.0	1.0	ug
7516	PCB-1232	< 1.0	1.0	ug
7517	PCB-1242	< 1.0	1.0	ug
7518	PCB-1248	< 1.0	1.0	ug
7519	PCB-1254	19.2	1.0	ug
7520	PCB-1260	< 1.0	1.0	ug

Questions? Contact your Client Services Representative
De Brooks at (717) 656-2300

Respectfully Submitted
Jenifer E. Hess, B.S.
Group Leader Pesticides/PCBs

MEMBER ACIL
Lancaster Laboratories
2425 New Holland Pike
PO Box 12425
Lancaster, PA 17605-2425
717-656-2300 Fax: 717-656-2681

See reverse side for explanation of symbols and abbreviations

Analysis Report

Lancaster Laboratories
A division of Thermo Analytical Inc.

LLI Sample No. WW 2720024
Collected:

Submitted: 6/ 3/97 Reported: 6/10/97
Discard: 6/25/97

Trip Blank Water Sample

Morgantown Ordnance - Project No. 70043

Account No: 07867
ICF Kaiser Engineers, Inc.
Gateway View Plaza
1600 W. Carson St.
Pittsburgh PA 15219

P.O. 70043
Rel.

CAT NO.	ANALYSIS NAME	AS RECEIVED RESULTS	LIMIT OF QUANTITATION	UNITS
0539	Benzene	< 1:	1.	ug/l

1 COPY TO ICF Kaiser Engineers, Inc. ATTN: Mr. Doug Taylor

Questions? Contact your Client Services Representative
De Brooks at (717) 656-2300
03:38:40 D 0001 4 130462 567477
0.00 00007920 ASR000

Respectfully Submitted
Ramona V. Layman
Manager, Metals/Leachates

MEMBER ACIL
Lancaster Laboratories
2425 New Holland Pike
PO Box 12425
Lancaster, PA 17605-2425
717-656-2300 Fax: 717-656-2681

See reverse side for explanation of symbols and abbreviations

Lancaster Laboratories
A division of Thermo Analytical Inc.

LLI Sample No. G5 2721396
Collected: 6/ 4/97 at 16:30 by DA

Submitted: 6/ 5/97 Reported: 6/ 9/97
Discard: 6/24/97

MOW-060497-CA-6 Grab Wipe Sample

Morgantown Ordnance - Project No. 70043

Account No: 07867
ICF Kaiser Engineers, Inc.
Gateway View Plaza
1600 W. Carson St.
Pittsburgh PA 15219

P.O. 70043
Rel.

CAT NO.	ANALYSIS NAME	AS RECEIVED RESULTS	LIMIT OF QUANTITATION	UNITS
7512	PCBs in Wipes/Air			See Page 2

1 COPY TO ICF Kaiser Engineers, Inc. ATTN: Mr. Doug Taylor

Questions? Contact your Client Services Representative
De Brooks at (717) 656-2300
22:43:00 D 0001 3 130462 567883
320 0.00 00024700 ASR000

Respectfully Submitted
Ramona V. Layman
Manager, Metals/Leachates

MEMBER ACIL
Lancaster Laboratories
2425 New Holland Pike
PO Box 12425
Lancaster, PA 17605-2425
717-656-2300 Fax: 717-656-2681

See reverse side for explanation of symbols and abbreviations

Lancaster Laboratories
A division of Thermo Analytical Inc.

LLI Sample No. G5 2721396
Collected: 6/ 4/97 at 16:30 by DA

Submitted: 6/ 5/97 Reported: 6/ 9/97
Discard: 6/24/97

MOW-060497-CA-6 Grab Wipe Sample

Morgantown Ordnance - Project No. 70043

Account No: 07867
ICF Kaiser Engineers, Inc.
Gateway View Plaza
1600 W. Carson St.
Pittsburgh PA 15219

P.O. 70043
Rel.

CAT NO.	ANALYSIS NAME	AS RECEIVED RESULTS	LIMIT OF QUANTITATION	UNITS
PCBs in Wipes/Air				
7514	PCB-1016	< 1.0	1.0	ug
7515	PCB-1221	< 1.0	1.0	ug
7516	PCB-1232	< 1.0	1.0	ug
7517	PCB-1242	< 1.0	1.0	ug
7518	PCB-1248	< 1.0	1.0	ug
7519	PCB-1254	2.1	1.0	ug
7520	PCB-1260	< 1.0	1.0	ug

Questions? Contact your Client Services Representative
De Brooks at (717) 656-2300

Respectfully Submitted
Jenifer E. Hess, B.S.
Group Leader Pesticides/PCBs

MEMBER ACIL
Lancaster Laboratories
2425 New Holland Pike
PO Box 12425
Lancaster, PA 17605-2425
717-656-2300 Fax: 717-656-2681

See reverse side for explanation of symbols and abbreviations.

Analysis Report

Lancaster Laboratories
A division of Thermo Analytical Inc.

LLI Sample No. G5 2721397
Collected: 6/ 4/97 at 16:30 by DA

Submitted: 6/ 5/97 Reported: 6/ 9/97
Discard: 6/24/97

MOW-060497-CA-7 Grab Wipe Sample

Morgantown Ordnance - Project No. 70043

Account No: 07867
ICF Kaiser Engineers, Inc.
Gateway View Plaza
1600 W. Carson St.
Pittsburgh PA 15219

P.O. 70043
Rel.

CAT NO.	ANALYSIS NAME	AS RECEIVED RESULTS	LIMIT OF QUANTITATION	UNITS
7512	PCBs in Wipes/Air			See Page 2

1 COPY TO ICF Kaiser Engineers, Inc. ATTN: Mr. Doug Taylor

Questions? Contact your Client Services Representative
De Brooks at (717) 656-2300
22:43:09 D 0001 3 130462 567883
320 0.00 00022500 ASR000

Respectfully Submitted
Ramona V. Layman
Manager, Metals/Leachates

MEMBER ACIL
Lancaster Laboratories
2425 New Holland Pike
PO Box 12425
Lancaster, PA 17605-2425
717-656-2300 Fax: 717-656-2681

See reverse side for explanation of symbols and abbreviations.

Lancaster Laboratories
A division of Thermo Analytical Inc.

LLI Sample No. G5 2721397
Collected: 6/ 4/97 at 16:30 by DA

Submitted: 6/ 5/97 Reported: 6/ 9/97
Discard: 6/24/97

MOW-060497-CA-7 Grab Wipe Sample

Morgantown Ordnance - Project No. 70043

Account No: 07867
ICF Kaiser Engineers, Inc.
Gateway View Plaza
1600 W. Carson St.
Pittsburgh PA 15219

P.O. 70043
Rel.

CAT NO.	ANALYSIS NAME	AS RECEIVED RESULTS	LIMIT OF QUANTITATION	UNITS
PCBs in Wipes/Air				
7514	PCB-1016	< 1.0	1.0	ug
7515	PCB-1221	< 1.0	1.0	ug
7516	PCB-1232	< 1.0	1.0	ug
7517	PCB-1242	< 1.0	1.0	ug
7518	PCB-1248	< 1.0	1.0	ug
7519	PCB-1254	3.7	1.0	ug
7520	PCB-1260	< 1.0	1.0	ug

Questions? Contact your Client Services Representative
De Brooks at (717) 656-2300

Respectfully Submitted
Jenifer E. Hess, B.S.
Group Leader Pesticides/PCBs

MEMBER ACIL
Lancaster Laboratories
2425 New Holland Pike
PO Box 12425
Lancaster, PA 17605-2425
717-656-2300 Fax: 717-656-2681

See reverse side for explanation of symbols and abbreviations

Lancaster Laboratories
A division of Thermo Analytical Inc.

LLI Sample No. G5 2721398
Collected: 6/ 4/97 at 16:30 by DA

Submitted: 6/ 5/97 Reported: 6/ 9/97
Discard: 6/24/97

MOW-060497-CA-8 Grab Wipe Sample

Morgantown Ordnance - Project No. 70043

Account No: 07867
ICF Kaiser Engineers, Inc.
Gateway View Plaza
1600 W. Carson St.
Pittsburgh PA 15219

P.O. 70043
Rel.

CAT NO.	ANALYSIS NAME	AS RECEIVED RESULTS	LIMIT OF QUANTITATION	UNITS
7512	PCBs in Wipes/Air			See Page 2

1 COPY TO ICF Kaiser Engineers, Inc. ATTN: Mr. Doug Taylor

Questions? Contact your Client Services Representative
De Brooks at (717) 656-2300
22:43:18 D 0001 3 130462 567883
320 0.00 00022500 ASR000

Respectfully Submitted
Ramona V. Layman
Manager, Metals/Leachates

MEMBER ACIL
Lancaster Laboratories
2425 New Holland Pike
PO Box 12425
Lancaster, PA 17605-2425
717-656-2300 Fax: 717-656-2681

See reverse side for explanation of symbols and abbreviations

Lancaster Laboratories
A division of Thermo Analytical Inc.

LLI Sample No. G5 2721398
Collected: 6/ 4/97 at 16:30 by DA

Submitted: 6/ 5/97 Reported: 6/ 9/97
Discard: 6/24/97

MOW-060497-CA-8 Grab Wipe Sample

Morgantown Ordnance - Project No. 70043

Account No: 07867
ICF Kaiser Engineers, Inc.
Gateway View Plaza
1600 W. Carson St.
Pittsburgh PA 15219

P.O. 70043
Rel.

CAT NO.	ANALYSIS NAME	AS RECEIVED RESULTS	LIMIT OF QUANTITATION	UNITS
PCBs in Wipes/Air				
7514	PCB-1016	< 1.0	1.0	ug
7515	PCB-1221	< 1.0	1.0	ug
7516	PCB-1232	< 1.0	1.0	ug
7517	PCB-1242	< 1.0	1.0	ug
7518	PCB-1248	< 1.0	1.0	ug
7519	PCB-1254	1.8	1.0	ug
7520	PCB-1260	< 1.0	1.0	ug

Questions? Contact your Client Services Representative
De Brooks at (717) 656-2300

Respectfully Submitted
Jenifer E. Hess, B.S.
Group Leader Pesticides/PCBs

MEMBER ACIL
Lancaster Laboratories
2425 New Holland Pike
PO Box 12425
Lancaster, PA 17605-2425
717-656-2300 Fax: 717-656-2681

See reverse side for explanation of symbols and abbreviations.

Lancaster Laboratories
A division of Thermo Analytical Inc.

LLI Sample No. WW 2717936
Collected: 5/27/97 at 08:30 by DA

Submitted: 5/29/97 Reported: 6/11/97
Discard: 6/19/97

MOW-052797-M12 Grab Water Sample

Morgantown Ordnance - Project No. 70043

Account No: 07867
ICF Kaiser Engineers, Inc.
Gateway View Plaza
1600 W. Carson St.
Pittsburgh PA 15219

P.O. 70043
Rel.

CAT NO.	ANALYSIS NAME	AS RECEIVED RESULTS	LIMIT OF QUANTITATION	UNITS
7043	Aluminum TR	0.32	0.20	mg/l
7053	Copper TR	0.0394	0.0040	mg/l
7054	Iron TR	0.77	0.10	mg/l
7055	Lead TR	0.0151	0.0050	mg/l
7058	Manganese TR	0.172	0.0020	mg/l
7072	Zinc TR	0.077	0.020	mg/l
0259	Mercury	0.00140	0.00020	mg/l
1861	PAH's in Water			See Page 2
6030	PCBs in Water		1.0	See Page 3
0539	Benzene	< 1.	1.	ug/l
0553	Base Neutrals			See Page 4
0554	Base Neutrals (cont)			See Page 5
0224	Chloride	18.5	1.0	mg/l
0237	Total Cyanide (water)	0.240	0.0050	mg/l
0273	Total Organic Carbon	4.7	1.0	mg/l
	The Total Organic Carbon (TOC) result reported above was determined by measuring total carbon by a persulfate digestion/infrared detection method on an acidified sample which has been purged of inorganic carbon using nitrogen. It represents "non-purgeable TOC".			
0434	Phenols (water)	0.122	0.0050	mg/l
1504	Fluoride	< 0.50	0.50	mg/l
0200	pH	6.50	0.010	
0206	Total Suspended Solids	27.2	9.0	mg/l
0231	Oil & Grease	< 6.0	6.0	mg/l
	The blank analyzed with this sample contained 3.2 mg/l of oil and grease. As directed in EPA method 413.1, the data reported above was corrected for the blank value.			
4001	Chemical Oxygen Demand	< 50.	50.	mg/l
6914	Ammonia-Nitrogen	< 0.20	0.20	mg/l

1 COPY TO ICF Kaiser Engineers, Inc. ATTN: Mr. Doug Taylor

Questions? Contact your Client Services Representative
De Brooks at (717) 656-2300
07:53:11 D 0001 4 130462 566901
126 0.00 00101773 ASR000

Respectfully Submitted
Ramona V. Layman
Manager, Metals/Leachates

MEMBER ACIL
Lancaster Laboratories
2425 New Holland Pike
PO Box 12425
Lancaster, PA 17605-2425
717-656-2300 Fax: 717-656-2681

See reverse side for explanation of symbols and abbreviations.

Lancaster Laboratories
A division of Thermo Analytical Inc.

LLI Sample No. WW 2717936
Collected: 5/27/97 at 08:30 by DA

Submitted: 5/29/97 Reported: 6/11/97
Discard: 6/19/97

MOW-052797-M12 Grab Water Sample

Morgantown Ordnance - Project No. 70043

Account No: 07867
ICF Kaiser Engineers, Inc.
Gateway View Plaza
1600 W. Carson St.
Pittsburgh PA 15219

P.O. 70043
Rel.

CAT NO.	ANALYSIS NAME	AS RECEIVED RESULTS	LIMIT OF QUANTITATION	UNITS
PAH's in Water				
3280	Naphthalene	< 10.	10.	ug/l
3281	Acenaphthylene	< 20.	20.	ug/l
3282	Acenaphthene	< 20.	20.	ug/l
3283	Fluorene	< 2.0	2.0	ug/l
3284	Phenanthrene	< 2.0	2.0	ug/l
3285	Anthracene	< 1.0	1.0	ug/l
3286	Fluoranthene	< 0.50	0.50	ug/l
3287	Pyrene	< 2.0	2.0	ug/l
3288	Benzo(a)anthracene	< 0.10	0.10	ug/l
3289	Chrysene	< 1.0	1.0	ug/l
3290	Benzo(b)fluoranthene	< 0.20	0.20	ug/l
3291	Benzo(k)fluoranthene	< 0.10	0.10	ug/l
3292	Benzo(a)pyrene	< 0.20	0.20	ug/l
293	Dibenzo(a,h)anthracene	< 0.20	0.20	ug/l
3294	Benzo(g,h,i)perylene	< 0.50	0.50	ug/l
3295	Indeno(1,2,3-cd)pyrene	< 0.50	0.50	ug/l

Questions? Contact your Client Services Representative
De Brooks at (717) 656-2300

Respectfully Submitted
Jenifer E. Hess, B.S.
Group Leader Pesticides/PCBs

MEMBER ACIL
Lancaster Laboratories
2425 New Holland Pike
PO Box 12425
Lancaster, PA 17605-2425
717-656-2300 Fax: 717-656-2681

See reverse side for explanation of symbols and abbreviations.

Lancaster Laboratories
A division of Thermo Analytical Inc.

LLI Sample No. WW 2717936
Collected: 5/27/97 at 08:30 by DA

Submitted: 5/29/97 Reported: 6/11/97
Discard: 6/19/97

MOW-052797-M12 Grab Water Sample

Morgantown Ordnance - Project No. 70043

Account No: 07867
ICF Kaiser Engineers, Inc.
Gateway View Plaza
1600 W. Carson St.
Pittsburgh PA 15219

P.O. 70043
Rel.

CAT NO.	ANALYSIS NAME	AS RECEIVED RESULTS	LIMIT OF QUANTITATION	UNITS
PCBs in Water				
0639	PCB-1016	< 1.0	1.0	ug/l
0640	PCB-1221	< 1.0	1.0	ug/l
0641	PCB-1232	< 1.0	1.0	ug/l
0642	PCB-1242	< 1.0	1.0	ug/l
0643	PCB-1248	< 1.0	1.0	ug/l
0644	PCB-1254	< 1.0	1.0	ug/l
0645	PCB-1260	< 1.0	1.0	ug/l

Questions? Contact your Client Services Representative
De Brooks at (717) 656-2300

Respectfully Submitted
Jenifer E. Hess, B.S.
Group Leader Pesticides/PCBs

MEMBER ACIL
Lancaster Laboratories
2425 New Holland Pike
PO Box 12425
Lancaster, PA 17605-2425
717-656-2300 Fax 717-656-2681

See reverse side for explanation of symbols and abbreviations.

Lancaster Laboratories
A division of Thermo Analytical Inc.

LLI Sample No. WW 2717936
Collected: 5/27/97 at 08:30 by DA

Submitted: 5/29/97 Reported: 6/11/97
Discard: 6/19/97

MOW-052797-M12 Grab Water Sample

Morgantown Ordnance - Project No. 70043

Account No: 07867
ICF Kaiser Engineers, Inc.
Gateway View Plaza
1600 W. Carson St.
Pittsburgh PA 15219

P.O. 70043
Rel.

CAT NO.	ANALYSIS NAME	AS RECEIVED RESULTS	LIMIT OF QUANTITATION	UNITS
Base Neutrals				
0689	hexachlorobenzene	< 9.	9.	ug/l

Questions? Contact your Client Services Representative
De Brooks at (717) 656-2300

Respectfully Submitted
Christine M. Ratcliff, B.S.
Senior Chemist, GC/MS

MEMBER ACIL
Lancaster Laboratories
2425 New Holland Pike
PO Box 12425
Lancaster, PA 17605-2425
717-656-2300 Fax: 717-656-2681

See reverse side for explanation of symbols and abbreviations.

Lancaster Laboratories
A division of Thermo Analytical Inc.

LLI Sample No. WW 2717936
Collected: 5/27/97 at 08:30 by DA

Submitted: 5/29/97 Reported: 6/11/97
Discard: 6/19/97

MOW-052797-M12 Grab Water Sample

Morgantown Ordnance - Project No. 70043

Account No: 07867
ICF Kaiser Engineers, Inc.
Gateway View Plaza
1600 W. Carson St.
Pittsburgh PA 15219

P.O. 70043
Rel.

CAT NO.	ANALYSIS NAME	AS RECEIVED RESULTS	LIMIT OF QUANTITATION	UNITS
Base Neutrals (cont)				

Questions? Contact your Client Services Representative
De Brooks at (717) 656-2300

Respectfully Submitted
Christine M. Ratcliff, B.S.
Senior Chemist, GC/MS

MEMBER ACIL
Lancaster Laboratories
2425 New Holland Pike
PO Box 12425
Lancaster, PA 17605-2425
717-656-2300 Fax: 717-656-2681

See reverse side for explanation of symbols and abbreviations

Lancaster Laboratories
A division of Thermo Analytical Inc.

LLI Sample No. WW 2717937
Collected: 5/27/97 by DA

Submitted: 5/29/97 Reported: 6/11/97
Discard: 6/19/97

MOW-052797-M13 Grab Water Sample

Morgantown Ordnance - Project No. 70043

Account No: 07867
ICF Kaiser Engineers, Inc.
Gateway View Plaza
1600 W. Carson St.
Pittsburgh PA 15219

P.O. 70043
Rel.

CAT NO.	ANALYSIS NAME	AS RECEIVED RESULTS	LIMIT OF QUANTITATION	UNITS
7043	Aluminum TR	0.69	0.20	mg/l
7053	Copper TR	0.0487	0.0040	mg/l
7054	Iron TR	1.50	0.10	mg/l
7055	Lead TR	0.0242	0.0050	mg/l
7058	Manganese TR	0.242	0.0020	mg/l
7072	Zinc TR	0.112	0.020	mg/l
0259	Mercury	0.00142	0.00020	mg/l
1861	PAH's in Water			See Page 2
6030	PCBs in Water		1.0	See Page 3
0539	Benzene	< 1.	1.	ug/l
0553	Base Neutrals			See Page 4
0554	Base Neutrals (cont)			See Page 5
0224	Chloride	28.9	1.0	mg/l
0237	Total Cyanide (water)	0.266	0.0050	mg/l
0273	Total Organic Carbon	7.8	1.0	mg/l
	The Total Organic Carbon (TOC) result reported above was determined by measuring total carbon by a persulfate digestion/infrared detection method on an acidified sample which has been purged of inorganic carbon using nitrogen. It represents "non-purgeable TOC".			
0434	Phenols (water)	0.0515	0.0050	mg/l
1504	Fluoride	< 0.50	0.50	mg/l
0200	pH	6.97	0.010	
0206	Total Suspended Solids	48.	10.	mg/l
0231	Oil & Grease	< 6.0	6.0	mg/l
	The blank analyzed with this sample contained 3.2 mg/l of oil and grease. As directed in EPA method 413.1, the data reported above was corrected for the blank value.			
4001	Chemical Oxygen Demand	< 50.	50.	mg/l
6914	Ammonia-Nitrogen	0.23	0.20	mg/l

1 COPY TO ICF Kaiser Engineers, Inc. ATTN: Mr. Doug Taylor

Questions? Contact your Client Services Representative
De Brooks at (717) 656-2300
07:53:48 D 0001 4 130462 566901
126 0.00 00099573 ASR000

Respectfully Submitted
Ramona V. Layman
Manager, Metals/Leachates

MEMBER ACIL
Lancaster Laboratories
2425 New Holland Pike
PO Box 12425
Lancaster, PA 17605-2425
717-656-2300 Fax: 717-656-2681

See reverse side for explanation of symbols and abbreviations

Lancaster Laboratories
A division of Thermo Analytical Inc.

LLI Sample No. WW 2717937
Collected: 5/27/97 by DA

Submitted: 5/29/97 Reported: 6/11/97
Discard: 6/19/97

MOW-052797-M13 Grab Water Sample

Morgantown Ordnance - Project No. 70043

Account No: 07867
ICF Kaiser Engineers, Inc.
Gateway View Plaza
1600 W. Carson St.
Pittsburgh PA 15219

P.O. 70043
Rel.

CAT NO.	ANALYSIS NAME	AS RECEIVED RESULTS	LIMIT OF QUANTITATION	UNITS
PAH's in Water				
3280	Naphthalene	< 10.	10.	ug/l
3281	Acenaphthylene	< 20.	20.	ug/l
3282	Acenaphthene	< 20.	20.	ug/l
3283	Fluorene	< 2.0	2.0	ug/l
3284	Phenanthrene	< 2.0	2.0	ug/l
3285	Anthracene	< 1.0	1.0	ug/l
3286	Fluoranthene	< 0.50	0.50	ug/l
3287	Pyrene	< 2.0	2.0	ug/l
3288	Benzo(a)anthracene	< 0.10	0.10	ug/l
3289	Chrysene	< 1.0	1.0	ug/l
3290	Benzo(b)fluoranthene	< 0.20	0.20	ug/l
3291	Benzo(k)fluoranthene	< 0.10	0.10	ug/l
3292	Benzo(a)pyrene	< 0.20	0.20	ug/l
3293	Dibenzo(a,h)anthracene	< 0.20	0.20	ug/l
3294	Benzo(g,h,i)perylene	< 0.50	0.50	ug/l
3295	Indeno(1,2,3-cd)pyrene	< 0.50	0.50	ug/l

Questions? Contact your Client Services Representative
De Brooks at (717) 656-2300

Respectfully Submitted
Jenifer E. Hess, B.S.
Group Leader Pesticides/PCBs

MEMBER ACIL
Lancaster Laboratories
2425 New Holland Pike
PO Box 12425
Lancaster, PA 17605-2425
717-656-2300 Fax: 717-656-2681

See reverse side for explanation of symbols and abbreviations.

Lancaster Laboratories
A division of Thermo Analytical Inc.

LLI Sample No. WW 2717937
Collected: 5/27/97 by DA

Submitted: 5/29/97 Reported: 6/11/97
Discard: 6/19/97

MOW-052797-M13 Grab Water Sample

Morgantown Ordnance - Project No. 70043

Account No: 07867
ICF Kaiser Engineers, Inc.
Gateway View Plaza
1600 W. Carson St.
Pittsburgh PA 15219

P.O. 70043
Rel.

CAT NO.	ANALYSIS NAME	AS RECEIVED RESULTS	LIMIT OF QUANTITATION	UNITS
PCBs in Water				
0639	PCB-1016	< 0.94	0.94	ug/l
0640	PCB-1221	< 0.94	0.94	ug/l
0641	PCB-1232	< 0.94	0.94	ug/l
0642	PCB-1242	< 0.94	0.94	ug/l
0643	PCB-1248	< 0.94	0.94	ug/l
0644	PCB-1254	< 0.94	0.94	ug/l
0645	PCB-1260	< 0.94	0.94	ug/l

Questions? Contact your Client Services Representative
De Brooks at (717) 656-2300

Respectfully Submitted
Jenifer E. Hess, B.S.
Group Leader Pesticides/PCBs

MEMBER ACIL
Lancaster Laboratories
2425 New Holland Pike
PO Box 12425
Lancaster, PA 17605-2425
717-656-2300 Fax 717-656-2681

See reverse side for explanation of symbols and abbreviations.

Lancaster Laboratories
A division of Thermo Analytical Inc.

LLI Sample No. WW 2717937
Collected: 5/27/97 by DA

Submitted: 5/29/97 Reported: 6/11/97
Discard: 6/19/97

MOW-052797-M13 Grab Water Sample

Morgantown Ordnance - Project No. 70043

Account No: 07867
ICF Kaiser Engineers, Inc.
Gateway View Plaza
1600 W. Carson St.
Pittsburgh PA 15219

P.O. 70043
Rel.

CAT NO.	ANALYSIS NAME	AS RECEIVED RESULTS	LIMIT OF QUANTITATION	UNITS
Base Neutrals				
0689	hexachlorobenzene	< 9.	9.	ug/l

Questions? Contact your Client Services Representative
De Brooks at (717) 656-2300

Respectfully Submitted
Christine M. Ratcliff, B.S.
Senior Chemist, GC/MS

MEMBER ACIL
Lancaster Laboratories
2425 New Holland Pike
PO Box 12425
Lancaster, PA 17605-2425
717-656-2300 Fax: 717-656-2681

See reverse side for explanation of symbols and abbreviations.

Lancaster Laboratories
A division of Thermo Analytical Inc.

LLI Sample No. WW 2717937
Collected: 5/27/97 by DA

Submitted: 5/29/97 Reported: 6/11/97
Discard: 6/19/97

MOW-052797-M13 Grab Water Sample

Morgantown Ordnance - Project No. 70043

Account No: 07867
ICF Kaiser Engineers, Inc.
Gateway View Plaza
1600 W. Carson St.
Pittsburgh PA 15219

P.O. 70043
Rel.

CAT NO.	ANALYSIS NAME	AS RECEIVED RESULTS	LIMIT OF QUANTITATION	UNITS
Base Neutrals (cont)				

Questions? Contact your Client Services Representative
De Brooks at (717) 656-2300

Respectfully Submitted
Christine M. Ratcliff, B.S.
Senior Chemist, GC/MS

MEMBER ACIL
Lancaster Laboratories
2425 New Holland Pike
PO Box 12425
Lancaster, PA 17605-2425
717-656-2300 Fax: 717-656-2681

See reverse side for explanation of symbols and abbreviations.

Lancaster Laboratories
A division of Thermo Analytical Inc.

LLI Sample No. WW 2717938
Collected:

Submitted: 5/29/97 Reported: 6/11/97
Discard: 6/19/97

Trip Blank Water Sample

Morgantown Ordnance - Project No. 70043

Account No: 07867
ICF Kaiser Engineers, Inc.
Gateway View Plaza
1600 W. Carson St.
Pittsburgh PA 15219

P.O. 70043
Rel.

CAT NO.	ANALYSIS NAME	AS RECEIVED RESULTS	LIMIT OF QUANTITATION	UNITS
0539	Benzene	< 1.	1.	ug/l

1 COPY TO ICF Kaiser Engineers, Inc. ATTN: Mr. Doug Taylor

Questions? Contact your Client Services Representative
De Brooks at (717) 656-2300
07:54:21 D 0001 4 130462 566901
126 0.00 00006601 ASR000

Respectfully Submitted
Ramona V. Layman
Manager, Metals/Leachates

MEMBER ACIL
Lancaster Laboratories
2425 New Holland Pike
PO Box 12425
Lancaster, PA 17605-2425
717-656-2300 Fax: 717-656-2681

See reverse side for explanation of symbols and abbreviations.

Analysis Report

Lancaster Laboratories
A division of Thermo Analytical Inc.

LLI Sample No. SW 2717939
Collected: 5/28/97 at 11:00 by DA

Submitted: 5/29/97 Reported: 6/11/97
Discard: 6/19/97

MOW-052897-TPH Grab Soil Sample

Morgantown Ordnance - Project No. 70043

Account No: 07867
ICF Kaiser Engineers, Inc.
Gateway View Plaza
1600 W. Carson St.
Pittsburgh PA 15219

P.O. 70043
Rel.

CAT NO.	ANALYSIS NAME	AS RECEIVED RESULTS	AS RECEIVED LIMIT OF QUANTITATION	AS RECEIVED UNITS	DRY WEIGHT RESULTS	DRY WEIGHT LIMIT OF QUANTITATION
0111	Moisture	23.3	0.50	% by wt.		
	"Moisture" represents the loss in weight of the sample after oven drying at 103 - 105 degrees Celsius.					
5321	TPH-DRO API (Soils)	15,000.	700.	mg/kg	19,000.	900.
	According to the API Protocol, the quantitation for Diesel Range Organics was performed by peak area comparison of the sample pattern to that of a ten component diesel range reference standard (between C10 and C28 normal hydrocarbons). Due to dilution of the sample made necessary by the high levels of TPH-DRO, normal quantitation limits were not attained.					

1 COPY TO ICF Kaiser Engineers, Inc. ATTN: Mr. Doug Taylor

Questions? Contact your Client Services Representative
De Brooks at (717) 656-2300
07:54:25 D 0001 4 130462 566901
126 0.00 00016790 ASR000

Respectfully Submitted
Ramona V. Layman
Manager, Metals/Leachates

MEMBER ACIL
Lancaster Laboratories
2425 New Holland Pike
PO Box 12425
Lancaster, PA 17605-2425
717-656-2300 Fax: 717-656-2681

See reverse side for explanation of symbols and abbreviations.

Lancaster Laboratories
A division of Thermo Analytical Inc.

LLI Sample No. WW 2719667
Collected: 5/31/97 at 11:30 by CH

Submitted: 6/ 2/97 Reported: 6/11/97
Discard: 6/19/97

MOW-053197-C16 Grab Water Sample

Morgantown Ordnance - Project No. 70043

Account No: 07867
ICF Kaiser Engineers, Inc.
Gateway View Plaza
1600 W. Carson St.
Pittsburgh PA 15219

P.O. 70043
Rel.

CAT NO.	ANALYSIS NAME	AS RECEIVED RESULTS	LIMIT OF QUANTITATION	UNITS
7043	Aluminum TR	0.57	0.20	mg/l
7053	Copper TR	0.204	0.0040	mg/l
7054	Iron TR	33.0	0.10	mg/l
7055	Lead TR	0.0052	0.0050	mg/l
7058	Manganese TR	1.08	0.0020	mg/l
7072	Zinc TR	0.210	0.020	mg/l
0259	Mercury	0.00041	0.00020	mg/l
1861	PAH's in Water			See Page 2
6030	PCBs in Water		1.0	See Page 3
0539	Benzene	< 1.	1.	ug/l
0553	Base Neutrals			See Page 4
0554	Base Neutrals (cont)			See Page 5
0224	Chloride	5.3	1.0	mg/l
0237	Total Cyanide (water)	0.0351	0.0050	mg/l
0273	Total Organic Carbon	7.6	1.0	mg/l
	The Total Organic Carbon (TOC) result reported above was determined by measuring total carbon by a persulfate digestion/infrared detection method on an acidified sample which has been purged of inorganic carbon using nitrogen. It represents "non-purgeable TOC".			
0434	Phenols (water)	0.0793	0.0050	mg/l
1504	Fluoride	< 0.50	0.50	mg/l
0200	pH	5.43	0.010	
0206	Total Suspended Solids	74.	23.	mg/l
0231	Oil & Grease	< 6.0	6.0	mg/l
	The blank analyzed with this sample contained 3.2 mg/l of oil and grease. As directed in EPA method 413.1, the data reported above was corrected for the blank value.			
4001	Chemical Oxygen Demand	< 50.	50.	mg/l
6914	Ammonia-Nitrogen	3.37	0.20	mg/l

1 COPY TO ICF Kaiser Engineers, Inc. ATTN: Mr. Doug Taylor

Questions? Contact your Client Services Representative
De Brooks at (717) 656-2300
08:31:22 D 0001 2 130462 567365
320 0.00 00120890 ASR000

Respectfully Submitted
Ramona V. Layman
Manager, Metals/Leachates

MEMBER ACIL
Lancaster Laboratories
2425 New Holland Pike
PO Box 12425
Lancaster, PA 17605-2425
717-656-2300 Fax: 717-656-2681

See reverse side for explanation of symbols and abbreviations

Lancaster Laboratories
A division of Thermo Analytical Inc.

LLI Sample No. WW 2719667
Collected: 5/31/97 at 11:30 by CH

Submitted: 6/ 2/97 Reported: 6/11/97
Discard: 6/19/97

MOW-053197-C16 Grab Water Sample

Morgantown Ordnance - Project No. 70043

Account No: 07867
ICF Kaiser Engineers, Inc.
Gateway View Plaza
1600 W. Carson St.
Pittsburgh PA 15219

P.O. 70043
Rel.

CAT NO.	ANALYSIS NAME	AS RECEIVED RESULTS	LIMIT OF QUANTITATION	UNITS
PAH's in Water				
3280	Naphthalene	< 10.	10.	ug/l
3281	Acenaphthylene	< 20.	20.	ug/l
3282	Acenaphthene	< 20.	20.	ug/l
3283	Fluorene	< 2.0	2.0	ug/l
3284	Phenanthrene	< 2.0	2.0	ug/l
3285	Anthracene	< 1.0	1.0	ug/l
3286	Fluoranthene	0.79	0.50	ug/l
3287	Pyrene	< 2.0	2.0	ug/l
3288	Benzo(a)anthracene	0.10	0.10	ug/l
3289	Chrysene	< 1.0	1.0	ug/l
3290	Benzo(b)fluoranthene	< 0.20	0.20	ug/l
3291	Benzo(k)fluoranthene	< 0.10	0.10	ug/l
3292	Benzo(a)pyrene	< 0.20	0.20	ug/l
3293	Dibenzo(a,h)anthracene	< 0.20	0.20	ug/l
3294	Benzo(g,h,i)perylene	< 0.50	0.50	ug/l
3295	Indeno(1,2,3-cd)pyrene	< 0.50	0.50	ug/l

Questions? Contact your Client Services Representative
De Brooks at (717) 656-2300

Respectfully Submitted
Jenifer E. Hess, B.S.
Group Leader Pesticides/PCBs

MEMBER ACIL
Lancaster Laboratories
2425 New Holland Pike
PO Box 12425
Lancaster, PA 17605-2425
717-656-2300 Fax: 717-656-2681

See reverse side for explanation of symbols and abbreviations.

Lancaster Laboratories
A division of Thermo Analytical Inc.

LLI Sample No. WW 2719667
Collected: 5/31/97 at 11:30 by CH

Submitted: 6/ 2/97 Reported: 6/11/97
Discard: 6/19/97

MOW-053197-C16 Grab Water Sample

Morgantown Ordnance - Project No. 70043

Account No: 07867
ICF Kaiser Engineers, Inc.
Gateway View Plaza
1600 W. Carson St.
Pittsburgh PA 15219

P.O. 70043
Rel.

CAT NO.	ANALYSIS NAME	AS RECEIVED RESULTS	LIMIT OF QUANTITATION	UNITS
PCBs in Water				
0639	PCB-1016	< 1.0	1.0	ug/l
0640	PCB-1221	< 1.0	1.0	ug/l
0641	PCB-1232	< 1.0	1.0	ug/l
0642	PCB-1242	< 1.0	1.0	ug/l
0643	PCB-1248	< 1.0	1.0	ug/l
0644	PCB-1254	< 1.0	1.0	ug/l
0645	PCB-1260	< 1.0	1.0	ug/l

Questions? Contact your Client Services Representative
De Brooks at (717) 656-2300

Respectfully Submitted
Jenifer E. Hess, B.S.
Group Leader Pesticides/PCBs

MEMBER ACIL
Lancaster Laboratories
2425 New Holland Pike
PO Box 12425
Lancaster, PA 17605-2425
717-656-2300 Fax: 717-656-2681

See reverse side for explanation of symbols and abbreviations.

Lancaster Laboratories
A division of Thermo Analytical Inc.

LLI Sample No. WW 2719667
Collected: 5/31/97 at 11:30 by CH

Submitted: 6/ 2/97 Reported: 6/11/97
Discard: 6/19/97

MOW-053197-C16 Grab Water Sample

Morgantown Ordnance - Project No. 70043

Account No: 07867
ICF Kaiser Engineers, Inc.
Gateway View Plaza
1600 W. Carson St.
Pittsburgh PA 15219

P.O. 70043
Rel.

CAT NO.	ANALYSIS NAME	AS RECEIVED RESULTS	LIMIT OF QUANTITATION	UNITS
Base Neutrals				
0689	hexachlorobenzene	< 10.	10.	ug/l

Questions? Contact your Client Services Representative
De Brooks at (717) 656-2300

Respectfully Submitted
Christine M. Ratcliff, B.S.
Senior Chemist, GC/MS

Lancaster Laboratories
2425 New Holland Pike
PO Box 12425
Lancaster, PA 17605-2425
717-656-2300 Fax: 717-656-2681

MEMBER ACIL

See reverse side for explanation of symbols and abbreviations.

Lancaster Laboratories
A division of Thermo Analytical Inc.

LLI Sample No. WW 2719667
Collected: 5/31/97 at 11:30 by CH

Submitted: 6/ 2/97 Reported: 6/11/97
Discard: 6/19/97

MOW-053197-C16 Grab Water Sample

Morgantown Ordnance - Project No. 70043

Account No: 07867
ICF Kaiser Engineers, Inc.
Gateway View Plaza
1600 W. Carson St.
Pittsburgh PA 15219

P.O. 70043
Rel.

CAT NO.	ANALYSIS NAME	AS RECEIVED RESULTS	LIMIT OF QUANTITATION	UNITS
Base Neutrals (cont)				

Questions? Contact your Client Services Representative
De Brooks at (717) 656-2300

Respectfully Submitted
Christine M. Ratcliff, B.S.
Senior Chemist, GC/MS

MEMBER ACIL
Lancaster Laboratories
2425 New Holland Pike
PO Box 12425
Lancaster, PA 17605-2425
717-656-2300 Fax: 717-656-2681

See reverse side for explanation of symbols and abbreviations.

Lancaster Laboratories
A division of Thermo Analytical Inc.

LLI Sample No. WW 2723906
Collected: 6/ 9/97 at 15:00 by DC

Submitted: 6/10/97 Reported: 6/12/97
Discard: 6/20/97

MOW-060997C-18 Grab Water Sample

Morgantown Ordinance - Project No. 70043 50000

Account No: 07867
ICF Kaiser Engineers, Inc.
Gateway View Plaza
1600 W. Carson St.
Pittsburgh PA 15219

P.O. 70043 50000
Rel.

CAT NO.	ANALYSIS NAME	AS RECEIVED RESULTS	LIMIT OF QUANTITATION	UNITS
7054	Iron TR	2.17	0.10	mg/l
0206	Total Suspended Solids	12.4	9.0	mg/l

1 COPY TO ICF Kaiser Engineers, Inc. ATTN: Mr. Doug Taylor

Questions? Contact your Client Services Representative
at (717) 656-2300
04:28:05 D 0001 2 130462 568503
320 0.00 00007217 ASR000

Respectfully Submitted
Ramona V. Layman
Manager, Metals/Leachates

MEMBER ACIL
Lancaster Laboratories
2425 New Holland Pike
PO Box 12425
Lancaster, PA 17605-2425
717-656-2300 Fax: 717-656-2681

See reverse side for explanation of symbols and abbreviations.

Analysis Report

Lancaster Laboratories
A division of Thermo Analytical Inc.

LLI Sample No. WW 2723907
Collected: 6/ 9/97 at 15:00 by DC

Submitted: 6/10/97 Reported: 6/12/97
Discard: 6/20/97

MOW-060997C-18 Filtered Grab Water Sample

Morgantown Ordinance - Project No. 70043 50000

Account No: 07867
ICF Kaiser Engineers, Inc.
Gateway View Plaza
1600 W. Carson St.
Pittsburgh PA 15219

P.O. 70043 50000
Rel.

CAT NO.	ANALYSIS NAME	AS RECEIVED RESULTS	LIMIT OF QUANTITATION	UNITS
7054	Iron TR	< 0.10	0.10	mg/l

This sample was filtered in the lab for dissolved metals.

1 COPY TO ICF Kaiser Engineers, Inc. ATTN: Mr. Doug Taylor

Questions? Contact your Client Services Representative
at (717) 656-2300
04:28:09 D 0001 2 130462 568503
320 15.00 00006349 ASR000

Respectfully Submitted
Ramona V. Layman
Manager, Metals/Leachates

MEMBER ACIL
Lancaster Laboratories
2425 New Holland Pike
PO Box 12425
Lancaster, PA 17605-2425
717-656-2300 Fax: 717-656-2681

See reverse side for explanation of symbols and abbreviations.

Lancaster Laboratories
A division of Thermo Analytical Inc.

LLI Sample No. G5 2722400
Collected: 6/ 5/97 at 10:00 by DPA

Submitted: 6/ 6/97 Reported: 6/12/97
Discard: 6/27/97

MOW-060597-CA-9 Grab Wipe Sample

Morgantown Ordnance - Project No. 70043

Account No: 07867
ICF Kaiser Engineers, Inc.
Gateway View Plaza
1600 W. Carson St.
Pittsburgh PA 15219

P.O. 70043
Rel.

CAT NO.	ANALYSIS NAME	AS RECEIVED RESULTS	LIMIT OF QUANTITATION	UNITS
7512	PCBs in Wipes/Air			See Page 2

1 COPY TO ICF Kaiser Engineers, Inc. ATTN: Mr. Doug Taylor

Questions? Contact your Client Services Representative
De Brooks at (717) 656-2300
04:19:02 D 0001 2 130462 568116
320 0.00 00023450 ASR000

Respectfully Submitted
Ramona V. Layman
Manager, Metals/Leachates

MEMBER ACIL
Lancaster Laboratories
2425 New Holland Pike
PO Box 12425
Lancaster, PA 17605-2425
717-656-2300 Fax: 717-656-2681

See reverse side for explanation of symbols and abbreviations.

Lancaster Laboratories
A division of Thermo Analytical Inc.

LLI Sample No. G5 2722400
Collected: 6/ 5/97 at 10:00 by DPA

Submitted: 6/ 6/97 Reported: 6/12/97
Discard: 6/27/97

MOW-060597-CA-9 Grab Wipe Sample

Morgantown Ordnance - Project No. 70043

Account No: 07867
ICF Kaiser Engineers, Inc.
Gateway View Plaza
1600 W. Carson St.
Pittsburgh PA 15219

P.O. 70043
Rel.

CAT NO.	ANALYSIS NAME	AS RECEIVED RESULTS	LIMIT OF QUANTITATION	UNITS
PCBs in Wipes/Air				
7514	PCB-1016	< 1.0	1.0	ug
7515	PCB-1221	< 1.0	1.0	ug
7516	PCB-1232	< 1.0	1.0	ug
7517	PCB-1242	< 1.0	1.0	ug
7518	PCB-1248	< 1.0	1.0	ug
7519	PCB-1254	2.7	1.0	ug
7520	PCB-1260	< 1.0	1.0	ug

Questions? Contact your Client Services Representative
De Brooks at (717) 656-2300

Respectfully Submitted
Jenifer E. Hess, B.S.
Group Leader Pesticides/PCBs

MEMBER ACIL
Lancaster Laboratories
2425 New Holland Pike
PO Box 12425
Lancaster, PA 17605-2425
717-656-2300 Fax: 717-656-2681

See reverse side for explanation of symbols and abbreviations.

Lancaster Laboratories
A division of Thermo Analytical Inc.

LLI Sample No. GS 2722401
Collected: 6/ 5/97 at 10:00 by DPA

Submitted: 6/ 6/97 Reported: 6/12/97
Discard: 6/27/97

MOW-060597-CA-10 Grab Wipe Sample

Morgantown Ordnance - Project No. 70043

Account No: 07867
ICF Kaiser Engineers, Inc.
Gateway View Plaza
1600 W. Carson St.
Pittsburgh PA 15219

P.O. 70043
Rel.

CAT NO.	ANALYSIS NAME	AS RECEIVED RESULTS	LIMIT OF QUANTITATION	UNITS
7512	PCBs in Wipes/Air			See Page 2

1 COPY TO ICF Kaiser Engineers, Inc. ATTN: Mr. Doug Taylor

Questions? Contact your Client Services Representative
De Brooks at (717) 656-2300
04:19:10 D 0001 2 130462 568116
320 0.00 00021250 ASR000

Respectfully Submitted
Ramona V. Layman
Manager, Metals/Leachates

MEMBER ACIL
Lancaster Laboratories
2425 New Holland Pike
PO Box 12425
Lancaster, PA 17605-2425
717-656-2300 Fax: 717-656-2681

See reverse side for explanation of symbols and abbreviations.

Lancaster Laboratories
A division of Thermo Analytical Inc.

LLI Sample No. G5 2722401
Collected: 6/ 5/97 at 10:00 by DPA

Submitted: 6/ 6/97 Reported: 6/12/97
Discard: 6/27/97

MOW-060597-CA-10 Grab Wipe Sample

Morgantown Ordnance - Project No. 70043

Account No: 07867
ICF Kaiser Engineers, Inc.
Gateway View Plaza
1600 W. Carson St.
Pittsburgh PA 15219

P.O. 70043
Rel.

CAT NO.	ANALYSIS NAME	AS RECEIVED RESULTS	LIMIT OF QUANTITATION	UNITS
PCBs in Wipes/Air				
7514	PCB-1016	< 10.	10.	ug
7515	PCB-1221	< 10.	10.	ug
7516	PCB-1232	< 10.	10.	ug
7517	PCB-1242	< 10.	10.	ug
7518	PCB-1248	< 10.	10.	ug
7519	PCB-1254	17.	10.	ug
7520	PCB-1260	< 10.	10.	ug

The values reported for the Aroclors represent the lowest quantitation limits obtainable. This is due to dilutions or interfering peaks from the presence of Aroclor 1254.

Questions? Contact your Client Services Representative
De Brooks at (717) 656-2300

Respectfully Submitted
Jenifer E. Hess, B.S.
Group Leader Pesticides/PCBs

MEMBER ACIL
Lancaster Laboratories
2425 New Holland Pike
PO Box 12425
Lancaster, PA 17605-2425
717-656-2300 Fax: 717-656-2681

See reverse side for explanation of symbols and abbreviations.

G

APPENDIX G

TEMPORARY NPDES DISCHARGE PERMIT AND DISCHARGE APPROVALS

Chuck Haefner

DIVISION OF ENVIRONMENTAL PROTECTION
1201 Greenbrier Street
Charleston, WV 25311-1088

CECIL H. UNDERWOOD
GOVERNOR

LAIDLEY ELI MCCOY, Ph.D.
DIRECTOR

February 27, 1997

Ms. Kathleen D. Conner-Hervol
Permitting Specialist
ICF Kaiser Engineers, Inc.
Gateway View Plaza
1600 West Carson Street
Pittsburgh, PA 15219-1031

Re: Treatment & Disposal of Wastewater generated From Superfund Site Clean-up @ Morgantown Ordnance Works (MOW)

Dear Ms. Conner-Hervol:

Based upon the review of information provided in your letter dated February 14, 1997, be advised that the agency approves your request for direct discharge of wastewater generated, during site clean-up activities at the Morgantown Ordnance Works (MOW), into the Monongahela River. This approval is subject to the following conditions.

1. Dirty wastewater shall be provided necessary treatment.

2. Wastewater shall be discharged approximately 3/4 mile downstream of public water supply intake of the City of Morgantown. Discharge rate shall not exceed 35,000 gallons per hour.

3. Discharge shall not cause any discoloration or plume into the river.

4. Before commencing the discharge from the tank, a representative grab sample shall be taken and shall be analyzed for the following pollutants/parameters: pH (6.0 s.u. - 9.0 s.u.), TSS (60 mg/l maximum), COD, TOC, total phenols (4AAP), oil & grease, total cyanide, fluoride, chlorides, total iron, total manganese, total lead, total copper, total zinc, total mercury, total aluminum, benzene, hexachlorobenzene, polynuclear aromatic hydrocarbons and PCBs. These analyses shall be carried out using analytical methods (having the lowest detection limits) specified under 40 CFR Part 136. These analyses shall be submitted to the agency for approval prior to the discharge.

5. Before commencing the discharge, the agency's Fairmont office shall be notified by calling @ 304-367-2724. Contact persons at the Fairmont office are: Mr. Minter Foster and Mr. Brad Swiger.

6. If there is any problem encountered, the discharge shall be terminated immediately and Mr. Foster or Mr. Swiger shall be notified.

7. Discharge of any sludge/sediment is prohibited.

8. The agency reserves its right to withdraw this approval, if any unforseen problem arises or any violation of the applicable regulations is observed during any inspection.

If you have any questions regarding this matter, please feel free to contact Mr. Naresh R. Shah of my staff @ 304-558-8855.

Sincerely,

OFFICE OF WATER RESOURCES

Barbara S. Taylor, Chief

cc: Mr. Brad Swiger, NW Dist.
Mr. Minter Foster, NW Dist.
Mr. Mike Stratton, OWM
Mr. Jerry L. Ray
Asst. Chief, OWR

ICF KAISER ENGINEERS

TELEPHONE MEMO

Call By Naresh Shah (NPDES Permitting (Industrial) + works for Barbara Taylor) of WVDEP Project Name/No.: MOW

Call To Kathy Conner-Hurd of ICF Kaiser Phone No.: (304) 558-8855 (fax) 5903

Subject: Discharge from Sumps, Pits + Trenches Date: 2/25/97 Time:

ICF KE	Naresh Shah Client	Telephone Conversation (Summary of Discussions, Decisions, Commitments, Dates, Times)
	N.S	Called regarding our 2/14/97 letter of discharge
		from the MOW. Did not have analysis, but if they
		are as clean as the letter indicates, WVDEP
		plans to let us discharge.
KKH		I will fax copy of analytical results ASAP
	N.S	Once he has had a chance to review (and if all
		is good), WVDEP will issue us a letter. This
		letter will require that we discharge downstream
		of the public water intake (± 2500') and we
		will be required to provide them with our
		analytical results prior to discharging. They may
		also require some monitoring parameters and
		limits.
KKH		Thank you

Distribution: C. Haefner
D. Taylor

PHONEMEMO.D/SBH

ICF KAISER
ICF KAISER ENGINEERS GROUP

ICF Kaiser Engineers, Inc.
Gateway View Plaza
1600 West Carson Street
Pittsburgh, PA 15219-1031
412/497-2000 Fax 412/497-2212

February 14, 1997

Ms. Barbara Taylor
Division Chief
WVDEP Office of Water Resource
1201 Greenbrier Street
Charleston, WV 25311

Subject: **Request for Temporary NPDES Permit for Water Disposal**
Morgantown Ordnance Works
Morgantown, West Virginia
ICF Kaiser Project No. 66473

Dear Ms. Taylor:

ICF Kaiser Engineers, Inc. (ICF Kaiser) is currently planning a Superfund Response Action to be performed on behalf of the Morgantown Technical Committee (the Committee). The cleanup is being done in partial fulfillment of the requirements of an Administrative Order on Consent for Removal Response Action (the Order) Docket No. III-96-68-DC for the Morgantown Ordnance Works (MOW) site in Morgantown, WV. The Order was negotiated between the U.S. Environmental Protection Agency (USEPA) and the former owners of the site. The site is currently operated as an industrial park by the Morgantown Industrial Park Association (MIPA).

ICF Kaiser has been hired by the Committee, which is made up of Olin Corporation, Tenneco Inc., and the U.S. Army Corps of Engineers; all of whom signed the Order. ICF Kaiser has assisted the Committee with the Remedial Investigation (RI) and remedial planning, and will serve as general contractor for the Response Action.

The Order requires that the Committee complete the following work to achieve acceptable levels of future risk at the site:

- Remove soils and sediments in excess of USEPA criteria; lead in excess of 1,000 ppm, PCBs in excess of 25 ppm, total carcinogenic polynuclear aromatic hydrocarbons (cPAHs) in excess of 78 ppm, and mercury in excess of 610 ppm.

- Remove non-hazardous sediments and water from abandoned sumps, pits, and trenches and backfill the sumps, pits and trenches to prevent future physical hazard.

The Committee submitted a Response Action Plan (RAP) dated February 4, 1997, that outlines how the Response Action will be completed. One key element of the RAP is the removal and disposal of large quantities of clean water that currently exist in the various sumps, pits, and trenches. As part of the RI and other planning work for the Response Action, the Committee collected composite water samples from all of

the sumps, pits and trenches. Based on these USEPA monitored sampling events, none of the water at the site needs to be removed because of exceedances of criteria. However, it must be removed to allow sediment removal and backfilling.

As you are aware from our conversation on January 28, 1997, ICF Kaiser estimates that 250,000 to 1.5 million gallons of water will need to be removed and disposed as part of the Response Action. ICF Kaiser and the Committee would like to dispose of this water by discharging it directly to the nearby Monongahela River through a temporary National Pollution Discharge Elimination System (NPDES) permit. As discussed below, we have thoroughly evaluated our options and believe that this method will provide the most efficient and economical means of discharge for the water that needs to be removed from the MOW.

The sumps, pits and trenches that contain the water we need to remove have all been sampled and analyzed for parameters that would typically be monitored for a discharge to a POTW. All of the water is of good quality and, we believe, would not require pretreatment for discharge. The sampling done to date is summarized in Table 1, the laboratory results are also attached.

We plan to remove the water from the sumps, pits, and trenches using a series of pumps. We will have the intakes positioned to avoid entrainment of sediments which may degrade the quality of the water. (In some cases, we may pump some of the water to separate storage vessels to avoid mixing clean and dirty water.) The pumped water will be stored in a 100,000-gallon tank located at the site. The tank will have a baffle system to allow removal of any suspended matter that does exist. The water in the tank will then be sampled and analyzed for the appropriate parameters; 24-hour laboratory turn-around will be specified. Once the results are available, and we have confirmed that the water meets the established criteria for discharge, we will transfer the water from the tanks to the discharge point as quickly as possible.

ICF Kaiser has investigated three other options for handling and disposing of the water, including using the on-site MIPA sewer lines, trucking water directly to the POTW (or local pump station), and direct discharge to the ground (please see Table 2). The MIPA pump station can only handle a maximum of 25 gallons per minute (gpm), and use of this pump station may be limited by MIPA to the late evening hours and on weekends. Because the pump station also serves the existing industries at MIPA, the flow rate may be further reduced if one of the industries increases their flow. The result is that on-site discharge would be unmanageably slow and undependable.

ICF Kaiser also investigated the option of trucking the water directly to the POTW or to the nearest major pumping station (located in Star City, 10 miles from the site). Trucking the water would be limited by the number of trucks we would load in a day, and the hours of operation (for unloading) at the POTW or pumping station. Trucking would require additional facilities to be available at the site to load the water and, possibly at the destination, to unload. The large number of trips, even if the low range of the possible volume is hauled, would be a logistical problem.

Another option is to discharge the water directly to ground. However, the large volume and high flow rate needed would likely result in ponding, runoff and/or erosion problems. This option is not considered feasible for a variety of logistical and regulatory reasons.

ICF KAISER

The option of discharging through a temporary NPDES permit has the significant advantage of allowing rapid disposal of the water. Time will be critical with regard to water management. Because we need to remove water from the sumps, pits, and trenches before we can remove the sediments on the bottom, we must have the capacity to deal with all of the water from a given location at one time. Further, because we will be executing this Response Action in April and May, we expect to have to deal with a significant amount of ongoing rainwater, stormwater drainage, and groundwater seepage. This will probably require daily pumping additional water, and in of severe weather, possible repumping of the original volume. As a result, we need to be able to discharge large volumes of water quickly and repump more water into the storage tanks. If we cannot, the schedule and effectiveness of the project will be significantly affected.

We have estimated that using a temporary NPDES permit, we could pipe 100,000 gallons of water (the volume in a single tank) to the Monongahela River in three hours (See Table 2). This would completely empty the holding tank by the end of the day after we filled it (including the time needed to wait for lab results). Because of flow limitations, trucking to the POTW would require at least 3.2 days to discharge the same amount of water and discharge to the on-site pump station would require at least 2.8 days. These intervals would severely delay progress and possibly result in continuous rework.

For these reasons, we believe that a temporary NPDES permit, which have been utilized for similar types of projects in other states, is the only viable way to manage the large volumes of clean water at the site. We would like to meet with you or the appropriate member of your staff to discuss ways to obtain such a permit. We recognize that there are additional details that would need to be worked out and we would be willing to discuss our plans with you more fully. If you would like to learn more about the planned work, you can also call Ms. Melissa Whittington, USEPA's Remedial Project Manager, at (215) 566-3235.

Please call me at (412) 497-2375 or Mr. Douglas Taylor, ICF Kaiser's Project Manager at (412) 497-2331 to discuss our proposal more fully.

Very truly yours,

Kathleen D. Conner-Hervol

Kathleen D. Conner-Hervol
Permitting Specialist

KDC/bam

cc: Melissa Whittington, USEPA
Steve Morrow, Olin Corporation
John Burns, Olin Corporation
Linda White, USACOE
Michael Crain, USACOE
Roger Towe, Tenneco Inc.
Michael Stratton, WVDEP

ICF KAISER

TABLE 1

SUMMARY OF WATER SAMPLES
COLLECTED FOR SUMPS, PITS, AND TRENCHES

MORGANTOWN ORDNANCE WORKS (MOW)

Sampling Location	Sample Number	Location Description	Parameters Tested[1]
Main Process Building Area	M-SW-456A	Crane Alley Composite	Full TCLP, Oil & Grease, COD and BOD
Quench Tower	C-SW-2A	Quench Tower Sump	Full TCLP, Oil & Grease, COD and BOD
Southern Sump	C-SW-5A	Interceptor Sump	Full TCLP, Oil & Grease, COD and BOD
Western Sumps	C-SW-6A	Composite of Several Small Sumps	Full TCLP, Oil & Grease, COD and BOD
Eastern Sumps	C-SW-7A	Utility Corridor Composite	Full TCLP, Oil & Grease, COD and BOD
Eastern Sumps	C-SW-8A	Composite of Several Sumps and Manholes	Full TCLP, Oil & Grease, COD and BOD

(1) Results Attached

ICF KAISER

TABLE 2

WATER DISCHARGE ALTERNATIVES

MORGANTOWN ORDNANCE WORKS

Method of Disposal	Description of Planned Action	Estimated Time to Discharge 250,000 Gallons	Estimated Time to Discharge 1,500,000 Gallons
Temporary NPDES	Run a 6 to 10 inch flexible pipe from the work area to the Monongahela River, approximately 1,000'. (Note proper outlet controls will be provided as necessary.)	8 hours	2 Days
On-site POTW	Run a pipe from the work area to the on-site pump station and pump 25 gpm . Monitor discharge to assure flow does not exceed MIPA limitation.	7 days*	42 days*
Truck to Off-site POTW	Truck the water from the work area in 2,100 gallon tanker trucks at a rate of 16 truckloads per day, and discharge to an the Star City POTW pump station.	8 days**	48 days**

* Best case, assuming 24 hr./day discharging.
** Based on four trucks working per day.

DIVISION OF ENVIRONMENTAL PROTECTION

CECIL H. UNDERWOOD
GOVERNOR

1201 Greenbrier Street
Charleston, WV 25311-1088

LAIDLEY ELI MCCOY, Ph.D.
DIRECTOR

April 10, 1997

Ms. Kathleen D. Conner-Hervol
Permitting Specialist
ICF Kaiser Engineers, Inc.
Gateway View Plaza
1600 West Carson Street
Pittsburgh, PA 15219-1031

Re: Discharge From Superfund Site Clean-up @ Morgantown Ordance Works (MOW)- New Discharge Loc.

Dear Ms. Conner-Hervol:

Based upon the review of the information provided in your letters dated March 11 and 26 of 1997, be advised that the agency has no objection to your proposed discharge location, which is approximately 800 feet downstream of public water supply intake of the City of Morgantown. The discharge shall be discontinued if any backflow conditions are encountered due to the very low flows (< 1000 cfs) in the river.

If you have any questions regarding this matter, please feel free to contact Mr. Naresh R. Shah of my staff @ 304-558-8855.

Sincerely,

OFFICE OF WATER RESOURCES

Barbara S. Taylor, Chief

cc: Mr. Brad Swiger, NW Dist.
Mr. Minter Foster, NW Dist.
Mr. Mike Stratton, OWM
Mr. Jerry L. Ray
Asst. Chief, OWR

ICF KAISER

ICF KAISER ENGINEERS GROUP

ICF Kaiser Engineers, Inc.
Gateway View Plaza
1600 West Carson Street
Pittsburgh, PA 15219-1031
412/497-2000 Fax 412/497-2212

March 26, 1997

Mr. Naresh Shah
West Virginia Division of Environmental Protection
1201 Greenbrier Street
Charleston, WV 25311-1088

Subject: **Discharge from Superfund Site**
Cleanup At Morgantown Ordnance Project
ICF Kaiser Project No. 66473

Dear Mr. Shah:

As follow-up to our March 24, 1997 discussion, ICF Kaiser Engineers, Inc. (ICF Kaiser) spoke with Cecil Rice of the Morgantown Lock and Dam to follow-up on the low river flow issue (the possible concern of the flow was < 1000 cfs) you raised in our telephone conversation. Mr. Rice informed us that during the later summer months low flow can exist, however, they are not aware of any backflow conditions developing due to the low flow. Based on this, we believe we will not be at any risk of flows < 1000 cfs during our April - June discharges. However, we will periodically recheck actual flows with Mr. Rice throughout our discharge period and will stop discharging if unacceptable conditions exist.

Also, as mentioned in our conversation, you had asked one of your inspectors to go out and verify our proposed outfall location. ICF Kaiser would be more than happy to meet with this inspector on site and review a proposed outfall location and discharge procedure. Please contact me or Chuck Haefner to arrange for the inspection; our personnel will be on-site daily beginning Monday, March 31.

Again, thank you for your assistance. Please do not hesitate to call should you have any comments or questions.

Sincerely,

Kathleen D. Conner-Hervol

Kathleen D. Conner-Hervol
Permitting Specialist

/ldk

cc: D. Taylor
C. Haefner

ICF KAISER ENGINEERS

TELEPHONE MEMO

Call By K. Conner-Heyel of ICF Kaiser Project Name/No.: MOW

Call To Naresh Shah of WVDEP Phone No.: (304) 558-6855

Subject: Discharge location Date: 3/13/97 Time:

ICF KE	Client	Telephone Conversation (Summary of Discussions, Decisions, Commitments, Dates, Times)
KDC-H		Call to verify location of the proposed discharge
		(±750') downstream of the intake is acceptable.
	NS	Think it's okay, but may want to check w/ COE
		regarding low flow (<1000 cfs) condition and
		any potential of backflow. May make a
		condition to discharge. Also would like to add
		total Ammonia to our parameters list.
KDC-H		We will follow-up w/ the COE and get back to you
		Will we be able to get this in writing once
		finalized. Also any input on pred. limits
	NS	Yes you'll get this in writing, also in regards to pred. limit we'd like to
		see a round of analysis first.
KDC-H		I'll check into that as well - thank you
		(Note: On 3/18/97 attempted to get back to
		Naresh regarding discharging into the ex. swale and
		low flow issue & I also plan to let him know that we'll have
		a round of analysis for him in about 2 wks) -
		(Naresh is out the entire wk of 3/17/97)

Distribution: D. Taylor
C. Haefner

PHONEMEMO.D/SBH

ICF KAISER ENGINEERS

TELEPHONE MEMO

Call By K. Conner-Novol of ICF Kaiser Project Name/No.: MOW

Call To Nareeh Shah of WV DEP Phone No.: (304) 558-8855

Subject: Discharge location (3,500' downstream of Intake) Date: 3/4/97 Time:

ICF KE	Client	Telephone Conversation (Summary of Discussions, Decisions, Commitments, Dates, Times)
KDC-H		Received letter from Barbara Taylor regarding conditions for us to discharge and we have not problems
		with the exception of having to be 3/4 of mile
		downstream from the Morgantown intake. As discussed,
		we verified that we are actually 4000' upstream
		of the intake. To be downstream (3/4 mile) we will
		have to run ± 6000' of pipe/hose. Also 4000' should give
		time for dilution.
	NS	Understand your problem, but WV DEP really wants
		to see you discharge downstream. GE has an outfall
		in that vicinity which DEP has been trying to
		get eliminated because of our concerns. Although
		you are across the river, 4000' give it time
		to mig-nate across to the intake area. Also note
		that your limits below the intake will be less
		stringent than if upstream. We strongly
		believe you should go downstream. We tried to
		help you out here and work with you...
KDC-H		We appreciate that and will look into this
		issue further. Thank you.

Distribution: D. Taylor
C. Haefner

PHONEMEMO.D/SBH