Message

From: DeLaquil, Mark [mdelaquil@bakerlaw.com]
Sent: 8/11/2018 3:36:46 PM
To: Schwab, Justin [/o=ExchangeLabs/ou=Exchange Administrative Group (FYDIBOHF23SPDLT)/cn=Recipients/cn=eed0f609c0944cc2bbdb05df3a10aadb-Schwab, Jus]
Subject: Re: Lunch

Sounds good. Central?

Sent from my iPhone

On Aug 11, 2018, at 10:08 AM, Schwab, Justin <Schwab.Justin@epa.gov> wrote:

> Right now Wednesday is looking (suspiciously)
> open from 11-1. If you can start a bit on the early side, let's block out 11:30-12:45?
>
> Sent from my iPhone
>
> On Aug 9, 2018, at 6:00 PM, DeLaquil, Mark <mdelaquil@bakerlaw.com> wrote:
>
>> Justin, I am sorry I missed this one on Monday. Busy week. How does next Tuesday or Wednesday work?
>>
>> **From:** Schwab, Justin <Schwab.Justin@epa.gov>
>> **Sent:** Monday, August 06, 2018 3:19 PM
>> **To:** DeLaquil, Mark <mdelaquil@bakerlaw.com>
>> **Subject:** Re: Lunch
>>
>> I could probably do lunch this Friday, maybe an early lunch Wednesday....
>>
>> Sent from my iPhone
>>
>> On Aug 1, 2018, at 10:42 AM, DeLaquil, Mark <mdelaquil@bakerlaw.com> wrote:
>>
>>> Just circling back on lunch. What does your calendar look like these days?
>>>
>>> **From:** DeLaquil, Mark
>>> **Sent:** Monday, July 23, 2018 5:46 PM
>>> **To:** 'Schwab, Justin' <Schwab.Justin@epa.gov>
>>> **Subject:** RE: Lunch
>>>
>>> Let's push to the week of 8/6. Does Wednesday 8/8 work?
>>>
>>> **From:** Schwab, Justin <Schwab.Justin@epa.gov>
>>> **Sent:** Monday, July 23, 2018 5:44 PM
>>> **To:** DeLaquil, Mark <mdelaquil@bakerlaw.com>
>>> **Subject:** Re: Lunch
>>>
>>> I'll be out starting Thursday and might not be back until Monday 8/6. I might be able to do lunch tomorrow or Wednesday but it'd have to be a

short one and there's a significant chance the rush to clear the decks before I leave will mean i have to cancel. If you're okay with that tentativeness we can try, or we can schedule for when I'm back.

Sent from my iPhone

On Jul 23, 2018, at 3:29 PM, DeLaquil, Mark <mdelaquil@bakerlaw.com> wrote:

> What does your calendar look like for lunch this week or next? I am free most days except this Thursday (7/26), next Monday (7/30) and next Friday (8/3)?
>
> ---
>
> **From:** Schwab, Justin <Schwab.Justin@epa.gov>
> **Sent:** Friday, March 23, 2018 10:07 AM
> **To:** DeLaquil, Mark <mdelaquil@bakerlaw.com>
> **Subject:** RE: Lunch
>
> Confirmed. See you then.
>
> ---
>
> **From:** DeLaquil, Mark [mailto:mdelaquil@bakerlaw.com]
> **Sent:** Friday, March 23, 2018 10:06 AM
> **To:** Schwab, Justin <Schwab.Justin@epa.gov>
> **Subject:** RE: Lunch
>
> Confirming lunch today at Central at noon. Looking forward to it.
>
> ---
>
> **From:** DeLaquil, Mark
> **Sent:** Wednesday, March 14, 2018 9:43 AM
> **To:** 'Schwab, Justin' <Schwab.Justin@epa.gov>
> **Subject:** RE: Lunch
>
> Friday the 23rd sounds good. Could you give me a quick call some time this week when you get a chance in the meantime?
>
> ---
>
> **From:** Schwab, Justin [mailto:Schwab.Justin@epa.gov]
> **Sent:** Wednesday, March 14, 2018 6:22 AM
> **To:** DeLaquil, Mark <mdelaquil@bakerlaw.com>
> **Subject:** Re: Lunch
>
> Mark,
>
> It's good to hear from you. We could try next Friday if that works for you?
>
> Sent from my iPhone
>
> On Mar 13, 2018, at 2:48 PM, DeLaquil, Mark <mdelaquil@bakerlaw.com> wrote:

Dear Justin,

Hope all is well. Long time no see. Very busy with trials since October. What does your calendar look like for lunch over the next few weeks?

Best regards,

Mark

Mark DeLaquil
Partner

<image001.jpg>
Washington Square
1050 Connecticut Ave, N.W. | Suite 1100
Washington, DC 20036-5304
T +1.202.861.1527

mdelaquil@bakerlaw.com
bakerlaw.com
<image003.jpg><image005.jpg>

This email is intended only for the use of the party to which it is
addressed and may contain information that is privileged,
confidential, or protected by law. If you are not the intended
recipient you are hereby notified that any dissemination, copying
or distribution of this email or its contents is strictly prohibited.
If you have received this message in error, please notify us immediately
by replying to the message and deleting it from your computer.

Any tax advice in this email is for information purposes only. The content
of this email is limited to the matters specifically addressed herein
and may not contain a full description of all relevant facts or a
complete analysis of all relevant issues or authorities.

Internal communications are not assured to be secure or clear of
inaccuracies as information could be intercepted, corrupted, lost,
destroyed, arrive late or incomplete, or contain viruses. Therefore,
we do not accept responsibility for any errors or omissions that are
present in this email, or any attachment, that have arisen as a result
of e-mail transmission.

Message

From: Jack Gerard [registrar@api.org]
Sent: 12/20/2017 3:02:18 PM
To: Schwab, Justin [/o=ExchangeLabs/ou=Exchange Administrative Group (FYDIBOHF23SPDLT)/cn=Recipients/cn=eed0f609c0944cc2bbdb05df3a10aadb-Schwab, Jus]
Subject: Last Chance to Register for The State of American Energy 2018

STATE OF AMERICAN ENERGY 2018

HOW NATURAL GAS & OIL ARE POWERING PAST IMPOSSIBLE

Today is the **last chance to register** for API's 2018 State of American Energy luncheon on **Tuesday, January 9, 2018** from 11:30 A.M.-1:00 P.M. Please RSVP at Registrar@api.org if you have any questions.

Sincerely,

JACK N. GERARD,
President and CEO, API

This event has been designed to comply with the gifts and ethics rules of the U.S. Senate and House of Representatives as a "widely attended event." Employees of the executive branch may wish to consult their Designated Agency Ethics Official about any rules that may apply to their attendance at this event.

powered by cvent

Message

From: Jack Gerard [registrar@api.org]
Sent: 1/9/2018 5:32:23 PM
To: Schwab, Justin [/o=ExchangeLabs/ou=Exchange Administrative Group (FYDIBOHF23SPDLT)/cn=Recipients/cn=eed0f609c0944cc2bbdb05df3a10aadb-Schwab, Jus]
Subject: Watch Live: API's State of American Energy 2018

STATE OF AMERICAN ENERGY 2018 | HOW NATURAL GAS & OIL ARE POWERING PAST IMPOSSIBLE

Watch Live: The State of American Energy

If you were unable to attend API's State of American Energy 2018 event today, you don't have to miss it! Simply watch the event live.

We encourage you to join the conversation on Twitter using #SOAE2018.

This event has been designed to comply with the gifts and ethics rules of the U.S. Senate and House of Representatives as a "widely attended event." Employees of the executive branch may wish to consult their Designated Agency Ethics Official about any rules that may apply to their attendance at this event.

powered by cvent

Message

From: Jack Gerard [registrar@api.org]
Sent: 12/11/2017 4:02:11 PM
To: Schwab, Justin [/o=ExchangeLabs/ou=Exchange Administrative Group (FYDIBOHF23SPDLT)/cn=Recipients/cn=eed0f609c0944cc2bbdb05df3a10aadb-Schwab, Jus]
Subject: You're Invited to API's State of American Energy 2018

STATE OF AMERICAN ENERGY 2018 | HOW NATURAL GAS & OIL ARE POWERING PAST IMPOSSIBLE

Please join us for the American Petroleum Institute's 2018 State of American Energy luncheon. As the midterm election year begins we will remind lawmakers, policymakers and the public that America's domestic energy abundance is helping to meet the ever-growing demand for energy, but also how those same resources are the building blocks for many of the products that make our modern society safer, advance the medical arts, and spur creativity and scientific innovation through our Power Past Impossible advertising campaign.

From energy that keeps our homes, offices, and schools lit and warm, to the modern fuels that not only power our vehicles but also help to improve our environment, to the modern pharmaceuticals that improve the health and well-being of millions. Power Past Impossible makes the connection between natural gas, oil and their derived products and their fundamental role in our society, which is essential to positively advance the national energy policy discussion.

Sincerely,

RSVP

BY DECEMBER 22ND

This invitation is non-transferable.

When

TUESDAY, JANUARY 9, 2018
11:30 A.M.-1:00 P.M.

Where

Ronald Reagan Building and
International Trade Center
Atrium Ballroom
1300 Pennsylvania Avenue, NW
Washington, DC 20004

Please use entrance on 14th Street

JACK N. GERARD
President and CEO, API

This event has been designed to comply with the gifts and ethics rules of the U.S. Senate and House of Representatives as a "widely attended event." Employees of the executive branch may wish to consult their Designated Agency Ethics Official about any rules that may apply to their attendance at this event.

powered by
cvent

Message

From: DeLaquil, Mark [mdelaquil@bakerlaw.com]
Sent: 3/13/2018 6:31:32 PM
To: Schwab, Justin [/o=ExchangeLabs/ou=Exchange Administrative Group (FYDIBOHF23SPDLT)/cn=Recipients/cn=eed0f609c0944cc2bbdb05df3a10aadb-Schwab, Jus]
Subject: Lunch

Dear Justin,

Hope all is well. Long time no see. Very busy with trials since October. What does your calendar look like for lunch over the next few weeks?

Best regards,

Mark

Mark DeLaquil
Partner

BakerHostetler
Washington Square
1050 Connecticut Ave, N.W. | Suite 1100
Washington, DC 20036-5304
T +1.202.861.1527

mdelaquil@bakerlaw.com
bakerlaw.com

This email is intended only for the use of the party to which it is addressed and may contain information that is privileged, confidential, or protected by law. If you are not the intended recipient you are hereby notified that any dissemination, copying or distribution of this email or its contents is strictly prohibited. If you have received this message in error, please notify us immediately by replying to the message and deleting it from your computer.

Any tax advice in this email is for information purposes only. The content of this email is limited to the matters specifically addressed herein and may not contain a full description of all relevant facts or a complete analyses of all relevant issues or authorities.

Internet communications are not assured to be secure or clear of inaccuracies as information could be intercepted, corrupted, lost, destroyed, arrive late or incomplete, or contain viruses. Therefore, we do not accept responsibility for any errors or omissions that are present in this email, or any attachment, that have arisen as a result of e-mail transmission.

Message

From: Jack Gerard [registrar@api.org]
Sent: 12/5/2017 3:32:15 PM
To: Schwab, Justin [/o=ExchangeLabs/ou=Exchange Administrative Group (FYDIBOHF23SPDLT)/cn=Recipients/cn=eed0f609c0944cc2bbdb05df3a10aadb-Schwab, Jus]
Subject: You're Invited to API's State of American Energy 2018

STATE OF AMERICAN ENERGY 2018 | HOW NATURAL GAS & OIL ARE POWERING PAST IMPOSSIBLE

Please join us for the American Petroleum Institute's 2018 State of American Energy luncheon. As the midterm election year begins we will remind lawmakers, policymakers and the public that America's domestic energy abundance is helping to meet the ever-growing demand for energy, but also how those same resources are the building blocks for many of the products that make our modern society safer, advance the medical arts, and spur creativity and scientific innovation through our Power Past Impossible advertising campaign.

From energy that keeps our homes, offices, and schools lit and warm, to the modern fuels that not only power our vehicles but also help to improve our environment, to the modern pharmaceuticals that improve the health and well-being of millions. Power Past Impossible makes the connection between natural gas, oil and their derived products and their fundamental role in our society, which is essential to positively advance the national energy policy discussion.

Sincerely,

RSVP

BY DECEMBER 22ND

This invitation is non-transferable.

When

TUESDAY, JANUARY 9, 2018
11:30 A.M.-1:00 P.M.

Where

Ronald Reagan Building and
International Trade Center
Atrium Ballroom
1300 Pennsylvania Avenue, NW
Washington, DC 20004

Please use entrance on 14th Street

JACK N. GERARD
President and CEO, API

This event has been designed to comply with the gifts and ethics rules of the U.S. Senate and House of Representatives as a "widely attended event." Employees of the executive branch may wish to consult their Designated Agency Ethics Official about any rules that may apply to their attendance at this event.

powered by
cvent

Message

From: Jack Gerard [registrar@api.org]
Sent: 12/14/2017 4:02:21 PM
To: Schwab, Justin [/o=ExchangeLabs/ou=Exchange Administrative Group (FYDIBOHF23SPDLT)/cn=Recipients/cn=eed0f609c0944cc2bbdb05df3a10aadb-Schwab, Jus]
Subject: You're Invited to API's State of American Energy 2018

STATE OF AMERICAN ENERGY 2018 | HOW NATURAL GAS & OIL ARE POWERING PAST IMPOSSIBLE

Please join us for the American Petroleum Institute's 2018 State of American Energy luncheon. As the midterm election year begins we will remind lawmakers, policymakers and the public that America's domestic energy abundance is helping to meet the ever-growing demand for energy, but also how those same resources are the building blocks for many of the products that make our modern society safer, advance the medical arts, and spur creativity and scientific innovation through our Power Past Impossible advertising campaign.

From energy that keeps our homes, offices, and schools lit and warm, to the modern fuels that not only power our vehicles but also help to improve our environment, to the modern pharmaceuticals that improve the health and well-being of millions. Power Past Impossible makes the connection between natural gas, oil and their derived products and their fundamental role in our society, which is essential to positively advance the national energy policy discussion.

Sincerely,

RSVP

BY DECEMBER 22ND

This invitation is non-transferable.

When

TUESDAY, JANUARY 9, 2018
11:30 A.M.-1:00 P.M.

Where

Ronald Reagan Building and
International Trade Center
Atrium Ballroom
1300 Pennsylvania Avenue, NW
Washington, DC 20004

Please use entrance on 14th Street

JACK N. GERARD
President and CEO, API

This event has been designed to comply with the gifts and ethics rules of the U.S. Senate and House of Representatives as a "widely attended event." Employees of the executive branch may wish to consult their Designated Agency Ethics Official about any rules that may apply to their attendance at this event.

powered by
cvent

Message

From: Ponce, Jeanette [jponce@bakerlaw.com]
Sent: 4/4/2018 2:54:40 PM
Subject: PLS RESPOND: Third Annual NY Alumni Cocktail Party | April 11
Attachments: NY Litigation Alumni Cocktail Party_p9.pdf

We would love to see you! Be sure to RSVP via the link below.

Third Annual NY Alumni Cocktail Party | April 11 If you cannot view this email correctly, please view it online

To ensure future delivery, please add alumni@e.bakerlaw.com to your safe senders list.

BakerHostetler

You are cordially invited to the
Third Annual NY Alumni Cocktail Party

Wednesday, April 11, 2018
6:00 to 8:30 p.m.

Shinbashi Restaurant

7 East 48th Street
(between Fifth and Madison Avenues)
New York, NY 10017

Cocktails and light hors d'oeuvres

RSVP by March 31

For questions, please contact Jeanette Ponce at jponce@bakerlaw.com.

To update your personal and/or business contact information on the BakerHostetler alumni site, please visit bakeralum.com.

VISIT US
www.bakeralum.com

FOLLOW US

EMAIL US
alumni@bakerlaw.com

BakerHostetler

This email was sent by: BakerHostetler, Key Tower, 127 Public Square, Suite 2000, Cleveland, OH 44114-1214 USA

If you no longer wish to receive these emails you may unsubscribe at any time.

© 2018 BakerHostetler®

This email is intended only for the use of the party to which it is addressed and may contain information that is privileged, confidential, or protected by law. If you are not the intended recipient you are hereby notified that any dissemination, copying or distribution of this email or its contents is strictly prohibited. If you have received this message in error, please notify us immediately by replying to the message and deleting it from your computer.

Any tax advice in this email is for information purposes only. The content of this email is limited to the matters specifically addressed herein and may not contain a full description of all relevant facts or a complete analysis of all relevant issues or authorities.

Internet communications are not assured to be secure or clear of inaccuracies as information could be intercepted, corrupted, lost, destroyed, arrive late or incomplete, or contain viruses. Therefore, we do not accept responsibility for any errors or omissions that are present in this email, or any attachment, that have arisen as a result of e-mail transmission.

BakerHostetler

You are cordially invited to the
Third Annual NY Alumni Cocktail Party

Wednesday, April 11, 2018
6:00 to 8:30 p.m.

Shinbashi Restaurant
7 East 48th Street
(between Fifth and Madison Avenues)
New York, NY 10017

Cocktails and light hors d'oeuvres

RSVP by March 31 at
http://www.rsvpbakerlaw.com/Register.aspx?EventID=574

For questions, please contact
Jeanette Ponce at jponce@bakerlaw.com.

To update your personal and/or business contact information on the BakerHostetler alumni site, please visit bakeralum.com.

Message

From: Brown, Samuel L. [SlBrown@hunton.com]
Sent: 12/2/2017 8:02:26 AM
To: Minoli, Kevin [/o=ExchangeLabs/ou=Exchange Administrative Group (FYDIBOHF23SPDLT)/cn=Recipients/cn=c9c0070d651a4625ac20258369f9b050-KMINOLI]
CC: Boer, J. Tom [JTBoer@hunton.com]; Mikolop, Todd S. [TMikolop@hunton.com]; Schwab, Justin [/o=ExchangeLabs/ou=Exchange Administrative Group (FYDIBOHF23SPDLT)/cn=Recipients/cn=eed0f609c0944cc2bbdb05df3a10aadb-Schwab, Jus]
Subject: Thank You!

Hi Kevin,

I just want to thank you again for participating in our *Insights into Environmental Law & Policy: A Conversation with Key Regulators* event on Thursday. We received great feedback from the participants and your contribution was greatly appreciated.

Also, Justin, great to meet you and thanks for attending.

Thanks! – Sam

HUNTON & WILLIAMS

Samuel Brown
Senior Attorney
slbrown@hunton.com
p 415.975.3714
f 415.975.3775
bio | vCard

Hunton & Williams LLP
50 California Street
Suite 1700
San Francisco, CA 94105
hunton.com

Message

From: Jack Gerard [registrar@api.org]
Sent: 11/29/2017 3:32:10 PM
To: Schwab, Justin [/o=ExchangeLabs/ou=Exchange Administrative Group (FYDIBOHF23SPDLT)/cn=Recipients/cn=eed0f609c0944cc2bbdb05df3a10aadb-Schwab, Jus]
Subject: You're Invited to API's State of American Energy 2018

STATE OF AMERICAN ENERGY 2018 | HOW NATURAL GAS & OIL ARE POWERING PAST IMPOSSIBLE

Please join us for the American Petroleum Institute's 2018 State of American Energy luncheon. As the midterm election year begins we will remind lawmakers, policymakers and the public that America's domestic energy abundance is helping to meet the ever-growing demand for energy, but also how those same resources are the building blocks for many of the products that make our modern society safer, advance the medical arts, and spur creativity and scientific innovation through our Power Past Impossible advertising campaign.

From energy that keeps our homes, offices, and schools lit and warm, to the modern fuels that not only power our vehicles but also help to improve our environment, to the modern pharmaceuticals that improve the health and well-being of millions. Power Past Impossible makes the connection between natural gas, oil and their derived products and their fundamental role in our society, which is essential to positively advance the national energy policy discussion.

Sincerely,

RSVP

BY DECEMBER 22ND

This invitation is non-transferable.

When

TUESDAY, JANUARY 9, 2018
11:30 A.M.-1:00 P.M.

Where

Ronald Reagan Building and
International Trade Center
Atrium Ballroom
1300 Pennsylvania Avenue, NW
Washington, DC 20004

Please use entrance on 14th Street

JACK N. GERARD
President and CEO, API

This event has been designed to comply with the gifts and ethics rules of the U.S. Senate and House of Representatives as a "widely attended event." Employees of the executive branch may wish to consult their Designated Agency Ethics Official about any rules that may apply to their attendance at this event.

powered by
cvent

Message

From: DeLaquil, Mark [mdelaquil@bakerlaw.com]
Sent: 8/14/2017 7:38:26 PM
To: Schwab, Justin [/o=ExchangeLabs/ou=Exchange Administrative Group (FYDIBOHF23SPDLT)/cn=Recipients/cn=eed0f609c0944cc2bbdb05df3a10aadb-Schwab, Jus]
Subject: SNAP Decision

Flag: Flag for follow up

Dear Justin,

I hope all is well. We are working with one of the parties in the SNAP litigation and I was hoping to touch base with you briefly this week. Please let me know if you have any time to discuss.

Best regards,

Mark

PS: David sends his regards and apologizes for not being able to make dinner yet, as he has been out of the country for much of the last few months.

Mark DeLaquil
Partner

BakerHostetler
Washington Square
1050 Connecticut Ave, N.W. | Suite 1100
Washington, DC 20036-5304
T +1.202.861.1527

mdelaquil@bakerlaw.com
bakerlaw.com

This email is intended only for the use of the party to which it is addressed and may contain information that is privileged, confidential, or protected by law. If you are not the intended recipient you are hereby notified that any dissemination, copying or distribution of this email or its contents is strictly prohibited. If you have received this message in error, please notify us immediately by replying to the message and deleting it from your computer.

Any tax advice in this email is for information purposes only. The content of this email is limited to the matters specifically addressed herein and may not contain a full description of all relevant facts or a complete analysis of all relevant issues or authorities.

Internet communications are not assured to be secure or clear of inaccuracies as information could be intercepted, corrupted, lost, destroyed, arrive late or incomplete, or contain viruses. Therefore, we do not accept responsibility for any errors or omissions that are present in this email, or any attachment, that have arisen as a result of e-mail transmission.

Message

From: Broome, Shannon S. [SBroome@hunton.com]
Sent: 7/17/2017 2:26:58 AM
To: Schwab, Justin [/o=ExchangeLabs/ou=Exchange Administrative Group (FYDIBOHF23SPDLT)/cn=Recipients/cn=eed0f609c0944cc2bbdb05df3a10aadb-Schwab, Jus]
CC: Knauss, Chuck [CKnauss@hunton.com]
Subject: Available times

Justin – thanks for the call today. We can do 11, noon, or 3 eastern tomorrow. Do any of these times work for you?

Best regards,

HUNTON & WILLIAMS

Shannon S. Broome
Partner
sbroome@hunton.com
415.975.3718 (SF)
202.955.1912 (DC)
Ex. 6
Hunton & Williams LLP
50 California Street
17th Floor
San Francisco, CA 94105
hunton.com

Check out Hunton's new Environmental and Energy Law Blog! https://www.huntonnickelreportblog.com/
This communication is confidential and is intended to be privileged pursuant to applicable law. If the reader of this message is not the intended recipient, please advise by return email immediately and then delete this message and all copies and backups thereof.

Message

From: Albores, Richard [/O=EXCHANGELABS/OU=EXCHANGE ADMINISTRATIVE GROUP (FYDIBOHF23SPDLT)/CN=RECIPIENTS/CN=CE14F8709A5E4AC383AF9D0B767FD8AF-RALBOR02]
Sent: 9/27/2017 6:06:18 PM
To: rlattimore@croplifeamerica.org; syager@beef.org; mhart@beef.org; tward@nahb.org; brooks.smith@troutmansanders.com; akoethe@aar.org; brownl@api.org; wagner@api.org; lindens@api.org; Richard Moskowitz [/o=ExchangeLabs/ou=Exchange Administrative Group (FYDIBOHF23SPDLT)/cn=Recipients/cn=user2443f1e7]; msonnesyn@brt.org; rgoss@itic.org; JRizzo@nahb.org; Jan_Poling@afandpa.org; Michael Formica [/o=ExchangeLabs/ou=Exchange Administrative Group (FYDIBOHF23SPDLT)/cn=Recipients/cn=user6d63216b]; ellens@fb.org; ksweeney@nma.org; gcrandall@umwa.org; dell_perelman@americanchemistry.com
CC: OGC HQ ADDs [/o=ExchangeLabs/ou=Exchange Administrative Group (FYDIBOHF23SPDLT)/cn=Recipients/cn=3a4f127ecf974bfdb384984d1b28e330-OGC HQ Associates]; OGC RCs Only [/o=ExchangeLabs/ou=Exchange Administrative Group (FYDIBOHF23SPDLT)/cn=Recipients/cn=50b8e2870aec40da80921a62cbf34c23-OGC RCs Onl]; OGC Immediate Office MGMT [/o=ExchangeLabs/ou=Exchange Administrative Group (FYDIBOHF23SPDLT)/cn=Recipients/cn=5ce597c53b604d6496992ae8a3bb3e45-OGC FTTA OGC]
Subject: ATTACHED: Attendee Lists Fall Industry Association and EPA OGC Dialogue Meeting
Attachments: OGC Fall Industry Open House Sign-In2017-09-27.pdf

Thank you all for attending today's meeting. I hope you found it informative and interesting. I have attached the sign-in sheets for those who were around the table today (I think we missed a couple attendees). On the phone were Regional Counsels from R1/R5/R6, and reps from the Business Round Table, and another I didn't catch.

Perhaps at our next meeting we can delve further into the APA "no action" issue that was raised. Please send me any follow up thoughts/inquiries, and I will route them as appropriate.

R

~~~~~

RICHARD L. ALBORES
Associate Deputy General Counsel * Office of General Counsel * U.S. EPA * 1200 Pennsylvania Avenue, NW * MC2310A * Washington, DC 20460 * email: albores.richard@epa.gov * phone: 202.564.7102 * mobile: Ex. 6

-----Original Appointment-----
From: Veney, Carla **On Behalf Of** Minoli, Kevin
Sent: Monday, August 28, 2017 11:56 AM
To: Minoli, Kevin; Fotouhi, David; Baptist, Erik; Schwab, Justin; Albores, Richard; rlattimore@croplifeamerica.org; syager@beef.org; mhart@beef.org; tward@nahb.org; brooks.smith@troutmansanders.com; akoethe@aar.org; brownl@api.org; wagner@api.org; lindens@api.org; rmoskowitz@afpm.org; msonnesyn@brt.org; OGC HQ ADDs; OGC IT Team; OGC RCs Only; EPAVTC; rgoss@itic.org; JRizzo@nahb.org; Jan_Poling@afandpa.org; formicam@nppc.org; ellens@fb.org; ksweeney@nma.org; gcrandall@umwa.org; dell_perelman@americanchemistry.com
Cc: Saleem, Nishtar; Payne, James; Briskin, Jeanne; Siciliano, CarolAnn; Smith, Candace; Srinivasan, Gautam; Dierker, Carl; Coe, Mary; Lattimore, Kraig; Koslow, Karin; Dolph, Becky; Fugh, Justina; Michaud, John; Wilkes, Mary; Rhines, Dale; Redden, Kenneth; Nelson, Leverett; Quast, Sylvia; Haskins, Antonio; Lewis, Jen; Logan, Paul; Schmidt, Lorie; Mclean, Kevin; Neugeboren, Steven; Blake, Wendy; Bigioni, Neil; Nunn, Shirlita
Subject: Agenda attached - Fall Industry Association and EPA OGC Dialogue Meeting (Call in number: Ex. 6 Code: Ex. 6
When: Wednesday, September 27, 2017 12:00 PM-1:00 PM (UTC-05:00) Eastern Time (US & Canada).
Where: EPA Headquarters, 1200 Pennsylvania Ave. NW (William Jefferson Clinton Building), 4th floor, Room 4045
~~~~~

External guests, please enter via our North side entrance. Once you have cleared security, someone will come down to escort you to the meeting location. Any logistical questions, please contact 202-564-8040.

ATTENDEE SIGN IN FOR Sept. 27, 2017 INDUSTRY-EPA OPEN HOUSE

NAME	ORGANIZATION	PHONE
Tom Ward	Nat'l Assoc. of Home Bldrs	266-8230
Wendy Blake	EPA, OGC, General Law Office	564-1821
Carol Ann Siciliano	EPA / OGC / Cross-Cutting	564-5489
Steve Neugebauer	EPA OGC Water	564-5488
KEN REDDEN	EPA OGC CRFLO	564-4707
KARIN KOSLOW	EPA / OGC / Cross-Cutting	564-0171
Jeanne Briskin	EPA / OGC / ADRLO Director	564-4583
Rich Moskowitz	AFPM	202 552-8474
Scott Yager	National Cattlemen	202 347 0228
Mary-Thomas Hart	National Cattlemen	202 879 9121
KEVIN MINOLI	EPA OGC	202 564 8011
Erik Baptist	EPA OGC	202 564 8064
Justin Schwab	EPA OGC	202-564-3135
DAVID FOTOUHI	EPA OGC	202-564-1976
RICH ALBORES	EPA OGC	202-564-7102
Michael Fonce	NPPC	202 347-3600

ATTENDEE SIGN IN FOR Sept. 27, 2017 INDUSTRY-EPA OPEN HOUSE

NAME	ORGANIZATION	PHONE
Lilian Dorka	ECRCO-OGC	202 564-9649
Jen Lewis	OGC-SWERLO	564-2097
John Michaud	OGC-SWERLO	564-5519
Kevin McLean	OGC - PTSLC	564-5564
Gautam Srinivasan	OGC - ARLO	564-5647
Katie Sweeney	National Mining Ass'n	202/463-2627
Alice Koetke	AAR	202 639-2509
Jim Rizzo	National Assn. of Home Builders	202-266-8305
Rick Goss	I.T. Industry Council	202-626-5724
Rachel Lattimore	CropLife America	202-872-3895
Stacy Linden	American Petroleum Inst.	202-682-8229
John Wagner	API	202/682-8529

Message

From: Michael Formica [formicam@nppc.org]
Sent: 9/27/2017 4:04:08 PM
To: Minoli, Kevin [/o=ExchangeLabs/ou=Exchange Administrative Group (FYDIBOHF23SPDLT)/cn=Recipients/cn=c9c0070d651a4625ac20258369f9b050-KMINOLI]
CC: Fotouhi, David [/o=ExchangeLabs/ou=Exchange Administrative Group (FYDIBOHF23SPDLT)/cn=Recipients/cn=febaf0d56aab43f8a9174b18218c1182-Fotouhi, Da]; Baptist, Erik [/o=ExchangeLabs/ou=Exchange Administrative Group (FYDIBOHF23SPDLT)/cn=Recipients/cn=10fc1b085ee14c6cb61db378356a1eb9-Baptist, Er]; Schwab, Justin [/o=ExchangeLabs/ou=Exchange Administrative Group (FYDIBOHF23SPDLT)/cn=Recipients/cn=eed0f609c0944cc2bbdb05df3a10aadb-Schwab, Jus]; Albores, Richard [/o=ExchangeLabs/ou=Exchange Administrative Group (FYDIBOHF23SPDLT)/cn=Recipients/cn=ce14f8709a5e4ac383af9d0b767fd8af-Ralbor02]; rlattimore@croplifeamerica.org; syager@beef.org; mhart@beef.org; tward@nahb.org; brooks.smith@troutmansanders.com; akoethe@aar.org; brownl@api.org; wagner@api.org; lindens@api.org; Richard Moskowitz [/o=ExchangeLabs/ou=Exchange Administrative Group (FYDIBOHF23SPDLT)/cn=Recipients/cn=user2443f1e7]; msonnesyn@brt.org; OGC HQ ADDs [/o=ExchangeLabs/ou=Exchange Administrative Group (FYDIBOHF23SPDLT)/cn=Recipients/cn=3a4f127ecf974bfdb384984d1b28e330-OGC HQ Associates]; OGC IT Team [/o=ExchangeLabs/ou=Exchange Administrative Group (FYDIBOHF23SPDLT)/cn=Recipients/cn=8b667795ba3e4716864d3646feb49f0c-OGC IT Team]; OGC RCs Only [/o=ExchangeLabs/ou=Exchange Administrative Group (FYDIBOHF23SPDLT)/cn=Recipients/cn=50b8e2870aec40da80921a62cbf34c23-OGC RCs Onl]; EPAVTC [/o=ExchangeLabs/ou=Exchange Administrative Group (FYDIBOHF23SPDLT)/cn=Recipients/cn=328731b6a4a6406488e6d3856817ccf5-EPAVTC]; rgoss@itic.org; JRizzo@nahb.org; Jan_Poling@afandpa.org; ellens@fb.org; ksweeney@nma.org; gcrandall@umwa.org; dell_perelman@americanchemistry.com; Saleem, Nishtar [/o=ExchangeLabs/ou=Exchange Administrative Group (FYDIBOHF23SPDLT)/cn=Recipients/cn=cfd0a9ade51f4627ab8ffc2c0899083f-Nishtar Saleem]; Payne, James [/o=ExchangeLabs/ou=Exchange Administrative Group (FYDIBOHF23SPDLT)/cn=Recipients/cn=61b3204a683041079512b122c580a569-Payne, Jame]; Briskin, Jeanne [/o=ExchangeLabs/ou=Exchange Administrative Group (FYDIBOHF23SPDLT)/cn=Recipients/cn=d4f44944371d40819f2da6a900426f1a-Briskin, Jeanne]; Siciliano, CarolAnn [/o=ExchangeLabs/ou=Exchange Administrative Group (FYDIBOHF23SPDLT)/cn=Recipients/cn=a0e84b7f6ddd4d92b99b2dba90aa86b1-CSICILIA]; Smith, Candace [/o=ExchangeLabs/ou=Exchange Administrative Group (FYDIBOHF23SPDLT)/cn=Recipients/cn=c702e7fd48544344976ddebba43d3548-Smith, Candace]; Srinivasan, Gautam [/o=ExchangeLabs/ou=Exchange Administrative Group (FYDIBOHF23SPDLT)/cn=Recipients/cn=d69332838210416ba51779b19025f832-GSRINIVA]; Dierker, Carl [/o=ExchangeLabs/ou=Exchange Administrative Group (FYDIBOHF23SPDLT)/cn=Recipients/cn=d1f9b7627f8e4efab65f9e9513bf323e-Dierker, Carl]; Coe, Mary [/o=ExchangeLabs/ou=Exchange Administrative Group (FYDIBOHF23SPDLT)/cn=Recipients/cn=bd3a8d3b158c48a589da33ccf49a583f-Mcoe]; Lattimore, Kraig [/o=ExchangeLabs/ou=Exchange Administrative Group (FYDIBOHF23SPDLT)/cn=Recipients/cn=dd04ae1aa4c64da4967c0f783ae49444-Lattimore, Kraig]; Koslow, Karin [/o=ExchangeLabs/ou=Exchange Administrative Group (FYDIBOHF23SPDLT)/cn=Recipients/cn=d00aa4f4fead4a3fa02f0cafe57ed221-Koslow, Karin]; Dolph, Becky [/o=ExchangeLabs/ou=Exchange Administrative Group (FYDIBOHF23SPDLT)/cn=Recipients/cn=c818363088ca49878e534da81c7d9e6e-DOLPH, BECKY]; Fugh, Justina [/o=ExchangeLabs/ou=Exchange Administrative Group (FYDIBOHF23SPDLT)/cn=Recipients/cn=54afbe2e36d3481c8c52d27ba3979d47-JFUGH]; Michaud, John [/o=ExchangeLabs/ou=Exchange Administrative Group (FYDIBOHF23SPDLT)/cn=Recipients/cn=1b492b9143fb48f2b4e1ad2b35d49def-Michaud, John]; Wilkes, Mary [/o=ExchangeLabs/ou=Exchange Administrative Group (FYDIBOHF23SPDLT)/cn=Recipients/cn=4795fd5f903446098f7344aee7402ceb-Wilkes, Mary]; Rhines, Dale [/o=ExchangeLabs/ou=Exchange Administrative Group (FYDIBOHF23SPDLT)/cn=Recipients/cn=469a919f86cf4f94ae3710ae6b4b18c6-Rhines, Dal]; Redden, Kenneth [/o=ExchangeLabs/ou=Exchange Administrative Group

(FYDIBOHF23SPDLT)/cn=Recipients/cn=b238fcf051ee4704ba6f56fdfa8566c2-Redden, Kenneth]; Nelson, Leverett [/o=ExchangeLabs/ou=Exchange Administrative Group (FYDIBOHF23SPDLT)/cn=Recipients/cn=2229a07c2cb442b182332d9dcc325f13-LNelson]; Quast, Sylvia [/o=ExchangeLabs/ou=Exchange Administrative Group (FYDIBOHF23SPDLT)/cn=Recipients/cn=fe20025c1dda47ce92e19f6c3c440c90-SQUAST]; Haskins, Antonio [/o=ExchangeLabs/ou=Exchange Administrative Group (FYDIBOHF23SPDLT)/cn=Recipients/cn=d1abb83f6ef5462dba7d808b68c75fe4-Haskins, Antonio]; Lewis, Jen [/o=ExchangeLabs/ou=Exchange Administrative Group (FYDIBOHF23SPDLT)/cn=Recipients/cn=ecd7b39ba6f14334bc308b9a3bc2ae5f-JLUE]; Logan, Paul [/o=ExchangeLabs/ou=Exchange Administrative Group (FYDIBOHF23SPDLT)/cn=Recipients/cn=00bb1376c15c4f21ab6fa197ecb6aed9-Logan, Paul]; Schmidt, Lorie [/o=ExchangeLabs/ou=Exchange Administrative Group (FYDIBOHF23SPDLT)/cn=Recipients/cn=f471d4b316f74b0591322b5c63f1d01c-Schmidt, Lorie]; Mclean, Kevin [/o=ExchangeLabs/ou=Exchange Administrative Group (FYDIBOHF23SPDLT)/cn=Recipients/cn=869a9152d655420594d8f94a966b8892-KMCLEAN]; Neugeboren, Steven [/o=ExchangeLabs/ou=Exchange Administrative Group (FYDIBOHF23SPDLT)/cn=Recipients/cn=cfd837ac503949a9820715b53ba921e6-SNEUGEBO]; Blake, Wendy [/o=ExchangeLabs/ou=Exchange Administrative Group (FYDIBOHF23SPDLT)/cn=Recipients/cn=902120f35d04482e86206d296ad452fc-Blake, Wendy]

Subject: Re: Agenda attached - Fall Industry Association and EPA OGC Dialogue Meeting (Call in number: Ex. 6 Code: Ex. 6

Thanks. Just got out of court. On the way.

Michael C. Formica
National Pork Producers Council
(202) 680-3820

Sent from my SwinePhone

On Sep 27, 2017, at 11:31 AM, Minoli, Kevin <Minoli.Kevin@epa.gov> wrote:

> External guests, please enter via our North side entrance. Once you have cleared security, someone will come down to escort you to the meeting location. Any logistical questions, please contact 202-564-8040.
>
> EPA Regional Counsels, to be connected via video, please use the same room as the Tuesday senior staff meetings if you can. If you will be using a different room, please notify Carla Veney.
>
> EPA VTC, we are asking the regions to please use the same room that is used for the Tuesday OGC Senior staff meetings. Thank you!
>
> <2017 Fall Industry Open House Agenda.pdf>
>
> <meeting.ics>

Message

From: Schwartz, Jerry [Jerry_Schwartz@afandpa.org]
Sent: 8/25/2017 5:51:29 PM
To: Fotouhi, David [/o=ExchangeLabs/ou=Exchange Administrative Group (FYDIBOHF23SPDLT)/cn=Recipients/cn=febaf0d56aab43f8a9174b18218c1182-Fotouhi, Da]; Schwab, Justin [/o=ExchangeLabs/ou=Exchange Administrative Group (FYDIBOHF23SPDLT)/cn=Recipients/cn=eed0f609c0944cc2bbdb05df3a10aadb-Schwab, Jus]
CC: Noe, Paul [Paul_Noe@afandpa.org]; James Tupper [tupper@tmw-law.com]
Subject: FW: Follow Up Material from Yesterday's Meeting
Attachments: HDR Cost Report Aug 08[1] copy.pdf; HDR Press Release 12.5.13[2].docx; AWB - HDR Toxics Technology Report - Final 11-7-2013[2] copy.pdf; Larry Walker WQBudgetLegReport2016.pdf; AFPA Meeting with EPA on HHWQC.pptx

Flag: Flag for follow up

Dear David and Justin,

Thank you for taking the time to meet with us yesterday and for assembling the team working on this issue. As I didn't catch the names of all those attending, I am sending this to you; I assume that you can distribute it as needed.

Just so you know, this is the same information we sent to Lee to respond to his request for additional information after our meeting with him (except for the PowerPoint). It includes issues that were not part of your request, but we thought you would find it helpful, nonetheless.

We do not have data on the drop off in permits issued in Oregon after the adoption of the HHWQC in that state. We will continue looking, but in the meantime EPA's Office of Water permits group may have the data.

I. Costs for Compliance with Maine Human Health Water Quality Criteria (HHWQC). You are correct that Maine dischargers did not conduct their own cost study, as was the case in WA and OR (discussed below). However, we note that the EPA cost study for Maine HHWQC compliance was extremely limited in terms of the pollutants for which cost estimates were derived. For example, the study did not consider PCB compliance costs at all and the only pollutant examined for the relevant pulp and paper mill was mercury (EPA assumed virtually no compliance costs for the mill, assuming it would only have to undertake a pollutant minimization plan). We think it is likely that dischargers could exceed permit limits for other pollutants based on the more stringent HHWQC included in the final EPA federal rule. Moreover, we note that other aspects of the federal rule for Maine (e.g., bacteria criteria) would impose costs on dischargers.

II. Cost study in OR: The attached "August 08" file documents costs for pulp and paper mill compliance with the Oregon HHWQC. Note that we have focused our discussion on costs for PCBs, as that is the pollutant that is largely responsible for the significant costs we have documented. We should make clear, however, that PCBs are NOT an issue unique to the pulp and paper industry. The industry doesn't use PCBs in the manufacturing process, but they enter the process from outside sources (wood, water, recovered paper, etc.) because of ubiquitous legacy contamination. Essentially, all ambient waters in the U.S. will exceed the federal Washington rule criterion of 7 parts per quadrillion (ppq) using Method 1668, and this level is not achievable in any effluent/runoff from any source. Indeed, even many laboratory blanks contain PCBs above that level.

Here is the key point from the summary of the study on page 3:

> Costs [in the table on page 3] provided above represent only four of the eight large mills located in Oregon. The cost related to simply installing technology to meet revised HHWQC at increased FCRs is significant and *would cost the Oregon pulp and paper industry in excess of $500 million*. In addition, *annual costs to operate these*

technologies would cost Oregon pulp and paper mills in the range of $30 to $90 million annually. (Emphasis added).

III. Cost Study in WA: In December 2013, a broad-based coalition of industry and local government entities issued a new HDR report, based on the same methodology as the OR report, documenting their members' compliance costs with the *state's* proposed HHWQC (see attached AWB report and press release). Importantly, those criteria were less stringent than the final EPA federal criteria and thus compliance costs for the EPA final rule would be *even greater* than those outlined in the HDR evaluation. Table 1 on page ES-3 provides the cost estimate in the billions of dollars for various treatment technologies, but as we stated, even those expenditures would not guarantee compliance.

Note that in contrast, the EPA cost analysis projected virtually no compliance costs on the assumption that dischargers would simply obtain variances or compliance schedules. This is an unfounded assumption as those implementation tools are costly and difficult to obtain (as you heard from the Wisconsin example), and only delay the inevitable cost expenditure, as compliance is required at the termination of the variance or compliance schedule. Furthermore, variances, extended compliance schedules and other unproven implementation tools leave municipal and industrial permittees and state agencies open to costly and resource-intensive litigation.

IV. Permitting Status in OR: We can state unequivocally that the industry is not "living with" the OR criteria. No pulp and paper mill NPDES permits have been issued based on the OR HHWQC and we believe that is the case for all major dischargers in the state. Indeed, NPDES permitting in OR has slowed considerably and caused significant backlogs for a variety of reasons, including the HHWQC. This prompted the legislature to require the state environmental agency to commission a study to examine the problem. That report (see "Larry Walker..." file attached) found a variety of problems contributed to the backlog, including, '[t]he difficulty for some dischargers to meet water quality standards, requiring complex regulatory solutions and/or expensive engineering." (Report, page 2).

An earlier draft of the Walker report included an even more direct statement regarding permitting status that we believe better reflects the current permitting status in Oregon:

"A number of the stakeholders indicate the adoption of new water quality standards or changes to existing standards as a result of either litigation or EPA disapprovals has had an ongoing disruptive effect on the renewal of wastewater NPDES permits in Oregon. These events, and, in some cases, the absence of an effective response to these events in terms of direction to NPDES permit writers, has contributed to significant delays in NPDES permitting, and increased NPDES permit backlog. After analysis it became clear that, despite the recognition of this problem, effective strategies or processes are not in place to deal with the long term effect of current and future water quality standards, 303-d listings and resulting TMDL wasteload allocations on the NPDES permitting program.

In addition, indications that the NPDES permitting process is not consistently aligned with EPA and DEQ legal requirements are illustrated in a recent document and in feedback received from various stakeholders. Failure to address such deficiencies affects the NPDES permit renewal backlog, as rework is required to meet legal requirements while an NPDES permit remains incomplete."

V. Risk Slides (discussed individually)

a. Risk Comparison (slide 8): This slide compares various risks of dying versus the hypothetical risk of contracting cancer under several EPA policies and rules. The key point for Washington is that by overriding the 2000 Methodology and protecting high consuming tribes at the 10^{-6} risk level, the criteria protect the general population of Washington at 10^{-8} — resulting in incredibly stringent, expensive, and unachievable permit limits. Moreover, those risks are much more remote than those in other EPA rules and programs, and those of other agencies.

b. Compounded Conservatism/EPA HHWQC Exposure Assumptions (slide 6): The slide demonstrates the extremely conservative nature of the national HHWQC. The equation deriving the criteria assumes everyone has ALL of the characteristics in the second column in the slide. It is not likely that anyone has all these characteristics, yet this is the basis for the national HHWQC. The WA and ME criteria are even more conservative, assuming higher fish consumption rates.

c. Risk Choices (slide 7): This slide demonstrates there is no measurable human health benefit of insisting on protecting the tribes at a 10^{-6} risk level, as the EPA now requires. Because the risk levels look at *excess* risk over the baseline, the theoretical risks of cancer from implementation of HHWQC based on various risk levels differ by decimal points, and are certainly not measurable. Yet, as discussed, these risk level decisions have a dramatic impact on the cost of compliance for both state agencies and permitted industrial and municipal sources.

KEY POINT: We understand that tribal treaty rights raise complicated legal issues. The Washington petition we filed and the Maine amended complaint provide well-reasoned arguments why those treaties don't require EPA's new policies that override cooperative federalism, and reject state HHWQC.

Even if one believes that those treaties do require special protection of tribal treaty rights (which we don't), there is no basis for EPA to determine that this requires the EPA-mandated HHWQC (including setting a 10^{-6} risk level for high consuming subpopulations such as the tribes) to protect those rights. As these slides demonstrate, the national HHWQC are incredibly protective as they are based on extremely conservative assumptions. Further, there is no measurable benefit from criteria based on the different risk levels depicted. Finally, our WA petition for reconsideration demonstrates that EPA has always viewed risks resulting from criteria set at 10^{-6}, 10^{-5} and 10^{-4} to be de minimis, and a new policy determining that only a 10^{-6} risk level is protective would be a radical change in policy with implications for other risk programs in EPA and in other agencies.

VI. Additional Reading: Finally, here is a link to a blog and an article I wrote that was published in BNA Bloomberg. It is based on a lot of work by NCASI and others. It is rather lengthy, but it provides a (hopefully) easy to understand explanation of the issues involved.

Thanks again for your time yesterday, and we would be happy to provide any additional information. Jerry

Jerry Schwartz
Senior Director
Energy and Environmental Policy
Jerry_Schwartz@afandpa.org
Ex. 6
AMERICAN FOREST & PAPER ASSOCIATION
1101 K Street, N.W., Suite 700
Washington, D.C. 20005

American Forest & Paper Association

AF&PA/EPA Meeting on Human Health Water Quality Criteria

BETTER PRACTICES BETTER PLANET 2020

Introduction – General Concerns

- Use of treaty rights claims to change CWA requirements
- Major change in risk policy, with potential impacts for other programs and agencies.
- Use of new "suppression effect" theory to radically increase fish consumption levels used to calculate standards; much more stringent and expensive permit limits.
- Washington rule could cost over $1B, with no measurable benefits. OIRA should request that EPA submit the rule for review.
- Washington rule is less stringent than Maine rule, because the Washington rule is based on a Fish Consumption Rate of 175 g/d v. 286 g/d for Maine.

American Forest & Paper Association

Legal Issues

- EPA does not have authority to go beyond CWA, irrespective of tribal treaty rights. *NAHB*; *AF&PA*
- Creating a new designated use—not allowed under CWA, EPA regulations, Maine law
- Major change from existing policy (2000 Methodology)—violates APA

American Forest & Paper Association

Policy Issue: Risk Levels

- 2000 Methodology (and NTR, GLI)—State discretion
  - General population: 10^{-5} or 10^{-6}, as long as subpopulation at 10^{-4}
- Policy Rationale
  - "Given the wide variations in consumption patterns, it would *not seem to be possible for States and Tribes to provide the same level of protection* from contaminated fish for all consumers." 63 Fed. Reg. 36,742, 36,775 (July 7, 1998). Methodology states, "[t]he point is that the *risks for different population groups are not the same.*" Methodology at 2-7 (emphasis added)
  - 10^{-6} is **not the only protective risk level** for high consumers
    - Methodology: 10^{-6}, 10^{-5}, and 10^{-4} for high consumers are all *de minimis* risk
    - Long-standing EPA risk policy
    - Precedent for other EPA programs and agencies.

American Forest & Paper Association

HHWQC Criteria: Three Elements

HHWQC =

Health Protection Target	Substance Toxicity	Exposure Scenario
• excess cancer risk or • hazard quotient	• risk specific dose or • reference dose	• body weight **AND** • drinking water intake **AND** • **fish consumption rate** **AND** • biological accumulation **AND** • water column concentration **AND** • cooking loss **AND** • duration of exposure **AND** • other exposures

Source: NCASI

5

American Forest & Paper Association

Human health water quality criteria (HHWQC) are derived using three components: a health protection target; a toxicity value for the substance, and; an exposure scenario

The exposure scenario contains both explicit parameters (i.e., those that are visible in the criteria derivation equation) and implicit parameters (i.e., assumptions that influence the calculated criteria but do not appear in the published equation)

EPA has recently encouraged states to alter past practices with respect to the fish consumption rate and "other exposures" (i.e., relative source contribution, or RSC) values used in the criteria derivation equation

EPA HHWQC Exposure Assumptions

Everyone has all of the following characteristics:

Parameter	National Default Value	Proposal for Washington	Proposal for Maine (Indian Lands)
Weighs…	80kg (176 lbs)	Same	Same
Every Day for 70 Years Drinks Water From the Same Location That is…	•2.4 L/day (2.5 quarts): •Unfiltered and Untreated *and* •From Surface Water (lakes, streams, etc.) *and* •Contaminated at the HHWQC Level	Same	Same
AND Every Day for 70 Years Consumes Fish From the Same Location That Is …	•22 g/day (.8 oz): •From Local Waters, Grocery Stores, Aquaculture, Foreign Countries (excluding marine) *and* •From Waters Contaminated at the HHWQC Level *and* •Contaminated with Pollutants from the Water to the Maximum Extent Possible *and* •Contaminated with the Same Amount of Pollutants Despite Reductions from Cooking	175 g/d (.39 lbs) All Other Assumptions Are The Same	286 g/d (.63 lbs) (the rate that is unsuppressed by concerns about the safety of available fish) All Other Assumptions Are The Same

Risk Choices

Impact of EPA Choosing 10^{-6} v. 10^{-5} v. 10^{-4} Excess Lifetime Cancer Risk Level

"10^{-6} means the "risk of developing cancer…would be one in a million *on top of the background risk* of developing cancer from all other exposures." (emphasis added)*

If Everyone has ALL of the Equation Characteristics:

Background Risk of Developing Cancer	Theoretical Risk with 10^{-4}	Theoretical Risk with 10^{-5}	Theoretical Risk with 10^{-6}
4 in 10, or .40000	.4001	.40001	.400001

* EPA Proposed Criteria for Maine, 81 *Fed. Reg.* 23243 (4/20/16)

American Forest & Paper Association

Risk Comparison

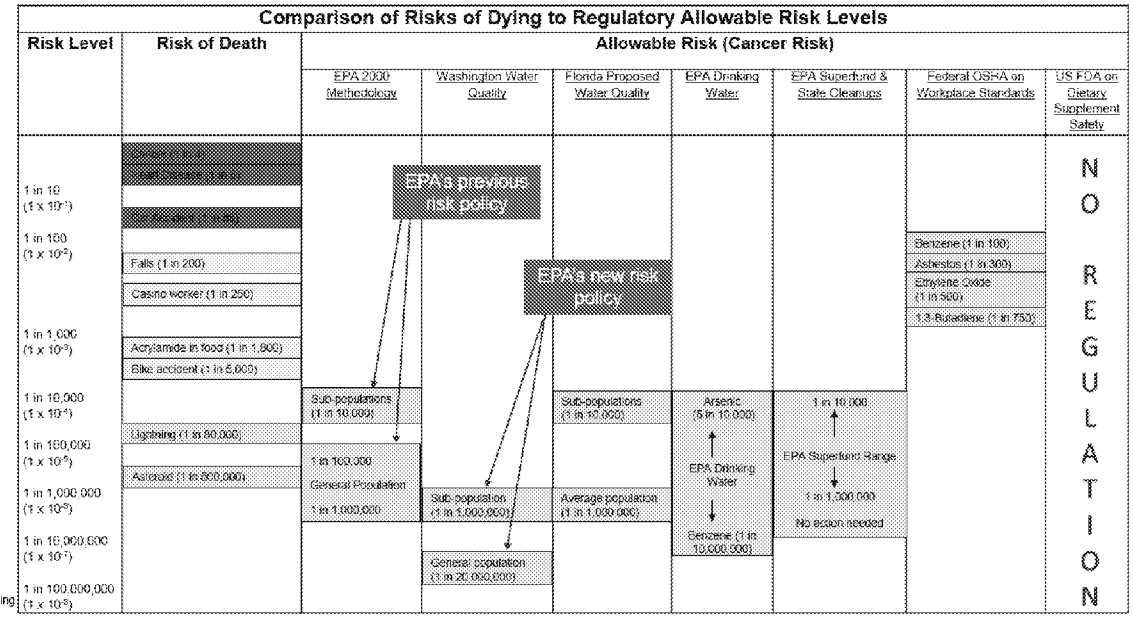

Impacts for Other Programs and Agencies

- Superfund
  - ARARs
  - NCP: "For known or suspected carcinogens, acceptable exposure levels are generally concentration levels that represent an excess upper bound lifetime cancer risk to an individual of between 10^{-4} and 10 using information on the relationship between dose and response."
- CAA:
  - MATS cites tribal treaty rights

American Forest & Paper Association

Tribal Consumers as Target Population

- New policy to protect tribal consumers as the target population
  - Contrary to 2000 Methodology, and has not been properly adopted as policy change under APA
  - The existing methodology to protect general population already provides sufficient protection of high consumers
  - Targets the general population at levels of 10^{-7} or lower, depending on the exact assumptions used to represent the tribe.

American Forest & Paper Association

"Unsuppressed" FCR of 286 Grams/Day

- New policy to base FCR on high consumers, instead of general population;
  - Not needed to be protective
  - Violates APA
- To protect the designated use, the FCR must represent "sustenance level of consumption unsuppressed by pollutant concerns."
  - "Scientific and policy judgment" is "necessary and appropriate"
  - Based on an FAQ document. 81 FR 23245.
  - Wabanki study : "describe the lifestyle that was universal when resources were in better condition and that some tribal members practice today (and *many more that are waiting to resume once restoration goals and protective standards are in place*.)" 81 FR 23245 (emphasis added)

American Forest & Paper Association

"Unsuppressed" FCR of 286 Grams/Day

- 1991 Maine licensed anglers study
  - 95% of anglers consumed 26 g/d or less. Virtually no fish advisories, so it is an "unsuppressed rate" (no fear of contamination)
  - 148 Native Americans included in survey. 95th percentile was 51 g/d. Max was 182 g/d. But only 6% consumed > than Maine FCR of 32.4 g/d.
- Subsistence lifestyle no longer necessary for survival in Maine
- Tribal members not likely "waiting to resume" the traditional lifestyle. Studies show when commercial food is available, tribal members consumption patters evolve.

American Forest & Paper Association

Legal/Policy Issues: CWA and EPA Regulations

- States are the primary authority to set criteria under the CWA
- State criteria must protect the designated use and be based on "sound scientific rationale"(40 C.F.R. § 131.11(a))
- State criteria can deviate from federal criteria (40 C.F.R. § 131.11(b))
  - Can modify to reflect "site-specific conditions "
  - Can use "other scientifically defensible methods"
- State criteria can vary from EPA guidance or recommendations and still be scientifically defensible and protective, particularly in light of the conservative nature of criteria derivation and EPA's own recognition that risks at 10^{-6}, 10^{-5}, or 10^{-4} are *de minimis*
- State criteria that are scientifically defensible comply with the Act and EPA regulations, and must be approved by EPA, even if they are not consistent with EPA recommendations, guidance or policy.
- Called for by the CWA—Cooperative federalism

American Forest & Paper Association

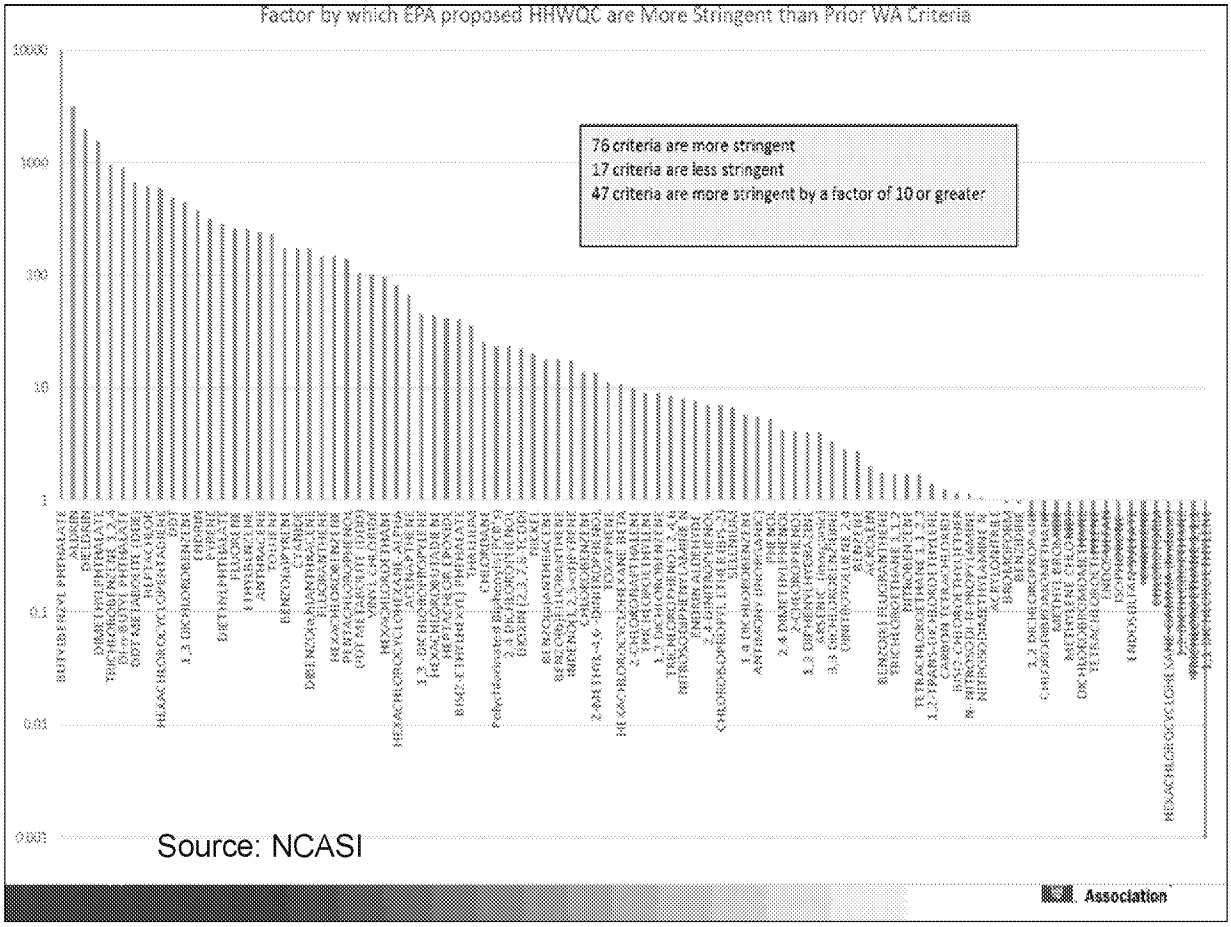
Factor by which EPA proposed HHWQC are More Stringent than Prior WA Criteria
10000
1000
100
10
1
0.1
0.01
0.001
76 criteria are more stringent
17 criteria are less stringent
47 criteria are more stringent by a factor of 10 or greater
Source: NCASI
Association

Wastewater Treatment Technology Review For WA State Standards

- Even if standards were an order of magnitude less stringent (10x), and if advanced treatment technology were economically feasible, standards could not be met for PCB's and arsenic with available technology.
- Conclusion: EPA's proposed WQS for WA are neither technically nor economically feasible.

- Source: HDR Engineering, Inc. Report

American Forest & Paper Association

Anticipated Costs to Address EPA PCB Criterion

Table 10. Treatment Technology Total Project Costs in 2013 Dollars for a 0.5 mgd Facility and a 25 mgd Facility

Alternative	Total Construction Cost, 2013 dollars ($ Million)	O&M Net Present Value, 2013 dollars ($ Million)*	Total Net Present Value, 2013 dollars ($ Million)	NPV Unit Cost, 2013 dollars ($/gpd)
0.5 mgd:				
Baseline (Conventional Secondary Treatment)	15 - 32	0.5 - 1.1	16 - 33	31 - 66
Advanced Treatment – MF/RO**	27 - 58	3.2 - 6.8	30 - 65	60 - 130
Advanced Treatment – MF/GAC	33 - 70	5 - 10.8	38 - 81	76 - 162
Incremental Increase to Advanced Treatment MF/RO	12 - 26	2.7 - 5.7	15 - 32	30 - 64
Incremental Increase to Advanced Treatment MF/GAC	18 - 38	4.6 - 9.8	22 - 48	45 - 96
25 mgd:				
Baseline (Conventional Secondary Treatment)	156 - 335	25 - 54	182 - 389	7 - 16
Advanced Treatment – MF/RO**	283 - 606	157 - 336	440 - 942	18 - 38
Advanced Treatment – MF/GAC	343 - 736	252 - 541	595 - 1276	24 - 51
Incremental Increase to Advanced Treatment MF/RO	127 - 272	131 - 281	258 - 553	10 - 22
Incremental Increase to Advanced Treatment MF/GAC	187 - 401	226.9 - 486	414 - 887	17 - 35

* Does not include the cost for labor.
** Assumes zero liquid discharge for RO brine management, followed by evaporation ponds. Other options are available as listed in Section 4.4.2.
MF/RO=membrane filtration/reverse osmosis
MF/GAC=membrane filtration/granulated activated carbon
O&M=operations and maintenance
gpd=gallons per day

American Forest & Paper Association

Treatment Technology Review and Assessment

Association of Washington Business
Association of Washington Cities
Washington State Association of Counties

November 7, 2013

500 108th Avenue NE
Suite 1200
Bellevue, WA 98004-5549
(425) 450-6200

Table of Contents

Executive Summary **1**

1.0 Introduction **1**

2.0 Derivation of the Baseline Study Conditions and Rationale for Selection of Effluent Limitations **3**

2.1 Summary of Water Quality Criteria 3
2.2 Background 3
2.3 Assumptions Supporting Selected Ambient Water Quality Criteria and Effluent Limitations 4

3.0 Wastewater Characterization Description **8**

3.1 Summary of Wastewater Characterization 8
3.2 Existing Wastewater Treatment Facility 8
3.3 Toxic Constituents 9

4.0 Treatment Approaches and Costs **10**

4.1 Summary of Treatment Approach and Costs 10
4.2 Constituent Removal – Literature Review 10
4.2.1 Polychlorinated Biphenyls 10
4.2.2 Mercury 11
4.2.3 Arsenic 13
4.2.1 Polycyclic Aromatic Hydrocarbons 16
4.3 Unit Processes Evaluated 17
4.4 Unit Processes Selected 20
4.4.1 Baseline Treatment Process 22
4.4.2 Advanced Treatment – MF/RO Alternative 25
4.4.3 Advanced Treatment – MF/GAC Alternative 29
4.5 Steady-State Mass Balance 33
4.6 Adverse Environmental Impacts Associated with Advanced Treatment Technologies 34
4.7 Costs 36
4.7.1 Approach 36
4.7.2 Unit Cost Values 37
4.7.3 Net Present Value of Total Project Costs and Operations and Maintenance Cost in 2013 Dollars 38
4.7.4 Unit Cost Assessment 39
4.8 Pollutant Mass Removal 44
4.9 Sensitivity Analysis 45

5.0 Summary and Conclusions **46**

6.0 References **48**

7.0 Appendices 51

List of Tables

Table 1. Treatment Technology Costs in 2013 Dollars for a 5-mgd Facility 3
Table 2. Unit Cost by Contaminant for a 5-mgd Facility Implementing Advanced Treatment using Membrane Filtration/Reverse Osmosis 4
Table 3: Summary of Effluent Discharge Toxics Limits 7
Table 4. General Wastewater Treatment Facility Characteristics 8
Table 5: Summary of Arsenic Removal Technologies[1] 13
Table 6. Contaminants Removal Breakdown by Unit Process 20
Table 7. Unit Processes Description for Each Alternative 22
Table 8. Brine Disposal Method Relative Cost Comparison 26
Table 9. Energy Breakdown for Each Alternative (5 mgd design flow) 35
Table 10. Economic Evaluation Variables 37
Table 11. Treatment Technology Total Project Costs in 2013 Dollars for a 5 mgd Facility 38
Table 12. Treatment Technology Total Project Costs in 2013 Dollars for a 0.5 mgd Facility and a 25 mgd Facility 42
Table 13. Pollutant Mass Removal by Contaminant for a 5 mgd Facility 44
Table 14. Unit Cost by Contaminant for a 5 mgd Facility Implementing Advanced Treatment using MF/RO 45

List of Figures

Figure 1. Water Treatment Configuration for Arsenic Removal (WesTech) 14
Figure 2. WesTech Pressure Filters for Arsenic Removal 15
Figure 3. Baseline Flowsheet – Conventional Secondary Treatment 24
Figure 4. Advanced Treatment Flowsheet – Tertiary Microfiltration and Reverse Osmosis 28
Figure 5. Advanced Treatment Flowsheet – Tertiary Microfiltration and Granular Activated Carbon 32
Figure 6. Primary Clarifier Inputs/Outputs 33
Figure 7. Greenhouse Gas Emissions for Each Alternative 36
Figure 8: Capital Cost Curve Comparison for Baseline Treatment, MF/RO, and MF/GAC 43
Figure 9: NPV Cost Curve Comparison for Baseline Treatment, MF/RO, and MF/GAC 43

List of Appendices

Appendix A - Unit Process Sizing Criteria
Appendix B - Greenhouse Gas Emissions Calculation Assumptions

Sierra Club v. EPA 18cv3472 NDCA Tier 1 ED_002061_00163679-00003

Acronyms

AACE	Association for the Advancement of Cost Engineering
AOP	advanced oxidation processes
AWB	Association of Washington Businesses
BAC	biological activated carbon
BAP	benzo(a)pyrene
BOD	biochemical oxygen demand
BTU	British thermal unit
CEPT	Chemically-enhanced primary treatment
cf	cubic feet
CIP	clean in place
CRITFC	Columbia River Inter-Tribal Fish Commission
Ecology	Washington Department of Ecology
EPA	U.S. Environmental Protection Agency
FCR	fish consumption rate
g/day	grams per day
GAC	granular activated carbon
gal	gallon
gfd	gallons per square foot per day
GHG	greenhouse gas
gpd	gallons per day
gpm	gallons per minute
GWh	giga watt hours
HDR	HDR Engineering, Inc.
HHWQC	human health water quality criteria
HRT	hydraulic residence time
IPCC	Intergovernmental Panel on Climate Change
kg	kilogram
KWh/MG	kilowatt-hours per million gallons
lb	pound
MBR	membrane bioreactor
MCL	maximum contaminant level
MF	microfiltration
mgd	million gallons per day
mg/L	milligrams per liter
MMBTU	million British thermal units
MWh/d	megawatt-hours per day
NF	nanofiltration
ng/L	nanograms per liter
NPDES	National Pollutant Discharge Elimination System
NPV	net present value
O&M	operations and maintenance
ODEQ	Oregon Department of Environmental Quality
PAC	powdered activated carbon
PAH	polycyclic aromatic hydrocarbons
PCB	polychlorinated biphenyls
PE	population equivalents
pg/L	picograms per liter
PIX	potable ion exchange

ppm	parts per million
RO	reverse osmosis
SDWA	Safe Drinking Water Act
sf	square feet
SGSP	salinity gradient solar pond
SRT	solids retention time
Study Partners	Association of Washington Businesses/Association of Washington Cities and Washington State Association of Counties consortium
TDS	total dissolved solids
TMDL	total maximum daily load
TSS	total suspended solids
UF	ultrafiltration
µg/L	micrograms per liter
USDA	U.S. Department of Agriculture
UV	ultraviolet
WAC	Washington Administrative Code
WAS	waste activated sludge
WLA	waste load allocation
WWTP	wastewater treatment plant
ZLD	zero liquid discharge

Executive Summary

This study evaluated treatment technologies potentially capable of meeting the State of Washington Department of Ecology's (Ecology) revised effluent discharge limits associated with revised human health water quality criteria (HHWQC). HDR Engineering, Inc. (HDR) completed a literature review of potential technologies and an engineering review of their capabilities to evaluate and screen treatment methods for meeting revised effluent limits for four constituents of concern: arsenic, benzo(a)pyrene (BAP), mercury, and polychlorinated biphenyls (PCBs). HDR selected two alternatives to compare against an assumed existing baseline secondary treatment system utilized by dischargers. These two alternatives included enhanced secondary treatment with membrane filtration/reverse osmosis (MF/RO) and enhanced secondary treatment with membrane filtration/granulated activated carbon (MF/GAC). HDR developed capital costs, operating costs, and a net present value (NPV) for each alternative, including the incremental cost to implement improvements for an existing secondary treatment facility.

Currently, there are no known facilities that treat to the HHWQC and anticipated effluent limits that are under consideration. Based on the literary review, research, and bench studies, the following conclusions can be made from this study:

- Revised HHWQC based on state of Oregon HHWQC (2001) and U.S. Environmental Protection Agency (EPA) "National Recommended Water Quality Criteria" will result in very low water quality criteria for toxic constituents.
- There are limited "proven" technologies available for dischargers to meet required effluent quality limits that would be derived from revised HHWQC.
    - Current secondary wastewater treatment facilities provide high degrees of removal for toxic constituents; however, they are not capable of compliance with water quality-based National Pollutant Discharge Elimination System (NPDES) permit effluent limits derived from the revised HHWQC.
    - Advanced treatment technologies have been investigated and candidate process trains have been conceptualized for toxics removal.
        - Advanced wastewater treatment technologies may enhance toxics removal rates; however, they will not be capable of compliance with HHWQC-based effluent limits for PCBs. The lowest levels achieved based on the literature review were between <0.00001 and 0.00004 micrograms per liter (µg/L), as compared to a HHWQC of 0.0000064 µg/L.
        - Based on very limited performance data for arsenic and mercury from advanced treatment information available in the technical literature, compliance with revised criteria may or may not be possible, depending upon site specific circumstances.
            - Compliance with a HHWQC for arsenic of 0.018 µg/L appears unlikely. Most treatment technology performance information available in the literature is based on drinking water treatment applications targeting a much higher Safe Drinking Water Act (SDWA) maximum contaminant level (MCL) of 10 µg/L.
            - Compliance with a HHWQC for mercury of 0.005 µg/L appears to be potentially attainable on an average basis, but perhaps not if effluent limits are structured on a maximum monthly, maximum

weekly or maximum daily basis. Some secondary treatment facilities attain average effluent mercury levels of 0.009 to 0.066 µg/L. Some treatment facilities with effluent filters attain average effluent mercury levels of 0.002 to 0.010 µg/L. Additional advanced treatment processes are expected to enhance these removal rates, but little mercury performance data is available for a definitive assessment.

- Little information is available to assess the potential for advanced technologies to comply with revised BAP criteria.

  - Some technologies may be effective at treating identified constituents of concern to meet revised limits while others may not. It is therefore even more challenging to identify a technology that can meet all constituent limits simultaneously.
  - A HHWQC that is one order-of-magnitude less stringent could likely be met for mercury and BAP; however, it appears PCB and arsenic limits would not be met.

- Advanced treatment processes incur significant capital and operating costs.
  - Advanced treatment process to remove additional arsenic, BAP, mercury, and PCBs would combine enhancements to secondary treatment with microfiltration membranes and reverse osmosis or granular activated carbon and increase the estimated capital cost of treatment from $17 to $29 in dollars per gallon per day of capacity (based on a 5.0-million-gallon-per-day (mgd) facility).
  - The annual operation and maintenance costs for the advanced treatment process train will be substantially higher (approximately $5 million - $15 million increase for a 5.0 mgd capacity facility) than the current secondary treatment level.

- Implementation of additional treatment will result in additional collateral impacts.
  - High energy consumption.
  - Increased greenhouse gas emissions.
  - Increase in solids production from chemical addition to the primaries. Additionally, the membrane and GAC facilities will capture more solids that require handling.

- It appears advanced treatment technology alone cannot meet all revised water quality limits and implementation tools are necessary for discharger compliance.
  - Implementation flexibility will be necessary to reconcile the difference between the capabilities of treatment processes and the potential for HHWQC driven water quality based effluent limits to be lower than attainable with technology

Table 1 indicates that the unit NPV cost for baseline conventional secondary treatment ranges from $13 to $28 per gallon per day of treatment capacity. The unit cost for the advanced treatment alternatives increases the range from the low $20s to upper $70s on a per gallon per-day of treatment capacity. The resulting unit cost for improving from secondary treatment to advanced treatment ranges between $15 and $50 per gallon per day of treatment capacity. Unit costs were also evaluated for both a 0.5 and 25 mgd facility. The range of unit costs for improving a 0.5 mgd from secondary to advanced treatment is $60 to $162 per gallon per day of

treatment capacity. The range of unit costs for improving a 25 mgd from secondary to advanced treatment is $10 to $35 per gallon per day of treatment capacity.

Table 1. Treatment Technology Costs in 2013 Dollars for a 5-mgd Facility

Alternative	Total Construction Cost, 2013 dollars ($ Million)	O&M Net Present Value, 2013 dollars ($ Million) ***	Total Net Present Value, 2013 dollars ($ Million)	NPV Unit Cost, 2013 dollars ($/gpd)
Baseline (Conventional Secondary Treatment) *	59 - 127	5 - 11	65 - 138	13 - 28
Incremental Increase to Advanced Treatment - MF/RO	48 - 104	26 - 56	75 - 160	15 - 32
Advanced Treatment - MF/RO **	108 - 231	31 - 67	139 - 298	28 - 60
Incremental Increase to Advanced Treatment - MF/GAC	71 - 153	45 - 97	117 - 250	23 - 50
Advanced Treatment - MF/GAC	131 - 280	50 - 108	181 - 388	36 - 78

* Assumed existing treatment for dischargers. The additional cost to increase the SRT to upwards of 30-days is about $12 - 20 million additional dollars in total project cost for a 5 mgd design flow.

** Assumes zero liquid discharge for RO brine management, followed by evaporation ponds. Other options are available as listed in Section 4.4.2.

*** Does not include the cost for labor.

mgd=million gallons per day
MG=million gallons
O&M=operations and maintenance
Net Present Value = total financed cost assuming a 5% nominal discount rate over an assumed 25 year equipment life.

Costs presented above are based on a treatment capacity of 5.0 mgd, however, existing treatment facilities range dramatically across Washington in size and flow treated. The key differences in cost between the baseline and the advanced treatment MF/RO are as follows:

- Larger aeration basins than the baseline to account for the longer SRT (>8 days versus <8 days).
- Additional pumping stations to pass water through the membrane facilities and granulated activated carbon facilities. These are based on peak flows.
- Membrane facilities (equipment, tanks chemical feed facilities, pumping, etc.) and replacement membrane equipment.
- Granulated activated carbon facilities (equipment, contact tanks, pumping, granulated activated carbon media, etc.)
- Additional energy and chemical demand to operate the membrane and granulated activated carbon facilities
- Additional energy to feed and backwash the granulated activated carbon facilities.
- Zero liquid discharge facilities to further concentrate the brine reject.
    - Zero liquid discharge facilities are energy/chemically intensive and they require membrane replacement every few years due to the brine reject water quality.

- Membrane and granulated activated carbon media replacement represent a significant maintenance cost.
- Additional hauling and fees to regenerate granulated activated carbon off-site.

The mass of pollutant removal by implementing advanced treatment was calculated based on reducing current secondary effluent discharges to revised effluent limits for the four pollutants of concern. These results are provided in Table 2 as well as a median estimated unit cost basis for the mass of pollutants removed.

Table 2. Unit Cost by Contaminant for a 5-mgd Facility Implementing Advanced Treatment using Membrane Filtration/Reverse Osmosis

Component	PCBs	Mercury	Arsenic	BAPs
Required HHWQC based Effluent Quality (µg/L)	0.0000064	0.005	0.018	0.0013
Current Secondary Effluent Concentration (µg/L)	0.002	0.025	7.5	0.006
Total Mass Removed (lbs) over 25 year Period	0.76	7.6	2,800	1.8
Median Estimated Unit Cost (NPV per total mass removed in pounds over 25 years)	$290,000,000	$29,000,000	$77,000	$120,000,000

Collateral adverse environmental impacts associated with implementing advanced treatment were evaluated. The key impacts from this evaluation include increased energy use, greenhouse gas production, land requirements and treatment residuals disposal. Operation of advanced treatment technologies could increase electrical energy by a factor of 2.3 to 4.1 over the baseline secondary treatment system. Direct and indirect greenhouse gas emission increases are related to the operation of advanced treatment technologies and electrical power sourcing, with increases of at least 50 to 100 percent above the baseline technology. The energy and air emission implications of advanced treatment employing granulated activated carbon construction of advanced treatment facilities will require additional land area. The availability and cost of land adjacent to existing treatment facilities has not been included in cost estimates, but could be very substantial. It is worthwhile noting residual materials from treatment may potentially be hazardous and their disposal may be challenging to permit. Costs assume zero liquid discharge from the facilities.

1.0 Introduction

Washington's Department of Ecology (Ecology) has an obligation to periodically review waterbody "designated uses" and to modify, as appropriate, water quality standards to ensure those uses are protected. Ecology initiated this regulatory process in 2009 for the human health-based water quality criteria (HHWQC) in Washington's *Surface Water Quality Standards* (Washington Administrative Code [WAC] 173-201A). HHWQC are also commonly referred to as "toxic pollutant water quality standards." Numerous factors will influence Ecology's development of HHWQC. The expectation is that the adopted HHWQC will be more stringent than current adopted criteria. National Pollutant Discharge Elimination System (NPDES) effluent limits for permitted dischargers to surface waters are based on U.S. Environmental Protection Agency (EPA) and state guidance. Effluent limits are determined primarily from reasonable potential analyses and waste load allocations (WLAs) from total maximum daily loads (TMDLs), although the permit writer may use other water quality data. Water quality-based effluent limits are set to be protective of factors, including human health, aquatic uses, and recreational uses. Therefore, HHWQC can serve as a basis for effluent limits. The presumption is that more stringent HHWQC will, in time, drive lower effluent limits. The lower effluent limits will require advanced treatment technologies and will have a consequent financial impact on NPDES permittees. Ecology anticipates that a proposed revision to the water quality standards regulation will be issued in first quarter 2014, with adoption in late 2014.

The Association of Washington Businesses (AWB) is recognized as the state's chamber of commerce, manufacturing and technology association. AWB members, along with the Association of Washington Cities and Washington State Association of Counties (collectively referred to as Study Partners), hold NPDES permits authorizing wastewater discharges. The prospect of more stringent HHWQC, and the resulting needs for advanced treatment technologies to achieve lower effluent discharge limits, has led this consortium to sponsor a study to assess technology availability and capability, capital and operations and maintenance (O&M) costs, pollutant removal effectiveness, and collateral environmental impacts of candidate technologies.

The "base case" for the study began with the identification of four nearly ubiquitous toxic pollutants present in many industrial and municipal wastewater discharges, and the specification of pollutant concentrations in well-treated secondary effluent. The pollutants are arsenic, benzo(a)pyrene (BAP), mercury and polychlorinated biphenyls (PCBs), which were selected for review based on available monitoring data and abundant presence in the environment. The purpose of this study is to review the potential water quality standards and associated treatment technologies able to meet those standards for four pollutants.

A general wastewater treatment process and wastewater characteristics were used as the common baseline for comparison with all of the potential future treatment technologies considered. An existing secondary treatment process with disinfection at a flow of 5 million gallons per day (mgd) was used to represent existing conditions. Typical effluent biochemical oxygen demand (BOD) and total suspended solids (TSS) were assumed between 10 and 30 milligrams per liter (mg/L) for such a facility and no designed nutrient or toxics removal was assumed for the baseline existing treatment process.

Following a literature review of technologies, two advanced treatment process options for toxics removal were selected for further evaluation based on the characterization of removal effectiveness from the technical literature review and Study Partners' preferences. The two tertiary treatment options are microfiltration membrane filtration (MF) followed by either reverse osmosis (RO) or granular activated carbon (GAC) as an addition to an existing secondary treatment facility.

The advanced treatment technologies are evaluated for their efficacy and cost to achieve the effluent limitations implied by the more stringent HHWQC. Various sensitivities are examined, including for less stringent adopted HHWQC, and for a size range of treatment systems. Collateral environmental impacts associated with the operation of advanced technologies are also qualitatively described.

2.0 Derivation of the Baseline Study Conditions and Rationale for Selection of Effluent Limitations

2.1 Summary of Water Quality Criteria

Surface water quality standards for toxics in the State of Washington are being updated based on revised human fish consumption rates (FCRs). The revised water quality standards could drive very low effluent limitations for industrial and municipal wastewater dischargers. Four pollutants were selected for study based on available monitoring data and abundant presence in the environment. The four toxic constituents are arsenic, BAP, mercury, and PCBs.

2.2 Background

Ecology is in the process of updating the HHWQC in the state water quality standards regulation. Toxics include metals, pesticides, and organic compounds. The human health criteria for toxics are intended to protect people who consume water, fish, and shellfish. FCRs are an important factor in the derivation of water quality criteria for toxics.

The AWB/City/County consortium (hereafter "Study Partners") has selected four pollutants for which more stringent HHWQC are expected to be promulgated. The Study Partners recognize that Ecology probably will not adopt more stringent arsenic HHWQC so the evaluation here is based on the current arsenic HHWQC imposed by the National Toxics Rule. Available monitoring information indicates these pollutants are ubiquitous in the environment and are expected to be present in many NPDES discharges. The four pollutants include the following:

- Arsenic
  - Elemental metalloid that occurs naturally and enters the environment through erosion processes. Also widely used in batteries, pesticides, wood preservatives, and semiconductors. Other current uses and legacy sources in fungicides/herbicides, copper smelting, paints/dyes, and personal care products.
- Benzo(a)pyrene (BAP)
  - Benzo(a)pyrene is a polycyclic aromatic hydrocarbon formed by a benzene ring fused to pyrene as the result of incomplete combustion. Its metabolites are highly carcinogenic. Sources include wood burning, coal tar, automobile exhaust, cigarette smoke, and char-broiled food.
- Mercury
  - Naturally occurring element with wide legacy uses in thermometers, electrical switches, fluorescent lamps, and dental amalgam. Also enters the environment through erosion processes, combustion (especially coal), and legacy industrial/commercial uses. Methylmercury is an organometallic that is a bioaccumulative toxic. In aquatic systems, an anaerobic methylation process converts inorganic mercury to methylmercury.
- Polychlorinated Biphenyls (PCBs)
  - Persistent organic compounds historically used as a dielectric and coolant in electrical equipment and banned from production in the U.S. in 1979. Available information indicates continued pollutant loadings to the environment as a byproduct from the use of some pigments, paints, caulking, motor oil, and coal combustion.

2.3 Assumptions Supporting Selected Ambient Water Quality Criteria and Effluent Limitations

Clean Water Act regulations require NPDES permittees to demonstrate their discharge will "not cause or contribute to a violation of water quality criteria." If a "reasonable potential analysis" reveals the possibility of a standards violation, the permitting authority is obliged to develop "water quality-based effluent limits" to ensure standards achievement. In addition, if ambient water quality monitoring or fish tissue assessments reveal toxic pollutant concentrations above HHWQC levels, Ecology is required to identify that impairment ("303(d) listing") and develop corrective action plans to force reduction in the toxic pollutant discharge or loading of the pollutant into the impaired water body segment. These plans, referred to as total maximum daily loads (TMDLs) or water cleanup plans, establish discharge allocations and are implemented for point discharge sources through NPDES permit effluent limits and other conditions.

The effect of more stringent HHWQC will intuitively result in more NPDES permittees "causing or contributing" to a water quality standards exceedance, and/or more waterbodies being determined to be impaired, thus requiring 303(d) listing, the development of TMDL/water cleanup plans, and more stringent effluent limitations to NPDES permittees whose treated wastewater contains the listed toxic pollutant.

The study design necessarily required certain assumptions to create a "baseline effluent scenario" against which the evaluation of advanced treatment technologies could occur. The Study Partners and HDR Engineering, Inc (HDR) developed the scenario. Details of the baseline effluent scenario are presented in Table 3. The essential assumptions and rationale for selection are presented below:

- Ecology has indicated proposed HHWQC revisions will be provided in first quarter 2014. A Study Partners objective was to gain an early view on the treatment technology and cost implications. Ecology typically allows 30 or 45 days for the submission of public comments on proposed regulations. To wait for the proposed HHWQC revisions would not allow sufficient time to complete a timely technology/cost evaluation and then to share the study results in the timeframe allowed for public involvement/public comments.
- Coincident with the issuance of the proposed regulation, Ecology has a statutory obligation to provide a Significant Legislative Rule evaluation, one element of which is a "determination whether the probable benefits of the rule are greater than its probable costs, taking into account both the qualitative and quantitative benefits and costs and the specific directives of the statute being implemented" (RCW 34.05.328(1)(d)). A statutory requirement also exists to assess the impact of the proposed regulation to small businesses. The implication is that Ecology will be conducting these economic evaluations in fourth quarter 2013 and early 2014. The Study Partners wanted to have a completed technology/cost study available to share with Ecology for their significant legislative rule/small business evaluations.
- The EPA, Indian tribes located in Washington, and various special interest groups have promoted the recently promulgated state of Oregon HHWQC (2011) as the "model" for Washington's revisions of HHWQC. The Oregon HHWQC are generally based on a increased FCR of 175 grams per day (g/day) and an excess cancer risk of 10^{-6}. While the Study Partners do not concede the wisdom or appropriateness of the Oregon criteria, or the selection of scientific/technical elements used to derive those criteria, the Study Partners nevertheless have selected the Oregon HHWQC as a viable "starting point" upon which this study could be based.

- The scenario assumes generally that Oregon's HHWQC for ambient waters will, for some parameters in fact, become effluent limitations for Washington NPDES permittees. The reasoning for this important assumption includes:
    - The state of Washington's NPDES permitting program is bound by the *Friends of Pinto Creek vs. EPA* decision in the United States Court of Appeals for the Ninth Circuit (October 4, 2007). This decision held that no NPDES permits authorizing new or expanded discharges of a pollutant into a waterbody identified as impaired; i.e., listed on CWA section 303(d), for that pollutant, may be issued until such time as "existing dischargers" into the waterbody are "subject to compliance schedules designed to bring the (waterbody) into compliance with applicable water quality standards." In essence, any new/expanded discharge of a pollutant causing impairment must achieve the HHWQC at the point of discharge into the waterbody.
    - If a waterbody segment is identified as "impaired" (i.e., not achieving a HHWQC), then Ecology will eventually need to produce a TMDL or water cleanup plan. For an existing NPDES permittee with a discharge of the pollutant for which the receiving water is impaired, the logical assumption is that any waste load allocation granted to the discharger will be at or lower than the numeric HHWQC (to facilitate recovery of the waterbody to HHWQC attainment). As a practical matter, this equates to an effluent limit established at the HHWQC.
    - Acceptance of Oregon HHWQC as the baseline for technology/cost review also means acceptance of practical implementation tools used by Oregon. The HHWQC for mercury is presented as a fish tissue methyl mercury concentration. For the purposes of NPDES permitting, however, Oregon has developed an implementation management directive which states that any confirmed detection of mercury is considered to represent a "reasonable potential" to cause or contribute to a water quality standards violation of the methyl mercury criteria. The minimum quantification level for total mercury is presented as 0.005 micrograms per liter (µg/L) (5.0 nanograms per liter (ng/L)).
    - The assumed effluent limit for arsenic is taken from EPA's *National Recommended Water Quality Criteria* (2012) (inorganic, water and organisms, 10^{-6} excess cancer risk). Oregon's 2011 criterion is actually based on a less protective excess cancer risk (10^{-4}). This, however, is the result of a state-specific risk management choice and it is unclear if Washington's Department of Ecology would mimic the Oregon approach.
    - The assumption is that no mixing zone is granted such that HHWQC will effectively serve as NPDES permit effluent limits. Prior discussion on the impact of the Pinto Creek decision, 303(d) impairment and TMDL Waste Load Allocations processes, all lend support to this "no mixing zone" condition for the parameters evaluated in this study.
- Consistent with Ecology practice in the evaluation of proposed regulations, the HHWQC are assumed to be in effect for a 20-year period. It is assumed that analytical measurement technology and capability will continue to improve over this time frame and this will result in the detection and lower quantification of additional HHWQC in ambient water and NPDES dischargers. This knowledge will trigger the Pinto Creek/303(d)/TMDL issues identified above and tend to pressure NPDES permittees to evaluate and install advanced treatment technologies. The costs and efficacy of treatment for these additional HHWQC is unknown at this time.

Other elements of the Study Partners work scope, as presented to HDR, must be noted:

- The selection of four toxic pollutants and development of a baseline effluent scenario is not meant to imply that each NPDES permittee wastewater discharge will include those pollutants at the assumed concentrations. Rather, the scenario was intended to represent a composite of many NPDES permittees and to facilitate evaluation of advanced treatment technologies relying on mechanical, biological, physical, chemical processes.
- The scalability of advanced treatment technologies to wastewater treatment systems with different flow capacities, and the resulting unit costs for capital and O&M, is evaluated.
- Similarly, a sensitivity analysis on the unit costs for capital and O&M was evaluated on the assumption the adopted HHWQC (and effectively, NPDES effluent limits) are one order-of-magnitude less stringent than the Table 3 values.

Table 3: Summary of Effluent Discharge Toxics Limits

Constituent	Human Health Criteria based Limits to be met with no Mixing Zone (µg/L)	Basis for Criteria	Typical Concentration in Municipal Secondary Effluent (µg/L)	Typical Concentration in Industrial Secondary Effluent (µg/L)	Existing Washington HHC (water + org.), NTR (µg/L)
PCBs	0.0000064	Oregon Table 40 Criterion (water + organisms) at FCR of 175 grams/day	0.0005 to 0.0025[b,c,d,e,f]	0.002 to 0.005[i]	0.0017
Mercury	0.005	DEQ IMD[a]	0.003 to 0.050[h]	0.010 to 0.050[h]	0.140
Arsenic	0.018	EPA National Toxics Rule (water + organisms)[k]	0.500 to 5.0[j]	10 to 40[j]	0.018
Benzo(a)Pyrene	0.0013	Oregon Table 40 Criterion (water + organisms) at FCR of 175 grams/day	0.00028 to 0.006[b,g]	0.006 to1.9	0.0028

[a] Oregon Department of Environmental Quality (ODEQ). Internal Management Directive: Implementation of Methylmercury Criterion in NPDES Permits. January 8, 2013.
[b] Control of Toxic Chemicals in Puget Sound, Summary Technical Report for Phase 3: Loadings from POTW Discharge of Treated Wastewater, Washington Department of Ecology, Publication Number 10-10-057, December 2010.
[c] Spokane River PCB Source Assessment 2003-2007, Washington Department of Ecology, Publication No. 11-03-013, April 2011.
[d] Lower Okanogan River Basin DDT and PCBs Total Maximum Daily Load, Submittal Report, Washington Department of Ecology, Publication Number 04-10-043, October 2004.
[e] Palouse River Watershed PCB and Dieldrin Monitoring, 2007-2008, Wastewater Treatment Plants and Abandoned Landfills, Washington Department of Ecology, Publication No. 09-03-004, January 2009
[f] A Total Maximum Daily Load Evaluation for Chlorinated Pesticides and PCBs in the Walla Walla River, Washington Department of Ecology, Publication No. 04-03-032, October 2004.
[g] Removal of Polycyclic Aromatic Hydrocarbons and Heterocyclic Nitrogenous Compounds by A POTW Receiving Industrial Discharges, Melcer, H., Steel, P. and Bedford, W.K., Water Environment Federation, 66th Annual Conference and Exposition, October 1993.
[h] Data provided by Lincoln Loehr's summary of WDOE Puget Sound Loading data in emails from July 19, 2013.
[i] NCASI memo from Larry Lefleur, NCASI, to Llewellyn Matthews, NWPPA, revised June 17, 2011, summarizing available PCB monitoring data results from various sources.
[j] Professional judgment, discussed in August 6, 2013 team call.
[k] The applicable Washington Human Health Criteria cross-reference the EPA National Toxics Rule, 40 CFR 131.36. The EPA arsenic HHC is 0.018 ug/L for water and organisms.

3.0 Wastewater Characterization Description

This section describes the wastewater treatment discharge considered in this technology evaluation. Treated wastewater characteristics are described, including average and peak flow, effluent concentrations, and toxic compounds of concern.

3.1 Summary of Wastewater Characterization

A general wastewater treatment process and wastewater characteristics were developed as the common baseline to represent the existing conditions as a starting point for comparison with potential future advanced treatment technologies and improvements. A secondary treatment process with disinfection at a flow of 5 mgd as the current, baseline treatment system for existing dischargers was also developed. Typical effluent biochemical oxygen demand (BOD) and total suspended solids (TSS) were assumed between 10 to 30 mg/L from such a facility and no nutrient or toxics removal was assumed to be accomplished in the existing baseline treatment process.

3.2 Existing Wastewater Treatment Facility

The first step in the process is to characterize the existing wastewater treatment plant to be evaluated in this study. The goal is to identify the necessary technology that would need to be added to an existing treatment facility to comply with revised toxic pollutant effluent limits. Rather than evaluating the technologies and costs to upgrade multiple actual operating facilities, the Study Partners specified that a generalized municipal/industrial wastewater treatment facility would be characterized and used as the basis for developing toxic removal approaches. General characteristics of the facility's discharge are described in Table 4.

Table 4. General Wastewater Treatment Facility Characteristics

Average Annual Wastewater Flow, mgd	Maximum Month Wastewater Flow, mgd	Peak Hourly Wastewater Flow, mgd	Effluent BOD, mg/L	Effluent TSS, mg/L
5.0	6.25	15.0	10 to 30	10 to 30

mgd=million gallons per day
mg/L=milligrams per liter
BOD=biochemical oxygen demand
TSS=total suspended solids

In the development of the advanced treatment technologies presented below, the capacity of major treatment elements are generally sized to accommodate the maximum month average wastewater flow. Hydraulic elements, such as pumps and pipelines, were selected to accommodate the peak hourly wastewater flow.

The general treatment facility incorporates a baseline treatment processes including influent screening, grit removal, primary sedimentation, suspended growth biological treatment (activated sludge), secondary clarification, and disinfection using chlorine. Solids removed during primary treatment and secondary clarification are assumed to be thickened, stabilized, dewatered, and land applied to agricultural land. The biological treatment process is assumed to be activated sludge with a relatively short (less than 10-day) solids retention time. The baseline secondary treatment facility is assumed not to have processes dedicated to removing nutrients or toxics. However, some coincident removal of toxics will occur during conventional treatment.

3.3 Toxic Constituents

As described in Section 2.3, the expectation of more stringent HHWQC will eventually trigger regulatory demands for NPDES permittees to install advanced treatment technologies. The Study Group and HDR selected four specific toxic pollutants reflecting a range of toxic constituents as the basis for this study to limit the constituents and technologies to be evaluated to a manageable level.

The four toxic pollutants selected were PCBs, mercury, arsenic, and BAP, a polycyclic aromatic hydrocarbon (PAH). Mercury and arsenic are metals, and PCBs and PAHs are organic compounds. Technologies for removing metals and organic compounds are in some cases different. Key information on each of the compounds, including a description of the constituent, the significance of each constituent, proposed HHWQC, basis for the proposed criteria, typical concentration in both municipal and industrial secondary effluent, and current Washington state water quality criteria, are shown in Table 3. It is assumed that compliance with the proposed criteria in the table would need to be achieved at the “end of pipe” and Ecology would not permit a mixing zone for toxic constituents. This represents a “worst–case,” but a plausible assumption about discharge conditions.

4.0 Treatment Approaches and Costs

4.1 Summary of Treatment Approach and Costs

Two advanced treatment process options for toxics removal for further evaluation based on the characterization of removal effectiveness from the technical literature review and Study Group preferences. The two tertiary treatment options are microfiltration MF followed by either RO or GAC as an addition to an existing secondary treatment facility. Based on the literature review, it is not anticipated that any of the treatment options will be effective in reducing all of the selected pollutants to below the anticipated water quality criteria. A summary of the capital and operations and maintenance costs for tertiary treatment is provided, as well as a comparison of the adverse environmental impacts for each alternative.

4.2 Constituent Removal – Literature Review

The evaluation of treatment technologies relevant to the constituents of concern was initiated with a literature review. The literature review included a desktop search using typical web-based search engines, and search engines dedicated to technical and research journal databases. At the same time, HDR's experience with the performance of existing treatment technologies specifically related to the four constituents of concern, was used in evaluating candidate technologies. A summary of the constituents of concern and relevant treatment technologies is provided in the following literature review section.

4.2.1 Polychlorinated Biphenyls

PCBs are persistent organic pollutants that can be difficult to remove in treatment. PCB treatment in wastewater can be achieved using oxidation with peroxide, filtration, biological treatment or a combination of these technologies. There is limited information available about achieving ultra-low effluent PCB concentrations near the 0.0000064 µg/L range under consideration in the proposed rulemaking process. This review provides a summary of treatment technology options and anticipated effluent PCB concentrations.

Research on the effectiveness of ultraviolet (UV) light and peroxide on removing PCBs was tested in bench scale batch reactions (Yu, Macawile, Abella, & Gallardo 2011). The combination of UV and peroxide treatment achieved PCB removal greater than 89 percent, and in several cases exceeding 98 percent removal. The influent PCB concentration for the batch tests ranged from 50 to 100 micrograms per liter (µg/L). The final PCB concentration (for the one congener tested) was <10 µg/L (10,000 ng/L) for all tests and <5 µg/L (5,000 ng/L) for some tests. The lowest PCB concentrations in the effluent occurred at higher UV and peroxide doses.

Pilot testing was performed to determine the effectiveness of conventional activated sludge and a membrane bioreactor to remove PCBs (Bolzonella, Fatone, Pavan, & Cecchi 2010). EPA Method 1668 was used for the PCB analysis (detection limit of 0.01 ng/L per congener). Influent to the pilot system was a combination of municipal and industrial effluent. The detailed analysis was for several individual congeners. Limited testing using the Aroclor method (total PCBs) was used to compare the individual congeners and the total concentration of PCBs. Both conventional activated sludge and membrane bioreactor (MBR) systems removed PCBs. The effluent MBR concentrations ranged from <0.01 ng/L to 0.04 ng/L compared to <0.01 ng/L to 0.88 ng/L for conventional activated sludge. The pilot testing showed that increased solids retention time (SRT) and higher mixed liquor suspended solids concentrations in the MBR system led to increased removal in the liquid stream.

Bench scale studies were completed to test the effectiveness of GAC and biological activated carbon (BAC) for removing PCBs (Ghosh, Weber, Jensen, & Smith 1999). The effluent from the

Sierra Club v. EPA 18cv3472 NDCA Tier 1 ED_002061_00163679-00019

GAC system was 800 ng/L. The biological film in the BAC system was presumed to support higher PCB removal with effluent concentrations of 200 ng/L. High suspended sediment in the GAC influent can affect performance. It is recommended that filtration be installed upstream of a GAC system to reduce solids and improve effectiveness.

Based on limited available data, it appears that existing municipal secondary treatment facilities in Washington state are able to reduce effluent PCBs to the range approximately 0.10 to 1.5 ng/L. It appears that the best performing existing municipal treatment facility in Washington state with a microfiltration membrane is able to reduce effluent PCBs to the range approximately 0.00019 to 0.00063 µg/L. This is based on a very limited data set and laboratory blanks covered a range that overlapped with the effluent results (blanks 0.000058 to 0.00061 µg/L).

Addition of advanced treatment processes would be expected to enhance PCB removal rates, but the technical literature does not appear to provide definitive information for guidance. A range of expected enhanced removal rates might be assumed to vary widely from level of the reference microfiltration facility of 0.19 to 0.63 ng/L.

Summary of PCB Technologies

The literature review revealed there are viable technologies available to reduce PCBs **but no research was identified with treatment technologies capable of meeting the anticipated human health criteria based limits for PCB removal**. Based on this review, a tertiary process was selected to biologically reduce PCBs and separate the solids using tertiary filtration. Alternately, GAC was investigated as an option to reduce PCBs, although it is not proven that it will meet revised effluent limits.

4.2.2 Mercury

Mercury removal from wastewater can be achieved using precipitation, adsorption, filtration, or a combination of these technologies. There is limited information available about achieving ultra-low effluent mercury concentrations near the 5 ng/L range under consideration in the proposed rulemaking process. This review provides a summary of treatment technology options and anticipated effluent mercury concentrations.

Precipitation (and co-precipitation) involves chemical addition to form a particulate and solids separation, using sedimentation or filtration. Precipitation includes the addition of a chemical precipitant and pH adjustment to optimize the precipitation reaction. Chemicals can include metal salts (ferric chloride, ferric sulfate, ferric hydroxide, or alum), pH adjustment, lime softening, or sulfide. A common precipitant for mercury removal is sulfide, with an optimal pH between 7 and 9. The dissolved mercury is precipitated with the sulfide to form an insoluble mercury sulfide that can be removed through clarification or filtration. One disadvantage of precipitation is the generation of a mercury-laden sludge that will require dewatering and disposal. The mercury sludge may be considered a hazardous waste and require additional treatment and disposal at a hazardous waste site. The presence of other compounds, such as other metals, may reduce the effectiveness of mercury precipitation/co-precipitation. For low-level mercury treatment requirements, several treatment steps will likely be required in pursuit of very low effluent targets.

EPA compiled a summary of facilities that are using precipitation/co-precipitation for mercury treatment (EPA 2007). Three of the full-scale facilities were pumping and treating groundwater and the remaining eight facilities were full-scale wastewater treatment plants. One of the pump and treat systems used precipitation, carbon adsorption, and pH adjustment to treat groundwater to effluent concentrations of 300 ng/L.

Adsorption treatment can be used to remove inorganic mercury from water. While adsorption can be used as a primary treatment step, it is frequently used for polishing after a preliminary treatment step (EPA 2007). One disadvantage of adsorption treatment is that when the adsorbent is saturated, it either needs to be regenerated or disposed of and replaced with new adsorbent. A common adsorbent is GAC. There are several patented and proprietary adsorbents on the market for mercury removal. Adsorption effectiveness can be affected by water quality characteristics, including high solids and bacterial growth, which can cause media blinding. A constant and low flow rate to the adsorption beds increases effectiveness (EPA 2007). The optimal pH for mercury adsorption on GAC is pH 4 to 5; therefore, pH adjustment may be required.

EPA compiled a summary of facilities that are using adsorption for mercury treatment (EPA 2007). Some of the facilities use precipitation and adsorption as described above. The six summarized facilities included two groundwater treatment and four wastewater treatment facilities. The reported effluent mercury concentrations were all less than 2,000 ng/L (EPA 2007).

Membrane filtration can be used in combination with a preceding treatment step. The upstream treatment is required to precipitate soluble mercury to a particulate form that can be removed through filtration. According to the EPA summary report, ultrafiltration is used to remove high-molecular weigh contaminants and solids (EPA 2007). The treatment effectiveness can depend on the source water quality since many constituents can cause membrane fouling, decreasing the effectiveness of the filters. One case study summarized in the EPA report showed that treatment of waste from a hazardous waste combustor treated with precipitation, sedimentation, and filtration achieved effluent mercury concentrations less than the detection limit of 200 ng/L.

Bench-scale research performed at the Oak Ridge Y-12 Plant in Tennessee evaluated the effectiveness of various adsorbents for removing mercury to below the NPDES limit of 12 ng/L and the potential revised limit of 51 ng/L (Hollerman et al. 1999). Several proprietary adsorbents were tested, including carbon, polyacrylate, polystyrene, and polymer adsorption materials. The adsorbents with thiol-based active sites were the most effective. Some of the adsorbents were able to achieve effluent concentrations less than 51 ng/L but none of the adsorbents achieved effluent concentrations less than 12 ng/L.

Bench-scale and pilot-scale testing performed on refinery wastewater was completed to determine treatment technology effectiveness for meeting very low mercury levels (Urgun-Demirtas, Benda, Gillenwater, Negri, Xiong & Snyder 2012) (Urgun-Demirtas, Negri, Gillenwater, Agwu Nnanna & Yu 2013). The Great Lakes Initiative water quality criterion for mercury is less than 1.3 ng/L for municipal and industrial wastewater plants in the Great Lakes region. This research included an initial bench scale test including membrane filtration, ultrafiltration, nanofiltration, and reverse osmosis to meet the mercury water quality criterion. The nanofiltration and reverse osmosis required increased pressures for filtration and resulted in increased mercury concentrations in the permeate. Based on this information and the cost difference between the filtration technologies, a pilot-scale test was performed. The 0.04 um PVDF GE ZeeWeed 500 series membranes were tested. The 1.3 ng/L water quality criterion was met under all pilot study operating conditions. The mercury in the refinery effluent was predominantly in particulate form which was well-suited for removal using membrane filtration.

Based on available data, it appears that existing municipal treatment facilities are capable of reducing effluent mercury to near the range of the proposed HHWQC on an average basis. Average effluent mercury in the range of 1.2 to 6.6 ng/L for existing facilities with secondary treatment and enhanced treatment with cloth filters and membranes. The Spokane County plant data range is an average of 1.2 ng/L to a maximum day of 3 ng/L. Addition of

advanced treatment processes such as GAC or RO would be expected to enhance removal rates. Data from the West Basin treatment facility in California suggests that at a detection limit of 7.99 ng/L mercury is not detected in the effluent from this advanced process train. A range of expected enhanced removal rates from the advanced treatment process trains might be expected to ranged from meeting the proposed standard at 5 ng/L to lower concentrations represented by the Spokane County performance level (membrane filtration) in the range of 1 to 3 ng/L, to perhaps even lower levels with additional treatment. For municipal plants in Washington, this would suggest that effluent mercury values from the two advanced treatment process alternatives might range from 1 to 5 ng/L (0.001 to 0.005 µg/L) and perhaps substantially better, depending upon RO and GAC removals. It is important to note that industrial plants may have higher existing mercury levels and thus the effluent quality that is achievable at an industrial facility would be of lower quality.

Summary of Mercury Technologies

The literature search revealed limited research on mercury removal technologies at the revised effluent limit of 0.005 µg/L. Tertiary filtration with membrane filters or reverse osmosis showed the best ability to achieve effluent criteria less than 0.005 µg/L.

4.2.3 Arsenic

A variety of treatment technologies can be applied to capture arsenic (Table 5). Most of the information in the technical literature and from the treatment technology vendors is focused on potable water treatment for compliance with a Safe Drinking Water Act (SDWA) maximum contaminant level (MCL) of 10 µg/L. The most commonly used arsenic removal method for a wastewater application (tertiary treatment) is coagulation/ flocculation plus filtration. This method by itself could remove more than 90 to 95 percent of arsenic. Additional post-treatment through adsorption, ion exchange, or reverse osmosis is required for ultra-low arsenic limits in the 0.018 µg/L range under consideration in the proposed rulemaking process. In each case it is recommended to perform pilot-testing of each selected technology.

Table 5: Summary of Arsenic Removal Technologies[1]

Technology	Advantages	Disadvantages
Coagulation/filtration	• Simple, proven technology • Widely accepted • Moderate operator training	• pH sensitive • Potential disposal issues of backwash waste • As^{+3} and As^{+5} must be fully oxidized
Lime softening	• High level arsenic treatment • Simple operation change for existing lime softening facilities	• pH sensitive (requires post treatment adjustment) • Requires filtration • Significant sludge operation
Adsorptive media	• High As^{+5} selectivity • Effectively treats water with high total dissolved solids (TDS)	• Highly pH sensitive • Hazardous chemical use in media regeneration • High concentration SeO_4^{-2}, F^-, Cl^-, and SO_4^{-2} may limit arsenic removal

Sierra Club v. EPA 18cv3472 NDCA Tier 1 ED_002061_00163679-00022

Table 5: Summary of Arsenic Removal Technologies[1]

Technology	Advantages	Disadvantages
Ion exchange	• Low contact times • Removal of multiple anions, including arsenic, chromium, and uranium	• Requires removal of iron, manganese, sulfides, etc. to prevent fouling • Brine waste disposal
Membrane filtration	• High arsenic removal efficiency • Removal of multiple contaminants	• Reject water disposal • Poor production efficiency • Requires pretreatment

[1]Adapted from WesTech

The removal of arsenic in activated sludge is minimal (less than 20 percent) (Andrianisa et al. 2006), but biological treatment can control arsenic speciation. During aerobic biological process As (III) is oxidized to As (V). Coagulation/flocculation/filtration removal, as well as adsorption removal methods, are more effective in removal of As(V) vs. As (III). A combination of activated sludge and post-activated sludge precipitation with ferric chloride (addition to MLSS and effluent) results in a removal efficiency of greater than 95 percent. This combination could decrease As levels from 200 µg/L to less than 5 µg/L (5,000 ng/L) (Andrianisa et al. 2008) compared to the 0.018 µg/L range under consideration in the proposed rulemaking process.

Data from the West Basin facility (using MF/RO/AOP) suggests effluent performance in the range of 0.1 to 0.2 µg/L, but it could also be lower since a detection limit used there of 0.15 µg/l is an order of magnitude higher than the proposed HHWQC. A range of expected enhanced removal rates might be assumed to equivalent to that achieved at West Basin in 0.1 to 0.2 µg/L range.

Review of Specific Technologies for Arsenic Removal

Coagulation plus Settling or Filtration

Coagulation may remove more than 95 percent of arsenic through the creation of particulate metal hydroxides. Ferric sulfite is typically more efficient and applicable to most wastewater sources compared to alum. The applicability and extent of removal should be pilot-tested, since removal efficiency is highly dependent on the water constituents and water characteristics (i.e., pH, temperature, solids).

Filtration can be added after or instead of settling to increase arsenic removal. Example treatment trains with filtration are shown in Figures 1 and 2, respectively.

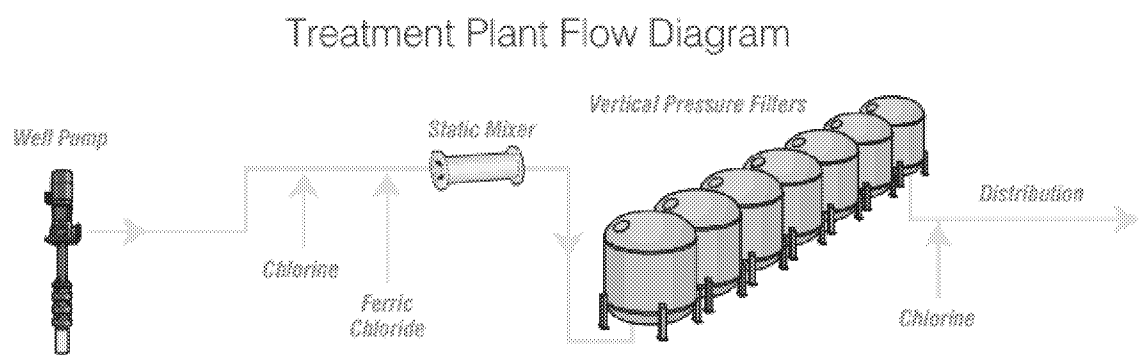

Figure 1. Water Treatment Configuration for Arsenic Removal (WesTech)

Sierra Club v. EPA 18cv3472 NDCA Tier 1 ED_002061_00163679-00023

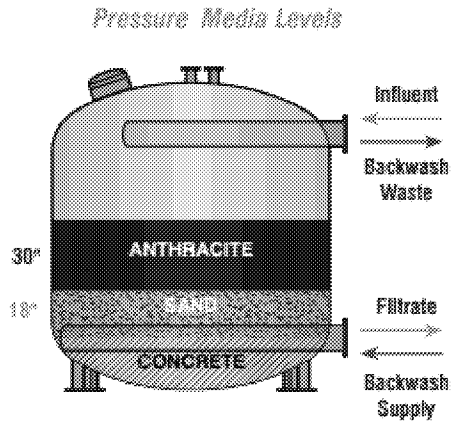

Figure 2. WesTech Pressure Filters for Arsenic Removal

One system for treatment of potable water with high levels of arsenic in Colorado (110 parts per million [ppm]) consists of enhanced coagulation followed by granular media pressure filters that include anthracite/silica sand/garnet media (WesTech). The arsenic levels were reduced to less than the drinking water MCL, which is 10 µg/L (10,000 ng/L). The plant achieves treatment by reducing the pH of the raw water to 6.8 using sulfuric acid, and then adding approximately 12 to 14 mg/L ferric sulfate. The water is filtered through 16 deep bed vertical pressure filters, the pH is elevated with hydrated lime and is subsequently chlorinated and fed into the distribution system (http://www.westech-inc.com/public/uploads/global/2011/3/Fallon%20NV%20Installation%20ReportPressureFilter.pdf).

Softening (with lime)

Removes up to 90 percent arsenic through co-precipitation, but requires pH to be higher than 10.2.

Adsorption processes

Activated alumina is considered an adsorptive media, although the chemical reaction is an exchange of arsenic ions with the surface hydroxides on the alumina. When all the surface hydroxides on the alumina have been exchanged, the media must be regenerated. Regeneration consists of backwashing, followed by sodium hydroxide, flushing with water and neutralization with a strong acid. Effective arsenic removal requires sufficient empty bed contact time. Removal efficiency can also be impacted by the water pH, with neutral or slightly acidic conditions being considered optimum. If As (III) is present, it is generally advisable to increase empty bed contact time, as As (III) is adsorbed more slowly than As (V). Alumina dissolves slowly over time due to contact with the chemicals used for regeneration. As a result, the media bed is likely to become compacted if it is not backwashed periodically.

Granular ferric hydroxide works by adsorption, but when the media is spent it cannot be regenerated and must be replaced. The life of the media depends upon pH of the raw water, the concentrations of arsenic and heavy metals, and the volume of water treated daily. Periodic backwashing is required to prevent the media bed from becoming compacted and pH may need to be adjusted if it is high, in order to extend media life. For maximum arsenic removal, filters operate in series. For less stringent removal, filters can operate in parallel.

One type of adsorption media has been developed for application to non-drinking water processes for arsenic, phosphate and for heavy metals removal by sorption (Severent Trent Bayoxide® E IN-20). This granular ferric oxide media has been used for arsenic removal from

mining and industrial wastewaters, selenium removal from refinery wastes and for phosphate polishing of municipal wastewaters. Valley Vista drinking water treatment with Bayoxide® E IN-20 media achieves removal from 31-39 µg/L (31,000-39,000 ng/L) to below 10 µg/L MCL. (http://www.severntrentservices.com/News/Successful_Drinking_Water_Treatment_in_an_Arsenic__Hot_Spot__nwMFT_452.aspx).

Another adsorptive filter media is greensand. Greensand is available in two forms: as glauconite with manganese dioxide bound ionically to the granules and as silica sand with manganese dioxide fused to the granules. Both forms operate in pressure filters and both are effective. Greensand with the silica sand core operates at higher water temperatures and higher differential pressures than does greensand with the glauconite core. Arsenic removal requires a minimum concentration of iron. If a sufficient concentration of iron is not present in the raw water, ferric chloride is added.

WesTech filters with greensand and permanganate addition for drinking water systems can reduce As from 15-25 µg/L to non-detect. Sodium hypochlorite and/or potassium permanganate are added to the raw water prior to the filters. Chemical addition may be done continuously or intermittently, depending on raw water characteristics. These chemicals oxidize the iron in the raw water and also maintain the active properties of the greensand itself. Arsenic removal is via co-precipitation with the iron.

Ion Exchange

Siemens offers a potable ion exchange (PIX) arsenic water filtration system. PIX uses ion exchange resin canisters for the removal of organic and inorganic contaminants, in surface and groundwater sources to meet drinking water standards.

Filtronics also uses ion exchange to treat arsenic. The technology allows removal for below the SWDA MCL for potable water of 10 µg/L (10,000 ng/L).

Reverse osmosis

Arsenic is effectively removed by RO when it is in oxidative state As(V) to approximately 1,000 ng/L or less (Ning 2002).

Summary of Arsenic Technologies

The current state of the technology for arsenic removal is at the point where all the processes target the SWDA MCL for arsenic in potable water. Current EPA maximum concentration level for drinking water is 10 ug/l; much higher than 0.0018 µg/L target for arsenic in this study. The majority of the methods discussed above are able to remove arsenic to either EPA maximum contaminant level or to the level of detection. The lowest detection limit of one of the EPA approved methods of arsenic measurements is 20 ng/l (0.020 µg/l) (Grosser, 2010), which is comparable to the 0.018 µg/L limit targeted in this study.

4.2.1 Polycyclic Aromatic Hydrocarbons

BAP During Biological Treatment

During wastewater treatment process, BAP tends to partition into sludge organic matter (Melcer et al. 1993). Primary and secondary processing could remove up to 60 percent of incoming PAHs and BAP in particular, mostly due to adsorption to sludge (Kindaichi et al., NA, Wayne et al. 2009). Biodegradation of BAP is expected to be very low since there are more than five benzene rings which are resistant to biological degradation. Biosurfactant addition to biological process could partially improve biodegradation, but only up to removal rates of 50 percent (Sponza et al. 2010). Existing data from municipal treatment facilities in Washington state have

influent and effluent concentrations of BAP of approximately 0.30 ng/L indicating that current secondary treatment has limited effectiveness at BAP removal.

Methods to Enhance Biological Treatment of BAP

Ozonation prior to biological treatment could potentially improve biodegradability of BAP (Zeng et al. 2000). In the case of soil remediation, ozonation before biotreatment improved biodegradation by 70 percent (Russo et al. 2012). The overall removal of BAP increased from 23 to 91 percent after exposure of water to 0.5 mg/L ozone for 30 minutes during the simultaneous treatment process and further to 100 percent following exposure to 2.5 mg/L ozone for 60 minutes during the sequential treatment mode (Yerushalmi et al. 2006). In general, to improve biodegradability of BAP, long exposure to ozone might be required (Haapea et al. 2006).

Sonication pre-treatment or electronic beam irradiation before biological treatment might also make PAHs more bioavailable for biological degradation..

Recent studies reported that a MBR is capable of removing PAHs from wastewater (Rodrigue and Reilly 2009; Gonzaleza et al. 2012). None of the studies listed the specific PAHs constituents removed.

Removal of BAP from Drinking Water

Activated Carbon

Since BAP has an affinity to particulate matter, it is removed from the drinking water sources by means of adsorption, such as granular activated carbon (EPA). Similarly, Oleszczuk et al. (2012) showed that addition of 5 percent activated carbon could remove 90 percent of PAHs from the wastewater.

Reverse Osmosis

Light (1981) (referenced by Williams, 2003) studied dilute solutions of PAHs, aromatic amines, and nitrosamines and found rejections of these compounds in reverse osmosis to be over 99 percent for polyamide membranes. Bhattacharyya et al. (1987) (referenced by Williams, 2003) investigated rejection and flux characteristics of FT30 membranes for separating various pollutants (PAHs, chlorophenols, nitrophenols) and found membrane rejections were high (>98 percent) for the organics under ionized conditions.

Summary of BAP Technologies

Current technologies show that BAP removal may be 90 percent or greater. The lowest detection limit for BAP measurements is 0.006 µg/L, which is also the assumed secondary effluent BAP concentration assumed for this study. If this assumption is accurate, it appears technologies may exist to remove BAP to a level below the proposed criteria applied as an effluent limit of 0.0013 µg/L; however, detection limits exceed this value and it is impossible to know this for certain.

4.3 Unit Processes Evaluated

Based on the results of the literature review, a wide range of technologies were evaluated for toxic constituent removal. A listing of the technologies is as follows:

- Chemically enhanced primary treatment (CEPT): this physical and chemical technology is based on the addition of a metal salt to precipitate particles prior to primary treatment, followed by sedimentation of particles in the primary clarifiers. This technology has been

Sierra Club v. EPA 18cv3472 NDCA Tier 1 ED_002061_00163679-00026

shown to effectively remove arsenic but there is little data supporting the claims. As a result, the chemical facilities are listed as optional.

- Activated sludge treatment (with a short SRT of approximately 8 days or less): this biological technology is commonly referred to as secondary treatment. It relies on converting dissolved organics into solids using biomass. Having a short SRT is effective at removing degradable organics referred to as BOD compounds for meeting existing discharge limits. Dissolved constituents with a high affinity to adsorb to biomass (e.g., metals, high molecular weight organics, and others) will be better removed compared to smaller molecular weight organics and recalcitrant compounds which will have minimal removal at a short SRT.
- Enhanced activated sludge treatment (with a long SRT of approximately 8 days or more): this technology builds on secondary treatment by providing a longer SRT, which enhances sorption and biodegradation. The improved performance is based on having more biomass coupled with a more diverse biomass community, especially nitrifiers, which have been shown to assist in removal of some of the more recalcitrant constituents not removed with a shorter SRT (e.g., lower molecular weight PAHs). There is little or no data available on the effectiveness of this treatment for removing BAP.

  Additional benefits associated with having a longer SRT are as follows:

  - Lower BOD/TSS discharge load to receiving water
  - Improved water quality and benefit to downstream users
  - Lower effluent nutrient concentrations which reduce algal growth potential in receiving waters
  - Reduced receiving water dissolved oxygen demand due to ammonia removal
  - Reduced ammonia discharge, which is toxic to aquatic species
  - Improved water quality for habitat, especially as it relates to biodiversity and eutrophication
  - Secondary clarifier effluent more conditioned for filtration and disinfection
  - Greater process stability from the anaerobic/anoxic zones serving as biological selectors
- Coagulation/Flocculation and Filtration: this two-stage chemical and physical process relies on the addition of a metal salt to precipitate particles in the first stage, followed by the physical removal of particles in filtration. This technology lends itself to constituents prone to precipitation (e.g., arsenic).
- Lime Softening: this chemical process relies on increasing the pH as a means to either volatilize dissolved constituents or inactivate pathogens. Given that none of the constituents being studied are expected to volatilize, this technology was not carried forward.
- Adsorptive Media: this physical and chemical process adsorbs constituents to a combination of media and/or biomass/chemicals on the media. There are several types of media, with the most proven and common being GAC. GAC can also serve as a coarse roughing filter.
- Ion Exchange: this chemical technology exchanges targeted constituents with a resin. This technology is common with water softeners where the hard divalent cations are

exchanged for monovalent cations to soften the water. Recently, resins that target arsenic and mercury removal include activated alumina and granular ferric hydroxides have been developed. The resin needs to be cleaned and regenerated, which produces a waste slurry that requires subsequent treatment and disposal. As a result, ion exchange was not considered for further.

- Membrane Filtration: This physical treatment relies on the removal of particles larger than the membranes pore size. There are several different membrane pore sizes as categorized below.
    - Microfiltration (MF): nominal pore size range of typically between 0.1 to 1 micron. This pore size targets particles, both inert and biological, and bacteria. If placed in series with coagulation/flocculation upstream, dissolved constituents precipitated out of solution and bacteria can be removed by the MF membrane.
    - Ultrafiltration (UF): nominal pore size range of typically between 0.01 to 0.1 micron. This pore size targets those solids removed with MF (particles and bacteria) plus viruses and some colloidal material. If placed in series with coagulation/flocculation upstream, dissolved constituents precipitated out of solution can be removed by the UF membrane.
    - Nanofiltration (NF): nominal pore size range of typically between 0.001 to 0.010 micron. This pore size targets those removed with UF (particles, bacteria, viruses) plus colloidal material. If placed in series with coagulation/flocculation upstream, dissolved constituents precipitated out of solution can be removed by the NF membrane.
- MBR (with a long SRT): this technology builds on secondary treatment whereby the membrane (microfiltration) replaces the secondary clarifier for solids separation. As a result, the footprint is smaller, the mixed liquor suspended solids concentration can be increased to about 5,000 – 10,000 mg/L, and the physical space required for the facility reduced when compared to conventional activated sludge. As with the activated sludge option operated at a longer SRT, the sorption and biodegradation of organic compounds are enhanced in the MBR process. The improved performance is based on having more biomass coupled with a more diverse biomass community, especially nitrifiers which have been shown to assist in removal of persistent dissolved compounds (e.g., some PAHs). There is little or no data available on effectiveness at removing BAP. Although a proven technology, MBRs were not carried further in this technology review since they are less likely to be selected as a retrofit for an existing activated sludge (with a short SRT) secondary treatment facility. The MBR was considered to represent a treatment process approach more likely to be selected for a new, greenfield treatment facility. Retrofits to existing secondary treatment facilities can accomplish similar process enhancement by extending the SRT in the activated sludge process followed by the addition of tertiary membrane filtration units.
- RO: This physical treatment method relies on the use of sufficient pressure to osmotically displace water across the membrane surface while simultaneously rejecting most salts. RO is very effective at removing material smaller than the size ranges for the membrane filtration list above, as well as salts and other organic compounds. As a result, it is expected to be more effective than filtration and MBR methods described above at removing dissolved constituents. Although effective, RO produces a brine reject water that must be managed and disposed.

- Advanced Oxidation Processes (AOPs): this broad term considers all chemical and physical technologies that create strong hydroxyl-radicals. Examples of AOPs include Fenton's oxidation, ozonation, ultraviolet/hydrogen peroxide (UV-H2O2), and others. The radicals produced are rapid and highly reactive at breaking down recalcitrant compounds. Although effective at removing many complex compounds such as those evaluated in this study, AOPs does not typically have as many installations as membranes and activated carbon technologies. As a result, AOPs were not carried forward.

Based on the technical literature review discussed above, a summary of estimated contaminant removal rated by unit treatment process is presented in Table 6.

Table 6. Contaminants Removal Breakdown by Unit Process

Unit Process	Arsenic	BAP	Mercury	Polychlorinated Biphenyls
Activated Sludge Short SRT	No removal	Partial Removal by partitioning		80% removal; effluent <0.88 ng/L
Activated Sludge Long SRT	No removal	Partial removal by partitioning and/or partially biodegradation; MBR could potentially remove most of BAP		>90% removal with a membrane bioreactor, <0.04 ng/L (includes membrane filtration)
Membrane Filtration (MF)	More than 90 % removal (rejection of bound arsenic)	No removal	<1.3 ng/L	>90% removal with a membrane bioreactor, <0.04 ng/L (includes membrane filtration)
Reverse Osmosis (RO)	More than 90% removal (rejection of bound arsenic and removal of soluble arsenic)	More than 98% removal		
Granular Activated Carbon (GAC)	No removal, removal only when carbon is impregnated with iron	90 % removal	<300 ng/L (precipitation and carbon adsorption) <51 ng/L (GAC)	<800 ng/L Likely requires upstream filtration
Disinfection	--	--	--	--

4.4 Unit Processes Selected

The key conclusion from the literature review was that there is limited, to no evidence, that existing treatment technologies are capable of simultaneously meeting all four of the revised discharge limits for the toxics under consideration. Advanced treatment using RO or GAC is expected to provide the best overall removal of the constituents of concern. It is unclear whether these advanced technologies are able to meet revised effluent limits, however these processes may achieve the best effluent quality of the technologies reviewed. This limitation in the findings is based on a lack of an extensive dataset on treatment removal effectiveness in the technical literature for the constituents of interest at the low levels relevant to the proposed criteria, which

approach the limits of reliable removal performance for the technologies. As Table 6 highlights, certain unit processes are capable of removing a portion, or all, of the removal requirements for each technology. The removal performance for each constituent will vary from facility to facility and require a site-specific, detailed evaluation because the proposed criteria are such low concentrations. In some cases, a facility may only have elevated concentrations of a single constituent of concern identified in this study. In other cases, a discharger may have elevated concentrations of the four constituents identified in this study, as well as others not identified in this study but subject to revised water quality criteria. This effort is intended to describe a planning level concept of what treatment processes are required to comply with discharge limits for all four constituents. Based on the literature review of unit processes above, two different treatment trains were developed for the analysis that are compared against a baseline of secondary treatment as follows:

- Baseline: represents conventional secondary treatment that is most commonly employed nationwide at wastewater treatment plants. A distinguishing feature for this treatment is the short solids residence time (SRT) (<8 days) is intended for removal of BOD with minimal removal for the toxic constituents of concern.
- Advanced Treatment – MF/RO: builds on baseline with the implementation of a longer SRT (>8 days) and the addition of MF and RO. The longer SRT not only removes BOD, but it also has the capacity to remove nutrients and a portion of the constituents of concern. This alternative requires a RO brine management strategy which will be discussed in sub-sections below.
- Advanced Treatment – MF/GAC: this alternative provides a different approach to advanced treatment with MF/RO by using GAC and avoiding the RO reject brine water management concern. Similar to the MF/RO process, this alternative has the longer SRT (>8 days) with the capacity to remove BOD, nutrients, and a portion of the toxic constituents of concern. As a result, the decision was made to develop costs for both advanced treatment options.

A description of each alternative is provided in Table 7. The process flowsheets for each alternative are presented in Figure 3 to Figure 5.

Table 7. Unit Processes Description for Each Alternative

Unit Process	Baseline	Advanced Treatment – MF/RO	Advanced Treatment - GAC
Influent Flow	5 mgd	5 mgd	5 mgd
Chemically Enhanced Primary Treatment (CEPT); Optional	--	• Metal salt addition (alum) upstream of primaries	• Metal salt addition (alum) upstream of primaries
Activated Sludge	• Hydraulic Residence Time (HRT): 6 hrs • Short Solids Residence Time (SRT): <8 days	• Hydraulic Residence Time (HRT): 12 hrs (Requires more tankage than the Baseline) • Long Solids Residence Time (SRT): >8 days (Requires more tankage than the Baseline)	• Hydraulic Residence Time (HRT): 12 hrs (Requires more tankage than the Baseline) • Long Solids Residence Time (SRT): >8 days (Requires more tankage than the Baseline)
Secondary Clarifiers	Hydraulically Limited	Solids Loading Limited (Larger clarifiers than Baseline)	Solids Loading Limited (Larger clarifiers than Baseline)
Microfiltration (MF)	--	Membrane Filtration to Remove Particles and Bacteria	Membrane Filtration to Remove Particles and Bacteria
Reverse Osmosis (RO)	--	Treat 50% of the Flow by RO to Remove Metals and Dissolved Constituents. Sending a portion of flow through the RO and blending it with the balance of plant flows ensures a stable non-corrosive, non-toxic discharge.	--
Reverse Osmosis Brine Reject Mgmt	--	Several Options (All Energy or Land Intensive)	--
Granular Activated Carbon	--	--	Removes Dissolved Constituents
Disinfection	Not shown to remove any of the constituents	Not shown to remove any of the constituents	Not shown to remove any of the constituents

4.4.1 Baseline Treatment Process

A flowsheet of the baseline treatment process is provided in Figure 3. The baseline treatment process assumes the current method of treatment commonly employed by dischargers. For this process, water enters the headworks and undergoes primary treatment, followed by conventional activated sludge (short SRT) and disinfection. The solids wasted in the activated

sludge process are thickened, followed by mixing with primary solids prior to entering the anaerobic digestion process for solids stabilization. The digested biosolids are dewatered to produce a cake and hauled off-site. Since the exact process for each interested facility in Washington is unique, this baseline treatment process was used to establish the baseline capital and O&M costs. The baseline costs will be compared against the advanced treatment alternatives to illustrate the magnitude of the increased costs and environmental impacts.

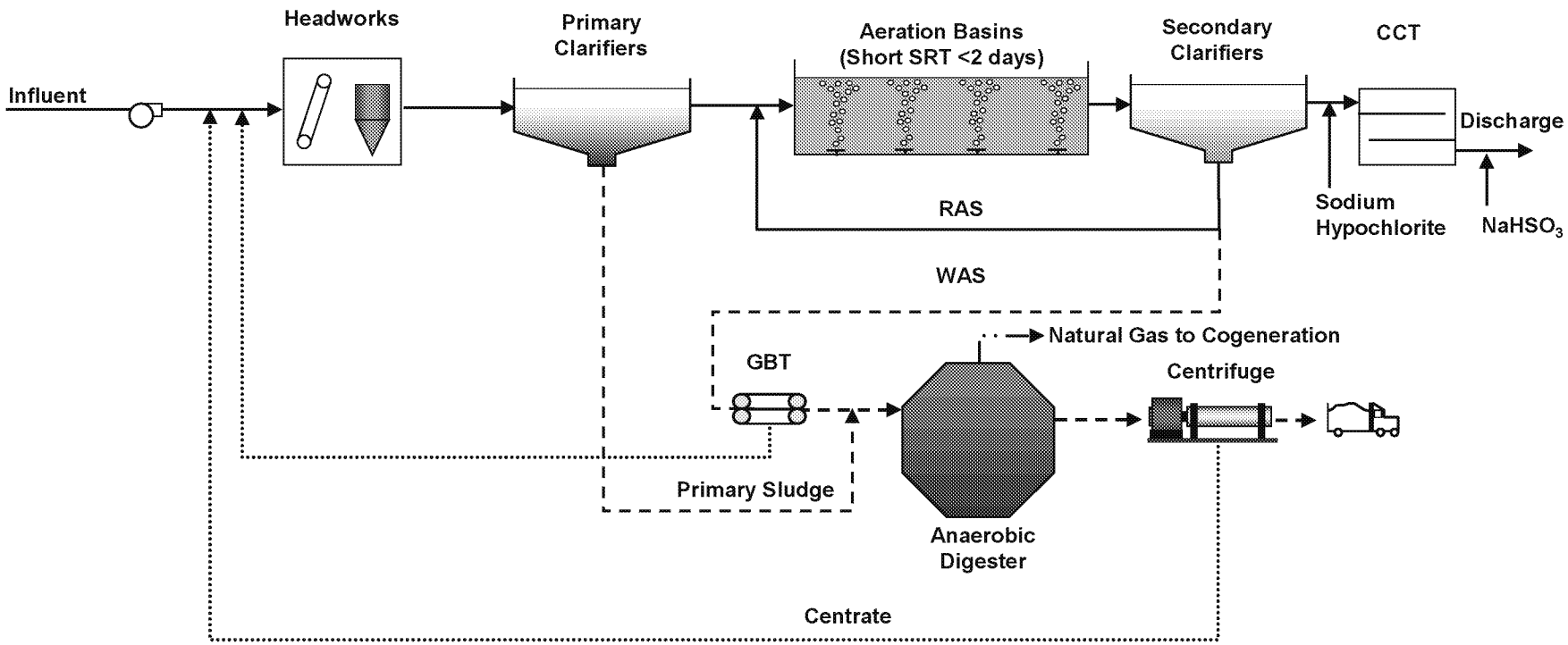

Figure 3. Baseline Flowsheet – Conventional Secondary Treatment

Sierra Club v. EPA 18cv3472 NDCA Tier 1 ED_002061_00163679-00033

4.4.2 Advanced Treatment – MF/RO Alternative

A flowsheet of the advanced treatment – MF/RO alternative is provided in Figure 4. This alternative builds on the baseline secondary treatment facility, whereby the SRT is increased in the activated sludge process, and MF and RO are added prior to disinfection. The solids treatment train does not change with respect to the baseline. Additionally, a brine management strategy must be considered.

The RO process concentrates contaminants into a smaller volume reject stream. Disposing of the RO reject stream can be a problem because of the potentially large volume of water involved and the concentration of contaminants contained in the brine. For reference, a 5 mgd process wastewater flow might result in 1 mgd of brine reject requiring further management. The primary treatment/handling options for RO reject are as follows:

- Zero liquid discharge
- Surface water discharge
- Ocean discharge
- Haul and discharge to coastal location for ocean discharge
- Sewer discharge
- Deep well injection
- Evaporate in a pond
- Solar pond concentrator

Many of the RO brine reject management options above result in returning the dissolved solids to a "water of the state" such as surface water, groundwater, or marine waters. Past rulings in Washington State have indicated that once pollutants are removed from during treatment they are not to be re-introduced to a water of the state. As a result, technologies with this means for disposal were not considered viable options for management of RO reject water in Washington.

Zero Liquid Discharge

Zero liquid discharge (ZLD) is a treatment process that produces a little or no liquid brine discharge but rather a dried residual salt material. This process improves the water recovery of the RO system by reducing the volume of brine that must be treated and disposed of in some manner. ZLD options include intermediate treatment, thermal-based technologies, pressure driven membrane technologies, electric potential driven membrane technologies, and other alternative technologies.

Summary

There are many techniques which can be used to manage reject brine water associated with RO treatment. The appropriate alternative is primarily governed by geographic and local constraints. A comparison of the various brine management methods and potential costs are provided in Table 8.

Table 8. Brine Disposal Method Relative Cost Comparison

Disposal Method	Description	Relative Capital Cost	Relative O&M Cost	Comments
Zero Liquid Discharge (ZLD)	Further concentrates brine reject for further downstream processing	High	High	This option is preferred as an intermediate step. This rationale is based on the reduction in volume to handle following ZLD. For example, RO reject stream volume is reduced on the order of 50-90%.
Surface Water Discharge	Brine discharge directly to surface water. Requires an NPDES permit.	Lowest	Lowest	Both capital and O&M costs heavily dependent on the distance from brine generation point to discharge. Not an option for nutrient removal.
Ocean Discharge	Discharge through a deep ocean outfall.	Medium	Low	Capital cost depends on location and availability of existing deep water outfall.
Sewer Discharge	Discharge to an existing sewer pipeline for treatment at a wastewater treatment plant.	Low	Low	Both capital and O&M costs heavily dependent on the brine generation point to discharge distance. Higher cost than surface water discharge due to ongoing sewer connection charge. Not an option for wastewater treatment.
Deep Well Injection	Brine is pumped underground to an area that is isolated from drinking water aquifers.	Medium	Medium	Technically sophisticated discharge and monitoring wells required. O&M cost highly variable based on injection pumping energy.
Evaporation Ponds	Large, lined ponds are filled with brine. The water evaporates and a concentrated salt remains.	Low – High	Low	Capital cost highly dependent on the amount and cost of land.
Salinity Gradient Solar Ponds (SGSP)	SGSPs harness solar power from pond to power an evaporative unit.	Low – High	Lowest	Same as evaporation ponds plus added cost of heat exchanger and pumps. Lower O&M cost due to electricity production.
Advanced Thermal Evaporation	Requires a two-step process consisting of a brine concentrator followed by crystallizer	High	Highest	Extremely small footprint, but the energy from H_2O removal is by far the most energy intensive unless waste heat is used.

Of the listed options, ZLD was considered for this analysis as the most viable approach to RO reject water management. An evaporation pond was used following ZLD. The strength in this combination is ZLD reduces the brine reject volume to treat, which in turn reduces the required evaporation pond footprint. It is important to recognize that the greenhouse gas (GHG) emissions vary widely for the eight brine management options listed above based on energy and chemical intensity.

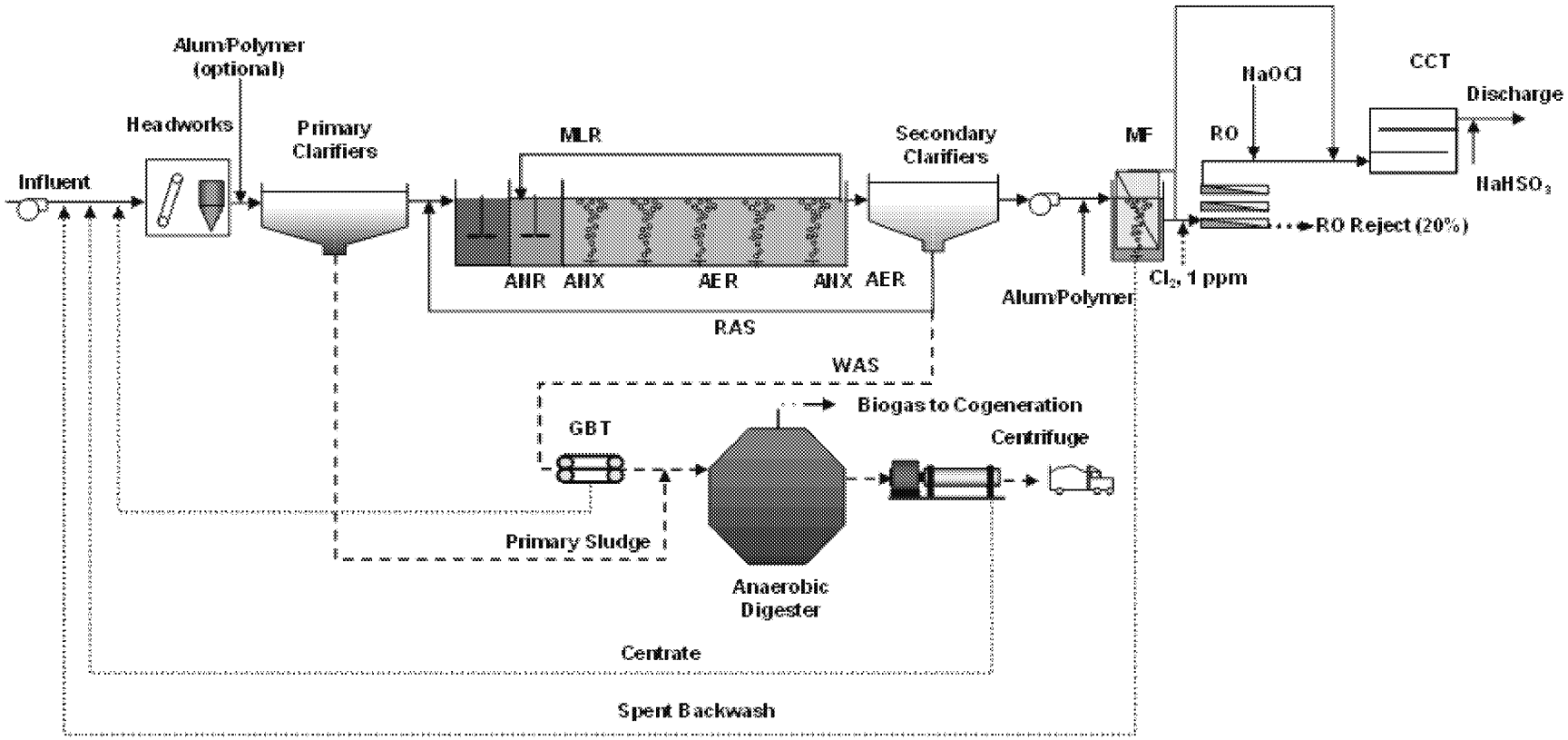

Figure 4. Advanced Treatment Flowsheet – Tertiary Microfiltration and Reverse Osmosis

Sierra Club v. EPA 18cv3472 NDCA Tier 1 ED_002061_00163679-00037

4.4.3 Advanced Treatment – MF/GAC Alternative

A flowsheet of the advanced treatment – MF/GAC alternative is provided in Figure 5. Following the MF technology, a GAC contactor and media are required.

This alternative was developed as an option that does not require a brine management technology (e.g., ZLD) for comparison to the MF/RO advanced treatment alternative. However, this treatment alternative does require that the GAC be regenerated. A baseline secondary treatment facility can be retrofitted for MF/GAC. If an existing treatment facility has an extended aeration lagoon, the secondary effluent can be fed to the MF/GAC. The longer SRT in the extended aeration lagoon provides all the benefits associated with the long SRT in an activated sludge plant as previously stated:

- Lower BOD/TSS discharge load
- Higher removal of recalcitrant constituents and heavy metals
- Improved water quality and benefit to downstream users
- Less downstream algal growth
- Reduced receiving water dissolved oxygen demand due to ammonia removal
- Reduced ammonia discharge loads, which is toxic to several aquatic species
- Improved water quality for habitat, especially as it relates to biodiversity and eutrophication
- Secondary clarifier effluent more conditioned for filtration and disinfection
- Greater process stability from the anaerobic/anoxic zones serving as a selector

If an existing treatment facility employs a high rate activated sludge process (short SRT) similar to the baseline, it is recommended that the activated sludge process SRT be increased prior to the MF/GAC unit processes. The longer SRT upstream of the MF is preferred to enhance the membrane flux rate, reduce membrane biofouling, increase membrane life, and reduce the chemicals needed for membrane cleaning.

The key technical and operational challenges associated with the tertiary add-on membrane filtration units are as follows:

- The membrane filtration technology is a proven and reliable technology. With over 30 years of experience, it has made the transition in recent years from an emerging technology to a proven and reliable technology.
- Membrane durability dependent on feed water quality. The water quality is individual facility specific.
- Membranes are sensitive to particles, so upstream screening is critical. The newer generations of membranes have technical specifications that require a particular screen size.
- Membrane area requirements based on peak flows as water must pass through the membrane pores. Additionally, membranes struggle with variable hydraulic loading. Flow equalization upstream can greatly reduce the required membrane surface area and provide uniform membrane loading.
- Membrane tanks can exacerbate any foam related issues from the upstream biological process. Foam entrapment in the membrane tank from the upstream

process can reduce membrane filtration capacity and in turn result in a plant-wide foam problem.

- Reliable access to the membrane modules is key to operation and maintenance. Once PLC is functionary properly, overall maintenance requirements for sustained operation of the system are relatively modest.
- The membranes go through frequent membrane relaxing or back pulse and a periodic deep chemical clean in place (CIP) process.
- Sizing of membrane filtration facilities governed by hydraulic flux. Municipal wastewaters have flux values that range from about 20 to 40 gallons per square foot per day (gfd) under average annual conditions. The flux associated with industrial applications is wastewater specific.

Following the MF is the activated carbon facilities. There are two kinds of activated carbon used in treating water: powdered activated carbon (PAC) and GAC. PAC is finely-ground, loose carbon that is added to water, mixed for a short period of time, and removed. GAC is larger than PAC, is generally used in beds or tanks that permit higher adsorption and easier process control than PAC allows, and is replaced periodically. PAC is not selective, and therefore, will adsorb all active organic substances making it an impractical solution for a wastewater treatment plant. As a result, GAC was considered for this analysis. The type of GAC (e.g., bituminous and subbituminous coal, wood, walnut shells, lignite or peat), gradation, and adsorption capacity are determined by the size of the largest molecule/ contaminant that is being filtered (AWWA, 1990).

As water flows through the carbon bed, contaminants are captured by the surfaces of the pores until the carbon is no longer able to adsorb new molecules. The concentration of the contaminant in the treated effluent starts to increase. Once the contaminant concentration in the treated water reaches an unacceptable level (called the breakthrough concentration), the carbon is considered "spent" and must be replaced by virgin or reactivated GAC.

The capacity of spent GAC can be restored by thermal reactivation. Some systems have the ability to regenerate GAC on-site, but in general, small systems haul away the spent GAC for off-site regeneration (EPA 1993). For this study, off-site regeneration was assumed.

The basic facilities and their potential unit processes included in this chapter are as follows:

- GAC supply and delivery
- Influent pumping
  - Low head feed pumping
  - High head feed pumping (assumed for this study as we have low limits so require high beds)
- Contactors and backwash facilities
  - Custom gravity GAC contactor
  - Pre-engineered pressure GAC contactor (Used for this study)
  - Backwash pumping
- GAC transport facilities
  - Slurry pumps
  - Eductors (Used for this study)
- Storage facilities

  - Steel tanks
  - Concrete tanks (Used for this study; larger plants would typically select concrete tanks)
- Spent carbon regeneration
  - On-site GAC regeneration
  - Off-Site GAC regeneration

Following the MF is the GAC facility. The GAC contactor provides about a 12-min hydraulic residence time for average annual conditions. The GAC media must be regenerated about twice per year in a furnace. The constituents sorbed to the GAC media are removed during the regeneration process. A typical design has full redundancy and additional storage tankage for spent and virgin GAC. Facilities that use GAC need to decide whether they will regenerate GAC on-site or off-site. Due to challenges associated with receiving air emission permits for new furnaces, it was assumed that off-site regeneration would be evaluated.

The key technical and operational challenges associated with the tertiary add-on

GAC units are as follows:

- Nearest vendor to acquire virgin GAC – How frequently can they deliver virgin GAC and what are the hauling costs?
- Contactor selection is typically based on unit cost and flow variation. The concrete contactor is typically more cost effective at higher flows so it was used for this evaluation. The pre-engineered pressure contactor can handle a wider range of flows than a concrete contactor. Additionally, a pressure system requires little maintenance as they are essentially automated
- Periodical contactor backwashing is critical for maintaining the desired hydraulics and control biological growth
- Eductors are preferred over slurry pumps because they have fewer mechanical components. Additionally, the pump with eductors is not in contact with the carbon, which reduces wear.
- Off-site GAC regeneration seems more likely due to the challenges with obtaining an air emissions permit.

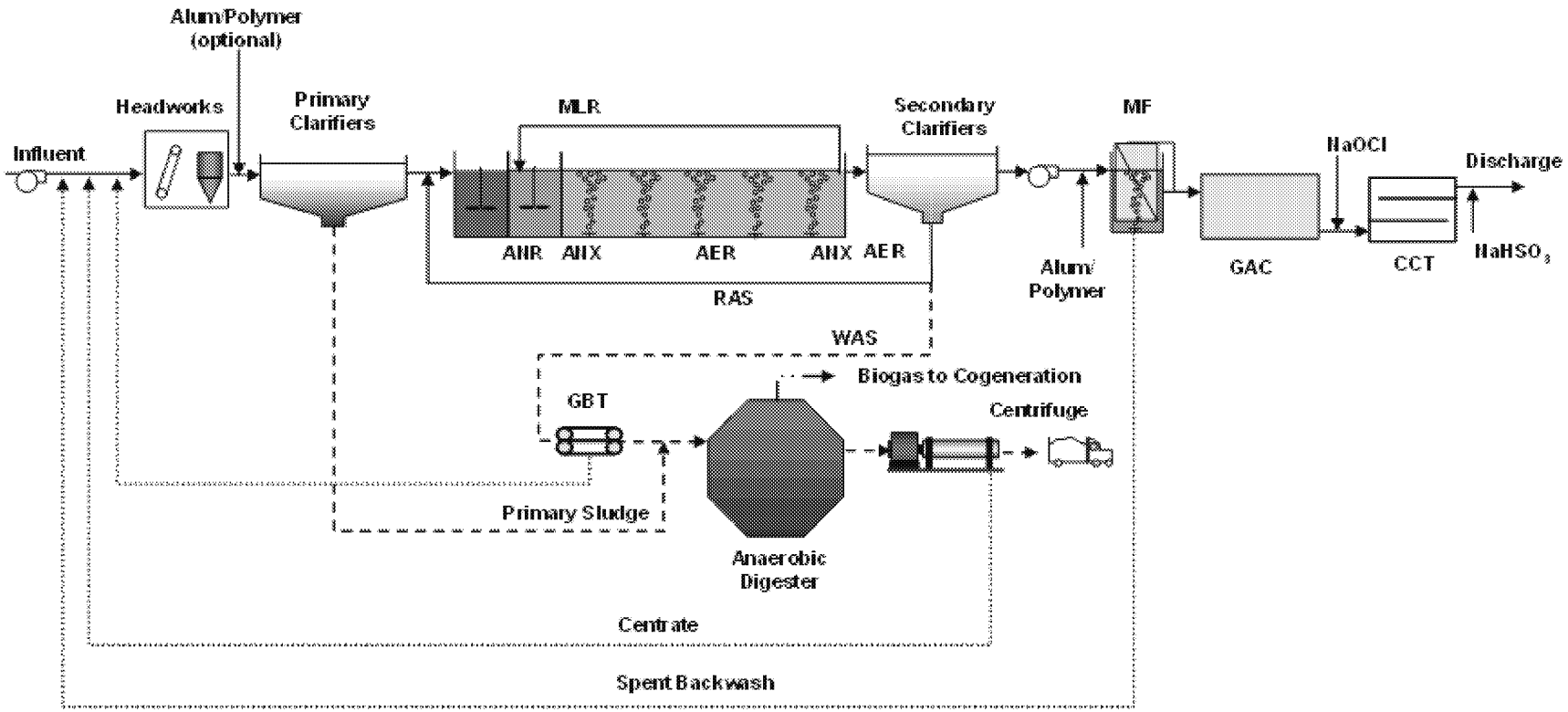

Figure 5. Advanced Treatment Flowsheet – Tertiary Microfiltration and Granular Activated Carbon

4.5 Steady-State Mass Balance

HDR used its steady-state mass balance program to calculate the flows and loads within the candidate advanced treatment processes as a means to size facilities. The design of wastewater treatment facilities are generally governed by steady-state mass balances. For a steady-state mass balance, the conservation of mass is calculated throughout the entire wastewater treatment facility for defined inputs. Dynamic mass balance programs exist for designing wastewater facilities, but for a planning level study such as this, a steady state mass balance program is adequate. A dynamic program is generally used for detailed design and is site-specific with associated requirements for more detailed wastewater characterization.

The set of model equations used to perform a steady-state mass balance are referred to as the model. The model equations provide a mathematical description of various wastewater treatment processes, such as an activated sludge process, that can be used to predict unit performance. The program relies on equations for each unit process to determine the flow, load, and concentration entering and leaving each unit process.

An example of how the model calculates the flow, load, and concentration for primary clarifiers is provided below. The steady-state mass balance equation for primary clarifiers has a single input and two outputs as shown in the simplified Figure 6. The primary clarifier feed can exit the primary clarifiers as either effluent or sludge. Solids not removed across the primaries leave as primary effluent, whereas solids captured leave as primary sludge. Scum is not accounted for.

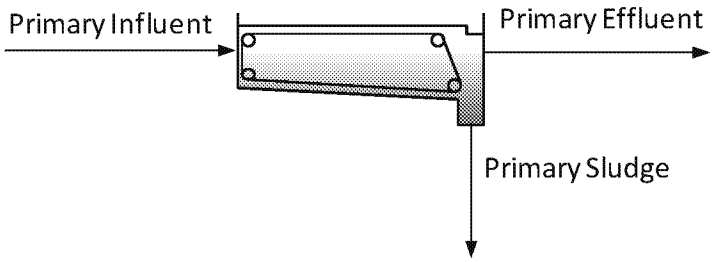

Figure 6. Primary Clarifier Inputs/Outputs

The mass balance calculation requires the following input:

- Solids removal percentage across the primaries (based on average industry accepted performance)
- Primary solids thickness (i.e., percent solids) (based on average industry accepted performance)

The steady-state mass balance program provides a reasonable first estimate for the process performance, and an accurate measure of the flows and mass balances at various points throughout the plant. The mass balance results were used for sizing the facility needs for each alternative. A listing of the unit process sizing criterion for each unit process is provided in Appendix A. By listing the unit process sizing criteria, a third-party user could redo the analysis and end up with comparable results. The key sizing criteria that differ between the baseline and treatment alternatives are as follows:

- Aeration basin mixed liquor is greater for the advanced treatment alternatives which in turn requires a larger volume
- The secondary clarifiers are sized based on hydraulic loading for the baseline versus solids loading for the advanced treatment alternatives

- The MF/GAC and MF/RO sizing is only required for the respective advanced treatment alternatives.

4.6 Adverse Environmental Impacts Associated with Advanced Treatment Technologies

The transition from the baseline (conventional secondary treatment) to either advanced treatment alternatives has some environmental impacts that merit consideration, including the following:

- Land area for additional system components (which for constrained facility sites, may necessitate land acquisition and encroachment into neighboring properties with associated issues and challenges, etc.).
- Increased energy use and atmospheric emissions of greenhouse gases and criteria air contaminants associated with power generation to meet new pumping requirements across the membrane filter systems (MF and RO) and GAC.
- Increased chemical demand associated with membrane filters (MF and RO).
- Energy and atmospheric emissions associated with granulated charcoal regeneration.
- RO brine reject disposal. The zero liquid discharge systems are energy intensive energy and increase atmospheric emissions as a consequence of the electrical power generation required for removing water content from brine reject.
- Increase in sludge generation while transitioning from the baseline to the advanced treatment alternatives. There will be additional sludge captured with the chemical addition to the primaries and membrane filters (MF and RO). Additionally, the GAC units will capture more solids.
- Benefits to receiving water quality by transitioning from a short SRT (<2 days) in the baseline to a long SRT (>8 days) for the advanced treatment alternatives (as previously stated):
    - Lower BOD/TSS discharge load
    - Higher removal of recalcitrant constituents and heavy metals
    - Improved water quality and benefit to downstream users
    - Reduced nutrient loadings to receiving waters and lower algal growth potential
    - Reduced receiving water dissolved oxygen demand due to ammonia removal
    - Reduced ammonia discharge loads, which is toxic to aquatic species
    - Improved water quality for habitat, especially as it relates to biodiversity and eutrophication
    - Secondary clarifier effluent better conditioned for subsequent filtration and disinfection
    - Greater process stability from the anaerobic/anoxic zones serving as a biological selectors

HDR calculated GHG emissions for the baseline and advanced treatment alternatives. The use of GHG emissions is a tool to normalize the role of energy, chemicals, biosolids hauling, and fugitive emissions (e.g., methane) in a single unit. The mass balance results were used to quantify energy demand and the corresponding GHG emissions for each alterative. Energy

demand was estimated from preliminary process calculations. A listing of the energy demand for each process stream, the daily energy demand, and the unit energy demand is provided in Table 9. The advanced treatment options range from 2.3 to 4.1 times greater than the baseline. This large increase in energy demand is attributed to the energy required to pass water through the membrane barriers and/or the granular activated carbon. Additionally, there is energy required to handle the constituents removed as either regenerating the GAC or handling the RO brine reject water. This additional energy required to treat the removed constituents is presented in Table 9.

Table 9. Energy Breakdown for Each Alternative (5 mgd design flow)

Parameter	Units	Baseline	Advanced Treatment – MF/GAC	Advanced Treatment – MF/RO
Daily Liquid Stream Energy Demand	MWh/d	11.6	23.8	40.8
Daily Solids Stream Energy Demand	MWh/d	-1.6	-1.1	-1.1
Daily Energy Demand	MWh/d	10.0	22.7	39.7
Unit Energy Demand	kWh/MG Treated	2,000	4,500	7,900

MWh/d = megawatt hours per day
kWh/MG = kilowatt hours per million gallons

Details on the assumptions used to convert between energy demand, chemical demand and production, as well as biologically-mediated gases (i.e., CH4 and N2O) and GHG emissions are provided in Appendix B.

A plot of the GHG emissions for each alternative is shown in Figure 7. The GHG emissions increase from the baseline to the two advanced treatment alternatives. The GHG emissions increase about 50 percent with respect to baseline when MF/GAC is used and the GHG emissions increase over 100 percent with respect to baseline with the MF/RO advanced treatment alternative.

The MF/GAC energy demand would be larger if GAC regeneration was performed on-site. The GHG emissions do not include the energy or air emissions that result from off-site GAC regeneration. Only the hauling associated with moving spent GAC is included. The energy associated with operating the furnace would exceed the GHG emissions from hauling spent GAC.

The zero liquid discharge in the MF/RO alternative alone is comparable to the Baseline. This contribution to increased GHG emissions by zero liquid discharge brine system highlights the importance of the challenges associated with managing brine reject.

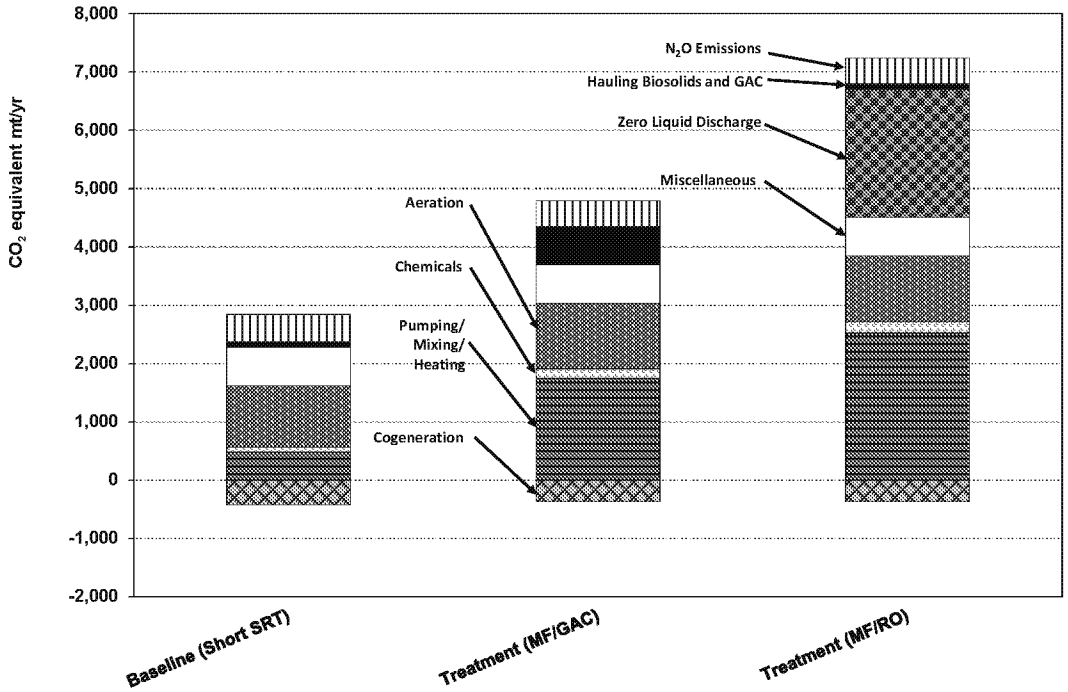

Figure 7. Greenhouse Gas Emissions for Each Alternative

The use of GHG emissions as a measure of sustainability does not constitute a complete comparison between the baseline and advanced treatment alternatives. Rather, it is one metric that captures the impacts of energy, chemical demand and production, as well as biologically-mediated gases (i.e., CH_4 and N_2O). The other environmental impacts of advanced treatment summarized in the list above should also be considered in decision making beyond cost analysis.

4.7 Costs

Total project costs along with the operations and maintenance costs were developed for each advanced treatment alternative for a comparison with baseline secondary treatment.

4.7.1 Approach

The cost estimates presented in this report are planning level opinions of probable construction costs for a nominal 5 mgd treatment plant design flow representing a typical facility without site specific details about local wastewater characteristics, physical site constraints, existing infrastructure, etc. The cost estimates are based on wastewater industry cost references, technical studies, actual project cost histories, and professional experience. The costs presented in this report are considered planning level estimates. A more detailed development of the advanced treatment process alternatives and site specific information would be required to further refine the cost estimates. Commonly this is accomplished in the preliminary design phase of project development for specific facilities following planning.

The cost opinion includes a range of costs associated with the level of detail used in this analysis. Cost opinions based on preliminary engineering can be expected to follow the Association for the Advancement of Cost Engineering (AACE International) Recommended Practice No. 17R-97 Cost Estimate Classification System estimate Class 4. A Class 4 estimate is based upon a 5 to 10 percent project definition and has an expected accuracy range of -30 to +50 percent and typical end usage of budget authorization and cost control. It is considered an

Sierra Club v. EPA 18cv3472 NDCA Tier 1 ED_002061_00163679-00045

"order-of-magnitude estimate." The life-cycle costs were prepared using the net present value (NPV) method.

The cost associated for each new unit process is based on a unit variable, such as required footprint, volume, demand (e.g., lb O_2/hr), and others. This approach is consistent with the approach developed for the EPA document titled "Estimating Water Treatment Costs: Volume 2-Cost Curves Applicable to 1 to 200 mgd Treatment Plants" dated August 1979. The approach has been updated since 1979 to account for inflation and competition, but the philosophy for estimating costs for unit processes has not changed. For example, the aeration system sizing/cost is governed by the maximum month airflow demand. Additionally, the cost associated constructing an aeration basin is based on the volume. The cost considers economies of scale.

The O&M cost estimates were calculated from preliminary process calculations. The operations cost includes energy and chemical demand. For example, a chemical dose was assumed based on industry accepted dosing rates and the corresponding annual chemical cost for that particular chemical was accounted for. The maintenance values only considered replacement equipment, specifically membrane replacement for the Advanced Treatment Alternatives.

4.7.2 Unit Cost Values

The life-cycle cost evaluation was based on using the economic assumptions shown in Table 10. The chemical costs were based on actual values from other projects. To perform detailed cost evaluations per industry, each selected technology would need to be laid out on their respective site plan based on the location of the existing piping, channels, and other necessary facilities.

Table 10. Economic Evaluation Variables

Item	Value
Nominal Discount Rate	5%
Inflation Rate:	
General	3.5%
Labor	3.5%
Energy	3.5%
Chemical	3.5%
Base Year	2013
Project Life	25 years
Energy	$0.06/kWh
Natural Gas	$0.60/therm
Chemicals:	
Alum	$1.1/gal
Polymer	$1.5/gal
Hypochlorite	$1.5/gal
Salt	$0.125/lb
Antiscalant	$12.5/lb
Acid	$0.35/lb
Deionized Water	$3.75/1,000 gal

Table 10. Economic Evaluation Variables

Item	Value
Hauling	
Biosolids Hauling Distance	100 miles (one way)
Biosolids Truck Volume	6,000 gal/truck
Biosolids Truck Hauling	$250/truck trip
GAC Regeneration Hauling Distance	250 miles (round trip)
GAC Regeneration Truck Volume	$20,000 lb GAC/truck
GAC Regeneration Truck Hauling	Included in cost of Virgin GAC

4.7.3 Net Present Value of Total Project Costs and Operations and Maintenance Cost in 2013 Dollars

An estimate of the net present value for the baseline treatment process and the incremental cost to implement the advanced treatment alternatives is shown in Table 11. The cost for the existing baseline treatment process was estimated based on new construction for the entire conventional secondary treatment process (Figure 3). The incremental cost to expand from existing baseline secondary treatment to advanced treatment was calculated by taking the difference between the baseline and the advanced treatment alternatives. These values serve as a benchmark for understanding the prospective cost for constructing advanced treatment at the planning level of process development.

Table 11. Treatment Technology Total Project Costs in 2013 Dollars for a 5 mgd Facility

Alternative	Total Construction Cost, 2013 dollars ($ Million)	O&M Net Present Value, 2013 dollars ($ Million) *	Total Net Present Value, 2013 dollars ($ Million)	NPV Unit Cost, 2013 dollars ($/gpd)
Baseline (Conventional Secondary Treatment) *	59 - 127	5 - 11	65 – 138	13 - 28
Advanced Treatment – MF/RO **	108 - 231	31 - 67	139 - 298	28 - 60
Advanced Treatment – MF/GAC	131 - 280	50 - 108	181 - 388	36 - 78
Incremental Increase to Advanced Treatment MF/RO	48 - 104	26 - 56	75 - 160	15 - 32
Incremental Increase to Advanced Treatment MF/GAC	71 - 153	45 - 97	117 - 250	23 - 50

* The additional cost to increase the SRT to upwards of 30-days is about $12 - 20 million additional dollars in total project cost for a 5 mgd design flow

** Assumes zero liquid discharge for RO brine management, followed by evaporation ponds. Other options are available as listed in Section 4.4.2.

Sierra Club v. EPA 18cv3472 NDCA Tier 1 ED_002061_00163679-00047

4.7.4 Unit Cost Assessment

Costs presented above are based on a treatment capacity of 5.0 mgd, however, existing treatment facilities range dramatically across Washington in size and flow treated. Table 11 indicates that the unit capital cost for baseline conventional secondary treatment for 5.0 mgd ranges between $13 to 28 per gallon per day of treatment capacity. The unit cost for the advanced treatment alternatives increases the range from the low $20s to upper $70s on a per-gallon per-day of capacity. The increase in cost for the advanced treatment alternatives is discussed in the sub-sections below.

Advanced Treatment MF/RO

The advanced treatment MF/RO alternative has a total present worth unit cost range of $28 to $60 million in per gallon per day of capacity. This translates to an incremental cost increase with respect to the baseline of $15 to $32 million dollars in per gallon per day treatment capacity. The key differences in cost between the baseline and the advanced treatment MF/RO are as follows:

- Larger aeration basins than the baseline to account for the longer SRT (<8 days versus >8 days).
- Additional pumping stations to pass water through the membrane facilities (MF and RO). These are based on peak flows.
- Membrane facilities (MF and RO; equipment, tanks chemical feed facilities, pumping, etc.) and replacement membrane equipment.
- Additional energy and chemical demand to operate the membrane facilities (MF and RO) and GAC.
- Zero liquid discharge facilities to further concentrate the brine reject.
- Zero liquid discharge facilities are energy/chemically intensive and they require membrane replacement every few years due to the brine reject water quality.
- An evaporation pond to handle the brine reject that has undergone further concentration by zero liquid discharge.

The advanced treatment MF/RO assumes that 100 percent of the flow is treated by MF, followed by 50 percent of the flow treated with RO. Sending a portion of flow through the RO and blending it with the balance of plant flows ensures a stable water to discharge. The RO brine reject (about 1.0 mgd) undergoes ZLD pre-treatment that further concentrates the brine reject to about 0.1-0.5 mgd. The recovery for both RO and ZLD processes is highly dependent on water quality (e.g., silicate levels).

ZLD technologies are effective at concentrating brine reject, but it comes at a substantial cost ($17.5 per gallon per day of ZLD treatment capacity of brine reject). The zero liquid discharge estimate was similar in approach to the demonstration study by Burbano and Brandhuber (2012) for La Junta, Colorado. The ability to further concentrate brine reject was critical from a management standpoint. Although 8 different options were presented for managing brine reject in Section 4.4.2, none of them is an attractive approach for handling brine reject. ZLD provides a viable pre-treatment step that requires subsequent downstream treatment. Evaporation ponds following ZLD were used for this study. Without ZLD, the footprint would be 3-5 times greater.

Roughly 30 acres of evaporation ponds are required (25-year life-span) to handle the ZLD concentrate. This area requirement accounts for the moist climate of AWB members. However, precipitation throughout Washington is highly variable which can greatly influence evaporation

Sierra Club v. EPA 18cv3472 NDCA Tier 1 ED_002061_00163679-00048

pond footprint. The approach for costing the evaporation pond was in accordance with Mickley et al. (2006) and the cost was about $2.6 million.

Recent discussions with an industry installing evaporation ponds revealed that they will use mechanical evaporators to enhance evaporation rates. The use of mechanical evaporators was not included in this study, but merits consideration if a facility is performing a preliminary design that involves evaporation ponds. The mechanical evaporators have both a capital costs and annual energy costs.

Advanced Treatment MF/GAC

The advanced treatment MF/GAC alternative has a total present worth unit cost range of $36 to $78 million in per gallon per day capacity. This translates to an incremental cost increase with respect to the baseline of $23 to $50 million dollars on a per gallon per day of treatment capacity basis. The key differences in cost between the baseline and the advanced treatment MF/GAC are as follows:

- Larger aeration basins than the baseline to account for the longer SRT (<8 days versus >8 days).
- Additional pumping stations to pass water through the MF membrane and GAC facilities. These are based on peak flows.
- GAC facilities (equipment, contact tanks, pumping, GAC media, etc.)
- Additional energy to feed and backwash the GAC facilities.
- GAC media replacement was the largest contributor of any of the costs.
- Additional hauling and fees to regenerate GAC off-site.

The advanced treatment MF/GAC assumes that 100 percent of the flow is treated by MF, followed by 100 percent of the flow treated with GAC. The GAC technology is an established technology. The costing approach was in accordance with EPA guidelines developed in 1998.

The critical issue while costing the GAC technology is whether a GAC vendor/regeneration facility is located within the region. On-site regeneration is an established technology with a furnace.

However, there are several concerns as listed in Section 4.4.3:

- Ability to obtain an air emissions permit
- Additional equipment to operate and maintain
- Energy and air emissions to operate a furnace on-site
- Operational planning to ensure that furnace is operating 90-95 percent of the time. Otherwise, operations is constantly starting/stopping the furnace which is energy intensive and deleterious to equipment
- If not operated properly, the facility has the potential to create hazardous/toxic waste to be disposed

If located within a couple hundred miles, off-site regeneration is preferred. For this study, off-site regeneration was assumed with a 250-mile (one-way) distance to the nearest vendor that can provide virgin GAC and a regeneration facility.

Incremental Treatment Cost

The difference in costs between the baseline and the advanced treatment alternatives is listed in Table 11. The incremental cost to retrofit the baseline facility to the advanced treatment was calculated by taking the difference between the two alternatives. These values should serve as a planning level benchmark for understanding the potential cost for retrofitting a particular facility. The incremental cost is unique to a particular facility. Several reasons for the wide range in cost in retrofitting a baseline facility to advanced treatment are summarized as follows:

- Physical plant site constraints. A particular treatment technology may or may not fit within the constrained particular plant site. A more expensive technology solution that is more compact may be required. Alternately, land acquisition may be necessary to enlarge a plant site to allow the addition of advanced treatment facilities. An example of the former is stacking treatment processes vertically to account for footprint constraints. This is an additional financial burden that would not be captured in the incremental costs presented in Table 11.
- Yard piping. Site specific conditions may prevent the most efficient layout and piping arrangement for an individual facility. This could lead to additional piping and pumping to convey the wastewater through the plant. This is an additional financial burden that would not be captured in the incremental costs presented in Table 11.
- Pumping stations. Each facility has unique hydraulic challenges that might require additional pumping stations not captured in this planning level analysis. This is an additional financial burden that would not be captured in the incremental costs presented in Table 11.

A cursory unit cost assessment was completed to evaluate how costs would compare for facilities with lower (0.5 mgd) and higher capacity (25 mgd). Capital costs were also evaluated for a 0.5 mgd and 25 mgd facility using non-linear scaling equations with scaling exponents. The unit capital cost for baseline conventional secondary treatment for 0.5 mgd and 25 mgd is approximately $44 and $10 per gallon per day of treatment capacity, respectively. The incremental unit costs to implement an advanced treatment retrofit for 0.5 mgd would range between $30 to $96 per gallon per day of treatment capacity and would be site and discharger specific. The incremental unit costs to implement an advanced treatment retrofit for 25 mgd would range between $10 to 35 per gallon per day of treatment capacity and would be site and discharger specific. The larger flow, 25 mgd, is not as expensive on a per gallon per day of treatment capacity. This discrepancy for the 0.5 and 25 mgd cost per gallon per day of treatment capacity is attributed to economies of scale. Cost curve comparisons (potential total construction cost and total net present value) for the baseline and the two tertiary treatment options (MF/RO and MF/GAC) are shown in Figure 8 and Figure 9 between the flows of 0.5 and 25 mgd.

Table 12. Treatment Technology Total Project Costs in 2013 Dollars for a 0.5 mgd Facility and a 25 mgd Facility

Alternative	Total Construction Cost, 2013 dollars ($ Million)	O&M Net Present Value, 2013 dollars ($ Million) *	Total Net Present Value, 2013 dollars ($ Million)	NPV Unit Cost, 2013 dollars ($/gpd)
0.5 mgd:				
Baseline (Conventional Secondary Treatment)	15 - 32	0.5 - 1.1	15 - 33	31 - 66
Advanced Treatment – MF/RO **	27 - 58	3.2 - 6.8	30 - 65	60 - 130
Advanced Treatment – MF/GAC	33 - 70	5 - 10.8	38 - 81	76 - 162
Incremental Increase to Advanced Treatment MF/RO	12 - 26	2.7 - 5.7	15 - 32	30 - 64
Incremental Increase to Advanced Treatment MF/GAC	18 - 38	4.6 - 9.8	22 - 48	45 - 96
25 mgd:				
Baseline (Conventional Secondary Treatment)	156 - 335	25 - 54	182 - 389	7 - 16
Advanced Treatment – MF/RO **	283 - 606	157 - 336	440 - 942	18 - 38
Advanced Treatment – MF/GAC	343 - 735	252 - 541	595 - 1276	24 - 51
Incremental Increase to Advanced Treatment MF/RO	127 - 272	131 - 281	258 - 553	10 - 22
Incremental Increase to Advanced Treatment MF/GAC	187 - 401	226.9 - 486	414 - 887	17 - 35

* Does not include the cost for labor.
** Assumes zero liquid discharge for RO brine management, followed by evaporation ponds. Other options are available as listed in Section 4.4.2.

Sierra Club v. EPA 18cv3472 NDCA Tier 1 ED_002061_00163679-00051

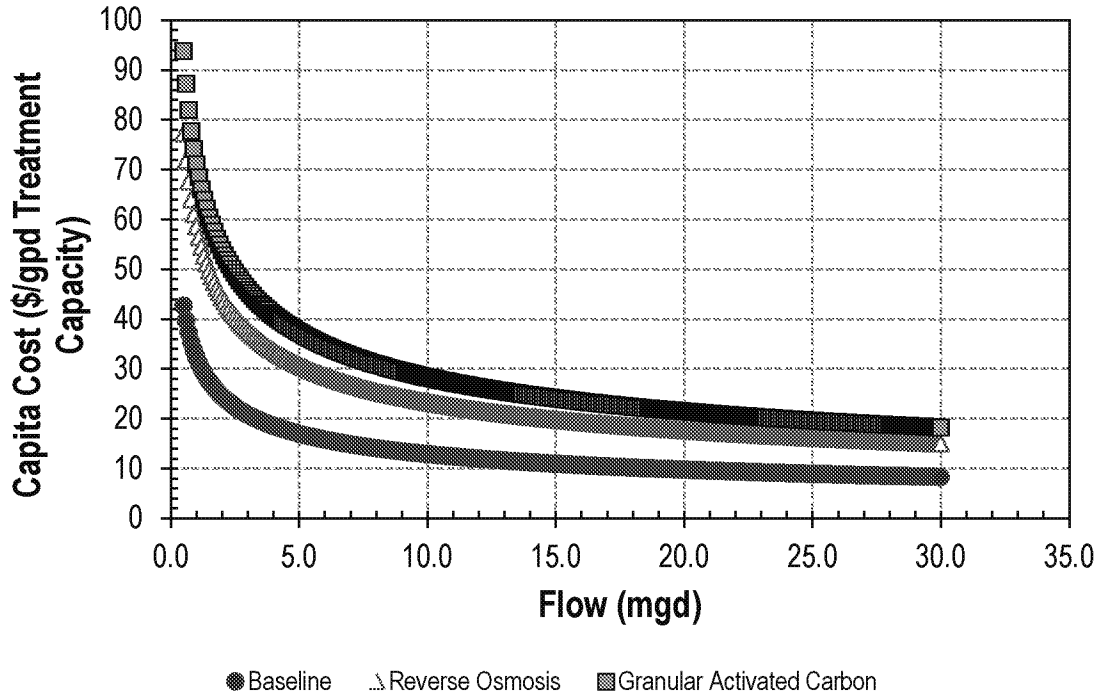

Figure 8: Capital Cost Curve Comparison for Baseline Treatment, MF/RO, and MF/GAC

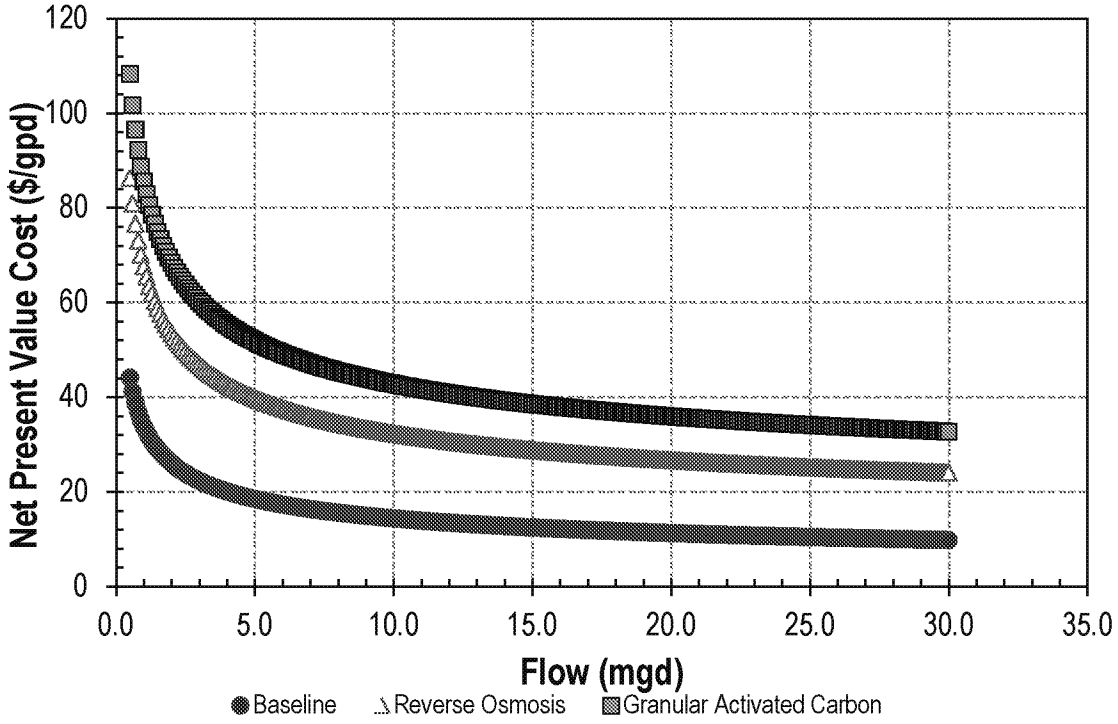

Figure 9: NPV Cost Curve Comparison for Baseline Treatment, MF/RO, and MF/GAC

4.8 Pollutant Mass Removal

An estimate of the projected load removal for the four constituents of concern was developed and is presented in Table 13. The current secondary effluent and advanced treatment effluent data is based on the only available data to HDR and is from municipal treatment plant facilities. Data is not available for advanced treatment facilities such as MF/RO or MF/GAC. Due to this lack of data, advanced treatment using MF/RO or MF/GAC was assumed to remove an additional zero to 90 percent of the constituents presented resulting in the range presented in Table 13. It is critical to note these estimates are based on limited data and are presented here simply for calculating mass removals. Current secondary effluent for industrial facilities would likely be greater than the data presented here and as a result, the projected effluent quality for industrial facilities would likely be higher as well. Based on the limited actual data from municipal treatment facilities, Table 13 indicates that mercury and BAP effluent limits may potentially be met using advanced treatment at facilities with similar existing secondary effluent quality.

Table 13. Pollutant Mass Removal by Contaminant for a 5 mgd Facility

Component	PCBs	Mercury	Arsenic	BAP
Required HHWQC based Effluent Quality (µg/L)	0.0000064	0.005	0.018	0.0013
Current Secondary Effluent Concentration (µg/L)*	0.0015	0.025	7.5	0.00031
Projected Effluent Quality (µg/L) from Advanced Treatment (MF/RO or MF/GAC)*	0.000041 – 0.00041	0.00012 – 0.0012	0.38 – 3.8	0.000029 - 0.00029
Mass Removed (mg/d)**	21 - 28	451 - 471	71,000 – 135,000	0.4 – 5.0
Mass Removed (lb/d)**	0.000045 – 0.000061	0.00099 – 0.0010	0.16 – 0.30	0.0000010 – 0.0000012

* Based on or estimated for actual treatment plant data from municipal facilities. Data sets are limited and current secondary effluent for industrial facilities would likely be greater than the data presented here.
** 1 lb = 454,000 mg

Unit costs were developed based on required mass removal from a 5 mgd facility for each of the four constituents of concern to reduce discharges from current secondary effluent quality to the assumed required effluent quality (HHWQC). It important to note that this study concludes it is unclear if existing technology can meet the required effluent quality, however, the information presented in Table 14 assumes HHWQC would be met for developing unit costs. The unit costs are expressed as dollars in NPV (over a 25 year period) per pound of constituent removed over the same 25 year period using advanced treatment with MF/RO. The current secondary effluent quality data presented are based on typical secondary effluent quality expected for a municipal/industrial discharger. Table 14 suggests unit costs are most significant in meeting the PCB, mercury, and PAH required effluent quality.

Table 14. Unit Cost by Contaminant for a 5 mgd Facility Implementing Advanced Treatment using MF/RO

Component	PCBs	Mercury	Arsenic	PAHs
Required HHWQC based Effluent Quality (µg/L)	0.0000064	0.005	0.018	0.0013
Current Secondary Effluent Concentration (µg/L)*	0.002	0.025	7.5	0.006
Total Mass Removed (lbs) over 25 year Period	0.76	7.6	2,800	1.8
Unit Cost (NPV per total mass removed in pounds over 25 years)	$290,000,000	$29,000,000	$77,000	$120,000,000

*Derived from data presented in Table 3.
**Based on assumed 25-year NPV of $219,000,000 (average of the range presented in Table 10) and advanced treatment using MF/RO.

4.9 Sensitivity Analysis

The ability of dischargers to meet a HHWQC one order of magnitude less stringent (than HHWQC presented in Table 3 and used in this report) was considered. The same advanced treatment technologies using MF/RO or MF/GAC would still be applied to meet revised effluent quality one order-of-magnitude less stringent despite still not being able to meet less stringent effluent limits. As a result, this less stringent effluent quality would not impact costs. Based on available data, it appears the mercury and PAH limits would be met at a less stringent HHWQC. PCB effluent quality could potentially be met if advanced treatment with RO or GAC performed at the upper range of their projected treatment efficiency. It does not appear the less stingent arsenic HHWQC would be met with advanced treatment. It is important to note that a discharger's ability to meet these less stringent limits depends on existing secondary effluent characteristics and is facility specific. Facilities with higher secondary effluent constituent concentrations will have greater difficulty meeting HHWQC.

Sierra Club v. EPA 18cv3472 NDCA Tier 1 ED_002061_00163679-00054

5.0 Summary and Conclusions

This study evaluated treatment technologies potentially capable of meeting revised effluent discharge limits associated with revised HHWQC. HDR completed a literature review of potential technologies and engineering review of their capabilities to evaluate and screen treatment methods for meeting revised effluent limits for four constituents of concern: arsenic, BAP, mercury, and PCBs. HDR selected two alternatives to compare against a baseline, including enhanced secondary treatment, enhanced secondary treatment with MF/RO, and enhanced secondary treatment with MF/GAC. HDR developed capital costs, operating costs, and a NPV for each alternative, including the incremental cost to implement from an existing secondary treatment facility.

The following conclusions can be made from this study.

- Revised HHWQC based on state of Oregon HHWQC (2001) and EPA "National Recommended Water Quality Criteria" will result in very low water quality criteria for toxic constituents.
- There are limited "proven" technologies available for dischargers to meet required effluent quality limits that would be derived from revised HHWQC.
    - Current secondary wastewater treatment facilities provide high degrees of removal for toxic constituents; however, they will not be capable of compliance with water quality-based NPDES permit effluent limits derived from revised HHWQC.
    - Advanced treatment technologies have been investigated and candidate process trains have been conceptualized for toxics removal.
        - Advanced wastewater treatment technologies may enhance toxics removal rates, however they will not be capable of compliance with HHWQC based effluent limits for PCBs. The lowest levels achieved based on the literature review were between <0.00001 and 0.00004 µg/L, as compared to a HHWQC of 0.0000064 µg/L.
        - Based on very limited performance data for arsenic and mercury from advanced treatment information available in the technical literature, compliance with revised criteria may or may not be possible, depending upon site specific circumstances.
            - Compliance with a HHWQC for arsenic of 0.018 µg/L appears unlikely. Most treatment technology performance information available in the literature is based on drinking water treatment applications targeting a much higher SDWA MCL of 10 µg/L.
            - Compliance with a HHWQC for mercury of 0.005 µg/L appears to be potentially attainable on an average basis but perhaps not if effluent limits are structured on a maximum monthly, weekly or daily basis. Some secondary treatment facilities attain average effluent mercury levels of 0.009 to 0.066 µg/L. Some treatment facilities with effluent filters attain average effluent mercury levels of 0.002 to 0.010 µg/L. Additional advanced treatment processes are expected to enhance these removal rates, but little mercury performance data is available for a definitive assessment.

        - Little information is available to assess the potential for advanced technologies to comply with revised benzo(a)pyrene criteria.
    - Some technologies may be effective at treating identified constituents of concern to meet revised limits while others may not. It is therefore even more challenging to identify a technology that can meet all constituent limits simultaneously.
    - A HHWQC that is one order-of-magnitude less stringent could likely be met for mercury and PAHs however it appears PCB and arsenic limits would not be met.
- Advanced treatment processes incur significant capital and operating costs.
    - Advanced treatment process to remove additional arsenic, benzo(a)pyrene, mercury, and PCBs would combine enhancements to secondary treatment with microfiltration membranes, reverse osmosis, and granular activated carbon and increase the estimated capital cost of treatment from $17 to $29 in dollars per gallon per day of capacity (based on a 5.0 mgd facility).
    - The annual operation and maintenance costs for the advanced treatment process train will be substantially higher (approximately $5 million - $15 million increase for a 5.0 mgd capacity facility) than the current secondary treatment level.
- Implementation of additional treatment will result in additional collateral impacts.
    - High energy consumption.
    - Increased greenhouse gas emissions.
    - Increase in solids production from chemical addition to the primaries. Additionally, the membrane and GAC facilities will capture more solids that require handling.
- It appears advanced treatment technology alone cannot meet all revised water quality limits and implementation tools are necessary for discharger compliance.
    - Implementation flexibility will be necessary to reconcile the difference between the capabilities of treatment processes and the potential for HHWQC driven water quality based effluent limits to be lower than attainable with technology

6.0 References

Ahn, J.-H., Kim, S, Park, H., Rahm, B., Pagilla, K., Chandran, K. 2010. N2O emissions from activated sludge processes, 2008-2009: Results of a national surveying program in the United States. Environ. Sci. Technol., 44(12):4505-4511.

Andrianisa, H.,A., Ito, A., Sasaki, A., Aizawa, J., and Umita, T. 2008. Biotransformation of arsenic species by activated sludge and removal of bio-oxidised arsenate from wastewater by coagulation with ferric chloride. Water Research, 42(19), pp. 4809-4817

Andrianisa, H.,A., Ito, A., Sasaki, A., Ikeda, M., Aizawa, J., and Umita, T. 2006. Behaviour of arsenic species in batch activated sludge process: biotransformation and removal. Water Science and Technology, 54(8), pp. 121-128.

Burbano, A and Brandhuber, P. (2012) Demonstration of membrane zero liquid discharge for drinking water systems. Water Environment Research Federation (WERF) Report WERF5T10.

California Air Resources Board, ICLEI, California Climate Action Registry, The Climate Registry. 2008. Local Government Operations Protocol. For the quantification and reporting of greenhouse gas emissions inventories, Version 1.1.

Chung, B., Cho, J., Song, C., and Park, B. Degradation of naturally contaminated polycyclic aromatic hydrocarbons in municipal sewage sludge by electron beam irradiation. Bulletin of Environmental Contamination and Toxicology, 81(1), pp. 7-11.

CRITFC (Columbia River Inter-Tribal Fish Commission). 1994. A fish consumption survey of the Umatilla, Nez Perce, Yakama and Warm Springs Tribes of the Columbia River Basin. Columbia River Inter-Tribal Fish Commission Report reference #94-03, Portland, Oregon.

Eckenfelder, W.W., Industrial Water Pollution Control, 2nd ed. (New York: McGraw-Hill, 1989).

González, D., Ruiz, L.M., Garralón, G., Plaza, F., Arévalo, J., Parada, J., Péreza, J., Morenoa, B., and Ángel Gómez, M. 2012. Wastewater polycyclic aromatic hydrocarbons removal by membrane bioreactor. Desalination and Water Treatment, 42, pp. 94–99

Grosser, J. 2010. The Challenge: Measure Arsenic in Drinking Water. White paper.

Haapeaa, P., and Tuhkanen, T. 2006. Integrated treatment of PAH contaminated soil by soil washing, ozonation and biological treatment . Journal of Hazardous Materials,136(21), pp. 244–250

Intergovernmental Panel on Climate Change. 2006. 2006 IPCC Guidelines for National Greenhouse Gas Inventories. Prepared by the National Greenhouse Gas Inventories Programme, Eggleston, S., Buendia, L., Miwa, K., Ngara, T., Tanabe, K. (eds.) Published: IGES, Japan.

LaGrega, M.D., Buckingham P.L. and Evans J.C., Hazardous Waste Management, 1st ed. (New York: McGraw-Hill, 1994).

Melcer, H., Steel, P., and Bedford, W.K. 1993. Removal of polycyclic aromatic hydrocarbons and hetercyclic nitrogenous compounds by a POTW receiving industrial discharges. Proceeding of WEFTEC 1993.

Mickley and Associates. 2006. Membrane Concentrate Disposal: Practices and Regulations. U.S. Department of the Interior, Bureau of Reclamation, Contract No. 98-FC-81-0054.

National Council for Air and Stream Improvement, Inc. (NCASI). 1998. Technical and economic feasibility assessment of metals reduction in pulp and paper mill wastewaters. Technical Bulletin No. 756. Research Triangle Park, NC: National Council for Air and Stream Improvement, Inc., 1998.

National Council for Air and Stream Improvement, Inc. (NCASI). 2004. Investigation of advanced techniques to remove low-level mercury from pulp and paper mill effluents. Technical Bulletin No. 870. Research Triangle Park, NC: National Council for Air and Stream Improvement, Inc.

National Council for Air and Stream Improvement, Inc. (NCASI). 2000. Memorandum: Information on PCB Water Quality Criteria, Analytical Methods, and Measurement Results for Point Sources and Ambient Waters. Technical Bulletin No. 807. Research Triangle Park, NC: National Council for Air and Stream Improvement, Inc.

National Council for Air and Stream Improvement, Inc. (NCASI). 2000. Bench scale testing of processes to reduce metals concentrations in pulp and paper mill wastewaters. Technical Bulletin No. 807. Research Triangle Park, NC: National Council for Air and Stream Improvement, Inc.

Ning, R. 2002. Arsenic removal by reverse osmosis. Desalination, 143 (3), pp. 237–241

Oleszczuk, P., Hale, S. E., Lehmann, J., and Cornelissen, G. 2012. Activated carbon and biochar amendments decrease pore-water concentrations of polycyclic aromatic hydrocarbons (PAHs) in sewage sludge. Bioresource Technology, 111, pp. 84–91

Oregon Department of Environmental Quality. 2011. Table 40: Human Health Water Quality Criteria for Toxic Pollutants, Effective October 17, 2011. Available on-line at: http://www.deq.state.or.us/wq/standards/toxics.htm

Owen, W.F. 1982. Energy in Wastewater Treatment. Prentice-Hall, Englewood Cliffs, New Jersey.

Parker, W., Monteith, H., and Pileggi, V. 2009. Estimation of Biodegradation and Liquid-Solid Partitioning Coefficients for Complex PAHs in Wastewater Treatment. Proceedings of the Water Environment Federation 2009, pp. 2537-2554.

Rodrigue, P., and Rielly, A. 2009. Effectiveness of a membrane bioreactor on weak domestic wastewater containing polychlorinated biphenyls. Proceedings of the Water Environment Federation, Microconstituents and Industrial Water Quality 2009, pp. 174-184(11)

Russo, L., Rizzo, L., and Belgiorno, V. 2012. Ozone oxidation and aerobic biodegradation with spent mushroom compost for detoxification and benzo(a)pyrene removal from contaminated soil. Chemosphere, 87(6), pp. 595-601

SimaPro 6. 2008. Life Cycle Analysis Software. The Netherlands.

Sponza, D., and Oztekin, R. 2010. Effect of sonication assisted by titanium dioxide and ferrous ions on polyaromatic hydrocarbons (PAHs) and toxicity removals from a petrochemical industry wastewater in Turkey. Journal of Chemical Technology & Biotechnology, 85(7), pp. 913-925

U.S. Environmental Protection Agency (EPA). 2003. Arsenic Treatment Technology Handbook for Small Systems, EPA 816R03014.

U.S. Environmental Protection Agency. 2000. Methodology for Deriving Ambient Water Quality Criteria for the Protection of Human Health. EPA- 822-B-00-004, October 2000.

U.S. Environmental Protection Agency. 2007. The Emissions & Generation Resource Integrated Database – eGrid WebVersion1.0. United States Environmental Protection Agency, Washington, D.C.

U.S. Department of Agriculture (USDA). 1998. Continuing survey of food intakes by individuals: 1994-96, 1998. U.S. Department of Agriculture, Agricultural Research Service.

Water Environment Federation. 2009. Design of Municipal Wastewater Treatment Plants, WEF Manual of Practice 8, Fourth Edition, ASCE Manuals and Reports on Engineering Practice No. 76, Volume 1. Alexandria, VA.

WesTech brochure. Victorville case study. Vendor Brochure.

Williams, M. 2003. A Review of Wastewater Treatment by Reverse Osmosis. White paper

Yerushalmi, L., Nefil, S., Hausler, R., and Guiot, S. 2006. Removal of pyrene and benzo(a)pyrene from contaminated water by sequential and simultaneous ozonation and biotreatment. Water Environment Research, 78 (11).

Zeng, Y., Hong, A., and Wavrek, D. 2000. Integrated chemical-biological treatment of benzo[a]pyrene. Environmental Science and Technology, 34 (5), pp 854–862

7.0 Appendices

- Appendix A - Unit Process Sizing Criteria
- Appendix B - Greenhouse Gas Emissions Calculation Assumptions

Sierra Club v. EPA 18cv3472 NDCA Tier 1 ED_002061_00163679-00060

APPENDIX A - UNIT PROCESS SIZING CRITERIA

Table A-1. Unit Processes Sizing Criteria for Each Alternative

Unit Process	Units	Baseline Treatment	Advanced Treatment	Comment
Influent Pumping Station	unitless	3 Times Ave Flow	3 Times Ave Flow	This is peaking factor used to size the pumps (peak flow:average flow)
Alum Dose for CEPT (optional)	mg/L	20	20	This is the metal salt upstream of the primaries
Primary Clarifiers	gpd/sf	1000	1000	This is for average annual flows
Primary Solids Pumping Station	unitless	1.25 Times Ave Flow	1.25 Times Ave Flow	This is peaking factor used to size the pumps (maximum month flow:average flow)
Aeration System Oxygen Uptake Rate (OUR)	mg/L/hr	25	25	Average annual OUR is used in tandem with mixed liquor to determine the required aeration basin volume (the limiting parameter governs the activated sludge basin volume)
Aeration Basin Mixed Liquor	mg/L	1250	2500	Average annual mixed liquor is used in tandem with OUR (see next row) to determine the required aeration basin volume (the limiting parameter governs the activated sludge basin volume)
Secondary Clarifiers Hydraulic Loading	gpd/sf	650	--	Only use for Baseline as clarifiers governed hydraulically with short SRT (<2 days)
Secondary Clarifiers Solids Loading	lb/d/sf	--	24	Only use for Advanced Treatment as clarifiers governed by solids with long SRT (>8 days)
Return Activated Sludge (RAS) Pumping Station	unitless	1.25 Times Ave Flow	1.25 Times Ave Flow	RAS must have capacity to meet 100% influent max month Flow. The influent flow is multiplied by this peaking factor to determine RAS pumping station capacity.
Waste Activated Sludge (WAS) Pumping Station	gpm	1.25 Times Ave Flow	1.25 Times Ave Flow	WAS must have capacity to meet max month WAS flows. The average annual WAS flow is multiplied by this peaking factor to determine WAS pumping station capacity.
Microfiltration (MF) Flux	gfd	--	25	Based on average annual pilot experience in Coeur D'Alene, ID
MF Backwash Storage Tank	unitless	--	1.25	Storage tanks must have capacity to meet maximum month MF backwash flows. The average annual MF backwash volume is multiplied by this peaking factor to determine required volume.

Table A-1. Unit Processes Sizing Criteria for Each Alternative

Unit Process	Units	Baseline Treatment	Advanced Treatment	Comment
MF Backwash Pumps	unitless	--	1.25	Backwash pumps must have capacity to meet maximum month MF backwash flows. The average annual MF backwash flow is multiplied by this peaking factor to determine required flows.
Reverse Osmosis (RO)	gallon per square foot per day (gfd)	--	10	
RO Reject	%	--	20	This represents the percentage of feed flow that is rejected as brine
Chlorination Dose	mg/L	15	15	
Chlorination Storage Capacity	days	14	14	
Chlorine Contact Tank	min	30	30	This is for average annual conditions.
Dechlorination Dose	mg/L	15	15	
Dechlorination Storage Capacity	days	14	14	
Gravity Belt Thickener	gpm/m	200	200	This is for maximum month conditions using the 1.25 peaking factor from average annual to maximum month
Anaerobic Digestion	Hydraulic residence time (HRT)	18	18	This is for average annual conditions
Dewatering Centrifuge	gpm	120	120	This is for maximum month conditions using the 1.25 peaking factor from average annual to maximum month

gpd=gallons per day; sf=square feet; gpm=gallons per minute

Appendix B – Greenhouse Gas Emissions Calculation Assumptions

The steady state mass balance results were used to calculate GHG emissions. The assumptions used to convert between energy demand, chemical demand and production, as well as biologically-mediated gases (i.e., CH4 and N2O) and GHG emissions are provided in Table B-1. The assumptions are based on EPA (2007) values for energy production, an adaptation of the database provided in Ahn et al. (2010) for N2O emissions contribution, Intergovernmental Panel on Climate Change (IPCC) (2006) for fugitive CH4 emissions, and various resources for chemical production and hauling from production to the wastewater treatment plant (WWTP). Additionally, the biogas produced during anaerobic digestion that is used as a fuel source is converted to energy with MOP8 (2009) recommended waste-to-energy values.

Table B-1. Greenhouse Gas Emissions Assumptions

Parameters	Units	Value	Source
N_2O to CO_2 Conversion	lb CO_2/lb N_2O	296	IPCC, 2006
CH_4 to CO_2 Conversion	lb CO_2/lb CH_4	23	IPCC, 2006
Energy Production			
CO_2	lb CO_2/MWh	1,329	USEPA (2007)
N_2O	lb N_2O/GWh	20.6	USEPA (2007)
CH_4	lb CO_2/GWh	27.3	USEPA (2007)
Sum Energy Production	lb CO_2/MWh	1336	USEPA (2007)
GHGs per BTU Natural Gas			
CO_2	lb CO_2/MMBTU Natural Gas	52.9	CA Climate Action Registry Reporting Tool
N_2O	lb N_2O/MMBTU Natural Gas	0.0001	CA Climate Action Registry Reporting Tool
CH_4	lb CO_2/MMBTU Natural Gas	0.0059	CA Climate Action Registry Reporting Tool
Sum Natural Gas		53.1	CA Climate Action Registry Reporting Tool
Non-BNR N_2O Emissions	g N_2O/PE/yr	32	Ahn et al. (2010)
BNR N_2O Emissions	g N_2O/PE/yr	30	Ahn et al. (2010)
Biogas Purity	% Methane	65	WEF, 2009
Biogas to Energy	BTU/cf CH4	550	WEF, 2009
Digester Gas to Electrical Energy Transfer Efficiency	%	32	HDR Data

Table B-1. Greenhouse Gas Emissions Assumptions

Parameters	Units	Value	Source
Chemical Production			
Alum	lb CO_2/lb Alum	0.28	SimaPro 6.0 - BUWAL250, Eco-indicator 95
Polymer	lb CO_2/lb Polymer	1.18	Owen (1982)
Sodium Hypochlorite	lb CO_2/lb Sodium Hypochlorite	1.07	Owen (1982)
Building Energy Efficiency	kBTU/sf/yr	60	Calif. Commercial End-Use Survey (2006)
Hauling Distance		-	
Local	miles	100	-
Hauling Emissions			
Fuel Efficiency	miles per gallon	8	
CO_2	kg CO_2/gal diesel	10.2	CA Climate Action Registry Reporting Tool
N_2O	kg N_2O/gal diesel	0.0001	CA Climate Action Registry Reporting Tool
CH_4	kg CH_4/gal diesel	0.003	CA Climate Action Registry Reporting Tool
Sum Hauling Fuel	kg CO_2/gal diesel	10.2	CA Climate Action Registry Reporting Tool

GWh = Giga Watt Hours
MWh = Mega Watt Hours
MMBTU = Million British Thermal Units
BTU = British Thermal Unit
PE = Population Equivalents
kBTU/sf/yr = 1,000 British Thermal Units per Square Foot per Year
cf = cubic feet
lb = pound
kg = kilogram
gal = gallon

HDR Report to the NWPPA: *"Increasing the Fish Consumption Rate: Report of Fiscal Impact to Select Northwest Pulp & Paper Mills"*

HDR Engineering, Inc.
412 E. Parkcenter Blvd., Suite 100
Boise, ID 83706

EXECUTIVE SUMMARY

The Oregon Department of Environmental Quality (ODEQ), United States Environmental Protection Agency (EPA) and Confederated Tribes of the Umatilla Indian Reservation (CTUIR) are planning to make human health water quality criteria (HHWQC) more stringent. This change is due to indications by CTUIR that some of its members consume fish at a greater fish consumption rate (FCR) than the FCR that HHWQC are currently based on. If the FCR used for establishing HHWQC is increased, HHWQC will correspondingly become more stringent.

The initiative to determine the need and justification for the more stringent WQC is referred to as the Oregon Fish and Shellfish Consumption Rate Project and was started by ODEQ, EPA and CTUIR. As part of the project, the ODEQ commissioned Science Applications International Corporation (SAIC) to prepare a report evaluating necessary actions and costs to meet more stringent WQC. SAIC completed this report in January 2008 and it is named *Cost of Compliance with Water Quality Criteria for Toxic Pollutants for Oregon Waters*. It is the opinion of several point source dischargers that the SAIC report did not fully capture costs associated with achieving statewide compliance with revised HHWQC and the costs presented were significantly underestimated. In addition, the report did not sufficiently address the ability of currently available technology to meet the new HHWQC particularly when the HHWQC is below analytical method detection limits.

The purpose of this study and report is to verify the HHWQC that must be met, determine if proposed technologies will meet the limits, and develop an opinion of probable cost for implementing and operating these technologies. Since several of the proposed technologies have not been tested or advanced beyond bench-scale testing, there is much uncertainty in the full-scale applicability of some of the technologies. Therefore, bench testing, pilot-plant testing and/or full-scale demonstrations would be needed to verify with greater accuracy the actual achievable effluent quality for these technologies.

This report develops an opinion of fiscal impacts to the Oregon pulp and paper industry due to more stringent HHWQC from increased FCR. The following report methodology was used to determine these impacts:

1. Collection and review of treated wastewater effluent data from four different pulp and paper mills.
2. Determination of current HHWQC and potentially more stringent HHWQC due to increased FCR; these criteria were then compared with mill final effluent data.

Sierra Club v. EPA 18cv3472 NDCA Tier 1 ED_002061_00163680-00001

3. A list of candidate treatment technologies was developed for removing these constituents by reviewing studies pertinent to the Fish Consumption Project. Additional literature was reviewed as well to determine other potential treatment technologies.
4. Treatment technologies were screened for reliability and feasibility in meeting applicable HHWQC.
5. Capital and operational cost opinions were developed for the screened treatment alternatives.

Four representative mills were evaluated for this report and are summarized below. :

Mill A – Bleached Kraft Process
Mill B – Unbleached Kraft Process
Mill C – Thermomechanical Pulping/Deink Process
Mill D – Bleached Kraft Process

Data from the four mills was compiled, averaged and compared to HHWQC at increased FCRs. HHWQC at increased FCRs were calculated with the aid of a computer model spreadsheet developed by the ODEQ. The spreadsheet utilizes epidemiological data including reference doses, bioconcentration factors, carcinogen slope factors and other parameters to determine WQC for a given FCR, water intake and body weight.

The model was run at three different FCRs including 17.5 g/day, 63.2 g/day, 113 g/day and 175 g/day. Current WQC is based on a FCR of 17.5 g/day. Changes to WQC by ODEQ could be based on a FCR as high as 175 g/day. The spreadsheet model shows that current mill effluent quality may exceed some of the HHWQC at the elevated FCRs.

It is critical noting that the lowest method detection limit (MDL) for all EPA-approved analytical methods is greater than the new HHWQC for some constituents. While this report identifies potential technologies for removing these constituents, it is impossible to know for certain whether technologies actually can or cannot meet HHWQC since there is no way to accurately measure at such low concentrations at this time. Despite the inability to measure accurately to the HHWQC, it is expected that point source dischargers would still need to plan to meet HHWQC since more sensitive analytical methods could become available. Furthermore, regulating authorities would expect point source dischargers to meet WQC whether or not analytical methods could accurately detect below the WQC.

HHWQC limits at increased FCRs are extremely stringent compared to other environmental standards. HHWQC at increased FCRs should be scrutinized to compare the value of improving water quality with to the actual protection to human health. For example, revised HHWQC at increased FCRs are multiple orders of magnitude more protective than national drinking water standards. Another comparison of note is background water quality. A review of current water quality shows that many of the revised HHWQC may already be exceeded in Oregon surface waters. Therefore, the

Sierra Club v. EPA 18cv3472 NDCA Tier 1 ED_002061_00163680-00002

opportunity for applying pass-through credits to point source dischargers should be considered where background constituent levels are high.

A literature review of treatment technologies was completed to determine which, if any, technologies can reliably meet the revised HHWQC at higher FCRs. The literature review showed that most published results for constituent removal are related to higher untreated constituent concentrations and technologies for achieving less stringent effluent criteria. These less stringent effluent criteria (including drinking water standards) are orders of magnitude greater than HHWQC for this study. As a result, little research has been conducted investigating constituent removal technologies to extremely low levels. Therefore, published literature does not support or deny that more stringent HHWQC can be met using currently available technologies. Technologies suggested for meeting low level constituents (mostly for metals) included iron coprecipitation, granular activated carbon, ion exchange, nanofiltration and reverse osmosis. Further evaluation of the technologies showed that iron coprecipitation, nanofiltration and reverse osmosis would have the best possibility of meeting HHWQC at increased FCRs and were then evaluated for cost.

Capital and O&M cost opinions for the four mills were evaluated for the three candidate technologies. The costs are summarized below.

Summary of Capital, O&M and Annualized Costs

		Mill A	Mill B	Mill C	Mill D
Capital Costs	Iron Coprecipitation	$31,000,000	$25,000,000	$19,000,000	$34,000,000
	Nanofiltration	$91,000,000	$67,000,000	$41,000,000	$101,000,000
	Reverse Osmosis	$107,000,000	$79,000,000	$48,000,000	$119,000,000
Annual O&M Cost	Iron Coprecipitation	$28,000,000	$20,000,000	$11,000,000	$31,000,000
	Nanofiltration	$9,500,000	$6,700,000	$3,900,000	$10,500,000
	Reverse Osmosis	$10,500,000	$7,400,000	$4,300,000	$11,700,000
Annualized Costs (10 yrs, 7%)	Iron Coprecipitation	$32,000,000	$24,000,000	$14,000,000	$36,000,000
	Nanofiltration	$22,000,000	$16,000,000	$10,000,000	$25,000,000
	Reverse Osmosis	$26,000,000	$19,000,000	$11,000,000	$29,000,000

Cost provided above represent only four of the eight large mills located in Oregon. The cost related to simply installing technology to meet revised HHWQC at increased FCRs is significant and would cost the Oregon pulp and paper industry in excess of $500 million. In addition, annual costs to operate these technologies would cost Oregon pulp and paper mills in the range of $30 to $90 million annually. While costs are significant, there is no certainty at this time that revised HHWQC could be met using existing technology. Steps forward should first ensure that technologies are available for meeting more stringent HHWQC before significant capital expenditures are made.

Sierra Club v. EPA 18cv3472 NDCA Tier 1 ED_002061_00163680-00003

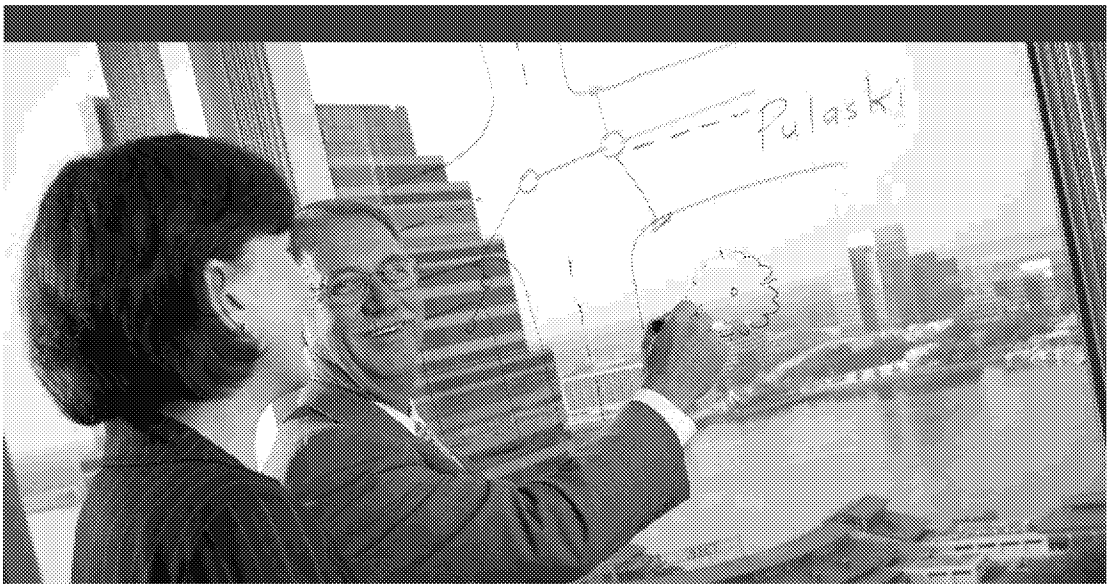

Source: Scott Dobry Pictures

Business Indicators

- Ranked No. 19 among *Engineering News-Record*'s 2007 "Top 500 Design Firms"
- Projects in all 50 states and in 60 countries
- More than 90 years of client service

HDR is an architectural, engineering, planning and consulting firm that excels at helping clients manage complex projects and make sound decisions.

As an integrated firm, HDR provides a total spectrum of services for our clients. Our staff of professionals represents hundreds of disciplines and partner on blended teams nationwide to provide solutions beyond the scope of traditional A/E/C firms.

HDR's operating philosophy is to be an expertise-driven national firm that delivers tailored solutions through a strong local presence. HDR's ability to draw upon companywide resources and expertise is a great strength in meeting and exceeding your expectations.

History and Size

- Founded in 1917
- More than 7,500 employee-owners
- More than 165 locations worldwide
- Full-service, multidisciplinary staff

Service Areas

HDR provides solutions that help clients manage complex projects in the following areas:

- Civic
- Community Planning & Urban Design
- Construction Services
- Design-Build
- Economics & Finance
- Environmental
- Healthcare
- Interior Design
- Management & Planning Services
- Power & Energy
- Program Management
- Project Development
- Science & Technology
- Security
- Sustainable Design
- Transportation
- Water/Wastewater

HDR

FOR IMMEDIATE RELEASE

December 5, 2013

Contact: Jocelyn McCabe, APR
Vice President, Communications
Association of Washington Business
360.943.1600 (O) or Ex. 6
JocelynM@awb.org

Study: Technology not available to meet proposed water quality standards

Municipal ratepayers, consumers to face significant costs for standards that can't be met

OLYMPIA — Even the most advanced technology available today cannot meet limits driven by the state's proposed water quality standards — and would potentially cost billions with little or no benefit to the environment.

Those are the key findings from a new report issued today by the state's three largest trade associations for businesses, cities and counties.

The report, "Treatment Technology Review and Assessment," was conducted by HDR Engineering, Inc. to assess the cost and effectiveness of advanced treatment technologies to meet these revised limits. The Association of Washington Business (AWB), the Association of Washington Cities (AWC) and the Washington State Association of Counties (WSAC) commissioned the report.

The review was prompted by the state's effort to update its surface water quality standards for toxics, in part based on revised estimates of how much fish people eat (referred to as the "fish consumption rate" or FCR). This affects industrial and municipal dischargers – businesses, cities and counties that discharge into public waters.

One goal of the state Department of Ecology's effort is to provide greater health protections for high fish-consuming populations — a goal shared by employers and local governments around the state.

AWB, AWC and WSAC believe a dramatically more stringent water quality standard, like that recently adopted in Oregon, is literally impossible for affected municipal and industrial facilities to meet. Oregon's standard is considered the most stringent in the nation, the impacts of which

have not yet been felt since no major permits have been issued since the standards were adopted.

HDR's analysis focused on four very difficult-to-treat pollutants expected to be in the effluent of the state's municipal and industrial wastewater treatment facilities: PCBs, mercury, arsenic and benzo(a)pyrene — a commonly encountered hydrocarbon byproduct.

Their findings: Even the most advanced water treatment technologies would not be able to meet standards for the four targeted pollutants. Any businesses or local governments would be in violation of the proposed standard, despite making significant investments in technology that would not work.

HDR's treatment technology review anticipates additional capital, operating and environmental costs (e.g. higher energy usage) as a result of industrial and municipal efforts to meet the proposed standard.

"Cities around the state support Governor Inslee's efforts to find a balanced and practical solution to this issue," said Mike McCarty, CEO of the Association of Washington Cities. "Cities collectively operate hundreds of treatment plants cleaning up hundreds of millions of gallons of wastewater each day. We believe utility ratepayers shouldn't be faced with billions of dollars in investments that still expose them to significant legal liability because standards can't be met. Some cities estimate residential utility bills could increase to as much as $200 a month under this scenario," he said. "Instead, we'd like to find a creative and balanced solution that looks at the sources of the toxics and how to get and keep them out of the water."

HDR's analysis also suggests significant implications for private sector employers and the state's economic climate if the proposed water quality standards are adopted.

"What this study underscores is the need for balance in our conversation about water quality standards. We need clean water and we need to protect human life, but we also need a standard that can be reasonably met with existing technology," said Don Brunell, president of the Association of Washington Business.

"As the study notes, even if our members do make the required investments, they still won't meet the proposed standards. And that just feeds uncertainty – about permitting, about growth and expansion of business and, eventually, about jobs in Washington state," he said.

"New businesses are unlikely to locate here given a standard like this. And existing businesses won't invest in technology that doesn't meet standard. So they'll close up shop and move elsewhere. And that means the potential loss of jobs, particularly in rural areas of Washington state that cannot take another massive industry shut down.

"We have to work together to find a solution that works for everyone. This study confirms the proposed standards will not get us where we need to be," he said. "We have to keep working on a more equitable solution for everyone."

A PDF copy of the HDR study is available here.

About the Association of Washington Business

Formed in 1904, the Association of Washington Business is Washington's oldest and largest statewide business association, and includes more than 8,100 members representing 700,000 employees. AWB serves as both the state's chamber of commerce and the manufacturing and technology association. While its membership includes major employers like Boeing, Microsoft and Weyerhaeuser, 90 percent of AWB members employ fewer than 100 people. More than half of AWB's members employ fewer than 10. For more about AWB, visit www.awb.org.

About the Association of Washington Cities

Founded in 1933, the Association of Washington Cities (AWC) is a private, non-profit, non-partisan corporation that represents Washington's cities and towns before the state legislature, the state executive branch and with regulatory agencies. Membership is voluntary. However, AWC consistently maintains 100% participation from Washington's 281 cities and towns. A 25-member Board of Directors oversees the association's activities.

About the Washington State Association of Counties

Created in 1906, the Washington State Association of Counties (WSAC) is a voluntary, non-profit association serving all of Washington's 39 counties. WSAC members include elected county commissioners, council members and executives from all of Washington's 39 counties. The Association provides a variety of services to its member counties including advocacy, training and workshops, a worker's compensation retrospective rating pool and a forum to network and share best practices. While voting within the organization is limited to county commissioners, council members and county executives, the Association also serves as an umbrella organization for affiliate organizations representing county road engineers, local public health officials, county administrators, emergency managers, county human service administrators, clerks of county boards, and others. In addition, we work closely with our sister organization, the Washington Association of County Officials (WACO), which serves independently elected non-judicial county officials including auditors, treasurers, prosecutors, coroners, clerks, and sheriffs.

-30-

NPDES Water Quality Permitting Program Evaluation

Submitted to:

Oregon Legislative Assembly

By: Richard Whitman, Interim Director

Oregon Department of Environmental Quality

December 2016

700 NE Multnomah Street
Suite 600
Portland, OR 97232
Phone: 503-229-5502
800- 452-4011
Fax: 503- 229-6037
Contact: Karen Tarnow
www.oregon.gov/DEQ

DEQ is a leader in restoring, maintaining and enhancing the quality of Oregon's air, land and water.

State of Oregon
Department of Environmental Quality

This report prepared by:

Oregon Department of Environmental Quality
700 NE Multnomah Street, Suite 600
Portland, OR 97232
1-800-452-4011
www.oregon.gov/deq

Contact:
Karen Tarnow
503- 229-5988

Table of Contents

Executive Summary 2
1. Introduction 3
2. Project Plan 3
3. Recommended Actions 4
   Leadership 4
   Community Capacity 5
   Alignment Across Programs and with Federal Requirements 5
   Quality and Efficiency 6
   Staffing and Workload 7
   Program Funding 7
   Communications and Progress Reporting 7
4. Implementing the Recommendations 8
Appendix 1 – Water Quality Permitting Budget Note 9

Executive Summary

The 2015 Oregon Legislature directed the Oregon Department of Environmental Quality to hire an outside consultant to evaluate its National Pollutant Discharge Elimination System (NPDES) Water Quality permitting program and make recommendations to improve the quality and timeliness of individual NPDES permits. There are currently 360 individual municipal and industrial NPDES wastewater permits in Oregon, which must be renewed every five years. DEQ administers other water quality permits (general NPDES permits, Water Pollution Control Facility (WPCF) Permits, and water quality certifications), but the permit backlog that motivated this evaluation is concentrated in the individual NPDES permit program.

DEQ contracted with MWH Americas, Inc., now part of Stantec, and its subcontractor Larry Walker Associates to conduct the evaluation. The consultants' work began in April and culminated in December 2016 with the final Recommendations and Implementation Plan. Project information and documents are available on DEQ's website at http://www.deq.state.or.us/wq/wqpermit/review.htm

Through research and interviews with dozens of knowledgeable staff and stakeholders, the consultants identified a number of issues contributing to the NPDES permit backlog, including:

- Lack of clarity regarding decision-making responsibility
- Ambiguity regarding the roles of staff working on permits (technical advisor vs. regulator)
- Lack of coordination between water quality planning and permitting
- The difficulty for some dischargers to meet water quality standards, requiring complex regulatory solutions and/or expensive engineering

The consultants recommended numerous actions and implementation approaches covering a number of different topic areas to address these issues. Topic areas include leadership, community capacity, alignment across programs and with federal regulations, quality and efficiency, staffing and workload, program funding, and communications and progress reporting.

The overarching message in the report is that eliminating the NPDES permit backlog and achieving a sustainable permitting program is dependent on addressing the recommended actions in all topic areas, not all of which are under DEQ's control. If recommended actions are only partially implemented, while some gains may accrue, a sustainable permitting program will not be possible.

DEQ and the Oregon Environmental Quality Commission are committed to implementing the recommendations in the report, and consider this to be a top priority for the agency – one which will likely require years of focused attention to resolve. Internal process improvements are underway and DEQ is engaging external partners and stakeholders to seek their assistance in implementing the report's recommendations.

The Water Quality program's immediate priorities include developing a longer-term work plan and a communications plan, implementing initial internal organizational changes, and undertaking a "permit readiness review." The readiness review identifies backlogged permits for which there are sufficient water quality data, compliance solutions and community capacity to immediately proceed with permit renewal. The readiness review also identifies barriers to renewing other permits, which provides information to support development of a strategic plan to remedy those barriers. The program will continue writing NPDES permits while implementing the recommendations but during the initial stages permit writers may be called upon to lend their expertise to critical process improvement efforts and updating permit writing tools and templates. DEQ will be able to provide more information on next steps and expected outcomes by late January 2017.

1. Introduction

The 2015 Oregon Legislature, due to concerns with a backlog in renewing individual municipal and industrial NPDES water quality permits, directed DEQ to hire an outside consultant to evaluate the NPDES Water Quality permitting program and make recommendations on improving the quality and timeliness of permits. The full text of the budget note is provided in Appendix A.

The evaluation focuses on the 360 DEQ-issued individual and municipal NPDES permits. These are federal permits authorized by the federal Clean Water Act. Each permit must be renewed every five years. While a permit remains in effect even if its renewal is delayed, there can be negative consequences. Outdated permits may not assure that discharges meet current water quality standards if the standards have been expanded or tightened since the permit was originally issued. Further, a permitted facility may not be able to expand or implement process changes if those actions would require a change to its permit, because DEQ is not able to modify expired permits. In the long term, this uncertainty can lead to disinvestment in existing manufacturing facilities and to significant capital costs to local governments. Finally, expired permits can also hinder economic development. Under certain circumstances, a new facility may not be able to obtain a permit if the permits of other facilities discharging to that waterbody are out of date.

2. Project Plan

In May 2015, DEQ assembled a project team and began procuring a contractor. DEQ requested support from the Department of Administrative Services in developing the Request for Proposal. DEQ met three times with members of the Water Quality program's Blue Ribbon Committee to obtain its feedback on a draft scope of work for the proposal, and made improvements to the scope based on the committee's input.

DEQ selected a contractor in early 2016 through a competitive procurement process. The contract was awarded to MWH Americas, Inc., now part of Stantec, and its subcontractor

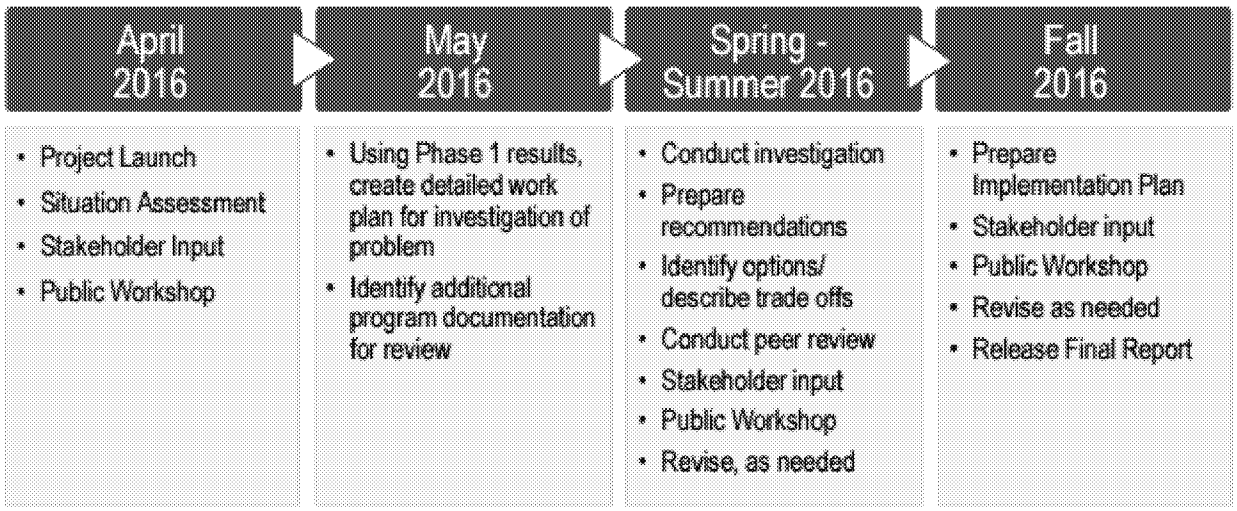

Larry Walker Associates. Work began in April and culminated in December 2016 with the final Recommendations and Implementation Plan.

The project plan involved researching past reports and other permitting program documents, interviewing dozens of knowledgeable staff and stakeholders, holding three public workshops to report findings and receive feedback on draft recommendations, and expert peer review of draft recommendations.

3. Recommended Actions

DEQ received the Recommendations and Implementation Plan on Dec. 8, 2016. It contains recommended actions and implementation approaches covering a number of different topic areas. The report is available at http://www.deq.state.or.us/wq/wqpermit/review.htm

The report's overarching message is that eliminating the permit backlog and achieving a sustainable level of NPDES permitting is dependent on widespread changes at the systems level. If recommended actions are only partially implemented, the backlog problem that has persisted already for over fifteen years is unlikely to diminish measurably and Oregon's NPDES permitting program will fail to achieve a sustainable level of operation.

A high-level overview of the final report including excerpts of the consultants' key findings and recommended actions is provided below.

Leadership

The lack of clear decision authority, the decentralized structure of DEQ and the distribution of water quality personnel across several organizational entities inhibits the ability of the organization to overcome its permit backlog.

Recommended Actions

- Elevate permit renewal to a top priority of the Water Quality program, and centralize authority for permit issuance.

- Update individual and organizational performance metrics to emphasize the elevated importance of permit renewals.

- Sunset the Blue Ribbon Committee and convene one or more new advisory bodies for the program that has a well-defined role in helping to implement the report's recommendations.

Community Capacity

Some of Oregon's communities lack the technical and/or financial resources to comply with their NPDES permits. This contributes to the permit backlog in two ways. In some instances, DEQ permit writers have provided technical support to permit holders that extends beyond their core permit-writing responsibilities. This reduces the amount of time devoted to permit renewal. DEQ has also been reluctant to issue permits at times due to concerns about a community's ability to afford or carry out required facility upgrades.

Key Actions

- Develop an inventory of permitted facilities that includes information on their ability to comply with existing and anticipated future permit requirements.

- Estimate additional resources needed to build treatment facilities or natural systems to achieve compliance.

- Convene an advisory group to identify and develop strategies to assist individual municipal and industrial NPDES permit holders with both the technical expertise needed to develop, design and operate wastewater facilities, and the financial assistance necessary to pay for facility upgrades, expansions or other changes. The advisory group should include representation from the Legislature, as it is likely that legislative action will be required for the program to succeed in the long term.

Alignment Across Programs and with Federal Requirements

NPDES permits must comply with federal requirements including but not limited to implementation of water quality standards and Total Maximum Daily Load (TMDL) requirements in permits. DEQ has not always integrated its work in water quality standards and TMDLs with its NPDES permit program, to assure that standards and TMDLs can be readily implemented in permits. Draft permits have not consistently aligned with these requirements and sometimes require rework, adding to time it takes to issue or renew a permit.

Key Actions

- Work with stakeholders to identify effective strategies and procedures to implement water quality standards and TMDLs in permits, including strategic use of permitting tools such as site-specific standards, multiple discharger variances and trading programs.

- Evaluate DEQ's process for developing water quality standards. Develop methods to address cases where it has been problematic to attain beneficial uses and water quality standards associated with those uses.

Quality and Efficiency

A series of process improvements are needed to improve and ensure consistent permit quality and address significant inefficiencies in the NPDES permit renewal process.

Key Actions – Data Management

- Execute a plan to efficiently gather and deliver data that is routinely needed as part of the permitting process.

- Establish electronic reporting systems, and consult with the regulated community to develop a process for accepting monitoring data electronically, in a manner that makes it easily accessible to permit writers.

Key Actions – Process Improvement

- Review and update permit renewal process maps to remedy inefficiencies and roadblocks.

- Formalize the updated procedures and train staff in their use. Verify that standardized procedures are consistently used.

Key Actions – Permit Tools and Guidance

- Develop a comprehensive permit writer's guidance manual and training program.

- Implement the training program. Conduct post-permit issuance reviews to determine effectiveness of tools and training, and update tools or retrain staff as needed.

- Update and improve user-friendliness of permit templates and tools. Implement processes to ensure they are kept up-to-date with changing policies, water quality standards and legal decisions.

Staffing and Workload

Differences in the level of skills and expertise among permitting staff contributes to inefficiencies and inconsistent permit quality. Given Oregon's current need to reduce backlogs and increase the average number of annual permit renewals, additional short-term resources will be essential to address the backlog. DEQ must also develop the data necessary to provide information needed to support long-term resource planning.

Key Actions

- Implement the following measures to achieve an immediate short-term infusion of additional staff resources. Some may require may require additional program funding or create deficits in other program areas if existing staff are reassigned to do permit-related work.
    - Realign work tasks so that permit writing specialists focus only on permit renewals, and not on technical assistance or enforcement.
    - Secure contractors and/or reassign staff to accomplish high-priority tasks, including moving resources as needed within and between regions to achieve permit issuance objectives.
    - Add temporary staff to supplement the pool of permit writers.
- Collect and utilize data on the amount of time it takes to complete permitting tasks to determine the staffing level needed to eliminate the permit backlog and meet state and federal requirements over the long term.

Program Funding

Circumstances outside of DEQ's control drive the budget process. When permit renewals are delayed due to inadequate program resources, the delay increases the ultimate cost of permit renewal due to inefficiencies and data problems. Funding uncertainty and fluctuations may also impede DEQ's ability to develop and implement effective permit renewal plans.

Key Actions

- Develop a per-permit funding formula for renewals.
- Establish a realistic annual funding estimate based on a five-year work plan. Initial iterations must consider routine and backlogged workload.
- Establish a process for flagging and addressing annual funding gaps.

Communications and Progress Reporting

Tracking and reporting progress is essential to ensure staff and stakeholders are informed, involved and committed to success. Early reporting measures should focus on progress

toward implementing short-term changes necessary to improve efficiency and quality control. Course corrections and schedule adjustments are inevitable due to the high number of variables. It will be critical to promptly communicate these to internal and external stakeholders.

Key Actions

- Develop and resource a Permit Backlog Reduction Communications Plan.
- Create metrics and institute reporting methods to track implementation progress. Ensure sufficient measures to allow for plan or schedule adjustments if needed.

4. Implementing the Recommendations

Now that the evaluation has been completed and the recommendations are in hand, DEQ is turning its attention to implementation. DEQ and the Environmental Quality Commission are committed to implementing the recommendations in the report and consider this to a top priority for the agency – one that will likely require years of focused attention to resolve. Internal process improvements are underway and DEQ is engaging external partners and stakeholders to seek their assistance in implementing the report's recommendations.

The Water Quality program's immediate priorities include developing a longer-term work plan and a communications plan, implementing initial internal organizational changes, and undertaking a "permit readiness review." The readiness review identifies backlogged permits for which there are sufficient water quality data, compliance solutions and community capacity to immediately proceed with permit renewal. The readiness review also identifies barriers to renewing other permits, which provides information to support development of a strategic plan to remedy those barriers. The program will continue writing NPDES permits while implementing the recommendations but during the initial stages permit writers may be called upon to lend their expertise to critical process improvement efforts and updating permit writing tools and templates. DEQ will be able to provide more information on next steps and expected outcomes by late January 2017.

Appendix 1 – Water Quality Permitting Budget Note

2015 Legislative Session, Joint Committee on Ways and Means, Subcommittee on Natural Resources

Budget Note:
Water Quality Permitting
The Subcommittee expressed concerns with the backlog in renewing water quality permits and directed the Department of Environmental Quality (DEQ) to undertake a review of its permitting program. To achieve this, the Department is directed to hire an outside consultant with the knowledge and skills needed to conduct an evaluation of the program and the ability to make recommendations. These recommendations will focus on improving the quality and timeliness of water quality permits issued under the NPDES program and meeting the associated metrics developed by the Blue Ribbon Committee in its 2004 report (percent of permits being current, inspections, DMR reviews and assignment of general permit coverage) or any agreed upon replacement metrics. DEQ will report to the appropriate legislative committee on or before December 2015 and again by December 2016 on progress toward completing the evaluation, meeting the program metrics and implementing recommendations that come out of the consulting work. DEQ will work with the Blue Ribbon Committee on implementing these recommendations for meeting programs goals and will provide the Blue Ribbon Committee with periodic updates on progress being made to improve the program.

Message

From: Poling, Jan [Jan_Poling@afandpa.org]
Sent: 8/24/2017 5:40:40 PM
To: Albores, Richard [/o=ExchangeLabs/ou=Exchange Administrative Group (FYDIBOHF23SPDLT)/cn=Recipients/cn=ce14f8709a5e4ac383af9d0b767fd8af-Ralbor02]; 'dell_perelman@americanchemistry.com' [dell_perelman@americanchemistry.com]; 'lindens@api.org' [lindens@api.org]; 'Wagner@api.org' [Wagner@api.org]; 'brooks.smith@troutmansanders.com' [brooks.smith@troutmansanders.com]; 'mghazal@brt.org' [mghazal@brt.org]; Richard Moskowitz [/o=ExchangeLabs/ou=Exchange Administrative Group (FYDIBOHF23SPDLT)/cn=Recipients/cn=user2443f1e7]; 'rlattimore@croplifeamerica.org' [rlattimore@croplifeamerica.org]; 'cmurray@nafoalliance.org' [cmurray@nafoalliance.org]; 'giordann@nppc.org' [giordann@nppc.org]; 'ellens@fb.org' [ellens@fb.org]; 'ksweeney@nma.org' [ksweeney@nma.org]; 'kkirmayer@aar.org' [kkirmayer@aar.org]; 'jrizzo@nahb.org' [jrizzo@nahb.org]; 'jaugello@nahb.org' [jaugello@nahb.org]; Michael Formica [/o=ExchangeLabs/ou=Exchange Administrative Group (FYDIBOHF23SPDLT)/cn=Recipients/cn=user6d63216b]; 'brownl@api.org' [brownl@api.org]; 'tward@nahb.org' [tward@nahb.org]; 'gcrandall@umwa.org' [gcrandall@umwa.org]; Schwab, Justin [/o=ExchangeLabs/ou=Exchange Administrative Group (FYDIBOHF23SPDLT)/cn=Recipients/cn=eed0f609c0944cc2bbdb05df3a10aadb-Schwab, Jus]; 'syager@beef.org' [syager@beef.org]; Goss, Rick [rgoss@itic.org]; akoethe@aar.org
CC: Packard, Elise [/o=ExchangeLabs/ou=Exchange Administrative Group (FYDIBOHF23SPDLT)/cn=Recipients/cn=6d4ad4c6abb24f54a2c8c16fa17ba0fd-Packard, El]; Minoli, Kevin [/o=ExchangeLabs/ou=Exchange Administrative Group (FYDIBOHF23SPDLT)/cn=Recipients/cn=c9c0070d651a4625ac20258369f9b050-KMINOLI]; Schwab, Justin [/o=ExchangeLabs/ou=Exchange Administrative Group (FYDIBOHF23SPDLT)/cn=Recipients/cn=eed0f609c0944cc2bbdb05df3a10aadb-Schwab, Jus]; Fotouhi, David [/o=ExchangeLabs/ou=Exchange Administrative Group (FYDIBOHF23SPDLT)/cn=Recipients/cn=febaf0d56aab43f8a9174b18218c1182-Fotouhi, Da]; Veney, Carla [/o=ExchangeLabs/ou=Exchange Administrative Group (FYDIBOHF23SPDLT)/cn=Recipients/cn=c354b58bf2b1464d8afac7bbd2a7a88c-CVeney]
Subject: RE: INQUIRY: Fall Industry Association and EPA OGC Dialogue Dates

I can only meet after 2:30 pm on the 28th I may send someone in my place if needed

Jan Poling

From: Albores, Richard [mailto:Albores.Richard@epa.gov]
Sent: Thursday, August 24, 2017 1:30 PM
To: 'dell_perelman@americanchemistry.com' <dell_perelman@americanchemistry.com>; 'lindens@api.org' <lindens@api.org>; 'Wagner@api.org' <Wagner@api.org>; 'brooks.smith@troutmansanders.com' <brooks.smith@troutmansanders.com>; 'mghazal@brt.org' <mghazal@brt.org>; Richard Moskowitz <rmoskowitz@afpm.org>; 'rlattimore@croplifeamerica.org' <rlattimore@croplifeamerica.org>; 'cmurray@nafoalliance.org' <cmurray@nafoalliance.org>; 'giordann@nppc.org' <giordann@nppc.org>; 'ellens@fb.org' <ellens@fb.org>; 'ksweeney@nma.org' <ksweeney@nma.org>; 'kkirmayer@aar.org' <kkirmayer@aar.org>; Poling, Jan <Jan_Poling@afandpa.org>; 'jrizzo@nahb.org' <jrizzo@nahb.org>; 'jaugello@nahb.org' <jaugello@nahb.org>; Michael Formica <formicam@nppc.org>; 'brownl@api.org' <brownl@api.org>; 'tward@nahb.org' <tward@nahb.org>; 'gcrandall@umwa.org' <gcrandall@umwa.org>; Schwab, Justin <schwab.justin@epa.gov>; 'syager@beef.org' <syager@beef.org>; Goss, Rick <rgoss@itic.org>; akoethe@aar.org
Cc: Packard, Elise <Packard.Elise@epa.gov>; Minoli, Kevin <Minoli.Kevin@epa.gov>; Schwab, Justin <schwab.justin@epa.gov>; Fotouhi, David <fotouhi.david@epa.gov>; Veney, Carla <Veney.Carla@epa.gov>
Subject: INQUIRY: Fall Industry Association and EPA OGC Dialogue Dates

Hello all:

I hope you have all had a great summer and are looking forward to a productive and bountiful fall season.

I am writing to determine whether you all would be interested and available to join the Office of General Counsel and our Regional Counsels for a follow up to our February conversation. It has been a busy last six months here at the Agency, and we have been awaiting the appointment of a General Counsel, and hoping to schedule a follow up dialogue with his/her presence. However, as the time continues without clear indications that will continue in the near term, we want to schedule another meeting so we don't lose momentum and we keep the lines of communication open. We would like to provide you with information on how we have divided up roles/responsibilities for our new management team, and introduce our newest political Deputy General counsels (Erik Baptist and David Fotouhi). As you may recall, you met Justin Schwab at our February open house. We also want to hear from you on the legal and policy issues that are important to you and your constituents.

- **Please let me know your availability for a noon meeting here at EPA on either September 27th or 28th by Friday, September 1.**

We will assess the date that works best for most and send out a meeting invitation with more specific information and instructions for signing into the building.

R

RICHARD L. ALBORES
Associate Deputy General Counsel * Office of General Counsel * U.S. EPA * 1200 Pennsylvania Avenue, NW * MC2310A * Washington, DC 20460 * email: albores.richard@epa.gov * phone: 202.564.7102 * mobile: Ex. 6

Message

From: Michael Formica [formicam@nppc.org]
Sent: 8/24/2017 5:35:21 PM
To: Albores, Richard [/o=ExchangeLabs/ou=Exchange Administrative Group (FYDIBOHF23SPDLT)/cn=Recipients/cn=ce14f8709a5e4ac383af9d0b767fd8af-Ralbor02]
CC: dell_perelman@americanchemistry.com; lindens@api.org; Wagner@api.org; brooks.smith@troutmansanders.com; mghazal@brt.org; Richard Moskowitz [/o=ExchangeLabs/ou=Exchange Administrative Group (FYDIBOHF23SPDLT)/cn=Recipients/cn=user2443f1e7]; rlattimore@croplifeamerica.org; cmurray@nafoalliance.org; Nick Giordano [giordann@nppc.org]; ellens@fb.org; ksweeney@nma.org; kkirmayer@aar.org; jan_poling@afandpa.org; jrizzo@nahb.org; jaugello@nahb.org; brownl@api.org; tward@nahb.org; gcrandall@umwa.org; Schwab, Justin [/o=ExchangeLabs/ou=Exchange Administrative Group (FYDIBOHF23SPDLT)/cn=Recipients/cn=eed0f609c0944cc2bbdb05df3a10aadb-Schwab, Jus]; syager@beef.org; Goss, Rick [rgoss@itic.org]; akoethe@aar.org; Packard, Elise [/o=ExchangeLabs/ou=Exchange Administrative Group (FYDIBOHF23SPDLT)/cn=Recipients/cn=6d4ad4c6abb24f54a2c8c16fa17ba0fd-Packard, El]; Minoli, Kevin [/o=ExchangeLabs/ou=Exchange Administrative Group (FYDIBOHF23SPDLT)/cn=Recipients/cn=c9c0070d651a4625ac20258369f9b050-KMINOLI]; Fotouhi, David [/o=ExchangeLabs/ou=Exchange Administrative Group (FYDIBOHF23SPDLT)/cn=Recipients/cn=febaf0d56aab43f8a9174b18218c1182-Fotouhi, Da]; Veney, Carla [/o=ExchangeLabs/ou=Exchange Administrative Group (FYDIBOHF23SPDLT)/cn=Recipients/cn=c354b58bf2b1464d8afac7bbd2a7a88c-CVeney]
Subject: Re: INQUIRY: Fall Industry Association and EPA OGC Dialogue Dates

Thank you for following up.

Yes I am interested in attending and available on both September 27th and September 28th.

Looking forward to our discussion.

Michael C. Formica
National Pork Producers Council
Ex. 6

Sent from my SwinePhone

On Aug 24, 2017, at 1:29 PM, Albores, Richard <Albores.Richard@epa.gov> wrote:

> Hello all:
>
> I hope you have all had a great summer and are looking forward to a productive and bountiful fall season.
>
> I am writing to determine whether you all would be interested and available to join the Office of General Counsel and our Regional Counsels for a follow up to our February conversation. It has been a busy last six months here at the Agency, and we have been awaiting the appointment of a General Counsel, and hoping to schedule a follow up dialogue with his/her presence. However, as the time continues without clear indications that will continue in the near term, we want to schedule another meeting so we don't lose momentum and we keep the lines of communication open. We would like to provide you with information on how we have divided up roles/responsibilities for our new management team, and introduce our newest political Deputy General counsels (Erik Baptist and David Fotouhi). As you may recall, you met Justin Schwab at our February open house. We also want to hear from you on the legal and policy issues that are important to you and your constituents.

- <!--[if !supportLists]--><!--[endif]-->**Please let me know your availability for a noon meeting here at EPA on either September 27th or 28th by Friday, September 1.**

We will assess the date that works best for most and send out a meeting invitation with more specific information and instructions for signing into the building.

R

~~~~~~

RICHARD L. ALBORES
Associate Deputy General Counsel * Office of General Counsel * U.S. EPA * 1200 Pennsylvania Avenue, NW * MC2310A * Washington, DC 20460 * email: albores.richard@epa.gov * phone: 202.564.7102 * mobile Ex. 6
~~~~~~

Message

From: Broome, Shannon S. [SBroome@hunton.com]
Sent: 7/17/2017 5:48:41 PM
To: Baptist, Erik [/o=ExchangeLabs/ou=Exchange Administrative Group (FYDIBOHF23SPDLT)/cn=Recipients/cn=10fc1b085ee14c6cb61db378356a1eb9-Baptist, Er]; Schwab, Justin [/o=ExchangeLabs/ou=Exchange Administrative Group (FYDIBOHF23SPDLT)/cn=Recipients/cn=eed0f609c0944cc2bbdb05df3a10aadb-Schwab, Jus]; Knauss, Chuck [CKnauss@hunton.com]; Jacobi, Patrick R. (ENRD) [Patrick.R.Jacobi@usdoj.gov]
Subject: Update re motion

All – I just spoke to Leslie. NEDA does not oppose an extension to July 28, 2017.

Best regards,

HUNTON & WILLIAMS

Shannon S. Broome
Partner
sbroome@hunton.com
415.975.3718 (SF)
202.955.1912 (DC)
Ex. 6

Hunton & Williams LLP
50 California Street
17th Floor
San Francisco, CA 94105
hunton.com

Check out Hunton's new Environmental and Energy Law Blog! https://www.huntonnickelreportblog.com/
This communication is confidential and is intended to be privileged pursuant to applicable law. If the reader of this message is not the intended recipient, please advise by return email immediately and then delete this message and all copies and backups thereof.

Message

From: Ferguson, Michael A. [mferguson@bakerlaw.com]
Sent: 5/30/2017 5:38:58 PM
To: Schwab, Justin [/o=ExchangeLabs/ou=Exchange Administrative Group (FYDIBOHF23SPDLT)/cn=Recipients/cn=eed0f609c0944cc2bbdb05df3a10aadb-Schwab, Jus]; Justin Schwab
Ex. 6
Subject: Ex. 6 Resume
Attachments: ATT00001.htm; ATT00002.htm; ATT00003.htm; Ex. 6 CoverLetter.pdf; Ex. 6 Resume.pdf; Rep.Lance. Ex. 6 Letter.pdf

Hi Justin. Hope all is well over there. Would love to hear how things are going when you have a chance.

I'm forwarding a resume for a candidate for the Region 2 Administrator position. Ex. 6 is a great guy and I've known him a long time. Please forward this to anyone you think would be appropriate.

All the best!

Hon. Michael A. Ferguson
Senior Advisor
Federal Policy Team Leader
Member of Congress, 2001 - 2009

BakerHostetler
Washington Square
1050 Connecticut Ave, N.W. | Suite 1100
Washington, DC 20036-5304
T +1.202.861.1663
F +1.202.861.1783

mferguson@bakerlaw.com
bakerlaw.com

This email is intended only for the use of the party to which it is addressed and may contain information that is privileged, confidential, or protected by law. If you are not the intended recipient you are hereby notified that any dissemination, copying or distribution of this email or its contents is strictly prohibited. If you have received this message in error, please notify us immediately by replying to the message and deleting it from your computer.

Any tax advice in this email is for information purposes only. The content of this email is limited to the matters specifically addressed herein and may not contain a full description of all relevant facts or a complete analysis of all relevant issues or authorities.

Internet communications are not assured to be secure or clear of inaccuracies as information could be intercepted, corrupted, lost, destroyed, arrive late or incomplete, or contain viruses. Therefore, we do not accept responsibility for any errors or omissions that are present in this email, or any attachment, that have arisen as a result of e-mail transmission.

Message

From: Broome, Shannon S. [SBroome@hunton.com]
Sent: 7/17/2017 3:14:19 PM
To: Baptist, Erik [/o=ExchangeLabs/ou=Exchange Administrative Group (FYDIBOHF23SPDLT)/cn=Recipients/cn=10fc1b085ee14c6cb61db378356a1eb9-Baptist, Er]; Schwab, Justin [/o=ExchangeLabs/ou=Exchange Administrative Group (FYDIBOHF23SPDLT)/cn=Recipients/cn=eed0f609c0944cc2bbdb05df3a10aadb-Schwab, Jus]
CC: Knauss, Chuck [CKnauss@hunton.com]
Subject: RE: Available times

Can you do the 3 pm time? Chuck is traveling so that might work better on our end.

Best regards,

HUNTON & WILLIAMS

Shannon S. Broome
Partner
sbroome@hunton.com
415.975.3718 (SF)
202.955.1912 (DC)
Ex. 6

Hunton & Williams LLP
50 California Street
17th Floor
San Francisco, CA 94105
hunton.com

Check out Hunton's new Environmental and Energy Law Blog! https://www.huntonnickelreportblog.com/

This communication is confidential and is intended to be privileged pursuant to applicable law. If the reader of this message is not the intended recipient, please advise by return email immediately and then delete this message and all copies and backups thereof.

From: Baptist, Erik [mailto:baptist.erik@epa.gov]
Sent: Monday, July 17, 2017 11:13 AM
To: Schwab, Justin; Broome, Shannon S.
Cc: Knauss, Chuck
Subject: RE: Available times

Unfortunately, I have a conflict at noon. Please proceed without me.

Thanks,

Erik Baptist
Senior Deputy General Counsel
Office of General Counsel
U.S. Environmental Protection Agency
1200 Pennsyvlania Ave., NW
Washington, DC 20460
(202) 564-1689
baptist.erik@epa.gov

From: Schwab, Justin
Sent: Monday, July 17, 2017 9:53 AM
To: Broome, Shannon S. <SBroome@hunton.com>
Cc: Knauss, Chuck <CKnauss@hunton.com>; Baptist, Erik <baptist.erik@epa.gov>
Subject: Re: Available times

I will loop in Jacobi from DOJ

Sent from my iPhone

On Jul 16, 2017, at 11:21 PM, Broome, Shannon S. <SBroome@hunton.com> wrote:

> I view this as a discussion of our reconsideration petition and what the options are in light of the upcoming deadline in light of statutory language. We defer to you on whether you want to have DOJ there—we are fine either way. If you would like, we can use my dial in Ex. 6 code Ex. 6
>
> Best regards,

<image003.jpg>

Shannon S. Broome
Partner
sbroome@hunton.com
415.975.3718 (SF)
202.955.1912 (DC)
Ex. 6
Hunton & Williams LLP
50 California Street
17th Floor
San Francisco, CA 94105
hunton.com

Check out Hunton's new Environmental and Energy Law Blog! https://www.huntonnickelreportblog.com/
This communication is confidential and is intended to be privileged pursuant to applicable law. If the reader of this message is not the intended recipient, please advise by return email immediately and then delete this message and all copies and backups thereof.

From: Schwab, Justin [mailto:schwab.justin@epa.gov]
Sent: Sunday, July 16, 2017 11:16 PM
To: Broome, Shannon S.
Cc: Knauss, Chuck; Baptist, Erik
Subject: Re: Available times

I could do noon. Copying Erik in case he's interested and available. Let us know if you want DOJ and/or anyone technical.

Sent from my iPhone

On Jul 16, 2017, at 10:28 PM, Broome, Shannon S. <SBroome@hunton.com> wrote:

> Justin – thanks for the call today. We can do 11, noon, or 3 eastern tomorrow. Do any of these times work for you?

Best regards,

<image003.jpg>

Shannon S. Broome
Partner
sbroome@hunton.com
415.975.3718 (SF)
202.955.1912 (DC)
Ex. 6
Hunton & Williams LLP
50 California Street
17th Floor
San Francisco, CA 94105
hunton.com

Check out Hunton's new Environmental and Energy Law Blog! https://www.huntonnickelreportblog.com/

This communication is confidential and is intended to be privileged pursuant to applicable law. If the reader of this message is not the intended recipient, please adv
return email immediately and then delete this message and all copies and backups thereof.

Message

From: Broome, Shannon S. [SBroome@hunton.com]
Sent: 7/17/2017 3:20:39 AM
To: Schwab, Justin [/o=ExchangeLabs/ou=Exchange Administrative Group (FYDIBOHF23SPDLT)/cn=Recipients/cn=eed0f609c0944cc2bbdb05df3a10aadb-Schwab, Jus]
CC: Knauss, Chuck [CKnauss@hunton.com]; Baptist, Erik [/o=ExchangeLabs/ou=Exchange Administrative Group (FYDIBOHF23SPDLT)/cn=Recipients/cn=10fc1b085ee14c6cb61db378356a1eb9-Baptist, Er]
Subject: RE: Available times

I view this as a discussion of our reconsideration petition and what the options are in light of the upcoming deadline in light of statutory language. We defer to you on whether you want to have DOJ there—we are fine either way. If you would like, we can use my dial in Ex. 6

Best regards,

HUNTON & WILLIAMS

Shannon S. Broome
Partner
sbroome@hunton.com
415.975.3718 (SF)
202.955.1912 (DC)
Ex. 6

Hunton & Williams LLP
50 California Street
17th Floor
San Francisco, CA 94105
hunton.com

Check out Hunton's new Environmental and Energy Law Blog! https://www.huntonnickelreportblog.com/

This communication is confidential and is intended to be privileged pursuant to applicable law. If the reader of this message is not the intended recipient, please advise by return email immediately and then delete this message and all copies and backups thereof.

From: Schwab, Justin [mailto:schwab.justin@epa.gov]
Sent: Sunday, July 16, 2017 11:16 PM
To: Broome, Shannon S.
Cc: Knauss, Chuck; Baptist, Erik
Subject: Re: Available times

I could do noon. Copying Erik in case he's interested and available. Let us know if you want DOJ and/or anyone technical.

Sent from my iPhone

On Jul 16, 2017, at 10:28 PM, Broome, Shannon S. <SBroome@hunton.com> wrote:

> Justin – thanks for the call today. We can do 11, noon, or 3 eastern tomorrow. Do any of these times work for you?
>
> Best regards,

<image003.jpg>

Shannon S. Broome
Partner
sbroome@hunton.com
415.975.3718 (SF)
202.955.1912 (DC)
Ex. 6
Hunton & Williams LLP
50 California Street
17th Floor
San Francisco, CA 94105
hunton.com

Check out Hunton's new Environmental and Energy Law Blog! https://www.huntonnickelreportblog.com/

This communication is confidential and is intended to be privileged pursuant to applicable law. If the reader of this message is not the intended recipient, please advise by return email immediately and then delete this message and all copies and backups thereof.

Message

From: Fitzpatrick, Michael (GE Corporate) [michael.fitzpatrick@ge.com]
Sent: 6/19/2017 2:56:29 PM
To: Schwab, Justin [/o=ExchangeLabs/ou=Exchange Administrative Group (FYDIBOHF23SPDLT)/cn=Recipients/cn=eed0f609c0944cc2bbdb05df3a10aadb-Schwab, Jus]
Subject: Connecting

Flag: Flag for follow up

Justin –

Good to meet you at the ACUS Plenary on Friday. As we discussed, I'd like to get together with you some time to chat about regulatory policy. We obviously follow it closely at GE and I was quite involved from the OIRA end in past Administrations. We are close to each other – want to look for a time for a breakfast or quick drink at the end of the day over the next several weeks? If so, our assistants can find a time.

Best,

Michael.

Michael Fitzpatrick
Head of Regulatory Advocacy
GE Global Law & Policy

T +1 202 637 4462
Ex. 6

1299 Pennsylvania Avenue, NW
Washington, DC 20004

GE imagination at work

Message

From: Kattman, Amy [akattman@bakerlaw.com]
Sent: 4/24/2017 5:27:59 PM
To: Schwab, Justin [/o=ExchangeLabs/ou=Exchange Administrative Group (FYDIBOHF23SPDLT)/cn=Recipients/cn=eed0f609c0944cc2bbdb05df3a10aadb-Schwab, Jus]
CC: Kattman, Amy [akattman@bakerlaw.com]
Subject: BakerHostetler Alumni Network and Permission Request

Justin,

Congratulations on your new role as Deputy General Counsel at the EPA. We are always proud when someone with ties to BakerHostetler has good news. We would like to include your recent career move with your fellow alumni. The communications may include posting it to our BakerHostetler alumni website, our BakerHostetler LinkedIn Alumni Network and our alumni newsletters.

We plan to include the following information for you in the alumni directory:

Justin J. Schwab
schwab.justin@epa.gov
Deputy General Counsel
EPA

If you have changes or would like to include an address and phone number, please let me know. You may also log in to the website to update your profile. To log in to our website please use the information below:

Ex. 6

If I don't hear back from you by May 5, 2017, I'll share this news with the alumni and include your profile information in our directory. If you do not wish for us to share this information, please let me know as soon as possible.

Thanks for helping to make BakerHostetler what it is today. We look forward to *Staying connected*.

Best,
Amy

Amy Kattman
Alumni Programs Manager

BakerHostetler
312 Walnut Street | Suite 3200
Cincinnati, OH 45202-4074
T +1.513.929.3487

akattman@bakerlaw.com
bakerlaw.com

This email is intended only for the use of the party to which it is addressed and may contain information that is privileged, confidential, or protected by law. If you are not the intended recipient you are hereby notified that any dissemination, copying

or distribution of this email or its contents is strictly prohibited.
If you have received this message in error, please notify us immediately by replying to the message and deleting it from your computer.

Any tax advice in this email is for information purposes only. The content of this email is limited to the matters specifically addressed herein and may not contain a full description of all relevant facts or a complete analysis of all relevant issues or authorities.

Internet communications are not assured to be secure or clear of inaccuracies as information could be intercepted, corrupted, lost, destroyed, arrive late or incomplete, or contain viruses. Therefore, we do not accept responsibility for any errors or omissions that are present in this email, or any attachment, that have arisen as a result of e-mail transmission